United States
Environmental Protection
Agency

Office of Air Quality
Planning and Standards
Research Triangle Park, NC 27711

EPA-452/R-93-008
April 1993

Air

EPA PM-10 GUIDELINE DOCUMENT

Printed on Recycled Paper

EPA-452/R-93-008

PM-10 GUIDELINE DOCUMENT

U.S. Environmental Protection Agency

U.S. Environmental Protection Agency
Office of Air and Radiation
Office of Air Quality Planning and Standards
Research Triangle Park, North Carolina 27711

April 1993

TABLE OF CONTENTS

Section			Page
List of References			viii
List of Tables			x
1.0	Introduction		1-1
	1.1	Overview	1-1
	1.2	Provisions for Updating the Guideline	1-3
	1.3	Additional Information Sources	1-3
2.0	State Implementation Plans		2-1
	2.1	General	2-1
	2.2	General SIP Approach	2-4
	2.3	Statutory Requirements for PM-10 SIP's	2-7
3.0	Determining Air Quality Status		3-1
	3.1	Section 107 Designations	3-1
		3.1.1 General	3-1
		3.1.2 Designating Areas as Nonattainment	3-1
		3.1.3 Area Boundaries	3-2
		3.1.4 Redesignating Areas to Attainment	3-2
	3.2	Ambient Air	3-13
		3.2.1 General	3-13
		3.2.2 Location Aspects	3-13
		3.2.3 Time Aspects	3-14
		3.2.4 Public Access	3-14
		3.2.5 PSD Considerations	3-14
		3.2.6 Land Acquisition	3-15
		3.2.7 Monitor Siting Location Considerations	3-15
4.0	Emission Inventories		4-1
5.0	Ambient Air Quality Monitoring and Data Usage		5-1
	5.1	General	5-1
	5.2	Quality Assurance	5-5
	5.3	Ambient Monitoring Methodology	5-8
		5.3.1 General	5-8
		5.3.2 Sampling Schedule	5-9
		5.3.3 Data Completeness	5-10
	5.4	Network Design	5-13
	5.5	Probe Siting Criteria	5-19

TABLE OF CONTENTS (Continued)

Section **Page**

5.6 Episode Monitoring 5-22
5.7 Ambient Air Quality Data Reporting 5-24
5.7.1 General 5-24
5.7.2 Air Pollution Index 5-25
5.7.3 Exceptional Events 5-25

6.0 Air Quality Modeling 6-1
6.1 General 6-1
6.2 Guidance on Air Quality Models 6-4
6.3 Model Selection 6-7
6.4 Meteorological Input 6-11
6.5 Source Input 6-15
6.5.1 General 6-15
6.5.2 Allowable Versus Actual Emissions 6-15
6.5.3 Area Sources 6-16
6.5.4 Background Concentration 6-16
6.5.5 Stack Height Input to Air Quality Modeling 6-17
6.5.6 Stack Downwash and Building Wake Effects 6-18
6.6 Receptor Analysis 6-22
6.7 Other Model Requirements 6-24
6.7.1 Stagnation 6-24
6.7.2 Fumigation 6-24
6.7.3 Long Range Transport 6-25
6.7.4 Settling and Deposition 6-25
6.7.5 Model Limitations 6-25
6.8 Receptor Modeling 6-28

7.0 Stack Height Regulations 7-1
7.1 General Regulations 7-1
7.2 Good Engineering Practice Stack Height 7-3
7.2.1 General 7-3
7.2.2 Definition of "Nearby" for GEP 7-4
7.2.3 Definition of "Excessive Concentration" 7-4
7.3 Dispersion Techniques 7-6
7.3.1 General 7-6
7.3.2 Prohibitions 7-6
7.3.3 Exceptions 7-6
7.4 Remanded Regulations 7-8

TABLE OF CONTENTS (Continued)

Section **Pag**

7.5 Specific Stack Height Policies 7-1
7.5.1 Definition of "In Existence" 7-1
7.5.2 Tie-ins to Existing Stacks 7-1
7.6 Demonstrations by Fluid Modeling, Field Studies or Nuisance 7-1
7.6.1 Applicability 7-1
7.6.2 Field Studies 7-1
7.6.3 Fluid Modeling 7-1
7.6.4 Emission Rate for Physical Demonstrations 7-1
7.6.5 Not in Ambient Air 7-1
7.6.6 Additional Guidance 7-1
7.7 Merged Stacks 7-2
7.7.1 General 7-2
7.7.2 Exceptions 7-2
7.8 Stack Height Negative Declarations 7-2
7.8.1 General 7-2
7.8.2 Information Needed 7-2
7.8.3 Modeling Needed 7-2

8.0 Control Strategies 8-1
8.1 General 8-1
8.2 Control Strategy Transition 8-3
8.3 Establishing Emission Limitations 8-5
8.3.1 General 8-5
8.3.2 Design Concentrations 8-5
8.3.3 Averaging Periods 8-6
8.3.4 Compliance Methods 8-7
8.4 Control Methods for PM-10 Sources 8-10
8.4.1 RACM/BACM Issuance 8-10
8.4.2 RACM/BACM SIP Requirement 8-10
8.4.3 Determining RACM/RACT 8-10
8.4.4 PM-10 Precursors 8-11
8.4.5 Condensible PM-10 8-13
8.4.6 Control Measures Available for Fugitive Dust RACM 8-13
8.4.7 Control Measures Available for Residential Wood Combustion RACM 8-14
8.4.8 Control Measures Available for Prescribed Burning RACM 8-16
8.4.9 RACT Determination for Stationary Sources 8-17

TABLE OF CONTENTS (Continued)

Section			Page
9.0	General Provisions		9-1
	9.1	General	9-1
	9.2	Clean Air Act Requirements: Time Frames and PM-10 NAAQS SIP Requirements	9-3
		9.2.1 Designations	9-3
		9.2.2 Classification	9-3
		9.2.3 Attainment Dates	9-4
		9.2.4 Plan Submission	9-5
	9.3	Current NAAQS and PSD Program	9-13
		9.3.1 National Ambient Air Quality Standards	9-13
		9.3.2 Prevention of Significant Deterioration Program	9-13
	9.4	SIP Revisions	9-16
		9.4.1 General	9-16
		9.4.2 SIP Completeness	9-16
		9.4.3 Approval Options	9-17
		9.4.4 Grandfathering	9-18
		9.4.5 SIP Relaxations	9-19
		9.4.6 SIP Tightening	9-19
	9.5	Sanctions and FIP Requirements	9-26
		9.5.1 Actions Triggering Sanctions and FIP Requirements	9-26
		9.5.2 Sanction and FIP Clocks	9-26
		9.5.3 Available Sanctions	9-27
	9.6	Interim Control Strategies	9-31
	9.7	SIP Calls	9-33
10.0	Permit Requirements		10-1
	10.1	General	10-1
	10.2	Nonattainment Areas	10-3
		10.2.1 Applicability	10-3
		10.2.2 Control Technology Requirements	10-3
		10.2.3 Emission Offsets	10-3
		10.2.4 Net Air Quality Benefit	10-4
		10.2.5 Other Requirements	10-4
		10.2.6 NSR Transition	10-4
	10.3	PSD Areas	10-11
		10.3.1 Applicability	10-11
		10.3.2 Control Technology Requirements	10-11
		10.3.3 Air Quality Analysis	10-11
		10.3.4 Other Impacts	10-12

TABLE OF CONTENTS (Continued)

Section			Pa
		10.3.5 Class I Areas	10-1
	10.4	SIP Permit Requirements	10-1
	10.5	Visibility	10-1
	10.6	Emissions Trading	10-1
		10.6.1 General Policy Aspects	10-1
		10.6.2 Bubbling	10-1
		10.6.3 Netting	10-1
		10.6.4 Offsets	10-1
		10.6.5 Banking	10-1
		10.6.6 Emission Reduction Credits	10-1
	10.7	PM-10 Specific Policy Aspects	10-2
11.0		Compliance and Enforcement	11-1
	11.1	General	11-1
	11.2	Enforceability Criteria	11-1
	11.3	Continuous Compliance	11-5
		11.3.1 General	11-5
		11.3.2 Enforcement Discretion Approach	11-5
		11.3.3 Malfunctions and Unusual Start-up or Shut-down	11-6
	11.4	Compliance Monitoring	11-8
		11.4.1 Compliance Monitoring Strategy	11-8
		11.4.2 Compliance Monitoring Requirements	11-8
		11.4.3 State Inspection Plan Submittal	11-9
		11.4.4 Negotiated Inspection Plans	11-10
	11.5	Compliance Plans/Schedules	11-13
	11.6	Compliance Testing Methods	11-13
12.0		New Source Performance Standards	12-1
	12.1	General	12-1
	12.2	NSPS Provisions for Particulate Matter	12-4
		12.2.1 Subpart D--Fossil-Fuel Fired Steam Generators	12-4
		12.2.2 Subpart Da--Electric Utility Steam Generating Units	12-4
		12.2.3 Subpart Db--Industrial-Commercial-Institutional Steam Generating Units	12-5
		12.2.4 Subpart J--Petroleum Refineries	12-6
		12.2.5 Subpart L--Secondary Lead Smelters	12-6
		12.2.6 Subpart P--Primary Copper Smelters	12-6
		12.2.7 Subpart Q--Primary Zinc Smelters	12-7
		12.2.8 Subpart R--Primary Lead Smelters	12-7

TABLE OF CONTENTS (Continued)

Section **Page**

12.2.9 Subpart AAA--New Residential Wood Heaters 12-8
12.3 Modification/Reconstruction Provisions 12-10

Appendix A. Referenced Materials A-1

Appendix B. Compendium of Information Sources on PM-10 Policy and Guidance B-1

LIST OF REFERENCES

Subject	Pa
References for Section 2.1	2-
References for Section 2.2	2-
References for Section 2.3	2-
References for Section 3.1	3-
References for Section 3.2	3-1
References for Section 5.1	5-
References for Section 5.2	5-
References for Section 5.3	5-1
References for Section 5.4	5-1
References for Section 5.5	5-2
References for Section 5.6	5-2
References for Section 5.7	5-2
References for Section 6.1	6-
References for Section 6.2	6-
References for Section 6.3	6-
References for Section 6.4	6-1
References for Section 6.5	6-1
References for Section 6.6	6-2
References for Section 6.7	6-2
References for Section 6.8	6-31
References for Section 7.1	7-2
References for Section 7.2	7-5
References for Section 7.3	7-7
References for Section 7.4	7-9
References for Section 7.5	7-12
References for Section 7.6	7-16
References for Section 7.7	7-21
References for Section 7.8	7-25
References for Section 8.1	8-2
References for Section 8.2	8-4
References for Section 8.3	8-8
References for Section 8.4	8-19
References for Section 9.1	9-2
References for Section 9.2	9-11
References for Section 9.3	9-15
References for Section 9.4	9-20
References for Section 9.5	9-28
References for Section 9.6	9-32
References for Section 10.1	10-2
References for Section 10.2	10-7

LIST OF REFERENCES (Continued)

Subject	Page
References for Section 10.3	10-14
References for Section 10.4	10-16
References for Section 10.6	10-20
References for Section 10.7	10-23
References for Section 11.2	11-4
References for Section 11.3	11-7
References for Section 11.4	11-11
References for Section 11.6	11-15
References for Section 12.1	12-3
References for Section 12.2	12-9
References for Section 12.3	12-11

LIST OF TABLES

Number		Pag
5-1	Manual and Automated Methods Approved as of February 14, 1992	5-
9-1	Current PSD Increments for PM-10 Measured as TSP	9-1
12-1	NSPS Particulate Matter Source Categories	12-

1.0 INTRODUCTION

1.1 OVERVIEW

This PM-10 (particles with an aerodynamic diameter less than or equal to a nominal 10 micrometers) guideline represents a compilation of currently available policy and guidance for PM-10 programs and does not present any new policy or guidance. The guideline is organized into 12 chapters as follows:

Chapter 1	Introduction
Chapter 2	State Implementation Plans
Chapter 3	Determining Air Quality Status
Chapter 4	Emission Inventories
Chapter 5	Ambient Air Quality Monitoring and Data Usage
Chapter 6	Air Quality Modeling
Chapter 7	Stack Height Regulations
Chapter 8	Control Strategies
Chapter 9	General Provisions
Chapter 10	Permit Requirements
Chapter 11	Compliance and Enforcement
Chapter 12	New Source Performance Standards

Each chapter summarizes relevant policy and guidance and provides detailed references to guide the user to more complete sources. References include statutory and regulatory sources [Clean Air Act and Code of Federal Regulations (CFR)], Federal Register notices, U.S. Environmental Protection Agency (EPA) guideline documents, EPA policy, questions and answers (Q & A's), and guidance memoranda. Where appropriate, quotations are provided from the applicable reference materials to be used as a quick reference. Citations to the CFR should be checked regularly as it is updated annually, and the updated versions may not always be reflected in this document.

This guideline is intended to provide a guide to policy and guidance in effect at the time of its preparation. **The PM-10 guideline should not be cited in regulatory actions because any regulatory decisions should be based on the original sources, rather than**

the summaries in each chapter. In addition, in some instances, it is possible that only pa of a document still represents current EPA policy or guidance. Therefore, before citing a document section not excerpted from the PM-10 policy and guidance in the references at th end of each chapter, please consult EPA to assure the information is still current.

It is particularly important to consult with EPA because significant changes were ma to the Clean Air Act (Act) in the 1990 Amendments. Section 193 of the Act provides that regulations and guidance issued by EPA prior to the 1990 Amendments remain in effect, except to the extent inconsistent with the Act or revised by EPA. EPA has not undertaken a systematic review of all of its previously-issued regulations and guidance to assess its consistency with the revised Act.

However, EPA has issued significant guidance since the 1990 revisions to the Act. Thus, the key source to focus on in determining the State implementation plan (SIP) requirements applicable to PM-10 nonattainment areas is, of course, the statute itself. Part D, Title I of the Act contains the statutory requirements applicable to PM-10 nonattainment areas. Further, important recently-issued guidance includes the *General Preamble* cited in section 1.3 below.

Finally, the underlying guidance and memoranda summarized in this document describe EPA's non-binding interpretations of certain SIP and SIP-related requirements. Therefore, for example, these interpretations will be given binding effect for a SIP submitted for a particular area only after final EPA rulemaking action on the submittal. During the course of this rulemaking action the public will be afforded an opportunity to comment on the application of any guidance or memoranda to the particular area in question. Thus, EPA will consider the factual circumstances associated with a particular submittal and the submissions made by any persons before giving the preliminary interpretations expressed in guidance and memoranda binding legal effect. Further, use of words like "must", "shall" and "required" in this document or the underlying documents should not be treated as having binding legal effect unless the words are employed to describe or recite an already-adopted statutory or regulatory requirement.

Except where noted, Appendix A to this guideline contains copies of all the memoranda, Federal Register notices, and Q & A's cited in the reference sections arranged in chronological order (lengthier documents, such as guidance documents, guidelines, manuals,

etc., are not included in Appendix A, but can be obtained from EPA or elsewhere). Appendix B contains a compendium of sources of information on PM-10 policy and guidance. It consists of a list of PM-10 policy and guidance and a table indicating what subjects the policy and guidance covers. The list includes items that are not specifically referenced in the chapters of this guideline. These materials are intended to supplement the materials referenced in this guideline with additional information as needed. The table indicates which policy and guidance items are referenced in this document and which are not.

1.2 PROVISIONS FOR UPDATING THE GUIDELINE

The guideline will be updated periodically by adding new pages or replacing existing pages. Revised pages will be dated and copies will be provided by the EPA's Office of Air Quality Planning and Standards (OAQPS) to the EPA Regional Office PM-10 contacts. Citations of the CFR are to the most current version at the time of preparation of this guideline. Users of the guideline should refer to later versions of the CFR since it is updated on a regular basis. The CFR is published annually including changes for that year. However, new/revised regulations can be promulgated at any time and States should be aware of those prior to publication in the bound CFR.

1.3 ADDITIONAL INFORMATION SOURCES

This guideline is intended to be used in conjunction with other guidance documents and policy statements including the following:

- General Preamble (see 57 FR 13598, April 16, 1992 and 57 FR 18070, April 29, 1992).
- Air Programs Policy and Guidance Notebook. Contains many references cited in this guideline which are cross referenced by PN number from the notebook.
- New Source Review Workshop Manual. Contains comprehensive New Source Review guidance.
- New Source Review (NSR)/Prevention of Significant Deterioration (PSD) Notebook: contains comprehensive NSR/PSD guidance.

- Clean Air Act Compliance/Enforcement Policy Compendium: contains comprehensi compliance guidance.

- Guideline for Review of State implementation plan (SIP) Revisions by EPA Regiona Offices: contains references on SIP processing.

- Processing procedures for SIP revisions for Part 52, Part 62-III(d) Plans, and Part 82 Redesignations.

- Guideline on Air Quality Models: contains comprehensive modeling guidance.

Where existing guidance is insufficient, State and local agencies should seek clarification from their Regional Office contact. Regional Offices are encouraged to solicit additional guidance when needed from EPA Headquarters personnel. Contact the SO_2/Particulate Matter Programs Branch, AQMD, OAQPS at 919/541-5628.

2.0 STATE IMPLEMENTATION PLANS

2.1 GENERAL

Section 101(b)(1) of the Act as amended in 1990 notes that one of the purposes of the Act is "to protect and enhance the quality of the Nation's air resources so as to promote the public health and welfare and the productive capacity of its population." To this end, the amended Act established provisions for setting national ambient air quality standards (NAAQS) for certain air pollutants, including PM-10. NAAQS for PM-10 were promulgated in 1987.

The amended Act establishes the system of State implementation plans as the method for ensuring that NAAQS are met (section 110). Specifically, the amended Act states that, after promulgation of NAAQS, each State must adopt and submit to EPA a plan which provides for implementation, maintenance, and enforcement of the NAAQS.

According to section 107(d)(1) and (4), areas are to be designated as attainment, nonattainment, or unclassifiable with respect to the NAAQS. When any area's designation changes to nonattainment, the State must prepare a revision to the SIP pursuant to section 172 showing how the area will be brought into attainment.

Prior to 1990, PM-10 areas were classified in terms of the probability of violating the NAAQS. As such, PM-10 areas were divided into three groupings identified as Group I, Group II or Group III areas.[1] Group I areas were areas where the probability of violation of the PM-10 NAAQS was 95 percent or greater. Group II areas were areas where the probability of violation was between 20 and 95 percent. In Group III areas, the probability of violation was less than 20 percent.

The *General Preamble* for the Implementation of Title I of the amended Act states that "on the date of enactment of the 1990 Act, PM-10 areas meeting the qualifications of section 107(d)(4)(B) of the amended act were designated nonattainment by operation of law. These areas included all former Group I areas identified in 52 FR 29383 and clarified in 55 FR 45799 and any other areas violating the PM-10 NAAQS prior to January 1, 1989. All other areas were designated unclassifiable."[2] The *General Preamble* also states that "once an

area is designated nonattainment, section 188 of the amended Act outlines the process for classification of the area and establishes the area's attainment date."[3] A detailed discussion of area designation and classification and attainment dates is presented in Section 9.2 of this guideline.

REFERENCES FOR SECTION 2.1

1. 52 Federal Register 29,383-85 (August 7, 1987), PM-10 Group I and Group II Areas; List of PM-10 Group I and Group II Areas.

2. 57 Federal Register 13,537 (April 16, 1992), General Preamble for the Implementation of Title I of the Clean Air Act Amendments of 1990; Proposed Rule; SIP Requirements; Particulate Matter; Statutory Background; Designations.

3. 57 Federal Register 13,537 (April 16, 1992), General Preamble for the Implementation of Title I of the Clean Air Act Amendments of 1990; Proposed Rule; SIP Requirements; Particulate Matter; Statutory Background; Classifications and Attainment Dates.

2.2 GENERAL SIP APPROACH

The general steps for developing a SIP or revising a SIP for a Part D nonattainment area are outlined below.

1. Determine the existing PM-10 concentrations in the ambient air to establish the initial (baseline) air quality. Baseline air quality is determined by using measured air quality data. These baseline air quality data determine the attainment status for an area with regard to PM-10.

2. Determine whether an area is meeting the NAAQS. The 24-hour NAAQS for PM-10 is 150 $\mu g/m^3$, 24-hour average concentration. The 24-hour NAAQS is considered violated when the expected number of days per calendar year having a 24-hour average concentration above 150 $\mu g/m^3$ is greater than one. The annual NAAQS for PM-10 is 50 $\mu g/m^3$, arithmetic mean. The annual PM-10 NAAQS is violated when the expected annual arithmetic mean concentration is greater than 50 $\mu g/m^3$.[1]

   If an area is in violation of the NAAQS, EPA will designate the area as nonattainment. The State will then be required to submit a SIP addressing how the nonattainment area will be brought into compliance with the NAAQS. The amount of time which the State is given to submit the SIP is dependent on whether an area is classified as moderate or serious.

3. Prepare emissions inventories. Emission inventories are needed to determine which industrial sectors or area sources will cause an area to achieve or exceed the ambient standards in future years. The baseline inventory estimates current emissions. A baseline projection estimates future emissions given current controls by taking into account expected emissions growth. Control strategy projections estimate future emissions considering modified or additional control regulations which affect baseline projections. Development of emissions inventories is addressed in Section 4 of this guideline.

4. Evaluate ambient air quality. Developing an implementation plan requires a suitable method for relating pollutant emissions to ambient air quality. The most commonly used method is atmospheric dispersion modeling. When dispersion models are applied to projected emissions, projected air quality can be determined and used to demonstrate attainment of the standard by the attainment deadline.

5. Develop control strategies that ensure attainment and maintenance of the NAAQS. Specific control strategies needed to attain the NAAQS are based on projected controlled emissions and the associated ambient air quality. Control strategies are addressed in Section 8 of this document.

6. Document the plan for attainment in the SIP. Requirements for content of the SIP are addressed in Section 2.3 of this document.

7. Perform post-SIP air quality monitoring to track air quality maintenance and progress toward attainment.

REFERENCES FOR SECTION 2.2

1. U.S. Environmental Protection Agency. *Code of Federal Regulations.* Title 40, Chapter I. Subchapter C, Part 50.6. July 1, 1991.

2.3 STATUTORY REQUIREMENTS FOR PM-10 SIP's

Subsections (A) through (M) of section 110(a)(2) of the amended Act set forth the elements that a SIP must contain in order to be fully approved.[1] Under section 110(a)(2), SIP's must include,among other things, the following:

- Enforceable emissions limitations
- Ambient air quality monitoring
- Provisions for enforcement of control measures and emissions limitations
- Provisions to prohibit sources from significantly affecting NAAQs attainment or maintenance, or conformance with PSD or visibility rules in a neighboring State
- Assurance of adequate personnel, funding and authority to carry out the SIP
- Requirements for emissions monitoring and reporting
- Provisions for emergency powers and contingency plans
- Provisions for plan revisions, as necessary
- Provisions for SIP revisions to meet applicable nonattainment area requirements
- Provisions for necessary air quality modeling
- Provisions to collect permit fees required under the Act from major stationary sources adequate to recover the costs of reviewing and acting upon permit applications and administering the provisions of the permit
- Provisions for participation of local political subdivisions affected by the plan

PM-10 nonattainment area SIP's must meet the following section 172(c) requirements applicable to nonattainment area SIP's generally:

- Implementation of all reasonably available control measures (RACM) (including reductions in emissions from existing sources in the area obtainable by adopting, at a minimum, reasonably available control technology) and attainment of the NAAQS.
- Demonstration of reasonable further progress (RFP) toward attaining the NAAQS by the applicable date

- A comprehensive, accurate, and current inventory of actual emissions from all sources of the relevant pollutant

- Identification and quantification of PM-10 emissions from the construction or operation of major new or modified stationary sources. The SIP must demonstrate that these emissions will be consistent with the achievement of RFP and will not interfere with attainment of the NAAQS

- Require permits for the construction and operation of major new or modified stationary sources in the nonattainment area

- Provisions for appropriate measures to ensure attainment by applicable date, including enforceable emission limits and other necessary control measures, as well as schedules for compliance

- Compliance with applicable provisions of section 110(a)(2)

- Provisions for the implementation of specific contingency measures to be taken if the nonattainment area fails to make RFP or to meet the NAAQS by the applicable date

PM-10 nonattainment area SIP's must meet the following Part D, Subpart 4 PM-10 specific requirements:

- Provisions for implementation of RACM for moderate areas according to a specific schedule.

- Provisions for implementation of best available control measures (BACM) for serious areas according to a specific schedule.

- An attainment demonstration (including air quality modeling).

- Establishment of a permit program providing that permits meeting the requirements of section 173 are required for the construction and operation of major new or modified PM-10 stationary sources.

- The attainment demonstration plan revision must include quantitative milestones to be achieved every 3 years until the area is redesignated attainment and which demonstrate RFP toward attainment by the applicable date.

REFERENCES FOR SECTION 2.3

1. 57 Federal Register 13,556 (April 16, 1992), General Preamble for the Implementation of Title I of the Clean Air Act Amendments of 1990; Proposed Rule; SIP Requirements; General; Part D, Subpart 1/Section 110(to the Extent Not Covered Under Pollutant-Specific).

3.0 DETERMINING AIR QUALITY STATUS

3.1 SECTION 107 DESIGNATIONS

3.1.1 General

According to the General Preamble for the Implementation of Title I of the Clean Air Act Amendments of 1990, on the date of enactment of the amended Act (November 15, 1990), PM-10 areas meeting the qualifications of section 107(d)(4)(B) were designated nonattainment by operation of law.[1] These areas included all former Group I areas and any other areas violating the PM-10 NAAQS prior to January 1, 1989. All other areas were designated unclassifiable. A Federal Register notice announcing all of the areas designated nonattainment for PM-10 at enactment of the amended Act and classified as moderate was published in 56 FR 11101 (March 15, 1991) and corrected in 56 FR 37654 (August 8, 1991).[1]

Section 188 of the amended Act outlines the process for classification of nonattainment areas and establishes area-specific attainment dates.[2] At the time of designation, and in accordance with section 188(a), all PM-10 nonattainment areas are initially classified as moderate. In accordance with section 188(b), a moderate area can be reclassified as serious prior to the passage of the applicable attainment date if EPA determines the area cannot "practicably" attain the PM-10 NAAQS by that date. For the initial moderate PM-10 nonattainment areas, the amended Act specifies certain dates by which EPA must propose to reclassify appropriate moderate areas as serious and take final action. In addition, a moderate area can be reclassified as serious subsequent to the passage of the applicable attainment date if EPA determines the area has failed to attain by that date.[2]

3.1.2 Designating Areas as Nonattainment

The amended Act, in accordance with section 107(d)(3), authorizes EPA to promulgate the designation of new areas as nonattainment for PM-10 on the basis of air quality data, planning and control considerations, or any other air quality-related consideration that the Administrator deems appropriate.[3] As part of the designation process, EPA notifies the governors of those States with areas that EPA believes should be redesignated as

nonattainment. Governors of affected States must then submit to EPA the designation they consider appropriate for each area in question within 120 days. No later than 120 days after Governor's response, if any, EPA must promulgate those redesignations which EPA deems necessary and appropriate.[3] On April 22, 1991 EPA announced in 56 FR 16274 that it had initiated the redesignation process for 16 areas. Pursuant to section 189(a)(2)(B) of the amended Act, States must submit PM-10 SIP's for these areas to EPA within 18 months after EPA promulgates the nonattainment designation.[3]

3.1.3 Area Boundaries

Section 107 nonattainment areas for PM-10 must have clearly identifiable political or physical boundaries and are generally described by EPA as a city, county, or township.[4] Generally, when EPA lists municipal boundaries or other boundaries identifying a perimeter, all of the area within those boundaries is part of the nonattainment area unless otherwise specified. In the process of monitoring and modeling PM-10 concentrations and determining the extent of sources of PM-10 emissions that impact the areas, the States will better identify the boundaries of the area that is or may be violating the standards.[5] Guidance was provided in the *PM-10 SIP Development Guideline* on how to further define the extent of areas violating the PM-10 standards in the process of developing PM-10 SIP's. On October 31, 1990, EPA clarified the description of certain Group I and Group II areas of concern listed in the original August 7, 1987 notice.[6] Further corrections for the initial moderate areas were published on August 8, 1991 in response to comments from States.[7]

3.1.4 Redesignating Areas to Attainment

The following is an expanded discussion of the criteria which must be met before an area can be redesignated from nonattainment to attainment. It is suggested that the reader refer to the memorandum dated September 4, 1992 from John Calcagni to the Regional Air Division Directors entitled *Procedures for Processing Requests to Redesignate Areas to Attainment* for an extended discussion of these criteria.[8]

- Attainment of the NAAQS:

The State must show that the area is attaining the PM-10 NAAQS. There are two components involved in making this demonstration which should be considered interdependently. The first component relies on air quality data. The showing of attainment for PM-10 through air quality data must rely on 3 complete, consecutive calendar years of quality-assured air quality monitoring data, collected in accordance with 40 CFR 50, Appendix K.[9] According to 40 CFR 50.6, the area may be considered as attaining the primary and secondary 24-hour NAAQS (150 $\mu g/m^3$) when the expected number of exceedances per year at each monitoring site is less than or equal to one. In the simplest case, the expected number of exceedances is determined by recording the number of exceedances in each calendar year, and then averaging over the past 3 years. The annual primary and secondary PM-10 NAAQS are attained when the expected annual arithmetic mean PM-10 concentration is less than or equal to the level of the standard (50 $\mu g/m^3$). In the simplest case, the expected annual arithmetic mean is determined by averaging the annual means for the past 3 calendar years. Situations in which 3 years of data are not available and possible adjustments for unusual events or trends are necessary are discussed in Sections 2.3 and 2.4 of 40 CFR 50, Appendix K.[10]

The second component relies on supplemental air quality modeling. Modeling may be necessary to determine the representativeness of the monitored data. For PM-10, dispersion modeling will generally be necessary to evaluate comprehensively a source's impacts and to determine the areas of expected high concentrations based upon current conditions. Regions should consult with OAQPS for further guidance addressing the need for modeling in specific circumstances.[11]

- Approved 110(k) SIP for the area

The SIP for the area must be fully approved under section 110(k) of the Act and must satisfy all requirements that apply to the area. "An area cannot be redesignated if a required element of its plan is the subject of a disapproval; a finding of failure to submit or to implement the SIP; or partial, conditional, or limited approval. However, this does not mean that earlier issues with regard to the SIP will be reopened."[12]

- Permanent and enforceable improvement in air quality

  The State must be able to reasonably attribute the improvement in air quality to emission reductions which are permanent and enforceable. In making this showing, the State should estimate the percent reduction achieved from Federal measures.[13]

- Section 110 and Part D Requirements

  A State must meet all requirements of section 110 and Title I, Part D of the Act that were applicable prior to submittal of the complete redesignation request. Section 110(a)(2) contains general requirements for nonattainment SIP's. Part D consists of general requirements applicable to all areas designated nonattainment and specific requirements applicable to certain NAAQS including PM-10.[14]

- Fully approved maintenance plan

  Before an area can be redesignated to attainment, EPA must approve a maintenance plan which meets the requirements of section 175A.[15] The maintenance plan will constitute a SIP revision and must provide for maintenance of the PM-10 NAAQS in the area for at least 10 years after redesignation.[16] In addition, the maintenance plan shall contain such contingency measures necessary to ensure prompt correction of any violation of the PM-10 NAAQS. At a minimum, these measures must include a requirement that the State will implement all measures contained in the nonattainment SIP prior to redesignation.[17]

The following is a list of the provisions that should be included in a maintenance plan:

Attainment inventory: The State should develop an attainment emissions inventory to identify the level of emissions in the area which is sufficient to attain the PM-10 NAAQS.[18]

Maintenance demonstration: A State may generally demonstrate maintenance of the NAAQS by either showing that future emissions of PM-10 will not exceed the level of the attainment inventory, or by modeling to show that the future mix of sources

and emission rates will not cause a violation of the PM-10 NAAQS.[19] In either case, the State should project emissions for the 10-year period following redesignation.[20]

Monitoring network: Once an area has been redesignated, the State should continue to operate an appropriate air quality monitoring network to verify the attainment status of the area.[21]

Verification of continued attainment: Each State should ensure that it has the legal authority to implement and enforce all measures necessary to attain and to maintain the PM-10 NAAQS. The State submittal should indicate how the State will track the progress of the maintenance plan.[22]

Contingency plan: The maintenance plan must contain contingency provisions that will promptly correct any violation of the PM-10 NAAQS that occurs after redesignation. For the purposes of section 175A, a State is not required to have fully adopted contingency measures that will take effect without further action by the State in order for the maintenance plan to be approved. However, the contingency plan is considered to be an enforceable part of the SIP and should ensure that contingency measures are adopted expediently once they are triggered. The plan should clearly identify the measures to be adopted, a schedule and procedure for adoption and implementation, and a specific time limit for action by the State.[23] The EPA will review what constitutes a contingency plan on a case-by-case basis. At a minimum, it must require that the State will implement all measures contained in the Part D nonattainment plan for the area prior to redesignation. This language suggests that a State may submit a SIP revision at the time of its redesignation request to remove or reduce the stringency of control measures. The EPA can approve such a revision if it provides for compensating equivalent reductions. Alternatively, a State might be able to demonstrate that the measures are not necessary for maintenance of its standard.[24]

REFERENCES FOR SECTION 3.1

1. 57 Federal Register 13,537 (April 16, 1992), General Preamble for the Implementation of Title I of the Clean Air Act Amendments of 1990; Proposed Rule; SIP Requirements; Particulate Matter; Statutory Background; Designations.

2. 57 Federal Register 13,537 (April 16, 1992), General Preamble for the Implementation of Title I of the Clean Air Act Amendments of 1990; Proposed Rule; SIP Requirements; Particulate Matter; Statutory Background; Classifications and Attainment Dates.

3. 56 Federal Register 16,274-77 (April 22, 1991), Preparation, Adoption, and Submittal of State Implementation Plans; PM-10, Sulfur Dioxide, and Lead Nonattainment and Unclassifiable Area Designations; Background for PM-10.

4. "Using the above criteria, boundaries of future nonattainment areas should be specified using clearly identifiable political or physical boundaries. This could include city, county, or State boundaries or rivers and mountain ranges. However, the boundaries should encompass the entire area to which a control strategy is expected to apply. The default area for PM-10 designations are the county boundaries." Memorandum from Seitz, John S., Director, OAQPS, to Addressees. Nonattainment Designations and Classifications. November 14, 1990.

5. 52 Federal Register 29,383-85 (August 7, 1987), PM-10 Group I and Group II Areas.

6. 55 Federal Register 45,799-803 (October 31, 1990), Preparation, Adoption, and Submittal of State Implementation Plans; Corrections to PM-10 Areas of Concern.

7. 56 Federal Register 37,654-65 (August 8, 1991), Designations and Classifications for Initial PM-10 Nonattainment Areas.

8. Memorandum from Calcagni, John, Director, Air Quality Management Division, OAQPS, U.S. EPA, Research Triangle Park, NC, to Director, Air, Pesticides and Toxics Management Division, Regions I and IV; Director, Air and Waste Management Division, Region II; Director, Air, Radiation and Toxics Division, Region III; Director, Air and Radiation Division, Region V; Director, Air, Pesticides, and Toxics Division, Region VI; and Director, Air and Toxics Division, Regions VII, VIII, IX, and X. Procedures for Processing Requests to Redesignate Areas to Attainment. September 4, 1992.

9. "The State must show that the area is attaining the applicable NAAQS. There are two components involved in making this demonstration which should be considered interdependently. The first component relies upon ambient air quality data. The data that are used to demonstrate attainment should be the product of ambient monitoring

that is representative of the area of highest concentration. These monitors should remain at the same location for the duration of the monitoring period required for demonstrating attainment . . . For PM-10, the area may be considered attaining the NAAQS if the number of expected exceedances per year, according to 40 CFR 50.6, is less than or equal to 1.0. In making this showing, both PM-10 and O_3 must rely on 3 complete, consecutive calendar years of quality-assured air quality monitoring data, collected in accordance with 40 CFR 50, Appendices H and K." Memorandum from Calcagni, John, Director, Air Quality Management Division, OAQPS, U.S. EPA, Research Triangle Park, NC, to: Director, Air, Pesticides and Toxics Management Division, Regions I and IV; Director, Air and Waste Management Division, Region II; Director, Air, Radiation and Toxics Division, Region III; Director, Air and Radiation Division, Region V; Director, Air, Pesticides, and Toxics Division, Region VI; and Director, Air and Toxics Division, Regions VII, VIII, IX, and X. Procedures for Processing Requests to Redesignate Areas to Attainment. September 4, 1992.

10. U.S. Environmental Protection Agency, Code of Federal Regulations, Title 40, Chapter I, Subchapter C, Part 50, Appendix K. July 1, 1991.

11. "The second component relies on supplemental EPA-approved air quality modeling . . . Modeling may be necessary to determine the representativeness of the monitored data . . . When dealing with SO_2, Pb, PM-10 (except for a limited number of initial moderate nonattainment areas), . . . dispersion modeling will generally be necessary to evaluate comprehensively sources' impacts and to determine the areas of expected high concentrations based upon current conditions. Areas which were designated nonattainment based on modeling will generally not be redesignated to attainment unless an acceptable modeling analysis indicates attainment. Regions should consult with OAQPS for further guidance addressing the need for modeling in specific circumstances." Memorandum from Calcagni, John, Director, Air Quality Management Division, OAQPS, U.S. EPA, Research Triangle Park, NC, to: Director, Air, Pesticides and Toxics Management Division, Regions I and IV; Director, Air and Waste Management Division, Region II; Director, Air, Radiation and Toxics Division, Region III; Director, Air and Radiation Division, Region V; Director, Air, Pesticides, and Toxics Division, Region VI; and Director, Air and Toxics Division, Regions VII, VIII, IX, and X. Procedures for Processing Requests to Redesignate Areas to Attainment. September 4, 1992.

12. "The SIP for the area must be fully approved under section 110(k), and must satisfy all requirements that apply to the area. It should be noted that approval action on SIP elements and the redesignation request may occur simultaneously. An area cannot be redesignated if a required element of its plan is the subject of a disapproval; a finding of failure to submit or to implement the SIP; or partial, conditional, or limited approval. However, this does not mean that earlier issues with regard to the SIP will be reopened. Regions should not reconsider those things that have already been approved and for which the Clean Air Act Amendments did not alter what is required. In contrast, to the extent the amendments add a requirement or alter an existing requirement so that it adds something more, Regions should consider those issues. In

addition, requests from areas known to be affected by dispersion techniques which are inconsistent with EPA guidance will continue to be considered unapprovable under section 110 and will not qualify for redesignation." Memorandum from Calcagni, John, Director, Air Quality Management Division, OAQPS, U.S. EPA, Research Triangle Park, NC, to: Director, Air, Pesticides and Toxics Management Division, Regions I and IV; Director, Air and Waste Management Division, Region II; Director, Air, Radiation and Toxics Division, Region III; Director, Air and Radiation Division, Region V; Director, Air, Pesticides, and Toxics Division, Region VI; and Director, Air and Toxics Division, Regions VII, VIII, IX, and X. Procedures for Processing Requests to Redesignate Areas to Attainment. September 4, 1992.

13. "The State must be able to reasonably attribute the improvement in air quality to emission reductions which are permanent and enforceable. Attainment resulting from temporary reductions in emission rates (*e.g.*, reduced production or shutdown due to temporary adverse economic conditions) or unusually favorable meteorology would not qualify as an air quality improvement due to permanent and enforceable emission reductions. In making this showing, the State would estimate the percent reduction (from the year that was used to determine the design value for designation and classification) achieved from Federal measures. . ." Memorandum from Calcagni, John, Director, Air Quality Management Division, OAQPS, U.S. EPA, Research Triangle Park, NC, to: Director, Air, Pesticides and Toxics Management Division, Regions I and IV; Director, Air and Waste Management Division, Region II; Director, Air, Radiation and Toxics Division, Region III; Director, Air and Radiation Division, Region V; Director, Air, Pesticides, and Toxics Division, Region VI; and Director, Air and Toxics Division, Regions VII, VIII, IX, and X. Procedures for Processing Requests to Redesignate Areas to Attainment. September 4, 1992.

14. "For the purposes of redesignation, a State must meet all requirements of section 110 and Part D of the Act that were applicable prior to submittal of the complete redesignation request. When evaluating a redesignation request, Regions should not consider whether the State has met requirements that come due under the Act after submittal of a complete redesignation request. However, any requirements that came due prior to submittal of the redesignation request must be fully approved into the plan at or before the time EPA redesignates the area. Section 110(a)(2) contains general requirements for nonattainment plans. Most of the provisions of this section are the same as those contained in the pre-amended Act. . . Part D consists of general requirements applicable to all areas which are designated nonattainment based on a violation of the NAAQS. The general requirements are followed by a series of subparts specific to each pollutant. The general requirements appear in subpart 1. The requirements relating to O_3, CO, PM-10, SO_2, NO_2, and Pb appear in subparts 2 through 5. In those instances where an area is subject to both the general nonattainment provisions in subpart 1 as well as one of the pollutant-specific subparts, the general provisions may be subsumed within, or superseded by, the more specific requirements of subparts 2 through 5." Memorandum from Calcagni, John, Director, Air Quality Management Division, OAQPS, U.S. EPA, Research Triangle Park, NC, to: Director, Air, Pesticides and Toxics Management Division, Regions I and IV;

Director, Air and Waste Management Division, Region II; Director, Air, Radiation and Toxics Division, Region III; Director, Air and Radiation Division, Region V; Director, Air, Pesticides, and Toxics Division, Region VI; and Director, Air and Toxics Division, Regions VII, VIII, IX, and X. Procedures for Processing Requests to Redesignate Areas to Attainment. September 4, 1992.

15. "Section 107(d)(3)(E) of the amended Act stipulates that for an area to be redesignated, EPA must fully approve a maintenance plan which meets the requirements of section 175A. A State may submit both the redesignation request and the maintenance plan at the same time and rulemaking on both may proceed on a parallel track. Maintenance plans may, of course, be submitted and approved by EPA before a redesignation is requested. However, according to section 175A(c), pending approval of the maintenance plan and redesignation request, all applicable nonattainment area requirements shall remain in place." Memorandum from Calcagni, John, Director, Air Quality Management Division, OAQPS, U.S. EPA, Research Triangle Park, NC, to: Director, Air, Pesticides and Toxics Management Division, Regions I and IV; Director, Air and Waste Management Division, Region II; Director, Air, Radiation and Toxics Division, Region III; Director, Air and Radiation Division, Region V; Director, Air, Pesticides, and Toxics Division, Region VI; and Director, Air and Toxics Division, Regions VII, VIII, IX, and X. Procedures for Processing Requests to Redesignate Areas to Attainment. September 4, 1992.

16. "Section 175A defines the general framework of a maintenance plan. The maintenance plan will constitute a SIP revision and must provide for maintenance of the relevant NAAQS in the area for at least 10 years after redesignation. Section 175A further states that the plan shall contain such additional measures, if any, as may be necessary to ensure such maintenance. Because the Act requires a demonstration of maintenance for 10 years after an area is redesignated (not 10 years after submittal of a redesignation request), the State should plan for some lead time for EPA action on the request. . . In determining the amount of lead time to allow, States should consider that section 107(d)(3)(D) grants the Administrator up to 18 months from receipt of a complete submittal to process a redesignation request." Memorandum from Calcagni, John, Director, Air Quality Management Division, OAQPS, U.S. EPA, Research Triangle Park, NC, to: Director, Air, Pesticides and Toxics Management Division, Regions I and IV; Director, Air and Waste Management Division, Region II; Director, Air, Radiation and Toxics Division, Region III; Director, Air and Radiation Division, Region V; Director, Air, Pesticides, and Toxics Division, Region VI; and Director, Air and Toxics Division, Regions VII, VIII, IX, and X. Procedures for Processing Requests to Redesignate Areas to Attainment. September 4, 1992.

17. "In addition, the maintenance plan shall contain such contingency measures as the Administrator deems necessary to ensure prompt correction of any violation of the NAAQS [see section 175A(d)]. The Act provides that, at a minimum, the contingency measures must include a requirement that the State will implement all measures contained in the nonattainment SIP prior to redesignation. Failure to maintain the NAAQS and triggering of the contingency plan will not necessitate a revision of the

SIP unless required by the Administrator, as stated in section 175A(d)." Memorandum from Calcagni, John, Director, Air Quality Management Division, OAQPS, U.S. EPA, Research Triangle Park, NC, to: Director, Air, Pesticides and Toxics Management Division, Regions I and IV; Director, Air and Waste Management Division, Region II; Director, Air, Radiation and Toxics Division, Region III; Director, Air and Radiation Division, Region V; Director, Air, Pesticides, and Toxics Division, Region VI; and Director, Air and Toxics Division, Regions VII, VIII, IX, and X. Procedures for Processing Requests to Redesignate Areas to Attainment. September 4, 1992.

18. "The State should develop an attainment emissions inventory to identify the level of emissions in the area which is sufficient to attain the NAAQS. This inventory should be consistent with EPA's most recent guidance on emission inventories for nonattainment areas available at the time and should include the emissions during the time period associated with the monitoring data showing attainment. Source size thresholds are 100 tons/year for SO_2, NO_2, and PM-10 areas, and 5 tons/year for Pb based upon 40 CFR 51.100(k) and 51.322, as well as established practice for AIRS data. The source size threshold for serious PM-10 areas is 70 tons/year according to Clean Air Act section 189(b)(3)." Memorandum from Calcagni, John, Director, Air Quality Management Division, OAQPS, U.S. EPA, Research Triangle Park, NC, to: Director, Air, Pesticides and Toxics Management Division, Regions I and IV; Director, Air and Waste Management Division, Region II; Director, Air, Radiation and Toxics Division, Region III; Director, Air and Radiation Division, Region V; Director, Air, Pesticides, and Toxics Division, Region VI; and Director, Air and Toxics Division, Regions VII, VIII, IX, and X. Procedures for Processing Requests to Redesignate Areas to Attainment. September 4, 1992.

19. "A State may generally demonstrate maintenance of the NAAQS by either showing that future emissions of a pollutant or its precursors will not exceed the level of the attainment inventory, or by modeling to show that the future mix of sources and emission rates will not cause a violation of the NAAQS. Under the Clean Air Act, many areas are required to submit modeled attainment demonstrations to show that proposed reductions in emissions will be sufficient to attain the applicable NAAQS. For these areas, the maintenance demonstration should be based upon the same level of modeling. In areas where no such modeling was required, the State should be able to rely on the attainment inventory approach. In both instances, the demonstration should be for a period of 10 years following the redesignation." Memorandum from Calcagni, John, Director, Air Quality Management Division, OAQPS, U.S. EPA, Research Triangle Park, NC, to: Director, Air, Pesticides and Toxics Management Division, Regions I and IV; Director, Air and Waste Management Division, Region II; Director, Air, Radiation and Toxics Division, Region III; Director, Air and Radiation Division, Region V; Director, Air, Pesticides, and Toxics Division, Region VI; and Director, Air and Toxics Division, Regions VII, VIII, IX, and X. Procedures for Processing Requests to Redesignate Areas to Attainment. September 4, 1992.

20. "In either case, to satisfy the demonstration requirement the State should project emissions for the 10-year period following redesignation, either for the purpose of

showing that emissions will not increase over the attainment inventory or for conducting modeling. The projected inventory should consider future growth, including population and industry, should be consistent with the attainment inventory, and should document data inputs and assumptions. All elements of the demonstration (*e.g.*, emissions projections, new source growth, and modeling) should be consistent with current EPA modeling guidance." Memorandum from Calcagni, John, Director, Air Quality Management Division, OAQPS, U.S. EPA, Research Triangle Park, NC, to: Director, Air, Pesticides and Toxics Management Division, Regions I and IV; Director, Air and Waste Management Division, Region II; Director, Air, Radiation and Toxics Division, Region III; Director, Air and Radiation Division, Region V; Director, Air, Pesticides, and Toxics Division, Region VI; and Director, Air and Toxics Division, Regions VII, VIII, IX, and X. Procedures for Processing Requests to Redesignate Areas to Attainment.
September 4, 1992.

21. "Once an area has been redesignated, the State should continue to operate an appropriate air quality monitoring network, in accordance with 40 CFR Part 58, to verify the attainment status of the area. The maintenance plan should contain provisions for continued operation of air quality monitors that will provide such verification. In cases where measured mobile source parameters have changed over time (*e.g.*, vehicles miles traveled congestion), the State may also need to perform a saturation monitoring study to determine the need for, and location of, additional permanent monitors." Memorandum from Calcagni, John, Director, Air Quality Management Division, OAQPS, U.S. EPA, Research Triangle Park, NC, to: Director, Air, Pesticides and Toxics Management Division, Regions I and IV; Director, Air and Waste Management Division, Region II; Director, Air, Radiation and Toxics Division, Region III; Director, Air and Radiation Division, Region V; Director, Air, Pesticides, and Toxics Division, Region VI; and Director, Air and Toxics Division, Regions VII, VIII, IX, and X. Procedures for Processing Requests to Redesignate Areas to Attainment. September 4, 1992.

22. "Each State should ensure that it has the legal authority to implement and enforce all measures necessary to attain and to maintain the NAAQS. Section 110(a)(2)(b) and (F) of the Clean Air Act, as amended, and regulations promulgated at 40 CFR 51.110(k), suggest that one such measure is the acquisition of ambient and source emission data to demonstrate attainment and maintenance. Regardless of whether the maintenance demonstration is based on a showing that future emission inventories will not exceed the attainment inventory or on modeling, the State submittal should indicate how the State will track the progress of the maintenance plan. This is necessary due to the fact that the emission projections made for the maintenance demonstration depend on assumptions of point and area source growth." Memorandum from Calcagni, John, Director, Air Quality Management Division, OAQPS, U.S. EPA, Research Triangle Park, NC, to: Director, Air, Pesticides and Toxics Management Division, Regions I and IV; Director, Air and Waste Management Division, Region II; Director, Air, Radiation and Toxics Division, Region III; Director, Air and Radiation Division, Region V; Director, Air, Pesticides, and Toxics Division,

Region VI; and Director, Air and Toxics Division, Regions VII, VIII, IX, and X. Procedures for Processing Requests to Redesignate Areas to Attainment. September 4, 1992.

23. "Section 175A of the Act also requires that a maintenance plan include contingency provisions, as necessary, to promptly correct any violation of the NAAQS that occurs after redesignation of the area. . . For the purposes of section 175A, a State is not required to have fully adopted contingency measures that will take effect without further action by the State in order for the maintenance plan to be approved. However, the contingency plan is considered to be an enforceable part of the SIP and should ensure that the contingency measures are adopted expediently once they are triggered. The plan should clearly identify the measures to be adopted, a schedule and procedure for adoption and implementation, and a specific time limit for action by the State. As a necessary part of the plan, the State should also identify specific indicators, or triggers, which will be used to determine when the contingency measures need to be implemented." Memorandum from Calcagni, John, Director, Air Quality Management Division, OAQPS, U.S. EPA, Research Triangle Park, NC, to: Director, Air, Pesticides and Toxics Management Division, Regions I and IV; Director, Air and Waste Management Division, Region II; Director, Air, Radiation and Toxics Division, Region III; Director, Air and Radiation Division, Region V; Director, Air, Pesticides, and Toxics Division, Region VI; and Director, Air and Toxics Division, Regions VII, VIII, IX, and X. Procedures for Processing Requests to Redesignate Areas to Attainment. September 4, 1992.

24. "The EPA will review what constitutes a contingency plan on a case-by-case basis. At a minimum, it must require that the State will implement all measures contained in the Part D nonattainment plan for the area prior to redesignation [see section 175A(d)]. This language suggests that a State may submit a SIP revision at the time of its redesignation request to remove or reduce the stringency of control measures. Such a revision can be approved by EPA if it provides for compensating equivalent reductions. A demonstration that measures are equivalent would have to include appropriate modeling or an adequate justification. Alternatively, a State might be able to demonstrate (through EPA-approved modeling) that the measures are not necessary for maintenance of the standard. In either case, the contingency plan would have to provide for implementation of any measures that were reduced or removed after redesignation of the area." Memorandum from Calcagni, John, Director, Air Quality Management Division, OAQPS, U.S. EPA, Research Triangle Park, NC, to: Director, Air, Pesticides and Toxics Management Division, Regions I and IV; Director, Air and Waste Management Division, Region II; Director, Air, Radiation and Toxics Division, Region III; Director, Air and Radiation Division, Region V; Director, Air, Pesticides, and Toxics Division, Region VI; and Director, Air and Toxics Division, Regions VII, VIII, IX, and X. Procedures for Processing Requests to Redesignate Areas to Attainment. September 4, 1992.

3.2 AMBIENT AIR

3.2.1 General

Ambient air is defined in 40 CFR 50.1(e) as "that portion of the atmosphere, external to buildings, to which the general public has access." Generally, this definition signifies that ambient air would constitute any air to which the public could be exposed, even for a short period of time. The only exemption from the ambient air provision is the atmosphere over land that is owned or controlled by the source and to which public access (and, therefore, exposure) is precluded by a fence or other physical barrier.[1] It should be noted that for sources operating on leased property, ambient air is considered to exclude only the atmosphere over the land leased and controlled by the source.[2]

3.2.2 Location Aspects

The EPA considers ambient air to include elevated building receptor sites and parking lots to which the public has access. Although it may not be practical to analyze the air quality at every such location, States should evaluate the air quality impact at these sites if it seems necessary to protect health and welfare.[3,4]

For modeling purposes, ambient air is considered to be everything outside of contiguous plant property where public access is not precluded by an effective physical barrier. Therefore, modeling receptors should be placed anywhere outside of inaccessible plant property, including over bodies of water, unfenced plant property, on buildings, over roadways and over property owned by other sources.[5,6]

The following examples should clarify potential uncertainties regarding receptor location. In the case of waterways, receptors should be placed over any body of water not privately owned and to which public access is allowed. Even where public recreational traffic is limited, the air above a body of water should be considered ambient air as long as the potential for public exposure exists.[7] With respect to roadways dividing plant property, the air above the roadway should be monitored by a receptor, even if the road separates otherwise inaccessible private property owned by a single source.[8,9] Regarding property owned by other

sources, current policy requires that receptors be placed over neighboring property regardless of public accessibility: the atmosphere above neighboring property is considered "ambient air" in relation to emissions from a given source.[10]

3.2.3 Time Aspects

Even if public access to a given site is time-limited, the site should not be excluded from the ambient air definition as long as the other conditions apply. Regardless of the period of exposure at a given site (or receptor), ambient air is defined in terms of public access, not frequency of access, length of stay, age of person or other factors.[11]

3.2.4 Public Access

If an area is owned or leased by the source and public access is prevented, the area is not ambient air with respect to the source's own emissions. However, there must be sufficient barriers to prevent public access. Barriers considered sufficient to prevent access are generally limited to fences. However, a clearly posted area alongside a river that is regularly patrolled by security guards has been determined to qualify as sufficient protection.[12,13]

3.2.5 PSD Considerations

Unlike the NAAQS, PSD increments apply only to the ground level and not to building rooftops. The PSD system, unlike the NAAQS system, does not attempt to achieve one single goal: instead, it represents a balance determined by Congress between economic growth and deterioration of air quality. If building rooftops were included in PSD permitting strategy, the PSD system would be appreciably more stringent than Congress had contemplated.[14] Although rooftops are not defined as ambient air when calculating PSD increment consumption, a State may measure PSD increments at the top of buildings if it so desires.[15,16]

3.2.6 Land Acquisition

Land acquisition and removal of the area from ambient air is not automatically considered a dispersion technique prohibited by section 123, but will instead be reviewed on a case-by-case basis. (Also see the discussion on stack height regulations in Section 7 of this report.) In only a few instances has the EPA tolerated land acquisition to contain modeled violations of the NAAQS.[17]

3.2.7 Monitor Siting Location Considerations

With respect to receptor locations for modeling and ambient air purposes, EPA does not consider whether such sites could meet standard siting criteria for monitors. Although siting criteria may preclude the placement of ambient monitors at certain locations, this does not preclude the placement of model receptors at these sites.[18]

REFERENCES FOR SECTION 3.2

1. "We are retaining the policy that the exemption from ambient air is available only for the atmosphere over land owned or controlled by the source and to which public access is precluded by a fence or other physical barriers." Letter from Douglas M. Costle to Jennings Randolph, Chairman, Committee on Environment and Public Works, United States Senate, Washington, D.C. Reply to letter of October 23, expressing continued interest in the Agency's definition of "ambient air." December 19, 1980. (PN-123-80-12-19-001).

2. "We agree with your position that all property outside of the property leased and controlled by EFKI would be considered ambient air." Memorandum from Helms, G.T., OAQPS, U.S. EPA, to W.S. Baker, Air Branch Chief, Region II. Ambient Air Issues from New Jersey Department of Environmental Protection. July 27, 1987.

3. "Our general policy is that the only exemption to compliance with the provisions of ambient air is for the atmosphere over land owned or controlled by the source and to which public access is precluded by a fence or other physical barriers. While EPA considers ambient air to include elevated building receptor sites, it is not practical to analyze the air quality at every such existing location. Therefore, both EPA and the States must exercise their best technical judgment as to when such sites must be evaluated so as to protect public health and welfare." Letter from Kathleen M. Bennett, Assistant Administrator for Air, Noise, and Radiation, to Harry H. Hovey, Jr. P.E., Director, Division of Air, New York State Department of Environmental Conservation, Albany, New York. March 18, 1983. (PN-110-83-03-18-063).

4. "Having concluded that the air above the parking lot is ambient air, we see no basis for excluding it from coverage by the State's implementation plan." Memorandum from James, M.A., OGC, to C. Simon, Chief, Air Programs Branch, U.S. EPA. Region II. Attainment of National Standards in Open Air Parking Lots. September 27, 1972.

5. "The Regional Meteorologists propose that for modeling purposes the air everywhere outside of contiguous plant property to which public access is precluded by a fence or other effective physical barrier should be considered in locating receptors. Specifically, for stationary source modeling, receptors should be placed everywhere outside inaccessible plant property. For example, receptors should be included over bodies of water, over unfenced plant property, on buildings, over roadways, and over property owned by other sources." Memorandum from Koerber, M., U.S. EPA. Region V, to J. Tikvart, OAQPS, U.S. EPA. Ambient Air. May 16, 1985.

6. "The Regional Meteorologists' memorandum to which you refer does not imply any change in this national policy and simply harmonizes modeling procedures with our long-standing policy. It is intended to ensure consistent Regional implementation of

that policy and to dispel any questions about pollutant concentrations at locations where the general public has access." Letter from Emison, G.A., OAQPS, U.S. EPA, to W.F. O'Keefe, American Petroleum Institute. January 22, 1986.

7. "Case 3 (Wayne County, MI): this case involves the air over the Detroit River, the Rouge River, and the Short-cut Canal. We agree that the air over all three of these is ambient air, since none of the companies owns them or controls public access to them." Memorandum from G.T. Helms, Chief, Control Programs Operations Branch, OAQPS, U.S. EPA, to Steve Rothblatt, Chief, Air Branch, U.S. EPA. Region V. Ambient Air. April 30, 1987. (PN-110-87-04-30-083).

8. "Case 1 (Dakota County, MN): This case involves two noncontiguous pieces of fenced property owned by the same source, divided by a public road. We agree that the road is clearly ambient air and that both fenced pieces of plant property are not." Memorandum from G.T. Helms, Chief, Control Programs Operations Branch, OAQPS, U.S. EPA, to Steve Rothblatt, Chief, Air Branch, U.S. EPA. Region V. Ambient Air. April 30, 1987. (PN-110-87-04-30-083).

9. "Scenario One: We agree with you that the road and the unfenced property are ambient air and could be locations for controlling receptor." Memorandum from G.T. Helms, Chief, Controlled Programs Operations Branch, OAQPS, U.S. EPA, to Bruce Miller, Chief, Air Programs Branch, U.S. EPA. Region IV. Ambient Air. April 30, 1987. (PN-110-87-04-30-082).

10. "Case 5: (involves the placement of receptors on another source's fenced property): As mentioned above in case 2, we feel that present policy <u>does</u> require that receptors be placed over another source's property to measure the contribution of the outside source to its neighbor's ambient air." Memorandum from G.T. Helms, Chief, Control Programs Operations Branch, OAQPS, U.S. EPA, to Steve Rothblatt, Chief, Air Branch, U.S. EPA. Region V. Ambient Air. April 30, 1987. (PN-110-87-04-30-083).

11. "Regardless of whether <u>any</u> member of the public is expected to <u>remain</u> at a particular place for a specific period of time, ambient air is defined in terms of public <u>access</u>, not frequency of access, length of stay, age of the person or other limitations." Memorandum from Tyler, D.D., OAQPS, U.S. EPA, to A. Davis, U.S. EPA. Region VI. Definition of Ambient Air for Lead. May 26, 1983.

12. "We do not think that any of the barriers mentioned are sufficient to preclude public access so as to allow the source to dispense with a fence. An example of an unfenced boundary that would qualify is a property line along a river that is clearly posted and regularly patrolled by security guards." Memorandum from G.T. Helms, Chief, Controlled Programs Operations Branch, OAQPS, U.S. EPA, to Bruce Miller, Chief, Air Programs Branch, U.S. EPA. Region IV. Ambient Air. April 30, 1987. (PN-110-87-04-30-082).

13. "Case 2 (Warrick County, IN): This case involves two large sources on both sides of the Ohio River. We agree that receptors should be located over the river since this is a public waterway, not controlled by the sources. We also agree that the river does indeed form a sufficient natural boundary/barrier and that fencing is not necessary, since the policy requires a fence or other physical barrier. However, some conditions must be met. The riverbank must be clearly posted and regularly patrolled by plant security. It must be very clear that the area is not public. Any areas where there is any question --*i.e.*, grassy areas, etc.-- should be fenced and marked, even if there is only a very remote possibility that the public would attempt to use this property." Memorandum from G.T. Helms, Chief, Control Programs Operations Branch, OAQPS, U.S. EPA, to Steve Rothblatt, Chief, Air Branch, U.S. EPA. Region V. Ambient Air. April 30, 1987.
(PN-110-87-04-30-083).

14. "Given this conclusion, one could argue, based on the text of the relevant regulations and the Clean Air Act, that the PSD increments apply whenever the NAAQS apply, and that both must apply throughout the 'ambient air'. However, the PSD system, unlike the NAAQS system, does not aim at achieving one single goal. Rather it represents a balance struck first by Congress between a given level of protection against degradation and a given potential for economic growth. It appears that the calculations on which that balancing judgment was based all assumed that PSD increments would be measured at ground level." Memorandum from Joseph A. Cannon, Assistant Administrator for Air and Radiation, Office of Air, Noise, and Radiation, to Charles Jeter, Regional Administrator, U.S. EPA. Region IV. Applicability of PSD Increments to Building Rooftops. June 11, 1984. (PN-165-84-06-11-014).

15. "Accordingly, I recommend that we inform Alabama that we do not now require that compliance with PSD increments be measured at the tops of buildings. A State may, of course, adopt such an approach if it so desires." Memorandum from Joseph A. Cannon, Assistant Administrator for Air and Radiation, Office of Air, Noise, and Radiation, to Charles Jeter, Regional Administrator, U.S. EPA. Region IV. Applicability of PSD Increments to Building Rooftops. June 11, 1984. (PN-165-84-06-11-014).

16. "As you correctly pointed out, PSD increment consumption does not apply at the tops of buildings." Memorandum from G.T. Helms, Chief, Control Programs Operations Branch, OAQPS, U.S. EPA, to Bruce P. Miller, Chief, Air Programs Branch, U.S. EPA. Region IV. Ambient Air Definition. September 21, 1987. (PN-110-87-09-21-086).

17. "We have never either flatly stated that land acquisition in general is acceptable or unacceptable under section 123 of the Clean Air Act . . . we will review individual situations on a case-by-case basis." Memorandum from Tyler, D., OAQPS, U.S. EPA, to I. Dickstein, U.S. EPA. Region VIII. Wyoming--Definition of Ambient Air. April 7, 1987.

18. "All receptor locations that may affect control strategy requirements, and meet the definition of 'ambient air', must be included in regulatory modeling applications. Ambient air is defined in 40 CFR Part 50.1(e) as 'that portion of the atmosphere, external to buildings, to which the general public has access'. Receptor points 180 and 197 are adjacent to a roadway to which the public clearly has access; thus, they must be included in the SIP modeling analysis. Although siting criteria may preclude placement of ambient monitors at these receptors, as was discussed by Asarco, this does not preclude the placement of model receptors at these sites." Letter from Douglas M. Skie, Chief, Air Programs Branch, U.S. EPA. Region VIII, to Jeffrey T. Chaffee, Montana Department of Health and Environmental Sciences. East Helena Lead SIP. March 13, 1992.

4.0 EMISSION INVENTORIES

TO BE PROVIDED

5.0 AMBIENT AIR QUALITY MONITORING AND DATA USAGE

5.1 GENERAL

According to the regulations established in 40 CFR Part 58, States are required to establish and maintain an air quality surveillance system for the purpose of measuring ambient air concentrations of those pollutants for which national ambient air quality standards (NAAQS) have been defined. The network of monitoring stations that is to be provided for in State implementation plans is designated as the State and Local Air Monitoring Stations (SLAMS) network. The general SIP monitoring requirements are contained in 40 CFR 58.20 and include the following.[1]

1. Requirements in Appendices A, C, D, and E of 40 CFR Part 58 which pertain to quality assurance for monitoring stations, monitoring methodology, monitoring network design, and probe siting criteria, respectively

2. An annual review of the monitoring network to assure that the monitoring objectives as defined in Appendix D of Part 58 are satisfied

3. Operation of at least one station of the SLAMS network per pollutant during any stage of an air pollution episode

4. Provision of a SLAMS network description for public review and submission to the EPA Administrator

The SIP itself does not have to contain the network description; however, these must be kept on file at the State agency's office, made available for public inspection, and submitted to the Administrator upon request. A State's prior SIP submission that covers air quality monitoring in general may meet the requirements for PM-10 SIP's. The Regional Office should determine whether the State's prior monitoring submission includes PM-10. If the monitoring submission specifically excludes PM-10, the SIP must provide the necessary information on PM-10 monitoring.[2,3] Further information on what the SIP itself must contain is provided in *Guidelines for Implementation of the Ambient Air Monitoring Regulations*, EPA-450/4-79-038.

Any ambient air quality station other than a SLAMS or PSD station from which a State intends to use data for demonstrating attainment or nonattainment or for computing a design value for control purposes must meet the requirements for SLAMS as described in 40 CFR Parts 58.13 and 58.22 as well as the requirements of Appendices A and E of Part 58.[4] In addition, any ambient air quality station other than a SLAMS or PSD station from which a State intends to use data for SIP-related functions other than as part of an attainment or nonattainment demonstration or for computing a design value for NAAQS control purposes, need not necessarily satisfy the requirements for a SLAMS station, but must be operated in accordance with specifications approved by the Regional Administrator.[5]

Measurement of meteorological variables at the location of an air quality monitoring station provides a basis for correlating air pollutant levels with local weather patterns. Meteorological monitoring data are also required for the purposes of air quality modeling. Meteorological inputs to modeling are discussed in Section 6.0 of this document.[6]

Finally, guidelines for sources required to monitor ambient air quality under PSD regulations are contained in the *Ambient Monitoring Guidelines for Prevention of Significant Deterioration (PSD)*[7] and general considerations for requiring ambient air monitoring under PSD regulations are contained in the *New Source Review Workshop Manual (draft).*[8] Section 165(e)(2) of the Act requires conducting preconstruction air quality monitoring to determine whether emissions from new sources or source modifications located in attainment or unclassifiable areas will result in exceedance of the NAAQS. Section 167(a)(7) of the Act gives EPA the discretion to require postconstruction air quality monitoring to determine the ambient air quality impacts from emissions of new sources or source modifications on such areas.[7]

Under PSD regulations, source applicants are generally required to collect ambient air quality data for 1 year, but EPA has the discretion to allow a shorter collecting period (not less than 4 months) if the resulting data can demonstrate a complete analysis of the ambient air quality impacts the source will have on the area. Source applicants must also use quality assurance procedures pursuant to Appendix B of 40 CFR Part 58 in order to ensure the accuracy and precision of the data collected.[8,9] EPA requirements for incorporating PSD provisions in SIP's are contained in 40 CFR Part 51.166.

REFERENCES FOR SECTION 5.1

1. U.S. Environmental Protection Agency. *Code of Federal Regulations*. Title 40, Chapter I, Subchapter C, Part 58.20. July 1, 1991.

2. U.S. Environmental Protection Agency. *PM-10 SIP Development Guideline*. Office of Air Quality Planning and Standards, Research Triangle Park, North Carolina. EPA-450/4-87-013. June 1987. Section 3.0.

3. "Any ambient air quality monitoring station other than a SLAMS or PSD station from which the State intends to use the data as part of a demonstration of attainment or nonattainment or in computing a design value for control purposes of the National Ambient Air Quality Standards (NAAQS) must meet the requirements for SLAMS described in section 58.22 and, after January 1, 1983, must also meet the requirements for SLAMS as described in section 58.13 and Appendices A and E to this part." U.S. Environmental Protection Agency. *Code of Federal Regulations*. Title 40, Chapter I, Subchapter C, Part 58.14 (a). July 1, 1991.

4. "The State shall adopt and submit to the Administrator a revision to the plan which will: . . . (e) Provide for having a SLAMS network description available for public inspection and submission to the Administrator upon request." U.S. Environmental Protection Agency. *Code of Federal Regulations*. Title 40, Chapter I, Subchapter C, Part 58.20(e). July 1, 1991.

5. "Any ambient air quality monitoring station other than a SLAMS or PSD station from which the State intends to use data for SIP-related functions other than described in paragraph (a) of this section is not necessarily required to comply with the requirements of a SLAMS station under paragraph (a) but must be operated in accordance with a monitoring schedule, methodology, quality assurance procedures, and probe or instrument-siting specifications approved by the Regional Administrator." U.S. Environmental Protection Agency. *Code of Federal Regulations*. Title 40, Chapter I, Subchapter C, Part 58.14 (b). July 1, 1991

6. U.S. Environmental Protection Agency. *On-site Meteorological Program Guidance for Regulatory Modeling Applications*. PB87-227542. June 1987.

7. "The court ruled that section 165(e)(2) of the Clean Air Act requires that continuous preconstruction air quality monitoring data must be collected to determine whether emissions from a source will result in exceeding the National Ambient Air Quality Standards (NAAQS) . . ." U.S. EPA. *Ambient Monitoring Guidelines for Prevention of Significant Deterioration (PSD)*. Office of Air Quality Planning and Standards, Research Triangle Park, NC. EPA Publication No. EPA-450/4-87-007. May 1987. page 3.

8. "(m)(1)(iv) The plan shall provide that, in general, the continuous air monitoring data that is required shall have been gathered over a period of one year . . . except that, if the reviewing authority determines that a complete and adequate analysis can be accomplished with monitoring data gathered over a period shorter than one year (but not to be less than four months) . . . (m)(3) The plan shall provide that the owner or operator of a major stationary source or major modification shall meet the requirements of Appendix B to Part 58 of this chapter . . ." U.S. Environmental Protection Agency, *Code of Federal Regulations*. Title 40 Chapter I, Subchapter C, Part 51.166. July 1, 1991.

9. U.S. Environmental Protection Agency. *New Source Review Workshop Manual.* Draft document. Office of Air Quality Planning and Standards, Research Triangle Park, North Carolina. October 1990.

5.2 QUALITY ASSURANCE

Quality Assurance requirements for SLAMS networks are contained in Appendix A of 40 CFR Part 58, and requirements for PSD monitoring are contained in Appendix B of 40 CFR Part 58. The requirements in Appendix A are general in nature in order to allow each State the opportunity to develop the most efficient and effective quality assurance system for its specific circumstances.[1] Accuracy and precision tests for both manual and automated PM-10 sampling are the essence of the quality assurance system established. The results of all valid precision and accuracy tests must be reported on a quarterly basis to the Atmospheric Research and Exposure Assessment Laboratory (AREAL) (formerly the Environmental Monitoring Systems Laboratory (EMSL)). A list of all PM-10 monitoring sites and their Aerometric Information Retrieval System (AIRS) site identification codes shall be kept updated and on file with the appropriate EPA Regional Office and with AREAL.[1] AIRS was formerly known as the Storage and Retrieval of Aerometric Data (SAROAD) system.

The quality assurance procedures of Appendix A of 40 CFR Part 58 do not cover PM-10 methods other than the reference method defined in Appendix J of Part 50 (see Section 5.3 of this document) or equivalent methods designated in accordance with Part 53. Other methods may be allowed for conducting PM-10 episode monitoring. Episode monitoring is discussed in Section 5.6 of this document. States will need to develop their own quality assurance procedures for those methods not defined in Appendix J. Such procedures should be similar or analogous to those procedures described in Section 3.0 of Appendix A for the PM-10 reference method.[2]

Primary guidance for developing the quality assurance program for ambient air monitoring is provided in the *Quality Assurance Handbook for Air Pollution Measurement Systems, Volume I - Principles* (EPA-600/9-76-005), and in the *Quality Assurance Handbook for Air Pollution Measurement Systems, Volume II - Ambient Air Specific Methods* (EPA-600/4-77-027a). These documents contain suggested procedures, checks, and control specifications. Specifically, section 2.11.0 provides quality assurance procedures for the reference method for determination of particulate matter as PM-10 in the atmosphere (High Volume PM-10 Sampler Method). As a minimum, each quality assurance program must include operational procedures for the following activities:[3]

1. Selection of methods, analyzers, or samplers
2. Training
3. Equipment installation
4. Selection and control of calibration standards
5. Calibration procedures and frequency
6. Zero/span checks and adjustments of automated analyzers
7. Control checks and their frequency
8. Control limits for zero, span, and other control checks, and respective corrective actions when such limits are surpassed
9. Calibration and zero/span checks for multiple range analyzers
10. Preventive and remedial maintenance
11. Recording and validating data
12. Data quality assessment (precision and accuracy)
13. Documentation of quality control information

Generally, standards used for ambient air monitoring quality assurance must be traceable to standards or devices certified by the National Institute of Standards Technology (NIST), or other approved reference material. Flow and mass standards used for PM-10 sampling and analysis must be traceable to the NIST.[4]

Agencies operating SLAMS network stations are subject to annual EPA systems audits of their ambient air monitoring program and are required to participate in EPA's National Performance Audit Program.[5] Audit procedures are described in section 1.4.16 of the *Quality Assurance Handbook for Air Pollution Measurement Systems, Volume I - Principles* (EPA-600/9-76-005). The EPA's National Performance Audit Program is described in section 2.0.10 of the *Quality Assurance Handbook for Air Pollution Measurement Systems, Volume II - Ambient Air Specific Method.* Systems audit criteria and procedures are given in section 2.0.11 of the same document.

REFERENCES FOR SECTION 5.2

1. U.S. Environmental Protection Agency. *Code of Federal Regulations*. Title 40, Chapter I, Subchapter C, Part 58, Appendix A. July 1, 1991

2. "4.2 Quality Assurance. PM-10 methods other than the reference method are not covered under the quality assessment requirements of Appendix A. Therefore, States must develop and implement their own quality assessment procedures for those methods allowed under this section 4. These quality assessment procedures should be similar or analogous to those described in section 3 of Appendix A for the PM-10 reference method." U.S. Environmental Protection Agency. *Code of Federal Regulations*. Title 40, Chapter I, Subchapter C, Part 58, Appendix C July 1, 1991.

3. U.S. Environmental Protection Agency. *Code of Federal Regulations*. Title 40, Chapter I, Subchapter C, Part 58, Appendix A. Section 2.2. July 1, 1991.

4. U.S. Environmental Protection Agency. *Code of Federal Regulations*. Title 40, Chapter I, Subchapter C, Part 58, Appendix A. Section 2.3. July 1, 1991.

5. U.S. Environmental Protection Agency. *Code of Federal Regulations*. Title 40, Chapter I, Subchapter C, Part 58, Appendix A. Section 2.4. July 1, 1991.

5.3 AMBIENT MONITORING METHODOLOGY

5.3.1 General

The reference or equivalent methods which must be used in the monitoring methods used in SLAMS networks are defined in 40 CFR Part 50.1 and are listed in Table 5-1.[1]

TABLE 5-1. MANUAL AND AUTOMATED METHODS APPROVED AS OF FEBRUARY 14, 1992

Manual Reference Methods	Automated Equivalent Methods
Wedding & Associates PM-10 Critical Flow HV Sampler	Andersen Inst. FH62I-N PM_{10} Beta Attenuation Monitor
Sierra-Andersen/GMW 1200	Rupprecht & Patashnick TEOM Series 1400 PM-10 Monitor
Sierra-Andersen/GMW 321-B	Wedding & Associates PM-10 Beta Gauge Automated Particle Sampler
Sierra-Andersen/GMW 321-C	
Oregon DEQ MV Special Sampler	
Sierra-Andersen/GMW 241 & 241M Dichot Sampler	

The reference method to be used for measuring ambient concentrations of PM-10 to determine compliance with the primary and secondary NAAQS, as specified in 40 CFR Part 50.6, is contained in Appendix J to 40 CFR Part 50.[2]

In general, the reference method is based on selection of particulate matter with an aerodynamic diameter of less than or equal to a nominal 10 micrometers by inertial separation, followed by filtration and gravimetric determination of the PM-10 mass on filter substrate. In practice, high-volume air samplers with a size selective inlet are used for most sampling for ambient PM-10 concentrations.[2]

SLAMS data collected after August 1, 1988 are not allowed to include data from nonreference method samplers. In the event that a nonreference method sampler is designated as a reference sampler without further future modification, all historical data produced by that sampler are retroactively defined as data produced by a reference sampler.[3] In addition, at collocated sample sites, data from reference samplers are always precedent over data from nonreference samplers. If multiple samplers are collocated for data quality assessment purposes (*i.e.*, precision and accuracy) similar sampler types must be used, and one sampler must be designated *a priori* for data reporting purposes as defined in Appendix A of 40 CFR Part 58. In situations where more than one type of sampler is used by a reporting organization, collocated precision sites should be established for each sampler type.[4]

The air quality regulations allow the use, for a period of time determined by the Administrator, of any manual method or analyzer purchased prior to cancellation of its reference or equivalent method designation in 40 CFR 53.11 or 40 CFR 53.16.[5] Certain allowances are also made, for samplers with more than one range and in specific geographical areas, for methods with higher, nonconforming measurement ranges.[6] No reference method or equivalent method that has been modified in a manner that will, or might, significantly alter the performance characteristic of the method, may be used in a SLAMS network without prior approval by the Administrator.[7]

Finally, additional requirements pertaining to ambient monitoring methodology and data usage under PSD regulations are contained in *Ambient Monitoring Guidelines for Prevention of Significant Deterioration.*[8]

5.3.2 Sampling Schedule

From an historical perspective, the sampling interval for PM-10 monitors consisted of a short-term and long-term sampling strategy as prescribed by 40 CFR Part 58.13. In general, the short term strategy was used during the first full year of sampling and required daily sampling (at a site designated as the site of expected highest concentration) in Group I areas, every other day in Group II areas, and once every six days in Group III areas. The long-term sampling strategy occurred after the short-term strategy ended (in most cases after the first full year of sampling), and the sampling interval varied according to the relationship of air quality levels to the NAAQS. For most PM-10 areas in the United States, it is likely that

the short-term sampling requirements have been met and the long-term sampling strategy is currently in effect.

The current sampling schedule requirements for ambient concentrations of PM-10 are as follows:[9]

- In those areas in which the short-term (24-hour) standard is controlling (*i.e.*, has the highest ratio of design concentration at the site to the NAAQS) the sampling interval is prescribed in Figure 1 of Part 58.13 (the prescribed sampling intervals are once every day, once every other day, or once every six days). In general, Figure 1 shows that the closer the air quality levels are to the NAAQS, the greater the sampling frequency required

- In areas in which the annual standard is the controlling standard, the minimum sampling period for all monitors in a given area is once every six days

The sampling interval for ambient PM-10 monitors under PSD regulations are consistent with the Part 58 regulations for SLAMS networks.[10]

5.3.3 Data Completeness

According to 40 CFR Part 50, Appendix K, for PM-10, all data produced by the National Air Monitoring Stations (NAMS) and SLAMS networks are required to be used in making comparisons with the PM-10 NAAQS and a minimum of 75 percent of the scheduled PM-10 samples per quarter are required.[11] For monitors used in PSD networks, a minimum of 80 percent of the individual 24-hourly values for manual methods should be reported in any sampling period.[12]

REFERENCES FOR SECTION 5.3

1. "(f) Reference method means a method of sampling and analyzing the ambient air for an air pollutant that is specified as a reference method in an appendix to this part, or a method that has been designated as a reference method in accordance with part 53 of this chapter; it does not include a method for which a reference method designation has been canceled in accordance with 53.11 or 53.16 of this chapter." and "(g) Equivalent method means a method of sampling and analyzing the ambient air for an air pollutant that has been designated an equivalent method in accordance with part 53 of this chapter; it does not include a method for which an equivalent method designation has been canceled in accordance with 53.11 or 53.16 of this section." U.S. Environmental Protection Agency. *Code of Federal Regulations*. Title 40, Chapter I, Subchapter C, Part 50.1. (f) and (g). July 1, 1991.

2. U.S. Environmental Protection Agency. *Code of Federal Regulations*. Title 40, Chapter I, Subchapter C, Part 50, Appendix J. July 1, 1991

3. "If a nonreference sampler without further modification is designated as a reference sampler in the future, then all of its historical data is retroactively defined as data produced by a reference sampler" Memorandum from Gerald Emison, Director, OAQPS, U.S. EPA, to Distribution. Revision to Policy on the Use of PM-10 Measurement Data. November 21, 1988.

4. "In the event that more than one PM-10 sampler is operating concurrently at a location, data from reference method samplers always takes precedence over data from nonreference samplers. If multiple samplers are collocated for data quality assessment purposes (*i.e.*, precision and accuracy), similar sampler types must be used and one sampler must be designated a priori for data reporting purposes (Appendix A to 40 CFR 58). Furthermore, if more than one type of sampler is used by a reporting organization, collocated precision sites should be established for each sampler type." Memorandum from Gerald Emison, Director, OAQPS, U.S. EPA, to Distribution. Revision to Policy on the Use of PM-10 Measurement Data. November 21, 1988.

5. "2.3 Any manual method or analyzer purchased prior to cancellation of its reference or equivalent method designation under 53.11 or 53.16 of this chapter may be used in a SLAMS following cancellation for a reasonable period of time to be determined by the Administrator." U.S. Environmental Protection Agency. *Code of Federal Regulations*. Title 40, Chapter I, Subchapter C, Part 58, Appendix C. July 1, 1991.

6. "2.6 Use of Methods with Higher, Nonconforming Ranges in Certain Geographical Areas . . . 2.6.2 Nonconforming ranges. An analyzer may be used (indefinitely) on a range which extends to concentrations higher than two times the upper limit specified in Table B-1 of Part 53 of this chapter if . . ." U.S. Environmental Protection Agency.

Code of Federal Regulations. Title 40, Chapter I, Subchapter C, Part 58, Appendix C. July 1, 1991.

7. "2.8 Modifications of Methods by Users. 2.8.1 Except as otherwise provided in this section (2.8), no reference method, equivalent method, or alternative method may be used in a SLAMS if it has been modified in a manner that will, or might, significantly alter the performance characteristics of the method without prior approval by the Administrator." U.S. Environmental Protection Agency. *Code of Federal Regulations*. Title 40, Chapter I, Subchapter C, Part 58, Appendix C. July 1, 1991.

8. U.S. Environmental Protection Agency. *Ambient Monitoring Guidelines for Prevention of Significant Deterioration (PSD)*. Office of Air Quality Planning and Standards, Research Triangle Park, NC. EPA-450/4-87-007. May 1987.

9. U.S. Environmental Protection Agency. *Code of Federal Regulations*. Title 40, Chapter I, Subchapter C, Part 58.13. July 1, 1991.

10. "2.7 Frequency of Sampling...The frequencies discussed below are consistent with the Part 58 sampling frequencies." U.S. Environmental Protection Agency. *Ambient Monitoring Guidelines for Prevention of Significant Deterioration (PSD)*. Office of Air Quality Planning and Standards, Research Triangle Park, NC. EPA-450/4-87-007. May 1987.

11. "2.3 . . . For the purposes of making comparisons with the particulate matter standards, all data produced by National Air Monitoring Stations (NAMS), State and Local Air Monitoring Stations (SLAMS) and other sites submitted to EPA in accordance with the Part 58 requirements must be used, and a minimum of 75 percent of the scheduled PM-10 samples per quarter are required." U.S. Environmental Protection Agency. *Code of Federal Regulations*. Title 40. Part 50, Appendix K. Interpretation of the National Ambient Air Quality Standards for Particulate Matter. June 1990.

12. "8.1 Air quality Data Reporting . . . For manual methods, 80 percent of the individual 24-hour values should be reported in any sampling period." U.S. Environmental Protection Agency. *Ambient Monitoring Guidelines for Prevention of Significant Deterioration (PSD)*. Office of Air Quality Planning and Standards, Research Triangle Park, NC. EPA-450/4-87-007. May 1987.

5.4 NETWORK DESIGN

Appendix D of 40 CFR Part 58 provides general criteria for establishing SLAMS networks and for selecting new monitoring stations. EPA employs these criteria in evaluating the adequacy of SLAMS networks.

In general, SLAMS networks should be designed to comply with four basic monitoring objectives:[1]

1. To determine the highest concentrations expected to occur in the area encompassed by the network

2. To determine representative concentrations in areas of high population density

3. To determine the impacts on ambient pollution levels of significant sources or source categories

4. To determine general background levels

Proper siting of a monitoring station requires exact specification of the monitoring objective and commonly involves a definition of a spatial scale of representativeness.[2] Appendix D states that the goal in siting monitoring stations is to correctly match the spatial scale that the sample of monitored air represents with the spatial scale most appropriate for the monitoring objective of the station.[3] The most important spatial scales represented for PM-10 SLAMS monitoring networks are the micro, middle and neighborhood scales. For establishing SLAMS networks to represent large homogeneous areas other than the above scales of representativeness, urban or regional scales would also be needed.[4] It should be noted that in order for States to use receptor modeling for control strategy demonstrations, the following considerations pertaining to spatial scales of representativeness in network design must be addressed:[5]

- PM-10 monitoring networks must be designed in order to monitor the maximum air quality impacts from the predominant sources (*i.e.*, around 90 percent) and source categories in the PM-10 emissions inventory

- For ambient impacts of PM-10 emissions from anti-skid materials used in road surfaces, the PM-10 monitoring networks must be designed in accordance with EPA's monitoring guidance and spatially representative of the maximum air quality impacts from that source category

- In situations where the 24-hour NAAQS is controlling, monitoring networks must collect samples at such frequent intervals which ensure that emissions impacts from the predominant sources are being monitored adequately

In addition to Appendix D, further information pertaining to designing PM-10 networks and siting ambient samplers is contained in *Network Design and Optimum Site Exposure Criteria for Particulate Matter.*[6] Questions and answers pertaining to ambient monitoring network design for PM-10 are contained in *Response to Questions Regarding PM-10 State Implementation Plan (SIP) Development.*[7]

In designing ambient monitoring networks under PSD regulations, such factors as topography, climatology, population, and existing emission sources must be considered; therefore, the ultimate design of the network will be determined on a case-by-case basis by the permitting authority.[8] In general, ambient networks under PSD are designed during a preconstruction phase and a post-construction phase. For both the preconstruction phase and the post-construction phase, the number and location of monitors will be determined through appropriate dispersion modeling techniques. In addition, the number of monitors will depend on the expected spatial variability of the pollutant in the area being studied (*i.e.*, the higher the spatial variability of the pollutant under study, the greater the number of monitors needed in that area).[9]

During the preconstruction phase, the monitors should be (1) located in the area of maximum concentration increase expected from the proposed source or modification; (2) located in the area of the maximum expected concentrations from emissions of existing sources; and (3) located in the area of maximum impact of the pollutant from the combination effect of existing sources and the proposed source or modification. In most multisource settings, one to four sites would be sufficient. For remote settings (*i.e.*, in areas with no significant existing sources), a minimum number of monitors would need to be located (*i.e.*, one or two at the most). Where industrial process fugitive particulate emissions are involved,

a monitor should be located at the proposed source site and a downwind location would also need to be sited if stack emissions are also involved.[10]

For the postconstruction phase, two or three sites would probably be sufficient for most situations involving multi-source areas. For remote areas, one or two sites would be sufficient.[11]

Appendix B of 40 CFR Part 58 specifies the minimum quality assurance requirements for controlling and assessing the quality of the PSD ambient air monitoring data submitted to EPA by organizations operating a network of PSD stations. One requirement is that for a given organization's monitoring network, one sampling site ought to have collocated samplers.[12] For each pair of collocated samplers, one sampler will be designated as the sampler to be used to report air quality for the site and the second sampler will be designated as the duplicate sampler. The difference in measured concentration between each pair of collocated samplers will be used to calculate precision of the PM-10 manual method.[12]

Monitors should be located in areas which satisfy the definition of ambient air. According to 40 CFR 50.1(e), ambient air is defined as "that portion of the atmosphere, external to buildings, to which the general public has access." The definition of Ambient Air as well as related issues such as location and time aspects, public access, PSD considerations, and land acquisition are discussed in detail in Section 3.2 of this document. In situations where modeled locations are in areas excluded from the ambient air, the monitors should be located downwind at the boundary of that area.[13]

REFERENCES FOR SECTION 5.4

1. "The network of stations which comprise SLAMS should be designed to meet a minimum of four basic monitoring objectives. These basic objectives are: (1) To determine highest concentrations expected to occur in the area covered by the network; (2) to determine representative concentrations in areas of high population density; (3) to determine the impact on ambient pollution levels of significant sources or source categories; and (4) to determine general background concentration levels." U.S. Environmental Protection Agency. *Code of Federal Regulations*. Title 40. Part 58, Appendix D. "Network Design for State and Local Air Monitoring Stations (SLAMS) and National Air Monitoring Stations (NAMS)" 1. SLAMS Monitoring Objectives and Spatial Scales. July 1, 1990.

2. "Proper siting of a monitoring station requires precise specification of the monitoring objective which usually includes a desired spatial scale of representativeness." U.S. Environmental Protection Agency. *Code of Federal Regulations*. Title 40, Chapter I, Subchapter C, Part 58, Appendix D. "Network Design for State and Local Air Monitoring Stations (SLAMS) and National Air Monitoring Stations (NAMS)" 1. SLAMS Monitoring Objectives and Spatial Scales. July 1, 1990.

3. "The goal in siting stations is to correctly match the spatial scale represented by the sample of monitored air with the spatial scale most appropriate for the monitoring objective of the station." U.S. Environmental Protection Agency. *Code of Federal Regulations*. Title 40, Chapter I, Subchapter C, Part 58, Appendix D. "Network Design for State and Local Air Monitoring Stations (SLAMS) and National Air Monitoring Stations (NAMS)" 1. SLAMS Monitoring Objectives and Spatial Scales. July 1, 1990.

4. "The most important spatial scales to effectively characterize the emissions of PM-10 from both mobile and stationary sources are the micro, middle, and neighborhood scales. For purposes of establishing monitoring stations to represent large homogeneous areas other than the above scales of representativeness, urban or regional scale stations would also be needed." U.S. Environmental Protection Agency. *Code of Federal Regulations*. Title 40, Chapter I, Subchapter C, Part 58, Appendix D. "Network Design for State and Local Air Monitoring Stations (SLAMS) and National Air Monitoring Stations (NAMS)" 2.7 Lead. July 1, 1990.

5. "The PM-10 monitoring network must be representative of the maximum air quality impacts from the predominant (*i.e.*, generally on the order of 90 percent) sources and source categories in the PM-10 emission inventory . . . In a few areas, emissions of antiskid materials from a small number of road surfaces constitute the predominant PM-10 source category. These emissions should be uniformly distributed along these road surfaces. The monitoring network must be shown to be in accordance with EPA's monitoring guidance and spatially representative of the maximum air quality

impact from this source category . . . If the 24-hour NAAQS is controlling, the network must have samples collected at sufficiently frequent intervals to ensure that the impacts from the governing emission sources are adequately monitored." Memorandum. Bauman, Robert D., Chief, SO_2/Particulate Matter Programs, Branch, U.S. EPA, and Joseph A. Tikvart, Chief, Source Receptor Analysis Branch, U.S. EPA, to Chief, Air Branch, U.S. EPA. Regions I-X. PM-10 SIP Demonstration for Small Isolated Areas with Spatially Uniform Emissions. July 5, 1990.

6. U.S. Environmental Protection Agency. *Network Design and Optimum Site Exposure Criteria for Particulate Matter.* Office of Air Quality Planning and Standards. Research Triangle Park, N.C. EPA-450/4-87-009. May 1987.

7. U.S. Environmental Protection Agency. *Responses to Questions Regarding PM-10 State Implementation Plan (SIP) Development.* Office of Air Quality Planning and Standards, Research Triangle Park, N.C. June 1988.

8. "3.1 Network Design. The design of a network for criteria and noncriteria pollutants will be affected by many factors such as topography, climatology, population, and existing sources. Therefore, the ultimate design of a network for PSD purposes must be decided on a case-by-case basis by the permit granting authority." U.S. Environmental Protection Agency. *Ambient Monitoring Guidelines for Prevention of Significant Deterioration (PSD).* Office of Air Quality Planning and Standards, Research Triangle Park, NC. EPA-450/4-87-007. May 1987.

9. "3.2.2. As discussed above for preconstruction monitoring, appropriate dispersion modeling techniques are used to estimate the location of the air quality impact of the new source or modification. Monitors should then be placed at (a) the expected area of the maximum concentrations from the new source or modification, and (b) the maximum impact area(s), *i.e.*, where the maximum pollutant concentration will occur based on the combined effect of existing sources and the new source or modification . . . 3.2 Number and Location of Monitors...Generally, the number of monitors will be higher where the expected spatial variability of the pollutant in the area(s) of study is higher." U.S. Environmental Protection Agency. *Ambient Monitoring Guidelines for Prevention of Significant Deterioration (PSD).* Office of Air Quality Planning and Standards, Research Triangle Park, NC. EPA-450/4-87-007. May 1987.

10. "3.2.1 Preconstruction Phase . . . This would provide sufficient information for the applicant to place a monitor at (a) the location(s) of the maximum concentration increase expected from the proposed source or modification, (b) the location(s) of the maximum air pollutant concentration from existing sources of emissions, and (c) the location(s) of the maximum impact area, *i.e.*, where the maximum pollutant concentration would hypothetically occur based on the combination effect of existing sources and the proposed new source or modification . . . Generally, one to four sites would cover most situations in multisource settings. For remote areas in which the permit granting authority has determined that there are no significant existing sources, a minimum number of monitors would be needed, *i.e.*, one or probably two at the

most . . . When industrial process fugitive particulate emissions are involved, the applicant should locate a monitor at the proposed source site. If stack emissions are also involved, a downwind location should also be selected." U.S. Environmental Protection Agency. *Ambient Monitoring Guidelines for Prevention of Significant Deterioration (PSD).* Office of Air Quality Planning and Standards, Research Triangle Park, NC. EPA-450/4-87-007. May 1987.

11. "3.2.2 Postconstruction Phase . . . Generally, two or three sites would be sufficient for most situations in multisource areas. In remote areas where there are no significant existing sources, one or two sites would be sufficient." U.S. Environmental Protection Agency. *Ambient Monitoring Guidelines for Prevention of Significant Deterioration (PSD).* Office of Air Quality Planning and Standards, Research Triangle Park, NC. EPA-450/4-87-007. May 1987.

12. "3.3.1 TSP and PM-10 Methods . . . A site with the highest expected 24-hour pollutant concentration must be selected. The two samplers must be within 4 meters of each other but at least 2 meters apart to preclude airflow interference. The collocated samplers must be operated as a minimum every third day when continuous sampling is used. When a less frequent sample schedule is used, the collocated samplers must be operated at least once each week." U.S. Environmental Protection Agency. *Code of Federal Regulations.* Title 40, Chapter I, Subchapter C, Part 58, Appendix B. "Quality Assurance Requirements for Prevention of Significant Deterioration (PSD) Air Monitoring." 3.3 Precision of Manual Methods. July 1, 1992.

13. "3.2.3 Special Concerns for Location of Monitors . . . However, monitors should be placed in those locations satisfying the definition of ambient air. Ambient air is defined in 40 CFR 50.1(e) as "that portion of the atmosphere, external to buildings, to which the general public has access." Therefore, if the modeled locations are within an area excluded from ambient air, the monitors should be located downwind at the boundary of that area." U.S. Environmental Protection Agency. *Ambient Monitoring Guidelines for Prevention of Significant Deterioration (PSD).* Office of Air Quality Planning and Standards, Research Triangle Park, NC. EPA-450/4-87-007. May 1987.

5.5 PROBE SITING CRITERIA

The criteria for determining the correct siting of PM-10 samplers are discussed in Appendix E of 40 CFR Part 58.[1] The criteria are similar to the previous siting criteria for high-volume samplers used in the TSP networks. The new criteria for PM-10 networks include microscale stations which were not previously required for the TSP SLAMS networks.[2]

For the microscale stations, an inlet height of 2 to 7 meters is specified. For all other scales, the inlet height for PM-10 stations is 2 to 15 meters. Spacing requirements from roadways as specified in Part 58, Appendix E are as follows:[3]

- Microscale stations - 5 to 15 meters from major roadways
- Middle, neighborhood, and urban scale stations - a range of separation distances are specified for each as a function of traffic volume and the scale of representativeness. (This range of separation distances is contained in Appendix E of Part 58, section 8, Figure 2.)

When placed on the tops of buildings, samplers must be located at least 2 meters from walls, with no furnace or incineration flues nearby. The samplers should be placed at least 20 meters from trees and must be 10 meters from the drop line when the tree(s) acts as an obstruction. The sampler must be located away from obstacles such as buildings, so that the distance between obstacles and the samplers is at least twice the height that the obstacle protrudes above the sampler, except for street canyons sites. Except for street canyon sites, there must be unrestricted airflow in an arc of at least 270 degrees around the sampler.[4]

These criteria must be adhered to as strictly as possible. In the event that the siting criteria cannot be met, a written request for a waiver must be made justifying the differences in the proposed siting criteria.[5] Section 10 of Appendix E gives the conditions under which EPA would consider an application for waiver from these siting criteria.

The criteria for determining the correct siting of ambient PM-10 samplers under PSD regulations are the same as those contained in Appendix E to Part 58 with the exception that there are no requirements pertaining to considerations regarding scales of representativeness when locating the sampler inlet.[6]

REFERENCES FOR SECTION 5.5

1. U.S. Environmental Protection Agency. *Code of Federal Regulations*. Title 40, Chapter I, Subchapter C, Part 58, Appendix E. "Probe Siting Criteria for Ambient Air Quality Monitoring."8. Particulate Matter (PM-10). July 1, 1992.

2. "3.2.6 Sampler Inlet Siting...The new criteria for the PM-10 SLAMS include microscale stations which were not previously included for the TSP SLAMS network." U.S. Environmental Protection Agency. *PM-10 SIP Development Guideline*. EPA-450/2-86-001. June 1987.

3. "3.2.6 Sampler Inlet Siting...An inlet height of 2 to 7 meters is specified for PM-10 microscale stations. The inlet height for all other scales for PM-10 stations is 2 to 15 meters as it was previously for all TSP SLAMS. The spacing requirement from roadways is also different. For microscale roadway stations, the PM-10 sampler must be between 5 to 15 meters from major roadways. For middle, neighborhood, and urban scale PM-10 stations a range of separation distances are specified for each as a function of traffic volume and the scale of representativeness." U.S. Environmental Protection Agency. *PM-10 SIP Development Guideline*. EPA-450/2-86-001. June 1987.

4. "If the sampler is located on a roof or other structure, then there must be a minimum of 2 meters separation from walls, parapets, penthouses, etc. No furnace or incineration flues should be nearby...Therefore, the sampler should be placed at least 20 meters from the dripline and must be 10 meters from the dripline when the tree(s) acts as an obstruction. The sampler must also be located away from obstacles such as buildings, so that the distance between obstacles and the sampler is at least twice the height that the obstacle protrudes above the sampler except for street canyon sites...There must be unrestricted airflow in an arc of at least 270^0 around the sampler except for street canyon sites." U.S. Environmental Protection Agency. *Code of Federal Regulations*. Title 40, Chapter I, Subchapter C, Part 58, Appendix E. "Probe Siting Criteria for Ambient Air Quality Monitoring."8.2 Spacing From Obstructions. July 1, 1992.

5. "The probe siting criteria as discussed below must be followed to the maximum extent possible. It is recognized that there may be situations when the probe siting criteria cannot be followed. If the siting criteria cannot be met, this must be thoroughly documented with a written request for a waiver which describes how and why the siting criteria differ." U.S. Environmental Protection Agency. *Code of Federal Regulations*. Title 40, Chapter I, Subchapter C, Part 58, Appendix E. "Probe Siting Criteria for Ambient Air Quality Monitoring." 1. Introduction. July 1, 1992.

6. U.S. Environmental Protection Agency. *Ambient Monitoring Guidelines for Prevention of Significant Deterioration (PSD).* Office of Air Quality Planning and Standards, Research Triangle Park, NC. EPA-450/4-87-007. May 1987. Section 3.3.2.

5.6 EPISODE MONITORING

Episode contingency plans are used to prevent air pollution levels from reaching levels which would cause imminent and substantial endangerment to the health of the general public.[1] Such plans are required pursuant to section 110(a)(2)(g) of the amended Act. Classification of regions required to have air pollution episode contingency plans is discussed in 40 CFR Part 51 Subpart H. The definition of an air quality emergency and the level of PM-10 associated with it are defined in Appendix L of Part 51. In general, 40 CFR Part 51.152 states that each State contingency plan must satisfy the following:[2]

- Specify two or more stages of episode criteria, as set forth in Appendix L, or their equivalent
- Provide for public announcement whenever any episode stage has been determined to exist
- Specify adequate emission control actions to implement at each episode stage

Section 4.0 of Appendix C of Part 58 describes the sampling procedures to be used for determining air quality levels during air pollution episodes.[3] These procedures are further described in *Guideline for PM-10 Episode Monitoring Methods*.[4] In general, two methods based on the filtration principle are recommended. They are the staggered sampling procedure and the short-term interval sampling method. The staggered sampling procedure uses a 24-hour sampling procedure followed by a 2-hour post sampling filter equilibration period. The short-term interval sampling method requires a 4-hour sampling period followed by a 2-hour filter equilibration period. In addition to these two procedures, other methods may be used provided the user demonstrates a site-specific correlation of the alternative method with the reference method.[5]

REFERENCES FOR SECTION 5.6

1. "The example regulations presented herein reflect generally recognized ways of preventing air pollution from reaching levels that would cause imminent and substantial endangerment to the health of persons." U.S. Environmental Protection Agency. *Code of Federal Regulations*. Title 40, Chapter I, Subchapter C, Part 51, Appendix L. July 1, 1991.

2. "(a) Each contingency plan must - (1) Specify two or more stages of episode criteria such as those set forth in Appendix L to this Part, or their equivalent; (2) Provide for public announcement whenever any episode stage has been determined to exist; and (3) Specify adequate emission control actions to be taken at each episode stage." U.S. Environmental Protection Agency. *Code of Federal Regulations.* Title 40, Chapter I, Subchapter C, Part 51.52. July 1, 1991.

3. "4.1. For short-term measurements of PM-10 during air pollution episodes the measurement method must be: 4.1.1 Either the "Staggered PM-10" method or the "PM-10 Sampling Over Short Sampling Times" method, both of which are based on the reference method for PM-10...4.1.2 Any other method for measuring PM-10: 4.1.2.1 Which has a measurement range or ranges appropriate to accurately measure air pollution episode concentration of PM-10, 4.1.2.2 Which has a sample period appropriate for short term PM-10 measurements, and 4.1.2.3 For which a quantitative relationship to a reference or equivalent method for PM-10 has been established at the use site." U.S. Environmental Protection Agency. *Code of Federal Regulations*. Title 40, Chapter I, Subchapter C, Part 58, Appendix C. "Ambient Air Quality Monitoring Methodology." 4.0 Particulate Matter Episode Monitoring. July 1, 1992.

4. U.S. Environmental Protection Agency. *Guideline for PM-10 Episode Monitoring Methods*. EPA-450/4-83-005, February 1985.

5. "3.3.3 Episode Monitoring...Briefly, two methods based on the filtration principle are recommended: staggered PM-10 sampling and short-term interval sampling. The staggered sampling procedure uses a 24-hour sampling procedure followed by a 2-hour post-sampling filter equilibration period. The short-term interval sampling method requires a 4-hour sampling period followed by a 2-hour filter equilibration period. In addition to these two procedures, other methods may be used provided the user demonstrates a site-specific correlation of the alternative method with the reference method." U.S. Environmental Protection Agency. *PM-10 SIP Development Guideline*. EPA-450/2-86-001. June 1987.

5.7 AMBIENT AIR QUALITY DATA REPORTING

5.7.1 General

States are required to submit an annual report of all the ambient air quality monitoring data from their SLAMS networks (40 CFR Part 58.26). These annual summaries must contain, as a minimum, the following:[1]

- The annual arithmetic mean ($\mu g/m^3$) as specified in Appendix K of Part 50
- All daily PM-10 values above the level of the 24-hour NAAQS and dates of occurrence
- The sampling schedule, used such as once every six days, once every three days, etc.
- The number of additional sampling days beyond the sampling schedule used
- The number of 24-hour average concentrations in the ranges as specified in section 2.7 of Appendix F
- The location, date, pollution source, and duration during which ambient levels of a pollutant reached or exceeded the level of PM-10 specified by 40 CFR Part 51.16(a) as a level which could cause significant harm to the health of the general public
- A certification of accuracy by the State's senior air pollution control officer or his designee

Part 58.26 requires that the annual report be submitted by July 1 of each year for data collected from January 1 to December 31 of the previous year. In addition, the States are required to submit, upon Regional Administrator request, all or part of SLAMS data.[2] As a subset of the SLAMS network, NAMS data are required, under Part 58.35, to be reported quarterly and within 120 days of the end of a quarter.[3]

In addition to the annual SLAMS reporting requirements, section 4.0 of Appendix A of 40 CFR Part 58 requires that the results of all valid precision and accuracy tests be reported to AIRS via the appropriate EPA Regional Office within 120 calendar days after the end of each calendar quarter. The report should include the results of all collocated measurements including those falling below the levels specified in section 5.3.1 of Appendix A (*e.g.*, 20 $\mu g/m^3$ for PM-10). Data from invalid tests, from tests performed during a period

of time for which ambient data immediately prior or subsequent to the tests were invalidated for appropriate reasons, and from tests of methods or analyzers not approved for SLAMS network use under Appendix C of Part 58, should not be reported.[4]

5.7.2 Air Pollution Index

Appendix G of 40 CFR Part 58 requires States to report a daily air quality index to the general public through some prominent means (*e.g.*, radio, television, newspaper) and in accordance with the procedures contained in Appendix G.[5,6] This index provides the general public with an idea of how healthy the ambient air is on a particular day. The air quality index is required to be reported for all urban areas with populations exceeding 200,000 (based on the most current decennial U.S. Census of Population Report).[5]

5.7.3 Exceptional Events

High ambient values of PM-10 may be flagged by the State due to exceptional events. According to 40 CFR Part 50, Appendix K, an exceptional event is an uncontrollable event caused by natural sources of particulate matter or an event that is not expected to recur at a given location.[7] The use of ambient monitoring data which include exceptional events data could result in inappropriate estimates of the expected annual value as outlined in Appendix K of Part 50.[8] As such, EPA has provided criteria and procedures for flagging such exceptional events in the *Guideline on the Identification and Use of Air Quality Data Affected by Exceptional Events.*[9] However, because of new waiver provisions in section 188(f) of the amended Act, which, in effect modify aspects of the exceptional events guidelines, the reader should consult EPA headquarters at the address provided in Section 1.0 of this document before using the exceptional events guidelines.

In general, EPA recognizes 17 exceptional events flags applicable to PM-10. These flags are described in the *Exceptional Events* guideline document. States and local agencies are responsible for the identification and documentation of ambient PM-10 air quality data influenced by exceptional events. The State/local agency must also provide background information in support of such determinations and this information must be submitted to the appropriate EPA Regional Office for concurrence and must be made available for public

review. Decisions on how flagged data are used for a specific purpose (*e.g.*, attainment designation/demonstration, control strategy, etc.) are made on a case-by-case basis.[10]

Appendix K of Part 50 describes the procedure for making the necessary adjustments for exceptional events and trends when estimating the number of exceedances for a single year. Questions and answers pertaining to exceptional events are contained in *Response to Questions Regarding PM-10 State Implementation Plan (SIP) Development.*[11]

Other statutory requirements and EPA policy related to nonanthropogenic and/or uncontrollable PM-10 emissions include the section 188(f) waiver provisions under which EPA may waive any requirement applicable to any serious area where EPA determines that anthropogenic sources of PM-10 do not contribute significantly to the violation of the PM-10 standard in the area. EPA may also waive a specific attainment date where the Agency determines that nonanthropogenic sources contribute significantly to the violation of the PM-10 standard in the area. Other related statutory requirements include the section 179B provisions relating to exemptions for States which submit plans that demonstrate attainment or maintenance of the PM-10 NAAQS, but for emissions emanating from outside the United States. These requirements are discussed in more detail in Section 9.2 of this guideline.

REFERENCES FOR SECTION 5.7

1. U.S. Environmental Protection Agency. *Code of Federal Regulations.* Title 40, Chapter I, Subchapter C, Part 58.26, and Appendix F 2.7.1 and 2.7.2. July 1, 1990.

2. "The State shall submit all or a portion of the SLAMS data to the Regional Administrator upon his request. U.S. Environmental Protection Agency. *Code of Federal Regulations.* Title 40. Part 58.28. "Regional Office SLAMS data Acquisition." July 1, 1992.

3. "(b) The State shall report quarterly to the Administrator (through the appropriate Regional Office) all ambient air quality data and information...(c) The quarterly report must: (1) Be received by the National Aerometric Data Bank within 120 days of the end of each reporting period, after being submitted by the States to the Regional Offices for review; (2) Contain all data and information gathered during the reporting period." U.S. Environmental Protection Agency. *Code of Federal Regulations.* Title 40, Chapter I, Subchapter C, Part 58.35. "NAMS Data Submittal." July 1, 1992.

4. U.S. Environmental Protection Agency. *Code of Federal Regulations.* Title 40, Chapter I, Subchapter C, Part 58, Appendix A 4.1. July 1, 1991.

5. "(a) The State shall report to the general public on a daily basis through prominent notice an air quality index in accordance with the requirements of Appendix G to this part. (b) Reporting must commence...for all urban areas with a population exceeding 200,000. (c) The population of an urban area for purposes of index reporting is the most recent U.S. census population figure as defined in 58.1 of paragraph (s)." U.S. Environmental Protection Agency. *Code of Federal Regulations.* Title 40, Chapter I, Subchapter C, Part 58.40. July 1, 1991.

6. "Prominent public notification consists of at a minimum: (1) Furnishing the daily report to one or more of the appropriate news media (radio, television, newspapers); and (2) making the daily index report publicly available at one or more places of public access. Index reports may also be disseminated by means of recorded messages" U.S. Environmental Protection Agency. *Code of Federal Regulations.* Title 40, Chapter I, Subchapter C, Part 58, Appendix G 6. July 1, 1991.

7. "An exceptional event is an uncontrollable event caused by natural sources of particulate matter or an event that is not expected to recur at a given location." U.S. Environmental Protection Agency. *Code of Federal Regulations.* Title 40, Chapter I, Subchapter C, Part 50, Appendix K 2.4. July 1, 1991.

8. "Inclusion of such a value in the computation of exceedances or averages could result in inappropriate estimates of their respective expected annual values." U.S.

Environmental Protection Agency. *Code of Federal Regulations*. Title 40, Chapter I, Subchapter C, Part 50, Appendix K 2.4. July 1, 1991.

9. U.S. Environmental Protection Agency. *Guideline on the Identification and Use of Air Quality Data Affected by Exceptional Events*. EPA-450/4-86-007. July 1986.

10. "Under this system, the State and local agency is responsible for identifying and documenting data influenced by exceptional events. Background information in support of this determination must then be submitted to the appropriate EPA Regional Office for concurrence and must also be available for public review. Decisions on how flagged data are used for a specific purpose (attainment designation, control strategy, etc.) are made on a case-by-case basis." U.S. Environmental Protection Agency. *Guidance for Completing the USEPA PM-10 Exceedance Report (draft)*. Office of Air Quality Planning and Standards. Research Triangle Park, N.C. May 1991. Section 5.0.

11. U.S. Environmental Protection Agency. *Responses to Questions Regarding PM-10 State Implementation Plan (SIP) Development*. Office of Air Quality Planning and Standards, Research Triangle Park, N.C. June 1988.

6.0 AIR QUALITY MODELING

6.1 GENERAL

Air quality modeling analyses are performed to demonstrate that a proposed control strategy provides for attainment and maintenance of the NAAQS (40 CFR 51.112a) and protection of the PSD increments (40 CFR 51.166l). SIP submittals must include a description of how the modeling analysis was conducted by providing information on the models used; the justification of model selection; the modes of models used; assumptions involved in model application; the meteorological data; ambient monitoring data used; the justification of off-site data, if used; the model input data; and the model output data.[1]

In certain cases, a modified demonstration may be used in place of a full SIP demonstration, as required in current guidance for the initial moderate PM-10 nonattainment areas, (*i.e.*, those areas, by operation of law, designated nonattainment upon enactment of the Clean Air Act Amendments of 1990 and classified as moderate upon enactment). For those areas, EPA stated that modified demonstrations may be made in those situations where time constraints, inadequate resources, inadequate data bases, lack of a model for some unique situations, and other unavoidable circumstances leave an area unable to submit an attainment demonstration within the short timeframe provided by the 1990 amendments (*i.e.*, by November 15, 1991). With regard to modeling requirements, all modified demonstrations should be accompanied by documentation of the modified modeling method, rationale for the modified demonstration, and justification of the modified demonstration.[2] Demonstrations based on this policy will be considered on a case-by-case basis.[3]

REFERENCES FOR SECTION 6.1

1. "(e) Modeling information required to support the proposed revision, including input data, output data, models used, justification of model selections, ambient monitoring data used, meteorological data used, justification for use of offsite data (where used), modes of models used, assumptions, and other information relevant to the determination of adequacy of the modeling analysis." Appendix V. "Criteria for Determining the Completeness of Plan Submissions." 54 Federal Register 2,138-41 (January 19, 1989), State Implementation Plan Completeness Review.

2. "Generally , all SIP submittals for the initial moderate PM-10 nonattainment areas should follow the existing guidance on PM-10 modeling as noted above. In the situation where an area has completed or can complete its demonstration by November 15, 1991 consistent with existing guidance, an attainment demonstration based on the existing guidance should be submitted. However, in those situations where time constraints, inadequate resources, inadequate data bases, lack of a model for some unique situations, and other unavoidable circumstances would leave an area unable to submit an attainment demonstration within the short timeframe provided by the newly revised law, then a modified demonstration based on the policy statement may be submitted. Section 189(a)(1)(B) of the recently revised Clean Air Act requires that all modified demonstrations be based on some form of 'air quality modeling.' In addition, 40 CFR §51.112 requires that a demonstration be shown to be 'adequate and appropriate.' This supplemental policy is issued in accordance with these statutory and regulatory requirements.

   All such modified demonstrations should be accompanied by the following:
   1. Documentation of Modified Modeling Method. Documentation of the procedures or analyses used in lieu of those set forth in the previously issued guidance.

   2. Rationale for Modified Demonstration. An explanation of why the alternative modeling techniques set forth in the guidance were not used.

   3. Justification of Modified Demonstration. A description of how and why the SIP provides an adequate and appropriate demonstration of areawide attainment."

   Memorandum. Calcagni, John, Director, Air Quality Management Division, Research Triangle Park, N.C., and Laxton, William G., Director, Technical Support Division, U .S. EPA, Research Triangle Park, N.C., to Director, Air Pesticides and Toxics Management Division, Regions I, IV, VI; Director, Air and Waste Management Division, Region II; Director, Air Management Division, Regions III and IX; Director, Air and Radiation Division, Region V; Director, Air and Toxics Division, Regions VII,

VIII, X. PM-10 SIP Attainment Demonstration Policy for Initial Moderate Nonattainment Areas. March 4, 1991.

3. "Demonstrations based on this policy will be considered on a case-by-case basis. The policy applies only to those initial moderate PM-10 nonattainment areas which have completed the technical analysis for their SIP submittal and have made a good-faith effort to submit a final SIP by their November 15, 1991 due date." Memorandum. Calcagni, John, Director, Air Quality Management Division, U.S. EPA, Research Triangle Park, N.C., and Laxton, William G., Director, Technical Support Division, U.S. EPA, Research Triangle Park, N.C., to Director, Air Pesticides and Toxics Management Division, Regions I, IV, VI; Director, Air and Waste Management Division, Region II; Director, Air Management Division, Regions III and IX; Director, Air and Radiation Division, Region V; Director, Air and Toxics Division, Regions VII, VIII, X. PM-10 SIP Attainment Demonstration Policy for Initial Moderate Nonattainment Areas. March 4, 1991.

6.2 GUIDANCE ON AIR QUALITY MODELS

Air quality dispersion modeling techniques appropriate for use in SIP, New Source Review (NSR), and PSD analyses are specified in the *Guideline On Air Quality Models (Revised)* and Supplement A (Guideline).[1,2] The Guideline is a primary source of information on the proper selection and regulatory application of dispersion models. Announcements of proposed and final revisions to the Guideline are made in the Federal Register as needed.

Refined dispersion models are generally recommended for PM-10 regulatory application; however, modeling demonstrations may, in some instances, include receptor modeling, and combined dispersion and receptor modeling.[3] Guidance on when and how these various techniques may be applied is provided in the *PM-10 SIP Development Guideline*.[4] Guidance for model reconciliation,[5] and an example model application,[6] are available to assist in PM-10 modeling analyses and control strategy development. The *Receptor Model Technical Series (Volumes I - VI)*[7] provides substantial additional guidance on the theory and application of receptor-oriented techniques.

Clarifications and interpretations of modeling procedures become official EPA guidance through several courses of action: (1) the procedures are published as regulations or guidelines; (2) the procedures are formally transmitted as guidance to Regional Office managers; (3) the procedures are formally transmitted as guidance to Regional Modeling Contacts as a result of a Regional consensus on technical issues; or (4) the procedures are a result of decisions by the Model Clearinghouse that effectively establish a national precedent.[8] The Model Clearinghouse is the single EPA focal point for the review of criteria pollutant modeling techniques for specific regulatory applications.[9] The Clearinghouse serves a major role in promoting fairness and consistency in modeling decisions that deviate from the established modeling guidance.[10] Model Clearinghouse memoranda involving significant decisions with respect to interpretation of modeling guidance are available on the Support Center for Regulatory Air Models Electronic Bulletin Board.[11]

The time at which changes in modeling guidance affect modeling analyses in progress will depend on the type of agreement under which those analyses are being conducted.[12] Normally, ongoing analyses will be grandfathered if there is a written protocol with a legal or regulatory basis or if the analysis is complete and regulatory action is imminent or underway.[13]

REFERENCES FOR SECTION 6.2

1. "This guideline recommends air quality modeling techniques that should be applied to State Implementation Plan (SIP) revisions for existing sources and to new source reviews, including prevention of significant deterioration (PSD)." U.S. Environmental Protection Agency. *Guideline On Air Quality Models (Revised)*, Office of Air Quality Planning and Standards, Research Triangle Park, NC. EPA-450/2-78-027R. July 1986. p. 1-1.

2. U.S. Environmental Protection Agency. *Supplement A to the Guideline On Air Quality Models (Revised).* Office of Air Quality Planning and Standards, Research Triangle Park, NC. EPA-450/2-78-027R. July 1987.

3. U.S. Environmental Protection Agency. *Guideline On Air Quality Models (Revised)*, Office of Air Quality Planning and Standards, Research Triangle Park, NC. EPA-450/2-78-027R. July 1986. p. 7-4.

4. U.S. Environmental Protection Agency. *PM-10 SIP Development Guideline*, Office of Air Quality Planning and Standards, Research Triangle Park, NC. EPA-450/2-86-001. June 1987. pp. 4-1 through 4-14.

5. U.S. Environmental Protection Agency. *Protocol for Reconciling Differences Among Receptor and Dispersions Models.* EPA-450/4-87-008, 1987.

6. U.S. Environmental Protection Agency. *Example Modeling to Illustrate SIP Development for the PM-10 NAAQS.* EPA-450/4-87-012, 1987.

7. U.S. Environmental Protection Agency. Receptor Model Technical Series (Vols. I - VI).

   - *Volume I: Overview of Receptor Model Application to Particulate Source Apportionment*, Office of Air Quality Planning and Standards, Research Triangle Park, NC. EPA-450/4-81-016a. July 1981.
   - *Volume II: Chemical Mass Balance*, Office of Air Quality Planning and Standards, Research Triangle Park, NC. EPA-450/4-81-016b. July 1981.
   - *Volume III (1989 Revision): CMB7 User's Manual*, Office of Air Quality Planning and Standards, Research Triangle Park, NC. EPA-450/4-90-004. January 1990.
   - *Volume IV: Summary of Particle Identification Techniques.* Office of Air Quality Planning and Standards, Research Triangle Park, NC. EPA-450/4-83-018. June 1983.
   - *Volume V: Source Apportionment Techniques and Considerations for Combining Their Use*, Office of Air Quality Planning and Standards, Research Triangle Park, NC. EPA-450/4-84-020. July 1984.

- *Volume VI: A Guide to the Use of Factor Analysis and Multiple Regression (FA/MR) Techniques in Source Apportionment*, Office of Air Quality Planning and Standards, Research Triangle Park, NC. EPA-450/4-85-007. June 1985.

8. "Changes in EPA modeling procedures become official Agency guidance when: (1) they are published as regulations or guidelines, (2) they are formally transmitted as guidance to Regional Office managers, (3) they are formally transmitted as guidance to Regional Modeling Contacts as the result of a Regional consensus on technical issues, or (4) they are a result of decisions by the Model Clearinghouse that effectively set a national precedent." Attachment 2 of memorandum from Tikvart, J.A., OAQPS, U.S. EPA, to Regional Modeling Contacts. January 2, 1985. (PN 110-85-01-02-070).

9. "The Model Clearinghouse is the single EPA focal point for reviewing the use of modeling techniques for criteria pollutants in specific regulatory applications." Memorandum from Tikvart, J.A., OAQPS, U.S. EPA, to Regional Chiefs, Air Branch Region VII, Technical Support Branch Region I, Air and Radiation Branch Region V, Air Programs Branch Regions II, III, IV, VI, VIII, IX, X. June 7, 1988.

10. "However, there is also a need to provide for a mechanism that promotes fairness and consistency in modeling decisions among the various Regional Offices and the States." Memorandum from Tikvart, J.A., OAQPS, U.S. EPA, to Regional Chiefs, Air Branch Region VII, Technical Support Branch Region I, Air and Radiation Branch Region V, Air Programs Branch Regions II, III, IV, VI, VIII, IX, X. June 7, 1988.

11. The Support Center for Regulatory Air Models (SCRAM) Electronic Bulletin Board, Office of Air Quality Planning and Standards, Research Triangle Park, NC 27711.

12. "(T)he time at which changes in modeling guidance affect on-going modeling analyses is a function of the type of agreement under which those analyses are being conducted." Attachment 2 of memorandum from Tikvart, J.A., OAQPS, U.S. EPA, to Regional Modeling Contacts. January 2, 1985. (PN 110-85-01-02-070).

13. "On-going analyses should normally be 'grandfathered' if (1) there is a written protocol with a legal or regulatory basis (such as the Lovett Power Plant) or (2) the analysis is complete and regulatory action is imminent or underway." Attachment 2 of memorandum from Tikvart, J.A., OAQPS, U.S. EPA, to Regional Modeling Contacts. January 2, 1985. (PN 110-85-01-02-070).

6.3 MODEL SELECTION

Models selected to provide estimates of ambient concentrations of PM-10 must be consistent with the requirements and guidelines specified in the *Guideline on Air Quality Models (Revised).*[1]

Two levels of model sophistication exist: screening and refined. Screening techniques are used initially to eliminate more extensive modeling if it is clearly established, through their application, that the proposed source or control strategy will not cause or contribute to ambient concentrations in excess of either the NAAQS or the allowable PSD increments.[2] Refined air quality models require more detailed and precise input data and consequently provide more accurate estimates of source impact. These refined models are used if a screening technique indicates that a concentration resulting from the source may cause or contribute to an exceedance of the PSD increment or the NAAQS.[3]

The refined model selected should be the one which most accurately represents atmospheric transport, dispersion, and chemical transformations in the area under analysis.[4] Models have been developed for both simple and complex terrain situations; some are designed for urban applications while others are designed for rural applications. In simple terrain, RAM is recommended for urban sources. CRSTER and MPTER are recommended, respectively for single and multiple sources (without downwash) in rural areas. ISCST is recommended for complex industrial sources (with or without downwash) in urban or rural areas. Separate recommendations are provided for areas with intermediate or complex terrain. No model recommended for general use at this time accounts for secondary particulate formation or other transformations in a manner suitable for SIP control strategy demonstrations.[5]

The use of receptor models in conjunction with dispersion models can help to more precisely characterize specific source contributions. Where possible, the use of combined dispersion and receptor modeling is encouraged.[6] The chemical mass balance (CMB) model is considered to be the most advanced of the available receptor models and its use is the most acceptable for attainment demonstration purposes. Other receptor-oriented techniques include factor analysis, and optical and scanning electron microscopy.[7]

Under certain conditions, there may be no recommended dispersion model, or the recommended model may not be applicable. For example, if area sources are the dominant contributors to ambient PM-10 concentrations, an attainment demonstration might be based on rollback of the apportionment derived from two reconciled receptor models. In such instances, the modeling approach must be approved by the appropriate Regional Office on a case-by-case basis.[8,9] Procedures for objectively evaluating alternative modeling techniques are discussed in the EPA documents, *Interim Procedures for Evaluating Air Quality Models (Revised)* and *Interim Procedures for Evaluating Air Quality Models: Experience with Implementation.*[10,11]

REFERENCES FOR SECTION 6.3

1. "(1) All estimates of ambient concentrations required under this paragraph shall be based on the applicable air quality models, data bases, and other requirements specified in the 'Guideline on Air Quality Models (Revised)' (1986) which is incorporated by reference." 51 Federal Register 32,178 (September 9, 1986), Requirements for Preparation Adoption and Submittal of Implementation Plans.

2. "The purpose of such techniques is to eliminate the need of further more detailed modeling for those sources that clearly will not cause or contribute to ambient concentrations in excess of either the National Ambient Air Quality Standards or the allowable prevention of significant deterioration concentration increments." U.S. Environmental Protection Agency. *Guideline On Air Quality Models (Revised).* Office of Air Quality Planning and Standards, Research Triangle Park, NC. EPA-450/2-78-027R. July 1986. p. 2-6.

3. "If a screening technique indicates that the concentration contributed by the source exceeds the PSD increment or the increment remaining to just meet the NAAQS, then the second level of more sophisticated models should be applied." U.S. Environmental Protection Agency. *Guideline On Air Quality Models (Revised).* Office of Air Quality Planning and Standards, Research Triangle Park, NC. EPA-450/2-78-027R. July 1986. p. 2-6.

4. "In all cases, the model applied to a given situation should be the one that provides the most accurate representation of atmospheric transport, dispersion, and chemical transformations in the area of interest." U.S. Environmental Protection Agency. *Guideline On Air Quality Models (Revised).* Office of Air Quality Planning and Standards, Research Triangle Park, NC. EPA-450/2-78-027R. July 1986. p. 1-3.

5. "For urban-wide refined analyses CDM 2.0 or RAM should be used. CRSTER and MPTER are recommended for point sources of small particles. For source-specific analyses of complicated sources, the ISC model is preferred. No model recommended for general use at this time accounts for secondary particulate formation or other transformations in a manner suitable for SIP control strategy demonstrations." U.S. Environmental Protection Agency. *Guideline On Air Quality Models (Revised).* Office of Air Quality Planning and Standards, Research Triangle Park, NC. EPA-450/2-78-027R. July 1986. p. 7-4

6. "Where possible, the use of receptor models in conjunction with dispersion models is encouraged to more precisely characterize the emissions inventory and to validate source-specific impacts calculated by the dispersion model." U.S. Environmental Protection Agency. *Guideline On Air Quality Models (Revised).* Office of Air Quality Planning and Standards, Research Triangle Park, NC. EPA-450/2-78-027R. July 1986. p. 7-4

7. "One key, overriding selection consideration is that CMB is considered the most advanced of the receptor models...The other methods include factor analysis (FA), automatic scanning electron microscopy (ASEM), and microscopy (OM)." U.S. Environmental Protection Agency. *PM-10 SIP Development Guideline*, Office of Air Quality Planning and Standards, Research Triangle Park, NC. EPA-450/2-86-001. June 1987. pp. 4-1 through 4-14.

8. "For those cases where no recommended technique is available or applicable, modeling approaches should be approved by the appropriate Regional Offices on a case-by-case basis." U.S. Environmental Protection Agency. *Guideline On Air Quality Models (Revised).* Office of Air Quality Planning and Standards, Research Triangle Park, NC. EPA-450/2-78-027R. July 1986. p. 7-4

9. "...This approach is an option provided for in sections 4 and 5 of the *PM-10 SIP Development Guideline.* While it is clear from the guideline that use of dispersion models in combination with receptor models is the preferred approach, in certain limited situations, the use of an RM demonstration alone may be adequate to demonstrate attainment. The State must obtain approval to use the RM demonstration prior to SIP submittal. The decision that an RM demonstration is adequate to demonstrate attainment is the responsibility of the Regional Office; however, the Region should consult the Model Clearinghouse for advice in making this determination." Memorandum. Bauman, Robert D. Chief, SO_2/Particulate Matter Programs Branch, U.S. EPA, Research Triangle Park, NC, and Joseph A. Tikvart, Chief, Source Receptor Analysis Branch, U.S. EPA, Research Triangle Park, NC, to Chief, Air Branch, Regions I-X. PM-10 SIP Demonstration for Small Isolated Areas with Spatially Uniform Emissions. July 5, 1990. (PN-110-90-07-05-106). p. 1.

10. U.S. Environmental Protection Agency. *Interim Procedures for Evaluating Air Quality Models (Revised).* Office of Air Quality Planning and Standards, Research Triangle Park, NC. EPA-450/4-84-023. September 1984.

11. U.S. Environmental Protection Agency. *Interim Procedures for Evaluating Air Quality Models: Experience with Implementation.* Office of Air Quality Planning and Standards. Research Triangle Park, NC. EPA-450/4-85-006. July 1985.

6.4 METEOROLOGICAL INPUT

Meteorological data used in air quality modeling should be spatially and climatologically (temporally) representative of the area of interest.[1] Use of site-specific data is preferred for air quality analyses provided that one year or more of quality-assured data are available.[2] Suggestions for the collection and use of on-site data are provided in the Guideline and in the EPA documents, *On-Site Meteorological Program Guidance for Regulatory Modeling Applications, Ambient Monitoring Guidelines for Prevention of Significant Deterioration (PSD)* and *Quality Assurance Handbook for Air Pollution Measurement Systems: Volume IV. Meteorological Measurements.*[3-5]

If one year of site-specific data is not available, five years of other representative meteorological data (ordinarily obtained from the nearest National Weather Service (NWS) station) may be used in the modeling analysis. These five years should be the most recent, readily available consecutive five years of data.[6] The five year period is defined to ensure that the model results adequately represent meteorological conditions conducive to the prediction of maximum ambient concentrations. Potential sources of representative meteorological data include the National Weather Service, local universities, the Federal Aviation Administration, military stations, and air quality agencies. Meteorological data collected by the National Weather Service may be obtained from the Support Center for Regulatory Air Models Electronic Bulletin Board.[7]

When modeling previously permitted sources whose emission limitations are based on a specific year of meteorological data, that year of data should be added to any longer period involved in the modeling analysis.[8]

Gaussian models do not address calm wind conditions. Ambient concentrations predicted by such models during calm conditions should not be considered valid.[9] Proper procedures for calculating average concentrations during calm wind conditions are provided in the Guideline. Some air quality models recommended in the Guideline include algorithms to identify periods of calm so that they may be dealt with separately.

As mentioned earlier, meteorological data collected on-site must be quality-assured prior to their application in air quality modeling analyses. At sites with collocated, continuous air quality monitors, the inspection, maintenance and calibration of each

meteorological instrument operated must be conducted to guarantee a minimum of 90 percent data retrieval (80 percent for remote sites).[10] At the initiation of the monitoring program, and at least every six months thereafter, routine system calibrations and audits should be performed.[11]

Meteorological audits, performed independently of the organization responsible for data collection and system maintenance, should be scheduled on a semiannual basis.[11] Aside from providing for on-site calibration of instruments, these independent evaluations should address network installation; inspection, maintenance and calibration procedures; data reduction procedures; and data logging and tabulation procedures.[12]

As recommended in the *Quality Assurance Handbook*, meteorological data validation can be conducted using a three-fold approach of initial hardcopy audit of the data followed by screening the data through a program designed to note and flag questionable values and finally passing the data through a comparison program which evaluates how well the data fit the synoptic conditions prevalent in the area of on-site measurement.

REFERENCES FOR SECTION 6.4

1. "The meteorological data used as input to a dispersion model should be selected on the basis of spatial and climatological (temporal) representativeness as well as the ability of the individual parameters selected to characterize the transport and dispersion conditions in the area of concern." U.S. Environmental Protection Agency. *Guideline On Air Quality Models (Revised).* Office of Air Quality Planning and Standards, Research Triangle Park, NC. EPA-450/2-78-027R. July 1986. p. 9-10.

2. "If one year or more, up to five years, of site-specific data is available, these data are preferred for use in air quality analyses." U.S. Environmental Protection Agency. *Guideline On Air Quality Models (Revised).* Office of Air Quality Planning and Standards, Research Triangle Park, NC. EPA-450/2-78-027R. July 1986. p. 9-12.

3. U.S. Environmental Protection Agency. *On-Site Meteorological Program Guidance for Regulatory Modeling Applications.* Office of Air Quality Planning and Standards, Research Triangle Park, NC. EPA-450/4-87-013. June 1987.

4. U.S. Environmental Protection Agency. *Ambient Monitoring Guidelines for Prevention of Significant Deterioration (PSD).* Office of Air Quality Planning and Standards, Research Triangle Park, NC. EPA-450/4-87-007. May 1987.

5. U.S. Environmental Protection Agency. *Quality Assurance Handbook for Air Pollution Measurement Systems: Volume IV. Meteorological Measurements.* Atmospheric Research and Exposure Assessment Laboratory, Research Triangle Park, NC. Office of Research and Development, EPA-600/4-90-003. September 1989.

6. "Five years of representative meteorological data should be used when estimating concentrations with an air quality model. Consecutive years from the most recent, readily available 5-year period are preferred." U.S. Environmental Protection Agency. *Guideline On Air Quality Models (Revised).* Office of Air Quality Planning and Standards, Research Triangle Park, NC. EPA-450/2-78-027R. July 1986. p. 9-12.

7. The Support Center for Regulatory Air Models (SCRAM) Electronic Bulletin Board, Office of Air Quality Planning and Standards, Research Triangle Park, NC 27711.

8. "For permitted sources whose emission limitations are based on a specific year of meteorological data that year should be added to any longer period being used (*e.g.*, 5 years of NWS data) when modeling the facility at a later time." U.S. Environmental Protection Agency. *Guideline On Air Quality Models (Revised).* Office of Air Quality Planning and Standards, Research Triangle Park, NC. EPA-450/2-78-027R. July 1986. p. 9-12.

9. "Hourly concentrations calculated with Gaussian models using calms should not be considered valid; the wind and concentration estimates for these hours should be disregarded and considered to be missing." U.S. Environmental Protection Agency. *Guideline On Air Quality Models (Revised).* Office of Air Quality Planning and Standards, Research Triangle Park, NC. EPA-450/2-78-027R. July 1986. p. 9-24.

10. "Inspection, servicing, and calibration of equipment must be scheduled throughout the measurement program at appropriate intervals to assure at least 90 percent data retrieval for each variable measured at sites where continuous air quality monitors are being operated. At remote sites, data retrieval for measured variables should not fall below 80 percent." U.S. Environmental Protection Agency. *Ambient Monitoring Guidelines for Prevention of Significant Deterioration (PSD).* Office of Air Quality Planning and Standards, Research Triangle Park, NC. EPA-450/4-87-007. May 1987. p. 55.

11. "Routine system calibrations and system audits should be performed at the initiation of a monitoring program and at least every six months thereafter. More frequent calibrations and audits may be needed in the early stages of the program if problems are encountered, or if valid data retrieval rates are unacceptably low." U.S. Environmental Protection Agency. *On-Site Meteorological Program Guidance for Regulatory Modeling Applications.* Office of Air Quality Planning and Standards, Research Triangle Park, NC. EPA-450/4-87-013. June 1987. p. 8-38.

12. "An independent meteorological audit (by other than one who conducts the routine calibration and operation of the network) should be performed to provide an on-site calibration of instruments as well as an evaluation of (a) the network installation, (b) inspection, maintenance, and calibration procedures, and logging thereof, (c) data reduction procedures, including spot checking of data, and (d) data logging and tabulation procedures. [S]uch independent meteorological audit-evaluations should be performed about each 6 months." U.S. Environmental Protection Agency. *Ambient Monitoring Guidelines for Prevention of Significant Deterioration (PSD).* Office of Air Quality Planning and Standards, Research Triangle Park, NC. EPA-450/4-87-007. May 1987. p. 55.

6.5 SOURCE INPUT

6.5.1 General

Emission input data to be used to evaluate SIP's and PSD analyses for compliance with the annual and short-term ambient standards are described in Table 9-1 of the *Guideline On Air Quality Models (Revised).*[1] The model input data requirements in this table apply to stationary point source control strategies.[2] Other model input criteria may apply with regard to emissions trading or NSR. Determination of emission limits for these purposes is discussed in section 9 of this document.

6.5.2 Allowable Versus Actual Emissions

PM-10 concentrations estimated from stationary point sources undergoing a SIP emission limit review must reflect the maximum allowable emission limit or federally enforceable permit limit of the source.[3] A source's total emissions reflected in modeling analyses are determined as the product of the source's emission limit, operating level, and operating factor. The operating level used must be the actual or design capacity (whichever is greater) or the federally enforceable permit condition. Operating levels less than 100 percent of capacity should also be modeled for those cases in which the source operates at a capacity substantially less than design and in which changes in stack parameters associated with the operating conditions could result in higher ground level concentrations.[4] In the case of large power plants, for example, loads such as 50 and 75 percent of capacity should also be modeled. If a source operates at greater than 100 percent load for periods during normal operation that could result in violations of the NAAQS or PSD increments, this load should be modeled.

The operating factor (*e.g.*, hours/year or hours/day) for annual averages should be the actual operating factor averaged over the most recent two years (unless it is determined that this period is not representative). For short term (24-hour) averages, the operating factor should be based on continuous operation; however, if operation is not continuous, and is constrained by a federally enforceable permit condition, an appropriate adjustment to the

modeled emission rate may be made (*i.e.*, modeling for only those hours during which the source is operating).[5]

Identical input requirements apply to sources defined as "nearby" background sources. The term "nearby" refers to those sources expected to cause a significant concentration gradient in the vicinity of the source or sources under consideration.[6] If other background sources are modeled, the maximum allowable emission limit or federally enforceable permit limit should be used in estimating average concentrations. The operating level used for estimating concentrations from these sources should be the annual level when actually operating, averaged over the most recent two years (unless this period is deemed unrepresentative). The operating factors used for other background sources are identical to those indicated previously in this section.

6.5.3 Area Sources

To estimate PM-10 concentrations from area sources, emissions input data should generally be based on annual average conditions.[7]

6.5.4 Background Concentration

Background concentrations are an essential element of the total air quality concentration to be considered in the determination of source impacts for SIP's.[8] These concentrations may include contributions from natural sources, nearby sources other than those currently under consideration, and unidentified sources. Recommendations for determining background concentrations are provided in the Guideline.[9]

In the case of isolated sources, air quality data monitored in the vicinity of the source(s) under consideration should be used to determine the background concentration for the averaging times of concern.[10] Concentrations recorded while the source in question is impacting the monitor should not be used in determining the background concentration.[11] Use of monitored air quality data is recommended for determining that portion of the background attributable to sources other than those nearby (*e.g.*, natural sources, minor sources, and distant major sources).[12] However, Tables 9-1 and 9-2 of the *Guideline on Air Quality*

Models (Revised) may be used to determine background concentrations for modelling applications.

In multi-source areas, nearby sources that are anticipated to cause a concentration gradient in the vicinity of the source or sources under consideration for emission limit(s) should be explicitly modeled.[13,14] The impact of nearby sources should be examined at those locations where interaction exists between the plume of the source under consideration and those of the nearby sources (including natural background).

6.5.5 Stack Height Input to Air Quality Modeling

Specification of stack height is an important consideration in the development of source input for an air quality modeling analysis. Generally, the lesser of the actual stack height or good engineering practice (GEP) stack height is used for air quality modeling (refer to Section 7.2 of this document for definition of GEP). The following guidance on a number of particular modeling questions has been provided by EPA:[15]

- If the actual stack height is greater than GEP height and where it is necessary to reduce stack height credit:

  Use existing stack gas exit parameters -- temperature, flow rate and stack top diameter -- and model the stack at GEP height.

- If the actual stack height is less than GEP height and dispersion techniques are employed:

  Two cases should be modeled in order to establish an appropriate emission limitation for the situation in which it is desired to construct a source at less than GEP height and use dispersion techniques to make up the difference in plume rise. First conduct a modeling analysis using the GEP stack height without enhanced dispersion parameters. Secondly, conduct a modeling analysis using the less than GEP stack height with the increased plume rise. The more stringent emission limitation resulting from each of the two model runs should be the one specified as the enforceable limitation.

- Stack height input for point sources modeled for the purpose of demonstrating protection of the NAAQS or PSD increments:

The lesser of actual or GEP stack height should be used as input.

- Stack height for background sources:

  The lesser of actual or GEP stack height should be used for each background source.

- Excluding the effects of prohibited dispersion techniques for modeling purposes:

  Modeling to exclude the effects of prohibited dispersion techniques on the emission limitations will be accomplished by using the temperature and flow rates as the gas stream enters the stack, and recalculating stack parameters to exclude the use of prohibited techniques.

- If single-flued, merged stacks or multiflued stacks are involved in a modeling analysis refer to Section 7.7 of this guideline to determine if this merging is creditable.

- If plume merging from multiflued stacks is not allowed, then each flue/liner must be modeled as a separate source and the combined impact determined. For single flued, merged stacks where credit is not allowed, each unit should be modeled as a separate stack located at the same point. The stack exit velocity and temperature would be the same as for the existing merged stack conditions and the volume flow rate based on an apportionment of the flow from the individual units.

6.5.6 Stack Downwash and Building Wake Effects

Air quality modeling of sources with stacks which are less than GEP should consider the impacts associated with building wake effects both for the source in question and for nearby sources.[16] In determining which background sources constitute "nearby" sources, the reviewing agency must exercise judgement. Exercising judgement in these cases can minimize the resource burden associated with collecting building dimension data.[17]

REFERENCES FOR SECTION 6.5

1. U.S. Environmental Protection Agency. *Guideline On Air Quality Models (Revised)*, Office of Air Quality Planning and Standards, Research Triangle Park, NC. EPA-450/2-78-027R. July 1986. p. 9-5.

2. "The EPA's policy for demonstrating stationary point source compliance with the NAAQS for SIP purposes clearly requires the use of emissions which are more closely tied to allowable emissions. The model emission input data requirements for such SIP demonstrations are contained in Table 9-1 of the 'Guideline for Air Quality Models (Revised)'..." Memorandum from Calcagni, J., and Laxton, W., OAQPS, U.S. EPA, to T.J. Maslany, Air Management Division, Region III, and W.B. Hathaway, Air Pesticides, and Toxics Division Region VI. March 16, 1989.

3. U.S. Environmental Protection Agency. *Guideline On Air Quality Models (Revised)*, Office of Air Quality Planning and Standards, Research Triangle Park, NC. EPA-450/2-78-027R. July 1986. Table 9-1 p. 9-5.

4. "Where a source operates at substantially less than design capacity, and the changes in the stack parameters associated with the operating conditions could lead to higher ground level concentrations, loads such as 50 percent and 75 percent of capacity should also be modeled." U.S. Environmental Protection Agency. *Guideline On Air Quality Models (Revised)*, Office of Air Quality Planning and Standards, Research Triangle Park, NC. EPA-450/2-78-027R. July 1986.

5. U.S. Environmental Protection Agency. *Guideline On Air Quality Models (Revised)*, Office of Air Quality Planning and Standards, Research Triangle Park, NC. EPA-450/2-78-027R. July 1986. Table 9-1 p. 9-5.

6. "Nearby Sources: All sources expected to cause a significant concentration gradient in the vicinity of the source or sources under consideration for emission limit(s) should be explicitly modeled." U.S. Environmental Protection Agency. *Guideline On Air Quality Models (Revised)*, Office of Air Quality Planning and Standards, Research Triangle Park, NC. EPA-450/2-78-027R. July 1986. p. 9-8.

7. "Emissions from area sources should generally be based on annual average conditions." U.S. Environmental Protection Agency. *Guideline On Air Quality Models (Revised)*, Office of Air Quality Planning and Standards, Research Triangle Park, NC. EPA-450/2-78-027R. July 1986. p. 9-4.

8. "Background concentrations are an essential part of the total air quality concentration to be considered in determining source impacts." U.S. Environmental Protection Agency. *Guideline On Air Quality Models (Revised)*, Office of Air Quality Planning and Standards, Research Triangle Park, NC. EPA-450/2-78-027R. July 1986. p. 9-7.

9. U.S. Environmental Protection Agency. *Guideline On Air Quality Models (Revised)*, Office of Air Quality Planning and Standards, Research Triangle Park, NC. EPA-450/2-78-027R. July 1986.

10. "Use air quality data collected in the vicinity of the source to determine the background concentration for the averaging times of concern." U.S. Environmental Protection Agency. *Guideline On Air Quality Models (Revised)*, Office of Air Quality Planning and Standards, Research Triangle Park, NC. EPA-450/2-78-027R. July 1986. p. 9-8.

11. "Determine the mean background concentration at each monitor by excluding values when the source in question is impacting the monitor." U.S. Environmental Protection Agency. *Guideline On Air Quality Models (Revised)*, Office of Air Quality Planning and Standards, Research Triangle Park, NC. EPA-450/2-78-027R. July 1986. p. 9-8.

12. "Other Sources: That portion of the background attributable to all other sources (*e.g.*, natural sources, minor sources and distant major sources) should be determined either by the procedures found in section 9.2.2 or by application of a model using Table 9-1." U.S. Environmental Protection Agency. *Guideline On Air Quality Models (Revised)*, Office of Air Quality Planning and Standards, Research Triangle Park, NC. EPA-450/2-78-027R. July 1986. p. 9-9.

13. "Nearby Sources: All sources expected to cause a significant concentration gradient in the vicinity of the source or sources under consideration for emission limit(s) should be explicitly modeled." U.S. Environmental Protection Agency. *Guideline On Air Quality Models (Revised)*, Office of Air Quality Planning and Standards, Research Triangle Park, NC. EPA-450/2-78-027R. July 1986. p. 9-8.

14. "Nearby sources which are expected to cause a significant concentration gradient in the vicinity of the source under consideration should be explicitly modeled (as 'background' sources)." Memorandum from Calcagni, J., OAQPS, U.S. EPA, to W. Laxton, OAQPS. May 3, 1989.

15. Memorandum from Helms, G.T., OAQPS, U.S. EPA, to Air Branch Chief, Regions I-X. October 10, 1985. (PN 123-85-10-10-007).

16. "If stacks for new or existing major sources are found to be less than the height defined by EPA's refined formula [H + 1.5L] for determining GEP height, then air quality impacts associated with cavity or wake effects due to the nearby building structures should be determined." U.S. Environmental Protection Agency. *Guideline*

On Air Quality Models (Revised), Office of Air Quality Planning and Standards, Research Triangle Park, NC. EPA-450/2-78-027R. July 1986. p. 7-7.

17. "This guidance provides considerable flexibility and requires judgement to be exercised by the reviewing agency in identifying which background sources should be fully modeled. The burden of collecting building dimension data may be mitigated somewhat by application of this judgement." Memorandum from Calcagni, J., OAQPS, U.S. EPA, to W.B. Hathaway, Air Pesticides, and Toxics Division, Region VI. March 31, 1989.

6.6 RECEPTOR ANALYSIS

Defining the receptor network used for air quality analyses in support of SIP revisions should be made on a case-by-case basis, taking into consideration the topography, the climatology, existing monitor locations, and results of the initial screening procedure.[1] Receptor sites for any analysis should be assigned in sufficient detail to estimate the highest concentrations and predict any potential violations of the NAAQS or the PSD increment.[2] A modeling analysis performed for the purpose of redesignating an area to attainment must follow the Guideline with respect to the scope of the receptor network and not necessarily address only the area to be redesignated.[3]

REFERENCES FOR SECTION 6.6

1. "This selection of receptor sites should be a case-by-case determination taking into consideration the topography, the climatology, monitor sites, and the results of the initial screening procedure." U.S. Environmental Protection Agency. *Guideline On Air Quality Models (Revised).* Office of Air Quality Planning and Standards, Research Triangle Park, NC. EPA-450/2-78-027R. July 1986. p.8-4.

2. "Receptor sites for refined modeling should be utilized in sufficient detail to estimate the highest concentrations and possible violations of a NAAQS or a PSD increment." U.S. Environmental Protection Agency. *Guideline On Air Quality Models (Revised).* Office of Air Quality Planning and Standards. Research Triangle Park, NC. EPA-45-0/2-78-027R. July 1986. p.8-4.

3. "If a modeling analysis is required for any reason, that analysis must meet the requirements of the Guideline." Memorandum from Bauman, R.D., OAQPS, U.S. EPA, to J. Tikvart, Office of Air Quality Planing and Standards. February 15, 1989.

6.7 OTHER MODEL REQUIREMENTS

The *Guideline on Air Quality Models (Revised)* provides discussion and guidance relative to a number of special modeling considerations for PM-10. Issues that may arise in modeling analyses of PM-10 emissions are treatment of stagnation, fumigation, long range transport, particle settling and deposition, complex terrain, and other situations where model applications are limited.

6.7.1 Stagnation

Stagnation events are characterized by periods of calm or very light winds and variable wind direction. Such conditions may persist from several hours up to several days and may lead to high ground level concentrations. Treatment of calm wind conditions poses a special problem in model applications since Gaussian models assume that concentration is inversely proportional to wind speed. Thus concentrations become unrealistically large when wind speeds are less than 1 m/s.[1] Stagnation periods should be addressed in the air quality modeling analysis; however, special precautions are warranted. The user should consult with the appropriate EPA Regional Office prior to modeling stagnation events for regulatory applications.[2]

6.7.2 Fumigation

Fumigation occurs when a plume is emitted into a stable layer of air that is subsequently mixed to ground level through convective transfer of heat from the surface or through advection to less stable surroundings. Fumigation can cause high ground level concentrations and is an important consideration for sources located near bodies of water. There are no recommended refined techniques to model fumigation conditions; however, there are screening procedures that may be used to approximate expected concentrations. Results obtained from the screening procedures should be used with care.[3,4]

6.7.3 Long Range Transport

Determining the long range transport of PM-10 emissions may be significant in the analysis of source impacts on PSD Class I areas.[5] Assistance with the appropriate techniques to utilize in these modeling situations should be obtained from the EPA Regional Office.

6.7.4 Settling and Deposition

Gravitational settling and deposition may be included in the modeling analysis if either is a significant factor. Given the small particle size, particle settling for PM-10 may be considered as negligible. Neglecting deposition is a conservative approach that is warranted for screening analyses.[6] The Industrial Source Complex (ISC) model contains settling and deposition algorithms and is recommended for use when the size distribution is quantified.[7]

6.7.5 Model Limitations

While modeling is the preferred method for determining emission limitations for both new and existing sources, there may be circumstances in which there is no applicable refined model. These include complex terrain situations, land water interface areas, secondary particulate formation, and urban locations where a large fraction of particulates originate from nontraditional sources. The Guideline provides criteria for determining the acceptability of measured data to be used in these instances.[8] Also, while generally not encouraged, model calibration of long term (annual average) models may be acceptable in some situations as the best alternative for improving the accuracy of the predicted concentration.[9]

REFERENCES FOR SECTION 6.7

1. "Treatment of calm or light and variable wind poses a special problem in model applications since Gaussian models assume that concentration is inversely proportional to wind speed. Furthermore, concentrations become unrealistically large when wind speeds less than 1 m/s are input to the model." U.S. Environmental Protection Agency. *Guideline On Air Quality Models (Revised).* Office of Air Quality Planning and Standards, Research Triangle Park, NC. EPA-450/2-78-027R. July 1986. p. 9-23.

2. "When stagnation periods such as these are found to occur, they should be addressed in the air quality modeling analyses. WYND valley, listed in Appendix B, may be applied on a case-by-case basis for stagnation periods of 24 hours or longer in valley-type situations. Caution should be applied when applying the model to elevated point sources. Users should consult with the appropriate Regional Office prior to regulatory application of WYND valley." U.S. Environmental Protection Agency. *Guideline On Air Quality Models (Revised).* Office of Air Quality Planning and Standards, Research Triangle Park, NC. EPA-450/2-78-027R. July 1986. p. 8-12. (Draft Revised September 1990)

3. "There are no recommended techniques to model this phenomenon [fumigation]. There are, however, screening procedures (see *Screening Procedures for Estimating the Air Quality Impact of Stationary Sources*) that may be used to approximate the concentrations. Considerable care should be exercised in using the results of the screening techniques." U.S. Environmental Protection Agency. *Guideline On Air Quality Models (Revised).* Office of Air Quality Planning and Standards, Research Triangle Park, NC. EPA-450/2-78-027R. July 1986. p. 8-11.

4. U.S. Environmental Protection Agency. *Screening Procedures for Estimating the Air Quality Impact of Stationary Sources.* Office of Air Quality Planning and Standards, Research Triangle Park, NC. EPA-450/4-88-010. August 1988.

5. "However, the useful distance to which most Gaussian models are considered accurate for setting emission limits is 50 km. Since in many cases Class I areas may be threatened at distances greater that 50 km from new sources, some procedure is needed to (1) determine if a significant impact will occur, and (2) identify the model to be used in setting an emission limit if the Class I increments are threatened..." U.S. Environmental Protection Agency. *Guideline On Air Quality Models (Revised).* Office of Air Quality Planning and Standards, Research Triangle Park, NC. EPA-450/2-78-027R. July 1986. p. 7-8.

6. "For screening analyses, the conservative assumption of negligible removal is warranted, considering the size of the particles." U.S. Environmental Protection Agency. *PM-10 SIP Development Guideline,* Office of Air Quality Planning and

Standards, Research Triangle Park, NC. EPA-450/2-86-001. June 1987. pp. 4-1 through 4-14.

7. "Gravitational settling and deposition may be directly included in a model if either is a significant factor. At least one preferred model (ISC) contains settling and deposition algorithms and is recommended for use when particulate matter sources can be quantified and settling and deposition are problems." U.S. Environmental Protection Agency. *Guideline On Air Quality Models (Revised).* Office of Air Quality Planning and Standards, Research Triangle Park, NC. EPA-450/2-78-027R. July 1986. p. 8-9.

8. "Modeling is the preferred method for determining emission limitations for both new and existing sources . . . [T]here are circumstances where there is no applicable model, and measured data may need to be used. Examples of such situations are: (1) complex terrain locations; (2) land/water interface areas; and (3) urban locations with a large fraction of particulate emissions from nontraditional sources." U.S. Environmental Protection Agency. *Guideline On Air Quality Models (Revised).* Office of Air Quality Planning and Standards, Research Triangle Park, NC. EPA-450/2-78-027R. July 1986. p. 11-5.

9. "Calibration of long term multi-source models has been a widely used procedure even though the limitations imposed by statistical theory on the reliability of the calibration process for long term estimates are well known.[61] In some cases, where a more accurate model is not available, calibration may be the best alternative for improving the accuracy of the estimated concentrations needed for control strategy evaluations" U.S. Environmental Protection Agency. *Guideline on Air Quality Models (Revised).* Office of Air Quality Planning and Standards, Research Triangle Park, NC. EPA-450/2-78-027R. July 1986. p. 8-13.

6.8 RECEPTOR MODELING

Volume I of the Receptor Model Technical Series describes eight categories of receptor models as follows:

Chemical Mass Balance

This method matches source particle size and chemical "fingerprints" to those measured at the receptor to back-calculate the impact of specific sources or source classes of similar chemical composition. Given data on the ambient concentrations of several chemical species and the percent by weight of these species in the emissions from the sources, a set of equations is prepared and solved to determine the source impacts.

Enrichment Factors

Ambient aerosol composition data are used in association with a reference element (usually a crustal element such as Fe, Al or Si) to provide an estimate of the degree to which a specific ambient aerosol element has been "enriched" by an anthropogenic source. If the "enriched" element is known to be a unique tracer for a specific source, and the concentration of the tracer in the source emissions is known, a crude estimate of the source's impact can be made.

Microscopic Techniques

Particle identification by optical microscopy was one of the first and the most widely used methods of source apportionment of coarse mode particles. Current technology has been expanded to include computer-driven scanning electron microscopy coupled with x-ray fluorescence analysis to provide a particle-by-particle analysis of ambient course particulate filters. As a consequence, particle identification methods traditionally founded on particle size shape, color, bifringence, and surface properties have been expanded to include elemental composition and rapid, computer assisted analysis permitting large numbers of particles to be analyzed at minimum cost.

Multivariate Methods

Statistical methods include factor analysis, regression methods, principal component and cluster analysis techniques. These methods deduce information on source impacts on the basis of the variability of chemical species measured within a large set of particulate samples. Given the premise that chemical species emitted from a specific source will vary in time (as measured at the receptor) in the same manner, multivariate methods detect the common variability of the chemical species. The analyst then identifies the contributing source by comparing those species with similar variability to the chemical composition of sources within the airshed.

Radioisotope Analysis

Measurements of carbon-14/total carbon ratios have recently been used to distinguish "modern" from fossil fuel carbon. Using this method, carbon emitted from contemporary sources (wood burning, fireplaces, leaf fragments) has been distinguished from particles released by the combustion of fossil fuels, *e.g.*, auto and diesel exhaust, coal and fuel oil carbonaceous aerosols.

Spatial Series Analysis

Spatial relationships between aerosol chemistry measured at numerous receptors can provide important clues to likely contributing sources when viewed in relation to emission density maps and given a basic understanding of the chemical composition of source emissions.

Time Series Analysis

Qualitative indications of source impacts based on temporal variations in aerosol mass and chemistry can be used, in association with source emission activity and transport data, to gain insight into likely source impacts over time.

X-ray Diffraction (XRD)

Quantitative identification of crystalline substances in the coarse mode (>2.5 um) by XRD has enabled analysts to determine impacts from fugitive emission sources within reasonable accuracy (±25 percent) for moderate to heavily loaded filters."[1]

Of these eight model types, the chemical mass balance (CMB) is the most widely used and accepted quantitative receptor model. (PM-10 SIP Development Guideline document. p. 4-1). Sources of information on the CMB model include *Receptor Model Technical Series, Volume III (1989 Revision): CMB7 User's Manual*; *Protocol For Applying and Validating the CMB Model, Protocol for Reconciling Differences Among Receptor and Dispersion Models*; and *Receptor Model Technical Series, Volume II: Chemical Mass Balance.*[2,3,4]

The *Protocol for Reconciling Differences Among Receptor and Dispersion Models* states that a minimum of five samples of exceedance-day data should be analyzed and compared. If there are fewer than five observed "exceedances" of the NAAQS, the five highest values overall should be used. If a receptor model study were undertaken for a short time period, it must be shown that the period covered was generally representative of the type of source activity and meteorology associated with exceedances observed in other receptor model studies.[5]

REFERENCES FOR SECTION 6.8

1. U.S. Environmental Protection Agency. *Receptor Model Technical Series. Volume I: Overview of Receptor Model Application to Particulate Source Apportionment*, Office of Air Quality Planning and Standards, Research Triangle Park, NC. EPA-450/4-81-016a. July 1981. pp. vii-x.

2. U.S. Environmental Protection Agency. *Receptor Model Technical Series Volume III (1989 Revision): CMB7 User's Manual*, Office of Air Quality Planning and Standards, Research Triangle Park, NC. EPA-450/4-90-004. January 1990.

3. U.S. Environmental Protection Agency. *Protocol for Reconciling Differences Among Receptor and Dispersion Models*, Office of Air Quality Planning and Standards, Research Triangle Park, NC. EPA-450/4-87-008. March 1987.

4. U.S. Environmental Protection Agency. *Receptor Model Technical Series Volume II: Chemical Mass Balance*, Office of Air Quality Planning and Standards, Research Triangle Park, NC. EPA-450/4-81-016b. July 1981.

5. "For violations of the 24-hour NAAQS, it is preferable to apply the CMB model on the days on which 'exceedances' of the NAAQS were observed. In this case, one would analyze and compare all observations greater than the level of the NAAQS. In order to obtain representative results, a minimum of five samples (*e.g.*, the five highest values) should be compared. If there are fewer than five observed 'exceedances' of the NAAQS, the five highest values overall should be used so that the analysis is based upon a representative number of days. If a receptor model study were undertaken for a short time period, it must be shown that the period covered was generally representative of the types of source activity and meteorology which are associated with exceedances measured outside of the receptor model study." U.S. Environmental Protection Agency. *Protocol for Reconciling Differences Among Receptor and Dispersion Models*, Office of Air Quality Planning and Standards, Research Triangle Park, NC. EPA-450/4-87-008. March 1987. pp. 5-6.

7.0 STACK HEIGHT REGULATIONS

7.1 GENERAL REGULATIONS

Stack height regulations affect all criteria pollutants. Revised stack height regulations were promulgated by EPA on July 8, 1985 and implement provisions of section 123 of the Act which dictate that the degree of emission limitation required for pollutant control under an applicable SIP shall not be affected by stacks in excess of good engineering practice (GEP), stack height, or by any other dispersion technique.[1,2] Stacks in existence or dispersion techniques implemented before December 31, 1970 are exempt from these provisions (see Section 7.5.1 for definition of "in existence").[3] However, sources defined in section 110(a)(3) of the Act which were constructed, reconstructed or for which major modifications were performed after December 31, 1970 are not exempt from these provisions.[4]

A comprehensive overview of stack height policy is contained in the *Workshop on Implementing the Stack Height Regulations (Revised).*[5] This document includes a discussion of SIP stack height requirements, documentation in outline format and presents several checklists for GEP stack height review.

REFERENCES FOR SECTION 7.1

1. "Section 123, which was added to the Clean Air Act by the 1977 Amendments, regulates the manner in which techniques for dispersion of pollutants from a source may be considered in setting emission limitations. Specifically, section 123 requires that the degree of emission limitation shall not be affected by that portion of a stack which exceeds GEP or by 'any other dispersion technique.'" 50 Federal Register 27,892-907 (July 8, 1985), Stack Height Regulation.

2. U.S. Environmental Protection Agency. *Code of Federal Regulations.* Title 40, Chapter I, Subchapter C, Parts 51.118, 51.164, and 52.21(h). July 1, 1991.

3. U.S. Congress. Clean Air Act, as amended November 1990. 42 U.S.C. 7401 et. seq. Section 123(a). Washington, D.C. U.S. Government Printing Office.

4. U.S. Environmental Protection Agency. *Code of Federal Regulations.* Title 40, Chapter I, Subchapter C, Part 51.118(b). July 1, 1991.

5. U.S. Environmental Protection Agency. *Workshop on Implementing the Stack Height Regulations (Revised).* Office of Air Quality Planning and Standards, Research Triangle Park, NC. October 1985.

7.2 GOOD ENGINEERING PRACTICE STACK HEIGHT

7.2.1 General

Discussion of the technical basis and procedures for determining GEP stack height are provided in the *Guideline for Determination of Good Engineering Practice Stack Height (Revised).*[1] GEP, with respect to stack height, is defined by section 123 of the Act as, "the height necessary to insure that emissions from the stack do not result in excessive concentrations of any air pollutant in the immediate vicinity of the source as a result of atmospheric downwash, eddies or wakes which may be created by the source itself, nearby structures or nearby terrain obstacles." According to 40 CFR 51.100(ii), GEP stack height is determined, quantitatively, as the greatest of the following elements:

- De Minimis

  The *de minimis* height is 65 meters, measured from the ground-level elevation at the base of the stack.

- Formula Height

  The formula height is given by:

  Hg = H + 1.5L where,

  Hg = good engineering practice stack height, measured from the ground-level elevation at the base of the stack

  H = height of nearby structure(s) measured from the ground-level elevation at the base of the stack

  L = lesser dimension, height or projected width, of nearby structure(s)

  The EPA, or State or local control agencies may require the use of a field study or fluid modeling to verify GEP stack height for the source.

  For stacks in existence prior to January 12, 1979 and after December 31, 1970 for which the owner or operator had obtained all applicable permits or approvals required under 40 CFR Parts 51 and 52, **Hg = 2.5H**, provided that the owner or operator furnishes evidence that this equation was actually used in establishing an emission limitation.

For stacks which existed prior to December 31, 1970, use the actual stack height to set emission limitations.

- Physical Demonstrations

  The height may be demonstrated by a fluid modeling or field study approved by the EPA, which ensures that the stack emissions do not result in excessive concentrations of any air pollutant as a result of atmospheric downwash, wakes, or eddy effects created by the source itself, nearby structures or nearby terrain features (see Section 7.6).

7.2.2 Definition of "Nearby" for GEP

For the purpose of determining GEP stack height, "nearby" is limited to five times the structure height or width, whichever is less (a distance not to exceed one-half mile) and in the case of a fluid model or field study is limited to one-half mile. This range may be extended for the portion of a terrain feature which exists within a distance of up to 10 times the maximum height of the feature (not to exceed two miles), if such feature reaches a height, at one-half mile from the stack, that is at least 40 percent of the GEP stack height determined by $Hg = H + 1.5L$ above or 26 meters, whichever is greater, as measured from the ground-level elevation at the base of the stack.[2]

7.2.3 Definition of "Excessive Concentration"

The term "excessive concentration," as it applies to a physical (fluid or field) demonstration of GEP stack height, is defined in 40 CFR 51.100(kk) for several situations, all of which require showing a 40 percent increase in the maximum ground-level concentration relative to the maximum concentration observed in the absence of downwash, wakes, or eddy effects. Certain situations also require showing that the stack contributes to a total concentration, due to emissions from all sources, that exceeds the NAAQS or PSD increment. The stack emission rate shall be based on an NSPS emission rate applicable to the source category unless demonstrated infeasible (See Section 7.6.4 for more detailed discussion).

REFERENCES FOR SECTION 7.2

1. U.S. Environmental Protection Agency. *Guideline for Determination of Good Engineering Practice Stack Height (Revised).* Office of Air Quality Planning and Standards, Research Triangle Park, NC. EPA-450/4-80-023R. June 1985.

2. U.S. Environmental Protection Agency. *Code of Federal Regulations.* Title 40, Chapter I, Subchapter C, Part 51.100(jj). July 1, 1991.

7.3 DISPERSION TECHNIQUES

7.3.1 General

The revised EPA stack height regulations generally prohibit stationary sources from taking credit for dispersion techniques in determining allowable emission limitations.

7.3.2 Prohibitions

As stated in 40 CFR 51.100(hh)(1), the prohibited dispersion techniques are as follows:

- Using that portion of a stack in excess of GEP stack height
- Varying the pollutant emission rate according to atmospheric conditions or ambient concentrations of that pollutant (referred to as intermittent or supplemental control systems - ICS or SCS)
- Increasing final exhaust gas plume rise by manipulating source process parameters, exhaust gas parameters, stack parameters or combining exhaust gases from several existing stacks into one stack, or other selective handling of exhaust gas streams so as to increase the exhaust gas plume rise

7.3.3 Exceptions

Although credit for selective handling of exhaust gas streams to increase the exhaust gas plume rise is generally prohibited, in certain circumstances, credit is allowed for the following:

- Merging of gas streams in original design and construction (also see Section 7.7)
- Smoke management techniques involved in agricultural or silvicultural programs
- Episodic restrictions on residential wood burning and open burning
- Reheating after a pollution control system[1]

REFERENCES FOR SECTION 7.3

1. U.S. Environmental Protection Agency. *Code of Federal Regulations.* Title 40, Chapter I, Subchapter C, Part 51.100(hh)(2). July 1, 1991.

7.4 REMANDED REGULATIONS

The following three portions of the revised EPA stack height regulations, promulgated on July 8, 1985, were litigated and remanded to EPA for review:[1]

- Under the definition of excessive concentration:

  Grandfathering pre-October 11, 1983 within-formula stack height increases from demonstration requirements [40 CFR 51.100(kk)(2)]

- Under the definition of dispersion technique:

  Dispersion credit for sources originally designed and constructed with merged or multiflue stacks [40 CFR 51.100(hh)(2)(ii)(A)]

- Under the definition of GEP stack height:

  Grandfathering of pre-1979 use of the unrefined "H + 2.5L" formula [40 CFR 51.100(ii)(2)].

As a result of the remand, an interim policy on stack height regulatory actions is in effect. This policy provides that most actions affected by the remand may proceed, provided appropriate caveat language is incorporated indicating that the action is subject to review and modification on completion of EPA's response to the court decision.[2]

REFERENCES FOR SECTION 7.4

1. "Although the court upheld most provisions of the rules, three portions were remanded to EPA for review: 1. Grandfathering pre-October 11, 1983 within-formula stack height increases from demonstration requirements [40 CFR 51.100(kk)(2)]; 2. Dispersion credit for sources originally designed and constructed with merged or multiflue stacks [40 CFR 51.100(hh)(2)(ii)(A)]; and 3. Grandfathering of pre-1979 use of the refined H + 1.5L formula [40 CFR 51.100(ii)(2)]." Memorandum from Potter, J.C., OAR, *to* Air Management Division Director, Regions I, III, and IX, Air and Waste Management Division Director, Region II, Air, Pesticides, and Toxics Management Division Director, Regions IV, and VI, Air and Radiation Division Director, Region V, Air and Toxics Division Director, Regions VII, VIII, and X. Interim Policy on Stack Height Regulatory Actions. April 22, 1988.

2. "In general, actions taken at this time to approve or disapprove statewide stack height rules which are affected by the remand must include the qualification that they are subject to review and modification on completion of EPA's response to the court decision." Memorandum from Calcagni, J., OAQPS, to Air Branch Chief, Regions I-X. Application of the Interim Policy for Stack Height Regulatory Actions. May 17, 1988. (PN 123-88-05-17-016).

7.5 SPECIFIC STACK HEIGHT POLICIES

7.5.1 Definition of "In Existence"

In promulgating the 1982 stack height regulations, EPA adopted a definition of "stack heights in existence before December 31, 1970."[1] This definition allowed the grandfathering of stacks either: (a) physically completed; (b) for which continuous construction had begun; or (c) for which construction had not yet commenced, but for which binding contracts had been signed that could not be canceled without substantial loss to the source owner or operator. The revised stack height regulation promulgated on July 8, 1985 does not modify this definition except to restrict its applicability to facilities that have not undertaken major modifications or reconstruction and have not ducted effluent gas streams from post-1970 units into pre-1971 stacks.[2]

Grandfathering exemptions may be supported in one of three ways.[3]

(1) In the case of stacks physically completed prior to December 31, 1970, proof of stack completion must be documented (an acceptable form of documentation, for example, would be a copy of the 1970 Federal Power Commission Report Form 67, which includes information on stack height);

(2) Evidence submitted to support the commencement date of stack construction can include any contemporaneous documentation such as building inspection records, delivery receipts of construction materials, or news clippings that clearly indicate that construction activities were under way before December 31, 1970; or

(3) Date of signature on a contract for stack construction is acceptable for applying grandfathering exemptions provided the "binding contract" is one that commits the source owner or operator to financially undertake stack construction and that did not have an "escape" provision in effect on December 31, 1970 allowing cancellation by the owner or operator without penalty. If a contract contains provisions for assessing penalties for modification or cancellation that were in effect before December 31, 1970, then the provisions must be reviewed to determine whether the penalties and other costs of cancellation would have imposed a "substantial loss" on the owner or operator. In general, EPA will presume that a substantial loss would have resulted in those situations in which penalties exceed 10 percent of the project cost.

Documentation supporting any of these grandfathering exemptions must be made available for public review by the State or source owner or operator.[4]

7.5.2 Tie-ins to Existing Stacks

The definition of "source" that should be used in determining whether tie-ins to grandfathered stacks should be permitted or prohibited is a single emission unit. Hence, credit for tying a single, post-1970 unit(s) into a grandfathered stack serving a number of old units is prohibited under the revised stack height regulations.[5]

REFERENCES FOR SECTION 7.5

1. "Grandfathered Stack Height. The 1970 Clean Air Act became effective on December 31, 1970. Prior to that date some sources had constructed stacks taller than their GEP height. In section 123, Congress recognized this and exempted those sources' stack heights. Section 123 allows credit for stack height in existence on December 31, 1970. A source's stack is considered to be 'in existence' if that stack was part of the design of a facility on which construction commenced prior to December 31, 1970." 47 Federal Register 5,865-69 (February 8, 1982), Stack Height Regulations.

2. "The EPA's definition was upheld by the U.S. Court of Appeals for the D.C. circuit in Sierra Club v. EPA, 719 F.2d 436, and has not been modified in any way by the rule revisions promulgated on July 8, 1985, except to restrict its applicability to facilities that have not undertaken major modifications or reconstruction, and have not ducted the effluent gas streams from post-1970 units into pre-1971 stacks." Memorandum from D.D., Tyler, OAQPS, to Regional Air Management Division Director, Regions I-X. Determining Stack Heights "In Existence" Before December 31, 1970. October 28, 1985. (PN 123-85-10-28-010).

3. Memorandum from D.D., Tyler, OAQPS, to Regional Air Management Division Director, Regions I-X. Determining Stack Heights "In Existence" Before December 31, 1970. October 28, 1985. (PN 123-85-10-28-010).

4. "The burden of proof for showing that a stack is eligible for grandfathering exemption lies with either the State or the source owner or operator, as appropriate, and documentation in support of exemptions must be made available for public review during the rulemaking process." Memorandum from D.D., Tyler, OAQPS, to Regional Air Management Division Director, Regions I-X. Determining Stack Heights "In Existence" Before December 31, 1970. October 28, 1985. (PN 123-85-10-28-010).

5. "Q: What 'source' definition should be used in determining whether tie-ins to grandfathered stacks should be permitted or prohibited? A: The term 'source' in this instance means a single emitting unit. Thus, credit for tying a single post-1970 unit(s) into a grandfathered stack serving a number of old units is prohibited under the regulation." Memorandum from Helms, G.T., OAQPS, to Air Branch Chief, Regions I-X. Questions and Answers on Implementing the Revised Stack Height Regulation. October 10, 1985. (PN 123-85-10-10-007).

7.6 DEMONSTRATIONS BY FLUID MODELING, FIELD STUDIES OR *NUISANCE*

7.6.1 Applicability

Sources seeking credit for stack height above GEP formula height must demonstrate by a field study or fluid modeling analysis that this height is necessary to avoid excessive pollutant concentrations as a result of downwash, wakes or eddy effects created by the source itself, nearby structures or nearby terrain (refer to Section 7.2 for definitions of "excessive concentration" and "nearby").[1]

Sources seeking credit within formula height may also need to conduct such demonstrations in those cases where it is believed that the formula may significantly overstate the appropriate stack height credit, and to justify certain increases in stack height.[2]

Sources seeking credit for increases in stack heights up to formula GEP may justify the increase by demonstrating the actual presence of a local nuisance caused by the existing stack, as determined by the authority administering the SIP.[3]

7.6.2 Field Studies

A field demonstration of GEP height involves the installation and operation of a monitoring network designed to clearly identify maximum downwind concentrations. Concentration patterns from two release points must be determined: one near the source in the presence of structure(s) and/or terrain and the other in the absence of such features. Except for differences due to structure(s) and/or terrain, the atmospheric flow at the latter location must be similar to that near the source, as verified by meteorological observations upwind of both sites.[4]

7.6.3 Fluid Modeling

Credit for Height Above GEP Formula. In performing fluid modeling demonstrations, sources seeking credit for stacks greater than formula height must use the appropriate emission rate for the source category (see Section 7.6.4) and add the background air quality as determined by procedures described in Section 6.5.3.[5] The following "excessive concentration" criteria must be met: (a) exceedance of the NAAQS or PSD increment, and (b) a concentration of at least 40 percent in excess of the maximum concentration experienced in the absence of downwash, wakes or eddy effects. After these criteria are met, the source must use the lowest stack height necessary to meet the more restrictive of the two excessive concentration criteria in order to set emission limitations. This lowest height becomes the new GEP height.[6]

Credit for Height Less than or Equal to GEP Formula. For sources seeking credit after October 11, 1983 for increases in existing stack height up to GEP formula height, the excessive concentration criteria (a) and (b) given above generally apply. For sources seeking credit after January 12, 1979 for a stack height less than or equal to formula height; for sources seeking credit after November 9, 1984 based on the aerodynamic influence of cooling towers; and for sources seeking credit after December 31, 1970 based on the aerodynamic influence of structures not adequately represented by GEP formula, the 40 percent excess concentration is the only criterion needed to demonstrate equivalence to formula height.[7]

7.6.4 Emission Rate for Physical Demonstrations

For sources seeking credit above formula GEP height, the stack height regulations require that a presumptive emission rate equivalent to the NSPS be established for the source in question before fluid modeling is initiated to determine the stack height necessary to avoid excessive concentrations due to downwash.[8] The NSPS emission rate is "presumptive" in that EPA presumes that all sources seeking to justify stack heights in excess of those established by GEP formulae are capable of controlling their emissions to NSPS levels. If it is infeasible for a source to control its emissions to NSPS levels, then an alternative emission limit representing the lowest feasible emission limit must be met before credit for stack height in excess of GEP formula height can be obtained. These alternative emission rates will be reviewed by EPA based on the Best Available Retrofit Technology (BART) guidelines.[9,10]

Unless the source owner or operator demonstrates that the emission rate prescribed by the NSPS applicable to the source category is infeasible, the allowable emission rate to be used in conducting the field study or fluid modeling demonstrations must be the NSPS emission rate.[11] In cases where no NSPS limit is applicable, a BART analysis must be conducted to determine the emission rate to be used in studies demonstrating GEP stack height greater than formula height.[12]

For certain sources seeking credit for increases in existing stack heights up to GEP formula height, the emission rate used in the demonstration shall be the emission rate specified by the applicable SIP, or, in the case of no established limit, the actual emission rate shall be used.[13] For other sources for which verification of correct GEP height is requested, the satisfying 40 percent excess concentration criterion is sufficient demonstration.[14]

7.6.5 Not in Ambient Air

For the purpose of the physical demonstration, the exceedance of the NAAQS or PSD increment need not occur at a location meeting the definition of ambient air.[15]

7.6.6 Additional Guidance

Sources of guidance on conducting fluid modeling demonstrations have been identified by EPA.[16] Documents which form the basis of information include *Guideline for Use of Fluid Modeling to Determine Good Engineering Stack Height*;[17] *Determination of Good Engineering Practice Stack Height - A Fluid Model Demonstration Study for a Power Plant*;[18] *Guideline for Fluid Modeling of Atmospheric Diffusion*;[19] and *Fluid Modeling Demonstration of Good Engineering Practice Stack Height in Complex Terrain*.[20]

REFERENCES FOR SECTION 7.6

1. U.S. Environmental Protection Agency. *Code of Federal Regulations.* Title 40, Chapter I, Subchapter C, Part 51.100(ii)(3). July 1, 1991.

2. "Nevertheless, in response to the court's remand, EPA is including in this final rule a provision for the authority administering these rules to require field studies or fluid modeling demonstrations, even for stacks built to formula height, in cases where it believes that the formula may significantly overstate the appropriate stack height credit. (Quite apart from any such regulatory provision, States have authority to require such demonstrations, on the terms outlined or on stricter or more lenient terms, under the savings provision of section 116 of the Clean Air Act)." 50 Federal Register 27,892-907 (July 8, 1985), Stack Height Regulations.

3. ". . . (ii) the actual presence of a local nuisance caused by the existing stack, as determined by the authority administering the State implementation plan;." U.S. Environmental Protection Agency. *Code of Federal Regulations.* Title 40, Chapter I, Subchapter C, Part 51.100(kk)(2). Washington, D.C. Office of the Federal Register. July 1, 1991.

4. "A field demonstration of GEP stack height requires experiments to determine the concentration patterns from two release points -- one with the structure(s) and/or terrain; the other in the absence of structure(s) and/or terrain. [A] monitoring array must be arranged to clearly identify the maximum concentrations downwind of similar releases at both sites." U.S. Environmental Protection Agency. *Guideline for Determination of Good Engineering Practice Stack Height (Technical Support Document For the Stack Height Regulations) (Revised).* Office of Air Quality Planning and Standards, Research Triangle Park, NC. EPA-450/4-80-023R, June 1985. p. 47.

5. "In conducting a demonstration, a source should use the modeled stack height, input the applicable emission rate that is equivalent to NSPS for that source category (however, sources may on a case-by-case basis demonstrate that such an emission is not feasible for their situations and determine their emission limitations based on Best Available Retrofit Technology), and add in the background air quality as determined by procedures contained in two EPA guidance documents (EPA, 1978, 1981)." U.S. Environmental Protection Agency. *Guideline for Determination of Good Engineering Practice Stack Height (Technical Support Document For the Stack Height Regulations) (Revised).* Office of Air Quality Planning and Standards, Research Triangle Park, NC. EPA-450/4-80-023R, June 1985. p. 52.

6. "After demonstrating that both excessive concentration criteria are met as defined in section 1, the source must determine the lowest stack height necessary to meet the more restrictive of the two excessive concentration criteria. This lower height is the new GEP height." U.S. Environmental Protection Agency. *Guideline for Determination of Good Engineering Practice Stack Height (Technical Support Document For the Stack Height Regulations) (Revised).* Office of Air Quality Planning and Standards, Research Triangle Park, NC. EPA-450/4-80-023R, June 1985. p. 52.

7. U.S. Environmental Protection Agency. *Code of Federal Regulations.* Title 40, Chapter I, Subchapter C, Part 51.100(kk)(3). July 1, 1991.

8. "The regulations require that a presumptive emission rate equivalent to the new source performance standards (NSPS) be established for the source in question before modeling may be conducted to determine stack height needed to avoid excessive concentrations due to downwash (where the NSPS has been subject to revision, and the source in question is not subject to the revised NSPS, the earliest standard will be applied; *e.g.*, for power plants a rate of 1.2 lb/MM Btu would be used)." Memorandum from Tyler, D.D., OAQPS, to Regional Air Management Division Director, Regions I-X. Implementation of Stack Height Regulations - Presumptive NSPS Emission Limit for Fluid Modeling Stacks Above Formula GEP Height. October 28, 1985. (PN 123-85-10-28-009).

9. "This emission rate is described as 'presumptive' because it is EPA's presumption that all sources seeking to justify stack heights exceeding those provided by the GEP formulae are capable of controlling their emissions to NSPS levels. However, the regulations also allow source owners or operators to rebut this presumption, establishing an alternative emission rate that represents the most stringent level of control that can feasibly be met by that source in excess of the NSPS level. In the preamble to the regulations, EPA indicated that it will rely on the 'Guidelines for Determination of Best Available Retrofit Technology for Coal Fired Power Plants and other Existing Stationary Facilities' EPA-450/3-80-009b (BART Guidelines) when reviewing these rebuttals." Memorandum from Tyler, D.D., OAQPS, to Regional Air Management Division Director, Regions I-X. Implementation of Stack Height Regulations - Presumptive NSPS Emission Limit for Fluid Modeling Stacks Above Formula GEP Height. October 28, 1985. (PN 123-85-10-28-009).

10. "In conclusion, we are in full agreement with the position taken by Region III that sources seeking credit above formula height must meet an emission rate consistent with BART/NSPS." Letter from Gerald A. Emison, G.A., OAQPS, to J.P. Proctor. April 20, 1989.

11. "Q: Can new or modified sources who have agreed to a case-by-case best available control technology (BACT) emission rate be required to use this rate for fluid modeling rather than a less stringent new source performance standard (NSPS) emission rate? A: As set forth in 40 CFR 51.1(kk), the allowable emission rate to be

used in making demonstrations under this part shall be prescribed by the NSPS that is applicable to the source category unless the owner or operator demonstrates that this emission rate is infeasible." Memorandum from Helms, G.T., OAQPS, to Air Branch Chief, Regions I-X. Questions and Answers on Implementing the Revised Stack Height Regulations. October 10, 1985. (PN 123-85-10-10-007).

12. "Issue: A source seeking stack height credit above formula GEP is required by regulation to demonstrate an exceedance of an ambient air quality standard. The regulation also provides that the allowable emission rate to be used in making the demonstration shall be the new source performance standard (NSPS), unless this is shown to be infeasible. The regulations, however, do not address what emission rates to use when there are no NSPS emission rates applicable. Answer: The preamble to the stack height regulation is clear that the emission rate must be limited to the NSPS or best available retrofit technology (BART) rate (50 FR 27898). The legislative history of the stack height requirement cautioned that credit for stacks above formula height be granted only in rare cases. For this reason, EPA determined that sources seeking credit above formula height should first attempt to reduce their emissions. In establishing an emission rate other than NSPS, the preamble states that EPA will rely on its BART guideline. Thus, we believe that a BART analysis must be conducted to determine the emission rate to be used in studies demonstrating GEP stack height greater than formula height when no NSPS limit is applicable." Memorandum from Calcagni, J., OAQPS, U.S. EPA, to I.L. Dickstein. Stack Height Questions. November 27, 1990.

13. U.S. Environmental Protection Agency. *Code of Federal Regulations*. Title 40, Chapter I, Subchapter C, 51.100(kk)(2). July 1, 1991.

14. U.S. Environmental Protection Agency. *Code of Federal Regulations*. Title 40, Chapter I, Subchapter C, Part 51.100(kk)(3). July 1, 1991.

15. "Q: Must the exceedance of NAAQS or PSD increment due to downwash, wakes or eddies occur at a location meeting the definition of ambient air? A: No, the exceedance may occur at any location, including that to which the general public does not have access." Memorandum from Helms, G.T., OAQPS, U.S. EPA, to Air Branch Chief, Regions I-X. Questions and Answers on Implementing the Revised Stack Height Regulations. October 10, 1985. (PN 123-85-10-10-007).

16. Memorandum from Tikvart, J.A., OAQPS, U.S. EPA, to D. Stonefield, OAQPS. *Guidance on Fluid Model Demonstrations for Determining GEP Stack Height in Complex Terrain*. September 19, 1985. (PN 123-85-09-19-006).

17. U.S. Environmental Protection Agency. *Guideline for Use of Fluid Modeling to Determine Good Engineering Stack Height*. Office of Air Quality Planning and Standards, Research Triangle Park, NC. EPA-450/4-81-003. July 1981.

18. U.S. Environmental Protection Agency. *Determination of Good Engineering Practice Stack Height - A Fluid Model Demonstration Study for a Power Plant.* Environmental Science Research Laboratory. EPA-600/3-83-024. April 1983.

19. U.S. Environmental Protection Agency. *Guideline for Fluid Modeling of Atmospheric Diffusion.* Environmental Science Research Laboratory. EPA-600/8-81-009.

20. U.S. Environmental Protection Agency. *Fluid Modeling Demonstration of Good Engineering Practice Stack Height in Complex Terrain.* Atmospheric Sciences Research Laboratory, EPA-600/3-85-022. April 1985.

7.7 MERGED STACKS

7.7.1 General

Dispersion credit for the retrofit combining or merging of gas streams is generally not allowed under the stack height regulations.[1] Originally designed and constructed merged streams are creditable at this time [40 CFR 51.100(hh)(2)]; however, this provision is affected by the stack height remand (see Section 7.4).

7.7.2 Exceptions

Credit for retrofit merging is allowed under the following circumstances:[2]

- After July 8, 1985 such merging is part of a change in facility operation that includes the installation of pollution controls and is accompanied by a net reduction in the allowable emissions of a pollutant. This exclusion from the definition of "dispersion techniques" shall only apply to the emission limitation for the pollutant affected by such change in operation; and

- Before July 8, 1985 such merging: (1) was part of a change in operation at the facility that included the installation of emission control equipment; (2) was conducted for sound economic or engineering reasons;[3] or (3) was not "significantly motivated by an intent to obtain emissions credit for increased dispersion."[4] Such a demonstration could be made by submitting evidence showing that consideration of dispersion advantages was conspicuously absent in the intent of the source owner or operator.[5]

In addition, exemption from prohibitions on gas stream merging is provided for sources which constructed their stacks before December 31, 1970.

It is incumbent on the State or source owner or operator to demonstrate that any retrofit merging was not motivated by an intent to avoid emission controls. Information indicating that merging was specifically carried out to increase final exhaust gas plume rise serves as a demonstration of dispersion intent that justifies denial of credit for merged gas streams.[6]

REFERENCES FOR SECTION 7.7

1. Memorandum from Tyler, D.D., OAQPS, U.S. EPA, to Air Management Division Directors, Regions I-X. Implementation of Stack Height Regulations - Exceptions From Restrictions on Credit for Merged Stacks. October 28, 1985. (PN 123-85-10-28-008).

2. U.S. Environmental Protection Agency. *Code of Federal Regulations.* Title 40, Chapter I, Subchapter C, Part 51.100(hh)(2)(ii). July 1, 1991.

3. "Sources that are not covered under these criteria may still qualify for exemption if they can show that merging was conducted for sound economic or engineering reasons." Memorandum from Tyler, D.D., OAQPS, U.S. EPA, to Air Management Division Directors, Regions I-X. Implementation of Stack Height Regulations - Exceptions From Restrictions on Credit for Merged Stacks. October 28, 1985. (PN 123-85-10-28-008).

4. "In some instances, a State or emission source owner may not be able to make a demonstration as described above, or believe that sound economic reasons existed for merging stacks, regardless of the relationship between financial savings attributable to reduced emission control requirements versus lower stack construction costs. In such cases, an opportunity should be provided to affirmatively demonstrate that merged stacks were not 'significantly motivated by an intent to obtain emissions credit for increased dispersion'." Memorandum from Tyler, D.D., OAQPS, U.S. EPA, to Air Management Division Directors, Regions I-X. Implementation of Stack Height Regulations - Exceptions From Restrictions on Credit for Merged Stacks. October 28, 1985. (PN 123-85-10-28-008).

5. "For instance, such a demonstration could be made by submitting documentary or other evidence (*e.g.*, internal company memoranda presenting the alternative construction opportunities available to the company) that indicates the intent of the source owner or operator and shows that consideration of dispersion advantages was conspicuously absent." Memorandum from Tyler, D.D., OAQPS, U.S. EPA, to Air Management Division Directors, Regions I-X. Implementation of Stack Height Regulations - Exceptions From Restrictions on Credit for Merged Stacks. October 28, 1985. (PN 123-85-10-28-008).

6. "Because merged gas streams are generally regarded as prohibited dispersion techniques under the regulations, it is incumbent on the State or the source owner or operator to demonstrate that such merging was conducted for sound economic or engineering reasons, and was not significantly motivated by an intent to avoid emission controls. Consequently, the first step should entail a review of State and EPA files to determine the existence of any evidence of intent on the part of the source owner or operator. Information showing that merging was conducted

specifically to increase final exhaust gas plume rise serves as a demonstration of dispersion intent that justifies a denial of credit for merged gas streams." Memorandum from Tyler, D.D., OAQPS, U.S. EPA, to Air Management Division Directors, Regions I-X. Implementation of Stack Height Regulations - Exceptions From Restrictions on Credit for Merged Stacks. October 28, 1985. (PN 123-85-10-28-008).

7.8 STACK HEIGHT NEGATIVE DECLARATIONS

7.8.1 General

Following promulgation of the revised stack height regulations on July 8, 1985, each State was required to review its SIP and determine if any sources were credited with stack heights or dispersion techniques not in accordance with the revised regulations.[1] Where sources are found to be in compliance with the revised regulations, a "negative declaration" is issued in the Federal Register for that State. A Federal Register notice of negative declaration for the stack height requirements does not need to be incorporated into the SIP since it is not required under section 110 of the Act.

7.8.2 Information Needed

There are three primary ways to declare a source as unaffected by the stack height rules[2]

- Source was constructed prior to December 31, 1970
- Source stack height is less than GEP formula height
- Source emission limitation was not affected by stack height or by any other dispersion technique

It is very important that a description of the grandfathering documentation is provided along with the date of documentation, so that proof of the grandfathering can be easily traced back to a specific document.[3]

7.8.3 Modeling Needed

Source remodeling would be required in those situations in which credit for excess stack height or dispersion techniques has been taken. Any remodeling must follow the

Guideline on Air Quality Models (Revised) and Supplement A.[4] If a source has never been analyzed for dispersion, then no modeling is required.[5]

REFERENCES FOR SECTION 7.8

1. "(2)(B) nine months after date of promulgation . . ." U.S. Congress. Clean Air Act, as amended August 1977. 42 U.S.C. 1857 *et. seq.* section 406(2)(b). Washington, D.C. U.S. Government Printing Office. November 1977.

2. U.S. Environmental Protection Agency. *Workshop on Implementing the Stack Height Regulations (Revised).* Control Programs Development Division, Office of Air Quality Planning and Standards, Research Triangle Park, NC. October 1985.

3. "For grandfathering documentation, the date the source was built is not essential, but the type and date of the documentation that the source was built prior to December 31, 1970, must be listed." Memorandum from Helms, G.T., OAQPS, U.S. EPA, to Air Branch Chief, Region I-X. Processing of Stack Height Negative Declarations. October 9, 1987. (PN 123-87-10-09-014).

4. U.S. Environmental Protection Agency. *Guideline on Air Quality Models (Revised).* Office of Air Quality Planning and Standards. Research Triangle Park, NC. EPA-450/2-78-027R. July 1986.

5. "If a source has never been analyzed for dispersion, then it is not necessary to conduct a dispersion analysis now." Memorandum from Tyler, D.D., OAQPS, U.S. EPA, to Air Division Director, Regions I-X. Clarification of Existing Guidance on Dispersion Modeling Requirements for Plants with "Tall Stacks" and Other Prohibited Dispersion Techniques. February 11, 1986. (PN 123-86-02-11-012).

8.0 CONTROL STRATEGIES

8.1 GENERAL

Pursuant to section 110(a)(2) of the amended act, each SIP must contain an enforceable control strategy that provides the degree of emissions reductions required to ensure attainment and maintenance of all NAAQS. The emissions reductions must be sufficient to offset any expected increases in concentrations of air pollutants that might result from population growth, industrial activity, motor vehicle traffic, or other factors.[1] In general, a control strategy will consist of emission limitations applicable to sources within specified categories. Specific emissions limitations are established based on what is required for NAAQS attainment.

REFERENCES FOR SECTION 8.1

1. "Each plan must set forth a control strategy that provides the degree of emission reductions necessary for attainment and maintenance of the national ambient air quality standards. The emission reductions must be sufficient to offset any increase in air quality concentrations that are expected due to projected growth of population, industrial activity, motor vehicle traffic, or other factors." 51 Federal Register 40,665 (November 7, 1986), Attainment and Maintenance of National Standards.

8.2 CONTROL STRATEGY TRANSITION

Particulate matter emissions from most point sources and many area sources have been controlled through SIP's designed to implement the former NAAQS for total suspended particulate (TSP). Existing regulatory requirements (*e.g.*, emission limitations) must continue to be enforced by Federal and State agencies during the transition from a TSP SIP to a PM-10 SIP. If the existing regulations require using reasonably available control technology (RACT), this requirement continues and sources must comply with the regulations. Existing emissions requirements can be relaxed only if the State uses dispersion modeling to demonstrate that a higher allowable emission rate will not result in degradation of the existing air quality and that the PM-10 NAAQS will be maintained. States should utilize the existing control strategy in a TSP SIP as the basis for a PM-10 SIP.[1,2,3]

REFERENCES FOR SECTION 8.2

1. "Existing regulatory requirements (*e.g.*, emission PM limits) must continue to be enforced by Federal and State agencies during the transition from a total suspended particulate (TSP) SIP to a PM-10 SIP. If the existing regulations require using reasonably available control technology (RACT), this requirement continues and sources must comply with the regulation. Existing emissions requirements can be relaxed only if the State demonstrates with dispersion modeling that a higher allowable emission rate will not result in degradation of the existing air quality and still maintain the PM-10 NAAQS." U.S. Environmental Protection Agency. *PM-10 SIP Development Guideline - Supplement.* Office of Air Quality Planning and Standards. June 1988. p. 15.

2. "Particulate matter emissions from most point sources and many area sources have been controlled through SIP's designed to implement the former NAAQS for TSP. . . States should utilize the existing control strategy in a TSP SIP as the basis for a PM-10 SIP." U.S. Environmental Protection Agency. *PM-10 SIP Development Guideline.* Office of Air Quality Planning and Standards. EPA-450/2-86-001. June 1987 p. 7-6.

3. "The State should focus on developing approvable PM-10 SIP's. However, it is likely that the elements of the TSP SIP that were disapproved will be needed for the PM-10 SIP." U.S. Environmental Protection Agency. *Response to Questions Regarding PM-10 State Implementation Plan (SIP) Development.* Office of Air Quality Planning and Standards. June 1988. p. 33.

8.3 ESTABLISHING EMISSION LIMITATIONS

8.3.1 General

Emission limitations for point and area sources of PM-10 are established based on an analysis of ambient concentrations and source contributions to determine the level of control needed to demonstrate attainment of the NAAQS. This involves determination of design concentrations for the appropriate averaging intervals for each location that must be reduced to the level of the respective NAAQS. After design concentrations have been established, a proportioning method is used to estimate the required emission limitations for primary PM-10.[1]

Under section 189(e) of the Act, the control requirements applicable for major stationary sources of PM-10 are also applicable to major stationary sources of PM-10 precursors, except where EPA determines that such sources do not contribute significantly to PM-10 levels which exceed the PM-10 NAAQS in the area. Such a determination will be based on air quality analyses, technical information provided by individual States, and on any other studies conducted by the State or EPA which may help to indicate whether major stationary sources of specific precursors contribute significantly to PM-10 concentrations in a particular area. EPA intends to make a formal determination as to whether major stationary sources of PM-10 precursors contribute significantly to PM-10 levels in a particular area when it takes rulemaking action on the individual moderate area SIP's.[2] Section 8.4.4 of this guideline provides a more detailed discussion of EPA policy on PM-10 precursors.

8.3.2 Design Concentrations

The design concentration is the ambient PM-10 level for a particular site that must be reduced to the level of the NAAQS. With the PM-10 annual and 24-hour NAAQS, two separate design concentrations, one for each standard, are needed per site. The annual design concentration is the expected annual arithmetic mean determined in accordance with Appendix K to 40 CFR Part 50. The 24-hour design concentration is the level at which the expected number of exceedances of the 24-hour standard is less than or equal to one. There are several acceptable approaches for determining the expected number of exceedances of the

24-hour standard. These include a table look-up procedure, fitting a statistical distribution, graphical estimation, and conditional probabilities.[3]

Design concentrations may be based on ambient measurements of PM-10, or model estimates of ambient concentrations at individual sites during one or more years of stable emissions conditions. In all cases where dispersion model estimates are used, the design concentration is assumed to be the sum of the concentrations contributed by the sources and an appropriate background concentration. The preferred approach for estimating a design value is through the use of an applicable dispersion model corroborated by receptor models, any available PM-10 data, and any available TSP data. If corroboration is not possible, a dispersion model should be used except for periods of stagnation. Monitoring data should be used for stagnation periods.[4] In limited instances, the use of a receptor model alone may be sufficient to demonstrate attainment. Approval for such an approach must be obtained prior to SIP submittal.[5]

The uncertainty in the design concentration estimate is reduced to the extent that sufficient, representative meteorological and monitoring data are available. Modeling estimates using 5 years of National Weather Service meteorological data (or at least one year of on-site data), or three years of representative air quality measurements should be considered in determining 24-hour design concentrations. If more years of data with relatively unchanging emissions are available, they also may be considered in calculating design concentrations.[4]

8.3.3 Averaging Periods

Enforceable emission limits must be sufficient to protect both the short-term (24-hour) and annual NAAQS for PM-10. Thus, SIP emission limits should be based on the NAAQS (annual or 24-hour) which result in the most stringent control requirements.[6] Each emission limit must state the appropriate averaging time for that limit. Specific control measures designed to achieve the required emission limitations must then be implemented in the SIP (40 CFR 51.111). Specific control measures for PM-10 are discussed in Section 8.4 of this guideline.

8.3.4 Compliance Methods

Each SIP must identify methods for determining compliance with the emission limitations, according to requirements in 40 CFR 51.111. These methods must be consistent with the averaging period appropriate to each limitation. Thus, a SIP may contain separate compliance test methods for each averaging period. According to section 504(b) of the Act, compliance may be determined by any method that provides sufficiently reliable and timely information for determining compliance, notwithstanding specific requirements elsewhere in the Act. Such methods include source testing, continuous emissions monitoring, or monitoring operating parameters related to the emission rate. Section 11.4 of this guideline provides a more detailed discussion of compliance monitoring.

REFERENCES FOR SECTION 8.3

1. "Once PM-10 design concentrations have been established through the use of air quality measurements or model estimates, a proportioning method can be used at each site to estimate control requirements for SIP development. This proportioning method differs from simple rollback in that the source contributions are determined from receptor or dispersion modeling and not directly from the emissions as in simple rollback." U.S. Environmental Protection Agency. *PM-10 SIP Development Guideline.* Office of Air Quality Planning and Standards. EPA-450/2-86-001. June 1987. p. 6-8.

2. " . . . the control requirements applicable under PM-10 SIP's in effect for major stationary sources of PM-10 are also applicable to major stationary sources of PM-10 precursors, except where EPA determines that such sources do not contribute significantly to PM-10 levels which exceed the PM-10 NAAQS in the area . . . a determination will be based on air quality analyses, on any additional technical information discovered by individual States during SIP development, and on any other studies conducted by the State or EPA which may help to indicate whether major stationary sources of specific precursors contribute significantly to PM-10 concentrations in a particular area. . . . EPA intends to make a formal determination as to whether major stationary sources of PM-10 precursors contribute significantly to PM-10 levels in a particular area when it takes rulemaking action on the individual moderate area SIP's." 57 Federal Register 13,541 (April 16, 1992), General Preamble for the Implementation of Title I of the Clean Air Act Amendments of 1990; Proposed Rule; SIP Requirements; Particulate Matter; Determination of RACM/RACT; PM-10 Precursors.

3. "There are several acceptable approaches for determining appropriate 24-hour PM_{10} design concentrations. These approaches which are described in the next sections are based on monitored or modeled PM_{10} concentrations. They include: (1) a table look-up procedure; (2) fitting a statistical distribution; (3) graphical estimation; and (4) the use of conditional probabilities. Each of these approaches and corresponding data usage requirements are presented in detail in the ozone guideline." U.S. Environmental Protection Agency. *PM-10 SIP Development Guideline.* Office of Air Quality Planning and Standards. EPA-450/2-86-001. June 1987. pp. 6-1 through 6-8.

4. "Section 6.2 of the PM-10 SIP Development Guideline states that the preferred approach for estimating a design value is through the use of an applicable dispersion model corroborated by receptor models, any available total suspended particulates data, and any available PM-10 data. If corroboration is not possible, we recommend that the dispersion model be used except for periods of stagnation; for periods of stagnation, monitored PM-10 data should be used to establish the design value." Memorandum from Emison, Gerald A., Director, OAQPS, U.S. EPA, to Irwin L.

Dickstein, Director, Air and Toxics Division, Region VIII. Response to PM-10 Control Strategy Issues. June 30, 1989. (PN 110-89-06-30-103).

5. "It is appropriate in certain situations to rely on a receptor model (RM) demonstration as a basis for a control strategy demonstration. While it is clear from the guideline that the use of dispersion models in combination with receptor models is the preferred approach, in certain limited situations, the use of an RM demonstration alone may be adequate to demonstrate attainment. The State must obtain approval to use the RM demonstration option prior to SIP submittal. The decision that an RM demonstration is adequate to demonstrate attainment is the responsibility of the Regional Office. Even when an RM is employed, consideration should be given to initiation of basic meteorological measurements as a contingency to the control program being found inadequate and predictive dispersion modeling being necessary at a later time. The use of dispersion modeling and receptor modeling in combination remains the preferred approach when both models are applicable to a particular circumstance." Memorandum from Bauman, Robert D. Chief, SO_2/Particulate Matter Programs Branch and Joseph A. Tikvart, Chief, Source Receptor Analysis Branch, to Chief, Air Branch, Regions I-X. PM-10 SIP Demonstration for Small Isolated Areas with Spatially Uniform Emissions. July 5, 1990. (PN 110-90-07-05-106).

6. "The SIP-related emission limits should be based on the NAAQS (annual or 24-hour) which result in the most stringent control requirements. For example, if the annual NAAQS requires more stringent control requirements than the 24-hour NAAQS, the annual NAAQS is considered the more restrictive standard and the corresponding emission limit(s) would be adopted." U.S. Environmental Protection Agency. *PM-10 SIP Development Guideline.* Office of Air Quality Planning and Standards. EPA-450/2-86-001. June 1987. pp. 6-1 through 6-8.

8.4 CONTROL METHODS FOR PM-10 SOURCES

8.4.1 RACM/BACM Issuance

Under section 190 of the amended Act, EPA was required to issue technical guidance on reasonably available control measures (RACM) and best available control measures (BACM) for three PM-10 area source categories: (1) urban fugitive dust, (2) residential wood combustion, and (3) prescribed silvicultural and agricultural burning. EPA satisfied its obligation as to the RACM portion of such guidance when it published the *General Preamble*. Specific guidance on RACM for these source categories is provided in appendices C1, C2, and C3, respectively, to the *General Preamble*. In addition, section 190 requires EPA to examine other source categories contributing to PM-10 nonattainment, determine if additional guidance for RACM and BACM is needed, and issue any such guidance by November 15, 1993.[1]

8.4.2 RACM/BACM SIP Requirement

Under section 189(a)(1)(C) of the amended Act, moderate PM-10 nonattainment area SIP's must control PM-10 emissions by providing for the implementation of RACM. In addition, section 172(c)(1) states that the RACM which nonattainment area plans must provide be implemented, must include such reductions in emissions from existing sources in the area as may be obtained through the adoption, at a minimum, of reasonably available control technologies (RACT). Thus, as stated in the *General Preamble*, together these two provisions require that moderate area PM-10 SIP's include RACM and RACT for existing sources of PM-10 emissions.[1]

8.4.3 Determining RACM/RACT

The suggested starting point for specifying RACM in each SIP is the listing of available control measures for fugitive dust, residential wood combustion, and prescribed burning including measures selected from among those listed in the appendices to the *General Preamble*. EPA does not presume that these control measures are reasonably available in any

or all areas; however, EPA expects States to provide reasoned justification for rejection of any measures listed as available in these appendices. Measures determined to be unreasonable because of insignificant emissions contributions from the sources affected may be excluded from further consideration. The resulting available control measures should then be evaluated for reasonableness, considering their technological feasibility and the cost of control in the applicable area. If a State receives public comment, in particular circumstances, demonstrating that additional control measures may be reasonably available, such measures should be added to the list of available measures for that area. The RACM is then determined for the affected area's SIP. States should also consider the feasibility of implementing measures in part when full implementation would be infeasible. When the process of determining RACM is completed, the individual measures should then be converted into a legally enforceable vehicle meeting EPA's criteria regarding the enforceability of SIP's and SIP revisions [see section 172(c)(6) and 110(a)(2)(A) of the Act].[2]

Historically, EPA has defined RACT as "the lowest emission limitation that a particular source is capable of meeting by the application of control technology that is reasonably available considering technological and economic feasibility." RACT applies to existing sources of PM-10 stack, process fugitive, and fugitive dust emissions [see section 172(c)(1) of the Act]. EPA recommends that, in moderate nonattainment areas, major stationary sources be the minimum starting point for RACT analysis. EPA also recommends that available control technology be applied to existing sources that are reasonable to control in light of the attainment needs of the area and the feasibility of such controls. Thus, RACT analyses for existing stationary sources should not be limited to major stationary sources, but should include other sources in the area that are reasonable to control given the area's attainment needs.[3]

8.4.4 PM-10 Precursors

Primary emissions of sulfur dioxide, nitrogen oxides, and volatile organic compounds (VOCs) can be converted in the atmosphere to particulate sulfates, nitrates, and organic compounds that contribute to PM-10 levels. According to section 189(e) of the amended Act, the control requirements applicable under PM-10 SIP's in effect for major stationary sources of PM-10 are also applicable to major stationary sources of PM-10 precursors, except where the EPA determines that such sources do not contribute significantly to PM-10 levels which

exceed the PM-10 NAAQS in the area. Thus, for example, because moderate PM-10 nonattainment area SIP's should contain RACT for major stationary sources of PM-10, they should also contain RACT for major stationary sources of PM-10 precursors, unless EPA determines otherwise. EPA intends to make a formal determination of whether major stationary sources of PM-10 precursors contribute significantly to PM-10 levels in a particular area when EPA takes rulemaking action on individual moderate area SIP's. The discussion in the *General Preamble* is intended to provide initial guidance for controlling PM-10 precursors for major stationary sources in PM-10 moderate nonattainment areas. This guidance does not preclude any specific findings made by EPA based on its review of individual PM-10 nonattainment area SIP's.[4]

In the western United States, EPA generally believes that sources of sulfur dioxide and nitrogen oxides may contribute to PM-10 exceedances in several major metropolitan areas, but are not as likely to be significant contributors to the nonattainment problem in other western areas. If EPA determines that major stationary sources of SO_2 and NO_x in western areas do not contribute significantly to exceedances of the PM-10 NAAQS, such sources would not be expected to meet the control requirements (*e.g.*, RACT) applicable to major stationary sources of PM-10. This determination will be based on information contained in the SIP submittals, and on any other additional available information States may provide. In making its determination, EPA will consider the presence of factors which enhance the likelihood of secondary particulate formation, such as source mix and density, nonattainment area size, meteorology and topography.[4]

In the eastern United States, pollutant transport between airsheds can be responsible for a large portion of secondary particle concentrations in nonattainment areas. Under these circumstances, determining whether PM-10 precursor sources in a nonattainment area contribute significantly to PM-10 concentrations in the same area is more difficult. In all cases, as stated earlier, EPA will determine the applicability of section 189(e) based on all available technical information including any information provided by States in their individual SIP submittals. EPA will assess the reasonableness of each SIP submittal in part by considering the fact that regionwide reductions in precursor emissions are expected to result from the implementation of other provisions of the Act. These reductions may mitigate precursor contributions to PM-10 concentrations.[4]

EPA will consider the information submitted by States containing major stationary sources of VOCs in PM-10 nonattainment areas to determine if VOC emissions from such sources contribute significantly to exceedances of the ambient standard. EPA will assess the reasonableness of the submission when reviewing a SIP submittal containing a request for an exemption from PM-10 precursor controls because of VOC reductions obtained from implementing other control requirements of the amended Act.[4]

8.4.5 Condensible PM-10

Condensible particulate matter (CPM) is particulate matter that forms in the atmosphere as exhaust gases from a source cool. CPM emissions form particles in the PM-10 size range and are considered cool PM-10 emissions.[5] EPA believes that it is reasonable (and therefore constitutes RACT) to control CPM only where CPM comprises a significant proportion of the emissions from an existing stationary source.[5] A list of sources suspected of emitting significant amounts of condensible material is provided in the *PM-10 SIP Development Guideline*.[6]

8.4.6 Control Measures Available for Fugitive Dust RACM

Fugitive dust is particulate matter suspended in the air either by mechanical disturbance or by blowing wind. EPA policy is to reduce fugitive dust emissions using preventive measures rather than mitigative measures. Available control measures are listed in Appendix C1 of the *General Preamble* and include the following.[7]

1. Pave, vegetate, or chemically stabilize access points where unpaved traffic surfaces adjoin paved roads and unpaved parking areas.

2. Require dust control plans for construction or land clearing projects.

3. Require haul trucks to be covered.

4. Provide for traffic rerouting or rapid cleaning of temporary sources of dust on paved roads.

5. Require paving or stabilizing of permanent unpaved haul roads, and parking or staging areas at commercial, municipal, or industrial facilities.

6. Develop traffic reduction plans for unpaved roads and apply measures to encourage the use of paved roads.

7. Limit use of recreational vehicles on open land.

8. Require improved material specification for and reduction of usage of skid control sand or salt.

9. Require curbing and pave or stabilize shoulders of paved roads.

10. Pave or chemically stabilize unpaved roads.

11. Establish dust control measures of material storage piles.

12. Provide for storm water drainage to prevent water erosion into paved roads.

13. Require vegetation, chemical stabilization, or other abatement of winderodible soil, including lands subjected to water mining, abandoned farms, and abandoned construction sites.

14. Rely upon the soil conservation requirements of the Food Security Act to reduce emissions from agricultural operations.

These measures apply to all fugitive dust sources except those associated with stationary sources where RACT is applicable. Technical guidance on fugitive dust control measures is found in *Control of Open Fugitive Dust Sources*.[8]

8.4.7 Control Measures Available for Residential Wood Combustion RACM

Wood smoke from residential wood combustion (RWC) is a significant source of PM-10 in some PM-10 nonattainment areas in the western United States. EPA has provided a

new source performance standard for RWC (53 FR 5860, February 26, 1988) to improve the performance of wood burning devices nationwide. EPA does not believe, however, that this standard alone will result in attainment of the PM-10 standards in areas affected by wood smoke.[9] Therefore, additional control measures were identified and are listed in Appendix C2 of the *General Preamble*. These include the following:[9]

1. Establish an episode curtailment program.

2. Establish a public information program.

3. Encourage improved performance of wood burning devices by:

- Establishing a program to identify, through opacity observation, deficiencies in stove operation and maintenance.
- Providing voluntary dryness certification for wood moisture.
- Evaluating and encouraging the accelerated changeover of existing devices to the new source performance standard or other clean burning stoves.

4. Provide inducements that would lead to reductions in the stove and fireplace population (or use) by:

- Slowing the growth of woodburning devices in new housing units.
- Encouraging a reduction in the number of woodburning devices.
- Discouraging the resale of used stoves.
- Discouraging the availability of free (or very inexpensive) firewood.

Additional guidance on control measures for residential wood combustion is contained in *Guidance Document for Residential Wood Combustion Control Measures*.[10]

8.4.8 Control Measures Available for Prescribed Burning RACM

For the purpose of PM-10 SIP development, prescribed burning consists of all open burning of vegetative matter, including silvicultural and agricultural burning. This includes planned ignitions, and prescribed natural fire. Prescribed burning contributes to PM-10 nonattainment in some regions of the United States.[11]

EPA believes that States should establish a smoke management (SM) program which will constitute RACM. Such programs should reduce population exposure to smoke from prescribed burning, while assuring that resource management goals are met. Nothing in a smoke management program constituting RACM is intended to influence vegetation management or fire suppression practices so as to increase the potential for wildfire to the point that natural resources or public safety are compromised.[11]

EPA believes that it is reasonable to apply a SM program in those moderate PM-10 nonattainment areas where it has been shown, through monitoring, modeling, or other analysis, that prescribed burning can or does contribute to exceedances of the PM-10 NAAQS. The smoke management program should also apply to those areas outside of the nonattainment area if it is shown that prescribed burning outside of the nonattainment area can or does contribute to the exceedances. The prescribed burning RACM may be limited only to the season(s) when PM-10 exceedances occur if it can be shown that the annual PM-10 NAAQS is not violated. In addition, it may not be reasonable to control certain source categories with *de minimis* impact based on consideration of their collective influence on PM-10 emissions, duration, season, and proximity to affected populations.[11]

Appendix C3 of the *General Preamble* discusses the control measures available for prescribed burning.[11] An SM program should consist of at least the following components:

1. *Smoke dispersion evaluation.* The program should use meteorological analyses to determine when meteorological conditions are favorable or unfavorable for burning.

2. *Burn planning authorization and administration.* The smoke management program should provide a process (*e.g.*, telephone call-in) for receiving burn requests, evaluating requests and granting approval of burns.

3. *Requirements for ensuring burner qualifications.* Voluntary training in smoke management techniques should be reasonably available for all burners.

4. *Public education and awareness.* Information programs on the nature of and reasons for smoke management should be periodically presented to the public.

5. *Surveillance and enforcement.* The SM program should rely on routine PM-10 monitoring, and/or modeling supplemented by periodic visual assessments of the effectiveness of the dispersion evaluation program.

6. *Emission inventories and emission efforts.* States should develop and maintain an emission inventory for prescribed burning and all burns should be categorized as to their purpose.

7. *State oversight.* The relationship of the State air pollution agency with other State agencies to which management of the SM program may have been delegated will need to be determined on a State-by-State basis.

8.4.9 RACT Determination for Stationary Sources

The amended Act requires RACT for PM-10 nonattainment area SIP's. Appendix C4 of the *General Preamble* discusses RACT determinations for stationary sources. The EPA recommends that RACT for a particular source be determined on a case-by-case basis depending on both the technological and economic feasibility of reducing emissions from that source. Control may be implemented through process changes or through add-on control technology. The technological feasibility of applying an emission reduction should consider the source's process and operating procedures, raw materials, physical plant layout, and any other environmental impacts such as water pollution, waste disposal, and energy requirements. Analysis of economic feasibility should include the cost of reducing emissions and the cost differential between the particular source and other similar sources that have implemented emission reductions.[12]

Alternative approaches to reducing emissions of PM-10 are discussed in *Control Techniques for Particulate Emissions from Stationary Sources - Volume I and Volume II*.[13,14] Additional sources of information on control technology are background information documents for new source performance standards and *Identification, Assessment, and Control of Fugitive Particulate Emissions*.[15]

REFERENCES FOR SECTION 8.4

1. 57 Federal Register, 13,540 (April 16, 1992), General Preamble for the Implementation of Title I of the Clean Air Act Amendments of 1990; Proposed Rule; SIP Requirements; Particulate Matter; Statutory Background; RACM/RACT.

2. 57 Federal Register, 13,540 (April 16, 1992), General Preamble for the Implementation of Title I of the Clean Air Act Amendments of 1990; Proposed Rule; SIP Requirements; Particulate Matter; Determination of RACM/RACT; RACM.

3. 57 Federal Register, 13,541 (April 16, 1992), General Preamble for the Implementation of Title I of the Clean Air Act Amendments of 1990; Proposed Rule; SIP Requirements; Particulate Matter; Determination of RACM/RACT; RACT.

4. 57 Federal Register, 13,541-2 (April 16, 1992), General Preamble for the Implementation of Title I of the Clean Air Act Amendments of 1990; Proposed Rule; SIP Requirements; Particulate Matter; Determination of RACM/RACT; PM-10 Precursors.

5. 57 Federal Register, 13,542-3 (April 16, 1992), General Preamble for the Implementation of Title I of the Clean Air Act Amendments of 1990; Proposed Rule; SIP Requirements; Particulate Matter; Determination of RACM/RACT; Condensible PM-10.

6. U.S. Environmental Protection Agency, *PM-10 SIP Development Guideline*, EPA-450/2-86-001, Research Triangle Park, NC, June 1987. P.5-33.

7. 57 Federal Register, 18,072 (April 28, 1992), General Preamble for the Implementation of Title I of the Clean Air Act Amendments of 1990; Supplemental; Proposed Rule; Appendix C1 - Available Fugitive Dust Control Measures.

8. U.S. Environmental Protection Agency, *Control of Open Fugitive Dust Sources*. EPA-450/3-88-008, Research Triangle Park, NC, September 1988.

9. 57 Federal Register, 18,072 (April 28, 1992), General Preamble for the Implementation of Title I of the Clean Air Act Amendments of 1990; Supplemental; Proposed Rule; Appendix C2 - Available Residential Wood Combustion Control Measures.

10. U.S. Environmental Protection Agency, *Guideline Series - Guidance Document for Residential Wood Combustion Emission Control Measures*, EPA-450/2-89-015, Research Triangle Park, NC, September 1989.

11. 57 Federal Register, 18,072-3 (April 28, 1992), General Preamble for the Implementation of Title I of the Clean Air Act Amendments of 1990; Supplemental; Proposed Rule; Appendix C3 - Prescribed Burning Control Measures.

12. 57 Federal Register, 18,073-4 (April 28, 1992), General Preamble for the Implementation of Title I of the Clean Air Act Amendments of 1990; Supplemental; Proposed Rule; Appendix C4 - RACT Determinations for Stationary Sources.

13. U.S. Environmental Protection Agency, *Control Techniques for Particulate Emissions from Stationary Sources - Volume I.* EPA 450/3-81-005a. Research Triangle Park, NC, September 1982.

14. U.S. Environmental Protection Agency, *Control Techniques for Particulate Emissions from Stationary Sources - Volume II.* EPA 450/3-81-005b. Research Triangle Park, NC, September 1982.

15. U.S. Environmental Protection Agency, *Identification, Assessment, and Control of Fugitive Particulate Emissions.* EPA 600/8-86-023. Research Triangle Park, NC, August 1986.

9.0 GENERAL PROVISIONS

9.1 GENERAL

NAAQS are established at a level to protect the public health and welfare. On July 1, 1987, EPA revised the NAAQS for particulate matter, replacing TSP as the indicator for particulate matter with a new indicator that included only those particles with an aerodynamic diameter less than or equal to a nominal 10 micrometers (called PM-10).[1] The amount of time that areas are given to reach the NAAQS depends on whether the standard is a primary standard (health based) or a secondary standard (welfare based).[2,3] The PSD increments are set to prevent relative deterioration in air quality for different classes.

SIP's and SIP revisions provide for the implementation, maintenance, and enforcement of measures needed to attain and maintain the NAAQS. If the provisions in a SIP are found to be substantially inadequate, a SIP call may be issued by the U.S. EPA.

REFERENCES FOR SECTION 9.1

1. 52 Federal Register 24,634 (July 1, 1987), Revisions to the National Ambient Air Quality Standards for Particulate Matter.

2. U.S. Congress. Clean Air Act, as amended November 1990. 42 U.S.C. 7401 *et. seq.* Section 109. Washington, D.C. U.S. Government Printing Office.

3. U.S. Congress. Clean Air Act, as amended November 1990. 42 U.S.C. 7401 *et. seq.* Section 110(a). Washington, D.C. U.S. Government Printing Office.

9.2 CLEAN AIR ACT REQUIREMENTS: TIME FRAMES AND PM-10 NAAQS SIP REQUIREMENTS

9.2.1 Designations

On the date the Clean Air Act Amendments were enacted, (November 15, 1990), by operation of law PM-10 areas were designated as either nonattainment or unclassifiable. Areas meeting the qualifications of section 107(d)(4)(B) were designated nonattainment. These areas included all former Group I areas identified in 52 FR 29383 (August 7, 1987) and 55 FR 45799 (October 31, 1990) and other areas violating the PM-10 NAAQS prior to January 1, 1989. All other areas were designated unclassifiable. A Federal Register notice announcing all of the areas designated nonattainment for PM-10 at enactment of the amended Act and classified as moderate was published in 56 FR 11101 (March 15, 1991). A subsequent notice correcting certain information in the March 15, 1991 notice was published in 56 FR 37654 (August 8, 1991). The amended Act allows EPA to redesignate any of the areas designated unclassifiable to nonattainment in accordance with section 107(d)(3), after the date of enactment. On April 22, 1991 EPA announced in 56 FR 16274 that it had initiated the redesignation process for 16 areas.[1]

9.2.2 Classification

Section 188 of the amended Act outlines the process for classification of areas designated nonattainment and establishes the corresponding attainment date. In accordance with section 188(a), all PM-10 nonattainment areas are initially classified as moderate. If, at any time before the applicable attainment date, EPA determines that a moderate area cannot "practicably" attain the PM-10 NAAQS by the Act deadline, the area may be reclassified as serious. A moderate area may also be reclassified as serious after the passage of the moderate area attainment date if EPA determines that the area has failed to attain the standard. EPA's decisions to reclassify areas will be based on facts specific to each area under review. EPA must provide notices in the Federal Register and an opportunity for public comment before making reclassification decisions. EPA believes its policy of reclassification creates an incentive for the timely submittal and effective implementation of moderate area SIP requirements and facilitates the PM-10 attainment objective.[2]

9.2.3 Attainment Dates

The *General Preamble* addresses only the control measures recommended for moderate PM-10 nonattainment areas. As such, the following discussion is limited to the attainment dates for moderate nonattainment areas. Section 188(c)(1) of the amended Act specifies that moderate nonattainment areas designated nonattainment upon enactment (initial moderate nonattainment areas) are to attain the PM-10 NAAQS as expeditiously as practicable, but no later than December 31, 1994, unless they are reclassified as serious. Those areas designated nonattainment subsequent to enactment and classified as moderate must attain the PM-10 NAAQS as expeditiously as practicable, but no later than the end of the sixth calendar year after the area's designation as nonattainment.[2] Under section 188(d) of the Act, the attainment date for a moderate area may be extended for 1 year provided that the State has fully complied with the applicable SIP, no more than one exceedance of the 24-hour PM-10 standard has occurred in the year preceding the extension year, and the annual mean PM-10 concentration is less than or equal to the annual PM-10 standard. For an area, no more than two such extensions may be granted by EPA.

For moderate areas designated nonattainment by operation of law upon enactment of the amended Act and subsequently determined by EPA to be unable to "practicably" attain the NAAQS by December 31, 1994, the amended Act specifies certain dates by which EPA must propose to reclassify those areas as serious and take final action. Those areas designated nonattainment after enactment, must be reclassified as serious within 18 months after the required submittal date for the moderate area SIP. Taken together with the requirement that a SIP be submitted 18 months after an area is designated nonattainment, EPA is required to reclassify an appropriate moderate area as serious within 3 years of the nonattainment designation.[2]

9.2.3.1 Attainment date waiver

Under section 188(f) of the amended Act, EPA has the authority to waive specific attainment dates for moderate PM-10 nonattainment areas where nonanthropogenic sources contribute significantly to the violation of the PM-10 NAAQS. The attainment date may be waived, however, only for areas that fully implement their moderate area SIP requirements.

As a result, any State requesting an attainment date waiver should nevertheless proceed with SIP development and implementation. Nonanthropogenic sources include only those emissions where the human role is slight or nonexistent. EPA will be issuing additional guidance on the scope of the waiver provision as it applies to both moderate and serious PM-10 nonattainment areas.[3]

9.2.3.2 International border areas

Under section 179B of the amended Act, a SIP for a moderate PM-10 nonattainment area affected by emissions from sources located outside the United States may be approved by EPA, although it fails to demonstrate attainment by the applicable date, provided the plan meets all other applicable requirements of the Act. The State must satisfy EPA that the SIP would be adequate to attain by the applicable date, except for emissions originating outside the United States. The SIP must also meet all of the applicable requirements (*e.g.*, RACM/RACT) under the Act. In general, EPA expects that such areas will be adjacent to international borders.[4]

9.2.4 Plan Submission

States must develop and submit SIP's providing for the attainment of the PM-10 NAAQS for every area designated as nonattainment and classified as moderate for PM-10 under the amended Act. For initial moderate PM-10 areas (designated nonattainment upon enactment), section 189(a)(2) of the amended Act requires States to submit a SIP revision (*e.g.*, including RACM/RACT and an attainment demonstration) by November 15, 1992. The NSR program provisions for these areas were due June 30, 1992. For PM-10 areas designated nonattainment after enactment of the Act, States are required to submit SIP's within 18 months of the date of designation. Specific requirements applicable to moderate nonattainment areas include the requirement that SIP's provide for an NSR permit program; an attainment demonstration (or a demonstration that attainment is impracticable); RFP/quantitative milestones; the control of PM-10 precursors; RACM/RACT; and contingency measures. These requirements are discussed below.[5]

9.2.4.1 NSR permit program

Section 189(a)(1) of the amended Act requires States with moderate PM-10 nonattainment areas to meet the requirements of section 172(c)(5) by submitting an implementation plan containing a permit program meeting the requirements of section 173 for the construction and operation of new and modified major stationary sources of PM-10 (and, in some cases, PM-10 precursors). For initial moderate PM-10 areas designated nonattainment upon enactment, States must submit a SIP revision to EPA containing the NSR program provisions for these areas by June 30, 1992. For PM-10 areas designated nonattainment after enactment of the Act, States are required to submit SIP's containing the NSR program within 18 months after designation of each affected area.[6]

Section 10.2.6 of this guideline provides additional information on NSR permit program requirements under the amended Act.

9.2.4.2 Attainment demonstration

States with moderate PM-10 nonattainment areas are required under section 189(a)(1)(B) of the amended Act to submit a demonstration showing attainment by the applicable attainment date. Such demonstrations must include air quality modeling. Alternatively, the State may show that attainment by the applicable date is impracticable. A SIP submittal demonstrating attainment must contain a comprehensive, accurate, current inventory of actual emissions from all sources of PM-10 in the area as established in section 172(c)(3).[7]

Modeling guidelines to be followed in the demonstration of attainment for the initial moderate PM-10 nonattainment areas include *PM-10 SIP Development Guideline* (June 1987); *Guideline on Air Quality Models (Revised)*; a memorandum from Tikvart and Bauman titled *PM-10 SIP Demonstration for Small Isolated Areas with Spatially Uniform Emissions* (July 5, 1990); and any applicable regulatory requirements. In addition, Appendix C5 of the *General Preamble* provides EPA's supplemental attainment demonstration policy that may be followed in some special circumstances. For moderate areas designated after enactment of the amended Act, the attainment demonstration will be reviewed in accordance with the general guidelines cited above and any other applicable EPA guidance or regulations. The

supplemental policy provided in Appendix C5 of the *General Preamble* will not apply to these areas.[7]

9.2.4.3 Reasonable further progress

States must submit PM-10 nonattainment area SIP's which include quantitative emissions reductions milestones to be achieved every 3 years until an area is redesignated attainment. These milestones should demonstrate RFP as described under section 171(1). States must demonstrate to EPA that the SIP measures are being implemented and the milestones have been met within 90 days after the milestone due date. It is then EPA's responsibility to determine whether the State's demonstration is adequate within 90 days of receiving the demonstration.

If a State fails to submit the quantitative milestone demonstration, or EPA determines that a milestone was not met, the State is required to submit a SIP revision due within 9 months of either the missed reporting date or EPA's determination that a milestone was missed. The SIP revision must also ensure that the next milestone will be achieved by the applicable date and/or the PM-10 attainment date will be met if there are no additional milestones.[8]

Section 189(c) does not define the starting point for counting the 3-year period for RFP milestones. EPA's position concerning this issue is provided in the *General Preamble*. The first quantitative milestone deadline for initial PM-10 moderate nonattainment areas is November 15, 1994.[8]

Note that the December 31, 1994 attainment date is only 46 days after the November 15, 1994 milestone deadline. Therefore, EPA's policy for initial PM-10 moderate nonattainment areas is that the emissions reductions progress made between the SIP submittal due date (November 15, 1991) and the attainment date (December 31, 1994) will satisfy the first quantitative milestone. This policy was adopted because it is administratively impracticable to require separate milestone and attainment demonstrations within such a narrow timeframe. EPA is required to determine whether a nonattainment area has attained the standards within 6 months after the applicable attainment date under sections 179(c) and 188(b)(2) of the Act. Therefore, consistent with the milestone requirement, within 90 days

after the December 31, 1994 attainment date, States must demonstrate that the SIP has been implemented and the area has attained the standards or, alternatively, qualifies for a 1-year extension of the attainment date under section 188(d) of the Act.[8]

EPA plans to issue future guidance on the RFP/quantitative milestone requirements for those areas designated moderate PM-10 nonattainment after enactment of the amended Act.[8]

9.2.4.4 PM-10 precursors

Section 189(e) of the Act provides that the applicable control requirements under PM-10 nonattainment area SIP's in effect for major stationary sources of PM-10 are also applicable to major stationary sources of PM-10 precursors, except where EPA determines that the sources of PM-10 precursors do not contribute significantly to PM-10 levels which exceed the PM-10 NAAQS in the area. In general, EPA's determination will be based upon air quality analysis in which States assess the contribution of precursors. If precursors do contribute to nonattainment, States must consider both the source-receptor relationship and the significance of precursor contributions to overall nonattainment.[9] Section 8.4.4 of this guideline discusses EPA's initial guidance for controlling PM-10 precursors for major stationary sources in moderate PM-10 nonattainment areas.

In determining the significance of and the need to control precursors in a specific area, EPA will rely in part on the technical information contained in the State's submittal. This information includes, but is not limited to, filter analysis, the relative contribution of precursors to overall nonattainment, and the State's RACT/RACM strategy. EPA encourages the States to submit additional material for consideration. All findings will be made on a case-by-case basis due to the different conditions present among the various nonattainment areas. EPA has provided initial guidance for controlling PM-10 precursors for major stationary sources in moderate PM-10 nonattainment areas in the *General Preamble*. EPA intends to provide additional guidance, if necessary, on control requirements for major stationary sources of PM-10 precursors when it issues proposed regulations for the NSR permit program applicable to PM-10 nonattainment areas, and when it issues guidance on control technology requirements applicable to major stationary sources in serious PM-10 nonattainment areas.[9]

9.2.4.5 RACM/RACT

Section 189(a)(1)(C) of the amended Act requires that moderate area SIP's include RACM for the control of PM-10 emissions. Section 172(c)(1) of the amended Act requires that RACM for nonattainment areas include "such reductions in emissions from existing sources in the area as may be obtained through the adoption, at a minimum, of reasonably available control technology . . . " Together these two provisions require that moderate area PM-10 SIP's include RACM and RACT for existing sources of PM-10 emissions.[10]

Under section 189(a)(1) of the amended Act, initial moderate PM-10 nonattainment areas must submit SIP's containing RACM/RACT control measures by November 15, 1991. These SIP's must provide for the implementation of RACM/RACT no later than December 10, 1993. Under section 189(a)(2)(B), areas designated nonattainment and classified as moderate after enactment must submit SIP's containing RACM/RACT control measures 18 months after the nonattainment designation. Under section 189(a)(1)(C), these SIP's must provide for the implementation of RACM/RACT no later than 4 years after designation, which is 30 months after the applicable SIP submittal deadline.[10]

9.2.4.6 Contingency measures

As provided in section 172(c)(a) of the amended Act, all moderate PM-10 nonattainment area SIP's must include contingency measures. Contingency measures are measures that become effective without further action by the State or EPA, upon determination by EPA that the area has failed to make RFP or to attain the PM-10 NAAQS by the statutory deadline. Contingency measures should consist of available control measures not included in the primary control strategy.[11]

Under section 172(b), the Administrator of EPA sets a schedule (not to extend 3 years from the affected areas' nonattainment designation) for when the provisions required under section 172(c) must be submitted. The Administrator has not set a schedule for when contingency measures are due for the initial moderate PM-10 nonattainment areas and, therefore, States are not obligated to submit contingency measures. EPA has provided guidelines in a February 25, 1992 memorandum on the contingency measure due date for the

initial moderate PM-10 nonattainment areas. Among other things, guidance also addresses how EPA may treat contingency measure States have already submitted.[12]

REFERENCES FOR SECTION 9.2

1. 57 Federal Register 13,573 (April 16, 1992), General Preamble for the Implementation of Title I of the Clean Air Act Amendments of 1990; Proposed Rule; SIP Requirements; Particulate Matter; Statutory Background; Designations.

2. 57 Federal Register 13,537 (April 16, 1992), General Preamble for the Implementation of Title I of the Clean Air Act Amendments of 1990; Proposed Rule; SIP Requirements; Particulate Matter; Statutory Background; Classifications and Attainment Dates.

3. 57 Federal Register 13,544-5 (April 16, 1992), General Preamble for the Implementation of Title I of the Clean Air Act Amendments of 1990; Proposed Rule; SIP Requirements; Particulate Matter; SIP's That Do Not Demonstrate Attainment; Attainment Date Waiver Nonanthropogenic Sources.

4. 57 Federal Register 13,545 (April 16, 1992), General Preamble for the Implementation of Title I of the Clean Air Act Amendments of 1990; Proposed Rule; SIP Requirements; Particulate Matter; SIP's That Do Not Demonstrate Attainment; International Border Areas.

5. 57 Federal Register 13,538 (April 16, 1992), General Preamble for the Implementation of Title I of the Clean Air Act Amendments of 1990; Proposed Rule; SIP Requirements; Particulate Matter; Statutory Background; General SIP Requirements.

6. 57 Federal Register 13,538 (April 16, 1992), General Preamble for the Implementation of Title I of the Clean Air Act Amendments of 1990; Proposed Rule; SIP Requirements; Particulate Matter; Statutory Background; NSR Permit Program.

7. 57 Federal Register 13,538-9 (April 16, 1992), General Preamble for the Implementation of Title I of the Clean Air Act Amendments of 1990; Proposed Rule; SIP Requirements; Particulate Matter; Statutory Background; Attainment Demonstration.

8. 57 Federal Register 13,539 (April 16, 1992), General Preamble for the Implementation of Title I of the Clean Air Act Amendments of 1990; Proposed Rule; SIP Requirements; Particulate Matter; Statutory Background; RFP/Quantitative Milestones.

9. 57 Federal Register 13,539-40 (April 16, 1992), General Preamble for the Implementation of Title I of the Clean Air Act Amendments of 1990; Proposed Rule; SIP Requirements; Particulate Matter; Statutory Background; PM-10 Precursors.

10. 57 Federal Register 13,539-40 (April 16, 1992), General Preamble for the Implementation of Title I of the Clean Air Act Amendments of 1990; Proposed Rule; SIP Requirements; Particulate Matter; Statutory Background; RACM/RACT.

11. 57 Federal Register 13,543-4 (April 16, 1992), General Preamble for the Implementation of Title I of the Clean Air Act Amendments of 1990; Proposed Rule; SIP Requirements; Particulate Matter; SIP's That Demonstrate Attainment.

12. " However, the Administrator has not set a schedule for the PM-10 contingency measure submittal. The August 1991 guidance was not issued by the Administrator. Therefore, until the Administrator establishes the due date, States are not obligated to submit contingency measures." Memorandum. John Calcagni, Director, Air Quality Management Division, Office of Air Quality Planning and Standards, U.S. Environmental Protection Agency, Research Triangle Park, NC, to Director, Air Pesticides and Toxics Management Division, Region I and IV; Director, Air and Waste Management Division, Region II; Director, Air, Radiation and Toxics Division, Region III; Director, Air and Radiation Division; Director, Air, Pesticides, and Toxics Division VI; and Director, Air and Toxics Division, Regions VII, VIII, IX, and X. *Contingency Measure Due Date for Initial PM-10 Moderate Nonattainment Areas.* February 25, 1992.

9.3 CURRENT NAAQS AND PSD PROGRAM

9.3.1 National Ambient Air Quality Standards

The EPA is required, under section 109 of the Act, to establish NAAQS for each pollutant for which air quality criteria are established (under Section 108 of the Act). There are two types of NAAQS: primary and secondary. The primary NAAQS are established to protect public health with an adequate margin of safety. The secondary NAAQS protect public welfare (soil, crops, vegetation, animals, visibility, building materials, etc.) from known or anticipated effects. For PM-10, the primary and secondary NAAQS are the same. The current PM-10 NAAQS is 50 $\mu g/m^3$ based on an expected annual arithmetic mean and 150 $\mu g/m^3$ based on the expected maximum 24-hour concentration not to be exceeded more than once per year.[1]

9.3.2 Prevention of Significant Deterioration Program

Part C of Title I of the Act (sections 160-169) establishes the basis for the PSD program. The PSD regulations apply in section 107 areas designated as attainment or unclassifiable. Each applicable SIP must contain emission limitations and other measures as needed to prevent significant deterioration of air quality in such areas.

The PSD permitting program is intended to balance three primary goals. The first of these goals is to protect public health and welfare. This goal includes avoiding air quality degradation in all areas that are attaining the NAAQS. The second goal emphasizes the protection of air quality in national parks, wilderness areas, and similar areas of special concern where air quality is considered particularly important. The third goal is to ensure that economic growth which causes environmental degradation in clean areas occurs only after careful deliberation by State and local communities.

The PSD regulations require that "major" new stationary sources and "major" modifications be carefully reviewed prior to construction to ensure compliance with the NAAQS, the applicable PSD air increments, and the requirement to apply best available control technology (BACT) to minimize the project's emissions of air pollutants.

The PSD permitting program requirements become effective when the net emissions increase for any pollutant emitted by a source is "significant."[2] The significance threshold established for particulate matter is 25 tpy of total particulate matter emissions and 15 tpy of PM-10 emissions.[3] If a source is subject to PSD review, then PSD review will be applied to each pollutant the source emits in greater than *de minimis* amounts, unless the area is designated a nonattainment.

The PSD program is implemented through the use of ambient air quality increments and area classifications that effectively define "significant deterioration" in a given area for individual pollutants. Air quality increments are the maximum allowable increase in ambient air concentration above a baseline concentration. Note that emissions from all sources within the area, including minor sources, are considered for the purpose of establishing increments.

The area classifications establish three classes of geographical areas. Class I areas are regions of special national environmental concern such as national parks. Class II areas are PSD areas not identified in the Act as Class I areas. There are currently no Class III areas.

Table 9-1 shows the current PSD increments for particulate matter.[4]

TABLE 9-1. CURRENT PSD INCREMENTS FOR PM MEASURED AS TSP

Class	Maximum Allowable Increase ($\mu g/m^3$)	
I	5	(TSP, annual geometric mean)
	10	(TSP, 24-hour maximum)
II	19	(TSP, annual geometric mean)
	37	(TSP, 24-hour maximum)
III	37	(TSP, annual geometric mean)
	75	(TSP, 24-hour maximum)

REFERENCES FOR SECTION 9.3

1. U.S. Environmental Protection Agency. *Code of Federal Regulations.* Title 40, Chapter I. Subchapter C, Part 50.6. July 1, 1991.

2. U.S. Environmental Protection Agency. *Code of Federal Regulations.* Title 40, Chapter I. Subchapter C, Part 51.166(b)(2)(i). July 1, 1991.

3. U.S. Environmental Protection Agency. *Code of Federal Regulations.* Title 40, Chapter I. Subchapter C, Part 51.166(b)(23)(i). July 1, 1991.

4. U.S. Congress. Clean Air Act, as amended November 1990. 42 U.S.C 7401 *et. seq.* Section 163(b). Washington, D.C. U.S. Government Printing Office.

9.4 SIP REVISIONS

9.4.1 General

All SIP revisions must include a demonstration that the NAAQS and PSD increments are not violated in the area. Specific requirements for SIP processing are contained in *Guidelines for the Review of SIP Revisions by EPA Regional Offices*.[1]

9.4.2 SIP Completeness

In accordance with the requirements of section 110(k)(1) of the amended Act, EPA has promulgated minimum completeness criteria that any SIP submittal must meet [see 56 FR 23826 and 56 FR 42216]. The minimum completeness criteria serve as a tool for EPA to assess whether a SIP submittal is complete and, therefore, adequate to trigger an EPA review and action on the submittal. The completeness criteria provide criteria and procedures that can be used by States to prepare adequate SIP submittals.[2]

Two categories of criteria have been developed in order to determine whether a submittal by a State is complete: (1) administrative information and (2) technical support information. Administrative information includes the documentation necessary to demonstrate that the State has adhered to basic administrative procedures during the rule adoption process. Technical support information includes the documentation that adequately identifies all of the required technical components of the plan submission. If a submittal is determined to be complete, EPA will inform the State by letter of its determination and then begin the formal review for approvability. If a submittal is determined to be incomplete, EPA will return it to the State with a letter listing the deficiencies. EPA will attempt to make completeness determinations within 60 days of receiving a submittal in accordance with section 110(k)(1)(B) of the amended Act. However, if a completeness determination is not made by EPA within 6 months of its receipt of the submittal, the submittal will be deemed complete.[2]

9.4.3 Approval Options

In the processing of SIP submittals, there are three general situations that can occur related to each required submittal: (1) the State may fail to submit the required plan; (2) the State may make a submittal that is deemed incomplete; or (3) the State may make a complete submittal. If the State fails to make a required submittal or makes a submittal that is determined by EPA to be incomplete, the sanctions and FIP provisions of sections 179 and 110(c) will be triggered. (The sanctions and FIP provisions of the Act are discussed in section 9.5 of this guideline.) If EPA determines that a submittal is complete, it must either approve or disapprove the submittal within a certain period of time.[3] However, in some instances a State's complete SIP submission may include provisions that do not comply with applicable requirements of the Act. In those instances, EPA may issue a partial approval, a limited approval, or a conditional approval.[4,5]

Section 110(k)(3) of the amended Act addresses the situation in which a separable portion of a submittal meets all applicable requirements of the Act. If the disapproved portions of a SIP submittal are separable (*i.e.*, disapproval of a provision does not affect the stringency of other portions of the SIP), EPA will grant a partial approval of the SIP submittal.[5] The disapproval of any part of a SIP submittal starts the clocks for the sanction and FIP requirements.[6]

In some instances, inseparable portions of a SIP submittal may be disapproved. However, if the submittal as a whole has a strengthening effect on the SIP, EPA may grant a limited approval of the SIP submittal.[5,7] The amended Act does not address situations requiring limited approval. Rather, EPA is using its "gap-filling" authority under sections 301(a) and 110(k)(3) to interpret the Act to provide for such actions.[5,8]

Under section 110(k)(4) of the amended Act, EPA may conditionally approve a plan based on a commitment of the State to adopt specific enforceable measures by a specified date within 1 year from the date of approval of the plan revision that incorporated that commitment.[9,10] If EPA determines that the State fails to meet the commitment within that year, the conditional approval would automatically become a disapproval. The sanctions and FIP clocks do not begin to run until the conditional approval becomes a disapproval.[10]

EPA's stated policy is to grant conditional approvals only in rare situations that merit special consideration and after evaluating specific types of SIP submittals. To ensure consistency, EPA's policy is to urge the Regions not to use conditional approvals without input from Headquarters as to whether such an approach is appropriate.[11] In general, the greater the extent to which a submittal is lacking in important plan elements, the less appropriate the use of conditional approval may be. In some cases, EPA may accept a SIP revision consisting of a commitment only (with no specifically adopted rules) as a candidate for conditional approval.[12]

Because conditional approval relies on a commitment from the State, EPA needs to make a determination of whether the State can reasonably be expected to meet its commitment. This determination would be based on consideration of a number of factors including, but not limited to, (1) the amount of technical work necessary for the measures to be adopted; (2) whether the measures are controversial; (3) the average length of the State adoption process and how far along in the process the State is; and (4) the State's past track record.[13] For conditional approvals, sanctions and FIP clocks start if and when the approval is converted to a disapproval.[14]

9.4.4 Grandfathering

Generally, all SIP revisions are evaluated based on the requirements in existence at the time of EPA's rulemaking. However, EPA does have the flexibility to grandfather certain provisions in new regulations if the following conditions are met: (1) the new rule would represent an abrupt departure from existing practice; (2) affected parties must have relied on the old rule; (3) the new rule would impose a large burden on those affected; and (4) there would be little statutory interest in applying the new rule.[15] (For grandfathering of modeling analyses, see Section 6.2.)

Grandfathering is neither mandatory nor automatic. In determining whether to grandfather a State-submitted rule, the decision-maker should focus on whether good-faith efforts were made to comply with the existing rules. Grandfathering should not allow sources to circumvent tighter requirements or agencies to avoid difficult decisions.[16]

Exceptions to the allowance of grandfathering provisions include the following:

- If a court ruling has explicitly changed a current Federal requirement
- If the old regulation or policy was ill-founded
- If it would have substantial adverse environmental impact
- If lack of compliance with the new requirements renders the SIP inadequate for NAAQS attainment[17]

9.4.5 SIP Relaxations

All SIP relaxations should contain the following information in a Federal Register notice and/or technical support document: (1) plant name and location; (2) facility size (including number of units); (3) revised PM-10 emission limit, existing SIP limit, and corresponding averaging times; and (4) actual and "paper" (allowable) emissions decrease or increase.[18]

9.4.6 SIP Tightening

In general, where a SIP revision will result in an emissions decrease at a specific source and there is no other change in the stack parameters, a new control strategy demonstration will not be required.

REFERENCES FOR SECTION 9.4

1. U.S. Environmental Protection Agency, *Guidelines for the Review of SIP Revisions by EPA Regional Offices*. EPA-450/2-89-005, Research Triangle Park, NC, February 1989.

2. 57 Federal Register 13,565 (April 16, 1992), General Preamble for the Implementation of Title I of the Clean Air Act Amendments of 1990; Proposed Rule; EPA Requirements; SIP Processing Requirements; Completeness.

3. "In general, there are three situations that can occur related to each required submittal: the State may fail to submit the required plan, the State may make a submittal that is not complete, or the State may make a complete submittal. Once a State submits a SIP and EPA has determined that the submittal is complete, EPA must either approve or disapprove the submittal within a specified time period. However, if the State fails to make a required submittal or makes a submittal that is determined to be incomplete, the sanctions and FIP provisions of section 179 and 110(c), respectively, will be triggered." Memorandum from Calcagni, John, Director, Air Quality Management Division, OAQPS, U.S. EPA, Research Triangle Park, NC, to Director, Air, Pesticides, and Toxics Management Division, Regions I and IV; Director, Air and Waste Management Division, Region II; Director, Air, Radiation, and Toxics Division, Region III; Director, Air and Radiation Division, Region V; Director, Air, Pesticides and Toxics Division, Region VI; Director, Air and Toxics Division, Regions VII, VIII,IX, and X. Processing of State Implementation Plan (SIP) Submittals. July 9, 1992.

4. "There are, however, three alternatives to full approval or full disapproval of a complete SIP submittal: partial approval, limited approval, and conditional approval." Memorandum from Calcagni, John, Director, Air Quality Management Division, OAQPS, U.S. EPA, Research Triangle Park, NC, to Director, Air, Pesticides, and Toxics Management Division, Regions I and IV; Director, Air and Waste Management Division, Region II; Director, Air, Radiation, and Toxics Division, Region III; Director, Air and Radiation Division, Region V; Director, Air, Pesticides and Toxics Division, Region VI; Director, Air and Toxics Division, Regions VII, VIII,IX, and X. Processing of State Implementation Plan (SIP) Submittals. July 9, 1992.

5. 57 Federal Register 13,565-6 (April 16, 1992), General Preamble for the Implementation of Title I of the Clean Air Act Amendments of 1990; Proposed Rule; EPA Requirements; SIP Processing Requirements; Partial Approvals; Full, Partial, and Limited Approval and Disapproval.

6. "In the case where a separable portion of the submittal meets all of the applicable requirements, partial approval may be used to approve that part of the submittal and disapprove the remainder. It is important that the two parts of the submittal be

separable. The EPA can approve some of the rules and disapprove the rest as long as the rules that are disapproved do not affect those that are approved. The disapproval of any part of a required SIP submittal starts the clocks discussed above for sanctions and FIP's." Memorandum from Calcagni, John, Director, Air Quality Management Division, OAQPS, U.S. EPA, Research Triangle Park, NC, to Director, Air, Pesticides, and Toxics Management Division, Regions I and IV; Director, Air and Waste Management Division, Region II; Director, Air, Radiation, and Toxics Division, Region III; Director, Air and Radiation Division, Region V; Director, Air, Pesticides and Toxics Division, Region VI; Director, Air and Toxics Division, Regions VII, VIII,IX, and X. Processing of State Implementation Plan (SIP) Submittals. July 9, 1992.

7. "In some cases, a submittal may contain certain provisions that meet the applicable requirements of the Act along with other provisions that do not meet the requirements, and the provisions are not separable. Although a submittal may not meet all of the applicable requirements, EPA may want to consider whether the submittal as a whole has strengthening effect on the SIP. If this is the case, limited approval may be used to approve a rule that strengthens the existing SIP as representing an improvement over what is currently in the SIP and as meeting some of the applicable requirements of the Act." Memorandum from Calcagni, John, Director, Air Quality Management Division, OAQPS, U.S. EPA, Research Triangle Park, NC, to Director, Air, Pesticides, and Toxics Management Division, Regions I and IV; Director, Air and Waste Management Division, Region II; Director, Air, Radiation, and Toxics Division, Region III; Director, Air and Radiation Division, Region V; Director, Air, Pesticides and Toxics Division, Region VI; Director, Air and Toxics Division, Regions VII, VIII,IX, and X. Processing of State Implementation Plan (SIP) Submittals. July 9, 1992.

8. "The Act does not expressly provide for limited approvals. Rather, EPA is using its 'gap-filling' authority under section 301(a) of the Act in conjunction with section 110(k)(3) approval provision to interpret the Act to provide for this type of approval action. . . A key distinction between the limited approval and a partial approval is that under a limited approval EPA's approval action goes to the entire rule. In other words, although portions of a rule prevent EPA from finding that the rule meets a certain requirement of the Act, EPA believes that the rule, as a whole, strengthens the SIP. Therefore, EPA approves the entire rule -- even those portions that prohibit full approval. Likewise, when EPA issues the limited disapproval, the disapproval applies to the entire rule as failing to meet a specific requirement of the Act. The rule remains a part of the SIP, however, under the limited disapproval, because the rule strengthens the SIP. The primary advantage of using the limited approval approach is to make the State submittal federally enforceable and to increase the SIP's potential to achieve additional reductions. Therefore, limited approval should not be used to approve any rule that is unenforceable for all situations. These rules and any other rules that do not have an overall strengthening effect on the SIP should be disapproved. Limited approval can be used, however, where the rule is unenforceable for some limited number of situations but is enforceable for the majority of situations,

if the rule, as a whole, strengthens the SIP . . . The disapproval coinciding with (or following) the limited approval also starts the sanctions and FIP clocks discussed above." Memorandum from Calcagni, John, Director, Air Quality Management Division, OAQPS, U.S. EPA, Research Triangle Park, NC, to Director, Air, Pesticides, and Toxics Management Division, Regions I and IV; Director, Air and Waste Management Division, Region II; Director, Air, Radiation, and Toxics Division, Region III; Director, Air and Radiation Division, Region V; Director, Air, Pesticides and Toxics Division, Region VI; Director, Air and Toxics Division, Regions VII, VIII,IX, and X. Processing of State Implementation Plan (SIP) Submittals. July 9, 1992.

9. "Under section 110(k)(4) of the Act EPA may conditionally approve a plan based on a commitment from the State to adopt specific enforceable measures within 1 year from the date of approval." Memorandum from Calcagni, John, Director, Air Quality Management Division, OAQPS, U.S. EPA, Research Triangle Park, NC, to Director, Air, Pesticides, and Toxics Management Division, Regions I and IV; Director, Air and Waste Management Division, Region II; Director, Air, Radiation, and Toxics Division, Region III; Director, Air and Radiation Division, Region V; Director, Air, Pesticides and Toxics Division, Region VI; Director, Air and Toxics Division, Regions VII, VIII,IX, and X. Processing of State Implementation Plan (SIP) Submittals. July 9, 1992.

10. 57 Federal Register 13,566 (April 16, 1992), General Preamble for the Implementation of Title I of the Clean Air Act Amendments of 1990; Proposed Rule; EPA Requirements; SIP Processing Requirements; Partial Approvals; Conditional Approval.

11. "We will evaluate specific types of SIP submittals [*e.g.*, reasonable available control technology (RACT) catch-ups, particles with aerodynamic diameter less than or equal to a nominal 10 micrometers (PM-10) SIP's] to determine whether certain elements of that type of submittal, or that type of submittal as a whole, merit conditional approval. For this reason and to ensure consistency, Regions should not use conditional approvals without input from Headquarters as to whether such an approach is appropriate." Memorandum from Calcagni, John, Director, Air Quality Management Division, OAQPS, U.S. EPA, Research Triangle Park, NC, to Director, Air, Pesticides, and Toxics Management Division, Regions I and IV; Director, Air and Waste Management Division, Region II; Director, Air, Radiation, and Toxics Division, Region III; Director, Air and Radiation Division, Region V; Director, Air, Pesticides and Toxics Division, Region VI; Director, Air and Toxics Division, Regions VII, VIII,IX, and X. Processing of State Implementation Plan (SIP) Submittals. July 9, 1992.

12. "As a general matter, the greater the extent to which a submittal is lacking in important plan elements, the less appropriate the use of conditional approval may be. It should be noted however, that there may be circumstances under which EPA would accept a SIP revision consisting of a commitment only (without specifically adopted rules) as a candidate for conditional approval. In such cases, the commitment should

also be accompanied by a work plan detailing any specific measures to be adopted, the steps that will be taken to adopt the measures, and the schedule for adoption of those measures. As stated earlier, a submittal that consists entirely of a commitment will be considered a SIP revision that is subject to the State process for submitting SIP revisions. Where the submittal contains specifically adopted rules that need some revisions or corrections to be fully-approvable, the commitment may not need to be as comprehensive. The commitment should, however, be as explicit as possible concerning the measures that will be adopted, the steps that will be taken to adopt the measures, and the schedule for adoption of those measures." Memorandum from Calcagni, John, Director, Air Quality Management Division, OAQPS, U.S. EPA, Research Triangle Park, NC, to Director, Air, Pesticides, and Toxics Management Division, Regions I and IV; Director, Air and Waste Management Division, Region II; Director, Air, Radiation, and Toxics Division, Region III; Director, Air and Radiation Division, Region V; Director, Air, Pesticides and Toxics Division, Region VI; Director, Air and Toxics Division, Regions VII, VIII,IX, and X. Processing of State Implementation Plan (SIP) Submittals. July 9, 1992.

13. "Because the conditional approval relies on a commitment from the State, EPA would need some level of confidence that the State would be able to meet such a commitment. In making a determination as to whether a State could reasonably be expected to meet its commitment, EPA would need to consider a number of factors such as: the amount of technical work necessary for measures to be adopted; whether adoption of the measures is expected to be controversial; the average length of the State adoption process; how far along in the process the State is; and the State's past track record. It should be noted that these are only some of the factors that should be considered. Each Region, in making a determination regarding the credibility of the State's commitment, may have to look at a number of other factors." Memorandum from Calcagni, John, Director, Air Quality Management Division, OAQPS, U.S. EPA, Research Triangle Park, NC, to Director, Air, Pesticides, and Toxics Management Division, Regions I and IV; Director, Air and Waste Management Division, Region II; Director, Air, Radiation, and Toxics Division, Region III; Director, Air and Radiation Division, Region V; Director, Air, Pesticides and Toxics Division, Region VI; Director, Air and Toxics Division, Regions VII, VIII,IX, and X. Processing of State Implementation Plan (SIP) Submittals. July 9, 1992.

14. "Unlike the limited approval/disapproval, the conditional approval does not immediately start the sanctions and FIP clocks. These clocks start if and when the approval is converted to a disapproval. There are at least two ways that the conditional approval may be converted to a disapproval. There are at least two ways that the conditional approval may be converted to a disapproval. First, if the State fails to adopt and submit the specified measures by the end of 1 year (from the final conditional approval), or fails to submit anything at all, EPA will have to issue a finding of disapproval but will not have to propose the disapproval . . . Therefore, at the end of 1 year from the conditional approval, the Regional Administrator (RA) will send a letter to the State finding that it had failed to meet its commitment and that the SIP submittal is disapproved. The 18-month clock for sanctions and the 2-year clock

for FIP start as of the date of the letter. Subsequently, a notice to that effect will be published in the Federal Register, and appropriate language will be inserted in the Code of Federal Regulations. Similarly, if EPA receives a submittal addressing the commitment but determines that the submittal is incomplete, the RA will send a letter to the State making such a finding. As with the failure to submit, the sanctions and FIP clocks will begin as of the date of the finding letter. Second, where the State does make a complete submittal by the end of the 1-year period, EPA will have to evaluate that submittal to determine if it may be approved and take final action on the submittal within 12 months after the date EPA determines the submittal is complete. If the submittal does not adequately address the deficiencies that were the subject of the conditional approval, and is therefore not approvable, EPA will have to go through notice-and-comment rulemaking to disapprove the submittal. The 18-month clock for sanctions and the 2-year clock for a FIP start as of the date of final disapproval." Memorandum from Calcagni, John, Director, Air Quality Management Division, OAQPS, U.S. EPA, Research Triangle Park, NC, to Director, Air, Pesticides, and Toxics Management Division, Regions I and IV; Director, Air and Waste Management Division, Region II; Director, Air, Radiation, and Toxics Division, Region III; Director, Air and Radiation Division, Region V; Director, Air, Pesticides and Toxics Division, Region VI; Director, Air and Toxics Division, Regions VII, VIII,IX, and X. Processing of State Implementation Plan (SIP) Submittals. July 9, 1992.

15. "However, an agency does have some flexibility to provide grandfathering provisions in new regulations. Generally, such provisions are appropriate where they meet a four-part test. First, the new rule represents an abrupt departure from well-established practice. Second, affected parties have relied on the old rule. Third, the new rule imposes a large burden on those affected. Fourth, there is no strong statutory interest in applying the new rule." Memorandum from Emison, G.A., OAQPS, to Director, Air Management Division Regions I, III, and IX; Director, Air, and Waste Management Division, Region II; Director, Air Pesticides and Toxics Division Region IV and VI; Director, Air and Radiation Division Region V; and Director Air and Toxics Division, Regions VII, VIII, and X. June 27, 1988. (PN 110-88-06-27-095).

16. "Grandfathering is not to be considered mandatory or automatic. In determining whether grandfathering should apply, and what the appropriate date should be, the decision maker should keep in mind the thrust of this guidance, *i.e.*, to honor good faith effort on the part of the State/local agency submitting the revision, balancing equity with other considerations. This guidance expressly is not intended as a vehicle to allow circumvention of tighter requirements or to facilitate the avoidance of difficult decisions." Memorandum from Emison, G.A., OAQPS, to Director, Air Management Division Regions I, III, and IX; Director, Air, and Waste Management Division, Region II; Director, Air Pesticides and Toxics Division Region IV and VI; Director, Air and Radiation Division Region V; and Director Air and Toxics Division, Regions VII, VIII, and X. June 27, 1988. (PN 110-88-06-27-095).

17. "B. There are certain exceptions to the general grandfathering guidance:" Items 2,3,4 and 6. Memorandum from Emison, G.A., OAQPS, to Director, Air Management Division Regions I, III, and IX; Director, Air, and Waste Management Division, Region II; Director, Air Pesticides and Toxics Division Region IV and VI; Director, Air and Radiation Division Region V; and Director Air and Toxics Division, Regions VII, VIII, and X. June 27, 1988. (PN 110-88-06-27-095).

18. "In order to allow us to assess the relative impact of each SO_2 relaxation more accurately, I ask that the following information be included in each action memo.

    1. Plant name and location.

    2. Size of the facility (including the number of boilers) expressed in megawatts or Btu/hour firing capacity (design).

    3. Amount, type, and sulfur content of actual fuel combusted during the previous year.

    4. The revised SO_2 emission limit, the existing SIP limit, and the corresponding averaging times for these limits.

    5. The "paper" as well as actual increase or decrease in emissions.

    Memorandum from Rhoads, R.G., OAQPS, to Director, Air and Hazardous Materials Division, Regions I-V and VIII. Information Required in Federal Register Packages. June 12, 1980.

9.5 SANCTIONS AND FIP REQUIREMENTS

Section 179(a) of the amended Act sets forth specific criteria for EPA to determine when to apply sanctions. Two types of sanctions are specified under section 179(b): (1) highway funding restrictions, and (2) increased emissions offset ratios for new and modified sources. A third type of sanction, restrictions on air grant funding, is provided for under section 179(a). The construction ban provisions of section 110(a)(2)(I) of the 1977 Clean Air Act Amendments were largely repealed with the passage of the amended Act in 1990.[1]

9.5.1 Actions Triggering Sanctions and FIP Requirements

Section 179(a) (1) through (4) of the amended Act sets forth four types of findings which may trigger sanctions. The first is a finding that a State has failed to submit a SIP or an element of a SIP, or that the submittal fails to meet the completeness criteria. The second is a finding that a SIP submission for a nonattainment area is disapproved for failure to meet one or more elements of the plan required by the Act. The third is a finding that the State has not made any other submission required by the Act that meets the completeness criteria or has made a required submission that is disapproved by EPA for not meeting the Act's requirements. The fourth is a finding that a requirement of an approved plan is not being implemented.[1,2]

Section 110(c) sets forth two types of findings that trigger FIP requirements: (1) a finding that a State has failed to make a required submittal or that a submittal does not satisfy the minimum completeness criteria under section 110(k)(1)(A), and (2) a disapproval of a SIP submittal in whole or in part.[3]

9.5.2 Sanction and FIP Clocks

The amended Act provides a "clock" for imposing sanctions and FIP requirements. Section 179(a) allows up to 18 months for the State to correct the deficiency that triggered EPA's disapproval before EPA must impose sanctions. Section 110(c)(1) gives the State two years to correct a deficiency and EPA to approve a new submittal before EPA is obligated to promulgate a FIP.[4]

The sanctions clock, triggered under section 179(a), stops when the State corrects the deficiency prompting the finding. Unless the deficiency is corrected the EPA must apply one of the two sanctions specified under section 179(b) 18 months after the date of the finding. If the deficiency persists, EPA must apply the second sanction 6 months later. EPA must apply both sanctions after 18 months if it determines there is a lack of good faith on the part of the State.[5] The FIP clock can be stopped only if the State corrects the deficiency prompting the finding and EPA issues a final approval of the State submittal.[6]

9.5.3 Available Sanctions

The two sanctions available to EPA are provided under section 179(b) and include restriction on highway funding, and a 2 to 1 emission offset requirement. Under the highway funding sanction, EPA prohibits approval by the Secretary of Transportation of projects or grants in the affected area.[7] Section 179(b)(1) of the amended Act provides exemptions for certain projects and grants for air quality or safety purposes.[8]

The emissions offset sanction refers to the application of the emission offset requirements of section 173 relating to new or modified sources. Under this sanction, the ratio of emissions reductions that must be obtained to offset increased emissions (caused by the new or modified source) in the sanctioned area must be at least 2 to 1.[8,9]

REFERENCES FOR SECTION 9.5

1. 57 Federal Register 13,566 (April 16, 1992), General Preamble for the Implementation of Title I of the Clean Air Act Amendments of 1990; Proposed Rule; EPA Requirements; Sanctions and Other Safeguards; Available Measures Under 1990 CAAA.

2. "The Act in section 179 requires EPA to impose sanctions based on four types of actions (findings) provided in section 179(a): (1) a finding that the State has failed to submit a SIP, a SIP element, or has submitted a SIP or SIP element that does not satisfy the completeness criteria; (2) that EPA disapproval of a SIP submission for a nonattainment area based on its failure to meet one or more elements required by the Act; (3) a determination that the State has not made any other submission, has made an inadequate submission (as required by the Act), or that EPA disapproves such submission; or (4) a finding that a requirement of an approved plan is not being implemented." Memorandum from Calcagni, John, Director, Air Quality Management Division, OAQPS, U.S. EPA, Research Triangle Park, NC, to Director, Air, Pesticides, and Toxics Management Division, Regions I and IV; Director, Air and Waste Management Division, Region II; Director, Air, Radiation, and Toxics Division, Region III; Director, Air and Radiation Division, Region V; Director, Air, Pesticides and Toxics Division, Region VI; Director, Air and Toxics Division, Regions VII, VIII,IX, and X. Processing of State Implementation Plan (SIP) Submittals. July 9, 1992.

3. "Under section 110(c)(1), EPA is required to promulgate a FIP based on two types of findings: (1) a finding that a State has failed to make a required submittal or that a submittal does not satisfy the minimum completeness criteria under section 110(k)(1)(A), or the EPA disapproval of a SIP submittal in whole or in part." Memorandum from Calcagni, John, Director, Air Quality Management Division, OAQPS, U.S. EPA, Research Triangle Park, NC, to Director, Air, Pesticides, and Toxics Management Division, Regions I and IV; Director, Air and Waste Management Division, Region II; Director, Air, Radiation, and Toxics Division, Region III; Director, Air and Radiation Division, Region V; Director, Air, Pesticides and Toxics Division, Region VI; Director, Air and Toxics Division, Regions VII, VIII,IX, and X. Processing of State Implementation Plan (SIP) Submittals. July 9, 1992.

4. "For plan submittals required under Part D or in response to a SIP call, section 179(a) allows for up to 18 months for the State to correct the deficiency that is the subject of a finding or disapproval before EPA is required to impose sanctions. Section 110(c)(1) provides for up to 2 years for the State to correct the deficiency and for EPA to approve a new submittal before EPA is obligated to promulgated a FIP." Memorandum from Calcagni, John, Director, Air Quality Management Division, OAQPS, U.S. EPA, Research Triangle Park, NC, to Director, Air, Pesticides, and Toxics Management Division, Regions I and IV; Director, Air and Waste Management Division, Region II; Director, Air, Radiation, and Toxics Division, Region III; Director, Air and Radiation Division, Region V; Director, Air, Pesticides and Toxics

Division, Region VI; Director, Air and Toxics Division, Regions VII, VIII,IX, and X. Processing of State Implementation Plan (SIP) Submittals. July 9, 1992.

5. "Under section 179(a), in order to stop the sanctions clock, the State must correct the 'deficiency' prompting the finding. The EPA must apply one of the two sanctions available under section 179(b) within 18 months after the date of the finding and both sanctions at 24 months, unless the deficiency has been corrected. Section 179(a) also requires EPA to apply both sanctions after 18 months if EPA finds a lack of good faith on the part of the State." Memorandum from Calcagni, John, Director, Air Quality Management Division, OAQPS, U.S. EPA, Research Triangle Park, NC, to Director, Air, Pesticides, and Toxics Management Division, Regions I and IV; Director, Air and Waste Management Division, Region II; Director, Air, Radiation, and Toxics Division, Region III; Director, Air and Radiation Division, Region V; Director, Air, Pesticides and Toxics Division, Region VI; Director, Air and Toxics Division, Regions VII, VIII,IX, and X. Processing of State Implementation Plan (SIP) Submittals. July 9, 1992.

6. "In other words, EPA must approve the State submittal in order to stop the FIP clock. Where the sanctions and FIP clocks were started by EPA disapproval of a plan, the clocks will run concurrently. In this case, to correct the deficiency for purposes of the sanctions clock, the State must make a submittal which EPA finds approvable. Such a determination is not made until EPA issues a final approval of the plan. Final approval of a plan is also what is needed to stop the FIP clock." Memorandum from Calcagni, John, Director, Air Quality Management Division, OAQPS, U.S. EPA, Research Triangle Park, NC, to Director, Air, Pesticides, and Toxics Management Division, Regions I and IV; Director, Air and Waste Management Division, Region II; Director, Air, Radiation, and Toxics Division, Region III; Director, Air and Radiation Division, Region V; Director, Air, Pesticides and Toxics Division, Region VI; Director, Air and Toxics Division, Regions VII, VIII,IX, and X. Processing of State Implementation Plan (SIP) Submittals. July 9, 1992.

7. "For plan submittals required under Part D or in response to a SIP call, if the State does not correct the specific deficiency within the 18-month period allowed under section 179(a), EPA must apply at least one of the two sanctions available under section 179(b) as described: (1) Highway funding sanctions: The EPA may impose a prohibition on the approval by the Secretary of Transportation of certain projects, or the awarding of certain grants." Memorandum from Calcagni, John, Director, Air Quality Management Division, OAQPS, U.S. EPA, Research Triangle Park, NC, to Director, Air, Pesticides, and Toxics Management Division, Regions I and IV; Director, Air and Waste Management Division, Region II; Director, Air, Radiation, and Toxics Division, Region III; Director, Air and Radiation Division, Region V; Director, Air, Pesticides and Toxics Division, Region VI; Director, Air and Toxics Division, Regions VII, VIII,IX, and X. Processing of State Implementation Plan (SIP) Submittals. July 9, 1992.

8. 57 Federal Register 13,566 (April 16, 1992), General Preamble for the Implementation of Title I of the Clean Air Act Amendments of 1990; Proposed Rule; EPA Requirements; Sanctions and Other Safeguards; Available Measures Under 1990 CAAA; Highway Funding Sanctions.

9. "(2) Offset sanctions. A ratio of at least 2-to-1 will be required for emissions reductions within the nonattainment area to offset emissions from new or modified major facilities (as required under section 173)." Memorandum from Calcagni, John, Director, Air Quality Management Division, OAQPS, U.S. EPA, Research Triangle Park, NC, to Director, Air, Pesticides, and Toxics Management Division, Regions I and IV; Director, Air and Waste Management Division, Region II; Director, Air, Radiation, and Toxics Division, Region III; Director, Air and Radiation Division, Region V; Director, Air, Pesticides and Toxics Division, Region VI; Director, Air and Toxics Division, Regions VII, VIII,IX, and X. Processing of State Implementation Plan (SIP) Submittals. July 9, 1992.

9.6 INTERIM CONTROL STRATEGIES

In certain situations, air pollution control equipment may need to be repaired, upgraded or replaced to meet the applicable emission limitations in a revised SIP. During the period until new or upgraded control equipment is operational and the source is in compliance, emissions from the source must not be allowed to increase. The existing control equipment must remain operational to the maximum extent possible, with appropriate maintenance and repair, until construction or linking of new equipment requires its shutdown or removal. A source may choose to implement interim controls that offer a higher degree of emission reduction instead of maintaining existing equipment. However, the use of such interim controls should not be allowed to unnecessarily delay the installation of final control equipment.[1]

Additional interim controls or other interim measures are required to prevent excess emissions during periods when existing control equipment must be taken off line to link or complete construction of new or upgraded equipment. Such measures may include installing additional temporary control equipment or operational controls (such as curtailing production rates, relocating production to complying process lines, "purchasing power or product elsewhere," or temporary shutdown).[2]

The source should also be required to implement an interim continuous emissions monitoring program. This will enable the agency to monitor emissions from the source during the interim period.[3]

REFERENCES FOR SECTION 9.6

1. "During the interim period until the new or upgraded control equipment is operational and the source is in compliance, emissions from the source must not be allowed to increase. The existing though inadequate control equipment must remain operational to the maximum extent possible, including being maintained and repaired, until such time that construction or tie-in of new equipment requires its shut down or removal. In lieu of maintaining the existing though inadequate control equipment, interim controls which offer a higher degree of emission reduction and are readily and reasonably available may be installed. The use of such interim controls shall not unduly delay the installation of final control equipment." Memorandum. Seitz, John S., Director, Stationary Source Compliance Division, OAQPS, U.S. EPA, Washington, DC, to Air Management Division Directors, Regions I, III, and IX; Air and Waste Management Division Director, Region II; Air, Pesticides and Toxics Management Division Directors, Regions IV and VI; Air and Toxics Division Directors, Regions VII, VIII and X; and Air and Radiation Division Director, Region V. Transmittal of OAQPS Interim Control Policy Statement. March 31, 1988. (PN 113-88-03-31-047).

2. "When existing control equipment must be taken off line to tie in or complete construction of new or upgraded equipment, additional interim controls or other interim measures are required to ensure no increase in excess emissions occurs during the tie in period. Such measures may include installation of additional temporary control equipment or operational controls, *e.g.*, curtailment of production rates, relocation of production to complying process lines or facilities, purchase of power or product elsewhere as needed, or temporary shutdown." Memorandum. Seitz, John S., Director, Stationary Source Compliance Division, OAQPS, U.S. EPA, Washington, DC, to Air Management Division Directors, Regions I, III, and IX; Air and Waste Management Division Director, Region II; Air, Pesticides and Toxics Management Division Directors, Regions IV and VI; Air and Toxics Division Directors, Regions Vii, VIII and X; and Air and Radiation Division Director, Region V. Transmittal of OAQPS Interim Control Policy Statement. March 31, 1988. (PN 113-88-03-31-047).

3. "The source should also be required to implement an interim continuous emissions monitoring program, to enable the agency to monitor the emissions performance of the source during the interim period." Memorandum. Seitz, John S., Director, Stationary Source Compliance Division, OAQPS, U.S. EPA, Washington, DC, to Air Management Division Directors, Regions I, III, and IX; Air and Waste Management Division Director, Region II; Air, Pesticides and Toxics Management Division Directors, Regions IV and VI; Air and Toxics Division Directors, Regions Vii, VIII and X; and Air and Radiation Division Director, Region V. Transmittal of OAQPS Interim Control Policy Statement. March 31, 1988. (PN 113-88-03-31-047).

9.7 SIP CALLS

In accordance with Section 110(k)(5) of the amended Act, the Administrator shall require the State to revise the SIP as necessary if the Administrator determines that the applicable implementation plan for any area is substantially inadequate to attain or maintain the relevant NAAQS. The Administrator shall establish deadlines (18 months maximum after date of notice) for the submittal of revised plans. Inadequate plan findings and notice shall be public.

Section 110(a)(2)(H) requires that SIP's provide for plan revisions as necessary to take account of NAAQS revisions or the availability of improved or more expeditious methods for attaining the standards. Such revisions should also be provided for should the Administrator find that the plan is substantially inadequate to attain the applicable NAAQS, or to otherwise comply with any additional requirements of the Act. Relevant exceptions to these requirements for plan revisions are set forth in section 110(a)(3)(C).

Plan revisions for nonattainment areas are addressed in part D of Title I of the Act. Any plan revision for a nonattainment area that is required in response to a section 110(k)(5) finding must correct the plan deficiency and meet all other applicable plan requirements under sections 110(a)(2) and part D of the Act. EPA may reasonably adjust the applicable deadlines to achieve a consistent application of plan requirements if the applicable attainment date has elapsed. EPA will issue written guidelines, as necessary, to facilitate submittal of adequate and approvable plans.

10.0 PERMIT REQUIREMENTS

The discussion below pertains to permit requirements for construction and operation of major new or modified sources. Title V of the Clean Air Act of 1990, however, does include provisions for establishing State-administered operating permit programs. The EPA has promulgated regulations containing the minimum elements necessary for federally enforceable operating permit programs,[1] while EPA has not reached a final determination about the relationship between SIP's and Title V permits.[2] Operating permits may, among other things, largely codify present SIP regulations. For this reason, it is important that SIP's are adequate and enforceable before operating permit programs are in place. The operating permit program is not discussed in this guideline.

10.1 GENERAL

Major new sources and existing sources that have undergone major modifications are generally required to obtain air pollution permits prior to construction/modification and operation. Permits are required to assure that sources do not jeopardize plans to attain or maintain NAAQS or PSD increments. The requirements for these permits vary depending on the size and location of the proposed source. For a complete compendium of new source review and permitting guidance see *New Source Review/Prevention of Significant Deterioration and Nonattainment Area Guidance* Notebook.[3] Additional information is available on the New Source Review Electronic Bulletin Board and the *New Source Review Workshop Manual.*[4]

REFERENCES FOR SECTION 10.1

1. 57 Federal Register 32,250 (July 21, 1992), Operating Permit Program.

2. 57 Federal Register 13,567-9 (April 16, 1992), General Preamble for the Implementation of Title I of the Clean Air Act Amendments of 1990; Proposed Rule; Miscellaneous.

3. U.S. Environmental Protection Agency. *New Source Review/Prevention of Significant Deterioration and Nonattainment Area Guidance Notebook, Volumes I and II and Updates.*

4. U.S. Environmental Protection Agency. *New Source Review Workshop Manual, (Draft).* Office of Air Quality Planning and Standards, Research Triangle Park, NC 27711. October 1990. pp. F.2-F.4.

10.2 NONATTAINMENT AREAS

10.2.1 Applicability

All new or modified major stationary sources located within an area designated under section 107 of the Act as nonattainment are required to obtain permits for construction and operation that meet the requirements of section 173. Major PM-10 sources in moderate PM-10 nonattainment areas are sources that have the potential to emit greater than 100 tpy; major modifications occur if they increase emissions by a significant amount.[1]

10.2.2 Control Technology Requirements

All major sources subject to nonattainment area new source review requirements are required to control emissions to a degree that reflects the lowest achievable emission rate (LAER).[2] LAER is defined as the most stringent emission control actually achieved in practice or contained in any SIP regulations. These control techniques must be applied to the proposed new source unless they are demonstrated to be technically infeasible, cost considerations notwithstanding.[3]

10.2.3 Emission Offsets

Offsetting emission reductions in actual emissions for sources locating in nonattainment areas must be obtained to offset increases in allowable emissions that result after the application of LAER.[4]

The emission offset must exceed the net increase from the proposed source and the source growth previously accounted for so that reasonable progress toward attainment of the NAAQS continues. Consistent with provisions of 40 CFR 51.165(a), new sources for which emission offsets are required must also comply with procedures relating to the permissible location of offsetting emissions, which are equivalent or more stringent than those set out in 40 CFR Part 51 Appendix S section IV.D.

10.2.4 Net Air Quality Benefit

For those sources that do not satisfy the location requirements for the emission offsets as specified in 40 CFR Part 51 Appendix S section IV.D, a net air quality benefit must be demonstrated.[5] This demonstration is made with a modeling analysis that predicts that the proposed emission increase LAER and emission offsets proposed will not increase the concentration at an agreed upon number of receptors where NAAQS exceedances have been identified and will not significantly increase the concentration at all other receptors where NAAQS exceedances have been identified.

10.2.5 Other Requirements

Any applicant for a new source permit within a nonattainment area must certify that all other major stationary sources owned or operated by the applicant are in compliance with applicable air quality regulations. Compliance includes being on an approved compliance schedule.[6] An analysis of alternative sites, sizes, production processes, and environmental control techniques is required to demonstrate that the benefits of the proposed source outweigh the environmental and social costs imposed as a result of its location, construction, and modification.[7]

10.2.6 NSR Transition

The amended Act makes numerous changes to the NSR requirements for nonattainment and PSD programs. These include creation of new and expanded nonattainment areas, extension of PSD coverage to Class I area boundaries, and a mandate for a PSD exemption for certain hazardous air pollutants. The EPA has provided its interpretation of the new or revised NSR nonattainment permit program requirements contained in Part D of the amended Act in the *General Preamble*, New Source Review Nonattainment Permit Requirements. The EPA intends to issue regulations setting forth specific requirements for an approvable NSR program.[8]

EPA has published transitional guidance on the most important issues involving the NSR program to be used in preparing SIP revisions in the interim between passage of the amended Act and adoption of the Agency's final regulations. This guidance appeared in a March 11, 1991 memorandum and is published in Appendix D of the *General Preamble*. The transitional guidance is not intended to replace existing State regulations or approved SIP's; however, it calls upon States to implement their NSR programs consistent with provisions of the amended Act that are applicable immediately.[9] The transitional guidance, since it does not represent final EPA action, has not been subject to judicial review and is not intended, and cannot be relied upon, to create any rights enforceable in litigation with the United States. The EPA may decide to follow the transitional guidance, or to act at variance with it based on specific circumstances. The Agency may also change the guidance at any time without public notice.[10]

Major issues relating to NSR PM-10 nonattainment dealt with in the transitional guidance include the following:

- *NSR construction permit requirements in nonattainment areas*. In States where the existing Part D permit program covers all designated nonattainment areas in the State, the program will automatically cover any new or expanded areas under the amended Act and States should apply the requirements of their existing programs. In other States, where a Part D program may be limited to specific areas and does not apply to new or expanded areas, States must implement a transitional permit program until their existing programs are revised to meet the requirements of the amended Act, and expanded to cover all nonattainment areas in the State.[11]

- *Status of construction bans*. An existing construction ban that was imposed due to the absence of approved Part D NSR rules remains in effect until a revised NSR SIP is approved. Specific construction bans may be lifted where appropriate. The status of construction bans in general will be published in the Federal Register. If a construction ban is lifted in a nonattainment area, and the area lacks an approved Part D NSR rule, the State should meet the requirements of appendix S to 40 CFR part 51 in issuing permits for major new sources or major modifications until NSR rules meeting the requirements of the amended Act are adopted.[12]

- *Federal implementation plans*. The NSR permitting program in an existing FIP remains in effect until a SIP is approved or a revised FIP is adopted.[13]

- *Use of previously approved growth allowances*. Growth allowances in existing SIP's are invalidated [pursuant to section 173 (b) of the amended Act] in areas where a SIP call has been received either before or after enactment of the 1990 Amendments. In such areas, previously approved growth allowances cannot be used for NSR permits

> issued on or after November 15, 1990. Construction permits that rely on previously approved growth allowances cannot be issued in SIP call areas under existing, approved Part D programs. Emission offsets must be obtained on a case by case basis for any such permits, and any other existing Part D requirements must be met.[14]

In a September 3, 1992 memorandum, the EPA provided a supplement to the transitional guidance in order to clarify EPA's position regarding the NSR permitting when a State does not submit a SIP revision implementing the additional Part D NSR provisions of the amended Act by the applicable statutory deadline. For PM-10, the statutory submittal deadline for such revisions was June 30, 1992. This supplemental guidance is nonbinding in the same sense as the initial transition guidance and does not affect EPA's interpretations of NSR provisions in the amended Act as published in the *General Preamble*.[15]

The supplemental guidance addresses conditions under which permits may be issued to sources and obtain EPA recognition as being in compliance with the Act. In general, sources that have submitted complete permit applications by the submittal deadline may receive permits and be recognized as complying with the Act, provided that specific conditions are met. These conditions are spelled out in the guidance.[16] Sources that have not completed applications by the submittal deadline may be considered as complying with the Act provided that the source obtains a permit from the State that is consistent with the substantive new NSR Part D provisions. Those applicable to PM-10 include new applicability thresholds, offset ratios, and section 173 offset requirements.[17] This guidance does not overrule any State rules or transitional guidance that may be more stringent.[18]

REFERENCES FOR SECTION 10.2

1. U.S. Environmental Protection Agency. *Code of Federal Regulations*. Title 40, Chapter I. Subchapter C, Part 51.165(a)(1)(iv). July 1, 1991.

2. U.S. Congress. Clean Air Act, as amended November 1990. 42 U.S.C. 7401 et. seq. Section 171(3). Washington, D.C. U.S. Government Printing Office.

3. U.S. Environmental Protection Agency. *Code of Federal Regulations*. Title 40, Chapter I, Subchapter C, Part 51. Appendix S. July 1, 1991.

4. U.S. Congress. Clean Air Act, as amended November 1990. 42 U.S.C. 7401 et. seq. Section 173(a). Washington, D.C. U.S. Government Printing Office. (See also U.S. Environmental Protection Agency. *Code of Federal Regulations*. Title 40, Chapter I, Subchapter C, Part 51. Appendix S. July 1, 1991.)

5. U.S. Environmental Protection Agency. *Code of Federal Regulations*. Title 40, Chapter I, Subchapter C, Part 51. Appendix S.IV.A. July 1, 1991.

6. U.S. Congress. Clean Air Act, as amended November 1990. 42 U.S.C. 7401 et. seq. Section 173(3). Washington, D.C. U.S. Government Printing Office.

7. U.S. Congress. Clean Air Act, as amended November 1990. 42 U.S.C. 7401 et. seq. Section 173(a). Washington, D.C. U.S. Government Printing Office.

8. "The Clean Air Act Amendments of 1990 (1990 Amendments) make numerous changes to the NSR requirements of the prevention of significant deterioration (PSD) and nonattainment area programs. The 1990 Amendments create new and expanded nonattainment areas, extend PSD coverage to current Class I area boundaries, and mandate a PSD exemption for certain hazardous air pollutants. The Environmental Protection Agency (EPA) intends to propose by September of this year a regulatory package that will implement these and other changes to the NSR provisions. Final adoption of these revised regulations is projected for August 1992. In the interim period between passage of the 1990 Amendments and adoption of the Agency's final regulations EPA expects that numerous issues regarding the 1990 Amendments will arise." Memorandum from Seitz, John S., Director, OAQPS, U.S. EPA, Research Triangle Park, NC, to Addressees. New Source Review (NSR) Program Transitional Guidance. March 11, 1991.

9. "This guidance document does not supersede existing State regulations or approved State implementation plans. However, in some cases, it calls upon States to implement their NSR programs in a manner consistent with provisions of the 1990 Amendments that are applicable immediately and with the requirements that flow directly from these provisions." Memorandum from Seitz, John S., Director, OAQPS,

U.S. EPA, Research Triangle Park, NC, to Addressees. New Source Review (NSR) Program Transitional Guidance. March 11, 1991.

10. "Nonetheless, the policies set out in the transition memorandum are intended solely as guidance and do not represent final Agency action. They are not ripe for judicial review for this reason. Moreover, they are not intended, nor can they be relied upon, to create any rights enforceable by any party in litigation with the United States. The EPA officials may decide to follow the guidance provided in this memorandum, or to act at variance with the guidance, based on an analysis of specific circumstances. The Agency also may change this guidance at any time without public notice." Memorandum from John S., Director, OAQPS, U.S. EPA, Research Triangle Park, NC, to addressees. New Source Review (NSR) Program Transitional Guidance. March 11, 1991.

11. "In many States, the existing approved Part D permit program by its terms covers all designated nonattainment areas in the State, so Part D permit program will automatically apply to the new and expanded nonattainment areas which are established under provisions of Title I of the 1990 Amendments. Thus, until new rules are adopted for these new or expanded nonattainment areas, States should apply the requirements of their existing approved Part D permit program. However, in other States Part D program may be limited to specified areas and does not apply to new or expanded areas. In these cases, States must implement a transitional permitting program until their existing Part D programs are revised to meet the requirements of the 1990 Amendments and expanded to cover all nonattainment areas in the State. Otherwise, both the goals of part D and Congress' intent in creating new or expanded nonattainment areas will be frustrated." Memorandum from Seitz, John S., Director, OAQPS, U.S. EPA, Research Triangle Park, NC, to addressees. New Source Review (NSR) Program Transitional Guidance. March 11, 1991.

12. "Pursuant to section 110(n)(3), an existing construction ban that was imposed due to the absence of approved Part D NSR rules remains in effect until a revised NSR SIP is approved. Existing construction bans imposed due to disapproval of primary sulfur dioxide NAAQS attainment plans also remain in effect. A Federal Register notice will be published soon announcing the status of construction bans in general and also lifting specific bans where appropriate. Should a construction ban be lifted in any area designated as nonattainment, and the area lacks an approved Part D NSR rule, the State should meet the requirements of 40 CFR part 51, appendix S, in issuing permits to major new sources or major modifications prior to the adoption of NSR rules meeting the requirements of the 1990 Amendments." Memorandum from Seitz, John S., Director, OAQPS, U.S. EPA, Research Triangle Park, NC, to addressees. New Source Review (NSR) Program Transitional Guidance. March 11, 1991.

13. "The NSR permitting program in an existing FIP remains in effect until a SIP is approved or a revised FIP is adopted." Memorandum from Seitz, John S., Director, OAQPS, U.S. EPA, Research Triangle Park, NC, to addressees. New Source Review (NSR) Program Transitional Guidance. March 11, 1991.

14. "Section 173(b) invalidates growth allowances in existing SIP's in areas that received a SIP call prior to enactment of the 1990 Amendments, or that received one thereafter. For NSR permits issued on or after November 15, 1990, previously-approved growth allowances cannot be used in these areas. Construction permits cannot be issued in SIP-call areas under existing EPA-approved Part D programs to the extent that such permits rely on previously-approved growth allowances. Case-by-case emission offsets must be obtained for any such permits, and other existing Part D requirements must be met." Memorandum from Seitz, John S., Director, OAQPS, U.S. EPA, Research Triangle Park, NC, to addressees. New Source Review (NSR) Program Transitional Guidance. March 11, 1991.

15. "To address some immediate concerns generated by the 1990 CAAA, the Environmental Protection Agency (EPA) issued an initial NSR transitional memorandum on March 11, 1991, entitled 'New Source Review Program Transitional Guidance.' This memorandum supplements that effort by clarifying EPA guidance regarding the permitting of new or modified sources in situations where a State does not submit a State implementation plan (SIP) revision implementing the augmented Part D NSR provisions of the 1990 CAAA by the applicable statutory deadline. The statutory deadlines for submission of revised NSR SIP's are listed in the attachment. Moreover, as more fully set forth in the March 11, 1991 transitional memorandum, this supplemental memorandum sets forth nonbinding guidance that does not create any rights or otherwise predetermine the outcome of any procedures. Also, many of EPA's interpretations of the new Part D NSR requirements are in the 'General Preamble for the Implementation of Title I of the Clean Air Act Amendments of 1990' (General Preamble) (see 57 FR 1398, 13552-556, April 16, 1992). These interpretations are not affected by this memorandum." Memorandum from Seitz, John S., Director, OAQPS, U.S. EPA, Research Triangle Park, NC, to Addressees. New Source Review (NSR) Program Supplemental Transitional Guidance on Applicability of New Part D NSR Permit Requirements. September 3, 1992.

16. "Where States do not submit the Part D NSR SIP by the applicable statutory deadline ... sources that have submitted complete permit applications ... by the submittal deadline may receive final permits under existing State NSR rules. In this situation, such sources will be considered by EPA to be in compliance with the Act without meeting the amended Part D NSR provisions of the 1990 CAAA, provided they meet the following conditions:

    1. The State and source move expeditiously towards final permit issuance.

    2. Construction begins no later than 18 months from the date of permit issuance unless an earlier time is required under the applicable SIP.

    3. Construction is not discontinued for a period of 18 months or more.

4. Construction is completed within a reasonable time. States may not grant permit extensions beyond these time periods unless the permittee is required in a federally-enforceable manner to meet the new Part D NSR provision."

Memorandum from Seitz, John S., Director, OAQPS, U.S. EPA, Research Triangle Park, NC, to Addressees. New Source Review (NSR) Program Supplemental Transitional Guidance on Applicability of New Part D NSR Permit Requirements. September 3, 1992.

17. "Also, under today's guidance, where States miss the statutory deadline for Part D NSR SIP submittal, for sources that have not submitted complete permit applications by the SIP submittal deadline, EPA will also consider the source to be in compliance with the Act where the source obtains from the State a permit that is consistent with the substantive new NSR Part D provisions in the 1990 CAAA. The substantive new provisions are the new applicability thresholds, the new offset ratios, the offset requirements of Section 173, and the NO_x requirements of section 182(f) for most O_3 nonattainment areas and the NOTR." Memorandum from Seitz, John S., Director, OAQPS, U.S. EPA, Research Triangle Park, NC, to Addressees. New Source Review (NSR) Program Supplemental Transitional Guidance on Applicability of New Part D NSR Permit Requirements. September 3, 1992.

18. "Please note that the Act allows States to implement the new Part D NSR provisions prior to the statutory deadlines and in a manner more stringent than EPA guidance or rules. Thus, today's guidance does not apply in any State to the extent that the State's own rules or transitional guidance is more stringent." Memorandum from Seitz, John S., Director, OAQPS, U.S. EPA, Research Triangle Park, NC, to Addressees. New Source Review (NSR) Program Supplemental Transitional Guidance on Applicability of New Part D NSR Permit Requirements. September 3, 1992.

10.3 PSD AREAS

10.3.1 Applicability

Major new stationary sources located within areas designated attainment or unclassifiable pursuant to section 107 of the Act are required to undergo preconstruction review in accordance with regulations for the prevention of significant deterioration.[1,2] Prevention of significant deterioration defines a new or existing major stationary source as one which has the potential to emit 250 tpy or more (or 100 tpy, if the source category is one of the 28 categories specifically listed in the PSD regulations) of any pollutant subject to regulation under the Act. Any new major stationary source that also has the potential to emit 15 tpy or more of PM-10 in an area designated attainment or unclassifiable for PM-10 (or 25 tpy of particulate matter emissions in an area designated attainment or unclassifiable for TSP) must undergo PSD review with respect to those emissions. Similarly, any existing major stationary source that proposes a physical or operational change that would increase emissions of PM-10 by 15 tpy or more (25 tpy or more for particulate matter emissions) is also subject to PSD review for the resulting net emissions increase.

10.3.2 Control Technology Requirements

Major sources subject to PSD review for PM-10 are required to control emissions of that pollutant to a degree that reflects the best available control technology (BACT).[3] A BACT analysis is completed on a case-by-case basis, and considers energy, environmental, and economic impacts in determining the maximum degree of reduction achievable for the proposed source or modification. In no event can the determination of BACT result in an emission limitation which would not meet any applicable standard of performance under 40 CFR Parts 60 and 61.

10.3.3 Air Quality Analysis

The applicant for a PSD permit is required to demonstrate via a modeling analysis that the proposed new emissions will not cause or constitute to a violation of any NAAQS and

PSD increments.[4,5] The NAAQS impose a ceiling on total ambient concentrations. Increments impose a limit on the maximum amount of increase in ambient concentrations relative to a baseline concentration. NAAQS for PM-10 and increments for TSP are expressed for annual and 24-hour periods.

A demonstration of compliance with the NAAQS is based on a modeling analysis in a manner that is consistent with the *Guideline on Air Quality Modeling (Revised)* (see Chapter 6 for more detail). To meet preconstruction monitoring requirements under the PSD program, monitoring data may need to be provided by the applicant. When monitoring data are required, guidance is available in the *Ambient Monitoring Guidelines for Prevention of Significant Deterioration (PSD)*[6] (see Chapter 5 for more detail).

The air quality analysis should also be used as a basis for establishing PM-10 emission limits if BACT-derived limits are not sufficient. In either case, the limits must be sufficient to protect the NAAQS and the PSD increments. Thus, PSD emission limits that reflect the air quality analysis will need to be specified based on annual and 24-hour averaging periods.[7]

10.3.4 Other Impacts

Pursuant to 40 CFR Part 51.166(o), the applicant must prepare additional impact analyses for each pollutant subject to regulation under the Act which will be emitted by the proposed new source or modification.[2,8] The analysis assesses the impacts of air, ground, and water pollution on soils, vegetation, and visibility caused by any increase in emissions of any regulated pollutant from the source or modification under review, and from associated growth.

Other impact analysis requirements may also be imposed on a permit applicant under local, State, or Federal laws which are outside the PSD permitting process. Receipt of a PSD permit does not relieve an applicant from the responsibility to comply fully with such requirements. For example, two Federal laws which may apply on occasions are the *Endangered Species Act* and the *National Historic Preservation Act.* Such legislation may require additional analyses (although not as part of the PSD permit) if any federally-listed rare or endangered species, or any sites that are included (or are eligible to be included) in the National Register of Historic Sites, are identified in the source's impact area. Secondary

emissions (*i.e.*, emissions not caused by the new source itself, but from associated growth) must be included in the impact analyses.

An analysis of visibility impairment is conducted using a three-level screening technique. The analysis method is described in the EPA document entitled, *Workbook for Estimating Visibility Impairment.*[9]

10.3.5 Class I Areas

The PSD program is designed to provide the greatest degree of protection to Class I areas. Mandatory Class I areas are those specified by the Act. They are protected by stringent Class I PSD increments and air quality-related values (AQRV's) that the Federal Land Manager (FLM) has an affirmative duty to protect. AQRV's are those attributes of a Class I area that are dependent on the maintenance of a high level of ambient air quality. These may include, among other things, acid deposition effects and visibility impairment in Class I areas. Sources located within 100 kilometers of a designated Class I area with an ambient impact greater than 1 microgram per cubic meter for a 24-hour average are required to notify the FLM, who may require the applicant to conduct a Class I area impact assessment. A Class I impact analysis must show that the source will not cause or contribute to a Class I increments violation. Otherwise, the applicant must demonstrate to the satisfaction of the FLM that no AQRV's are adversely affected. If no increment violations are shown to occur, then the FLM may call for denial of the PSD permit, if adverse impacts on any AQRV can be demonstrated.

Procedures for Class I review, including responsibilities for both the FLM and the reviewing agency, are contained in the EPA *New Source Review Workshop Manual (Draft, October 1990, Chapter E)* and in guidance documents produced by the National Parks Service, Forest Service, and Fish and Wildlife Service.

REFERENCES FOR SECTION 10.3

1. U.S. Environmental Protection Agency. *Code of Federal Regulations.* Title 40, Chapter I, Subchapter C, Part 51.166(b)(1)(i). July 1, 1991.

2. U.S. Environmental Protection Agency. *New Source Review Workshop Manual-Part I,* (Draft). Office of Air Quality Planning and Standards, Research Triangle Park, NC 27711. October 1990.

3. U.S. Congress. Clean Air Act, as amended November 1990. 42 U.S.C. 7401 et. seq. Section 165(a)(4). Washington, D.C. U.S. Government Printing Office. (See also U.S. Environmental Protection Agency. *Code of Federal Regulations.* Title 40, Chapter I, Subchapter C, Part 51.166(j)(2). July 1, 1991.)

4. U.S. Environmental Protection Agency. *New Source Review Workshop Manual,* (Draft). Office of Air Quality Planning and Standards, Research Triangle Park, NC 27711. October 1990. Chapter C.

5. U.S. Environmental Protection Agency. *Code of Federal Regulations.* Title 40, Chapter I, Subchapter C, Part 51.166(k). July 1, 1991.

6. U.S. Environmental Protection Agency. *Ambient Monitoring Guidelines for Prevention of Significant Deterioration (PSD).* Office of Air Quality Planning and Standards, Research Triangle Park, NC. EPA-450/4-87-007. May 1987.

7. "This is in response to your November 17, 1986 memorandum in which you requested comment on Region V's belief that PSD permits must contain short-term emission limits to ensure protection of the NAAQS and PSD increments. I concur with your position and emphasize that this position reflects our national policy." Memorandum from Emison, G., OAQPS, to D. Kee., Region V. November 24, 1986.

8. U.S. Environmental Protection Agency. *Code of Federal Regulations.* Title 40, Chapter I, Subchapter C, Part 51.166(o). July 1, 1991.

9. U.S. Environmental Protection Agency. *Workbook for Estimating Visibility Impairment.* Office of Air Quality Planning and Standards, Research Triangle Park, NC. EPA-450/4-87-031. November 1980.

10.4 SIP PERMIT REQUIREMENTS

In addition to the special major source permit requirements listed above, SIP permit requirements are specified in 40 CFR Part 51.165(b). These requirements govern the permitting of major new and modified sources in attainment and unclassifiable areas where NAAQS violations exist or are discovered as part of the permitting analysis. Essentially, what is required for PM-10 is that a source demonstrate that its ambient impact would be less than the PM-10 air quality significance levels in all areas and for all time periods where PM-10 NAAQS violations are or will occur.[1] It is not necessary to demonstrate an insignificant impact everywhere in the impact area.

The 40 CFR Part 165(b)(3) requirements also provide for sources that do cause or contribute to PM-10 violations (*i.e.*, cannot demonstrate insignificance at noncomplying receptors). In such situations, sources may devise PM-10 emission reductions to offset their ambient impacts. The particular ambient criteria that must be satisfied to conform to SIP provisions developed pursuant to 40 CFR Part 51.165(b) must be discussed with the reviewing agency and reflect local plans for maintenance and attainment of the PM-10 NAAQS.

REFERENCES FOR SECTION 10.4

1. "I believe the most appropriate course of action to follow is the second approach which considers the significant impact of the source in a way that is spatially and temporally consistent with the predicted violations." Memorandum from Emison, G.A., OAQPS, to T.S. Maslany, Air Management Division, Region III. July 5, 1988.

10.5 VISIBILITY

With respect to visibility protection, PSD permit reviews for new or modified major stationary sources must provide for the following:

- Written notification (including the visibility analysis) of FLMs of any affected Federal Class I areas within 30 days of receipt of and at least 60 days prior to public hearing or, in cases where the reviewing agency receives advance notification (*e.g.*, early consultation with the source prior to submission of the application), written notification shall be provided to the affected FLM(s) within 30 days of such advance notification

- Consideration of any analysis performed by the FLM that is provided within 30 days of written notification as specified above and concludes that the proposed new major stationary source or major modification may have an adverse impact on visibility in any Federal Class I area. Where the reviewing agency finds that such an analysis does not demonstrate to the satisfaction of the State that an adverse impact will result in the Federal Class I area, the State must, in the notice of public hearing, either explain its decision or give notice as to where the explanation can be obtained

New source review with respect to visibility protection must provide for review of any new major stationary source or major modification that:

- Has an impact on any integral vista of a Federal Class I area, if the vista is identified in accordance with 40 CFR Part 51.304 by the FLM at least 12 months before submission of a complete permit application (or within 6 months if the FLM has provided notice and opportunity for public comment)

- Proposes to locate in an area classified as nonattainment under section 107(d)(1)(A)(B)(C) of the Act but which may have an impact on visibility in any Federal Class I area

States may also require monitoring of visibility in any Federal Class I area near the proposed new stationary source or major modification. All new source reviews with respect to visibility shall be performed in accordance with 40 CFR Part 51.320 and 40 CFR Part 52.24 and must ensure that the source's emissions will be consistent with making reasonable progress toward the national visibility goal referred to in 40 CFR Part 51.300(a).

10.6 EMISSIONS TRADING

10.6.1 General Policy Aspects

Emissions trading consists of bubbles, netting, offsets, and emission reduction banking. These trading alternatives do not alter existing air quality requirements (*e.g.*, this policy and guidance does not affect the applicable NSR/PSD rules for offsetting and netting). Still, these trading alternatives provide flexibility to States and industry in meeting their requirements. Emission trading can result in reduced costs and faster compliance with applicable regulations. Any use of bubbles, banking, or similar emissions trading provisions must be approved by the EPA as a SIP revision or must be approved by the State under an EPA approved generic bubble rule. A summary of emissions trading alternatives follows.[1]

10.6.2 Bubbling

EPA's bubble policy lets existing plants (or groups of plants) increase emissions at one or more emission sources in exchange for compensating extra decreases in emissions at other emission sources. To be approvable, each bubble must produce results which are equivalent to or better than the baseline emission levels in terms of ambient impact and enforceability. Thus, bubbles should jeopardize neither ambient standards nor applicable PSD increments and visibility requirements. Under EPA's bubble policy, emissions reductions from existing sources can not be used to meet technology-based requirements applicable to new or modified stationary sources.[2]

10.6.3 Netting

Netting refers to the policy by which EPA may exempt "modifications" of existing major sources from certain preconstruction permit requirements under the New Source Review (NSR) program, so long as there is no net emissions increase within the major source or any such increase falls below significance levels. By "netting out," the modification is not considered "major" and is therefore not subject to associated preconstruction permit requirements for major modifications under 40 CFR 51.18, 52.21, 52.24, 52.27, or 52.28.

The modification must nevertheless meet applicable NSPS, NESHAPs, preconstruction applicability review requirements under 40 CFR 51.18(a)-(h) and (l), and SIP requirements.[3] However, in addition to these Federal definitions for major new sources and modifications, State preconstruction permits for major or minor new sources and modifications may be required under 40 CFR 51.18(a), and some States preclude netting.

10.6.4 Offsets

In nonattainment areas, major new stationary sources and major modifications are subject to a preconstruction permit requirement that they obtain enough emission reductions to more than "offset" their emissions. This requirement is designed to allow industrial growth in nonattainment areas without interfering with attainment and maintenance of the NAAQS.[4]

10.6.5 Banking

Firms may store or bank qualified emission reduction credits (ERC's) in EPA-approvable banks for later use in bubble, offset or netting transactions. Depending on the bank's rules, banked ERC's may also be sold or transferred to other firms which seek to meet certain regulatory requirements by use of emissions trades.[5]

10.6.6 Emission Reduction Credits

Emission reduction credits are the common currency of all trading activity. To ensure that emission trades do not contravene relevant requirements of the Act, only reductions which are surplus, enforceable, permanent, and quantifiable can qualify as emission reduction credits and be banked or used in an emissions trade.

REFERENCES FOR SECTION 10.6

1. 51 Federal Register 43,824-25 (December 4, 1986), Emissions Trading Policy Statement; General Principles for Creation, Banking and Use of Emission Reduction Credits; Final Policy Statements and Accompanying Technical Issues Document.

2. 51 Federal Register 43,830 (December 4, 1986), Emissions Trading Policy Statement; Introduction: Basic Elements of Emissions Trading; The Bubble.

3. 51 Federal Register 43,830 (December 4, 1986), Emissions Trading Policy Statement; Introduction: Basic Elements of Emissions Trading; Netting.

4. 51 Federal Register 43,830-31, (December 4, 1986), Emissions Trading Policy Statement; Introduction: Basic Elements of Emissions Trading; Emission Offsets.

5. 51 Federal Register 43,831 (December 4, 1986), Emission Trading Policy Statement; Introduction: Basic Elements of Emissions Trading; Emission Reduction Banking.

10.7 PM-10 SPECIFIC POLICY ASPECTS

Generally, an emissions trading applicant must demonstrate that the proposed trades will not cause an increase in baseline emissions. The baseline emission depends upon the type of area in which the source operates. Usually, an air quality demonstration for PM-10 using ambient dispersion modeling is required.[1]

The emissions trading policy offers four alternatives States can follow to evaluate whether any bubble or offset is approvable:

1. *De Minimis.* In general, no modeling is needed to determine the ambient equivalence to trades in which applicable net baseline emissions do not increase and in which the gross sum of the emissions increases, after applicable control requirements, total less than 25 tpy for particulate matter.[2]

2. Level I. In general, no modeling is needed to determine ambient equivalence if:

   a. The trade does not result in an increase in applicable net baseline emissions

   b. The relevant sources are located in the same vicinity (within 250 meters of each other)

   c. No increase in baseline emissions occurs in the source with the lower effective plume height as determined under EPA's *Guidelines on Air Quality Models*

   d. No complex terrain is within the area of significant impact of the trade or 50 kilometers, whichever is less

   e. Stacks with increasing baseline emissions are tall enough to avoid possible downwash situations, as determined by the formula at 50 Federal Register 27,892 (July 8, 1985)

   f. The trade does not involve open dust sources

3. Level II. Bubble trades which are neither *de minimis* nor Level I may nevertheless be evaluated for approval based on modeling to determine ambient equivalence limited solely to the impacts of the specific emission sources involved in the trade, if: (1)

there is no increase in applicable net baseline emissions; (2) the potential change in emissions before and after the trade will not cause a significant increase in pollutant concentrations at any receptor for any averaging time specified in an applicable ambient air quality standard; and (3) such an analysis does not predict any increase in ambient concentrations in a mandatory Federal Class I area. The definition of "significant" as used above can be found in the Emission Trading Policy Federal Register Notice, 51 FR 43845 (December 4, 1986), footnote 38.

4. Level III. Full dispersion modeling considering all sources affecting the trade's area of impact is required to determine ambient equivalence if applicable net baseline emissions will increase as a result of the trade, or if the trade cannot meet criteria for approval under *de minimis*, Level I or Level II.[3]

See Section 7.9 of this guideline for discussion on stack height emissions balancing policy.

REFERENCES FOR SECTION 10.7

1. "Bubble applicants must show that their proposed trades are at least equivalent in ambient effect to the SIP emission limits the bubble would replace. For some criteria pollutants (*e.g.*, VOC or NOx) this test may generally be met by showing equal reduction in emissions. For other pollutants (*e.g.*, SO2, TSP, or CO) it was traditionally met, prior to the 1982 policy, through ambient dispersion modeling." 51 Federal Register 43,827 (December 4, 1986), Emissions Trading Policy Statement; General Principles for Creation, Banking and Use of Emission Reduction Credits; Final Policy Statements and Accompanying Technical Issues Document.

2. 51 Federal Register 43,828 (December 4, 1986), Emissions Trading Policy Statement; General Principles for Creation, Banking and Use of Emission Reduction Credits; Final Policy Statements and Accompanying Technical Issues Document.

3. 51 Federal Register 43,844-5, (December 4, 1986), Emissions Trading Policy Statement; General Principles for Creation, Banking and Use of Emission Reduction Credits; Final Policy Statements and Accompanying Technical Issues Document.

11.0 COMPLIANCE AND ENFORCEMENT

11.1 GENERAL

Implementation and enforcement provisions must be included in a SIP to show how the requirements of the plan will be put into effect and how sources that are in violation of the plan's requirements will be brought into compliance. Therefore, the emission limits and other requirements must (1) be written so that they are enforceable; (2) must require continuous compliance with the SIP provisions and with the NAAQS; (3) must include provisions for monitoring, testing, and recordkeeping and reporting to determine compliance; and (4) must include specific, expeditious final compliance data.[1]

11.2 ENFORCEABILITY CRITERIA

To be enforceable, the wording of SIP regulations must unambiguously describe what facilities are affected by the rule and what they are required to do to be in compliance. The requirements should be within the statutory authority of the regulatory agency and, in all cases, the owner or operator of a source should be aware of the standard of conduct required by the regulation.[2] A SIP regulation should address the following issues related to enforceability.[3]

Applicability

- What sources are being regulated?
- What are the criteria for exemption?
- Is the calculation procedure for exemption clearly specified?
- Is the emission inventory listed in the background document of the attainment demonstration?
- Is the averaging time(s) used in the rule different from that of the ambient standard?
- What are the units of compliance?

- Is bubbling or averaging of any type allowed? If yes, state criteria. Could a U.S. EPA inspector independently determine if the criteria were met? Does EPA have to approve each case?

- If there is a redesignation, will this change the emission limitations? If yes, which ones and how?

Compliance Dates

- What is the attainment date?

- What is the date by which compliance is expected (or the date on which noncompliance will be considered a violation of the rule)

Specificity of Conduct

- What test method is required to determine compliance?

- What is the averaging time in compliance test method?

- Is a compliance calculation or evaluation required? If yes, list the formula, period of compliance, and/or evaluation method.

Incorporation by Reference

- What is State authority for rulemaking?

- Are methods/rules incorporated by reference in the right manner?

Record Keeping

- What records are required to determine compliance?

- In what form or units must the record be kept? On what time basis?

- Does the rule affirmatively require that the records be kept?

Exemption

- What are the allowable exemptions?

- Is the criteria for application clear?

Malfunction Provisions

- What exceedance may be excused?

- How is the standard to be applied?
- Who includes the determinations?

Any exemptions to the regulation should be clearly stated in the text of the regulation. For example, exemptions based on the size of the facility or on the emission levels from a source should state explicitly how the owner or operator of the source is to determine size and emission level (*e.g.*, whether emissions are actual or design emissions and how actual emissions are calculated). In addition, provisions of a regulation that allow for variations in the normal mode of compliance should be clearly specified. These variance provisions should also make clear whether case by case approval from EPA is required in order to qualify for the variance, or whether there is general approval.[4]

If the SIP regulation includes provisions of Federal regulations that are incorporated by reference, the wording of those Federal regulations should be examined to determine their appropriateness and relevance. To allow for future changes to the referenced Federal regulations, the SIP regulation could reference the current version of the Federal regulation or any subsequent version promulgated by EPA.

The SIP regulations should explicitly state recordkeeping and reporting requirements. They should describe the records that are to be kept to demonstrate compliance, how long and where the records are to be maintained, accessibility for inspection, and schedules and content requirements for any required reports. Whenever possible, the SIP should specify the form and format of reports or it should give an example of an acceptable report. The SIP regulations should be written so that failure to submit a required report is itself a violation of the regulations.

REFERENCES FOR SECTION 11.2

1. "Each plan must provide for monitoring the status of compliance with any rules and regulations that set forth any portion of the control strategy. Specifically the plan must meet the requirements of this subpart." U.S. Environmental Protection Agency. *Code of Federal Regulations*. Title 40, Chapter I, Subchapter K. July 1, 1991.

2. "The notion of enforceability encompasses several concepts. At the most basic level, a regulation must be within the statutory authority of the promulgating agency." Memorandum from Alushin, M.S., Associate Enforcement Counsel for Air Enforcement, *et. al.* to Regional Administrators. Regions I-X, *et. al.* Review of State Implementation Plans and Revisions for Enforceability and Legal Sufficiency. September 23, 1987. (PN 113-87-09-23-041)

3. "One critical function that your offices perform is to assure that regulations developed for stationary sources by the States under the Clean Air Act are enforceable and legally sufficient. Our regulations require that the state implementation plans ("SIP's") must "be adopted as rules and regulations enforceable (emphasis added) by the State agency" [40 CFR 51.281 (1987)]. We are concerned that review of SIP's for enforceability has not been receiving adequate attention. The Agency sometimes experiences difficulties in its efforts to enforce the current rules because they are not sufficiently clear. The Regional Offices are at the forefront of the Federal SIP approval process. The purpose of this memorandum is to remind you of the importance of doing the review necessary to assure that all SIP plans and revisions are enforceable and in conformance with the Act. Please do not forward for approval SIP's which fail to satisfy the enforceability criteria in this memorandum. Memorandum from Alushin, M.S., Associate Enforcement Counsel for Air Enforcement, *et. al.* to Regional Administrators. Regions I-X, *et. al.* Review of State Implementation Plans and Revisions for Enforceability and Legal Sufficiency. September 23, 1987. (PN 113-87-09-23-041)

4. "Your review should ensure that the rules in question are clearly worded and explicit in their applicability to the regulated sources." Memorandum from Potter, J.C., OAR, Adams, T.L., Jr., OECM, and Blake, F.S., General Counsel to Regional Administrators, Regions I - X, *et al.* September 23, 1987. (PN 113-87-09-23-041)

11.3 CONTINUOUS COMPLIANCE

11.3.1 General

As a general rule, sources are required to meet all applicable emission limitations and other control requirements incorporated into a SIP regulation at all times. Continuous compliance means that excess emissions should be avoided by proper design, operation, and maintenance of air pollution sources and air pollution control equipment.[1]

11.3.2 Enforcement Discretion Approach

The enforcement discretion approach allows the enforcing agency to determine whether emission limit violations are cases which do not require enforcement actions. In these situations, the source is responsible for proving that enforcement action would be inappropriate. An advantage to this approach is that by using enforcement discretion, an agency encourages sources to establish and follow proper operating and maintenance procedures. Proper procedures help to minimize periods of excess emissions.[2]

If a malfunction occurs such that bypassing pollution control equipment will prevent death, personal injury, or severe property damage, the pollution control agency can consider specific circumstances before choosing to take enforcement action. During such a malfunction or emergency situation, the owner or operator of the pollution source is expected to minimize and eliminate emission limit exceedances as quickly as possible. When an emission exceedance occurs in emergency situations, the source owner or operator is responsible for proving that the excess emissions resulted from a true malfunction (*i.e.*, unpreventable, unavoidable).[3]

Some SIP's provide for an automatic emission limitation exemption during periods of excess emission due to startup, shutdown, maintenance, or malfunction. "Excess emission" means an air emission rate which exceeds any applicable emission limitation. "Malfunction" means a sudden and unavoidable breakdown of process or control equipment. Generally, EPA agrees that imposing a penalty for sudden and unavoidable malfunctions caused by circumstances entirely beyond the control of the owner and/or operator is not appropriate.

However, any activity which can be foreseen and avoided, or planned, is not within the definition of a sudden and unavoidable breakdown. SIP provisions concerning malfunctions must be clearly defined. SIP's may, however, omit any special provisions for malfunctions.[4]

11.3.3 Malfunctions and Unusual Start-up or Shut-down

Any activity or event which can be foreseen and avoided falls outside of the definition of sudden and unavoidable breakdown of equipment. For example, a sudden breakdown which could have been avoided by better operation and maintenance practice is not a malfunction. In such cases, the control agency must enforce violations of the emission limitation. A SIP cannot provide an automatic exemption where a malfunction is claimed by a source.[5]

Startup and shutdown of process equipment are part of the normal operation of a source and should be accounted for in the planning, design, and implementation of operating procedures for the process and control equipment. Therefore, it is reasonable to expect that careful and prudent planning and design will eliminate violations of emission limitations during startup and shutdown. However, for a few sources there may exist infrequent short periods of excess emissions during startup and shutdown which cannot be avoided. Excess emissions during these infrequent short periods do not have to be treated as violations providing that the source adequately shows that the excess could not have been prevented through careful planning and design and that bypassing of control equipment was unavoidable to prevent loss of life, personal injury, or severe property damage.

Scheduled maintenance is a predictable event which can be scheduled at the discretion of the operator and therefore, be made to coincide with maintenance on production equipment or other source shutdowns. Therefore, excess emissions during periods of scheduled maintenance should be treated as a violation unless a source can demonstrate that such emissions could not have been avoided through better scheduling for maintenance or through better operation and maintenance practices.

REFERENCES FOR SECTION 11.3

1. "In the strict legal sense, sources are required to meet, without interruption, all applicable emission limitations and control requirements, unless such limitations specifically provide otherwise." Memorandum from Bennett, K.M., OANR, to Directors, Air and Waste Management Divisions and Air Management Divisions, Regions I - X. Definition of "Continuous Compliance and Enforcement of O&M Violations." June 21, 1982.

2. "EPA can approve SIP revisions which incorporate the enforcement discretion approach." Memorandum from Bennett, K.M., OANR, to Regional Administrators, Regions I - X. Policy on Excess Emissions During Startup, Shutdown, Maintenance, and Malfunctions. September 28, 1982. (PN 113-83-02-15-017).

3. "Therefore, during this latter situation, if effluent gases are bypassed which cause an emission limitation to be exceeded, this excess need not be treated as a violation if the source can show that the excesses could not have been prevented through careful and prudent planning and design and that bypassing was unavoidable to prevent loss of life, personal injury, or severe property damage." Memorandum from Bennett, K.M., OANR, to Regional Administrators, Regions I - X. Policy on Excess Emissions During Startup, Shutdown, Maintenance, and Malfunctions. February 15, 1983. (PN 113-83-02-15-017)

4. "Several of the existing State implementation plans (SIP's) provide for an automatic emission limitation exemption during periods of excess emissions due to startup, shutdown, maintenance or malfunction." Memorandum from Bennett, K.M., OANR, to Regional Administrators, Regions I - X. Policy on Excess Emissions During Startup, Shutdown, Maintenance, and Malfunctions. September 28, 1982. (PN 113-83-02-15-017).

5. "If a SIP contains a malfunction provision, it cannot be the type that provides for automatic exemption where a malfunction is alleged by a source." Memorandum from Bennett, K.M., OANR, to Regional Administrators, Regions I - X. Policy on Excess Emissions During Startup, Shutdown, Maintenance, and Malfunctions. September 28, 1982. (PN 113-83-02-15-017).

11.4 COMPLIANCE MONITORING

11.4.1 Compliance Monitoring Strategy

The Compliance Monitoring Strategy (CMS) provides a flexible approach for determining State inspection commitments. The CMS stresses flexibility with accountability. This strategy recommends the development of a comprehensive inspection plan that identifies all the sources in a source category committed to be inspected by the State agency during the fiscal year. The objectives of the CMS are as follows:

- To identify monitoring objectives vis-a-vis available resources through the development of an inspection plan
- To ensure effective national oversight of the air compliance monitoring program, to permit its evaluation, and to establish a feedback mechanism
- To ensure emission standards are met through effective compliance monitoring activities[1]

11.4.2 Compliance Monitoring Requirements

The EPA regulations require SIP's to contain legally enforceable procedures to require stationary sources to install and operate equipment for continuously monitoring, recording and reporting emissions [40 CFR 51.214(a)].[2] The SIP should identify the types of sources (by source category and capacity) that must install, maintain, and operate the equipment; the planned use of data; calculations, recordkeeping, reporting, and quality assurance procedures; and the pollutants that must be monitored [40 CFR 51.214(b)].[3]

Industries and control agencies benefit from routinely monitoring emissions, keeping records and periodic reporting. The benefits include increased cost-effectiveness by increasing the sources' energy efficiency and through pollution prevention and better targeting of "problem sources".[4] Continuous emission monitoring systems (CEMS) provide the best means for directly determining source compliance with emission regulations. In some situations, CEMS technology might not be feasible, in which case alternative methods of compliance might be necessary. These alternative technologies might include instrumental monitoring of process parameters, such as, temperature, pressure, and voltage. Where

instrumental or manual continuous emission monitoring is not feasible, manual monitoring of process information such as pressure drop reading would be acceptable. Currently, there are no CEMS available for PM-10.[5]

Wherever feasible, CEMS should be the required method for monitoring emissions from a source. This is particularly true for major sources and for sources located in nonattainment areas. CEMS should be used to monitor the continuous compliance of NSPS and PSD sources in attainment areas. Wherever it is technically feasible, CEMS requirements should also be incorporated into NSR preconstruction reviews, operating permits, and resolution of enforcement actions.[6] EPA also intends to require the use of CEMS at all major sources required to have permits under Title V and those subject to NESHAPS regulations.[7]

EPA regulations require SIP revisions to require source-continuous monitoring to determine compliance for some types of sources [40 CFR Part 51, Appendix P]. These sources include power plants, sulfuric acid plants, and FBC catalytic cracking unit regenerators at petroleum refineries that exceed size thresholds. If a State does not have plants that meet these qualifications, these provisions need not be included in the SIP. The State, however, should submit a certification with the SIP that there are no plants meeting these specifications. Many States require CEMS on major sources, such as pulp and paper plants and smelters.

The primary purposes of requiring such monitoring are to assure that the source (1) has timely and accurate compliance data; (2) has a quantitative basis to monitor emissions changes which are caused by process or control equipment changes (*e.g.*, so the source is able to modify maintenance procedures); and (3) can minimize energy and raw product use rates by using information made available by the CEMS. Such monitoring measurably helps agencies ensure continuous compliance and allows them to target resources for the sources which violate their emission limits.[6]

11.4.3 State Inspection Plan Submittal

Each inspection plan submittal will present how that State will address national priorities and will justify exceptions to the national priorities. The plan will also identify

specific sources to be inspected, allocate the total inspection budget among source groups, and cover other issues that are necessary to meet the CMS objectives and requirements.

The targeting model should be used to determine Group I and Group II sources to be included in this inspection plan, in addition to, their priority of inspection.[1]

The above steps will allow the State agency to develop their initial comprehensive inspection plan which will be submitted to the EPA Region for review. To justify exceptions to national priorities, the State must submit the basis for their decisions, such as the inspection targeting model inputs and results.[8]

11.4.4 Negotiated Inspection Plans

State agencies are responsible for providing information and for running the inspection targeting model where applicable. State agencies are also responsible for meeting the commitments of their negotiated inspection plans. Finally, the State agencies are responsible for ensuring the appropriate data are reported in a timely and complete fashion to the Regional Office or directly into AIRS.[9]

When preparing an inspection plan submittal, it is recommended that the State use the inspection targeting model for ranking Group I sources and those Group II sources that may be substituted for Group I source inspections on a State-wide level. The inputs and results are then presented at the inspection plan negotiation meeting with EPA.[6]

REFERENCES FOR SECTION 11.4

1. Memorandum. John Rasnic, Acting Director, Stationary Source Compliance Division, OAQPS, U.S. EPA, Washington, D.C., to Air Management Division Directors, Regions I, III, and IX; Air and Waste Management Division Director, Region II; Air, Pesticides, and Toxics Management Division Directors, Regions IV and VI; Air and Toxics Division Directors, Region VII, VIII, X; and Air and Radiation Division Director, Region V. *Revised Compliance Monitoring Strategy.* March 29, 1991.

2. "The plan must contain legally enforceable procedures to - (1) Require stationary sources subject to emission standards as part of an applicable plan to install, calibrate, maintain, and operate equipment for continuously monitoring and recording emissions." U.S. Environmental Protection Agency, *Code of Federal Regulations.* Title 40. Chapter I, Subchapter C, Part 51.214(a). July 1, 1991.

3. "The procedures must - (1) Identify the types of sources, by source category and capacity, that must install the equipment; and (2) Identify for each source category the pollutants which must be monitored." U.S. Environmental Protection Agency, *Code of Federal Regulations.* Title 40. Chapter I, Subchapter C, Part 51.214(b). July 1, 1991.

4. "EPA recognizes the value of routinely monitoring emissions, keeping records, and requiring periodic reporting from major stationary sources. EPA believes such monitoring is of great benefit both to industry in pollution prevention and energy minimization and to control agencies in continuous compliance and targeting of "problem sources." Letter from William K. Reilly, U.S. EPA, OAQPS, Washington, D.C., to John D. Dingell, Chairman, Subcommittee on Oversight and Investigations, Committee on Energy and Commerce, House of Representatives, Washington, D.C. April 10, 1991.

5. "While EPA considers continuous emission monitoring systems (CEMS) to be the most useful means of directly determining source compliance with emission regulations, the agency also recognizes the need to rely on the application of other means of continuous monitoring. These include instrumental monitoring of process parameters such as temperature, pressure, and voltage, and manual monitoring of process information such as the number of gallons and chemical analysis of specific paints used to coat automobiles. These alternative continuous monitoring techniques are appropriate in situations where the technology does not exist for CEMS or the application of technology is not feasible. Letter from William K. Reilly, U.S. EPA, OAQPS, Washington, D.C., to John D. Dingell, Chairman, Subcommittee on Oversight and Investigations, Committee on Energy and Commerce, House of Representatives, Washington, D.C. April 10, 1991.

6. "This states the OAQPS policy, which is effective immediately, on the use of CEM data and provides guidance as to how that policy should be implemented." Memorandum from Emison, G.A., OAQPS, to Air Management Division Director, Regions I, III, and IX, Air and Waste Management Division Director, Region II, Air, Pesticides and Toxics Management Division Director, Regions VII, VIII, and X, Air and Radiation Division Director, Region V. March 31, 1988. (PN 113-88-03-31-048)

7. "EPA intends to require the use of continuous monitoring at all "major" sources required to have permits under Title V and those subject to new or revised NSPS and NESHAPS regulations, including those defined by the Clean Air Act Amendments of 1990." Letter from William K. Reilly, U.S. EPA, OAQPS, Washington, D.C., to John D. Dingell, Chairman, Subcommittee on Oversight and Investigations, Committee on Energy and Commerce, House of Representatives, Washington, D.C. April 10, 1991.

8. Memorandum. John S. Seitz, Director, Stationary Source Compliance Division, OAQPS, U.S. EPA, Washington, D.C., to Air Management Division Directors, Regions I, III, and IX; Air and Waste Management Division Director, Region II; Air, Pesticides, and Toxics Management Division Directors, Regions IV and VI; Air and Toxics Division Directors, Region VII, VIII, X; and Air and Radiation Division Director, Region V. *Compliance Monitoring Strategy for FY 89.* March 31, 1988. (PN 114-88-31-006). Inspections, Monitoring, and Entry.

9. "The tracking system for CMS stationary sources in Group I is the AIRS/AFS system. As Group II sources are substituted for Group I sources, they are to be entered and subsequently tracked in AIRS/AFS as well... In addition, States are responsible for meeting the negotiated commitments, providing the necessary information to the Regional Office to both negotiate the reference level and enable the Regional Office to conduct the evaluation at the end of the year, reporting inspections in a timely manner to the Regional Office, or directly into AFS, and keeping Regional Office staff informed of problems as well as successes in the implementation of CMS." Memorandum from John Rasnic, Acting Director, Stationary Source Compliance Division, OAQPS, U.S. EPA, Washington, D.C., to Air Management Division Directors, Regions I, III, and IX; Air and Waste Management Division Director, Region II; Air, Pesticides, and Toxics Management Division Directors, Regions IV and VI; Air and Toxics Division Directors, Region VII, VIII, X; and Air and Radiation Division Director, Region V. *Revised Compliance Monitoring Strategy.* March 29, 1991.

11.5 COMPLIANCE PLANS/SCHEDULES

The EPA regulations require each SIP to contain legally enforceable compliance schedules that set forth the dates by which all stationary and mobile sources or categories must be in compliance with the SIP [40 CFR 51.260(a)]. Compliance plans/schedules should include enforceable milestones, stipulated penalties, final compliance dates, and compliance test method. The compliance schedules contained in the SIP must provide for attainment of compliance with the primary standards as soon as practicable, or no later than a specified date [40 CFR 51.26 1(a)].

11.6 COMPLIANCE TESTING METHODS

In accordance with the requirements of Subpart K of Title 40, Chapter I, Part 51 of the *Code of Federal Regulations*, each SIP must provide for monitoring the status of compliance with any rules and regulations that set forth any portion of the control strategy, specifically for testing and enforcement. The plan must provide for periodic testing and inspection of stationary sources and enforceable test methods for each emission limit specified in the plan.[1]

Appendix M of Title 40, Chapter I, Part 51 of the *Code of Federal Regulations* recommends two test methods, Method 201 and 201A, for the determination of PM-10 emissions in the preparation of State implementation plans.[2] Method 201 is based on an exhaust gas recycle procedure, and applies to the in-stack measurement of particulate matter of a size less than or equal to that of PM-10 emitted from stationary sources. In this method, a gas sample is isokinetically extracted from the source. An in-stack cyclone is used to separate particulate matter larger than PM-10, and an in-stack glass fiber filter is used to collect the PM-10. To maintain isokinetic flow rate conditions at the tip of the probe and a constant flow rate through the cyclone, a clean, dried portion of the sample gas at stack temperature is recycled into the nozzle. The particulate mass is determined gravimetrically after removal of uncombined water.

Method 201A, based on a constant sampling rate procedure, applies to the in-stack measurement of particulate matter of a size less than or equal to that of PM-10 emitted from stationary sources.[2] In this method, a gas sample is extracted at a constant flow rate through

an in-stack sizing device, which separates PM larger than PM-10. Variations from isokinetic sampling conditions are maintained within well-defined limits. The particulate mass is determined gravimetrically after removal of uncombined water.

Since condensible particulate matter (CPM) emissions form very fine particles in the PM-10 size range and are considered PM-10 emissions, EPA added (to Appendix M of Title 40, Chapter I, Part 51 of the *Code of Federal Regulations*[3]) a method 202, for measuring CPM emissions from stationary sources. The method may be used in conjunction with Method 201 or 201A if the probes are glass-lined. The CPM is collected in the impinger portion of a Method 17 (Appendix A, 40 CFR Part 60) type sampling train.[4] The impinger contents are immediately purged after the run with nitrogen to remove dissolved sulfur dioxide gases from the impinger contents. The impinger solution is then extracted with methylene chloride. The organic and aqueous fractions are then taken to dryness and the residues weighed. The total of both fractions represents the CPM.

Method 5 is another method used for the determination of particulate emissions from stationary sources.[5] In this method, particulate matter is withdrawn isokinetically from the source and collected on a glass fiber filter maintained at temperatures approved by EPA. The particulate mass, which includes any material that condenses at or above the filtration temperature, is determined gravimetrically after removal from uncombined water.

REFERENCES FOR SECTION 11.6

1. "As an enforceable method, States may use: (1) Any of the appropriate methods in appendix M to this part, Recommended Test Methods for State Implementation Plans; or (2) An alternative method following review and approval of that method by the Administrator; or (3) Any appropriate method in Appendix A to 40 CFR part 60." U.S. Environmental Protection Agency, *Code of Federal Regulations*. Title 40. Chapter I, Subpart K, Part 51.212. July 1, 1991.

2. U.S. Environmental Protection Agency, *Code of Federal Regulations*. Title 40. Chapter I, Subchapter C, Part 51, Appendix M. July 1, 1991.

3. 56 Federal Register 65,433-9 (December 17, 1991), Preparation, Adoption, and Submittal of State Implementation Plans, Method for Measurement of Condensible Particulate Emissions from Stationary Sources.

4. U.S. Environmental Protection Agency, *Code of Federal Regulations*. Title 40, Chapter I, Subchapter C, Part 60, Appendix A. July 1, 1991.

5. U.S. Environmental Protection Agency, *Code of Federal Regulations*. Title 40, Chapter I, Subchapter C, Part 60, Appendix A. July 1, 1991.

12.0 NEW SOURCE PERFORMANCE STANDARDS

12.1 GENERAL

Under section 111 of the Act, EPA is required to develop emission regulations for a category of sources which ". . . causes, or contributes significantly to, air pollution which may reasonably be anticipated to endanger public health or welfare."[1] These regulations, referred to as new source performance standards (NSPS), are to reflect the degree of emission reduction achievable through technology that has been adequately demonstrated, taking into consideration the cost of the emission reductions and any air quality, health, environmental and energy impacts on meeting the standard.[2]

This chapter summarizes relevant NSPS provisions (including emission limits, compliance testing, and monitoring procedures) for several source categories that are significant emitters of PM-10. NSPS provisions are generally applicable to total particulate matter. At present, there are no NSPS provisions specific to PM-10. NSPS particulate source categories generally include steam generators, smelters, petroleum refineries, and new residential wood heaters. A complete list of NSPS sources of particulate matter is included in Table 12-1. Relevant NSPS provisions for selected particulate matter source categories are discussed in Section 12.2. Aspects of the provisions for modifications and reconstructions are clarified in Section 12.3.

TABLE 12-1. NSPS PARTICULATE MATTER SOURCE CATEGORIES

Part 60	Source Category
Subpart D:	Fossil-Fuel Fired Steam Generators
Subpart Da:	Electric Utility Steam Generating Units
Subpart Db:	Industrial-Commercial-Institutional Steam Generating Units
Subpart E:	Incinerators
Subpart F:	Portland Cement Plants
Subpart I:	Asphalt Concrete Plants
Subpart J:	Petroleum Refineries
Subpart L:	Secondary Lead Smelters
Subpart M:	Secondary Brass and Bronze Production Plants
Subpart N:	Basic Oxygen Process Furnaces (Primary Emissions)
Subpart Na:	Basic Oxygen Process Steelmaking Facilities (Secondary Emissions)
Subpart O:	Sewage Treatment Plants
Subpart P:	Primary Copper Smelters
Subpart Q:	Primary Zinc Smelters
Subpart R:	Primary Lead Smelters
Subpart Y:	Coal Preparation Plants
Subpart Z:	Ferroalloy Production Facilities
Subpart AA:	Steel Plants: Electric Arc Furnaces
Subpart AAa:	Steel Plants: Electric Arc Furnaces and Argon-Oxygen Decarburization Vessels
Subpart BB:	Kraft Pulp Mills
Subpart CC:	Glass Manufacturing Plants
Subpart DD:	Grain Elevators
Subpart HH:	Lime Manufacturing Plants
Subpart LL:	Metallic Mineral Processing Plants
Subpart NN:	Phosphate Rock Plants
Subpart PP:	Ammonium Sulfate Manufacture
Subpart UU:	Asphalt Processing and Asphalt Roofing Manufacture
Subpart AAA:	New Residential Wood Heaters
Subpart OOO:	Nonmetallic Mineral Processing Plants
Subpart PPP:	Wool Fiberglass Insulation Manufacturing Plants

REFERENCES FOR SECTION 12.1

1. U.S. Congress. Clean Air Act, as amended November 1990. 42 U.S.C 7401 *et seq.* Section 111(b)(1)(A). Washington, D.C. U.S. Government Printing Office.

2. U.S. Congress. Clean Air Act, as amended November 1990. 42 U.S.C. 7401 *et seq.* Section 111(a). Washington, D.C. U.S. Government Printing Office.

12.2 NSPS PROVISIONS FOR PARTICULATE MATTER

12.2.1 Subpart D--Fossil-Fuel Fired Steam Generators[1]

This subpart applies to fossil-fuel fired steam generating units that commenced construction after August 17, 1971, and that have a heat input capacity greater than 250 MM Btu/hr. A fossil-fuel fired steam generating unit is defined as a furnace or boiler used in the process of burning fossil fuel for the purpose of producing steam by heat transfer. For this source category, particulate matter emissions are limited to 43 nanograms per joule (ng/J) (0.10 lb/MM Btu) heat input derived from fossil fuel or fossil fuel and wood residue and 20 percent opacity (except for one six-minute period per hour of not more than 27 percent opacity). Compliance is generally determined by Method 5 to determine the PM concentration at affected facilities without wet flue-gas-desulfurization (FGD) systems and Method 5B at affected facilities after FGD systems; the sampling time and sample volume for each run shall be at least 60 minutes and 0.85 dscm (30 dscf). Method 9 shall be used to determine opacity.

12.2.2 Subpart Da--Electric Utility Steam Generating Units[2]

This subpart applies to electric utility steam generating units that commenced construction after September 18, 1978, and that have a design heat capacity greater than 250 MM Btu/hr. An electric utility steam generating unit is defined as a steam electric generating unit that supplies more than one-third of its potential electric output and more than 25 MW electrical output to any utility power distribution system for sale. For this source category, particulate matter emissions are limited to 13 ng/J (0.03 lb/MM Btu) heat input derived from the combustion of solid, liquid, or gaseous fuel; 1 percent of the potential combustion concentration when combusting solid fuel; and 30 percent of potential combustion concentration when combusting liquid fuel. Opacity is limited to 20 percent. Compliance is generally determined by Method 5 to determine PM concentration at affected facilities without FGD systems and Method 5B at affected facilities after FGD systems; the sampling time and sample volume for each run shall be at least 120 minutes and 1.70 dscm (60 dscf). Method 9 shall be used to determine opacity.

12.2.3 Subpart Db--Industrial-Commercial-Institutional Steam Generating Units[3]

This subpart applies to industrial, commercial, and institutional steam generating units that commenced construction, modification, or reconstruction after June 19, 1984, and that have a heat input capacity greater than 100 MM Btu/hr. The steam generating unit in this category is defined as a device that combusts any fuel or by-product/waste to produce steam or to heat water or any other transfer medium. For this category, particulate matter emissions are limited to the following:

1. For affected facilities which combust coal or a mixture of coal and other fuels and have an annual operating capacity of ≤10 percent, PM emissions are limited to 22 ng/J (0.05 lb/MM Btu) heat input for affected facilities which combust coal or a mixture of coal and other fuels and have an annual operating capacity of ≥10 percent, PM emissions are limited to 43 ng/J (0.10 lb/MM Btu) heat input for affected facilities which combust coal or a mixture of coal and other fuels and have an annual operating capacity of ≤30 percent, PM emissions are limited to 86 ng/J (0.20 lb/MM Btu) heat input

2. For affected facilities which combust oil, PM emissions are limited to 43 ng/J (0.10 lb/MM Btu) heat input

3. For affected facilities which combust wood or a mixture of wood and other fuels and have an annual operating capacity >30 percent, PM emissions are limited to 43 ng/J (0.10 lb/MM Btu) heat input; for affected facilities which combust wood or a mixture of wood and other fuels and have an annual operating capacity of ≤30 percent, PM emissions are limited to 86 ng/J (0.20 lb/MM Btu) heat input

4. For affected facilities which combust solid waste or a mixture of solid waste and other fuels and have an annual operating capacity of ≤10 percent, PM emissions are limited to 43 ng/J (0.10 lb/MM Btu) heat input; for affected facilities which combust solid waste or a mixture of solid waste and other fuels and have an annual operating capacity of ≤30 percent, PM emissions are limited to 86 ng/J (0.20 lb/MM Btu) heat input.

Compliance is determined by Method 5 to measure PM concentration at affected facilities without wet FGD systems and by Method 5B at affected facilities after wet FGD systems; Method 17 may be used at facilities with or without wet scrubber systems provided the stack gas temperature does not exceed 160^0 C (320^0 F). Method 9 shall be used to determine opacity.

12.2.4 Subpart J--Petroleum Refineries[4]

This subpart applies to petroleum refineries with fuel combustion devices that commenced construction after June 11, 1973, and with Claus sulfur recovery plants (>20 long tons/day capacity) that commenced construction after October 4, 1976. Particulate matter emissions are limited to 1.0 kg/1000 kg (1.0 lb/1000 lb) of coke burn-off in the catalyst regenerator (exception). Opacity is limited to 30 percent (except for one six-minute average opacity reading in any one hour period). Compliance is generally determined by Method 5B or 5F to determine PM emissions and associated moisture content from affected facilities without wet FGD systems; only Method 5B is to be used after wet FGD systems. Sampling time and sampling rate for each run shall be at least 60 minutes and 0.015 dscm/min (0.53 dscf/min) (except that shorter sampling times may be approved by the Administrator when process variables or other factors preclude sampling for at least 60 minutes).

12.2.5 Subpart L--Secondary Lead Smelters[5]

This subpart applies to pot furnaces with a charging capacity of more than 250 kg (550 lb), blast (cupola) furnaces, and reverberatory furnaces in secondary lead smelters that commenced construction or modification after June 11, 1973. A secondary lead smelter is defined as any facility producing lead from a landbearing scrap material by smelting to the metallic form. For blast and reverberatory furnaces, particulate matter emissions are limited to 50 mg/dscm (0.022 gr/dscm). Opacity is limited to 10 percent for pot furnaces and to 20 percent for blast and reverberatory furnaces. Compliance is determined using Method 5 to determine the PM concentration during representative periods of furnace operation, including charging and tapping; the sampling time and sample volume for each run shall be at least 60 minutes and 0.90 dscm (31.8 dscf). Method 9 shall be used to determine opacity.

12.2.6 Subpart P--Primary Copper Smelters[6]

This subpart applies to dryers, roasters, smelting furnaces, and copper converters in primary copper smelters that commenced construction or modification after October 16, 1974. A primary copper smelter is defined as any installation or any intermediate process engaged in the production of copper from copper sulfide ore concentrates through the use of

pyrometallurgical techniques. For this source category, particulate emissions are limited to 50 mg/dscm (0.022 gr/dscf). Visible emissions are limited to 20 percent opacity. Compliance is determined using Method 5 to determine PM concentration; sampling time and sampling volume for each run shall be at least 60 minutes and 0.85 dscm (30 dscf). Method 9 shall be used to determine opacity.

12.2.7 Subpart Q--Primary Zinc Smelters[7]

This subpart applies to roaster and sintering machines in primary zinc smelters that commenced construction or modification after October 16, 1974. A primary zinc smelter is defined as any installation engaged in the production, or any intermediate process in the production, of zinc or zinc oxide from zinc sulfide ore concentrates through the use of pyrometallurgical techniques. For this source category, particulate matter is limited to 50 mg/dscm (0.022 gr/dscf). Visible emissions are limited to 20 percent opacity. Compliance is determined using Method 5 to determine the particulate matter concentration; sampling time and sample volume for each run shall be at least 60 minutes and 0.85 dscm (30 dscf). Method 9 shall be used to determine opacity.

12.2.8 Subpart R--Primary Lead Smelters[8]

This subpart applies to sintering machine, sintering machine discharge end, blast furnace, dross reverberatory furnace, electric smelting furnace, and converters in primary lead smelters that commenced construction or modification after October 16, 1974. A primary lead smelter is defined as any installation or any intermediate process engaged in the production of lead from lead sulfide ore concentrates through the use of pyrometallurgical techniques. For this source category, particulate emissions are limited to 50 mg/dscm (0.022 gr/dscf). Visible emissions are limited to 20 percent opacity. Compliance is determined using Method 5 to determine PM concentration; the sampling time and sample volume for each run shall be at least 60 minutes and 0.85 dscm (30 dscf). Method 9 shall be used to determine opacity.

12.2.9 Subpart AAA--New Residential Wood Heaters

This subpart applies to wood heaters manufactured on or after July 1, 1988, or sold at retail on or after July 1, 1990. A wood heater is defined as an enclosed, woodburning appliance capable of and intended for space heating and domestic water heating that meets the following criteria: (1) an average air-to-fuel ratio in the combustion chamber less than 35:1; (2) a useable firebox volume of less than 20 cubic feet; (3) a minimum burn rate less than 5 kg/hr; and (4) a maximum weight of 800 kg. For affected facilities manufactured on or after July 1, 1988 or sold at retail on or after July 1, 1990, which are equipped with catalytic combustors, particulate matter emissions are limited to a weighted average of 5.5 g/hr; for affected facilities not equipped with catalytic combustors, emissions are limited to a weighted average of 8.5 g/hr. For wood heaters manufactured on or after July 1, 1990 or sold at retail on or after July 1, 1992, which are equipped with catalytic combustors, particulate matter emissions are limited to a weighted average of 4.1 g/hr. For affected facilities which are not equipped with catalytic combustors, particulate matter emissions are limited to 7.5 g/hr. Compliance is determined using Method 28 to establish the certification test conditions and the particulate matter weighted emission values.

REFERENCES FOR SECTION 12.2

1. U.S. Environmental Protection Agency. *Code of Federal Regulations*. Title 40, Chapter I, Subchapter C, Part 60. Subpart D. July 1, 1991.

2. U.S. Environmental Protection Agency. *Code of Federal Regulations*. Title 40, Chapter I, Subchapter C, Part 60. Subpart Da. July 1, 1991.

3. U.S. Environmental Protection Agency. *Code of Federal Regulations*. Title 40, Chapter I, Subchapter C, Part 60. Subpart Db. July 1, 1991.

4. U.S. Environmental Protection Agency. *Code of Federal Regulations*. Title 40, Chapter I, Subchapter C, Part 60. Subpart J. July 1, 1991.

5. U.S. Environmental Protection Agency. *Code of Federal Regulations*. Title 40, Chapter I, Subchapter C, Part 60. Subpart L. July 1, 1991.

6. U.S. Environmental Protection Agency. *Code of Federal Regulations*. Title 40, Chapter I, Subchapter C, Part 60. Subpart P. July 1, 1991.

7. U.S. Environmental Protection Agency. *Code of Federal Regulations*. Title 40, Chapter I, Subchapter C, Part 60. Subpart Q. July 1, 1991.

8. U.S. Environmental Protection Agency. *Code of Federal Regulations*. Title 40, Chapter I, Subchapter C, Part 60. Subpart R. July 1, 1991.

12.3 MODIFICATION/RECONSTRUCTION PROVISIONS

"Modification" refers to "any physical or operational change to an existing facility which results in an increase in the emission rate to the atmosphere of any pollutant to which a standard applies . . . " as described in the NSPS general provisions. Some of the possible changes that do not qualify as modifications include (1) routine maintenance, repair, and replacement; (2) increases in production rate not accompanied by capital expenditures; (3) increased capacity utilization; (4) fuel switching, provided that facility was originally designed to handle the new fuel; (5) addition of air pollution control and related equipment; and (6) the change in ownership of an existing facility.[1]

"Reconstruction" generally includes "the replacement of components of an existing facility to such an extent that (1) the fixed capital cost of the new components exceeds 50 percent of the fixed capital cost that would be required to construct a comparable entirely new facility, and (2) it is technologically and economically feasible to meet the applicable standards . . ." [2]

REFERENCES FOR SECTION 12.3

1. U.S. Environmental Protection Agency. *Code of Federal Regulations*. Title 40, Chapter I, Subchapter C, Part 60.14. July 1, 1991.

2. U.S. Environmental Protection Agency. *Code of Federal Regulations*. Title 40, Chapter I, Subchapter C, Part 60.15. July 1, 1991.

United States
Environmental Protection
Agency

Office of Air Quality
Planning and Standards
Research Triangle Park, NC 27711

EPA-452/R-93-008
April 1993

Air

EPA

PM-10 GUIDELINE DOCUMENT

Appendix

EPA-452/R-93-008

PM-10 GUIDELINE DOCUMENT

Appendices A and B

Agency
Chicago 12th Floor

U.S. Environmental Protection Agency
Office of Air and Radiation
Office of Air Quality Planning and Standards
Research Triangle Park, North Carolina 27711

April 1993

APPENDIX A

REFERENCED MATERIALS

User note: Except where noted, Appendix A includes copies of all the memoranda, Federal Register notices, and Q & A's cited in the reference sections of the guideline document arranged in chronological order (lengthier documents, such as guidance documents, guidelines, manuals, etc., are not included in Appendix A, but can be obtained from EPA or elsewhere).

ENVIRONMENTAL PROTECTION AGENCY

WASHINGTON, D.C. 20460

OFFICE OF THE GENERAL COUNSEL

Date: September 27, 1972

Reply to Attn of: Michael A. James, Attorney
Air Quality and Radiation Division

Subject: Attainment of National Standards in Open Air Parking Lots

To: Conrad Simon, Chief
Air Programs Branch
Region II

MEMORANDUM OF LAW

FACTS

Your memorandum of September 1, 1972 raises the issue of the air pollution impact of a proposed sports complex to be constructed in the Hackensack Meadowlands in New Jersey. You state that the analysis of available data indicates that the national one-hour standard for carbon monoxide may be exceeded in the parking lot of the complex each time it is used for a major event.

QUESTION

Is the atmosphere above an open-air parking lot which is part of a sports complex "ambient air" under the Clean Air Act and EPA regulations?

ANSWER

Yes. Under the definition of "ambient air" in EPA regulations, national ambient air quality standards would apply to that portion of the atmosphere since it is external to buildings and the general public has access to it.

DISCUSSION

1. EPA has prescribed the applicability of the national primary and secondary ambient air quality standards by defining the term "ambient air." Section 40 CFR 50.1(e) of EPA regulations defines "ambient air" to mean "that portion of the atmosphere, external to buildings, to which the general public has access." There is no question that the

air which is the subject of your inquiry is a portion of the atmosphere external to buildings. A somewhat more difficult question is who the general public is and whether it can be said to have access to this facility.

2. The dictionary defines "public" to mean "the people as a whole", and notes that the term may contemplate "a group of people distinguished by common interests or characteristics" (Webster's Third New International Dictionary (1966)). Since §50.1(e) attaches the modifier "general", it indicates that the broader definition was intended by the regulation. The term "access" is defined as meaning "permission, liberty, or ability to enter...." (Webster's Third New International Dictionary (1966)). While the parking lot in question may be fenced and/or guarded so as to prevent the entrance of the general public during all times except those immediately preceding, during, and immediately following athletic events, it is clear that the general public may readily enter the lot on foot or by vehicle during the period of highest pollution levels. The essential character of this complex is public, and it is difficult to imagine that the entrance of members of the community at large would be restricted on "game days", whether persons who seek entry do so to purchase tickets, watch crowds, or pick pockets. This situation may be contrasted with that of private property outdoors where only persons having some special relationship with the property owner, or his agents or lessees, are able to gain entrance to the property, while the general public's entrance is physically barred in some way.

3. Having concluded that the air above the parking lot is ambient air, we see no basis for excluding it from coverage by the State's implementation plan. There seems to be no logical difference between making the implementation plan applicable to the parking lot and making it apply to congested downtown areas where carbon monoxide concentrations due to heavy traffic are also a problem. As your memorandum suggests, even if the atmosphere above the parking lot were not "ambient air" it would be necessary for the State's implementation plan to consider the impact of emissions at the facility upon the atmosphere beyond the lot's fence line.

UNITED STATES ENVIRONMENTAL PROTECTION AGENCY
Office of Air Quality Planning and Standards
Research Triangle Park, North Carolina 27711

DATE JUN 12 1980

SUBJECT: Information Required in Federal Register Packages

FROM: Richard G. Rhoads, Director
Control Programs Development Division (MD-15)

TO: Director, Air and Hazardous Materials Division, Regions I-V, and VII

An April 29, 1980 memo from Walt Barber asked that all SIP revisions dealing with SO_2 relaxations be submitted through the "special action" procedures. The purpose of that request was to allow the Agency to more carefully scrutinize the nature of each relaxation and its multi-regional impact. A copy of this memo is attached.

In order to allow us to assess the relative impact of each SO_2 relaxation more accurately, I ask that the following information be included in each action memo.

1. Plant name and location.

2. Size of the facility (including the number of boilers) expressed in megawatts or Btu/hour firing capacity (design).

3. Amount, type, and sulfur content of actual fuel combusted during the previous year.

4. The revised SO_2 emission limit, the existing SIP limit, and the corresponding averaging times for these limits.

5. The "paper" as well as actual increase or decrease in emissions.

The calculations involved in determining the increase of emissions should assume status quo operating conditions of the source. There is no need to consider increased or decreased utilization of the source's capacity.

In addition, because of the ongoing development of policy on the issue of good engineering practice (GEP) stack height, all Federal Register packages addressing the stack height issue should be submitted through the "special action" procedures. Furthermore, I ask that your staff inform Bob Schell (629-5365) of my staff of any Federal Register packages involving stack height increases which are currently under development and projected to be forwarded for 14-day review within the next few weeks.

The following information should be included in each action memo which involves increased stack height.

1. Height of the old stack as well as that of the new.

2. If GEP stack height is determined, the methodology used to determine it, and the stack height considered to be GEP.

Your cooperation and assistance in dealing with these sensitive issues are greatly appreciated.

Attachment

cc: David Hawkins
Walt Barber
Mike James
Ed Reich

PM-123-80-12-19-001

DEC 19 1980

Honorable Jennings Randolph
Chairman, Committee on Environment
and Public Works
United States Senate
Washington, D.C. 20510

Dear Mr. Chairman:

Thank you for your letter of October 23, 1980 expressing your continued interest in the Agency's definition of "ambient air." During the time since David Hawkins, my Assistant Administrator for Air, Noise, and Radiation, met with you last February, the definition has been extensively reviewed and debated.

After reviewing the issues and alternatives, I have determined that no change from the existing policy is necessary. We are retaining the policy that the exemption from ambient air is available only for the atmosphere over land owned or controlled by the source and to which public access is precluded by a fence or other physical barriers. EPA will continue to review individual situations on a case-by-case basis to ensure that the public is adequately protected and that there is no attempt by sources to circumvent the requirement of Section 123 of the Clean Air Act.

I hope that this has been responsive to your needs.

Sincerely yours,

/s/ Douglas M. Costle

Douglas M. Costle

ENVIRONMENTAL PROTECTION AGENCY

40 CFR Part 51

[AD-FRL 2010-1; Docket No. A-79-01]

Stack Height Regulations

AGENCY: Environmental Protection Agency (EPA).

ACTION: Final rulemaking.

SUMMARY: Section 123 of the Clean Air Act requires EPA to promulgate regulations to assure that the degree of emission limitation required for the control of any air pollutant under an applicable State Implementation Plan (SIP) is not affected by that portion of any stack height which exceeds good engineering practice (GEP) or by any other dispersion technique. Regulations to implement Section 123 were proposed on January 12, 1979 at 44 FR 2608 and reproposed October 7, 1981 at 46 FR 49814. Today's action incorporates changes to the reproposal and finalizes these regulations.

DATE: These rules are effective March 10, 1982.

ADDRESS: Docket A-79-01, containing material relevant to this action, is located in the Central Docket Section (A-130), U.S. Environmental Protection Agency, 401 M Street, SW., Washington, D.C. 20460.

FOR FURTHER INFORMATION CONTACT: Mr. Bruce Polkowsky, MD-15, Office of Air Quality Planning and Standards, U.S. Environmental Protection Agency, Research Triangle Park, North Carolina 27711. Telephone: (919) 541-5540.

SUPPLEMENTARY INFORMATION:

Docket Statement

All pertinent information concerning the development of these regulations is included in Docket No. A-79-01. The Docket is open for inspection by the public between the hours of 8:00 a.m. and 4:00 p.m., Monday through Friday, at the EPA Central Docket Section, West Tower Lobby, Gallery One, 401 M Street, SW., Washington, D.C. Background documents normally available to the public, such as Federal Register notices and Congressional reports, are not included in the docket. A reasonable fee may be charged for copying documents.

I. Background

A. Statute

Section 123 was added to the Clean Air Act by the 1977 Clean Air Act Amendments. It prohibits stacks taller than good engineering practice (GEP) height and other dispersion techniques from affecting the emission limitations required to meet the national ambient air quality standards (NAAQS) or prevention of significant deterioration air quality increments (PSD increments). Section 123 requires EPA to promulgate regulations which define GEP stack height, and which restrict the use of other dispersion techniques, including intermittent or supplemental control techniques. This rulemaking fulfills this requirement. In the near future, EPA also intends to propose rules on the use of intermittent control techniques.

B. Rulemaking

On January 12, 1979 (44 FR 2608), EPA published a notice proposing limitations on stack height credit and other dispersion techniques. The notice proposed specific rules to be used in determining GEP stack height for any source and specific requirements for State Implementation Plan (SIP) revisions. EPA provided an extended period for the submission of public comments on these proposed regulations. EPA held a public hearing on May 31, 1979 followed by a 30-day period for the submission of additional comments (44 FR 24329, April 25, 1979). EPA provided for comments on additional technical information (44 FR 40359, July 11, 1979 and 46 FR 24590, May 1, 1981). Finally, EPA recently reproposed the regulations with changes made in response to the comments received (46 FR 49814, October 7, 1981).

Forty individuals and groups commented on the October 1981 proposal. EPA has considered all comments and has made a number of changes in the regulations in response to these comments. Most of these changes simply clarify the proposed rules. The revisions are outlined in Section IV: "Changes in the Regulations from the October 1981 Proposal." In addition, EPA has prepared a document entitled "Summary of Comments and Responses on the October 7, 1981 Proposal of the Stack Height Regulations." This document has been placed in Docket A-79-01, and, depending upon available supplies, copies may also be obtained from: EPA Library (MD-35), U.S. Environmental Protection Agency, Research Triangle Park, N.C. 27711. A copy of this document will be sent to all persons who submitted comments on the October 1981 proposal.

C. Documents

In conjunction with the regulations, EPA developed several technical and guidance documents. These served as background information for the regulations and all are included in Docket No. A-79-01. The following documents have been placed in the National Technical Information Service (NTIS) system and may be obtained by contacting NTIS at 5285 Port Royal Rd., Springfield, Virginia 22161.

(1) "Guideline for Determination of Good Engineering Practice Stack Height (Technical Support Document for Stack Height Regulations)," July 1981, U.S. Environmental Protection Agency, Office of Air Quality Planning and Standards, EPA-450/4-80-023. (NTIS PB82 145301)

(2) "Guideline for Use of Fluid Modeling to Determine Good Engineering Practice Stack Height," July 1981, U.S. Environmental Protection Agency, Office of Air Quality Planning and Standards, EPA-450/4-81-003. (NTIS PB82 145327)

(3) "Guideline for Fluid Modeling of Atmospheric Diffusion," April 1981, U.S. Environmental Protection Agency, Environmental Sciences Research Laboratory, EPA-600/8-81-009. (NTIS PB81 201410)

II. Program Overview

A. The Problem

There are two general methods for preventing violations of the NAAQS and PSD increments. Emission controls reduce, on a continuous basis, the quantity, rate, or concentrations of pollutants released into the atmosphere from a source. In contrast, dispersion techniques rely on the dispersive effects of the atmosphere to carry pollutant emissions away from a source and to prevent high concentrations of pollutants near the source. The Clean Air Act requires pollution sources to meet the NAAQS and PSD increments by complying with emission limitations instead of relying on dispersion techniques.[1] Section 123 defines stack height exceeding GEP as a dispersion technique.

Tall stacks and intermittent or supplemental control systems (ICS or SCS) are the two basic types of dispersion techniques. Tall stacks enhance dispersion by releasing pollutants into the air at elevations high above ground level, increasing the volume of air through which pollutants must travel to reach the ground. Releasing pollutants from a tall stack allows a source to reduce the ambient levels of its pollution as measured at ground level without reducing the amount of pollution it releases. Intermittent and supplemental control systems vary a source's rate of emissions to take advantage of

[1] See Sections 110(a)(2)(B), 123, 302(k), and 302(m) of the Act, 42 U.S.C. 7410(a)(2)(B), 7423, 7602(k), and 7602(m). The Notice of Proposed Rulemaking contains a more detailed discussion of the Act's prohibition of the use of dispersion techniques. See 44 FR 2608-2610.

meteorological conditions. When atmospheric conditions do not favor dispersion and an NAAQS may be violated, the source temporarily reduces its pollutant emissions. When conditions favor rapid dispersion, the source emits pollutants at higher rates.

Use of dispersion techniques instead of constant emission controls can result in additional atmospheric loadings which may contribute to undesirable environmental effects. The use of tall stacks increases the possibility that pollution will travel long distances before it settles to the ground.

Although dispersion techniques may produce adverse effects, some stack height is needed to prevent excessive concentrations of pollutant emissions created by airflow disruptions caused by structures, terrain features, and ground-level meteorological phenomena. These excessive concentrations result from interference with the plume. Section 123 responds to this problem by allowing EPA to give a source credit for that portion of its stack height needed to prevent excessive concentrations near the source. This height is called GEP stack height.

The regulations promulgated today define "excessive concentrations," "nearby," and other important concepts. They also establish methods for determining the GEP stack height for all stationary sources to which these regulations apply.

B. The Program

These regulations do not limit the physical stack height of any source, nor require any specific stack height for any source. Instead, they set limits on the maximum stack height credit to be used in ambient air quality modeling for the purpose of setting an emission limitation and calculating the air quality impact of a source. Sources are modeled at the physical stack height unless that height exceeds their GEP stack height. The regulations apply to all stacks constructed and all dispersion techniques implemented since December 31, 1970.

1. Methods of Determining GEP Stack Height. The regulations establish three basic methods of calculating a source's GEP stack height.

(a) De minimis height—EPA is adopting 65 meters as the minimum GEP stack height for all sources regardless of the size or location of any structures or terrain features. Sixty-five meters represents a reasonable estimate of the height needed to insure that emissions will not be affected by common ground-level meteorological phenomena which may produce excessive pollutant concentrations. Typical causes of these phenomena include surface roughness and the temperature changes caused by the solar heating and terrestrial cooling cycle (see page 26 of the Technical Support Document).

Virtually all significant sources of SO_2 can justify stack height credits greater than 65 meters. Accordingly, this de minimis height will have little effect on atmospheric loadings of sulfur dioxide.

(b) Mathematical Formulas—Excessive concentrations may be produced by downwash, wakes, and eddies caused by structures located near the stack. EPA is adopting two formulas with which to calculate the GEP stack height: One for stacks in existence on January 12, 1979 (the date of publication of EPA original proposed rules), and one for stacks constructed after that date.

For stacks in existence on January 12, 1979, EPA has adopted the traditional engineering formula of two and one-half times the height of the nearby structure ($H_g = 2.5H$) as the formula for determining the GEP stack height. For stacks constructed after January 12, 1979, EPA has established a refined formula of the height of the nearby structure plus one and one-half times the height or width of the structure, whichever is less ($H_g = H + 1.5L$) as the formula for determining the GEP stack height.

(c) Physical Demonstration—In some cases, a source may need a stack taller than the height predicted by the formulas to prevent excessive concentrations of a pollutant due to downwash, wakes, or eddies created by structures or terrain obstacles. In such cases, Section 123 provides that a source may obtain credit for all of the stack height necessary to avoid excessive concentrations provided it demonstrates to the satisfaction of the reviewing authority that the additional height is necessary.

EPA is requiring such a source to demonstrate that maximum concentrations caused by the source's emissions from its proposed stack height, without consideration of nearby structures or terrain obstacles, will increase by at least 40 percent when the effects of the structures or terrain obstacles are considered. This difference in concentrations must be shown either by a fluid model study conducted in accordance with guidelines published by EPA or by a field study which has been approved by the reviewing authority.

Before a source can obtain credit for a GEP stack height determined by a fluid model or field study demonstration, Section 123(c) requires that the reviewing authority must notify the public of the availability of the source's demonstration study and must provide an opportunity for a public hearing.

2. Method of Adjusting GEP Stack Height for Elevated Terrain Areas. As traditionally defined, plume impaction occurs when a plume emitted from a stack interacts with terrain that is taller than the stack. The contact between the plume and the terrain can produce high pollutant concentrations. EPA is establishing a procedure which will allow sources to adjust their GEP stack height to avoid modeled plume impaction on elevated terrain causing one to predict violations of the NAAQS or applicable PSD increments which will not occur. (This procedure is explained in Section IV.C.) The predicted violations will not occur because the physical stack height is sufficient to ensure that the plume passes over the elevated terrain.

Before a source can obtain credit for a GEP stack height based on allowances for terrain impaction, the reviewing authority must notify the public of the availability of the source's demonstration study and must provide an opportunity for a public hearing.

3. Grandfathered Stack Height. The 1970 Clean Air Act became effective on December 31, 1970. Prior to that date some sources had constructed stacks taller than their GEP height. In Section 123, Congress recognized this and exempted those sources' stack heights. Section 123 allows credit for stack height in existence on December 31, 1970. A source's stack is considered to be "in existence" if that stack was part of the design of a facility on which construction commenced prior to December 31, 1970.

4. Other Dispersion Techniques. The regulations prohibit the use of other dispersion techniques to attain or maintain any NAAQS or protect a PSD increment. Those techniques include major alteration of plume characteristics such as the manipulation of exhaust flow rates or temperatures for the purpose of enhancing plume rise. The regulation defines three types of dispersion techniques: (1) tall stacks, (2) use of ICS or SCS, and (3) addition of a fan or reheater to obtain a less stringent emission limitation. However, the regulations exempt (1) reheating of a gas stream following the use of a pollutant control system, (2) smoke management in agricultural or silvicultural programs, and (3) combining exhaust gases from several stacks into one stack.

III. State Implementation Plan Requirements

EPA is establishing a two-stage process for the implementation of these

regulations. All States must review and revise, as necessary, their SIPs to include provisions that limit stack height credits and dispersion techniques in accordance with these regulations. Section 406(d)(2) of the Clean Air Act Amendments of 1977 requires that these SIP revisions be submitted within nine months of promulgation of these regulations.

After EPA approves a State's stack height rules, the State must review existing limitations to determine whether these limitations have been affected by stack height credit above GEP levels or any other dispersion technique. If so, the State must revise the emission limitations to be consistent with its revised SIP.

IV. Changes in the Regulations From the October 7, 1981 Proposal

EPA has made several changes in the proposed regulations as a result of the public comments on the reproposed regulations. These changes are noted below.

A. Prospective Application of the New GEP Formula

On February 18, 1976 (41 FR 7450), EPA published the "Stack Height Increase Guideline" which provided guidance on its policy for the use of tall stacks. The guideline permitted credit for stacks up to two and one-half times the height of the facility it served. On November 3, 1977, after passage of the Clean Air Act Amendments of 1977, EPA promulgated a final rule on some changes to its prevention of significant deterioration (PSD) program (42 FR 57459). As part of the preamble to that notice, EPA defined GEP as "two and one-half times the height of the source" (2.5H).

On January 12, 1979 (44 FR 2608), EPA proposed regulations to implement Section 123 which refined the two and one-half times rule by defining GEP stack height as the height of a nearby structure plus one and one-half times the lesser of the height or width of the nearby structure (H+1.5L). That proposal and the reproposal of that regulation on October 7, 1981 (46 FR 49314) would have made the new formula retroactive to December 31, 1970.

Four commenters argued that EPA's definition of GEP, until January 12, 1979, had been based on two and one-half times the building height and that sources in good faith had constructed stacks in accordance with that definition. Applying the new formula retroactively would be unfair to those sources. The commenters argued that the new formula should be applied prospectively.

In response to these comments, EPA has developed two formulas for determining GEP stack height: (1) For stacks in existence on January 12, 1979, the formula is $H_g = 2.5H$; (2) for all other stacks, the formula is $H_g = H + 1.5L$.

B. Definition of "in existence"

Section 123 does not affect stack heights "in existence" on December 31, 1970. In October 1981, EPA proposed to define "in existence" to mean that the owner or operator of a stack had obtained all necessary preconstruction permits or approvals required by Federal, State or local air pollution control agencies, and either (1) actually commenced construction, or (2) entered into a binding commitment for construction.

Comments on the reproposed definition stated that this new definition would discriminate unfairly against sources located in the few States or local jurisdictions which required construction permits for air pollution sources in 1970. (There were no Federal permit programs in 1970.) EPA agrees that the reproposed definition might operate unfairly. EPA has deleted the requirement for such approvals or permits in determining whether a source's stack is "in existence" as of December 31, 1970.

However, the regulations now apply the two and one-half times formula for determining GEP only to stacks "in existence" on January 12, 1979. Federal requirements for preconstruction permits for air pollution sources were effective well before 1979. Accordingly, EPA is retaining the permit requirement for sources which want to claim credit for stacks "in existence" as of January 12, 1979. EPA has changed § 51.1(ii), which defines GEP, to require sources wishing to use the two and one-half times formula to show that they had obtained, prior to January 12, 1979, all preconstuction permits required by 40 CFR Parts 51 and 52.

The remaining portions of the definition of "in existence" are identical to the October 1981 proposal.

C. Impaction Credit

Many comments on the January 1979 proposal asked EPA to provide stack height credit for a source which experiences plume impaction. Plume impaction occurs when a plume emitted from a stack interacts with a terrain feature that is taller than the stack. The contact between the plume and the terrain feature can produce high pollutant concentrations, especially under stable atmospheric conditions in which the plume disperses slowly.

EPA decided that sources should receive stack height credit when impaction produces concentrations high enough to violate an NAAQS or applicable PSD increment. EPA included in its October 1981 reproposal a procedure for determining the amount of credit needed to prevent plume impaction.

EPA has received three types of comments on the proposed impaction credit. Environmental groups claimed that Section 123 does not authorize impaction credits. Several industrial commenters asked EPA to clarify the proposed procedures for impaction credits. Finally, some industrial commenters asked EPA to modify a portion of its proposed procedures. To respond to these comments, EPA is presenting below a brief description of its rationale and procedures for impaction credits. EPA is also providing a brief explanation of its reason for declining to make procedural modifications.

(1) Rationale

Plume impaction resembles downwash, wakes, and eddies. In all of these events, structures or terrain features interfere with plume dispersion. If the interference occurs relatively close to the stack, before the plume has had adequate opportunity to disperse, high concentrations of pollutants can occur.

In enacting Section 123, Congress decided that sources should be allowed sufficient stack height credit to prevent high pollutant concentrations caused by downwash, wakes, and eddies. Congress called this height "good engineering practice." Any additional stack height was to be regarded as a dispersion technique that might allow a source to relax its emissions limitations. Section 123 does not mention impaction. However, neither the language of the statute nor the legislative history show that this omission was deliberate. EPA considers impaction to be enough like downwash that the same rationale should apply. GEP stack height should include credit needed to avoid high concentrations caused by impaction. Accordingly, EPA has decided to exercise general rulemaking authority to establish stack height credit needed to prevent high concentrations caused by plume impaction.

EPA recognizes Congress did not want the stack height rules to grant too much credit to sources locating in complex terrain, for "the result could be an open invitation to raise stack heights to unreasonably high elevations." H.R

Rep. No. 95-294, 95th Cong., 1st Sess. at 91 (1977). Therefore, EPA has carefully tailored impaction credit procedures to provide only the minimum stack height credit needed to avoid high concentrations [1] produced by impaction. These procedures are described in more detail below.

EPA is convinced that its narrowly drawn rules represent a reasonable solution for a plume effect that closely resembles the phenomena of downwash, wakes, and eddies. Credits for plume impaction, when carefully limited, should not be regarded as a dispersion technique. Although the promulgated procedure allows for the use of some stack height to avoid high pollutant concentrations on elevated terrain, it does not permit excessive dispersion credits.

(2) Explanation of Procedures

EPA has developed a three-step procedure for determining the amount of stack height credit appropriate for a source with a predicted impaction concentration violating an NAAQS or applicable PSD increment.

First, a source must determine its downwash GEP height—the amount of stack height that can be justified based on downwash, wakes, or eddies—using any of the three methods described in Section II.B. above. Using this GEP height, the source must show that its plume would come into contact with elevated terrain (defined as terrain taller than this GEP height) and together with background concentrations cause a violation of an NAAQS or applicable PSD increment. If the source cannot show that a violation would occur, it cannot claim any impaction credit. Its stack height credit would be limited to the GEP height already calculated.

If a violation is modeled, the second step is to determine the source's maximum allowable emission limitation. In this step the source would model its air quality impact using the previously determined GEP height and assuming that the terrain feature(s) causing impaction is no taller than its downwash GEP height. Using the appropriate maximum concentration from this modeling scenario, the source would calculate an emission limitation which would become its maximum allowable emission limitation.

The third step allows the source to adjust its GEP stack height to account for the plume impaction on actual terrain features above the downwash GEP stack height. The source cannot adjust its maximum allowable emission limitation. The source would model its air quality impact again, this time using actual terrain elevations, but limiting its emissions to the rate fixed by the emission limitation developed in step two. The source would increase the height of the stack in the model to the height at which the maximum concentration predicted to occur on elevated terrain equaled the maximum concentration predicted to occur in step two. This increased stack height is the source's maximum GEP height to avoid high concentrations due to impaction.

Like the downwash GEP height, this stack height will represent maximum allowable credit. The source would not be able to claim this credit if its physical (actual or proposed) stack height were not as tall as its maximum creditable height. In that case, the source would be able to claim only its physical stack height. A source with physical stack height lower than its allowable GEP height would have to adjust its emission limitation downward to prevent a violation of an NAAQS or applicable PSD increment.

(3) Modification Requested by Commenters

The electric utilities requested that EPA assume, during the Step two modeling, that all terrain features are no taller than ground elevation at the base of the stack or, in other words, that the source is located in absolutely flat terrain. The utilities believe that this assumption is necessary to ensure equity between sources located in elevated terrain and sources in flat terrain.

EPA has decided not to make this change to its procedure. EPA's objective is to provide the minimum stack height credit needed to allow a source to avoid high concentrations caused by plume impaction. A source in assumed flat terrain would obtain a less restrictive emission limitation than a source in terrain assumed to be as tall as its downwash GEP height. The flat terrain assumption would thus allow a source to obtain more stack height credit than needed to prevent impaction. It would also have a greater negative impact on air quality by allowing taller stacks and more relaxed emission limits.

D. Dispersion Technique

EPA received numerous comments on the definition of the term "dispersion technique." Most of these comments stated that wording concerning the enhancement of plume rise was vague. Comments specifically mentioned that many changes in operation or equipment made for engineering purposes, to improve reliability or efficiency, could be construed as a dispersion technique. This is not the intent of the definition. EPA has changed the definition of dispersion technique to prevent the addition of a fan or reheater to obtain a less stringent emission limitation. The purpose of this change is to prevent only the installation of equipment clearly intended to enchance plume rise. The new definition should not prevent equipment changes intended to improve reliability and efficiency.

E. Definition of "Stack"

Comments on the January 1979 proposal urged EPA to exempt "flares" from the definition of "stack." EPA agreed that flares, which are designed to dispense heat and vent emissions intermittently for safety purposes, do not serve the same purpose as stacks, which are typically a source's major and most constant emissions point. EPA announced that it would exempt flares from the stack height regulations in the preamble to the October 1981 reproposal. New comments urged EPA to include this exemption in the regulations themselves to eliminate any potential for confusion or misunderstanding. In response to these comments, EPA is incorporating a specific exemption for flares into the definition of "stack."

F. Section 123 and Physical Stack Height

EPA received several comments on the October 1981 reproposal which indicated that the commenters believed that the proposed regulations would give EPA authority to limit a source's actual stack height. EPA did not intend to create this impression. In fact, EPA stated in the preamble to the reproposal that Section 123 expressly prohibits the Agency from limiting physical stack height. Section 123 limits only the theoretical stack height used in determining a source's emission limitation. However, to eliminate this confusion, EPA is adding a statement to §§ 51.12(j) and 51.18(l) of the regulations stating that these regulations do not restrict in any manner the actual height of any stack at any source.

[1] EPA considers "high concentrations" to be a violation of an NAAQS or applicable PSD increment. Unlike "excessive concentrations" caused by downwash, high concentrations caused by plume impaction occur in different meteorological conditions than downwash and are longer in duration. High concentrations due to plume impaction can be compared easily to an NAAQS or applicable PSD increment. Therefore, EPA has required that the concentration caused by plume impaction must be in excess of an NAAQS or applicable PSD increment before a source can adjust its GEP stack height.

G. Measurement of Stack Height

In the proposed definition of a "stack," EPA stated that the "stack height is the distance from the ground-level elevation of the plant to the elevation of the stack outlet." Several commenters requested clarification in the establishing the ground-level elevation of the plant. For instance, the commenters noted that where a plant was built on a slope the regulation could [illegible] plant site should be included in just the portion of the plant site considered "nearby" the stack.

EPA is changing the regulations to clarify this point. EPA deleted from the definition of a "stack," the statement defining stack height. However, EPA clarified the methods for determining GEP stack height by stating that all stack and structure heights are measured from the ground-level elevation at the base of the stack.

If a stack is on top of a building, the ground-level elevation of the building is used as the base elevation. In order to appropriately assess the impact of nearby structures on this stack height, the height of structures is also determined relative to the ground-level elevation of the stack.

H. Minor Wording Changes

Several commenters identified typographical errors and areas where minor wording changes could clarify the regulations. These and other wording changes have been made to correct and to clarify the regulations. These changes did not have any significant effect on the regulations.

V. Impact Analysis

EPA has prepared a series of impact analyses on these regulations. These analyses are in Docket A-79-01. The analyses show that the expected "worst-case" national annual costs to fossil-fuel fired power plants should be less than $45 million per year. These costs result from conservative estimates of required purchases of lower sulfur coal and estimates of required retrofit of electrostatic precipitators at some plants which purchase the lower sulfur coal. The worst-case analyses show that the expected reduction in SO_2 emissions is less than 200,000 tons per year. Nationally, these costs could increase electric utility rate charges approximately 0.1 to 0.2 percent. Increases for individual power company rates could range from 0.5 to 30 percent.

VI. Regulatory Flexibility Analysis

Pursuant to the provisions of 5 U.S.C. 605(b), I hereby certify that the attached rule will not have significant economic impact on a substantial number of small entities. This rule applies only to large sources. The impact assessment predicted that these regulations would not have significant impact on any small entities. Based upon our impact analysis, only electric utility plants and possibly one smelter will be [illegible]

VII. Executive Order 12291

Under Executive Order 12291, EPA must judge whether a regulation is "major" and therefore subject to the requirement of a Regulatory Impact Analysis. This regulation is not "major" because it does not result in an annual effect on the economy of $100 million, nor does it result in a major increase in costs or prices for consumers, Federal, State, or local governments or individual industries, including the electric power industry.

VIII. Judicial Review

EPA believes that this rule is based on determinations of nationwide scope and effect. Nothing in Section 123 limits its applicability to a particular locality, State, or region. On the contrary, Section 123 applies to sources wherever located. Because of the rule's national applicability, Section 307(b) [42 U.S.C. 7607(b)] requires that any petition for review of the promulgated rule be filed only in the United States Court of Appeals for the District of Columbia and within 60 days of the date of publication.

(Secs. 110, 123, 301, Clean Air Act as amended (42 U.S.C. 7410, 7423, and 7601)

Dated: January 31, 1982.

John W. Hernandez, Jr.,

Acting Administrator.

PART 51—REQUIREMENTS FOR PREPARATION, ADOPTION, AND SUBMITTAL OF IMPLEMENTATION PLANS

Part 51 of Chapter I, Title 40 of the Code of Federal Regulations is amended as follows:

1. Section 51.1 is amended by revising paragraph (z) and by adding paragraphs (ff), (gg), (hh), (ii), (jj), (kk), (ll), and (mm) as follows:

§ 51.1 Definitions.

• • • • •

(z) "Emission limitation" and "emission standard" mean a requirement established by a State, local government, or the Administrator which limits the quantity, rate, or [illegible] of emissions of air pollutants on a continuous basis, including any requirements which limit the level of opacity, prescribe equipment, set fuel specifications, or prescribe operation or maintenance procedures for a source to assure continuous emission reduction.

• • • • •

(ff) "Stack" means any point in a source designed to emit solids, liquids [illegible]

(gg) "A stack in existence" means that the owner or operator had (1) begun, or caused to begin, a continuous program of physical on-site construction of the stack or (2) entered into binding agreements or contractual obligations, which could not be cancelled or modified without substantial loss to the owner or operator, to undertake a program of construction of the stack to be completed in a reasonable time.

(hh) "Dispersion technique" means any technique which attempts to affect the concentration of a pollutant in the ambient air by using that portion of a stack which exceeds good engineering practice stack height, varying the rate of emission of a pollutant according to atmospheric conditions or ambient concentrations of that pollutant, or by addition of a fan or reheater to obtain a less stringent emission limitation. The preceding sentence does not include: (1) The reheating of a gas stream, following use of a pollution control system, for the purpose of returning the gas to the temperature at which it was originally discharged from the facility generating the gas stream; (2) the use of smoke management in agricultural or silvicultural programs; or (3) combining the exhaust gases from several stacks into one stack.

(ii) "Good engineering practice (GEP) stack height" means the greater of:

(1) 65 meters;

(2)(i) For stacks in existence on January 12, 1979 and for which the owner or operator had obtained all applicable preconstruction permits or approvals required under this Parts 51 and 52 of this Title 40, $H_g = 2.5H$

(ii) for all other stacks,

$H_g = H + 1.5L$, where

H_g = good engineering practice stack height, measured from the ground-level elevation at the base of the stack,

H = height of nearby structure(s) measured from the ground-level elevation at the base of the stack,

L = lesser dimension (height or projected width) of nearby structure(s);

(3) The height demonstrated by a fluid model or a field study approved by the

reviewing agency, which ensures that the emissions from a stack do not result in excessive concentrations of any air pollutant as a result of atmospheric downwash, wakes, or eddy effects created by the source itself, structures, or terrain obstacles.

(jj) "Nearby" as used in § 51.1(ii)(2) is that distance up to five times the lesser of the height or the width dimension of a structure but not greater than 0.8 km (one-half mile). The height of the structure is measured from the ground-level elevation at the base of the stack.

(kk) "Excessive concentrations" for the purpose of determining good engineering practice stack height in a fluid model or field study means a maximum concentration due to downwash wakes, or eddy effects produced by structures or terrain features which is at least 40 percent in excess of the maximum concentration experienced in the absence of such downwash, wakes, or eddy effects.

(ll) "Plume impaction" means concentrations measured or predicted to occur when the plume interacts with elevated terrain.

(mm) "Elevated terrain" means terrain which exceeds the elevation of the good engineering practice stack as calculated under paragraph (ii) of this section.

2. Section 51.12 is amended by adding paragraphs (j), (k), and (l) as follows:

§ 51.12 Control strategy: General.

* * * * *

(j) The plan must provide that the degree of emission limitation required of any source for control of any air pollutant must not be affected by so much of any source's stack height that exceeds good engineering practice or by any other dispersion technique, except as provided in § 51.12(k) and (l). The plan must provide that before a State submits to EPA a new or revised emission limitation that is based on a good engineering practice stack height that exceeds the height allowed by § 51.1(ii) (1) or (2), the State must notify the public of the availability of the demonstration study and must provide opportunity for public hearing on it. This Section does not require the plan to restrict, in any manner, the actual stack height of any source.

(k) The provisions of §§ 51.12(j) and 51.18(j) shall not apply to (1) stack heights in existence, or dispersion techniques implemented prior to December 31, 1970, or (2) coal-fired steam electric generating units, subject to the provisions of Section 118 of the Clean Air Act, which commenced operation before July 1, 1957, and whose stacks were constructed under a construction contract awarded before February 8, 1974.

(l) The good engineering practice (GEP) stack height for any source seeking credit because of plume impaction which results in concentrations in violation of national ambient air quality standards or applicable prevention of significant deterioration increments can be adjusted by determining the stack height necessary to predict the same maximum air pollutant concentration on any elevated terrain feature as the maximum concentration associated with the emission limit which results from modeling the source using the GEP stack height as determined in § 51.1(ii) and assuming the elevated terrain features to be equal in elevation to the GEP stack height. If this adjusted GEP stack height is greater than the stack height the source proposes to use, the source's emission limitation and air quality impact shall be determined using the proposed stack height and the actual terrain heights.

3. Section 51.18 is amended by adding paragraph (l) as follows:

§ 51.18 Review of new sources and modifications.

* * * * *

(l) Such procedures must provide that the degree of emission limitation required of any source for control of any air pollutant must not be affected by so much of any source's stack height that exceeds good engineering practice or by any other dispersion technique, except as provided in § 51.12(k) and (l). Such procedures must provide that before a State issues a permit to a source based on a good engineering practice stack height that exceeds the height allowed by § 51.1(ii) (1) or (2), the State must notify the public of the availability of the demonstration study and must provide opportunity for public hearing on it. This section does not require such procedures to restrict, in any manner, the actual stack height of any source.

[FR Doc. 82-32... Filed 2-5-82; 8:45 am]

BILLING CODE 6560-26-M

UNITED STATES ENVIRONMENTAL PROTECTION AGENCY
WASHINGTON, D.C. 20460

JUN 21 1982

OFFICE OF
AIR, NOISE AND RADIATION

MEMORANDUM

SUBJECT: Definition of "Continuous Compliance" and Enforcement of O&M Violations

FROM: Kathleen M. Bennett
Assistant Administrator for Air, Noise and Radiation

TO: Directors, Air and Waste Management Divisions
Regions I-IV, VI-VIII and X

Directors, Air Management Divisions
Regions V and IX

The purpose of this memo is to provide you with some general programmatic guidance as to the meaning of the term "continuous compliance" and the role of operation and maintenance (O&M) requirements in assuring that continuous compliance is maintained. Of course, source specific guidance on O&M measures which can assure continuous compliance is an essential part of this program and this memorandum is not intended to substitute for such guidance. As you know, DSSE has undertaken a number of initiatives related to the continuous compliance effort and we hope to discuss the progress of those efforts with you at the upcoming workshop at Southern Pines. DSSE will be forwarding to you an updated summary of those activities prior to the workshop. However, given the continuing attention being given to "continuous compliance," I think it would be helpful to have a common understanding of what that concept entails.

In the strict legal sense, sources are required to meet, without interruption, all applicable emission limitations and other control requirements, unless such limitations specifically provide otherwise. However, of primary concern to the Agency are those violations that could have been prevented, through the installation of proper control equipment and the operation and maintenance of that equipment in accordance with proper procedures. We believe the concept of continuous compliance is essentially the avoidance of preventable excess emissions over time as a result of the proper design, operation and maintenance of an air pollution source. This includes avoidance of preventable instances of excess emissions, minimization of

emissions during such instances, and the expeditious termination of any instances which do occur.

In determining the appropriate enforcement response to a violation, one factor the Regions should consider is whether the source had in place an active program designed to maintain continuous compliance. Such a program would normally involve one or more of the following elements: continuous or periodic self-monitoring of emissions; monitoring of operating parameters such as scrubber pressure drop, incinerator combustion temperature or flow rates; maintenance of a spare parts inventory; maintenance of spare control device modules; and procedures designed to correct the types of violations that are most likely to occur. Evaluating a violator's O&M program is a necessary step in determining the type and degree of relief that an enforcement action could be expected to achieve.

Documentation of avoidable departures from proper procedures as just discussed may be used not only as supporting evidence in cases involving emission limit violations, but as primary evidence in cases involving violations of O&M requirements specified in permits and regulations. As the Agency continues to place more emphasis on O&M requirements in the context of national standards, and to encourage States to develop O&M requirements, the enforcement program must be adapted to address violations of these requirements. A violation of specified O&M requirements, even in the absence of documented emission limit violations, can be an appropriate trigger for EPA enforcement response.

In conclusion, evaluation of a source's continuing compliance program would be useful both in determining the appropriate Agency response to an emission limit violation, and in assessing the source's compliance with specified O&M requirements.

If my staff can be of assistance in evaluating specific cases, please feel free to call John Rasnic at 382-2826.

UNITED STATES ENVIRONMENTAL PROTECTION AGENCY
WASHINGTON, D.C. 20460

SEP 28 1982

OFFICE OF
AIR, NOISE AND RADIATION

MEMORANDUM

SUBJECT: Policy on Excess Emissions During Startup, Shutdown, Maintenance, and Malfunctions

FROM: Kathleen M. Bennett
Assistant Administrator for Air, Noise and Radiation

TO: Regional Administrators, Regions I-X

This memorandum is in response to a request for a clarification of EPA's policy relating to excess emissions during startup, shutdown, maintenance, and malfunctions.

Excess emission provisions for startup, shutdown, maintenance, and malfunctions were often included as part of the original SIPs approved in 1971 and 1972. Because the Agency was inundated with proposed SIPs and had limited experience in processing them, not enough attention was given to the adequacy, enforceability, and consistency of these provisions. Consequently, many SIPs were approved with broad and loosely-defined provisions to control excess emissions.

In 1978, EPA adopted an excess emissions policy after many, less effective attempts to rectify problems that existed with these provisions. This policy disallowed automatic exemptions by defining all periods of excess emissions as violations of the applicable standard. States can, of course, consider any demonstration by the source that the excess emissions were due to an unavoidable occurrence in determining whether any enforcement action is required.

The rationale for establishing these emissions as violations, as opposed to granting automatic exemptions, is that SIPs are ambient-based standards and any emissions above the allowable may cause or contribute to violations of the national ambient air quality standards. Without clear definition and limitations, these automatic exemption provisions could effectively shield excess emissions arising from poor operation and maintenance or design, thus precluding attainment. Additionally, by establishing an enforcement discretion approach and by requiring the source to demonstrate the existence of an unavoidable malfunction on the source, good maintenance procedures are indirectly encouraged.

Attached is a document stating EPA's present policy on excess emissions. This document basically reiterates the earlier policy, with some refinement of the policy regarding excess emissions during periods of scheduled maintenance.

A question has also been raised as to what extent operating permits can be used to address excess emissions in cases where the SIP is silent on this issue or where the SIP is deficient. Where the SIP is silent on excess emissions, the operating permit may contain excess emission provisions which should be consistent with the attached policy. Where the SIP is deficient, the SIP should be made to conform to the present policy. Approval of the operating permit as part of the SIP would accomplish that result.

If you have any questions concerning this policy, please contact Ed Reich at (382-2807).

Attachment

Attachment

POLICY ON EXCESS EMISSIONS DURING START-UP, SHUTDOWN, MAINTENANCE, AND MALFUNCTIONS.

Several of the existing State implementation plans (SIPs) provide for an automatic emission limitation exemption during periods of excess emission due to start-up, shutdown, maintenance, or malfunction.* Generally, EPA agrees that the imposition of a penalty for sudden and unavoidable malfunctions caused by circumstances entirely beyond the control of the owner and/or operator is not appropriate. However, any activity which can be foreseen and avoided, or planned is not within the definition of a sudden and unavoidable breakdown. Since the SIPs must provide for attainment and maintenance of the national ambient air quality standards, SIP provisions on malfunctions must be narrowly drawn. SIPs may, of course, omit any provision on malfunctions. [For more specific guidance on malfunction provisions for RACT SIPs, see the April 1978 workshop manual for preparing nonattainment plans.]

I. AUTOMATIC EXEMPTION APPROACH

If a SIP contains a malfunction provision, it cannot be the type that provides for automatic exemption where a malfunction is alleged by a source. Automatic exemptions might aggravate air quality so as not to provide for attainment of the ambient air quality standards. Additional grounds for disapproving a SIP that includes the automatic exemption approach are discussed in more detail at 42 FR 58171 (November 8, 1977) and 42 FR 21372 (April 27, 1977). As a result, EPA cannot approve any SIP revision that provides automatic exemptions for malfunctions.

II. ENFORCEMENT DISCRETION APPROACH--SIP EMISSION LIMITATION ADEQUATE TO ATTAIN AMBIENT STANDARDS

EPA can approve SIP revisions which incorporate the "enforcement discretion approach". Such an approach can require the source to demonstrate to the appropriate State agency that the excess emissions, though constituting a violation, were due to an unavoidable malfunction. Any malfunction provision must provide for the commencement of a proceeding to notify the source of its violation and to determine whether enforcement action should be undertaken for any period of excess emissions. In determining whether an enforcement action is appropriate, satisfaction of the following criteria should be considered:

* The term "excess emission" means an air emission rate which exceeds any applicable emission limitation, and "malfunction" means a sudden and unavoidable breakdown of process or control equipment.

1. To the maximum extent practicable the air pollution control equipment, process equipment, or processes were maintained and operated in a manner consistent with good practice for minimizing emissions;

2. Repairs were made in an expeditious fashion when the operator knew or should have known that applicable emission limitations were being exceeded. Off-shift labor and overtime must have been utilized, to the extent practicable, to ensure that such repairs were made as expeditiously as practicable;

3. The amount and duration of the excess emissions (including any bypass) were minimized to the maximum extent practicable during periods of such emissions;

4. All possible steps were taken to minimize the impact of the excess emissions on ambient air quality; and

5. The excess emissions are not part of a recurring pattern indicative of inadequate design, operation, or maintenance.

III. EXCESS EMISSIONS DURING START-UP, SHUTDOWN, AND MAINTENANCE

Any activity or event which can be foreseen and avoided, or planned, falls outside of the definition of sudden and unavoidable breakdown of equipment. For example, a sudden breakdown which could have been avoided by better operation and maintenance practices is not a malfunction. In such cases, the control agency must enforce for violations of the emission limitation. Other such common events are start-up and shutdown of equipment, and scheduled maintenance.

Start-up and shutdown of process equipment are part of the normal operation of a source and should be accounted for in the design and implementation of the operating procedure for the process and control equipment. Accordingly, it is reasonable to expect that careful planning will eliminate violations of emission limitations during such periods.

If excess emissions occur during routine start-up and shutdown of such equipment, they will be considered as having resulted from a malfunction only if the source can demonstrate that such emissions were actually caused by a sudden and unforeseeable breakdown in the equipment.

Similarly, scheduled maintenance is a predictable event which can be scheduled at the discretion of the operator, and which can therefore be made to coincide with maintenance on

production equipment, or other source shutdowns. Consequently, excess emissions during periods of scheduled maintenance should be treated as a violation unless a source can demonstrate that such emissions could not have been avoided through better scheduling for maintenance or through better operation and maintenance practices.

PN 113-83-02-15-017

UNITED STATES ENVIRONMENTAL PROTECTION AGENCY
WASHINGTON, D.C. 20460

FEB 15 1983

OFFICE OF
AIR, NOISE AND RADIATION

MEMORANDUM

SUBJECT: Policy on Excess Emissions During Startup, Shutdown, Maintenance, and Malfunctions

FROM: Kathleen M. Bennett, Assistant Administrator for Air, Noise and Radiation

TO: Regional Administrators, Regions I-X

I have been asked to clarify my memorandum of September 28, 1982, concerning policy on excess emissions during startup and shutdown.

Specifically, I stated that "startup and shutdown of process equipment are part of the normal operation of a source and should be accounted for in the design and implementation of the operating procedure for the process and control equipment. Accordingly, it is reasonable to expect that careful planning will eliminate violations of emission limitations during such periods." I further stated that "[i]f excess emissions occur during routine startup and shutdown of such equipment, they will be considered as having resulted from a malfunction only if the source can demonstrate that such emissions were actually caused by a sudden and unforeseeable breakdown in the equipment."

A question has been posed as to whether there can be situations in which it is unreasonable to expect that careful planning can eliminate violations of emission limitations during startup and shutdown. I believe that there can be such situations. One such situation, which was already mentioned in the policy, is a malfunction occurring during these periods. A malfunction during startup or shutdown is to be handled as any other malfunction in accordance with the policy as presently written.

Another situation is one in which careful and prudent planning and design will not totally eliminate infrequent short periods of excesses during startup and shutdown. An example of this situation would be a source that starts up or shuts down once or twice a year and during that period there are a few hours when the temperature of the effluent gas is too low to prevent harmful

formation of chemicals which would cause severe damage to control equipment if the effluent were allowed to pass through the control equipment.

Therefore, during this latter situation, if effluent gases are bypassed which cause an emission limitation to be exceeded, this excess need not be treated as a violation if the source can show that the excesses could not have been prevented through careful and prudent planning and design and that bypassing was unavoidable to prevent loss of life, personal injury, or severe property damage.

I have clarified the policy concerning this issue. A copy is attached.

Attachment

Attachment

POLICY ON EXCESS EMISSIONS DURING STARTUP, SHUTDOWN, MAINTENANCE, AND MALFUNCTIONS

Introduction

Several of the existing State implementation plans (SIPs) provide for an automatic emission limitation exemption during periods of excess emission due to startup, shutdown, maintenance, or malfunction.* Generally, EPA agrees that the imposition of a penalty for sudden and unavoidable malfunctions caused by circumstances entirely beyond the control of the owner and/or operator is not appropriate. However, any activity which can be foreseen and avoided, or planned is not within the definition of a sudden and unavoidable breakdown. Since the SIPs must provide for attainment and maintenance of the national ambient air quality standards, SIP provisions on malfunctions must be narrowly drawn. SIPs may, of course, omit any provisions on malfunctions. [For more specific guidance on malfunction provisions for RACT SIPs, see the April 1978 workshop manual for preparing nonattainment plans].

I. EXCESS EMISSION FROM MALFUNCTIONS

A. AUTOMATIC EXEMPTION APPROACH

If a SIP contains a malfunction provision, it cannot be the type that provides for automatic exemption where a malfunction is alleged by a source. Automatic exemptions might aggravate air quality so as not to provide for attainment of the ambient air quality standards. Additional grounds for disapproving a SIP that includes the automatic exemption approach are discussed in more detail at 42 FR 58171 (November 8, 1977) and 42 FR 21372 (April 27, 1977). As a result, EPA cannot approve any SIP revisions that provides automatic exemptions for malfunctions.

* The term "excess emission" means an air emission rate which exceeds any applicable emission limitation, and "malfunction" means a sudden and unavoidable breakdown of process or control equipment.

B. ENFORCEMENT DISCRETION APPROACH--SIP EMISSION LIMITATION ADEQUATE TO ATTAIN AMBIENT STANDARDS

EPA can approve SIP revisions which incorporate the "enforcement discretion approach". Such an approach can require the source to demonstrate to the appropriate State agency that the excess emissions, though constituting a violation, were due to an unavoidable malfunction. Any malfunction provision must provide for the commencement of a proceeding to notify the source of its violation and to determine whether enforcement action should be undertaken for any period of excess emissions. In determining whether an enforcement action is appropriate, satisfaction of the following criteria should be considered.

1. To the maximum extent practicable the air pollution control equipment, process equipment, or processes were maintained and operated in a manner consistent with good practice for minimizing emissions;

2. Repairs were made in an expeditious fashion when the operator knew or should have known that applicable emission limitations were being exceeded. Off-shift labor and overtime must have been utilized, to the extent practicable, to ensure that such repairs were made as expeditiously as practicable;

3. The amount and duration of the excess emissions (including any bypass) were minimized to the maximum extent practicable during periods of such emissions;

4. All possible steps were taken to minimize the impact of the excess emissions on ambient air quality; and

5. The excess emissions are not part of a recurring pattern indicative of inadequate design, operation, or maintenance.

II. EXCESS EMISSIONS DURING STARTUP, SHUTDOWN, AND MAINTENANCE

Any activity or event which can be foreseen and avoided, or planned, falls outside of the definition of sudden and unavoidable breakdown of equipment. For example, a sudden breakdown which could have been avoided by better operation and maintenance practice is not a malfunction. In such cases, the control agency must enforce ~~for~~ violations of the emission limitation. Other such common events are startup and shutdown of equipment, and scheduled maintenance.

Startup and shutdown of process equipment are part of the normal operation of a source and should be accounted for in the planning, design and implementation of operating procedures for the process and control equipment. Accordingly, it is reasonable to expect that careful and prudent planning and design will eliminate violations of emission limitations during such periods. However, for a few sources there may exist infrequent short periods of excess emissions during startup and shutdown which cannot be avoided. Excess emissions during these infrequent short periods need not be treated as violations providing that the source adequately shows that the excess could not have been prevented through careful planning and design and that bypassing of control equipment was unavoidable to prevent loss of life, personal injury, or severe property damage.

If excess emissions occur during routine startup and shutdown due to a malfunction, then those instances will be treated as other malfunctions which are subject to the malfunction provisions of this policy. (Reference Part I above).

Similarly, scheduled maintenance is a predictable event which can be scheduled at the discretion of the operator, and which can, therefore, be made to coincide with maintenance on production equipment, or other source shutdowns. Consequently, excess emissions during periods of scheduled maintenance should be treated as a violation unless a source can demonstrate that such emissions could have been avoided through better scheduling for maintenance or through better operation and maintenance practices.

MAR 18 1983

Mr. Harry H. Hovey, Jr. P.E.
Director, Division of Air
New York State Dept. of
Environmental Conservation
50 Wolf Road
Albany, New York 12233

Dear Mr. Hovey:

In response to your letter of January 11, please be advised that there has been no major change in EPA policy with regard to ambient air and the associated requirements of a SIP demonstration. We have defined "ambient air" at 40 CFR §50.1(e) to include "that portion of the atmosphere, external to buildings, to which the general public has access." Our general policy is that the only exemption to compliance with the provisions of ambient air is for the atmosphere over land owned or controlled by the source and to which public access is precluded by a fence or other physical barriers.

The national ambient air quality standards are designed to protect the public health and welfare and apply to all ambient air which does include the rooftops and balconies of buildings accessible by the public. While EPA has the responsibility to develop the air quality standards, the States have the initial responsibility to implement them. In effect, the States have the prime responsibility to protect public health and welfare.

While EPA considers ambient air to include elevated building receptor sites, it is not practical to analyze the air quality at every such existing location. Therefore, both EPA and the States must exercise their best technical judgment as to when such sites must be evaluated so as to protect public health and welfare. Thus, we do not expect States, in most circumstances, to evaluate the impact on elevated building receptors. However, if the State has reason to believe that such an evaluation is necessary to protect public health and welfare, then it is incumbent upon the State to conduct such an analysis.

I appreciate your interest in this issue and am willing to discuss it further if you desire.

Sincerely yours,

Kathleen M. Bennett
Assistant Administrator
for Air, Noise, and Radiation

cc: R. Campbell
J. Schafer

UNITED STATES ENVIRONMENTAL PROTECTION AGENCY PN 110-83-05-26-068

DATE 26 MAY 1983

SUBJECT Definition of Ambient Air for Lead

FROM Darryl D. Tyler, Director
Control Programs Development Division (MD-15)

TO Allyn Davis, Director
Air & Waste Management Division, Region VI

This is in response to your memorandum of May 23, 1983, to Sheldon Meyers. In that memorandum, you indicated that the Texas Air Control Board (TACB) believes that an ambient lead monitor in El Paso is not located in the ambient air, and therefore the data from that monitor should not be used to develop a control strategy for lead.

The monitor is located at the International Boundary Water Commission's (IBWC) property, about 1000 feet from the edge of the property of ASARCO's primary lead smelter. TACB believes that the monitor is not in the ambient air because public exposure at the IBWC property would at most be only daily for a period of not more than eight hours, and therefore no one person is expected to be at the IBWC site continuously for a full three months, the exposure time inherent in the lead standard.

TACB's logic runs counter to EPA's policy on ambient air. In 40 CFR 50.1(e), ambient air includes "that portion of the atmosphere, external to buildings, to which the general public has access." That definition does not account for any time limitation or averaging time. Regardless of whether any member of the public is expected to remain at a particular place for a specific period of time, ambient air is defined in terms of public access, not frequency of access, length of stay, age of the person or other limitations. The only exemption in EPA policy to compliance with the provisions of ambient air is for the atmosphere over land owned or controlled by the source and to which public access is precluded by a fence or other physical barriers. Since ASARCO does not own the site of the IBWC monitor, it clearly falls within our definition of ambient air.

Furthermore, any monitor can give only an estimate of the actual maximum concentration of a pollutant in the vicinity of the monitor. There may actually be higher concentrations of lead in the area between ASARCO's boundary and the IBWC monitor, such as on the highway that runs between the ASARCO smelter property and the IBWC property. The general public may have more frequent or longer access to this location than to the IBWC property itself. Therefore, the fact that the general public may not be expected to remain at the IBWC site itself continuously for three months is no reason to disallow the use of the monitor's data for developing a control strategy.

UNITED STATES ENVIRONMENTAL PROTECTION AGENCY
WASHINGTON, D.C. 20460

JUN 11 1984

OFFICE OF
AIR AND RADIATION

MEMORANDUM

SUBJECT: Applicability of PSD Increments to Building Rooftops

FROM: Joseph A. Cannon
Assistant Administrator
for Air and Radiation

TO: Charles R. Jeter
Regional Administrator, Region IV

The following is in response to your letter of November 10, 1983, concerning issues which you felt required review for national consistency relating to a new source review for an Alabama Power facility in downtown Birmingham, Alabama.

On September 29, 1983, your office informed the State of Alabama that a new source's compliance with the PSD increments must be measured on the tops of buildings, as well as at ground level. Since then we have discussed the question extensively among ourselves and with representatives of the State of Alabama and the company. For the reasons that follow, I do not believe we are in a position to definitively assert that PSD increments apply to rooftops without further information as to the consequences for the PSD system as a whole. Accordingly, I recommend that we inform Alabama that we do not now require that compliance with PSD increments be measured at the tops of buildings. A State may, of course, adopt such an approach if it so desires.

Between 1970 and 1983, it appears to have been general EPA practice to determine compliance with both NAAQS and PSD increments at ground level, not at roof level. On March 18, 1983, however, Kathleen Bennett, in a letter to the State of New York, determined that the "national ambient air quality standards are designed to protect the public health and welfare and apply to all ambient air which does include the rooftops and balconies of buildings accessible by the public."

I believe this conclusion was correct. Apartment balconies, rooftop restaurants, and the like present a potential for human exposure that the primary ambient air quality standards should be interpreted to address.

Given this conclusion, one could argue, based on the text of the relevant regulations and the Clean Air Act, that the PSD increments apply wherever the NAAQS apply, and that both must apply throughout the "ambient air." However, the PSD system, unlike the NAAQS system, does not aim at achieving one single goal. Rather it represents a balance struck first by Congress between a given level of protection against degradation and a given potential for economic growth. It appears that the calculations on which that balancing judgment was based all assumed that PSD increments would be measured at ground level.

A number of state officials who are now administering PSD have argued to me that by measuring PSD increments on rooftops as well as at ground level, EPA would make the PSD system appreciably more stringent than Congress contemplated. Although major urban areas are all Class II areas, this approach, it is argued, could result in constraints on growth comparable to those that apply in Class I areas - national parks and wilderness areas. Such an outcome would not, it is argued, be consistent with Congressional intent.

In these circumstances, I think that preserving the status quo is particularly advisable because:

- It is likely that Alabama did not contemplate adopting a "rooftops" approach to PSD when it took over the PSD program. That expectation, though not decisive, does provide some reason not to change the situation without formal rulemaking.

- The consequences of an erroneous decision to consider increment consumption on rooftops will be more severe than those of an erroneous decision not to consider them. The adoption of such an approach will present at least a procedural, and, probably a substantive obstacle to development in urban areas, while in its absence air quality will still be protected by the NAAQS, by the PSD increments applied at ground level, and by the other aspects of PSD review such as Best Available Control Technology.

Therefore, I have concluded that since the State of Alabama has authority under an approved implementation plan for administering the PSD program within Alabama, it is their responsibility to apply this principle of maintaining the status quo to this case, taking all the relevant facts into account.

Please advise the State of Alabama of the Agency's position on these points as our response to the issues which they raised in meetings with both of us.

cc: A. Alm
P. Angell
T. Devine
G. Emison
W. Pedersen
P. Wyckoff
S. Meiburg

UNITED STATES ENVIRONMENTAL PROTECTION AGENCY
Office of Air Quality Planning and Standards
Research Triangle Park, North Carolina 27711

January 2, 1985

MEMORANDUM

SUBJECT: Regional Implementation of Modeling Guidance

FROM: Joseph A. Tikvart, Chief
Source Receptor Analysis Branch, MDAD (MD-14)

TO: Regional Modeling Contact, Regions I-X

Attached for your use is information on the implementation of modeling guidance. Attachment 1 is an excerpt of a memorandum from J. Wilburn to D. Tyler (dated November 13, 1984) which identifies several issues. Attachment 2 provides our response to these issues.

It is our intent that the response merely reiterate the way in which we understand modeling guidance to be routinely implemented by all Regional Offices. However, having formalized that understanding, we believe that its circulation is desirable. If you have any questions, please call me.

Attachments

cc: Chief, Air Programs Branch, Regions, I-X
B. Turner
✓ D. Wilson

Attachment 1

(Excerpt of Memorandum from J. Wilburn to D. Tyler, Dated November 13, 1984)

As discussed in this memo, we are quite concerned as to our credibility regarding the development and approval of SIP revisions and bubbles which consider complicated and involved modeling. While our Armco experience may be viewed by some as atypical, we feel that the problem is real enough to the point that we request guidance on the following three questions:

1. When do changes in EPA modeling procedures become official Agency policy? Do such forms as informal modeling protocols and consensus opinions developed at meteorologist meetings and workshops constitute official Agency policy? If so, how is management at the regional division and branch level informed of those decisions (i.e., are such decisions communicated by policy memorandum or must regional management be dependent upon regional participants at such meetings and workshops to accurately convey OAQPS's policy decisions)?

2. How do changes in Agency modeling policy affect in progress modeling analyses? Do policy changes in modeling procedures invalidate modeling protocols which accurately reflected modeling policy at the initiation of ongoing modeling analyses? If so, we would appreciate copies of all policy memorandums which communicated such policies.

3. Will it be necessary in order for Armco's bubble application to be concurred with by OAQPS, for Region IV to require Armco to submit a fourth revision to their modeling procedures which would provide an analysis of the 46 days with more than 6 hours of calm which have thus far been deleted for the submittal pursuant to the original protocol? If so, we would like an explanation of the rationale for this requirement in light of our discussion in this memo.

Attachment 2

(Excerpt of Memorandum from R. Rhoads to J. Wilburn, Dated December 24, 1984)

Regarding your first question: Changes in EPA modeling procedures become official Agency guidance when (1) they are published as regulations or guidelines, (2) they are formally transmitted as guidance to Regional Office managers, (3) they are formally transmitted to Regional Modeling Contacts as the result of a Regional consensus on technical issues, or (4) they are a result of decisions by the Model Clearinghouse that effectively set a national precedent. In the last case, such issues and decisions are routinely forwarded to all of the Regional Modeling Contacts. In order for this system to work, the Regional Modeling Contacts must be actively involved in all Regional modeling issues and they must be consulted on modeling guidance as necessary by other Regional personnel.

Regarding your second question: The time at which changes in modeling guidance affect on-going modeling analyses is a function of the type of agreement under which those analyses are being conducted. On-going analyses should normally be "grandfathered" if (1) there is a written protocol with a legal or regulatory basis (such as the Lovett Power Plant) or (2) the analysis is complete and regulatory action is imminent or underway. If the analysis is based on a less formal agreement and is underway, the Regional Office should inform the source operators of the change and determine whether the change can be implemented without serious disruption to the analysis. If for some reason any previous analysis must be redone, then it should be redone in accordance with current modeling guidance. In any event, consequences of failing to implement current guidance should be discussed with the OAQPS staff (Helms/Tikvart) to ensure that inappropriate commitments are not made by the Regional Office.

Regarding your third question: As previously discussed with your staff, the recent Armco modeling analysis is technically inadequate and not approvable so long as the approximately 46 days with calms are ignored. At the time the original protocol was developed, the deletion of calms was common practice because we had no consensus on technically valid procedures for addressing calms. However, (largely due to the assistance of RO IV staff in developing a technical solution to the calms issue) this practice was discontinued by consensus of the Regional Modeling Contacts who recommended immediate implementation of the new procedures (see Joe Tikvart's June 13, 1983, memo to Regional Modeling Contacts). The subsequent Armco analysis which ignored calms was, therefore, deficient since there is no rationale for "grandfathering" an analysis which was initiated after the new calms guidance was disseminated. This issue is no longer an issue since Armco has already submitted a reanalysis that addresses the calms issue.

UNITED STATES ENVIRONMENTAL PROTECTION AGENCY
REGION V

DATE: MAY 16 1985

SUBJECT: Ambient Air

FROM: Michael Koerber for
Regional Meteorologists, Regions I-X

TO: Joseph Tikvart, Chief (MD-14)
Source Receptor Analysis Branch

At the recent Regional Meteorologists' meeting in Dallas, we identified inconsistencies among the Regional Offices on what areas are to be considered as ambient air for regulatory purposes. The existing inconsistency on ambient air is due to both the lack of clear National guidance and the allowed Regional Office discretion. A standardized approach is necessary both to satisfy the consistency requirements of Section 301 of the Clean Air Act and in order for those responsible for Regional modeling activities to provide effective and efficient review of and guidance on modeling analyses. Accordingly, the Regional Meteorologists have decided to address the problem at the working level through the use of a consistent modeling approach.

40 CFR Part 50.1(e) defines ambient air as "... that portion of the atmosphere, external to buildings, to which the general public has access." A letter dated December 19, 1980, from Douglas Costle to Senator Jennings Randolph, clarified this definition by stating that the exemption from ambient air is available only for the atmosphere over land owned or controlled by the source and to which public access is precluded by a fence or other physical barriers." The codified definition plus the 1980 clarification essentially constitute the National policy on ambient air.

The Regional Meteorologists propose that for modeling purposes the air everywhere outside of contiguous plant property to which public access is precluded by a fence or other effective physical barrier should be considered in locating receptors. Specifically, for stationary source modeling, receptors should be placed anywhere outside inaccessible plant property. For example, receptors should be included over bodies of water, over unfenced plant property, on buildings, over roadways, and over property owned by other sources. For mobile source modeling (i.e., CO modeling), receptors should continue to be sited in accordance with Volume 9 of the "Guidelines for Air Quality Maintenance Planning".

Unless you disagree with our position, we will require new actions with modeling analyses submitted to EPA after January 1, 1986, to conform to this modeling policy. Please note that all 10 Regional Meteorologists have reviewed and concur with this memo.

...meteorologists, Regions I-X

federal register

Monday
July 8, 1985

Part II

Environmental Protection Agency

40 CFR Part 51
Stack Height Regulation; Final Rule

ENVIRONMENTAL PROTECTION AGENCY

40 CFR Part 51

[AD-FRL-2847-6]

Stack Height Regulation

AGENCY: Environmental Protection Agency (EPA).

ACTION: Final rulemaking

SUMMARY: Section 123 of the Clean Air Act as amended, requires EPA to promulgate regulations to ensure that the degree of emission limitation required for the control of any air pollutant under an applicable State implementation plan (SIP) is not affected by that portion of any stack height which exceeds good engineering practice (GEP) or by any other dispersion technique. A regulation implementing section 123 was promulgated on February 8, 1982, at 47 FR 5864. Revisions to the regulation were proposed on November 9, 1984, at 49 FR 44878. Today's action incorporates changes to the proposal and adopts this regulation in final form.

EFFECTIVE DATE: This regulation becomes effective on August 7, 1985.

FOR FURTHER INFORMATION CONTACT: Eric O. Ginsburg, MD-15, Office of Air Quality Planning and Standards, EPA, Research Triangle Park, North Carolina 27711, Telephone (919) 541-5540.

SUPPLEMENTARY INFORMATION:

Docket Statement

Pertinent information concerning this regulation is included in Docket Number A-83-49. The docket is open for public inspection between the hours of 8:00 a.m. and 4:00 p.m., Monday through Friday, at the EPA Central Docket Section, West Tower Lobby, Gallery One, 401 M Street, SW., Washington, D.C. Background documents normally available to the public, such as Federal Register notices and Congressional reports, are not included in the docket. A reasonable fee may be charged for copying documents.

Background

Statute

Section 123, which was added to the Clean Air Act by the 1977 Amendments, regulates the manner in which techniques for disperson of pollutants from a source may be considered in setting emission limitations. Specifically, section 123 requires that the degree of emission limitation shall not be affected by that portion of a stack which exceeds GEP or by "any other dispersion technique." It defines GEP, with respect to stack heights as:

> the height necessary to insure that emissions from the stack do not result in excessive concentrations of any air pollutant in the immediate vicinity of the source as a result of atmospheric downwash, eddies or wakes which may be created by the source itself, nearby structures or nearby terrain obstacles . . . [Section 123(c)]

Section 123 further provides that GEP stack height shall not exceed two and one-half times the height of the source (2.5H) unless a demonstration is performed showing that a higher stack is needed to avoid "excessive concentrations." As the legislative history of section 123 makes clear, this reference to a two and one-half times test reflects the established practice of using a formula for determining the GEP stack height needed to avoid excessive downwash. Finally, section 123 provides that the Administrator shall regulate only stack height credits—that is, the portion of the stack height used in calculating an emission limitation—rather than actual stack heights.

With respect to "other dispersion techniques" for which emission limitation credit is restricted, the statute is less specific. It states only that the term shall include intermittent and supplemental control systems (ICS, SCS), but otherwise leaves the definition of that term to the discretion of the Administrator.

Thus the statute delegates to the Administrator the responsibility for defining key phrases, including "excessive concentrations" and "nearby," with respect to both structures and terrain obstacles, and "other dispersion techniques." The Administrator must also define the requirements of an adequate demonstration justifying stack height credits in excess of the 2.5H formula.

Rulemaking and Litigation

On February 8, 1982 (47 FR 5864), EPA promulgated final regulations limiting stack height credits and other dispersion techniques. Information concerning the development of the regulation was included in Docket Number A-79-01 and is available for inspection at the EPA Central Docket Section. This regulation was challenged in the U.S. Court of Appeals for the D.C. Circuit by the Sierra Club Legal Defense Fund, Inc., the Natural Resources Defense Council, Inc.; and the Commonwealth of Pennsylvania in *Sierra Club* v. *EPA*, 719 F. 2d 436. On October 11, 1983, the court issued its decision ordering EPA to reconsider portions of the stack height regulation, reversing certain portions and upholding other portions. Further discussion of the court decision is provided later in this notice.

Administrative Proceedings Subsequent to the Court Decision

On December 19, 1983, EPA held a public meeting to take comments to assist the Agency in implementing the mandate of the court. This meeting was announced in the Federal Register on December 8, 1983, at 48 FR 54999. Comments received by EPA are included in Docket Number A-83-49. On February 28, 1984, the electric power industry filed a petition for a writ of certiorari with the U.S. Supreme Court. While the petition was pending before the court, the mandate from the U.S. Court of Appeals was stayed. On July 2, 1984, the Supreme Court denied the petition (104 S.Ct. 3571), and on July 18, 1984, the Court of Appeals' mandate was formally issued, implementing the court's decision and requiring EPA to promulgate revisions to the stack height regulations within 6 months. The promulgation deadline was ultimately extended to June 27, 1985, in order to provide additional opportunities for public comment, to allow EPA to hold a public hearing on January 8, 1985, and to provide additional time for EPA to complete its analysis of rulemaking alternatives.

Documents

In conjunction with the 1982 regulation and this revision, EPA developed several technical and guidance documents. These served as background information for the regulation, and are included in Dockets A-79-01 and A-83-49. The following documents have been or will be placed in the National Technical Information Service (NTIS) system and may be obtained by contacting NTIS at 5285 Port Royal Road, Springfield, Virginia 22161.

(1) "Guideline for Use of Fluid Modeling to Determine Good Engineering Stack Height," July 1981, EPA, Office of Air Quality Planning and Standards, EPA-450/4-81-003 (NTIS PB82 145327).

(2) "Guideline for Fluid Modeling of Atmospheric Diffusion," April 1981, EPA, Environmental Sciences Research Laboratory, EPA-600/8-81-009 (NTIS PB81 201410).

(3) "Guidance for Determination of Good Engineering Practice Stack Height (Technical Support Document for the Stack Height Regulation)," June 1985, EPA, Office of Air Quality Planning and Standards, EPA-450/4-80-023R.

(4) "Determination of Good Engineering Practice Stack Height—A

Fluid Model Demonstration Study for a Power Plant." April 1983. EPA. Environmental Sciences Research Laboratory. EPA-600/3-83-024 (NTIS PB83 207407).

(5) "Fluid Modeling Demonstration of Good-Engineering-Practice Stack Height in Complex Terrain." April 1985. EPA Atmospheric Sciences Research Laboratory. EPA/600/3-85/022 (NTIS PB85 203107).

In addition, the following documents are available in Docket A-83-49.

"Economic Impact Assessment for Revisions to the EPA Stack Height Regulation." June 1985.

"Effect of Terrain-Induced Downwash on Determination of Good-Engineering-Practice Stack Height." July 1984.

Program Overview

General

The problem of air pollution can be approached in either of two ways: through reliance on a technology-based program that mandates specific control requirements (either control equipment or control efficiencies) irrespective of ambient pollutant concentrations, or through an air quality based system that relies on ambient air quality levels to determine the allowable rates of emissions. The Clean Air Act incorporates both approaches, but the SIP program under section 110 uses an air quality-based approach to establish emission limitations for sources. Implicitly, this approach acknowledges and is based on the normal dispersion of pollutants from their points of origin into the atmosphere prior to measurements of ambient concentrations at ground level.

There are two general methods for preventing violations of the national ambient air quality standards (NAAQS) and prevention of significant deterioration (PSD) increments. Continuous emission controls reduce on a continuous basis the quantity, rate, or concentrations of pollutants released into the atmosphere from a source. In contrast, dispersion techniques rely on the dispersive effects of the atmosphere to carry pollutant emissions away from the source in order to prevent high concentrations of pollutants near the source. Section 123 of the Clean Air Act limits the use of dispersion techniques by pollution sources to meet the NAAQS or PSD increments.

Tall stacks, manipulation of exhaust gas parameters, and varying the rate of emissions based on atmospheric conditions (ICS and SCS) are the basic types of dispersion techniques. Tall stacks enhance dispersion by releasing pollutants into the air at elevations high above ground level, thereby providing greater mixing of pollutants into the atmosphere. The result is to dilute the pollutant levels and reduce the concentrations of the pollutant at ground level, without reducing the total amount of pollution released. Manipulation of exhaust gas parameters increases the plume rise from the source to achieve similar results. ICS and SCS vary a source's rate of emissions to take advantage of meteorologic conditions. When conditions favor rapid dispersion, the source emits pollutants at higher rates, and when conditions are adverse, emission rates are reduced. Use of dispersion techniques in lieu of constant emission controls results in additional atmospheric loadings of pollutants and can increase the possibility that pollution will travel long distances before reaching the ground.

Although overreliance on dispersion techniques may produce adverse effects, some use of the dispersive properties of the atmosphere has long been an important factor in air pollution control. For example, some stack height is needed to prevent excessive pollutant concentrations near a source. When wind meets an obstacle such as a hill or a building, a turbulent region of downwash, wakes, and eddies is created downwind of the obstacle as the wind passes over and around it. This can force a plume rapidly to the ground, resulting in excessive concentrations of pollutants near the source. As discussed previously, section 123 recognizes these phenomena and responds by allowing calculation of emission limitations with explicit consideration of that portion of a source's stack that is needed to ensure that excessive concentrations due to downwash will not be created near the source. This height is called GEP stack height.

Summary of the Court Decision

Petitions for review of EPA's 1982 regulation were filed in the D.C. Circuit within the statutory time period following promulgation of the regulation. On October 11, 1983, the court issued its decision ordering EPA to reconsider portions of the stack height regulation, reversing certain portions and upholding others. The following is a summary of the court decision.

The EPA's 1982 rule provided three ways to determine GEP stack height. One way was to calculate the height by using a formula based on the dimensions of nearby structures. The other two were a *de minimis* height of 65 meters, and the height determined by a fluid modeling demonstration or field study. The court endorsed the formula as a starting point to determine GEP height. However, it held that EPA has not demonstrated that the formula was an accurate predictor of the stack height needed to avoid "excessive concentrations of pollutants due to downwash. Accordingly, the court directed EPA to re-examine in three ways the conditions under which exceptions to the general rule of formula reliance could be justified.

First, the 1982 rule allowed a source to justify raising its stack above formula height by showing a 40-percent increase in concentrations due to downwash, wakes, or eddies, on the ground that this was the percentage increase that the formula avoided. The court found this justification insufficient, and remanded the definition to EPA with instructions to make it directly responsive to health and welfare considerations.

Similarly, the 1982 rule allowed a source that built a stack to less than formula height to raise it to formula height automatically. Once again, the court required more justification that such a step was needed to avoid adverse health or welfare effects.

Finally, the court directed EPA either to allow the authorities administering the stack height regulations to require modeling by sources in other cases as a check on possible error in the formula or explain why the accuracy of the formula made such a step unnecessary.

The 1982 rule provided two formulae to calculate GEP stack height. For sources constructed on or before January 12, 1979, the date of initial proposal of the stack height regulations, the applicable formula was 2.5 times the height of the source or other nearby structure. For sources constructed after that date, the rule specified a newer, refined formula, the height of the source or other nearby structure plus 1.5 times the height or width of that structure, whichever is less ($H+1.5L$). The EPA based its decision to include two formulae on the unfairness of applying the new formula retroactively. In its examination of this issue, the court specified four factors that influence whether an agency has a duty to apply a rule retroactively. They are:

1. Whether the new rule represents an abrupt departure from well established practice or merely attempts to fill a void in an unsettled area of law.

2. The extent to which the party against whom the new rule is applied relied on the former rule.

3. The degree of burden which a retroactive order imposes on a party, and

4. The statutory interest in applying a new rule despite the reliance of a party on the old standard.

719 F.2d at 467 (citations omitted). Applying this analysis to the two formulae, the court upheld EPA's basic decision.

However, the court also held that sources constructed on or before January 12, 1979, should not be automatically entitled to full credit calculated under the 2.5H formula unless they could demonstrate reliance on that formula. The court remanded this provision for revision to take actual reliance on the 2.5H formula into account.

The statute limits stack height credit to that needed to avoid excessive concentrations due to downwash caused by "nearby" structures or terrain features. The 1982 regulation defined "nearby" for GEP formula applications as five times the lesser of either the height or projected width of the structure causing downwash, not to exceed one-half mile. No such distance limitation was placed on structures or terrain features whose effects were being considered in fluid modeling demonstrations or field studies. The court held that section 123 explicitly applies the "nearby" limitation to demonstrations and studies as well as formula applications, and remanded the rule to EPA to apply the limitation in both contexts.

The 1982 rule defined "dispersion techniques" as those techniques which attempt to affect pollutant concentrations by using that portion of a stack exceeding GEP, by varying emission rates according to atmospheric conditions or pollutant concentrations, or by the addition of a fan or reheater to obtain a less stringent emission limitation. The court found this definition too narrow because any technique "significantly motivated by an intent to gain emissions credit for greater dispersion" should be barred. 719 F.2d 462. As a result, the court directed EPA to develop rules disallowing credit for all such dispersion techniques unless the Agency adequately justified exceptions on the basis of administrative necessity or a *de minimis* result.

The GEP formulae established in the 1982 rule do not consider plume rise, on the ground that plume rise is not significant under downwash conditions. In its review of this provision, the court affirmed this judgment by EPA.

The 1982 rule addressed pollutant concentrations estimated to occur when a plume impacts elevated terrain by allowing credit for stack height necessary to avoid air quality violations in such cases. However, the court ruled that section 123 did not allow EPA to grant credit for plume impaction in setting emission limits, and reversed this part of the regulation.

The preamble to the 1982 regulation provided a 22 month process for State implementation of the regulation. The court found this period to be contrary to section 406(d)(2) of the Clean Air Act and reversed it.

The regulation, following the statute, excluded stacks "in existence" on or before December 31, 1970, from the GEP requirements. However, the regulation did not prohibit sources constructed after December 31, 1970, from receiving credit for tying into pre-1971 stacks. Although the court upheld EPA's definition of "in existence," it noted that EPA had failed to address the tie-in issue. Accordingly, the court remanded this issue to EPA for justification.

One other provision of the regulation was challenged in the *Sierra Club* suit. The exclusion of flares from the definition of "stack." In its review of this provision, the court held that EPA had acted properly.

Other provisions of the stack height regulation, such as the *de minimis* stack height established under § 51.1(ii)(1), were not challenged in the suit and thus remain in effect.

Summary of the November 9, 1984, Notice of Proposed Rulemaking

In the November 9, 1984, notice responding to the court decision, EPA proposed to redefine a number of specific terms, including "excessive concentrations," "dispersion techniques," "nearby," and other important concepts, and proposed to modify some of the bases for determining GEP stack height. The following is a summary of the revisions that were proposed.

Excessive Concentrations

The Court of Appeals held that EPA erred in defining "excessive concentrations" due to downwash, for purposes of justifying a stack greater than formula height, as nothing more than a 40-percent increase in pollutant concentrations over what would occur in the absence of downwash. It remanded this issue to EPA to relate the definition to some absolute level of air pollution that could be interpreted to endanger health and welfare, and thus to be "excessive."

The EPA proposed two alternative approaches to defining "excessive concentrations." First, EPA requested comment on whether the 40-percent approach adopted as part of the 1982 regulations in fact protects against the dangers to health and welfare envisioned by Congress when it enacted section 123. In the event that such a showing could not be made, EPA proposed a two-part definition of excessive concentrations, requiring that the downwash, wakes, or eddies induced by nearby structures or terrain features result in increases in ground-level pollutant concentrations that:

(a) Cause or contribute to an exceedance of a NAAQS or applicable PSD increment, and

(b) Are at least 40 percent in excess of concentrations projected to occur in the absence of such structures or terrain features.

Definition of GEP Stack Height

EPA proposed to find that the traditional (2.5H) and refined (H+1.5L) formulae remained proper methods for calculating GEP stack height except EPA proposed to revise its regulation to allow EPA, the State or local air pollution control agency discretion to require a further demonstration using a field study or fluid model to demonstrate GEP stack height for a source in a case where it was believed that the formula may not reliably predict GEP height. In the case of structures that are porous or aerodynamically smoother than block-shaped structures, it would require a source to demonstrate the downwash effects of such structures using a field study or fluid model before receiving credit for stack height based on the structures. EPA also proposed generally to allow sources to raise existing stacks up to formula GEP height without further demonstrations with the exception noted above for discretionary modeling.

Reliance on the 2.5H Formula

In its 1982 rules, EPA allowed sources built before January 12, 1979, the date on which it proposed the refined H+1.5L formulae, to calculate their emission limits based on the traditional 2.5H formula that existed previously. The court approved this distinction, but ruled that it should be limited to sources that "relied" on the traditional formula, suggesting, for example, that sources that had claimed credit for stacks far taller than the formula provided could not be said to have "relied" on it.

In response to the court decision, EPA proposed to revise its regulation to require that for stacks in existence on January 12, 1979, sources demonstrate that they actually relied on the 2.5H formula in the design of their stacks before receiving credit for that height in setting their emission limitations. In the proposal, EPA requested comment on what it should consider an acceptable evidence of such reliance.

Definition of "Nearby"

In its 1982 rules, EPA allowed sources that modeled the effects of terrain obstacles on downwash to include any terrain features in their model without limiting their distance from the stack. The court, though persuaded that this was a sensible approach, since it allowed the model to best approximate reality, ruled that Congress had intended a different result, namely that terrain features beyond ½ mile from the stack should not be included in the model.

In response, EPA proposed to revise § 51.1(ii)(3) of its regulation to limit the consideration of downwash, wakes, and eddy effects of structures and terrain features to those features classified as being "nearby" as defined in § 51.1(jj). Under this proposal, structures and terrain features would be considered to be "nearby" if they occur within a distance of not more than 0.8 km (½ mile); terrain features that extend beyond 0.8 km could be considered if, at a distance of 0.8 km, they achieved a height greater than or equal to 40-percent of the GEP stack height calculated by applying the GEP formula to actual nearby structures. In other words, a terrain feature would be said to "begin" within ½ mile if it reached at least the height of nearby buildings within that distance. Such features could be considered only out to a distance equal to 10 times the maximum height of the feature, not to exceed 2 miles.

The EPA proposed two options for distinguishing between sources constructed before and after the date of promulgation of these revisions. The first option would treat both categories of sources the same. The second option would limit the consideration of terrain for new sources to only those portions of terrain features that fall *entirely* within 0.8 km, thereby removing the possibility of including features extending beyond ½ mile.

Finally, EPA proposed three alternatives for conducting fluid modeling to evaluate the downwash effects of nearby terrain features. These alternatives described various ways of limiting terrain in the model beyond the proposed distance limitations.

To establish a baseline for comparison, two alternatives would initially model the stack on a flat plane with no structure or terrain influences. To analyze downwash effects, the first approach would then insert nearby terrain, with all terrain beyond the distance limit "cut off" horizontally. The second approach would gradually smooth and slope the terrain beyond the distance limit, down to the elevation of the base of the stack.

The third approach would proceed in a somewhat different manner. A baseline would be established by modeling all terrain beyond the distance limit, smoothing and sloping nearby terrain to minimize its influence. To analyze downwash effects, the nearby terrain would then be inserted into the model and the difference in effect measured to determine appropriate downwash credit for stack height.

Definition of "Dispersion Techniques"

In the 1982 rules, EPA identified two practices, in addition to stacks above GEP and ICS/SCS, as having no purpose other than to obtain a less stringent emission limitation. In so doing, it allowed credit for any other practice that had the result of increasing dispersion. The court concluded that Congress had intended, at a minimum, to forbid any dispersion enhancement practice that was significantly motivated by an intent to obtain additional credit for greater dispersion, and remanded the question to EPA for reexamination.

The EPA proposed to revise its definition of "dispersion techniques" generally to include, in addition to ICS, SCS, and stack heights in excess of GEP, any techniques that have the effect of enhancing exhaust gas plume rise. Combining several existing stacks into one new stack can have such an effect. However, such combinations also often have independent economic and engineering justification. Accordingly, EPA requested comment on defining the circumstances under which the combining of gas streams should not be considered a dispersion technique, and proposed to allow sources to take credit in emission limitations for such merging where a facility was originally designed and constructed with merged gas streams or where the merging occurs with the installation of additional controls yielding a net reduction in total emissions of the affected pollutant. The EPA retained exclusions from its definition of prohibited dispersion techniques for smoke management in agricultural and silvicultural prescribed burning programs and also proposed to exclude episodic restrictions on residential woodburning and debris burning.

New Sources Tied into Pre-1971 Stacks

Section 123 exempts stacks "in existence" at the end of 1970 from its requirements. EPA's general approach to implementing this language was upheld by the court. However, in its 1982 rule EPA had also allowed this credit to sources built after that date that had tied into stacks built before that date. EPA failed to respond to comments objecting to this allowance, and so the court remanded the question to EPA for the agency to address.

Upon reexamination, EPA saw no convincing justification for granting credit to these sources. Consequently, for sources constructed after December 31, 1970, with emissions ducted into grandfathered stacks of greater than GEP height and for sources constructed before that date but for which major modifications or reconstruction have been carried out subsequently, EPA proposed to limit stack height credit to only so much of the actual stack height as conforms to GEP. Sources constructed prior to December 31, 1970, for which modifications are carried out that are not classified as "major" under 40 CFR 51.18(j)(i), 51.24(6)(2)(i), and 51.21(6)(2)(i) would be allowed to retain full credit for their existing stack heights.

Plume Impaction

In its 1982 rules, EPA allowed stack height credit for "plume impaction," a phenomenon that is distinct from downwash, wakes and eddies. The court, though sympathetic to EPA's policy position, reversed this judgment as beyond the scope of the statute. Accordingly, EPA proposed to delete the allowance of plume impaction credit from its regulation in compliance with the court decision. However, EPA also recognized that sources in complex terrain face additional analytical difficulties when attempting to conduct modeling to determine appropriate emission limitations. Consequently, EPA requested comment on whether any allowance should be made for implementation problems that may result from the application of revised GEP stack height assumptions and, if so, how such allowance should be made.

State Implementation Plan Requirements

EPA's 1982 rules gave states a total of 22 months to revise their rules and to establish source emission limitations based on new stack height credits. The court found this, too, to go beyond the language of the statute. In response, EPA stated in the proposal that States would be required, pursuant to section 406(d)(2)(b) of the Clean Air Act, to review their rules and existing emission limitations, revising them as needed to comply with the new regulation within 9 months of the date of its promulgation.

Response to Public Comments on the November 9, 1984, Proposal

The EPA received over 400 comments during the public comment period and at the public hearing, addressing a number of aspects of the proposed regulation. These comments have been consolidated according to the issues raised and are discussed, along with EPA's responses, in a "Response to Comments" document included in the rulemaking docket. Certain comments can be characterized as "major" in that they address issues that are fundamental to the development of the final regulation. These comments are summarized below, along with EPA's responses. Additional discussion of the issues raised and further responses by EPA can be found in the "Response to Comments" document.

I. Maximum Control of Emissions in Lieu of Dispersion

A central legal and policy question addressed in this rulemaking was raised in the comments of the Natural Resources Defense Council (NRDC) and the Sierra Club. They contend that section 123 requires all sources to install the maximum feasible control technology before receiving any credit for the dispersive effects of a stack of any height, or for other practices that may enhance pollutant dispersion.

The NRDC argument is summarized fully in the Response to Comments document together with EPA's response. Very briefly, NRDC contends that litigation prior to the 1977 Clean Air Act Amendments had established that dispersion can never be used as an alternative to emission control, and that this understanding was carried forward and strengthened in the 1977 Clean Air Act Amendments. Accordingly, no rule that does not require full control of emissions as a prerequisite to any stack height credit would be consistent with Congressional intent.

EPA disagrees. During the 8 years between 1977 and NRDC's comments, a period covering two Administrations and three Administrators, NRDC's position has never been either adopted by EPA or seriously advocated before it. The pre-1977 cases cited by NRDC do not bar all stack credit, but only credit for stacks beyond the historical norm. Finally, the text and legislative history of section 123 contain essentially no support for NRDC's "control first" position.

II. Discussion of Other Major Issues

The EPA's position on the "control first" comments provides the necessary background against which the remaining major issues in this rulemaking are discussed. These issues are: the definition of "excessive concentrations" due to downwash, wakes, and eddies; the definition of "nearby;" and the definition of "dispersion technique." A question that affects several of these decisions, and that is addressed where it arises, concerns the extent to which any changes made in the stack heights regulations should be applied prospectively rather than retroactively.

This discussion of "excessive concentrations" is in turn divided into a discussion of the physical characteristics of downwash, followed by a discussion of the significance of those characteristics as they pertain to the GEP formulae, to stacks above formula height, to stacks being raised to formula height, and to stacks at formula height being modeled at the choice of the administering authorities.

Definition of "Excessive Concentrations"

The Physical Nature of Downwash. A number of commenters, including the Utility Air Regulatory Group (UARG), have argued that the court decision does not obligate EPA to revise the definition adopted in the 1982 regulation, but only directs EPA to ensure that the 40-percent criterion protects against concentrations due to downwash that could be related to health and welfare concerns. They point out that when emissions from a source become trapped in the wake region produced by the source itself or upwind structures and terrain features, those emissions are brought rapidly to earth, with little dilution. This, the commenters argue, can produce short-term peak concentrations at groundlevel that are many times greater that the concentration levels of the NAAQS. Because their duration is relatively short, averaging these concentrations over the times specified by the NAAQS does not result in NAAQS violations. Nonetheless, the commenters argue that these concentrations should be regarded as nuisances that section 123 was specifically enacted to avoid. Accordingly, the commenters held that EPA would be justified in retaining the 40-percent criterion without requiring that such increases result in exceedances of the NAAQS.

These same commenters argued that severe hardships would result if EPA's second proposed definition of "excessive concentrations" is adopted, and that, by limiting stack height credit to that just necessary to avoid exceedance of NAAQS or PSD increments, the definition would act to limit actual stack design and construction in a way that would increase the likelihood of NAAQS or PSD exceedances. This would occur, they argue, because, by building only so tall a stack as they can receive credit for, sources would be eliminating a "margin of safety" that would normally be provided otherwise. Furthermore, it was argued that, due to the changing nature of background air quality, inclusion of absolute concentrations such as the NAAQS or PSD increments in the definition would render determinations of GEP stack height constantly subject to change.

NRDC argued on the other hand that only a violation of air quality standards can be considered the type of "excessive concentration" for which downwash credit can be justified, the EPA had failed to specify the health or welfare significance of the short-term peaks that it might consider as meeting this description, and that in any event UARG's attempt to show that short stacks could cause a large number of short-term peaks was technically flawed in several different ways.

Response. Extensive discussion of the downwash phenomenon, as well as the aerodynamic effects of buildings and terrain features on windflow patterns and turbulence, is contained in the technical and guidance documents previously listed in this notice. To summarize briefly, numerous studies have shown that the region of turbulence created by obstacles to windflow extends to a height of approximately 2.5 times the height of the obstacle. Pollutants emitted into this region can be rapidly brought to the ground, with limited dilution. Though this tendency decreases the higher vertically within the downwash region that the plume is released, because of the highly unpredictable nature of downwash and the lack of extensive quantitative data, it is extremely difficult to reliably predict plume behavior within the downwash region. As noted in the comments submitted, the distinguishing features of downwash do not show up well over an averaging time as long as 1 hour or more. Pollutant concentrations resulting from downwash can arise and subside very quickly as meteorological conditions, including wind speed and atmospheric stability vary. This can result in short-term peaks, lasting up to 2 minutes or so, recurring intermittently for up to several hours, that significantly exceed the concentrations of the 3- and 24-hour NAAQS. Little quantitative information is available on the actual levels of these peaks, or on the frequency of their occurrence since most stacks have been

designed to avoid downwash and because downwash monitoring is not typically conducted.

A number of modeling and monitoring studies in the record assess the significance of downwash when plumes are released into the downwash region. The most important of these are a number of studies cited in the November 9 proposal showing that for sources with sulfur dioxide (SO_2) emission rates of 4 to 5 pounds per million British Thermal Units (lb./mmBTU), stacks releasing the plume into the downwash region can significantly exceed the 3-hour NAAQS.

The utility industry submitted monitoring results from four sites showing that facilities with short stacks (ranging from 23 to 89 percent of formula height) generated many short-term peaks in the vicinity of the plant at concentrations at least 2 times the highest concentration of the 3-hour SO_2 standard, i.e., 1 ppm for up to 10 minutes. Those concentrations are the maximun that could be recorded by the monitors used. There is no way to determine from these data the true peak ground-level concentrations.

The NRDC, in commenting on this subject, has argued that downwash-related concentrations are largely theoretical, since stacks have generally been built to avoid downwash, and that actual concentrations occur under other meteorological conditions such as "inversion breakup fumigations" and "looping plums," that can equal these "theoretical" concentrations predicted under downwash.[1] The NRDC also criticized the utility data on numerous technical grounds.

EPA's studies indicate that, when stacks are significantly less than GEP formula height, high short-term concentrations can indeed occur due to downwash that are in the range of the values reported by the utility industry. Concentrations produced by the other conditions cited by NRDC, though high, may be lower by an order of magnitude, and occur less frequently by as much as two orders of magnitude, than those produced by downwash.[2] As stack height approaches the height determined by the GEP formula, the expected frequency and severity of short-term peaks due to downwash becomes less certain. This is to be expected, since it is the purpose of a formula height stack to avoid excessive downwash. While it might theoretically be possible for EPA to revise the GEP formula downward (e.g., from $H+1.5L$ to $H+1.2L$, or some other value), such a revision would have little purpose. By moving the release point further into the downwash region, such a change would increase the probability of high downwash-caused peaks. On the other hand, such relatively small changes in stack height are not likely to appreciably affect the emission limitation for the source. This is because emission limitations are calculated based on physical stack height and associated plume rise under atmospheric conditions judged most controling for the source. Increasing or decreasing stack height by a small fraction will not greatly change the rate or extent of dispersion and thus will not affect the ground-level concentration. Moreover, as EPA noted in its November 9 proposal, no data presently exist on which to base a revision to the formula.

The NRDC submitted data to EPA which it believed to support the conclusions that it urged EPA to adopt concerning short-term peak concentrations under other meterological conditions.[3] However, these data were not presented in a form that could be readily interpreted, and EPA has thus far been unable to draw any conclusions from them.[4]

In reviewing NRDC's comments on building downwash, EPA agrees that there is great uncertainty about our present understanding of this phenomenon, and this is supported by the range and variation of downwash effects observed in recent studies. However, no information has been presented which would convince EPA to abandon the present GEP formulae in favor of any alternative.

The health and welfare significance of downwash concentrations that result in violations of the ambient standards are documented and acknowledged in the standards themselves. The significance of short-term peaks at the levels that EPA's analyses predict is more judgmental. However, a number of studies cited in EPA's "Review of the National Ambient Air Quality Standards for Sulfur Oxides: Assessment of Scientific and Technical Information (EPA-450/5-82-007, November 19 indicate that concentrations of or sustained for durations of 5 minutes more can produce bronchoconstricti in asthmatics accompanied by symptoms such as wheezing and coughing. Such concentrations are w within the range of concentrations th can result from downwash. When sources meet the ambient standards, frequency of occurrence for these concentrations under the other conditions cited by NRDC is substantially lower than for downwa when stacks are less than GEP.

GEP Formula Stack Height. Some commenters, including NRDC, stated that EPA cannot justify retention of t traditional (2.5H) and refined ($H+1.5$ GEP formulae based simply on their relationship to the 40-percent criterio and argued that the formulae provide too much credit in many or most case This, they argue, results in allowing sources to obtain unjustifiably lenient emission limitations.

Other commenters argued that Congress explicitly reaffirmed the traditional GEP formula, and that EPA should allow maximum reliance on it (and, by implication, on the refined formula that was subsequently der from it).

Response. The use of EPA's refined formula as a starting point for determining GEP was not called into question by any litigant in the *Sierra Club* case. The court's opinion likewis does not question the use of the formu as a starting point. A detailed discussi of the court's treatment of the formula, showing how it endorsed the formula's presumptive validity, is contained in t Response to Comments document.

Despite this limited endorsement, EP might need to revisit the formula on its own if its reexamination of the "excessive concentration" and modelin issues indicated that the formula clearl and typically misstated the degree of stack height needed to avoid downwas concentrations that cause health or welfare concerns.

However, no such result has emerge from our reexamination. Stacks below formula height are associated with downwash-related violations of the air quality standards themselves where emission rates significantly exceed the levels specified by NSPS. Even where emissions are low, downwash conditions at stacks below formula height can be expected, unlike other conditions, to generate numerous sh term peaks of air pollution at high le

---

[1] In "inversion breakup fumigation," an inversion layer dissipates due to heating of the ground, letting the pollutants that were trapped in it descend suddenly to ground level. In "looping plumes," a plume is brought down to the ground close to the source in the form of intermittent puffs under very unstable atmospheric conditions.

[2] "Comments on Peak Ground-Level Concentrations Due to Building Downwash Relative to Peak Concentrations Under Atmospheric Dispersion Processes." Alan H. Huber and Francis Pooler, Jr. June 10, 1985.

[3] Memorandum from David C. Hawkins, NRDC, to William F. Pedersen, Jr., Office of General Counsel, USEPA, May 29, 1985.

[4] Memorandum from Alan H. Huber, ASRL, to David Stonefield, OAQPS, June 27, 1985.

that raise a real prospect of local health or welfare impacts.

As EPA stated in the proposal, it is impossible to rely primarily on fluid modeling to implement the stack height regulations, particularly under the timetable established by the court. 49 FR 44883 (November 9, 1984). No commenter other than NRDC even suggested a different formula that in their eyes would be better, and NRDC's suggestions were premised on their "control first" position, which EPA has found inconsistent with the statute and has rejected. EPA considers the refined formula to be the state-of-the-art for determining necessary stack height.

Given the degree of presumptive validity the formula already possesses under the statute and the court opinion, we believe that this record amply supports its reaffirmation.

Stacks Above GEP Formula Height. The EPA's 1976 stack height guidelines [cite] imposed special conditions on stacks above formula height—the installation of control technology—that were not imposed on lower stacks. Similarly, EPA's 1979 proposal had made credit above formula height subject to a vaguely defined "detailed investigation" (38 FR 25700). The legislative history of the 1977 Clean Air Act Amendments cautioned that credit for stacks above formula height should be granted only in rare cases, and the Court of Appeals adopted this as one of the keystones of its opinion. The court also concluded that Congress deliberately adopted very strict requirements for sources locating in hilly terrain.

For these reasons, EPA is requiring sources seeking credit for stacks above formula height and credit for any stack height justified by terrain effects to show by field studies or fluid modeling that this height is needed to avoid a 40-percent increase in concentrations due to downwash and that such an increase would result in exceedance of air quality standards or applicable PSD increments. This will restrict stack height credit in this context to cases where the downwash avoided is at levels specified by regulation or by act of Congress as possessing health or welfare significance.

To conduct a demonstration to show that an absolute air quality concentration such as NAAQS or PSD increment will be exceeded, it is necessary to specify an emission rate for the source in question.[4] The EPA believes that in cases where greater than formula height may be needed to prevent excessive concentrations, sources should first attempt to eliminate such concentrations by reducing their emissions. For this reason EPA is requiring that the emission rate to be met by a source seeking to conduct a demonstration to justify stack height credit above the formula be equivalent to the emission rate prescribed by NSPS applicable to the industrial source category. In doing this, EPA is making the presumption that this limit can be met by all sources seeking to justify stack heights above formula height. Sources may rebut this presumption, establishing an alternative emission limitation, on a case-by-case basis, by demonstrating to the reviewing authority that the NSPS emission limitation may not feasibly be met, given the characteristics of the particular source.[5] For example, it may be possible for a source presently emitting SO_2 at a rate of 1.8 lb./mmBTU to show that meeting the NSPS rate of 1.2 lb./mmBTU would be prohibitive in that it would require scrapping existing scrubber equipment for the purpose of installing higher efficiency scrubbers. Similarly, a source may be able to show that, due to space constraints and plant configuration, it is not possible to install the necessary equipment to meet the NSPS emission rate. In the event that a source believes that downwash will continue to result in excessive concentrations when the source emission rate is consistent with NSPS requirements, additional stack height credit may be justified through fluid modeling at that emission rate.

A source, of course, always remains free to accept the emission rate that is associated with a formula height stack rather than relying on a demonstration under the conditions described here. The third alternative mentioned in the proposal—using the actual emission limit for the source—has been rejected because, to the extent that limit relied on greater than formula height, it would amount to using a tall stack to justify itself.

The EPA's reliance on exceedances, rather than violations of the NAAQS and PSD increments, is deliberate. Fluid modeling demonstrations are extremely complicated to design and carry out, even when the most simple demonstration criteria—that is, a percentage increase in concentrations, with no consideration of absolute values—are assumed. Adding consideration of an absolute concentration such as a NAAQS or PSD increment substantially complicates this effort further and introduces the scientific uncertainties associated with predicting an exceedance of a 3-hour or 24-hour standard based on 1 hour or less of modeling data. Using an hour or less of modeling values, based on one set of meteorological data, to draw the distinction between only one exceedance of the standard during the 8760 hours in a year, and the two or more that constitute a violation pushes that uncertainty beyond reasonable limits. EPA therefore does not find the additional difficulties that would be created by requiring violations instead of exceedances to be warranted. That is particularly so here, given that the regulations require sources seeking credit above the formula to be well-controlled as a condition of obtaining such credit.

Use of an absolute concentration in the test of "excessive concentrations" can lead to problems of administering the program, in that it can have a "zoning" effect. Since a source can only get stack height credit to the extent that it is needed to avoid a PSD increment or NAAQS exceedance, an emissions increase in the area of that source may increase concentrations beyond the controlling limit, thereby making it difficult for new sources to locate in the area, or for sequential construction of additional emitting units at the source in question.

This effect cannot be avoided under any test for "excessive concentrations" that is tied to absolute concentrations. However, that effect will be mitigated by the fact that the use of this approach is voluntary and limited to sources wishing to rely on fluid modeling to justify stack height credit. Moreover, the effects of downwash tend to occur very near the source, usually on fenced company property. Since concentrations measured at such locations are not used to evaluate NAAQS attainment or PSD increment consumption, new sources wishing to locate in the area are less likely to be affected.

Sources planning sequential construction of new emitting units at one location or contemplating future expansion can reduce the uncertainties noted above by initially obtaining permits for the total number of units anticipated and by planning for expansion in the calculation of necessary physical stack height. In the latter instance, only the allowable stack height credit would be revised as

---

[4] In contrast, if the test of "excessive concentrations" involved a simple percentage increase, there would be no need to specify an emission rate, since the increase in concentrations caused by downwash is independent of emission rates.

[5] The EPA will rely on its Best Available Retrofit Technology Guideline in reviewing any rebuttals and alternative emission limitations.

expansion is carried out—not actual stack height.

An additional theoretical complication is presented when an absolute concentration is used where meteorological conditions other than downwash result in the highest predicted ground-level concentrations in the ambient air. In such cases, a source that has established GEP at a particular height, assuming a given emission rate, may predict a NAAQS violation at that stack height and emission rate under some other condition, e.g., atmospheric stability Class 'A.' Reducing the emission rate to eliminate the predicted violation would result in stack height credit greater than absolutely necessary to avoid an excessive concentration under downwash. However, reducing stack height places the source back in jeopardy of a NAAQS violation under the other meteorological condition, and so on. "ratcheting" stack height credit and emission rates lower and lower. The EPA has eliminated this "ratcheting" potential in the GEP guideline by providing that, once GEP is established for a source, adjusting the emission rate to avoid a violation under other conditions does not require recalculation of a new GEP stack height.

EPA is making this part of the regulations retroactive to December 31, 1970. In the terms of the court's retroactivity analysis, stacks greater than formula height represent a situation that Congress did affirmatively "intend to alter" in section 123. Moreover, EPA regulatory pronouncements since 1970 have placed a stricter burden on sources raising stacks above formula height than on others.

No source is precluded from building a stack height greater than formula height if such height is believed to be needed to avoid excessive downwash. However, the design and purpose of section 123 prohibit SIP credit for that effort unless a relatively rigorous showing can be made.

Given the ability of sources to avoid modeling and rely on validity of the GEP formulae and requirement for further control of emissions in conjunction with stack heights in excess of formulae height, the result predicted by UARG—exceedances of the NAAQS or PSD increments due to inadequate stack height—is highly unlikely.

The potential effect of changes in background air quality on stack height credit is not substantially different from the effect that such changes in background can have on source emission limitations in nonattainment areas. In the first case, however, sources may be able to address these effects through greater stack height if such changes affect the concentrations under downwash. Moreover, the possibility that shifting background air quality can yield different calculations of GEP is significantly limited by the fact that consideration of background in GEP calculations is restricted to those cases where credit for greater than formula height is being sought or sources are seeking to raise stacks to avoid excessive concentrations.

Raising Stacks Below Formula Height to Formula Height. In response to EPA's proposal to allow automatic credit for GEP formula height, several commenters have argued that EPA has failed to adequately respond to the court's directive to "reconsider whether, in light of its new understanding of 'excessive concentrations,' demonstrations are necessary before stack heights may be raised, even if the final height will not exceed formula height."

Response. Raising a stack below formula height to formula height is not, in EPA's judgment, subject to the same statutory reservations as building stacks greater than formula height. However, as the court has cautioned, it may still be necessary for these sources to show that raising stacks is necessary to avoid "excessive concentrations" that raise health or welfare concerns.

For these reasons, sources wishing to raise stacks subsequent to October 11, 1983, the date of the D.C. Circuit opinion, must provide evidence that additional height is necessary to avoid downwash-related concentrations raising health and welfare concerns. These rules allow sources to do this in two ways.

The first way is to rebut the presumption that the short stack was built high enough to avoid downwash problems; i.e., to show, by site-specific information such as monitoring data or citizen complaints, that the short stack had in fact caused a local nuisance and must be raised for this reason. The EPA believes that both the historical experience of the industry and the data on short-term peaks discussed earlier show that short stacks can cause local nuisances due to downwash. However, where a source has built a short stack rather than one at formula height, it has created a presumption that this is not the case. General data on short-term peaks may not be strong enough to support, by themselves and in the abstract, a conclusion that the stack must be raised to avoid local adverse effects. Instead, that proposition must be demonstrated for each particular source involved.

In the event that a source cannot make such a showing, the second way to justify raising a stack is to demonstrate by fluid modeling or field study an increase in concentrations due to downwash that is at least 40-percent in excess of concentrations in the absence of such downwash and in excess of the applicable NAAQS or PSD increments. In making this demonstration, the emission rate in existence before the stack is raised must be used.

Since raising stacks to formula height is not subject to the same extraordinary reservations expressed by Congress and the court with respect to stacks being raised above formula height, EPA does not believe that the use of presumptive "well-controlled" emission rate is appropriate here. As discussed in EPA's response to NRDC's "control first" argument, the basic purpose of section 123 was to take sources as it found them and, based on those circumstances, to assure that they did not avoid control requirements through additional dispersion. Use of a source's actual emission rate in this instance is consistent with that basic purpose and, absent special indications of a different intent, should be used in stack height calculations.

The EPA believes that it is most unlikely that any source with a current emission limitation has failed to claim full formula credit for a stack of formula height. Accordingly, the question whether a source can receive stack height credit up to formula height will involve only sources that want to actually raise their physical stack, not sources that simply want to claim more credit for a stack already in existence. A source will presumably not go to the trouble of raising an existing stack without some reason. If a source cannot show that the reason was in fact the desire to avoid a problem caused by downwash, then the inference that it was instead a desire for more dispersion credit is hard to avoid. A nuisance caused by downwashed emissions could include citizen or employee complaints or property damage. A source would be expected to show that complaints of this nature were reasonably widespread before getting credit under this section.

The EPA does not intend to make this rule retroactive to stacks that "commenced construction" on modifications that would raise them to formula height prior to October 11, 1983. Applying the court's retroactivity analysis, it appears:

1. The new rule does depart from prior practice. The EPA's 1979 proposed rule affirmatively encouraged sources with shorter stacks to raise them to formula

height.[7] Though EPA's 1978 guideline can be read as imposing a "control first" requirement on some stack height increases, its general thrust gave automatic credit for all stacks that met the "2.5" times formula.[8] Automatic permission was similarly set forth in the 1979 proposal, in the 1981 reproposal, and in the 1982 final rule. Only a notice published in 1980, but later withdrawn, departs from this trend, requiring the use of field studies or fluid modeling demonstrations to justify stack height increases up to GEP formula height.[9] Even then, the notice would have made this policy prospective in its application.

2. Sources that raised stacks in reliance on this past EPA guidance assuming the availability of dispersion credit cannot be distinguished from the sources, in the example approved by the court, that built stacks to the traditional formula in an identical expectation of dispersion credit.

3. It cannot be said that the raising of stacks to formula height is a practice that Congress "affirmatively sought to end." It is not mentioned in the text of the statute or its legislative history. Further, as the court has already noted, the statute attributes a degree of presumptive validity to the formula on which sources that raise their stacks will have relied.

Discretion to Require Fluid Modeling. Several commenters argued that EPA's proposal to allow agencies to require the use of fluid modeling was unnecessary, since EPA had already documented the validity of the GEP formulae. Furthermore, these commenters argue that this allowance would make fluid modeling the rule, rather than the exception. This would result, the commenters state, because it was their expectation that agencies or environmental groups would nearly always call for fluid modeling demonstrations during the permit application and review process.

Other commenters stated that providing the discretion to require fluid modeling was appropriate, since EPA had failed to demonstrate that the GEP formulae represented the minimum height necessary to avoid excessive concentrations.

Response. The Court of Appeals directed EPA to reexamine whether its rules should allow States, as a matter of discretion, to require even sources that planned to rely on the formula to show instead by fluid modeling that a stack this high was required to avoid dangers to health and welfare caused by downwash. The court suggested that EPA should include such a provision unless it could find that the formula was so accurate, or tended so much to err on the low side, as to make discretionary authority to adjust formula height downward unnecessary.

The EPA believes that the court was mistaken in its conclusion that a stack at formula height is likely to generate downwash concentrations as great as 40 percent only in uncommon situations. In fact, EPA's observations indicate that when stacks are built to GEP formula height, an increase in concentrations due to downwash can still be expected to occur that is between 20 and 80 percent greater than the concentration that would occur in the absence of building influences.[10]

Nevertheless, in response to the court's remand, EPA is including in this final rule a provision for the authority administering these rules to require field studies or fluid modeling demonstrations, even for stacks built to formula height, in cases where it believes that the formula may significantly overstate the appropriate stack height credit.[11]

While EPA believes the formula is a reasonable rule of thumb indicating the stack height needed to avoid some probability of a standards violation and a significantly greater probability of a local nuisance, actual results in any given case may vary somewhat based on specific circumstances. The EPA has attempted to minimize this possibility within the limits of available data by identifying two particular situations in which it believes that the formulae may not be reliable indicators of GEP: Porous structures and buildings whose shapes are aerodynamically smoother than the simple block-shaped structures on which the formulae are based.[12]

However, EPA acknowledges that other situations, of which the Agency is not presently aware, may arise wherein the formulae may not be adequate.

The EPA intends to "grandfather" any source that relied on the formula in building its stack before the date of EPA's 1979 proposal from the effect of this discretionary reexamination requirement.

Only in that proposal did EPA first suggest that such a discretionary reexamination provision might be included in the final rule. The retroactivity analysis set out earlier therefore supports exempting stacks built in reliance on EPA guidance before that date from discretionary reexamination. Indeed, a failure to "grandfather" these sources would lead to the paradoxical result that a source that had built a GEP stack under the traditional EPA formula would have its direct reliance interests protected by the "grandfather" provision previously upheld by the court, but could then lose that "grandfathered" credit through a case-specific demonstration requirement showing that the traditional formula was somewhat inaccurate—the very reason behind the change in the formula properly found non-retroactive by EPA earlier.

Given this background, EPA believes that the effect on emissions of including or of excluding a provision for discretionary determinations from this rule is likely to be very small. Building stacks above formula height, and raising stacks below formula height to formula height, are covered by regulatory provisions already discussed. The only case left for discretionary determinations to address is the building of stacks at formula height in the post-1979 period. However, all major sources built since that time are already controled to SO_2 emission rates no greater than 1.2 lb./mmBTU—and, not uncommonly much less—under various EPA regulations. All new power plants on which construction "commenced" since 1971 must meet EPA's NSPS mandating an emission rate no greater than this level. That standard was tightened for all power plants on which construction "commenced" after 1978. In addition, all "major" sources built since 1977 in areas subject to the Act's PSD requirements have had to install best available control technology. That technology must require the greatest degree of emission control that is achievable considering technology, economics, and energy impacts.[13]

---

[7] "The use of stack height up to the level of good engineering practice is encouraged by EPA in order to avoid local nuisances." (36 FR 24709).

[8] 41 FR 7481 (February 18, 1976); Guideline Sections B.1, C.1(2), C.2(2).

[9] 45 FR 42279 (June 24, 1980); specific discussion of stack height credit is discussed at 42282–3.

[10] Guideline for Determination of Good Engineering Practice Stack Height, pp 20–22. This is further illustrated in Figures 5 and 6.

[11] Quite apart from any such regulatory provision, States have authority to require such demonstrations, on the terms outlined or on stricter or more lenient terms, under the savings provisions of section 116 of the Clean Air Act.

[12] Earlier EPA guidance, although expressing reservations about the accuracy of the formula when applied to rounded structures, allowed its use for certain tapered structures and cooling towers. "Guideline for Determination of Good Engineering Practice Stack Height," July 1988, at 39–48. For this reason, EPA will grandfather any credits for such structures that were granted prior to November 9, 1984. Since EPA guidance has never allowed credit for porous structures, the restriction in this rule for such structures applies to all stacks in existence since December 31, 1970.

[13] Clean Air Act section 169

If such sources had to show that use of a formula height stack was needed to avoid exceedances of the NAAQS or PSD increments, that might prove difficult for many of them. The likelihood of such exceedances tends to decrease as the emission rate for the source decreases. By the same token, the incremental emission reductions available from the sources that are at issue here tend to be small and among the most expensive available. In terms of emission reductions, little is at stake where these sources are concerned.

Accordingly, the rules will require such sources, if a reviewing authority calls for a demonstration, to the rules show that the use of a formula stack height is needed to avoid a 40-percent increase in concentrations due to downwash. This will provide a rough check on whether the formula, as applied in the particular case at issue, produces the result it was designed to produce.

The EPA is not providing here for sources to justify their formula height stacks by arguing that the height in excess of that needed to avoid NAAQS violations is needed to avoid a local nuisance. The discretionary modeling requirement is designed for application to stacks before they were built. Beyond that, there is no way to determine based on the *absence* of a local nuisance that a formula height stack is not too tall, in the way that the *presence* of a nuisance shows that a stack under formula height in fact is too short. Accordingly, there will be no way, as there was with short stacks being raised, to determine from actual experience whether a local nuisance would occur at a shorter stack height. Though avoiding local nuisance is a legitimate purpose for which stacks are built, it would be very difficult to show by modeling what stack height was needed to avoid it.

Some commenters have misunderstood EPA's allowance of discretion to require fluid modeling as requiring such modeling whenever *any* individual or entity called for such a demonstration. This discretion rests explicitly with the reviewing agencies who have always had the prerogative to require more stringent analyses in the SIP process; and no obligation is implied for these agencies to require fluid modeling simply because it has been called for by some individual during the permit review process. It is EPA's expectation that technical decisions to require such additional demonstrations would be based on sound rationale and valid data to show why the formulae may not be adequate in a given situation. In any case, given the burden of reviewing a fluid modeling demonstration, an agency is not likely to exercise this option absent sufficient justification. Consequently, EPA disagrees with the commenters' contention that fluid modeling will supplant the use of the GEP formulae, except in what EPA believes will be unusual instances.

Reliance on the 2.5H Formula. In limiting the applicability of the 2.5H formula to those cases where the formula was actually relied upon, the November 9 proposal defined such reliance in terms of stack design. A number of comments indicated that actual stack design and construction may ultimately be control, not by the 2.5H engineering rule, but by construction materials specifications. Consequently, while 2.5H rule may have provided an initial starting point in stack design, the rule may not have dictated final stack height. In other cases, it was argued that a number of source owners may have constructed their stacks in excess of what was determined to be minimum GEP for precautionary reasons, for process requirements, or in anticipation of additional growth in the area surrounding the facility, even though emission limitations for these sources would have been limited then, as now, to formula height. Consequently, it was argued that EPA should allow sources to demonstrate reliance on the formula in the calculation of emission limits as well as in the design of the stack.

In response to EPA's request for comments on what evidence should be considered acceptable in determining reliance on the 2.5H formula, some commenters urged EPA to consider reconstructed evidence, e.g., affidavits from design engineers or copies of correspondence indicating past reliance on EPA guidance. Other commenters stated that "reliance" should be very strictly construed, that EPA should be circumspect in its review of reliance demonstrations, and that only contemporaneous documentary evidence, such as blueprints and facility design plans, be accepted as evidence.

Response. The EPA is in general agreement with the view that reliance should be considered in relation to the emission limitation for the source, not the design. Since section 123 specifically prohibits EPA from regulating actual stack heights and rather regulates stack height credits used in setting emission limitations, it would be illogical to require that sources demonstrate reliance on the 2.5H formula for actual stack design. Moreover, such an approach would contradict principles of sound planning, in that it would penalize those sources that have built taller stacks in anticipation of facility expansion or other growth in the area that could influence GEP determinations.

If a stack has been built taller than 2.5H formula provides, while the emission limitation has been calculated assuming 2.5H credit, a convincing demonstration has been made that the source properly relied on the formula. Conversely, if the emission limitation for the source is based on some other stack height credit, such as 2.8H, 3.5H or some other number, it would be difficult to show that the GEP formula had in fact been relied on.

In some cases the emission limit information may be unavailable or inconclusive. In such cases, EPA will allow reliance on reconstructed evidence of construction intent.

In comments submitted during the public comment period and in response to questions raised by EPA at the public hearing held on January 8, 1985, industry representatives repeatedly stated that contemporaneous evidence of reliance on the 2.5H formula, such as facility design plans, dated engineering calculations, or decision records are rarely, if ever, retained for more than a few years after construction of the facility is completed. Consequently, they argued that most cases of legitimate reliance would be denied if contemporaneous evidence were required in order to retain for the 2.5H formula.

The EPA agrees. Additionally, credit afforded by the 2.5H formula in excess of that resulting from the use of the H+1.5L derivative is likely to be small, except when the building on which stack height credit is based is substantially taller than it is wide. Finally, it is EPA's view that the court did not intend that sources be subject to a rigorous or overly stringent of reliance, but only that they be accorded a reasonable opportunity to show reliance on the 2.5H formula. For these reasons, EPA will allow the submission of reconstructed, i.e., noncontemporaneous documentary evidence to demonstrate reliance on the 2.5H formula.

Definition of "Nearby". Comments were submitted by UARG and others, arguing that, effectively, no limitation should be placed on the consideration of terrain-induced downwash. Alternatively, some of these commenters argued that the court decision requires that a limitation be adopted that does not apply any distance restriction of ½ mile in modeling terrain effects such as is

applied to structures in the use of GEP formulae, but rather allows consideration of all terrain that results in the same downwash effect as those structures within ½ mile of the stack.

Other commenters have argued that the court decision and legislative history preclude EPA from allowing consideration of any terrain beyond a distance of ½ mile, regardless of where it begins.

Response. For the reasons summarized below, EPA does not accept either the interpretation that the court decision authorizes EPA to adopt a definition based solely on effect, or that it limits consideration exclusively to terrain features falling entirely within ½ mile.

When Congress discussed the allowance of credit for stack height to address downwash, it stated that the term "nearby" was to be "strictly construed," noting that if the term were to be interpreted "to apply to man-made structures *or terrain features* ½ to ½ mile away from the sources or more, the result could be an open invitation to raise stack heights to unreasonably high elevations and to defeat the basic underlying committee intent." [14]

In its opinion, the court held that EPA could not give unlimited credit when modeling terrain features because that would conflict with the Congressional intention to impose artificial limits on that credit. The court was not presented with, and did not address, the question of what to do about terrain features that "began" within ½ mile and extended outside it. The approach adopted by EPA carried out this congressional purpose to impose an artificial limit but at the same time reflects the real facts more closely than an absolute ½ mile limitation.

Unlike man-made structures, terrain features do not have readily definable dimensions other than height. For this reason, EPA has defined "nearby" as generally allowing inclusion of consideration of terrain features that fall within a distance of ½ mile of the stack. EPA's definition will permit consideration of such terrain that extends beyond the ½ mile limit if the terrain begins within ½ mile, allowing that portion within 10 times the maximum height of the feature, not to exceed 2 miles, as described in the proposal.

To define when a terrain feature "begins" within ½ mile, EPA has related terrain height at the ½ mile distance to the maximum stack height that could be justified under the other two methods for determining GEP. Accordingly, EPA will require that terrain features reach a height at the ½ mile distance limit of either 26 meters (i.e., 65 meters divided by 2.5) or 40 percent of the stack height determined by the GEP formulas applied to nearby buildings.

Treatment of New versus Existing Sources Under the Definition of "Nearby". In the proposal, EPA requested comment on whether new sources should be treated differently from existing sources and presented two options for addressing them.

Few comments were received on these options. Several questioned the logic of distinguishing between new and existing sources in the regulations. One commenter argued that new and existing sources should both be subject to the strict ½ mile limit proposed under one option for new sources only. This has already been discussed under EPA's response to comments on the general definition of "nearby" and is not addressed further here.

Response. New sources are initially subject to more stringent control requirements than many existing sources. Consequently, it is less likely that the emission limitations and stack height credits for these sources will be affected by terrain features. Furthermore, EPA believes that the effect of applying a more restrictive distance limitation will be insignificant and will result only in minor changes in siting, rather than substantial relocation of sources. For this reason, EPA has selected the second option, treating new and existing sources identically under the definition of "nearby."

EPA is giving this definition of "nearby" retroactive application to December 31, 1970. The court's decision makes clear its conclusion that Congress affirmatively focused on this issue and decided thus making application as of the enactment date proper.

Definition of Other Dispersion Techniques. The EPA received many comments on the proper scope of the definition of "dispersion techniques," and perhaps more on the appropriate bounds of the exclusions. Industry commenters generally argued that EPA had improperly proposed to deny consideration for plume-enhancement effects that are "coincidental" with techniques and practices routinely carried out for sound engineering and economic reasons. They argued that EPA should prohibit credit only when a technique or practice was decisively motivated by a desire for dispersion credit. Such an approach would create a "but for" test using the intent of the source owner or operator as the basis for EPA's decisions.

Other commenters argued that EPA must use a test based purely on *effects*, prohibiting credit where a technique or practice has the effect of enhancing dispersion, regardless of any other justification.

Response. In the final regulation, EPA has rejected the polar positions discussed above. The argument that dispersion *effects* are forbidden regardless of motive is discussed and rejected as a part of the general response to the argument that only "well-controlled" sources can receive any dispersion credit.

Conversely, a pure "but for" test runs the risk of creating exclusions that effectively swallow the rule itself. The EPA judges that few, if any, circumstances are likely to arise in which some other benefit or justification cannot be asserted as the basis for a practice, and therefore for such an exclusion.

Where prospective evaluation of merged gas streams, or combined stacks, is concerned, there is no reason to assume the serious administrative burdens investigating such claims might entail. The court directed EPA to apply an intent test "at a minimum," and left it free to take an approach that may be less generous toward credit for combined stacks. Since sources in the future will be able to plan against the background of rules that define permissible credits precisely, little unfairness results from a restrictive approach.

Where retrospective application is concerned, however, the retroactivity analysis spelled out by the court directs that an intent-based test be employed as described later.

Accordingly, after considering the record on these matters, EPA has determined to take a "middle-ground" approach to this question. The final regulation retains the same broad prohibition found in the proposal on increasing exhaust gas plume rise by manipulation of parameters, or the combining of exhaust gases from several existing stacks into one stack, with several classes of exclusions. These exclusions recognize the existence of independent justifications based on engineering and/or economic factors, and include:

(1) Demonstration of original facility design and construction with merged gas streams;

(2) Demonstration that merging after July 8, 1985 is part of a change in operation that includes the installation of pollution controls and results in a net reduction in allowable emissions of the pollutant for which credit is sought or

[14] H.R. Report No. 294, 95th Cong., 1st Sess. 92 (1977).

(3) Demonstration that merging before July 8, 1985 was part of a change in operation that included the installation of control equipment, or was carried out for sound economic or engineering reasons. An allowable emissions increase creates the presumption that the merging was not carried out for sound economic or engineering reasons.[16]

Of these exclusions, the first is identical to the proposal, and the second and third are modifications of the second exclusion included in the proposal, with a refinement based on prospective/retroactive application.

The first exclusion was retained for the reasons stated in the proposal. After reviewing the comments submitted, EPA determined that its previous conclusion—that standard practice in designing and constructing facilities routinely includes venting emissions from several units into a common or multiflued stack—is correct. Sound engineering and economic reasons, based on costs of constructing and maintaining separate stacks, availability of land, and cost savings for pollution control equipment support facility design and construction considerations. Even if air pollution requirements did not exist at all, sources would have incentives to use as few stacks as possible.

Since *increasing* plume rise, rather than plume rise itself, is a "dispersion technique" and original design and construction define the initial base, such original design and construction of merged gas streams is not considered a dispersion technique. Moreover, in designing the facility, a source can usually choose to build one larger unit rather than several smaller units. Therefore, prohibiting credit for original design generally only affect the design of units and not the plume rise.

Objections have been raised to applying this logic to sources which are constructed over a period of time, but use a single stack. However, the same factual arguments just listed would apply is the same, if the original design included provision for the additional units in the plans for the facility, and in the design and construction of the stack. In such a case, the later units merged into the stack would be included within the exclusion.

In addition, it would be logically very difficult to apply a rule denying credit to original design stacks. EPA or the State would have to assume how many stacks would have been built absent a desire for dispersion credit, where they would have been located, and how high they would have been. Since these alternative stacks would be purely hypothetical, there would be no clear way of answering these questions; the answer would simply have to be selected arbitrarily from the wide range of possible answers. This problem is absent when existing stacks have been combined.

In contrast, EPA finds changes from the original design of a facility in order to include merged stacks to require a narrower judgment. The EPA concluded that, where prospective application is concerned, the exclusion should be available only to sources that combine stacks reduces allowable emissions of the pollutant for which the credit is granted. There are obvious economic advantages in combining stacks to reduce the number of emission control units that must be purchased. In addition, the installation of pollution control for the pollutant in question provides substantial assurance that the purpose of the combination is not to receive a more lenient emission limit.

However, given past EPA guidance on merging of stacks, EPA has concluded that retroactive application of this test would not be proper. The EPA guidance documents uniformly took the view that merging of separate stacks into a single stack "is generally not considered a dispersion technique" absent other factors such as excessive use of fans or other devices.[18] Each document provided guidance to a source of a Regional Office regarding the proper treatment of merged stacks in calculating emission limitations. Considering these statements, EPA must consider the standards expressed by the court, as previously discussed in this notice, in judging the propriety of a differing standard for retroactive application. Given the nature and applications of the guidance which it issued in the past, EPA judges the first two criteria—that is, whether the new rule represents an abrupt departure from well-established practice, and whether the parties against whom the new rule is applied relied on the former rule—to be satisfied. In addition, applying the prospective criteria to past practice would require significant changes in fuel and/or control equipment for parties whose emission limits were based on previous guidance. Finally, and particularly where sources have not been allowed to increase their previous emissions as a result of the combining of stacks, EPA does not judge the statutory interest to be overriding in this instance since the rule even in its retrospective version only exempts sources that can show a reasonable non-dispersion enhancement ground for combining stacks, and thereby implements the "intent" test suggested by the court. On the other hand, EPA has never suggested that combined stacks that *cannot* meet such a test are proper. Sources whose actual emissions are increased, or whose emission limitations are relaxed in connection with the combining of stacks create a strong presumption that the combination was carried out in order to avoid the installation of controls. Such combinations would indeed run counter to the statutory purpose, and retrospective application of a test that forbids them is therefore proper.

Exemptions from the Definition of Dispersion Techniques. The EPA received numerous comments in response to its request for input on what consideration, if any, should be given to excluding sources from the definition of "Dispersion Techniques" whose emissions are below a specified level or whose stacks are less than the *de minimis* height. These commenters argued that combining gas streams in particular often had an economic justification independent of its effects on dispersion, and therefore should not be generally forbidden. Other comments stated that, in considering any such exclusion, EPA should consider the effect on total atmospheric loadings.

Response. Some limitation on the number of sources affected by the definition of "dispersion techniques" necessary for EPA to carry out the stack height program. There are currently estimated to be over 23,000 sources of SO_2 in the United States with actual emissions exceeding 100 tons per year. It would not be possible for EPA or States to review the emission limits of even a significant fraction of this number within a reasonable time period. Twenty-two thousand of these sources have emissions less than 5,000 tons per year and contribute a total of less than 13 percent of the total annual SO_2 emission.[17] For this reason, and for reasons of administrative necessity discussed earlier, EPA is adopting an exemption from prohibitions on manipulating plume rise for facilities with allowable SO_2 emissions below

[16] In cases where no emission limit existed for a source prior to the merging, such merging is not to result in any increase in the actual emissions that occurred prior to the merging.

[18] Memorandum from Darryl Tyler to Steven Rothblatt, August 20, 1980. See also letter from Walt Barber from Howard Ellis, October 6, 1980, and from David Stonefield to Joseph Puma, June 27, 1980.

[17] Memorandum from Eric Ginsburg, OAQPS to David Stonefield, "Stratification of SO_2 Point Sources by Size," June 26, 1984.

5,000 tons per year. The EPA believes the effect of this exemption on total SO_2 emissions to be *de minimis* in nature. Even if these sources were able to increase their emission rates as the result of an exemption from the definition of dispersion techniques, their combined effect would not be significant. Indeed, because these sources are exempt on the basis of their annual emissions, there exists an upper limit to the extent to which they may obtain relaxed emission limitations, i.e., to maintain an exemption, the annual emissions of a source may never exceed 5,000 tons per year. For these reasons, the 5,000 ton limit passes a *de minimis* test even more clearly than the 65-meter limit included without challenge in the prior version of this rule. Moreover, EPA believes that a large majority of these sources would not be inclined to seek less stringent emission limitations, in part because a substantial portion of them are limited by State and local fuel use rules.

The EPA believes at this time that a *de minimis* size exemption is justified only for sources of SO_2 and that the number of small sources for which emission limitations for other pollutants are a significant concern would not support a similar exemption. The EPA will continue to review the need for such exemptions and, if deemed appropriate, will propose them for review and comment at a later date.

Plume Impaction. The EPA received a number of comments requesting that credit for plume impaction be retained on the grounds that eliminating such credit would have severe impacts on existing sources. Several approaches were offered for overcoming plume impaction effects in modeling to determine emission limitations based on GEP stack height. Generally, these approaches focused on modifying the stack-terrain relationship represented in the models. Several commenters argued along these lines that the court recognized and approved of EPA's attempt to avoid the effects of plume impaction, but only disapproved of EPA's regulatory method in allowing sources to avoid impaction. These commenters argued that the court did not preclude EPA from allowing credit to avoid plume impaction, but only from allowing credit for stack height in excess of GEP; this, it was argued, could be remedied in a way that was consistent with the court decision by incorporating impaction avoidance within the definition of GEP. It was also suggested that EPA give its "interim approval" to the use of certain refined complex terrain models, in particular the Rough Terrain Display Model (RTDM), to calculate emission limitations for sources affected by changes to the stack height regulation.

Response. The EPA agrees that the court was cognizant of the problem of plume impaction and noted that there was much to recommend EPA's allowance of credit for impaction avoidance. However, the allowance of credit for plume impaction was not remanded to EPA for revision or reconsideration, but was reversed by the court as exceeding EPA's authority.

The EPA does not agree that it would be possible to redefine GEP in a manner that allowed credit for avoiding impaction, since GEP is explicitly defined in terms of preventing excessive concentrations due to downwash, wakes, and eddies. Plume impaction is a phenomenon completely unrelated to downwash and, rather, is a consequence of effluent gases being emitted at an insufficient height to avoid their striking downwind hillsides, cliffs, or mountainsides prior to dilution. Manipulation or "adjustment" of modeling parameters to avoid predicting theoretical plume impaction where actual stacks have been constructed above GEP would be tantamount to granting the same impaction credit that was invalidated by the court. Furthermore, EPA believes that the manipulation of modeling parameters for no other reason than to avoid an undesirable result is technically indefensible.

The EPA is in the process of revising its "Guideline on Air Quality Models." A number of individuals commenting on the guideline have requested that EPA approve the use of the RTDM model as a preferred technique. Further discussion of this issue can be found in documents associated with EPA's action on the modeling guideline (Docket No. A-80-46). With respect to the revised stack height regulation, EPA has not rejected the use of RTDM. To the extent that appropriate and complete data bases and information on model accuracy are available, EPA may approve the use of RTDM on a case-by-case basis when executed in accordance with the guideline requirements. Sponsors of RTDM and presently developing more extensive support for broader applications of the model. When such support is received and reviewed by EPA, consideration will be given to allowing more general use of RTDM in regulatory activities such as compliance with the stack height rule.

Timetable for State Implementation. A number of commenters stated that it was not possible to conduct the necessary analyses, prepare and submit revised State rules and source-specific emission limitations within the 9-month timeframe referred to in the November 9 proposal. A variety of alternative schedules were proposed by these commenters for consideration by EPA.

Response. As with EPA's previous allowance of credit for plume impaction, the timetable for preparation and submittal of revised SIP's was not an issue remanded by the court. The EPA is in agreement that these revisions to the stack height regulation will require significant efforts by State and local agencies, individual emission source owners and EPA Regional and Headquarters offices in order to comply within the 9-month timeframe required by section 406(d)(2) of the 1977 Clean Air Act Amendments. It was based on this concern that EPA originally provided a two-step process for States to follow in revising their plans and submitting them to EPA for approval. However, the court found that this effort was explicitly contrary to section 406(d)(2) and ordered EPA to follow the 9-month schedule provided in the Clean Air Act.

New Sources Tied into Pre-1971 Stacks. As indicated earlier, in response to the court opinion, EPA proposed to deny "grandfathered" status to post-1970 sources tying into pre-1971 stacks. Some commenters stated that EPA was in no way prohibited from allowing credit for new sources ducted into pre-1971 stacks exceeding GEP height. Rather, they indicated that EPA simply had to provide justification for such allowance.

Other commenters indicated general support for EPA's proposal with respect to new sources tying into grandfathered stacks, but suggested that several expansions or clarifications be provided, most notably that, in addition to new and major modified sources, reconstructed sources not be allowed greater than GEP stack height credit when tying into greater than GEP stacks.

Response. In further review of this issue, EPA can find no convincing rationale to allow sources constructed after December 31, 1970, to avoid GEP restrictions simply by ducting their emissions into a stack that is "grandfathered" under section 123. On the contrary, the intent of section 123 to limit credit for stack height in excess of GEP suggests that EPA should not allow credit for such stack height except to honor financial commitments made prior to the end of 1970. Sources in existence after that date should be treated equally under the regulation and not allowed to avoid legitimate control requirements

through the use of "grandfathered" stack heights.

Sources undertaking major modification, or reconstruction become subject to additional control requirements under the Clean Air Act and are treated as "new sources" for the purpose of new source review and PSD requirements. EPA finds it appropriate that GEP requirements should be invoked at the time that other requirements for new, modified, or reconstructed sources become applicable.

Summary of Modifications to EPA's Proposal Resulting from Public Comments

Based on comments received during the public comment period, EPA has made a number of revisions to its proposed regulation in addition to those discussed above. These revisions are summarized below.

Section 51.1(hh)(2)(B)(ii) of the regulation has been clarified to require sources merging gas streams after July 8, 1985 to achieve a net reduction in allowable emissions. This change was made to make it clear that the effects of merging should not be used as a way of achieving compliance with present emission limits and to avoid penalizing sources who are presently emitting at less than allowable levels.

Section 51.1(hh)(2)(B)(iii) allows credit for a source that merged gas streams in a change of operation at the facility prior to July 8, 1985 that included the installation of control equipment or had other sound engineering or economic reasons. Any increase in the emission limitation, or in the previous actual emissions where no emission limitation existed created a presumption that those sound reasons were not present.

Section 51.1(hh)(2)(E) has been added to exclude from the definition of prohibited "dispersion techniques" the use of techniques affecting final exhaust gas plume rise where the resulting total allowable emissions of SO_2 from the facility do not exceed 5,000 tons per year.

Section 51.1(ii)(1) has been revised to specify that the 65 meter *de minimis* height is to be measured, as in other determinations of GEP stack height, from the ground-level elevation at the base of the stack. This does not represent a substantive change in the rule or in its application relative to past practices, but rather a simple clarification.

Section 51.1(ii)(2) has been revised to require that source owners demonstrate that the 2.5H formula was relied on in establishing the emission limitation.

Section 51.1(ii)(3) has been revised as discussed elsewhere in this notice to specify that an emission rate equivalent to NSPS must be met before a source may conduct fluid modeling to justify stack height credit in excess of that permitted by the GEP formulae.

Section 51.1(jj) now defines "nearby" for purposes of conducting field studies or fluid modeling demonstrations as 0.8 km (½ mile), but allows limited consideration of terrain features extending beyond that distance if such features "begin" within 0.8 km, as defined in the regulation.

Section 51.1(kk) has been revised to provide separate discussions of "excessive concentrations" for the separate situations discussed earlier in this preamble. As that discussion makes clear, EPA believes that the differing categories of sources subject to this rule are best addressed by requirements that vary somewhat with those circumstances. This definition embodies that approach.

Section 51.12(k) has been corrected to provide that the provisions of § 51.12(j) shall not apply to *stack heights* in existance before December 31, 1970. The proposal had incorrectly stated that ". . . § 51.12 shall not apply to *stacks* existence. . . ."

Program

This regulation does not limit the physical stack height of any source, or the actual use of dispersion techniques at a source, nor does it require any specific stack height for any source. Instead, it sets limits on the maximum credit for stack height and other dispersion techniques to be used in ambient air modeling for the purpose of setting an emission limitation and calculating the air quality impact of a source. Sources are modeled at their actual physical stack height unless that height exceeds their GEP stack height. The regulation applies to all stacks in existence and all dispersion techniques implemented since December 31, 1970.

State Implementation Plan Requirements

Pursuant to section 406(d)(2) of the Clean Air Act Amendments of 1977, EPA is requiring that all States (1) review and revise, as necessary, their SIP's to include provisions that limit stack height credits and dispersion techniques in accordance with this regulation and (2) review all existing emission limitations to determine whether any of these limitations have been affected by stack height credits above GEP or by any other dispersion techniques. For any limitations that have been so affected, States must prepare revised limitations consistent with their revised SIP's. All SIP revisions and revised emission limitations must be submitted to EPA within 9 months of promulgation of this regulation.

Interim Guidance

In its proposal, EPA stated that it would use the proposed regulation to govern stack height credits during the period before promulgation of the final regulation. The EPA further stated that any stack height credits that are granted based on this interim guidance would be subject to review against the final rules and may need to be revised. Consequently, with these final rules, EPA is requiring that any actions that were taken on stack heights and stack height credits during this interm period be reviewed and revised as needed to be consistent with this regulation.

Regulatory Flexibility Analysis

Pursuant to the provisions of 5 U.S.C. 605(b), I hereby certify that the attached rule will not have significant economic impacts on a substantial number of small entities. This rule is structured to apply only to large sources: i.e., those with stacks above 65 meters (213 feet), or with annual SO_2 emissions in excess of 5,000 tons, as further noted in the rule. Based on an analysis of impacts, electric utility plants and several smelters and pulp and paper mills will be significantly affected by this regulation.

Executive Order 12291

Under Executive Order 12291, EPA must judge whether a regulation is "major" and therefore subject to the requirement of a regulatory impact analysis. EPA's analysis of economic impacts predicts a potential cost to emission source owners and operators exceeding $100 million; therefore, this is a major rule under Executive Order 12291. However, due to the promulgation deadline imposed by the court, EPA did not have sufficient time to develop a full analysis of costs and benefits as required by the Executive Order. Consequently, it is not possible to judge the annual effect of this rule on the economy. A preliminary economic impact analysis and subsequent revision were prepared and are in the docket.

For any facility, the air quality and economic impact of the stack height regulation generally depends on the extent to which the actual stack at that facility conforms to GEP stack height.

Thus, when the regulation is applied to large sources, i.e., those with stack height greater than GEP and emissions greater than 5,000 tons per year, it will have the potential for producing emission reductions and increased control costs.

A preliminary evaluation of the potential air quality impacts and a cost analysis of the regulation was performed at the time of proposal. The impacts identified were established in isolation of other regulatory requirements. The report predicted a range of impacts, from a "low impact" scenario that presumed that many potentially affected sources would be able to justify their existing stack heights, configurations, and emission limitations to a "high impact" scenario which assumed that all of the potentially affected sources would be required to reduce their emissions to some degree.

In the development of its final rulemaking action, EPA refined its evaluation of potential impacts, producing revised estimates of the probable costs of the changes to the regulation and expected reductions in SO_2 emissions. As a result of this refinement, EPA estimates that the rule will yield reductions in SO_2 emissions of approximately 1.7 million tons per year. The annualized cost of achieving these reductions will be approximately $750 million, and the capital cost is expected to be approximately $700 million.

This regulation was reviewed by the Office of Management and Budget, and their written comments and any responses are contained in Docket A-83-48.

Judicial Review

The EPA believes that this rule is based on determinations of nationwide scope and effect. Nothing in section 123 limits its applicability to a particular locality, State, or region. Rather, section 123 applies to sources wherever located. Under section 307(b)(1) of the Clean Air Act [42 U.S.C. 7607(b)(1)], judicial review of the actions taken by this notice is available only by the filing of a petition for review in the United States Court of Appeals for the District of Columbia and within 60 days of the date of publication.

List of Subjects in 40 CFR Part 51

Air pollution control, Ozone, Sulfur dioxide, Nitrogen dioxide, Lead, Particulate matter, Hydrocarbons, Carbon monoxide.

Dated: June 27, 1985.

Lee M. Thomas,

Administrator.

PART 51—REQUIREMENTS FOR PREPARATION, ADOPTION, AND SUBMITTAL OF IMPLEMENTATION PLANS

Part 51 of Chapter I, Title 40 of the Code of Federal Regulations is amended as follows:

1. The authority citation for Part 51 continues to read as follows:

Authority: Sec. 110, 301(a), and 123, Clean Air Act as amended (42 U.S.C. 7410, 7601(a) and 7423).

2. Section 51.1 is amended by revising paragraphs (hh), (ii), (jj), and (kk) as follows:

§ 51.1 Definitions.

* * * * *

(hh)(1) "Dispersion technique" means any technique which attempts to affect the concentration of a pollutant in the ambient air by:

(i) Using that portion of a stack which exceeds good engineering practice stack height;

(ii) Varying the rate of emission of a pollutant according to atmospheric conditions or ambient concentrations of that pollutant; or

(iii) Increasing final exhaust gas plume rise by manipulating source process parameters, exhaust gas parameters, stack parameters, or combining exhaust gases from several existing stacks into one stack; or other selective handling of exhaust gas streams so as to increase the exhaust gas plume rise.

(2) The preceding sentence does not include:

(i) The reheating of a gas stream, following use of a pollution control system, for the purpose of returning the gas to the temperature at which it was originally discharged from the facility generating the gas stream;

(ii) The merging of exhaust gas streams where:

(A) The source owner or operator demonstrates that the facility was originally designed and constructed with such merged gas streams;

(B) After July 8, 1985, such merging is part of a change in operation at the facility that includes the installation of pollution controls and is accompanied by a net reduction in the allowable emissions of a pollutant. This exclusion from the definition of "dispersion techniques" shall apply only to the emission limitation for the pollutant affected by such change in operation; or

(C) Before July 8, 1985, such merging was part of a change in operation at the facility that included the installation of emissions control equipment or was carried out for sound economic or engineering reasons. Where there was an increase in the emission limitation or, in the event that no emission limitation was in existence prior to the merging, an increase in the quantity of pollutants actually emitted prior to the merging, the reviewing agency shall presume that merging was significantly motivated by an intent to gain emissions credit for greater dispersion. Absent a demonstration by the source owner or operator that merging was not significantly motivated by such intent, the reviewing agency shall deny credit for the effects of such merging in calculating the allowable emissions for the source;

(iii) Smoke management in agricultural or silvicultural prescribed burning programs;

(iv) Episodic restrictions on residential woodburning and open burning; or

(v) Techniques under § 51.1(hh)(1)(iii) which increase final exhaust gas plume rise where the resulting allowable emissions of sulfur dioxide from the facility do not exceed 5,000 tons per year.

(ii) "Good engineering practice" (GEP) stack height means the greater of:

(1) 65 meters, measured from the ground-level elevation at the base of the stack;

(2)(i) For stacks in existence on January 12, 1979, and for which the owner or operator had obtained all applicable permits or approvals required under 40 CFR Parts 51 and 52,

$H_g = 2.5H$,

provided the owner or operator produces evidence that this equation was actually relied on in establishing an emission limitation;

(ii) For all other stacks,

$H_g = H + 1.5L$,

where

H_g = good engineering practice stack height, measured from the ground-level elevation at the base of the stack,

H = height of nearby structure(s) measured from the ground-level elevation at the base of the stack,

L = lesser dimension, height or projected width, of nearby structure(s)

provided that the EPA, State or local control agency may require the use of a field study or fluid model to verify GEP stack height for the source; or

(3) The height demonstrated by a fluid model or a field study approved by the EPA State or local control agency, which ensures that the emissions from a stack do not result in excessive

concentrations of any air pollutant as a result of atmospheric downwash, wakes, or eddy effects created by the source itself, nearby structures or nearby terrain features.

(jj) "Nearby" as used in § 51.1(ii) of this part is defined for a specific structure or terrain feature and

(1) for purposes of applying the formulae provided in § 51.1(ii)(2) means that distance up to five times the lesser of the height or the width dimension of a structure, but not greater than 0.8 km (½ mile), and

(2) for conducting demonstrations under § 51.1(ii)(3) means not greater than 0.8 km (½ mile), except that the portion of a terrain feature may be considered to be nearby which falls within a distance of up to 10 times the maximum height (H_t) of the feature, not to exceed 2 miles if such feature achieves a height (H_t) 0.8 km from the stack that is at least 40 percent of the GEP stack height determined by the formulae provided in § 51.1(ii)(2)(ii) of this part or 26 meters, whichever is greater, as measured from the ground-level elevation at the base of the stack. The height of the structure or terrain feature is measured from the ground-level elevation at the base of the stack.

(kk) "Excessive concentration" is defined for the purpose of determining good engineering practice stack height under § 51.1(ii)(3) and means:

(1) for sources seeking credit for stack height exceeding that established under § 51.1(ii)(2), a maximum ground-level concentration due to emissions from a stack due in whole or part to downwash, wakes, and eddy effects produced by nearby structures or nearby terrain features which individually is at least 40 percent in excess of the maximum concentration experienced in the absence of such downwash, wakes, or eddy effects and which contributes to a total concentration due to emissions from all sources that is greater than an ambient air quality standard. For sources subject to the prevention of significant deterioration program (40 CFR 51.24 and 52.21), an excessive concentration alternatively means a maximum ground-level concentration due to emissions from a stack due in whole or part to downwash, wakes, or eddy effects produced by nearby structures or nearby terrain features which individually is at least 40 percent in excess of the maximum concentration experienced in the absence of the maximum concentration experienced in the absence of such downwash, wakes, or eddy effects and greater than a prevention of significant deterioration increment. The allowable emission rate to be used in making demonstrations under this part shall be prescribed by the new source performance standard that is applicable to the source category unless the owner or operator demonstrates that this emission rate is infeasible. Where such demonstrations are approved by the authority administering the State implementation plan, an alternative emission rate shall be established in consultation with the source owner or operator;

(2) for sources seeking credit after October 1, 1983, for increases in existing stack heights up to the heights established under § 51.1(ii)(2), either (i) a maximum ground-level concentration due in whole or part to downwash, wakes or eddy effects as provided in paragraph (kk)(1) of this section, except that the emission rate specified by any applicable State implementation plan (or, in the absence of such a limit, the actual emission rate) shall be used, or (ii) the actual presence of a local nuisance caused by the existing stack, as determined by the authority administering the State implementation plan; and

(3) for sources seeking credit after January 12, 1979 for a stack height determined under § 51.1(ii)(2) where the authority administering the State implementation plan requires the use of a field study or fluid model to verify GEP stack height, for sources seeking stack height credit after November 9, 1984 based on the aerodynamic influence of cooling towers, and for sources seeking stack height credit a December 31, 1970 based on the aerodynamic influence of structures not adequately represented by the equation in § 51.1(ii)(2), a maximum ground-level concentration due in whole or part to downwash, wakes or eddy effects that is at least 40 percent in excess of the maximum concentration experienced in the absence of such downwash, wakes, or eddy effects.

3. Section 51.1 is further amended by removing paragraphs (ll) and (mm).

§ 51.12 [Amended]

4. Section 51.12 is amended by removing paragraph (l).

5. Section 51.12(j) is amended by removing "and (l)" from the first sentence.

6. Section 51.12(k) is revised as follows:

(k) The provisions of § 51.12(j) shall not apply to (1) stack heights in existence, or dispersion techniques implemented on or before December 31, 1970, except where pollutants are being emitted from such stacks or using such dispersion techniques by sources, as defined in section 111(a)(3) of the Clean Air Act, which were constructed, or reconstructed, or for which major modifications, as defined in §§ 51.18(j)(1)(v)(a), 51.24(b)(2)(i) and 52.21(b)(2)(i), were carried out after December 31, 1970; or (2) coal-fired steam electric generating units subject to the provisions of Section 118 of the Clean Air Act, which commenced operation before July 1, 1957, and whose stacks were constructed under a construction contract awarded before February 8, 1974.

§ 51.18 [Amended]

7. Section 51.18(l) is amended by removing "and (l)" from the first sentence.

[FR Doc. 85-16084 Filed 7-5-85; 8:45 am]
BILLING CODE 6560-50-M

UNITED STATES ENVIRONMENTAL PROTECTION AGENCY
Office of Air Quality Planning and Standards
Research Triangle Park, North Carolina 27711

September 19, 1985

MEMORANDUM

SUBJECT: Guidance on Fluid Model Demonstrations for Determining GEP Stack Height in Complex Terrain

FROM: Joseph A. Tikvart, Chief
Source Receptor Analysis Branch, MDAD

TO: David Stonefield, Chief
Policy Development Section, CPDD

The recently promulgated stack height regulation requires that a source that wishes to receive credit for the effects of wakes, eddies and downwash produced by nearby terrain for the purpose of calculating GEP stack height must conduct a fluid model demonstration or a field study. Recent guidance for fluid modeling these terrain effects is contained in Section 3.6 of the "Guideline for Determination of GEP Stack Height (Revised)," EPA 450/4-80-023R, June 1985, available from NTIS as PB 85-225-241. In addition, the report "Fluid Modeling Determination of Good Engineering Practice Stack Height in Complex Terrain," EPA 600/3-85-022, available from NTIS PB 85-203-107, provides an actual case of how EPA conducted a GEP determination, short of performing the "excessive concentration" criteria test. Requests to conduct field studies in lieu of fluid modeling demonstrations will be evaluated on a case-by-case basis; refer to pp. 46-47 of the GEP Guideline.

Previously, EPA published three documents which form the basis for conducting fluid model demonstrations, particularly in flat terrain situations: (1) "Guideline for Fluid Modeling of Atmospheric Diffusion," EPA 600/8-81-009, April 1981, available from NTIS as PB 81-201-410; (2) "Guideline for Use of Fluid Modeling to Determine Good Engineering Practice Stack Height," EPA 450/4-81-003, July 1981, available from NTIS as PB 82-145-327; and (3) "Determination of Good-Engineering-Practice Stack Height: A Fluid Model Demonstration Study for a Power Plant," EPA 600/3-83-024, April 1983, available from NTIS as PB 83-207407.

Lastly, EPA conducted a 4-day workshop on fluid modeling and GEP determination at the Fluid Modeling Facility at RTP in February 1981, attended by staff from each Regional Office. Although some attendees are no longer with the Agency, we believe at least one person in each Region who attended is still "on board," except for Regions II and VIII, and could serve as a resource person. At the Regional Workshop on the Stack Height Regulation next month, we will poll the attendees concerning the need for

another fluid modeling workshop for Regional Office and State technical staff. If a need is expressed and specific attendees can be identified, we will request the Meteorology and Assessment Division, ASRL, to present such a workshop at RTP within the next few months.

The above documents together with staff that have some knowledge of fluid modeling should enable most Regions to provide initial technical assistance to the States and enable the States to increase their own level of expertise. Note that document (2) contains a report checklist in Section 5, outlining what a fluid model report should contain. Additional items explicitly related to complex terrain studies may be required on a case-by-case basis, especially after reviewing EPA's example study carefully. More detailed procedures for implementing the excessive concentration criteria calculations, using data from a fluid model demonstration, are being developed and will be provided at the upcoming Regional Workshop.

Should technical questions arise regarding GEP determinations or fluid model demonstrations, please contact Jim Dicke or Dean Wilson of my staff, FTS 629-5681. We assume the Regional Office staffs will attempt a first-cut resolution of technical issues before requesting our assistance.

cc: S. Reinders
R. Rhoads
F. Schiermeier
D. Wilson

UNITED STATES ENVIRONMENTAL PROTECTION AGENCY
Office of Air Quality Planning and Standards
Research Triangle Park, North Carolina 27711

OCT 10 1985

MEMORANDUM

SUBJECT: Questions and Answers on Implementing the Revised Stack Height Regulation

FROM: G. T. Helms, Chief
Control Programs Operations Branch (MD-15)

TO: Chief, Air Branch, Regions I-X

A number of questions have arisen in several areas of the revised stack height regulation since its promulgation on July 8. The following answers have been developed in response. The questions and answers are arranged under the general topic headings of interpretation of the regulation, State implementation plan (SIP) requirements, and modeling analyses. Please continue to call Sharon Reinders at 629-5526 if you have further comments or additional questions.

Interpretation of the Regulation

1. Q: What criteria should be used to determine when a stack was "in existence" with respect to the various grandfathering dates in the regulation?

A: The recent promulgation of revisions to the stack height regulation did not change the definition of "in existence." The definition is provided in 40 CFR 51.1(gg) and includes either the commencement of continuous construction on the stack or entering into a binding contract for stack construction, the cancellation of which would result in "substantial loss" to the source owner or operator. The definition of what constitutes a "substantial loss" will be the subject of future guidance.

2. Q: What "source" definition should be used in determining whether tie-ins to grandfathered stacks should be permitted or prohibited?

A: The term "source" in this instance means a single emitting unit. Thus, credit for tying a single post-1970 unit(s) into a grandfathered stack serving a number of old units is prohibited under the regulation.

3. Q: What is meant in the regulation by "facility"?

A: For purposes of this regulation, the definition contained in 40 CFR 51.301(d) should be used. That definition essentially defines the term as the entire complex of emitting activities on one property or contiguous properties controlled by a single owner or designee.

4. Q: Must good engineering practice (GEP) stack height be established separately for each pollutant? If not, how should it be determined?

A: It is not necessary to calculate a separate GEP stack height for each pollutant. Since "GEP" is defined by Section 123 of the Clean Air Act as the height necessary to ensure against excessive concentrations of any air pollutant, it follows that GEP should be established for each source based on the pollutant requiring the greatest height to avoid excessive concentrations.

5. Q: How should "reliance" on the 2.5H formula be determined?

A: First, "reliance" on the 2.5H formula applies only to stacks in existence before January 12, 1979. Credit for "reliance" on the 2.5H formula can be granted under the following cases: (a) Where the stack was actually built to a height less than or equal to 2.5H; (b) Where the stack was built taller than 2.5H and the emission limitation reflects the use of 2.5H in the SIP modeling analysis; or (c) Where evidence is provided to show "reliance" as discussed in the following paragraph. If no modeling was used to set the emission limitation for the source, then it cannot be argued that there was "reliance" on the formula, since EPA's guidance was specifically aimed at using stack height credit in establishing emission limitations. Once it is determined that the emission limitation was in fact based on estimates of dispersion from the stack, then the source can be said to have properly "relied" on the 2.5H formula. In the event that it cannot be determined that the emission limit is based on "reliance" on the 2.5H formula, then the refined H + 1.5L formula must be used.

Where a clear relationship between a 2.5H stack height and the emission limitation cannot be shown, where the emission limitation was not calculated based precisely on the 2.5H height, or where the stack height used in modeling cannot be verified, then additional evidence will be needed. Preferred would be written documentation, such as copies of the original engineering calculations or correspondence between the State or the emission source owner and EPA indicating that the 2.5H formula should be used to derive the emission limitation. However, recognizing that such evidence is often not retained for more than a few years, "reconstructed" documentation may be considered, but should only be used as a last resort. This evidence should include explanations by those individuals who were involved in designing the facility, calculating emission rates, and who represented the facility in dealings with the

State and EPA on how the emission limit was derived, including a discussion of how the formula was originally used in deriving the source emission limitation, a discussion of the analytical method applied, and a listing of any contacts or discussions with EPA during that period. This listing will aid EPA in searching its own files to find any records of communication or correspondence that may bear on the issue.

In no case should a source be allowed after January 12, 1979, to obtain a relaxation in the emission limitation by arguing that it "relied" on past EPA guidance endorsing the 2.5H formula. In cases where a relaxation based on GEP formula height is sought in the future, the refined H + 1.5L formula must be used.

6. Q: The preamble specifically discusses cooling towers as structures to which the formula should not be applied. Will the Office of Air Quality Planning and Standards be specifying other structures that are not well represented by the formula?

A: The discussion in the preamble and GEP guideline is not intended to be all-inclusive; judgment should be used in determining when fluid modeling should be used to estimate the effects of structures with rounded, domed, or tapered shapes. Water towers and storage tanks are additional examples of such structures. As additional information becomes available on the aerodynamic effects of specific building shapes and configurations, we will evaluate the need to revise the GEP guidance. However, at present, there are no plans to issue a "laundry list" of structures to which the formulas do not apply.

SIP Requirements

7. Q: Should a compliance averaging time be explicitly stated in a SIP revision for sulfur dioxide (SO_2) emission limits that are revised to meet the stack height regulation?

A: A compliance averaging time need not be specified as an enforceable SIP provision as long as a stack test compliance method is in place in the underlying federally approved SIP. EPA's current national policy requires that SIP's and permits contain enforceable "short-term" emission limits set to limit maximum emissions to a level which ensures protection of the short-term national ambient air quality standards (NAAQS) and prevention of significant deterioration (PSD) increments. EPA relies upon a short-term stack test provision in the SIP as the method of determining compliance with the emission limits. In lieu of a stack test, EPA has accepted fuel sampling and analysis and continuous emission in-stack monitors (CEM's). When compliance is to be determined from information obtained by fuel sampling and analysis and CEM's, short-term averaging times should be specified.

8. Q: Are all States required to have "stack height regulations"?

A: Limitations on creditable stack height and dispersion techniques impact the SIP program in two areas--SIP emission limits for existing sources and SIP provisions covering new source review (NSR)/PSD permitting procedures. For existing sources, State regulations limiting credit for stack height and other dispersion techniques (stack height regulations) are not necessary as long as the SIP emission limits are not affected in any manner by so much of the stack height as exceeds GEP, or any other dispersion technique. Where a State has stack height regulations, those regulations must be consistent with EPA's regulation. Where a SIP contains regulations that are inconsistent with EPA's regulation, the State must either adopt a stack height regulation that is consistent with EPA's or incorporate the EPA regulation by reference.

For the NSR/PSD programs, it is essential that the plan contain limitations on the amount of creditable stack height and other dispersion techniques. The following cases have been developed to illustrate what action(s) may be required of the State since promulgation of the stack height regulation.

CASE A(1): A fully or partially delegated PSD program that references but does not define GEP where the delegation agreement does not contain a date to define which version of the PSD rule is being delegated.

ACTION: Notify the State that all permits issued henceforth must be consistent with EPA's stack height regulation. All permits previously issued must be reviewed and revised as necessary within 9 months.

CASE A(2): A fully or partially delegated PSD program that references but does not define GEP where the delegation agreement does contain a date to define which version of the PSD rule is being delegated.

ACTION: Update the delegation agreement to reflect agreement with EPA's stack height regulation as of July 8, 1985. Notify the State that all permits issued henceforth must be consistent with EPA's stack height regulation. All permits previously issued must be reviewed and revised as necessary within 9 months.

CASE B: The current federally approved SIP for NSR/PSD does not contain a reference to GEP or dispersion techniques, i.e., provisions assuring that emission limitations will not be affected by stack height in excess of GEP or any prohibited dispersion techniques do not exist in the current SIP.

ACTION: Notify the State that such provisions must be adopted and submitted as a SIP revision within 9 months. This can be acccomplished by adopting stack height regulations at the State level or by adopting the appropriate reference and commitment to comply with EPA's stack height regulation as promulgated on July 8, 1985. Interim permitting should be consistent with EPA's stack height regulation.**

CASE C: The current federally approved SIP for NSR/PSD contains references to, but does not define, GEP or dispersion techniques.

ACTION: Notify the State that a commitment to comply with EPA's stack height regulation as promulgated on July 8, 1985, is required. If a State is unable to make such a commitment, State regulations must be revised to be consistent and submitted to EPA as a SIP revision within 9 months and interim permitting should be consistent with EPA's stack height regulation. No "grace period" will be allowed for sources receiving permits between July 1985 and April 1986.**

CASE D: The current federally approved SIP for NSR/PSD contains stack height regulations that are inconsistent with EPA's regulation.

ACTION: Notify the State that such regulations must be revised to be consistent and submitted as a SIP revision within 9 months and that interim permitting should be consistent with EPA's stack height regulation.**

CASE E(1): A SIP for NSR/PSD has been submitted to EPA, or will be submitted to EPA before the due date for stack height revisions. The submittal contains provisions that conflict with EPA's stack height regulation.

ACTION: Notify the State that EPA cannot approve the submittal until it is revised pursuant to EPA's July 8, 1985, regulation.

**In the event that a State does not have legal authority to comply with EPA's regulation in the interim (e.g., because it must enforce State rules that are inconsistent with EPA's regulation) and is compelled to issue a permit that does not meet the requirements of the EPA revised stack height regulation, then EPA should notify the State that such permits do not constitute authority under the Clean Air Act to commence construction.

CASE E(2): As in Case E(1), a SIP for NSR/PSD has been submitted to EPA or will be submitted to EPA before the due date for stack height revisions. The submittal is not inconsistent with EPA's stack height regulation, but portions of the existing approved SIP that relate to the submittal are inconsistent.

ACTION: Approve the SIP submittal based on a commitment by the State to correct the inconsistencies in its existing SIP to comport with EPA's July 8 regulation and submit the corrections as a SIP revision within 9 months. Interim permitting should be consistent with EPA's stack height regulation.** If the existing SIP is ambiguous, i.e., the SIP references but does not define terms relating to GEP or dispersion techniques, the action steps outlined in Case C above should be followed.

CASE F: In nonattainment areas, emission limits or permits do not always include modeling, but rather are based on lowest achievable emission rate (LAER) and offsets.

ACTION: If no modeling is used in the issuance of a permit, the emission requirements for the source are not "affected" by stack heights or dispersion techniques, and no action is needed. However, if modeling was used in the process of preparing and issuing a permit, such as cases where offsets were obtained offsite, that modeling must be reviewed for consistency with the stack height regulation.

9. Q: What must all States do now that EPA's stack height regulation is promulgated?

A: States must review and revise their SIP's as necessary to include or revise provisions to limit stack height credits and dispersion techniques to comport with the revised regulations, and, in addition, review and revise all emission limitations that are affected by stack height credit above GEP or any other dispersion techniques. In accordance with Section 406(d)(2) of the Clean Air Act, States have 9 months from promulgation to submit the revised SIP's and revised SIP emission limitations to EPA.

In an August 7, 1985, memo titled "Implementation of the Revised Stack Height Regulation--Request for Inventory and Action Plan to Revise SIP's," Regional Offices were requested to begin working with each of their States to develop States' Action Plans. Each Action Plan should include the following: (1) An inventory of (a) all stacks greater than 65 meters (m), (b) stacks at sources which exceed 5,000 tons per year total allowable SO_2 emissions; and (2) A reasonable schedule of dates for significant State actions to conform both State stack height rules and emission limitations to EPA's stack height regulation. Schedules should include increments of progress. Regional Offices should be satisfied that each of their States provide schedules for completion of the tasks

as outlined in the August memo and report the status of schedule commitments to them on a monthly basis. Regional Offices have been asked to forward monthly status reports to the Control Programs Development Division on the States' progress to meet scheduled commitments and also report the results of followup with the States on schedules that are not met. In order to facilitate tracking the States monthly progress, guidance on a standardized format will be issued shortly.

Modeling Analyses

10. Q: Is there any restriction or prohibition against, or demonstration required for, raising an existing (or replacing) stack up to 65 m?

A: No, as long as prohibited dispersion techniques are not employed.

11. Q: Are flares considered to be stacks?

A: No, flares are excluded from the regulation.

12. Q: What load should be used for a fluid modeling demonstration?

A: One hundred percent load should generally be used unless there is a compelling argument otherwise..

13. Q: Can new or modified sources who have agreed to a case-by-case best available control technology (BACT) emission rate be required to use this rate for fluid modeling rather than a less stringent new source performance standard (NSPS) emission rate?

A: As set forth in 40 CFR 51.1 (kk), the allowable emission rate to be used in making demonstrations under this part shall be prescribed by the NSPS that is applicable to the source category unless the owner or operator demonstrates that this emission rate is infeasible.

14. Q: Must the exceedance of NAAQS or PSD increment due to downwash, wakes, or eddies occur at a location meeting the definition of ambient air?

A: No, the exceedance may occur at any location, including that to which the general public does not have access.

15. Q: Is a source that meets NSPS or BACT emission limits subject to restrictions on plume merging?

A: Yes. However, in a majority of such cases, there will be no practical effect since BACT or NSPS limits will be sufficient to assure attainment without credit for plume rise enhancement.

Q: What stack parameters are to be used in modeling when the actual stack height is greater than GEP height?

A: Where it is necessary to reduce stack height credit below what is in existence, for modeling purposes, use existing stack gas exit parameters--temperature and flow rate--and existing stack top diameter and model at GEP height.

17. Q: How should a stack that is less than GEP height be modeled when dispersion techniques are employed?

A: In order to establish an appropriate emission limitation where a source desires to construct less than a GEP stack but use dispersion techniques to make up the difference in plume rise, two cases should be tested. First, conduct a modeling analysis inputting the GEP stack height without enhanced dispersion parameters, then conduct a second analysis inputting the less than GEP stack height with the increased plume rise. The more stringent emission limitation resulting from each of the two runs should be the one specified as the enforceable limitation.

18. Q: How are the effects of prohibited dispersion techniques to be excluded for modeling purposes?

A: Where prohibited dispersion techniques have been used, modeling to exclude their effects on the emission limitation will be accomplished by using the temperature and flow rates as the gas stream enters the stack, and recalculating stack parameters to exclude the prohibited techniques (e.g., calculate stack diameter without restrictions in place, determine exit gas temperatures before the use of prohibited reheaters, etc.).

19. Q: How are single flued merged stacks and multiflued stacks to be treated in a modeling analysis?

A: This is a multistep process. First, sources with allowable SO_2 emissions below 5,000 tons/year may be modeled accounting for any plume merging that has been employed. For larger sources, multiflued stacks are considered as prohibited dispersion techniques in the same way as single flued merged gas streams unless one of the three allowable conditions has been met; i.e., (1) the source owner or operator demonstrates that the facility was originally designed and constructed with such merged gas streams; (2) after date of promulgation, demonstrate that such merging is associated with a change in operation at the facility that includes the installation of pollution controls and results in a net reduction in the allowable emissions of the pollutant for which credit is sought; or (3) before date of promulgation, demonstrate that such merging did not result in any increase in the allowable emissions (or, in the event that no emission limit existed, actual emission level) and was associated with a change in operation at the facility that included the installation of

emissions control equipment or was carried out for sound economic or engineering reasons, as demonstrated to EPA. Guidelines on what constitutes sound economic or engineering justification will be issued shortly.

If plume merging from multiflued stacks is not allowable, then each flue/liner must be modeled as a separate source and the combined impact determined. For single flued merged stacks where credit is not allowed, each unit should be modeled as a separate stack located at the same point. The exit parameters, i.e. velocity and temperature, would be the same as for the existing merged stack conditions and the volume flow rate based on an apportionment of the flow from the individual units.

20. Q: What stack height for point sources should be input to air quality dispersion modeling for the purpose of demonstrating protection of the NAAQS and PSD increments?

A: A discussion of the maximum stack height credit to be used in modeling analyses is provided in the "Guideline for Determination of Good Engineering Practice Stack Height" and provides that the GEP stack height should be used as input to the model assessment. If a source is operating with a less than GEP stack height, then the actual stack height should be input to the model.

21. Q: What stack height should be used for background sources in modeling analyses?

A: The GEP stack height for each background source should be input to the model assessment. If a background source is operating with a less than GEP stack height, then the actual stack height should be input to the model.

22. Q: Can credit for plume merging due to installation of control equipment for total suspended particulate (TSP) matter be allowed when setting the SO_2 limit?

A: To state the question another way, the concern is what impact the merging and installation of control equipment have on the emission limit for another pollutant, and whether the merging occurred before or after July 8, 1985. After July 8, 1985, any exclusion from the definition of "dispersion techniques" applies only to the emission limitation for the pollutant affected by such change in operation and is accompanied by a net reduction in allowable emissions of the pollutant. For example, a source tears down two old stacks and builds one new GEP stack with an electrostatic precipitator (ESP). This results in a net reduction in TSP emissions. This source could model using stack gas characteristics resulting from merging the two gas streams in setting the TSP emission limit, but may not so model and receive the credit for stack merging when evaluating the SO_2 emission limit.

Before July 8, 1985, installation of TSP pollution control equipment generally justifies the merging of the stacks for TSP. However, if a source's emission limitation for SO_2 increased after the merging, then credit would generally not be allowed since it is presumed that the merging was to increase dispersion.

A source with no previous SO_2 emission limit that merges stacks and installs an ESP for TSP control may consider the effects of merging on compliance with the TSP NAAQS but may not use merging to justify setting an SO_2 emission limit less stringent than its actual emission rate before the merging.

23. Q: If, after determining GEP stack height by fluid modeling, dispersion modeling under other than "downwash" meteorological conditions shows that a lower emission limit than that from the fluid model GEP analysis is necessary to meet ambient air quality constraints, should a new stack height be defined for the source?

A: No. GEP stack height is set. Ambient air quality problems predicted by dispersion modeling at the fluid modeled height means that a more stringent emission limit is necessary.

24. Q: Does EPA intend to issue additional guidance on fluid modeling demonstrations?

A: See the attached memo from Joseph A. Tikvart, Chief, Source Receptor Analysis Branch, to David Stonefield, Chief, Policy Development Section, on guidance for a discussion of existing and additional guidance on fluid model demonstrations.

Attachment

cc: Stack Height Contacts
Gerald Emison
Ron Campbell
B. J. Steigerwald

* NOTE: See PN 123-85-09-19-006

UNITED STATES ENVIRONMENTAL PROTECTION AGENCY
Office of Air Quality Planning and Standards
Research Triangle Park, North Carolina 27711

OCT 28 1985

MEMORANDUM

SUBJECT: Implementation of Stack Height Regulations - Exceptions From Restrictions on Credit for Merged Stacks

FROM: Darryl D. Tyler, Director
Control Programs Development Division (MD-15)

TO: Director, Air Management Division
Regions I-X

This guidance has been prepared to address two issues pertaining to credit for merged stacks prior to July 8, 1985. It establishes a procedure that should be used to prepare and to review justifications for merging gas streams for economic or engineering reasons, and to address the presumption that merging was significantly motivated by an intent to gain credit for increased dispersion. Please note that this is guidance; States may submit alternative demonstrations in support of merged stack exemptions if they feel the individual circumstances warrant.

Background

Recent revisions to EPA's stack height regulations place certain restrictions on the degree to which stationary sources may rely on the effects of dispersion techniques when calculating allowable emissions. One such restriction is provided for the merging of gas streams, or combining of stacks. Several exemptions have been provided in the regulation, however. More specifically, 40 CFR Part 51.1(hh)(2)(ii) allows credit under circumstances where:

A. The source owner or operator demonstrates that the facility was originally designed and constructed with such merged gas streams;

B. After July 8, 1985, such merging is part of a change in operation at the facility that includes the installation of pollution controls and is accompanied by a net reduction in the allowable emissions of a pollutant. This exclusion from the definition of "dispersion techniques" shall apply only to the emission limitation for the pollutant affected by such change in operation; or

C. Before July 8, 1985, such merging was part of a change in operation at the facility that included the installation of emissions control equipment or was carried out for sound economic or engineering reasons. Where there was an increase in the federally-approved emission limitation for any

pollutant or, in the event that no emission limitation was in existence prior to the merging, an increase in the quantity of any pollutants actually emitted from existing units prior to the merging, the reviewing agency shall presume that merging was significantly motivated by an intent to gain emissions credit for greater dispersion. Absent a demonstration by the source owner or operator that merging was not significantly motivated by such an intent, the reviewing agency shall deny credit for the effects of such merging in calculating the allowable emissions for the source.

General Requirements

Figure 1 illustrates a framework for evaluating claims for merged stack credit. Because merged gas streams are generally regarded as prohibited dispersion techniques under the regulations, it is incumbent on the State or the source owner or operator to demonstrate that such merging was conducted for sound economic or engineering reasons, and was not significantly motivated by an intent to avoid emission controls. Consequently, the first step should entail a review of State and EPA files to determine the existence of any evidence of intent on the part of the source owner or operator. Information showing that merging was conducted specifically to increase final exhaust gas plume rise serves as a demonstration of dispersion intent that justifies a denial of credit for merged gas streams. Demonstrations that merging was carried out for sound economic or engineering reasons are expected to show that either the benefits of merging due to reduced construction and maintenance costs outweigh the benefits relating to lower emission control costs or that relevant engineering considerations showed the merging to be clearly superior to other configurations.

Demonstration Requirements

Several exemptions from prohibitions on gas stream merging are provided for existing sources in the stack height regulations:

1- where sources constructed their stacks before December 31, 1970,

2- where the total facility-wide emissions from the source do not exceed 5,000 tons per year,

3- where the facility was originally designed and constructed with merged gas streams, and

4- where the merging was part of a change in facility operation that included the installation of pollution control equipment and resulted in no increase in the allowable emissions of any pollutant.* Where there was an increase in emissions in conjunction with the merging and installation of control equipment, the regulations require that source owners also make an affirmative demonstration that the merging was not motivated by dispersive intent.

*Where there was no federally-approved emission limit prior to merging gas streams, there must be no increase in the actual emissions of any pollutant. Moreover, it is incumbent on the State to demonstrate that there was a logical relationship between the merging of existing gas streams and the installation of controls.

Sources that are not covered under these criteria may still qualify for exemption if they can show that merging was conducted for sound economic or engineering reasons. Such demonstrations should include justifications for having replaced existing stacks. This may be done, for instance, by documenting through maintenance records, correspondence, or other contemporaneous evidence, that the existing stacks had reached the end of their useful life, were prematurely corroded, had sustained other damage making them unservicable, were of a height less than that regarded as good engineering practice, thereby causing downwash problems, or that the addition of new units at the facility necessitated additional stacks and insufficient land was available. The absence of any evidence supporting the need for stack replacement creates a strong presumption that merging was carried out specifically to avoid the installation of pollution controls, i.e., was "significantly motivated by an intent to gain emissions credit for increased dispersion."

No Increase in Allowable Emissions

Once this initial criterion is satisfied, demonstrations may show that merging was based either on sound economic or sound engineering reasons. Claims based on strict engineering justifications may be more difficult to show, since the existence of more than one reasonable engineering solution generally leads to a decision based on economics. However, if it can be documented that the merged stack configuration was clearly superior to other stack configurations for purely engineering reasons, without consideration of cost, then credit for merging may be granted.

In order to most reliably implement the provisions of the regulations regarding the merging of gas streams for sound economic reasons, it would be necessary to ascertain the actual intent of the source owner or operator at the time the decision was made to merge gas streams. Recognizing that the difficulty of doing so was the basis for EPA's rejection of an "intent test" in the rule, the following approach provides a surrogate demonstration of intent. This approach is summarized in Figure 2.

Because the potential savings attributable to the avoidance of pollution controls can significantly influence decisions to merge stacks, one way to show the absence of dispersion intent is to conduct an analysis of the annualized capital and maintenance costs for merged stacks and for individual stacks, and compare the results to the compliance costs (fuel and operation and maintenance of any control equipment) calculated based on the emission limitations derived with and without merged stack credit. If, when the difference in capital and maintenance costs is compared with the difference in compliance costs over the period of capital amortization, the capital and maintenance cost saving is greater than the compliance cost saving, then merging can be accepted as having a sound economic basis.

In establishing this rule of thumb, we are aware that a benefit of as little as 10-20 percent could be considered "significant" in the context of the court's holding on this matter--i.e., such a benefit could have been considered to be a relevant factor in decisions to construct merged stacks.

However, recognizing that documentation of cost analyses after an extended period of time--up to 15 years--is likely to be limited, we believe that the 50 percent test articulated above would constitute a more reasonable basis for initial determinations (that is, a level at which we believe that there was likely a significant incentive to merge stacks to avoid control requirements).

Affirmative Demonstrations of Nondispersion Intent

In some instances, a State or emission source owner may not be able to make a demonstration as described above, or believe that sound economic reasons existed for merging stacks, regardless of the relationship between financial savings attributable to reduced emission control requirements versus lower stack construction cost. In such cases, an opportunity should be provided to affirmatively demonstrate that merged stacks were not "significantly motivated by an intent to obtain emissions credit for increased dispersion." The burden of proof rests solely with source owners or operators attempting to make this showing.

Demonstrations may rely on any relevant evidence, including but not limited to the following:

- construction permits, or permits to operate from pollution control agencies
- correspondence between the source owner or operator and government agencies
- engineering reports relating to the facility
- facility records
- affidavits
- any other relevant materials

For instance, such a demonstration could be made by submitting documentary or other evidence (e.g., internal company memoranda presenting the alternative construction opportunities available to the company) that indicates the intent of the source owner or operator and shows that consideration of dispersion advantages was conspicuously absent.

Alternatively, it might be shown that either action by the State in approving a revised emission limit followed actual merging sufficiently later in time to suggest that dispersion credit was not considered by the source at the time of merging or the State approved limit was unrelated to the merging.

In attempting to make demonstrations, source owners or operators should present as much evidence as can be located, with the understanding that demonstrations based on any single category of evidence (such as affidavits) presented in isolation are less likely to constitute acceptable showings than demonstrations based on cumulative bodies of evidence.

As discussed below, affirmative showings will be required of sources whose merged stacks were associated with an increase in allowable emissions as well as some sources whose mergers were not associated with such

increases. However, EPA expects sources whose emission limits increased subsequent to the merging to present stronger showings than those with no increase, since the regulatory definition of "dispersion technique" views such increases as an explicit indication that the merged stacks were significantly motivated by an intent to gain credit for increased dispersion. Sources who do not increase their emissions, but who have difficulty making other demonstrations, such as the installation of pollution controls, or merging for sound economic or engineering reasons convey a more implicit indication of dispersion intent that must be rebutted; for such sources, however, the presumption of intent is not as compelling.

Increases in Allowable Emissions

As stated above, in cases where the allowable emissions of any pollutant increased in conjunction with the merging of gas streams, such an increase provides even stronger circumstantial evidence that merging was not carried out for sound economic or engineering reasons, but was "significantly motivated by an intent to gain emissions credit for greater dispersion." This presumption may be rebutted by making one of the following demonstrations.

1- by showing that the cost savings associated with reduced compliance costs for merged stacks are less than 50 percent of the total savings due to merged stacks (i.e., annual compliance savings plus annualized capital and maintenance savings), and by making an affirmative showing, as described above, that there was no significant motivation to gain credit for the increased dispersion provided by merged stacks; or

2- by showing that alternatives to stack merging were reasonably precluded strictly for engineering reasons, and by affirmatively demonstrating the absence of significant dispersion intent, as noted above.

In the absence of such a showing, it should be presumed that avoidance of emissions control was a significant factor in the decision to merge gas streams, and credit should be denied.

If you or your staff have any questions regarding the application of this guidance in specific instances, please contact Eric Ginsburg at (FTS) 629-5540 or Sharon Reinders at (FTS) 629-5526.

Attachments

FIGURE 1

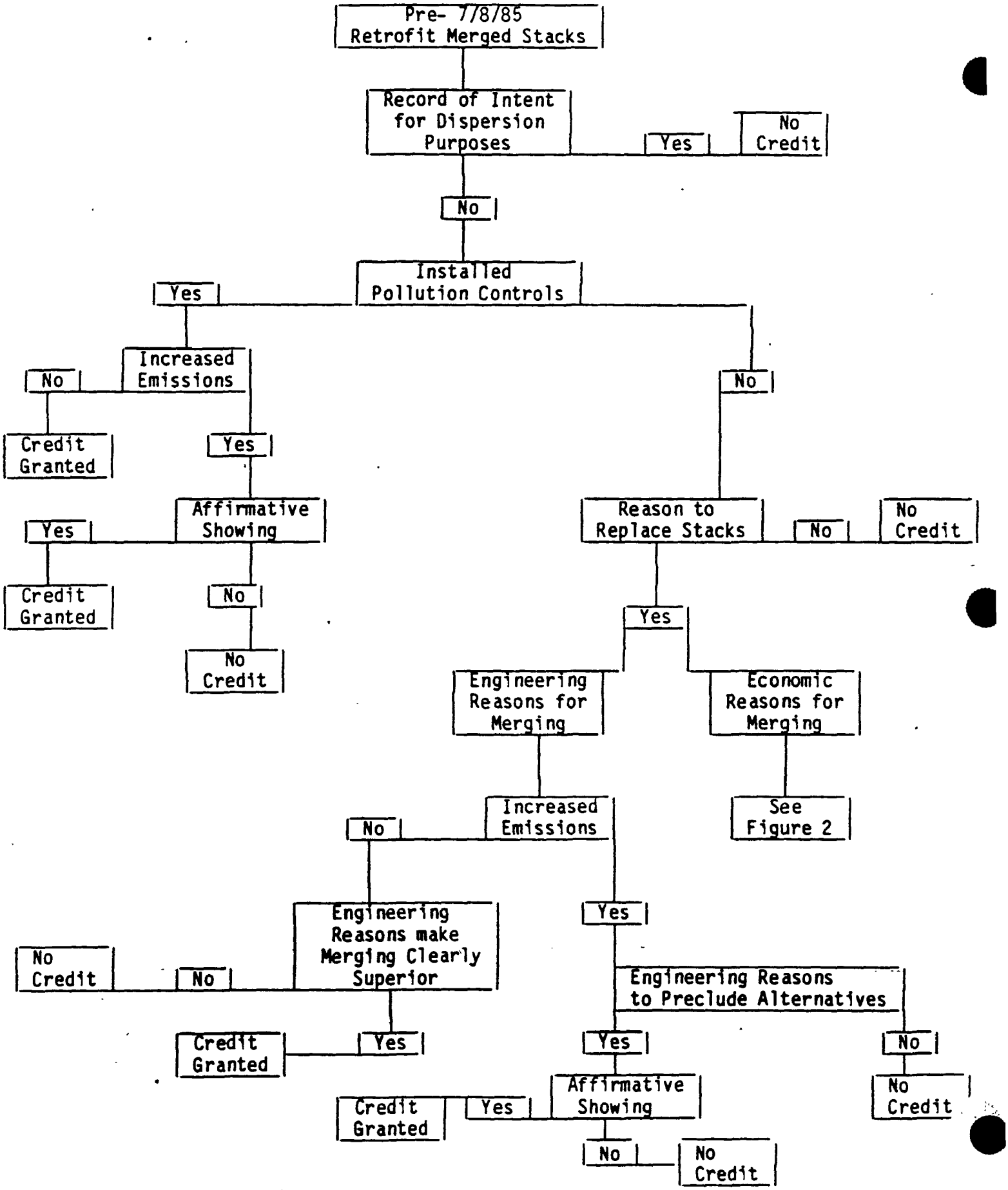
Pre- 7/8/85 Retrofit Merged Stacks
Record of Intent for Dispersion Purposes
Yes
No Credit
No
Installed Pollution Controls
Yes
Increased Emissions
No
Credit Granted
Yes
Affirmative Showing
Yes
Credit Granted
No
No Credit
No
Reason to Replace Stacks
No
No Credit
Yes
Engineering Reasons for Merging
Economic Reasons for Merging
See Figure 2
Increased Emissions
No
Engineering Reasons make Merging Clearly Superior
No
No Credit
Credit Granted
Yes
Yes
Engineering Reasons to Preclude Alternatives
Yes
No
Affirmative Showing
Credit Granted
Yes
No
No Credit
No Credit

Figure 2

Economic Justification

for Merged Stacks

Savings due to Avoidance of More Stringent Emission Limit	No Increase In Emissions	Increase In Emissions
Less than 50% of Total Savings due to Merged Stack Construction	Credit Granted	Affirmative Showing
Exceed 50% of Total Savings due to Merged Stack Construction	Affirmative Showing	No Credit

UNITED STATES ENVIRONMENTAL PROTECTION AGENCY
Office of Air Quality Planning and Standards
Research Triangle Park, North Carolina 27711

OCT 28 1985

MEMORANDUM

SUBJECT: Implementation of Stack Height Regulations - Presumptive NSPS Emission Limit for Fluid Modeling Stacks Above Formula GEP Height

FROM: Darryl D. Tyler, Director
Control Programs Development Division (MD-15)

TO: Director, Air Management Division
Regions I-X

The following guidance is provided to explain the general emission control requirements for sources conducting fluid modeling to justify stack height in excess of that provided by the GEP formulae. While some of the discussion and examples contained herein focus on utility sources, the procedures outlined in this memorandum are generally applicable to all stationary source categories. Please note that this is guidance. States may present any other demonstrations that they may feel are warranted in individual circumstances.

Background

The revised stack height regulations published on July 8, 1985, define three methods for determining good engineering practice (GEP) stack height. These methods include:

1- a 65 meter de minimis GEP height;

2- the height determined by using an applicable formula based on the dimensions of nearby buildings; and

3- the height necessary to avoid excessive concentrations due to downwash as shown using a field study or fluid modeling demonstration.

As the preamble to the regulations points out, the revised definition of "excessive concentrations," a 40-percent increase in concentrations due to downwash resulting in a NAAQS or PSD increment exceedance, necessitates that an emission rate be specified for purposes of evaluating fluid modeling. The regulations require that a presumptive emission rate equivalent to the new source performance standards (NSPS) be established for the source in question before modeling may be conducted to determine

stack height needed to avoid excessive concentrations due to downwash.* This emission rate is described as "presumptive" because it is EPA's presumption that all sources seeking to justify stack heights exceeding those provided by the GEP formulae are capable of controlling their emissions to NSPS levels. However, the regulations also allow source owners or operators to rebut this presumption, establishing an alternative emission rate that represents the most stringent level of control that can feasibly be met by that source in excess of the NSPS level. In the preamble to the regulations, EPA indicated that it will rely on the "Guidelines for Determination of Best Available Retrofit Technology for Coal-Fired Power Plants and other Existing Stationary Facilities, EPA-450/3-80-009b" (BART Guidelines) when reviewing these rebuttals.

If it is infeasible for a source to control its emissions to NSPS levels, then an alternative limit representing the lowest feasible emission limit must be met before obtaining credit for stack height in excess of GEP formula height. Sources may consider such factors as remaining plant life and the cost of modifying existing equipment when determining NSPS feasibility.

Procedures

The general procedure that is described in the BART Guidelines for analyzing control alternatives should be followed to identify and evaluate alternatives for sources seeking credit for stack heights in excess of those produced by the applicable GEP formulae. Because the guidelines were originally written to address visibility impairment, however, not all of the analytical steps or applicability criteria--such as analysis of visibility impairment or exemptions for power plants below 750 megawatts--will be appropriate, and need not be addressed.

General steps in the analysis described in Section 2.0 of the guidelines can be summarized as follows.

1. Identify a range of control alternatives, including both pre- and post-combustion controls. In this regard, several fuel substitution and alternative fuel blends should be considered, as well as technological alternatives, such as coal cleaning and flue gas desulfurization.

2. Calculate the cost, emissions, and other environmental and energy impacts of the alternatives (including those meeting NSPS objectives).

3. Select the alternative that represents the most stringent level of emissions control feasible.

---

*Where the NSPS has been subject to revision, and the source in question is not subject to the revised NSPS, the earliest standard will be applied; e.g., for power plants a rate of 1.2 lb/mmBtu would be used.

In performing these analyses, it is important to keep in mind that EPA's presumption is that the NSPS emission limit is feasible unless demonstrated otherwise. When carrying out evaluations, source owners or operators may consider such factors as remaining useful plant life, the remaining life of any equipment affected by revised emission rates (including any control equipment), the cost of modifying boilers, control equipment, and fuel handling facilities, and the cost of modifying or cancelling existing fuel supply contracts (remaining useful plant life, if a significant factor in determining NSPS feasibility, may necessitate restrictions on the period of applicability of less stringent emission limits). Finally, it is important to analyze, not only a range of alternative controls, but several combinations of alternatives, since such combinations may yield a greater and more cost-effective degree of emissions control.

Since determinations of the adequacy of any rebuttals of the NSPS emission limit and the reasonableness of control alternatives considered must be made on a case-by-case basis, and will be subject to public review and comment during the rulemaking process, all technical and economic analyses, as well as any claims of infeasibility, must be fully documented and supported by any information that may be available.

If you have any questions regarding the application of this guidance in a particular set of circumstances, please contact Eric Ginsburg at (FTS) 629-5540 or Sharon Reinders at (FTS) 629-5526.

UNITED STATES ENVIRONMENTAL PROTECTION AGENCY
Office of Air Quality Planning and Standards
Research Triangle Park, North Carolina 27711

OCT 28 1985

MEMORANDUM

SUBJECT: Determining Stack Heights "In Existence" Before December 31, 1970

FROM: Darryl D. Tyler, Director
Control Programs Development Division (MD-15)

TO: Director, Air Management Division
Regions I-X

The following guidance is provided to describe how the definition of "in existence" should be implemented and to assist States and emission source owners and operators in providing appropriate evidence of commitments to undertake stack construction on or before December 31, 1970. Please note that this is guidance; States may submit alternative demonstrations in support of grandfathering claims, if they feel the circumstances warrant.

We intend to rely on the general provisions of this guidance to determine eligibility for grandfathering exemptions from certain other provisions of the revised stack height regulations: restrictions on the use of GEP formulae for cooling towers, use of the refined GEP formula, fluid modeling to justify GEP formula stack height, credit for merged stacks, credit for new sources tied into grandfathered stacks, and credit for stacks raised to GEP formula height.

Background

Section 123 of the Clean Air Act, as amended, contains a grandfather clause intended to exempt stack heights and techniques for pollutant dispersion that were in existence on or before December 31, 1970, from general provisions of Section 123 restricting the degree to which emission limitations may be affected by dispersion. When EPA promulgated stack height regulations pursuant to Section 123 in 1982, it adopted a definition of "stack heights in existence before December 31, 1970." This definition allowed the grandfathering of stacks on which construction had not yet commenced, but for which binding contracts had been signed that could not be modified or cancelled without substantial loss to the owner or operator. The EPA's definition was upheld by the U.S. Court of Appeals for the D.C. Circuit in Sierra Club v. EPA, 719 F.2d 436, and has not been modified in any way by the rule revisions promulgated on July 8, 1985, except to restrict its applicability to facilities that have not undertaken major modifications or reconstruction, and have not ducted the effluent gas streams from post-1970 units into pre-1971 stacks.

Subsequent to the recent revisions, questions have been raised about how the definition should be implemented, i.e., what EPA should consider to be a binding contract, and what should constitute a "substantial loss" for determining whether a stack should be grandfathered.

General Provisions

The burden of proof for showing that a stack is eligible for grandfathering exemption lies with either the State or the source owner or operator, as appropriate, and documentation in support of exemptions must be made available for public review during the rulemaking process. In the event that no case for exemption under this provision is made, or that satisfactory support for such a request is not provided, the stack is presumed not to be grandfathered, and therefore subject to the requirements of Section 123 and the stack height regulations promulgated by EPA.

Grandfathering exemptions may be supported in one of three ways: by showing that the stack was completed or was physically in existence prior to December 31, 1970; by showing that actual on-site continuous stack construction activities began on or before December 31, 1970; or by showing that a binding contract for stack construction was executed on or before that date.

Documenting Stack Construction

In cases where a stack was completed prior to December 31, 1970, the State may make a summary determination that the stack is grandfathered, but must provide an explanation of the reasons for its determination. One way in which it can be documented that the stack was physically in place before December 31, 1970, is to provide a copy of the 1970 Federal Power Commission report Form 67, which includes stack height, among other information. Evidence that may be submitted to support the date of commencement of stack construction can include virtually any contemporaneous documentation that clearly indicates that construction activities were under way as of December 31, 1970. This could consist of building inspection records, construction materials delivery receipts, correspondence, inter-office memoranda, photographic records, or news clippings. In the event that documentation is lacking or weak, EPA will consider affidavits which include detailed descriptions of efforts that were undertaken to obtain contemporaneous supporting documentation.

Documenting Contractual Obligations

The date of signature on a contract for stack construction will be acceptable for applying grandfathering exemptions if the contract itself meets certain minimum qualifications. A "binding contract," under the previously-discussed provisions is considered to be one that commits the source owner or operator financially to undertake stack construction and that did not have in effect on December 31, 1970, an "escape" provision that allows cancellation by the owner or operator without penalty.

In the event that a contract contains provisions for assessing penalties for modification or cancellation by the owner or operator, and those provisions were in effect on December 31, 1970, then the provisions must be reviewed to determine whether the penalties and other costs of cancellation would have imposed a "substantial loss" on the owner or operator. For new facilities, EPA will presume that a substantial loss would have resulted where the penalties exceed ten percent of the project cost. Where the project involves only stack construction or replacement, EPA will review claims on a case-by-case basis.

If a contract does not contain provisions which impose financial obligations on the owner or operator for contract modification or cancellation, then any determinations of whether liability to the owner or operator resulting from such modification would constitute substantial losses must be made on a case-by-case basis. In general, EPA's rule of thumb relying on ten percent of the project cost will be used.

If you have any questions regarding application of this guidance in specific instances, please contact Eric Ginsburg at (FTS) 629-5540 or Sharon Reinders and (FTS) 629-5526.

UNITED STATES ENVIRONMENTAL PROTECTION AGENCY
Office of Air Quality Planning and Standards
Research Triangle Park, North Carolina 27711

22 JAN 1986

William F. O'Keefe, Vice President
American Petroleum Institute
1220 L Street Northwest
Washington, D. C. 20005

Dear Mr. O'Keefe:

Mr. Elkins has asked me to respond to your letter of December 18, 1985, in which you perceive a change in our policy with regard to the location of receptors for air quality dispersion modeling.

Let me assure you there is no change in our long-standing national policy with regard to the definition of ambient air. That policy is based on 40 CFR Part 50.1 (e) which defines ambient air as ". . . that portion of the atmosphere, external to buildings, to which the general public has access." A letter dated December 19, 1980, from Douglas Costle to Senator Jennings Randolph, reaffirmed and clarified this definition by stating the exemption from ambient air is available only for the atmosphere over land owned or controlled by the source and to which public access is precluded by a fence or other physical barriers. A copy of Mr. Costle's letter is enclosed. The codified definition plus the 1980 clarification essentially constitute the national policy on ambient air.

The Regional Meteorologists' memorandum to which you refer does not imply any change in this national policy and simply harmonizes modeling procedures with our long-standing policy. It is intended to ensure consistent Regional implementation of that policy and to dispel any questions about pollutant concentrations at locations where the general public has access.

Thus, since the Regional Meteorologists' memorandum does not imply any change in our policy, I do not believe there is any need for policy review at this time.

Sincerely,

Gerald A. Emison
Director
Office of Air Quality Planning
and Standards

Enclosure

cc: W. Quanstrom
C. Elkins

UNITED STATES ENVIRONMENTAL PROTECTION AGENCY
Office of Air Quality Planning and Standards
Research Triangle Park, North Carolina 27711

FEB 11 1986

MEMORANDUM

SUBJECT: Clarification of Existing Guidance on Dispersion Modeling Requirements for Plants With "Tall Stacks" and Other Prohibited Dispersion Techniques

FROM: Darryl D. Tyler, Director
Control Programs Development Division (MD-15)

TO: Director, Air Division, Regions I-X

The purpose of this memo is to clarify EPA's guidance on the dispersion analysis requirements that are necessary to implement the revised stack height regulations (see EPA's Stack Height Workshop Manual dated October 1985) and, second, to respond to questions on whether dispersion modeling is required in the context of checking for prohibited dispersion credit if a source's emission limitation was not developed by means of a case-specific dispersion analysis.

In cases where stack height credit and/or dispersion credit changes and a dispersion analysis has been performed in any context, that analysis must to be reviewed to determine if the model inputs reflect credit for stack height(s) above good engineering practice (GEP) or any other prohibited dispersion technique(s). (Review of the model inputs applies to both the specific source(s) for which the analysis is conducted and nearby point sources as performed for a new or renewed permit, a new source review/ prevention of significant deterioration national ambient air quality standard attainment or increment analysis, a State plan to propose revision of its federally approved State implementation plan (SIP) emission limitations, justification of the current SIP limitations, or any attainment/nonattainment redesignation(s), etc.)

If the analysis reflects credit for prohibited dispersion techniques, then the source(s) need to be remodeled without the prohibited credit(s) and revised emission limitation established in the event that the analysis shows an attainment or increment problem. If a source's emission limit was established by ambient air quality considerations such as rollback, modeling is required to demonstrate consistency with the stack height

regulation because credit for prohibited dispersion techniques is reflected in the monitored value. If a source has never been analyzed for dispersion, then it is not necessary to conduct a dispersion analysis now.

It is a State responsibility to demonstrate (1) that the SIP limit does not consider the results of dispersion analyses, (2) that the source has never been evaluated for dispersion credit, or (3) that existing or new analyses are consistent with guidance. Regions are encouraged to provide assistance to States in this endeavor if the impacted agency so desires. It is always appropriate for an individual State or Region to request or initiate a modeling analysis where one does not exist if there is reason to believe that a source's emission limitation is inconsistent with the stack height regulations. However, EPA is not calling for an across the board modeling analysis from every source.

Please pass this information along to your States. If you have any questions on implementing this guidance, please call Sharon Reinders at FTS 629-5526 or Eric Ginsburg at FTS 629-5540.

cc: Regional Administrator, Regions I-X
Chief, Air Branch, Region I-X
Regional Stack Height Contact, Regions I-X
R. Brenner
R. Campbell
C. Carter
C. Elkins
G. Emison
T. Helms
D. Rhoads
B. J. Steigerwald
J. Tikvart
P. Wyckoff

models over IMPACT (Sklarew), MESOPLUME, and RTDM (version 3.00). Issues not specifically addressed in the guideline, such as those associated with new methods or techniques will be investigated and future guidance issued, subject to public comment, as necessary.

K. Other Issues

Although the December 7 proposal solicited, in particular, advice and comment on eight issues, several of these topics received little or no comment. Both EPA and the commenters found it easier to include these comments under appropriate sections in the guideline instead of listing these issues separately. Responses to public comments on the eight issues are contained in the Summary of Comments and Responses document (IV–G–28) as follows:

(1) Specific changes to 40 CFR Parts 51 and 52 (no comment received);

(2) Revised format of the guideline (Chapters 1 and 3);

(3) Recommendations for ozone models (Chapter 6);

(4) Proposed changes to preferred models (Chapters 4, 5, and Appendices A and B);

(5) Improving performance evaluations (Chapters 3 and 10);

(6) Modeling uncertainty (Chapter 10);

(7) Degree to which State or local regulatory agencies can have authority to use nonguideline models (Chapters 1 and 3); and

(8) Degree of oversight or approval authority retained by EPA (Chapters 1 and 3).

E.O. 12291

Under Executive Order 12291, EPA must judge whether a rule is "major" and therefore subject to the requirement of a Regulatory Impact Analysis. The Administrator finds this rule not major because it will not have an annual effect on the economy of $100 million or more; it will not result in a major increase in costs or prices; and there will be no significant adverse effects on competition, employment, investment, productivity, innovation or on the ability of U.S.-based enterprises to compete with foreign-based enterprises in domestic or export markets. This regulation will result in no significant environmental or energy impacts. Thus, no Regulatory Impact Analysis was conducted.

Regulatory Flexibility Act

Pursuant to the provisions of 5 U.S.C. 605(b), I hereby certify that the attached rule will not have a significant impact on a substantial number of small entities. This rule merely updates existing technical requirements for air quality modeling analyses required by other Clean Air Act programs (prevention of significant deterioration, new source review, SIP-revisions) and imposes no new regulatory burdens.

Economic Impact Assessment

The requirement for performing an economic impact assessment in section 317 of the Act, 42 U.S.C. 7617, does not apply to this action since the revisions included do not constitute a substantial change in the regulatory burden imposed by the regulation. However, since the guidance includes more sophisticated models, and addresses the use of site-specific data (required under a different section of the PSD regulations), an analysis of the relative costs of using some of the 1978 models and data bases versus the models and data bases specified in the 1980 updated guidance was prepared. This report, "Cost Analysis of Proposed Changes to the Air Quality Modeling Guideline" is available for inspection in Docket A–80–46 at the Central Docket Section whose address is given above, or from the National Technical Information Service as NTIS No. PB 83–112177.

Paperwork Reduction Act

This rule does not contain any information collection requirements subject to review by the Office of Management and Budget (OMB) under the Paperwork Reduction Act of 1980 U.S.C. 3501 *et seq.* EPA has submitted this regulation to OMB for review under Executive Order 12291 and their written comments on the revisions and any EPA responses have been placed in the docket for this proceeding.

List of Subjects

40 CFR Part 51

Administrative practice and procedure, Air pollution control, Intergovernmental relations, Reporting and recordkeeping requirements, Ozone, Sulfur oxides, Nitrogen dioxide, Lead, Particulate matter, Hydrocarbons, Carbon monoxide.

40 CFR Part 52

Air pollution control, Ozone, Sulfur oxides, Nitrogen dioxide, Lead.

This notice of final rulemaking is issued under the authority granted by sections 165(e) and 320 of the Clean Air Act, 42 U.S.C. 7475(e), 7620.

Dated: August 19, 1986.

Lee M. Thomas,

Administrator.

PART 51—REQUIREMENTS FOR PREPARATION ADOPTION AND SUBMITTAL OF IMPLEMENTATION PLANS

Part 51, Chapter I, Title 40 of the Code of Federal Regulations, is amended as follows:

1. The authority citation for Part 51 continues to read as follows:

Authority: 42 U.S.C. 7475(e), 7620.

2. Section 51.24 is amended by revising paragraph (l) to read as follows:

§ 51.24 Prevention of significant deterioration of air quality.

* * * * *

(l) *Air quality models.* The plan shall provide for procedures which specify that—

(1) All estimates of ambient concentrations required under this paragraph shall be based on the applicable air quality models, data bases, and other requirements specified in the "Guideline on Air Quality Models (Revised)" (1986), which is incorporated by reference. It is EPA Publication No. 450/2–78–027R and is for sale from the U.S. Department of Commerce, National Technical Information Service, 5825 Port Royal Road, Springfield, Virginia, 22161. It is also available for inspection at the Office of the Federal Register, Room 8301, 1100 L Street, NW., Washington, DC. This incorporation by reference was approved by the Director of the Federal Register on October 9, 1986. These materials are incorporated as they exist on the date of approval and a notice of any change will be published in the Federal Register.

(2) Where an air quality impact model specified in the "Guideline on Air Quality Models (Revised)" (1986) is inappropriate, the model may be modified or another model substituted. Such a modification or substitution of a model may be made on a case-by-case basis or, where appropriate, on a generic basis for a specific state program. Written approval of the Administrator must be obtained for any modification or substitution. In addition, use of a modified or substituted model must be subject to notice and opportunity for public comment under procedures developed in accordance with paragraph (q) of this section.

PART 52—APPROVAL AND PROMULGATION OF IMPLEMENTATION PLANS

Part 52, Chapter I of Title 40 of the Code of Federal Regulations, is amended as follows:

1. The authority citation for Part 52 continues to read as follows:

Authority: 42 U.S.C. 7475(e), 7620.

2. Section 52.21 is amended by revising paragraph (l) to read as follows:

§ 52.21 Prevention of significant deterioration of air quality.

* * * * *

(l) *Air quality models.* (1) All estimates of ambient concentrations required under this paragraph shall be based on the applicable air quality models, data bases and other requirements specified in the "Guideline on Air Quality Models (Revised)" (1986) which is incorporated by reference. It is EPA publication No. 450/2-78-027R and is for sale from the U.S. Department of Commerce, National Technical Information Service, 5825 Port Royal Road, Springfield, Virginia, 22161. It is also available for inspection at the Office of the Federal Register, Room 8301, 1100 L Street, NW., Washington, DC. This incorporation by reference was approved by the Director of the Federal Register on October 9, 1986. These materials are incorporated as they exist on the date of approval and a notice of any change will be published in the Federal Register.

(2) Where an air quality impact model specified in the Guideline on Air Quality Models (Revised)" (1986) is inappropriate, the model may be modified or another model substituted. Such a modification or substitution of a model may be made on a case-by-case basis or, where appropriate, on a generic basis for a specific state program. Written approval of the Administrator must be obtained for any modification or substitution. In addition, use of a modified or substituted model must be subject to notice and opportunity for public comment under procedures developed in accordance with paragraph (q) of this section.

[FR Doc. 86-19408 Filed 9-8-86; 8:45 am]

BILLING CODE 6560-50-M

federal register

Friday
November 7, 1986

Part III

Environmental Protection Agency

40 CFR Parts 51 and 52

Air Quality Implementation Plans; Restructuring SIP Preparation Regulations; Final Rule

ENVIRONMENTAL PROTECTION AGENCY

40 CFR Parts 51 and 52

[AD-FRL-3044-2]

Air Quality Implementation Plans; Restructuring SIP Preparation Regulations

AGENCY: Environmental Protection Agency (EPA).

ACTION: Final rule.

SUMMARY: This rulemaking restructures and consolidates the existing regulations for the development of State implementation plans (SIP's) to attain the national ambient air quality standards (NAAQS). At present, these regulations are complex, not well organized, and contain many obsolete provisions. The EPA deletes obsolete provisions and rewrites the regulations in a new, shorter, and better organized format. States using the new regulations to prepare SIP's will find them current and easier to follow. The regulations also have a flexible structure into which future requirements can be more easily included.

EFFECTIVE DATE: December 8, 1986.

FOR FURTHER INFORMATION CONTACT: Ted Creekmore or Joseph Sableski, Plans Guidelines Section, MD-15, Environmental Protection Agency, Research Triangle Park, North Carolina 27711, telephone (919) 541-5697 commercial or 629-5697 FTS.

SUPPLEMENTARY INFORMATION:

Background

On October 11, 1983 (48 FR 46152), EPA proposed to restructure and consolidate regulations for the development of SIP's. These regulations are found in 40 CFR Part 51, "Requirements for Preparation, Adoption, and Submittal of Implementation Plans;" and 40 CFR Part 52, "Approval and Promulgation of Implementation Plans."

Since Part 51 was promulgated in 1971, many substantive revisions have been made. Almost every portion has been revised or added to. Revisions have been forced into the existing format, often making the whole regulation more confusing. As a result, users—mainly the State and local air pollution control agencies—have difficulty finding and understanding applicable requirements in the regulations.

Thus, today's action revises the regulations to:

1. Remove obsolete materials and reporting requirements,
2. Condense and clarify complicated and detailed requirements,
3. Develop a structure that would allow users to find easily applicable requirements, and
4. Provide for future requirements and changes.

To accomplish these goals, EPA deletes obsolete materials and restructures the remaining regulations in a new format (shown in Table 1 of this action). The new format provides for better organization and flexibility for adding or changing future SIP requirements. To implement the new format, EPA developed a master plan to restructure 40 CFR Part 51. As shown in Table 1, the new format expands the Part 51 structure to include more topical headings; these will act as guideposts in locating applicable requirements. This is accomplished by having more subparts than currently appear in Part 51. For instance, where now there is only one section for prevention of air pollution episodes (§ 51.16), there will be a whole subpart that contains several sections—one for classification of regions for episode plans, one for levels of significant harm, one for contingency plans, and one for reevaluation of episode plans. Furthermore, the use of section subdivisions below the third order is significantly reduced.

A more extensive discussion of the rulemaking may be found in the October 11, 1983, proposal which may be used as a reference in studying today's rulemaking.

Restructuring Form

This action includes two tables to help identify and explain the restructured sections as follows:

(1) Derivation Table and Master Plan (Table 1). This table shows the origin of each new section and gives the master restructuring plan.

(2) Distribution Table (Table 2). This table indicates where each original section fits into the new restructured format.

Revisions to 40 CFR Part 52 and Other Revisions

This action includes changes in the cross-references to separate provisions of the existing regulations in Part 52 and unrestructured portions of Part 51. The cross-references are made to the same or equivalent provisions in the restructured regulations.

Relationship of Action to Existing SIP's and Nonattainment Requirements

The EPA does not anticipate that this action will have any significant impact on existing SIP's. The EPA is promulgating very few substantive changes to Part 51. The majority of these changes remove material that was intended to serve as guidance to the States in preparing their plans. The EPA does not intend to require States to "clean up" their SIP's by removing or revising outdated material such as original emission inventories. States may make such revisions as their resources permit. Where SIP's refer to the former Part 51 citations, EPA will interpret those citations as referring to the new citations in Part 51 as codified pursuant to this action and as cross-referenced in Table 2. EPA also reminds States of the generally accepted interpretation that a State regulation that references a Federal regulation remains unchanged if the Federal regulation is revised subsequent to adoption of the State regulation.

The EPA also does not anticipate that this action will have any appreciable impact on SIP revisions submitted to meet the requirements of Part D, Title I of the Clean Air Act (Act). Part D contains new requirements for areas which did not attain the standards within the deadlines established by the 1970 amendments. The only regulations EPA has promulgated that incorporate Part D requirements concern new source review. The EPA is not promulgating changes to the new source review rules. For the remaining Part D requirements, EPA issued nonregulatory guidance. It is beyond the scope of the rulemaking to address the provisions of Part D of the Act, and EPA is not incorporating any of this guidance into Part 51 at this time.

Public Comments

Comments were received from 16 sources including individuals, businesses, local governments, and environmental groups. This document provides a summary of responses to major comments. Responses to these as well as other comments may be found in Docket Number A-81-25 listed under IV-F-1.

Definition of Reasonably Available Control Technology (RACT) [§ 51.100(o)]

The existing Part 51 regulations contain only two provisions that use the term "RACT"—namely, §§ 51.13(b) and 51.31(c) [§§ 51.110(c) and 51.341 in the restructured proposal]. Section 51.13(b) establishes a presumption that 3 years is a reasonable time for attainment of a secondary NAAQS if RACT would bring about attainment. Section 51.31(c) allows an extension of the deadline for submission of a SIP for a secondary NAAQS but only upon a showing that more than RACT is necessary for attainment. The Part 51 regulations

maintenance of the NAAQS. Section 51.110(a) states, "Each plan must set forth a control strategy that provides emission reduction necessary for attainment and maintenance of national air quality standards." The section further states that emission reductions must be sufficient to offset future increases in emissions. The EPA believes that these statements do not presuppose that further reductions will be necessary in every case. However, as a clarification, we have revised section 110(a) to explain that the control strategy must provide the degree of emission reduction necessary to attain and maintain the standards, and that the reductions must offset "any" increases that "are expected to" result from growth.

Section 51.118, Additional Provisions for Lead

One commenter stated that their agency has not been reporting data to EPA in hazardous and trace emissions systems (HATREMS) coding forms. The commenter felt that the requirement that lead emissions be submitted on HATREMS coding forms was contrary to our remarks in the proposal when we indicated that we do not need to specify the content or format of point and area source data. The EPA agrees that the regulation need not specify the format for submission of point and area data. The commenter recommended that EPA modify the requirement to at least allow States greater flexibility as to the format for submitting data. Accordingly, we have modified § 51.118(e) to specify that the data should include the information identified in the HATREMS forms, but need not be in the format of those forms.

Subpart H, Prevention of Air Pollution Emergency Episodes

A commenter suggested that EPA revise the propsed § 51.153, "Reevaluation of episode plans," to provide an alternate minimum schedule on which episode plans would be reevaluated. The proposal requires States to reevaluate their priority classification every 5 years to determine if changes are needed. The 5 year review would coincide with EPA's review of an ambient air quality standard or promulgation of a revised standard. If the evaluation indicates in priority classification, the proposal calls for appropriate changes in the emergency episode plan(s) within 1 year after EPA publishes its determination with regard to pollutant reassessment in the Federal Register. The commenter felt the regulation should require reassessment of the priority classification whenever a standard was tightened.

If there is no change tightening the standard after EPA review, the reevaluation should be required every 5 years or after EPA review, whichever is later. After studying this issue further, EPA believes that it is not necessary to specify minimum requirements for States to reevaluate their priority classification and episode plans. Under current legal authority, EPA may require States to revise their episode plans when necessary. Indeed, States should already be periodically reevaluating the adequacy of their episode plans. When an EPA revision to an air quality standard impacts episode planning, EPA will set forth minimal criteria for reevaluations of episode plans at that time. Such changes might include a revision to the significant harm levels or priority classification criteria. Thus, § 51.153(b) is deleted and not included in the promulgation. However, EPA is retaining § 51.153(a) which has a general requirement for periodic reevaluation of priority classification for episode plans and retaining the requirement that the episode plans be revised if the priority classification changes.

One commenter noted that in rewriting the old § 51.3 into Subpart H, the provision that "each region will be classified separately with respect to each of the pollutants considered (Sulfur dioxide . . . ozone)" was deleted. The EPA has added an introduction to clarify the intent of the regulation and has included this phrase.

Subpart I, Review of New Sources and Modifications

A commenter opposed the proposal to drop requirements for States to notify EPA of permitting actions for all minor sources and for all sources outside nonattainment areas [§ 51.161(d)] on the grounds that new source review is a central part of the prevention of significant deterioration (PSD) and the air quality maintenance plan process and that notification is needed for EPA oversight. The provisions governing PSD procedures, § 51.24, require States to notify EPA of permitting actions for major sources outside nonattainment areas. The deletion from § 51.161(d) did not affect those requirements, only the notification requirements for minor sources. However, EPA agrees that where State or local agency review of new or modified minor sources is required, it should be notified of permitting action for such sources. The very fact that such sources are subject to review indicates that it would be appropriate to require that EPA be notified of permitting actions on such sources for oversight purposes. Moreover, a large number of minor sources could have a significant cumulative effect on air quality. Thus, under the authority of sections 110 and 301 of the Act, the proposed § 51.161(d) has been modified so that it now is essentially identical to existing § 51.18(h)(4). Hence, EPA will require reporting of all State permitting actions, as required in the existing SIP regulations.

Appendices

In the October 11, 1983, proposed regulations, EPA proposed deleting several appendices from Part 51 (A through K, M through O, and R) for two reasons. First, EPA stated that the necessary guidance in Part 51 is available from other EPA publications. For example, guidance on emission inventories, monitoring, and diffusion modeling is routinely updated by EPA through guidelines readily available to the public. Guidance issued by EPA is listed in the "Air Programs Reports and Guidelines Index" which includes an index of current technical and guideline documents prepared by EPA over the past several years. The "Air Programs Policy and Guidance Notebook" provides additional guidance materials. Both of these guidelines are distributed to State and local agencies. Copies are available for public inspection and copying at the Public Information Reference Unit at EPA's office in Washington, DC, and at EPA Regional Offices. Secondly, many of the existing appendices are obsolete because EPA policy has changed since their original proposal. Rapid changes in SIP policy and the difficulty in promulgating timely revisions to Part 51 have led EPA to develop guidelines rather than revise the Part 51 appendices. One commenter felt that deleting these appendices will create significant uncertainties about the legally binding effects of EPA guidance. They suggested we update them and remove obsolete material, not delete them.

The EPA believes it would be unduly burdensome to update the appendices. The guidelines are constantly being updated, and some of the appendices would become obsolete in a short period of time. In addition, most of the appendices have performed their function by assisting the States when the initial SIP's were developed. The only major reason for leaving them in Part 51 would be for historical purposes. Finally, publishing guidance in appendices to the regulations would not necessarily make the guidance more legally binding. For these reasons, today's

separately define RACT in § 51.1(o) largely by reference to Appendix B that gives examples of RACT technology. The EPA promulgated both of these provisions and the definition of RACT simultaneously in the early 1970's.

Several years later, EPA used the term RACT in a different context as part of its effort to remedy the widespread persistence of NAAQS violations. In 1976 and then in the months following the enactment of Part D in 1977, EPA stated more elaborate and specific provisions of RACT. The EPA, however, never attempted to incorporate those provisions, nor any of the requirements of Part D relating to existing sources, into the Part 51 regulations.

The proposed definition of RACT was intended only to codify existing policy. It included provisions of RACT from guidance for nonattainment plans (Part D of the Act) because EPA believed this guidance was established and accepted. However, upon reexamination of the proposed definition, EPA has concluded it went too far by attempting to include Part D provisions. The purpose of this rulemaking is merely to streamline and recodify the existing requirements of the Part 51 regulations, not to incorporate parameters of Part D into those regulations. The definition of RACT, therefore, should reflect, as near as possible, only what EPA intended the term to mean originally for the purposes of §§ 51.13(b) and 51.31(c). Thus the definition is changed to read as follows:

"Reasonably available control technology" means devices, systems, process modifications, or other apparatus or techniques that are reasonably available taking into account (1) the necessity of imposing such controls in order to attain and maintain a national ambient air quality standard, (2) the social environmental and economic impact of such controls, and (3) alternative means of providing for attainment and maintenance of such standard. (This provision defines RACT for the purposes of §§ 51.110(c)(2) and 51.341(b) only.)

There was some concern by commenters that the proposed deletion of Appendix B, "Example of Emission Limitation Attainable With Reasonably Available Technology" would affect the application of RACT to various regulatory castegories such as visible emissions. This action in no way affects the application of RACT to any regulatory, industry, or source category. As discussed in the proposed rulemaking, deleting guidance appendices which are frequently changing eliminates the need to constantly update Part 51. The EPA proposed deleting Appendix B because many of the limitations for source categories have changed, and up-to-date RACT guidance on emission limitations for specific sources is available through various guidance documents.

Air Quality Maintenance Provisions

The comments on our suggestions of possible revisions to the air quality maintenance provision indicated that any revisions would be the subject of much controversy. Thus, EPA intends to make no revision to the maintenance regulations of Subpart D in this action except to renumber section references therein, but will consider options for future revisions. The EPA may eventually incorporate Subpart D into Subpart G, "Control strategy." This may involve rewriting Subpart D as part of Subpart G or redesignating Subpart D as a new Subpart Ga.

Section 51.100, Definitions

Commenters suggested revising § 51.100(n)(7) through (9) to better reflect today's transportation plans requirements. They wanted to delete example measures such as "commuter taxes" and "gasoline rationing" since they are unlikely to be implemented. They wanted to revise the term "parking restrictions" and read "preferential parking requirements" in order to shift emphasis from restriction to incentive methods. They suggested other changes such as adding the phrase "and motor vehicle trips" to recognize the need for measures that reduce trips and the related emissions associated with the cold-start and hot-soak modes. Some of the examples of transportation control measures in paragraphs (n)(7) through (9) have largely been superseded by other measures to control emissions from transportation sources. The EPA believes it would be appropriate to replace paragraphs (n)(7) through (9) with a general reference to other transportation control measures. The reference would include those measures listed in section 108(f) of the Act as examples of transportation measures that a State may adopt. The regulations have been modified accordingly.

One commenter recommended changing the definition of transportation control measures at § 51.100(r) to include only highway or transit-related measures on the grounds that measures decreasing emissions from individual motor vehicles, referenced in the existing definition, are actions not under the jurisdiction of Federal or State transportation agencies. The commenter also recommended that the proposed definition be expressed in more general terms. Whether or not measures are under the jurisdiction of a transportation control agency is not a relevant consideration so long as the measure is enforceable by the State. Moreover, EPA believes that the existing definition, which includes "any measure. . ." that is directed toward reducing emissions of air pollutants from transportation sources,. . . ." is sufficiently general. Thus, EPA is retaining the existing definition of "transportation control measure," except that the measures listed in section 108(f) are being referenced as examples rather than including the example measures in the existing regulation.

It was suggested that § 51.100 (s) through (w) should be deleted because the transportation-related terms defined in these sections are no longer used in Appendix M, "Transportation Control Supporting Data Summary," which EPA proposed to delete. The EPA agrees with the commenter and has deleted these paragraphs.

Section 51.104, Revisions

Another commenter suggested EPA amend § 51.104(a) to add a requirement that plans shall be revised when necessary to "otherwise comply with any additional requirements established under the Act as amended in 1977." This language is a quote from section 110(a)(2) H of the Act. The EPA agrees with this comment and has amended section 51.104(a) to track the language of section 110(a)(2)(H). Section 51.104(a) now requires that a plan be revised to take into account a finding by the Administrator that the plan is substantially inadequate to comply with any applicable additional requirements established under the Clean Air Act Amendments of 1977.

A commenter noted that we had proposed to delete § 51.4(b)(8) and stated that this would result in dropping requirements for local planning, transportation, and economic development agencies to be informed of air quality maintenance plan proposals. This section was inadvertently dropped in the proposal and is restored in this rulemaking.

Section 51.110, Attainment and Maintenance of National Standards

One commenter felt that the language in the proposed § 51.110(a) inappropriately presupposes that further emission reductions will be necessary in every case in order to achieve or maintain the national standards, contrary to the existing § 51.12(a), (b). It was EPA's intention to use language similar to § 51.12(a) and to require emissions reductions only to the degree necessary for attainment and

action deletes the appendices as proposed.

Appendix L

A commenter pointed out that the location of a phrase in §§ 1.1(b), 1.1(c), and 1.1(d) of Appendix L is misleading. The phrase appears after "NO_2-," and reads as follows: "NO_2-24-hour average and meteorological conditions are such that pollutant concentrations can be expected to remain at the above levels for twelve (12) or more hours, or in the case of ozone, the situation is likely to recur within the next 24 hours unless control actions are taken." The commenter pointed out that this phrase applies to all five pollutants, not just to NO_2 as its location would imply. Thus, the phrase should be separated from its inclusion under the NO_2 subtitle. The EPA believes the commenter is correct and has made the appropriate clarification in today's action.

Deletion of Reporting Requirements

One commenter opposed deleting the reporting requirements of § 51.326, "Reportable revisions," and § 51.328, "Plan prescribed actions," because they felt each section required a formal report that each citizen could easily read and also provided greater assurance that the information covered by the sections would be made available. The EPA believes that the burden on the States of including in the annual report all substantive plan revisions that otherwise need not be submitted for approval is small and that such information may be useful to EPA and the public. Accordingly, § 51.326 is being retained to ensure that EPA is apprised of all substantive plan revisions as a matter of course. The EPA believes that it would be more appropriate to acquire the information covered by § 51.328 only on an as needed basis through program and grant mechanisms. The commenter has offered no reason as to why a citizen would need the information covered by § 51.328. In any event, a citizen presumably would be able to obtain such information directly from the States. Thus, this action retains § 51.326 and deletes § 51.328.

Other Revisions to the Rulemaking

In our review of the proposal, we determined that several minor changes were necessary to make the regulation read better and to correct inadvertent errors. These changes are listed as follows:

1. The proposal did not redesignate or restructure § 51.12(e) through (i) which refer to maintenance plans because no change in maintenance provisions was proposed. The final action redesignates § 51.12(e) through (i) as § 51.110(h) through (l). No revisions are made in these sections. This redesignation improves the organization of the regulation by including these sections in the new format.

2. The proposal did not redesignate or restructure § 51.24, Prevention of significant deterioration, because EPA intended to do this in a separate rulemaking. The final action redesignates § 51.24 as § 51.166 under the new format in the new source review subpart. No revisions are made to this section. This redesignation improves the organization of the regulation by including § 51.124 in the new format.

3. The EPA noticed a typographical error in § 51.104(b). The first sentence should read, "The State must *revise* the plan within 60 days . . . ." not "The State must *review* the plan, etc." The promulgation corrects this error.

4. The EPA decided that § 51.113(a) is a duplication of § 51.112(b)(1). There is no need for a "procedures" subdivision. Thus, EPA incorporated § 51.113(b) as § 51.112(b)(4) and deleted the proposed § 51.113.

5. The EPA noted that the last two sentences of the proposed § 51.161(d) stated "For pollutants where no designations are established, such as for lead, a copy of the notice is required for all major sources. The definition of a major source for lead is given in § 51.100(k)(2)." In these two sentences, the term "major" was incorrectly proposed and is replaced with the term "point" in this action.

6. The EPA has restructed § 51.260(a)(2) to more closely convey the meaning of existing § 51.15(a). Also, in reviewing § 51.260(a)(3), EPA noted it reads "Categories of other sources" which was inadvertently changed from the original version. Section 51.260(a)(3) should read "Categories of such sources." This revision is made in the final action.

Ongoing Revisions

Several commenters were concerned that we are not restructuring various portions of Part 51 because they are currently undergoing revision. They referred to amendments in § 51.18, "Review of new sources and modifications," proposed on August 25, 1983 (48 FR 38742), and revisions in the stack height provisions (§ 51.164) mandated by the court. Since this restructuring package was proposed, the following Part 51 regulations have been promulgated:

1. 49 FR 43202, October 26, 1984. Regulations adding a new paragraph in § 51.18 involving fugitive emissions of stationary sources.

2. 50 FR 27892, July 8, 1985. Regulations revising §§ 51.1, 51.12, and 51.18 involving stack height provisions.

3. 51 FR 11414, April 2, 1986. Regulations adding new sections in §§ 51.1 and 51.12 involving intermittent control systems.

These provisions have been incorporated into the restructured subparts unchanged as promulgated, except that headings, titles, and numbering have been changed to fit into the new format.

Revisions to Part 52

As mentioned earlier, this action includes nomenclature changes in Part 52 where cross-references to Part 51 are made. In addition, some of the Part 52 provisions are obsolete and are deleted in this action.

Sections 52.828(b) and 52.2878(b) have been rescinded since they concern primarily 1-year extensions for compliance that were allowed under section 110(f) of the Act prior to 1977 Amendments. Section 110(f) affect any authority the States of Iowa and Rhode Island may have to issue any abatement orders that are permitted under the Act as amended in 1977.

Environmental, Economic, and Energy Impact Assessments

Under Executive Order (E.O.) 12291, EPA must judge whether a regulation is major and therefore subject to the requirement of a Regulatory Impact Analysis. This regulation is not major because it will not have an annual effect on the economy of $100 million or more; it will not result in a major increase in costs or prices; and there will be no significant adverse effects on the environment, energy, competition, employment, investment, productivity innovation, or on the ability of U.S.-based enterprises to compete with foreign-based enterprises in domestic or export markets. This regulation was submitted to the Office of Management and Budget (OMB) for review under E.O. 12291. Any comments from OMB and any EPA responses to the comments are available in Docket A-81-25.

Pursuant to the provisions of U.S.C. 605(b), I hereby certify that the attached rule will not have a significant economic impact on small entities because no additional costs will be incurred. This rule does not contain any information collection requirements subject to OMB review under the Paperwork Reduction Act of 1980 U.S.C. 3501 et seq.

Judicial Review

The following regulatory amendments are nationally applicable, and this action is based on determination of nationwide scope and effect. Therefore, under section 367(b)(1) of the Act, judicial review may be sought only in the United States Court of Appeals for the District of Columbia Circuit. Petition for review must be filed on or before January 6, 1987.

TABLE 1.—DERIVATION TABLE AND MASTER PLAN TO RESTRUCTURE 40 CFR PART 51

New designation section No. and title	Old designation section No. and title
Subpart F Procedural Requirements	
51.100 Definitions	51.1 Definitions.
51.101 Stipulations	51.2 Stipulations.
51.102 Public hearings	51.4 Public hearings.
51.103 Submission of plans	51.5 Submission of plans.
51.104 Revisions	51.6 Revisions.
	51.34 Variances.
51.105 Approval of plans	51.8 Approval of plans.
Subpart G Control Strategy	
51.110 Attainment and Maintenance of National Standards	51.10 General requirements (portion).
	51.12 Control strategy: General (portion).
	51.13 Control strategy: SO_x & PM (portion).
	51.14 Control strategy: CO, HC, Ox & NO_x (portion).
	51.80 Demonstration of attainment: Pb (portion).
51.111 Description of control measures	51.14 Control strategy: CO, HC, Ox, & NO_x (portion).
	51.87 Measures: Pb.
51.112 Demonstration of adequacy	51.13 Control strategy: SO_x & PM (portion).
	51.14 Control strategy: CO, HC, Ox, & NO_x (portion).
	51.80 Demonstration of attainment: Pb (portion).
	51.82 Air quality data (portion).
51.113 Time period for demonstration of adequacy	51.10 General requirements (portion).
	51.81 Emissions data: Pb (portion).
51.114 Emissions data and projections	51.13 Control strategy: SO_x & PM (portion).
	51.14 Control strategy: CO, HC, Ox, & NO_x (portion).
	51.81 Emissions data: Pb (portion).
51.115 Air quality data and projections	51.13 Control strategy: SO_x & PM (portion).
	51.14 Control strategy: CO, HC, Ox, & NO_x (portion).
	51.82 Air quality data: Pb (portion).
51.116 Data availability	51.10 General requirements (portion).
	51.88 Data availability: Pb.
51.117 Additional provisions for lead	51.80 Demonstration of attainment: Pb (portion).
	51.81 Emissions data: Pb (portion).
	51.82 Air quality data: Pb (portion).
	51.83 Certain urbanized areas: Pb.
	51.84 Areas around significant point source: Pb.
	51.85 Other areas: Pb.
	51.86 Data bases: Pb (portion).
51.118 Stack height provisions	51.12 Control strategy: General (portion).
51.119 Intermittent control systems	51.12 Control strategy: General (portion).
51.120–51.135 Reserved for new requirements as set forth in the Act	

TABLE 1.—DERIVATION TABLE AND MASTER PLAN TO RESTRUCTURE 40 CFR PART 51—Continued

New designation section No. and title	Old designation section No. and title
51.136–51.140 Reserved for maintenance of PSD increment provisions	
Subpart H Prevention of Air Pollution Emergency Episodes (§§ 51.150 to 51.159)	51.3
	51.16 Classification of regions.
	Prevention of air pollution emergency episodes.
Subpart I Review of New Sources and Modifications (§§ 51.160 to 51.189	51.18
	51.24 Review of new sources and modifications.
	Prevention of significant deterioration.
Subpart J Air Quality Surveillance (§§ 51.190 to 51.209) (Promulgated 5/10/79)	51.17 Air quality surveillance.
Subpart K Source surveillance (§§ 51.210 to 51.229)	51.19 Source surveillance.
Subpart L Legal Authority (§§ 51.230 to 51.239)	51.11 Legal authority.
Subpart M Intergovernmental consultation (§§ 51.240 to 51.259) (Promulgated 8/18/79)	51.21 Intergovernmental cooperation.
Subpart N Compliance Schedules (§§ 51.260 to 51.279)	51.15 Compliance schedules.
Subpart O Miscellaneous Plan Content Requirements	
51.280 Resources	51.20 Resources.
51.281 Copies of rules and regulations	51.22 Rules and regulations.
51.282 Reserved	
51.283 Reserved	
51.284 Public notification (Promulgated 5/10/79)	
Subpart P Visibility protection (§§ 51.300 through 51.319) (Promulgated 12/2/80)	
Subpart Q Reports (§§ 51.320 through 51.339)	51.7 Reports.
Subpart R Extensions (§§ 51.340 through 51.369)	51.30 Request for 2-year extension.
	51.31 Request for 18-month extension.
Revoked	51.1 Definitions (obsolete portions).
	51.3 Classification of regions (as applicable to control strategies).
	51.4 Public hearings (obsolete portions).
	51.5 Submission of plans; preliminary review of plans (obsolete portions).
	51.23 Exceptions.
	51.32 Request for 1-year postponement.
	51.33 Headings and appeals relating to request for one year postponement.
	51.326 Reportable revisions.
	51.328 Plan prescribed actions.
	Appendix A Air quality estimation.
	Appendix B Examples of emission limitations attainable with reasonably available control technology.
	Appendix C Major pollutant source.

TABLE 1.—DERIVATION TABLE AND MASTER PLAN TO RESTRUCTURE 40 CFR PART 51—Continued

New designation section No. and title	Old designation section No. and title
	Appendix D Pollutant emissions inventory summary.
	Appendix E Point source data.
	Appendix F Area source data.
	Appendix G Emission inventory summary.
	Appendix H Air quality data summary.
	Appendix K Control agency functions.
	Appendix M Transportation Control Supporting Data Summary.
	Appendix N Emissions Reductions Achievable Through Inspection, Maintenance and Retrofit of Light Duty Vehicles.
	Appendix O [Untitled].
	Appendix R Agency functions for air quality maintenance area plans.

NA—Not applicable.

TABLE 2.—DISTRIBUTION TABLE

Old section	New section
51.1(a) through (nn) All paragraph designations are the same and have the same paragraph designation except those which are listed below.	51.100(a-nn).
51.1(a)	51.100(a) New citations added.
51.1(j)	51.100(j). Definition of local agency deleted. 51.1 includes two definitions of "local agencies." EPA considers 51.100(g) a better definition. A new 51.100(j) is added which defines the term "plan."
51.1(k)(1)	51.100(k)(1) The term "Volatile Organic Compound" (VOC) replaces the term "Hydrocarbons."
51.1(k)(1)(ii)	51.1 Point source definition updated.
51.1(k)(1)(iii)	Unnecessary. Appendix C is deleted in this action.
51.1(l)	51.1Reference to Appendix D removed; reference to inventory techniques updated.
51.1(m)	51.100(m) revised.
51.1(o)	51.100(o) revised.
51.2	51.101.
51.3	51.50, streamlined.
51.4 All paragraphs are the same and are restructured with the same paragraph numbers except as noted below:	51.102.
51.4(a), (e)	51.102(a); (e) rewritten.
51.4(b)(4)	51.102(b)(4) rewritten.
51.4(b)(6)	Unnecessary, redundant.
51.4(f)	Deleted, obsolete.
51.5 All paragraphs are the same and restructured with the same paragraph numbers except as noted below:	51.103.
51.5(a)	Rewritten; "Note"- deleted.
51.5(d), (e)	Deleted, redundant.
51.6	51.104.
51.6(b) through (f)	51.104 (b) through (f) rewritten.
51.8	51.105.
51.10(a)	51.110(g) rewritten.
51.10(b)	51.110(b); (d);

TABLE 2.—DISTRIBUTION TABLE—Continued

Old section	New section
51.10(c)	51.110(c)(1), (d).
51.10(d)	51.110(e), revised.
51.10(e)	51.116(c).
51.11(a)	51.230.
51.11a(1–6)	51.230(a) through (f): Unnecessary provisions for transportation plans, obsolete.
51.11(b)	51.231(a).
51.11(c)	51.231(b).
51.11(d)(1)	51.231(c).
51.11(d)(2)	51.232(a).
51.11(e)	51.232(b).
51.11(f)	51.110(a).
51.12(a)	51.110(a), (c).
51.12(b)	Deleted; redundant.
51.12(c)	51.110(f).
51.12(d)	51.110(h).
51.12(e)	51.110(i).
51.12(f)	51.110(j).
51.12(g)	51.110(k).
51.12(h)	51.110(l).
51.12(i)	51.118(a).
51.12(j)	51.118(b).
51.12(k)	51.118(c).
51.12(l)	51.119(a).
51.12(m)	51.119(b).
51.12(n)	51.110(b).
51.13(a)	51.110(e).
51.13(b)	51.115(c).
51.13(c)	Deleted, example region approach.
51.13(d)	Deleted, example region approach.
51.13(e)(1) phrase "in the example regions to which it applies."	51.112(a): Air Programs Reports and Guidelines Index.
Rest of 51.13(e)(1)	51.112(a) and (b).
51.13(e)(2)(i,ii)	51.112(b)(4), Air Programs Reports and Guidelines Index.
51.13(e)(2)(iii)	51.114(a).
51.13(e)(3)(i)	51.112(b)(3), rewritten.
51.13(e)(3)(ii)	51.114(a); 51.115(a) Portions related to example region approach deleted.
51.13(e)(3)(iii)	51.110(a), Rewritten, reference to priority of regions deleted.
51.13(f,g)	51.111. Unnecessary.
51.14(a)(1)	51.112(a). Air Programs Reports and Guidelines Index.
51.14(a)(2)	51.112(a).
51.14(b)	51.112(b)(4).
51.14(c)(1)	51.115(d).
51.14(c)(2) and (5) through (7)	Reference to hydrocarbon standard which has been revoked, deleted.
51.14(c)(5)	51.114(a).
51.14(c)(6)	51.115.
51.14(c)(8)	Air Programs Reports and Guidelines Index.
51.14(c)(9)	Obsolete.
51.14(d)	Air Programs Reports and Guidelines Index.
51.14(e)	51.280(a), (b).
51.14(f)	51.281(a).
51.14(g)	51.281(b).
51.14(h)	51.285(a).
51.15(a)(1)	51.151.
51.15(b)(1)	51.152(a).
51.15(b)(2)	Deleted, obvious.
51.15(c)	51.152(b).
51.16(a)	Obsolete.
51.16(b)	51.152(c).
51.16(d)	51.152(d).
51.16(e)	51.160(a).
51.16(f)	51.160(b).
51.16(g)	51.160(c).
51.16(h)	51.160(d).
51.18(a)	51.152.
51.18(b)	51.160(e).
51.18(c)	51.162.
51.18(d)	51.163.
51.18(e)	51.164.
51.18(f)	51.165.
51.18(g)	51.166.
51.18(h)	51.181.

TABLE 2.—DISTRIBUTION TABLE—Continued

Old section	New section
51.18(i)	Obsolete, refers to Appendix O, guidance on indirect source review.
51.18(j)	51.165(a).
51.18(k)	51.165(b).
51.18(l)	51.164.
51.19 (introduction)	51.210.
51.19(a)	51.211.
51.19(b), (c)	51.212.
51.19(d)	51.213.
51.19(e)	51.214(a).
51.19(e)(1)	51.214(b).
51.19(e)(2)	51.214(c).
51.19(e)(3)	51.214(d).
51.19(e)(4)	51.214(e).
51.19(e)(5)	51.214(f).
51.19e(6)	Obsolete, deleted.
51.20	51.280.
51.22	51.281.
51.23	Unnecessary.
51.24	51.166.
51.30	51.340.
51.31	51.341.
51.32	Deleted, no longer in Clean Air Act (CAA).
51.33	Deleted, no longer in CAA.
51.34	51.104(g).
51.80(a)	51.110(b), 51.118(a).
51.80(b)	51.112(a).
51.80(c)	51.112(b).
51.81(a)	51.117(a).
51.81(b)	51.113(a).
51.81(c)	51.112(b)(1).
51.81(d)	51.114(c).
51.82(a)	51.115(b), 51.117(d)(1).
51.82(b)	51.117(b)(3).
51.82(c)	51.112(b)(3).
51.83	51.117(c)(1).
51.84	51.117(a), (c)(2).
51.85	51.117(c)(3).
51.86(a)	51.112(b)(5).
51.86(b)	51.117(e)(2).
51.86(c)	51.117(d)(1,2).
51.87	51.111.
51.88	51.116(a), (b).
51.326, 51.328	Deleted, report requirement no longer needed.

List of Subjects

40 CFR Part 51

Administrative practice and procedure, Air pollution control, Intergovernmental relations, Reporting and recordkeeping requirements, Ozone, Sulfur oxides, Nitrogen dioxide, Lead, Particulate matter, Hydrocarbon, Carbon monoxide.

40 CFR Part 52

Air pollution control, Ozone, Sulfur Oxides, Nitrogen dioxide, lead, Particulate matter, Carbon monoxide, Hydrocarbons.

Dated: October 6, 1986.

Lee M. Thomas,

Administrator.

PART 51—REQUIREMENTS FOR PREPARATION, ADOPTION, AND SUBMITTAL OF IMPLEMENTATION PLANS

EPA amends Title 40, Chapter I, Part 51, of the Code of Federal Regulations as follows:

1. The authority citation for Part 51 continues to read as follows:

Authority: Sec. 110, 301(a) of the Clean Air Act as amended, 42 U.S.C. 7410, 7601(a).

2. Whenever the term "hydrocarbon(s)" appears in Part 51 it is changed to read "VOC(s)".

Subpart A (§§ 51.1–51.8)—[Removed and Reserved]

3. Subpart A (consisting of §§ 51.1 through 51.8) is removed and reserved.

Subpart B—[Reserved]

4. In Subpart B, § 51.12 (e) through (i) are redesignated as § 51.110 (h) through (l), § 51.24 is redesignated as § 51.166 (under Subpart I), and §§ 51.10 through 51.23 are removed and reserved.

Subpart C (§§ 51.30–51.34)—[Removed and Reserved]

5. Subpart C (consisting of §§ 51.30 through 51.34) is removed and reserved.

Subpart E (§§ 51.80–51.88)—[Removed and Reserved]

6. Subpart E (consisting of §§ 51.80 through 51.88) is removed and reserved.

7. Subpart F (consisting of §§ 51.100 through 51.105) is added to read as follows:

Subpart F—Procedural Requirements

Sec.

51.100 Definitions.
51.101 Stipulations.
51.102 Public hearings.
51.103 Submission of plans; preliminary review of plans.
51.104 Revisions.
51.105 Approval of plans.

Subpart F—Procedural Requirements

§ 51.100 Definitions.

As used in this part, all terms not defined herein will have the meaning given them in the Act:

(a) "Act" means the Clean Air Act (42 U.S.C. 7401 *et seq.*, as amended by Pub. L. 91–604, 84 Stat. 1676 Pub. L. 95–95, 91 Stat., 685 and Pub. L. 95–190, 91 Stat., 1399.)

(b) "Administrator" means the Administrator of the Environmental Protection Agency (EPA) or an authorized representative.

(c) "Primary standard" means a national primary ambient air quality standard promulgated pursuant to section 109 of the Act.

(d) "Secondary standard" means a national secondary ambient air quality standard promulgated pursuant to section 109 of the Act.

(e) "National standard" means either a primary or secondary standard.

(f) "Owner or operator" means any person who owns, leases, operates, controls, or supervises a facility, building, structure, or installation which directly or indirectly result or may result in emissions of any air pollutant for which a national standard is in effect.

(g) "Local agency" means any local government agency other than the State agency, which is charged with responsibility for carrying out a portion of the plan.

(h) "Regional Office" means one of the ten (10) EPA Regional Offices.

(i) "State agency" means the air pollution control agency primarily responsible for development and implementation of a plan under the Act.

(j) "Plan" means an implementation plan approved or promulgated under section 110 of 172 of the Act.

(k) "Point source" means the following:

(1) For particulate matter, sulfur oxides, carbon monoxide, volatile organic compounds (VOC) and nitrogen dioxide—

(i) Any stationary source the actual emissions of which are in excess of 90.7 metric tons (100 tons) per year of the pollutant in a region containing an area whose 1980 "urban place" population, as defined by the U.S. Bureau of the Census, was equal to or greater than 1 million.

(ii) Any stationary source the actual emissions of which are in excess of 22.7 metric tons (25 tons) per year of the pollutant in a region containing an area whose 1980 "urban place" population, as defined by the U.S. Bureau of the Census, was less than 1 million; or

(2) For lead or lead compounds measured as elemental lead, any stationary source that actually emits a total of 4.5 metric tons (5 tons) per year or more.

(l) "Area source" means any small residential, governmental, institutional, commercial, or industrial fuel combustion operations; onsite solid waste disposal facility; motor vehicles, aircraft vessels, or other transportation facilities or other miscellaneous sources identified through inventory techniques similar to those described in the "AEROS Manual series, Vol. II AEROS User's Manual," EPA-450/2-78-029 December 1978.

(m) "Region" means an area designated as an air quality control region (AQCR) under section 107(c) of the Act.

(n) "Control strategy" means a combination of measures designated to achieve the aggregate reduction of emissions necessary for attainment and maintenance of national standards including, but not limited to, measures such as:

(1) Emission limitations.

(2) Federal or State emission charges or taxes or other economic incentives or disincentives.

(3) Closing or relocation of residential, commercial, or industrial facilities.

(4) Changes in schedules or methods of operation of commercial or industrial facilities or transportation systems, including, but not limited to, short-term changes made in accordance with standby plans.

(5) Periodic inspection and testing of motor vehicle emission control systems, at such time as the Administrator determines that such programs are feasible and practicable.

(6) Emission control measures applicable to in-use motor vehicles, including, but not limited to, measures such as mandatory maintenance, installation of emission control devices, and conversion to gaseous fuels.

(7) Any transportation control measure including those transportation measures listed in section 108(f) of the Clean Air Act as amended.

(8) Any variation of, or alternative to any measure delineated herein.

(9) Control or prohibition of a fuel or fuel additive used in motor vehicles, if such control or prohibition is necessary to achieve a national primary or seconary air quality standard and is approved by the Administrator under section 211(c)(4)(C) of the Act.

(o) "Reasonably available control technology" (RACT) means devices, systems process modifications, or other apparatus or techniques that are reasonably available taking into account (1) the necessity of imposing such controls in order to attain and maintain a national ambient air quality standard, (2) the social, environmental and economic impact of such controls, and (3) alternative means of providing for attainment and maintenance of such standard. (This provision defines RACT for the purposes of §§ 51.110(c)(2) and 51.341(b) only.)

(p) "Compliance schedule" means the date or dates by which a source or category of sources is required to comply with specific emission limitations contained in an implementation plan and with any increments of progress toward such compliance.

(q) "Increments of progress" means steps toward compliance which will be taken by a specific source, including:

(1) Date of submittal of the source's final control plan to the appropriate air pollution control agency;

(2) Date by which contracts for emission control systems or process modifications will be awarded; or date by which orders will be issued for the purchase of component parts to accomplish emission control or process modification;

(3) Date of initiation of on-site construction or installation of emission control equipment or process change;

(4) Date by which on-site construction or installation of emission control equipment or process modification is to be completed; and

(5) Date by which final compliance is to be achieved.

(r) "Transportation control measure" means any measure that is directed toward reducing emissions of air pollutants from transportation sources. Such measures include, but are not limited to, those listed in section 108(f) of the Clean Air Act.

(s)-(w) [Reserved]

(x) "Time period" means any period of time designated by hour, month, season, calendar year, averaging time, or other suitable characteristics, for which ambient air quality is estimated.

(y) "Variance" means the temporary deferral of a final compliance date for an individual source subject to an approved regulation, or a temporary change to an approved regulation as it applies to an individual source.

(z) "Emission limitation" and "emission standard" mean a requirement established by a State, local government, or the Administrator which limits the quantity, rate, or concentration of emissions of air pollutants on a continuous basis, including any requirements which limit the level of opacity, prescribe equipment, set fuel specifications, or prescribe operation or maintenance procedures for a source to assure continuous emission reduction.

(aa) "Capacity factor" means the ratio of the average load on a machine or equipment for the period of time considered to the capacity rating of the machine or equipment.

(bb) "Excess emissions" means emissions of an air pollutant in excess of an emission standard.

(cc) "Nitric acid plant" means any facility producing nitric acid 30 to 70 percent in strength by either the pressure or atmospheric pressure process.

(dd) "Sulfuric acid plant" means any facility producing sulfuric acid by the contact process by burning elemental sulfur, alkylation acid, hydrogen sulfide, or acid sludge, but does not include facilities where conversion to sulfuric acid is utilized primarily as a means of

preventing emissions to the atmosphere of sulfur dioxide or other sulfur compounds.

(ee) "Fossil fuel-fired steam generator" means a furnance or bioler used in the process of burning fossil fuel for the primary purpose of producing steam by heat transfer.

(ff) "Stack" means any point in a source designed to emit solids, liquids, or gases into the air, including a pipe or duct but not including flares.

(gg) "A stack in existence" means that the owner or operator had (1) begun, or caused to begin, a continuous program of physical on-site construction of the stack or (2) entered into binding agreements or contractual obligations, which could not be cancelled or modified without substantial loss to the owner or operator, to undertake a program of construction of the stack to be completed within a reasonable time.

(hh)(1) "Dispersion technique" means any technique which attempts to affect the concentration of a pollutant in the ambient air by:

(i) Using that portion of a stack which exceeds good engineering practice stack height;

(ii) Varying the rate of emission of a pollutant according to atmospheric conditions or ambient concentrations of that pollutant; or

(iii) Increasing final exhaust gas plume rise by manipulating source process parameters, exhaust gas parameters, stack parameters, or combining exhaust gases from several existing stacks into one stack; or other selective handling of exhaust gas streams so as to increase the exhaust gas plume rise.

(2) The preceding sentence does not include:

(i) The reheating of a gas stream, following use of a pollution control system, for the purpose of returning the gas to the temperature at which it was originally discharged from the facility generating the gas stream;

(ii) The merging of exhaust gas streams where:

(A) The source owner or operator demonstrates that the facility was originally designed and constructed with such merged gas streams;

(B) After July 8, 1985 such merging is part of a change in operation at the facility that includes the installation of pollution controls and is accompanied by a net reduction in the allowable emissions of a pollutant. This exclusion from the definition of "dispersion techniques" shall apply only to the emission limitation for the pollutant affected by such change in operation; or

(C) Before July 8, 1985, such merging was part of a change in operation at the facility that included the installation of emissions control equipment or was carried out for sound economic or engineering reasons. Where there was an increase in the emission limitation or, in the event that no emission limitation was in existence prior to the merging, an increase in the quantity of pollutants actually emitted prior to the merging, the reviewing agency shall presume that merging was significantly motivated by an intent to gain emissions credit for greater dispersion. Absent a demonstration by the source owner or operator that merging was not significantly motivated by such intent, the reviewing agency shall deny credit for the effects of such merging in calculating the allowable emissions for the source;

(iii) Smoke management in agricultural or silvicultural prescribed burning programs;

(iv) Episodic restrictions on residential woodburning and open burning; or

(v) Techniques under § 51.100(hh)(1)(iii) which increase final exhaust gas plume rise where the resulting allowable emissions of sulfur dioxide from the facility do not exceed 5,000 tons per year.

(ii) "Good engineering practice" (GEP) stack height means the greater of:

(1) 65 meters, measured from the ground-level elevation at the base of the stack;

(2)(i) For stacks in existence on January 12, 1979, and for which the owner or operator had obtained all applicable permits or approvals required under 40 CFR Parts 51 and 52.

$$H_g = 2.5H,$$

provided the owner or operator produces evidence that this equation was actually relied on in establishing an emission limitation;

(ii) For all other stacks,

$$H_g = H + 1.5L$$

where

H_g = good engineering practice stack height, measured from the ground-level elevation at the base of the stack.

H = height of nearby structure(s) measured from the ground-level elevation at the base of the stack.

L = lesser dimension, height or projected width, of nearby structure(s)

provided that the EPA, State or local control agency may require the use of a field study or fluid model to verify GEP stack height for the source; or

(3) The height demonstrated by a fluid model or a field study approved by the EPA State or local control agency, which ensures that the emissions from a stack do not result in excessive concentrations of any air pollutant as a result of atmospheric downwash, wakes, or eddy effects created by the source itself, nearby structures or nearby terrain features.

(jj) "Nearby" as used in § 51.100(ii) of this part is defined for a specific structure or terrain feature and

(1) for purposes of applying the formulae provided in § 51.100(ii)(2) means that distance up to five times the lesser of the height or the width dimension of a structure, but not greater than 0.8 km (½ mile), and

(2) for conducting demonstrations under § 51.100(ii)(3) means not greater than 0.8 km (½ mile), except that the portion of a terrain feature may be considered to be nearby which falls within a distance of up to 10 times the maximum height (H_t) of the feature, not to exceed 2 miles if such feature achieves a height (H_t) 0.8 km from the stack that is at least 40 percent of the GEP stack height determined by the formulae provided in § 51.100(ii)(2)(ii) of this part or 26 meters, whichever is greater, as measured from the ground-level elevation at the base of the stack. The height of the structure or terrain feature is measured from the ground-level elevation at the base of the stack.

(kk) "Excessive concentration" is defined for the purpose of determining good engineering practice stack height under § 51.100(ii)(3) and means:

(1) for sources seeking credit for stack height exceeding that established under § 51.100(ii)(2) a maximum ground-level concentration due to emissions from a stack due in whole or part to downwash, wakes, and eddy effects produced by nearby structures or nearby terrain features which individually is at least 40 percent in excess of the maximum concentration experienced in the absence of such downwash, wakes, or eddy effects and which contributes to a total concentration due to emissions from all sources that is greater than an ambient air quality standard. For sources subject to the prevention of significant deterioration program (40 CFR 51.166 and 52.21), an excessive concentration alternatively means a maximum ground-level concentration due to emissions from a stack due in whole or part to downwash, wakes, or eddy effects produced by nearby structures or nearby terrain features which individually is at least 40 percent in excess of the maximum concentration experienced in the absence of such downwash, wakes, or eddy effects and greater than a prevention of significant deterioration increment. The allowable emission rate to be used in making demonstrations under this part shall be prescribed by the new source

performance standard that is applicable to the source category unless the owner or operator demonstrates that this emission rate is infeasible. Where such demonstrations are approved by the authority administering the State implementation plan, an alternative emission rate shall be established in consultation with the source owner or operator.

(2) for sources seeking credit after October 11, 1983, for increases in existing stack heights up to the heights established under § 51.100(ii)(2), either (i) a maximum ground-level concentration due in whole or part to downwash, wakes or eddy effects as provided in paragraph (kk)(1) of this section, except that the emission rate specified by any applicable State implementation plan (or, in the absence of such a limit, the actual emission rate) shall be used, or (ii) the actual presence of a local nuisance caused by the existing stack, as determined by the authority administering the State implementation plan; and

(3) for sources seeking credit after January 12, 1979 for a stack height determined under § 51.100(ii)(2) where the authority administering the State implementation plan requires the use of a field study or fluid model to verify GEP stack height, for sources seeking stack height credit after November 9, 1984 based on the aerodynamic influence of cooling towers, and for sources seeking stack height credit after December 31, 1970 based on the aerodynamic influence of structures not adequately represented by the equations in § 51.100(ii)(2), a maximum ground-level concentration due in whole or part to downwash, wakes or eddy effects that is at least 40 percent in excess of the maximum concentration experienced in the absence of such downwash, wakes, or eddy effects.

(ll)–(mm) [Reserved]

(nn) Intermittent control system (ICS) means a dispersion technique which varies the rate at which pollutants are emitted to the atmosphere according to meteorological conditions and/or ambient concentrations of the pollutant, in order to prevent ground-level concentrations in excess of applicable ambient air quality standards. Such a dispersion technique is an ICS whether used alone, used with other dispersion techniques, or used as a supplement to continuous emission controls (i.e., used as a supplemental control system).

§ 51.101 Stipulations.

Nothing in this part will be construed in any manner:

(a) To encourage a State to prepare, adopt, or submit a plan which does not provide for the protection and enhancement of air quality so as to promote the public health and welfare and productive capacity.

(b) To encourage a State to adopt any particular control strategy without taking into consideration the cost-effectiveness of such control strategy in relation to that of alternative control strategies.

(c) To preclude a State from employing techniques other than those specified in this part for purposes of estimating air quality or demonstrating the adequacy of a control strategy, provided that such other techniques are shown to be adequate and appropriate for such purposes.

(d) To encourage a State to prepare, adopt, or submit a plan without taking into consideration the social and economic impact of the control strategy set forth in such plan, including, but not limited to, impact on availability of fuels, energy, transportation, and employment.

(e) To preclude a State from preparing, adopting, or submitting a plan which provides for attainment and maintenance of a national standard through the application of a control strategy not specifically identified or described in this part.

(f) To preclude a State or political subdivision thereof from adopting or enforcing any emission limitations or other measures or combinations thereof to attain and maintain air quality better than that required by a national standard.

(g) To encourage a State to adopt a control strategy uniformly applicable throughout a region unless there is no satisfactory alternative way of providing for attainment and maintenance of a national standard throughout such region.

§ 51.102 Public hearings.

(a) Except as otherwise provided in paragraph (c) of this section, States must conduct one or more public hearings on the following prior to adoption and submission to EPA of:

(1) Any plan or revision of it required by § 51.104(a).

(2) Any individual compliance schedule under (§ 51.260).

(3) Any revision under § 51.104(d).

(b) Separate hearings may be held for plans to implement primary and secondary standards.

(c) No hearing will be required for any change to an increment of progress in an approved individual compliance schedule unless such change is likely to cause the source to be unable to comply with the final compliance date in the schedule. The requirements of §§ 51.104 and 51.105 will be applicable to such schedules, however.

(d) Any hearing required by paragraph (a) of this section will be held only after reasonable notice, which will be considered to include, at least 30 days prior to the date of such hearing(s):

(1) Notice given to the public by prominent advertisement in the area affected announcing the date(s), time(s), and place(s) of such hearing(s);

(2) Availability of each proposed plan or revision for public inspection in at least one location in each region to which it will apply, and the availability of each compliance schedule for public inspection in at least one location in the region in which the affected source is located;

(3) Notification to the Administrator (through the appropriate Regional Office);

(4) Notification to each local air pollution control agency which will be significantly impacted by such plan, schedule or revision;

(5) In the case of an interstate region, notification to any other States included, in whole or in part, in the regions which are significantly impacted by such plan or schedule or revision.

(6) In the case of hearings on AQMA plans:

(i) Notification to the chief executives of affected local governments, planning agencies, transportation agencies, environmental control agencies, economic development agencies, and any other affected States, and

(ii) Public notice of alternative analysis and plan development procedures approved under § 51.63.

(e) The State must prepare and retain, for inspection by the Administrator upon request, a record of each hearing. The record must contain, as a minimum, a list of witnesses together with the text of each presentation.

(f) The State must submit with the plan, revision, or schedule a certification that the hearing required by paragraph (a) of this section was held in accordance with the notice required by paragraph (d) of this section.

(g) Upon written application by a State agency (through the appropriate Regional Office), the Administrator may approve State procedures for public hearings. The following criteria apply:

(1) Procedures approved under this section shall be deemed to satisfy the requirement of this part regarding public hearings.

(2) Procedures different from this part may be approved if they—

(i) Ensure public participation in matters for which hearings are required; and

(ii) Provide adequate public notification of the opportunity to participate.

(3) The Administrator may impose any conditions on approval he or she deems necessary.

§51.103 Submission of plans, preliminary review of plans.

(a) The State makes an official submission to the Administrator when it delivers five copies of the plan to the appropriate Regional Office and a letter to the Administrator giving notice of such action. The State must adopt the plan and the Governor or his designee, must submit it to the Administrator as follows:

(1) For any primary standard, or revision thereof, within 9 months after promulgation of such standard.

(2) For any secondary standard, or revision thereof, within 9 months after promulgation of such secondary standard or by such later date prescribed or by such later date prescribed by the Administrator under Subpart R of this part.

(b) Upon request of a State, the Administrator will provide preliminary review of a plan or portion thereof submitted in advance of the date such plan is due. Such requests must be made in writing to the appropriate Regional Office and must be accompanied by five copies of the materials to be reviewed. Requests for preliminary review do not relieve a State of the responsibility of adopting and submitting plans in accordance with prescribed due dates.

§ 51.104 Revisions.

(a) The plan shall be revised from time to time, as may be necessary, to take account of:

(1) Revisions of national standards,

(2) The availability of improved or more expeditious methods of attaining such standards, such as improved technology or emission charges or taxes, or

(3) A finding by the Administrator that the plan is substantially inadequate to attain or maintain the national standard which it implements, or to otherwise comply with any applicable additional requirements established under the Clean Air Act Amendments of 1977.

(b) The State must revise the plan within 60 days following notification by the Administrator under paragraph (a)(3) of this section, or by such later date prescribed by the Administrator after consultation with the State.

(c) States may revise the plan from time to time consistent with the requirements applicable to implementation plans under this part.

(d) The States must submit any revision of any regulation or any compliance schedule under paragraph (c) of this section to the Administrator no later than 60 days after its adoption.

(e) The State must identify and describe revisions other than those covered by paragraphs (a) and (d) of this section.

(f) EPA will approve revisions only after applicable hearing requirements of § 51.102 have been satisfied.

(g) In order for a variance to be considered for approval as a revision to the State implementation plan, the State must submit it in accordance with the requirements of this section.

§51.105 Approval of plans.

The Administrator will approve any plan, or portion thereof, or any revision of such plan, or portion thereof, if he or she determines that it meets the requirements of the Act. Revisions of a plan, or any portion thereof, will not be considered part of an applicable plan until such revisions have been approved by the Administrator in accordance with this part.

8. a. Subpart G (consisting of §§ 51.110 through 51.119) is added to read as follows:

§ 51.12 [Amended]

b. Paragraphs (e) through (i) of § 51.12 are redesignated as paragraphs (h) through (l) of § 51.110.

Subpart G—Control Strategy

51.110 Attainment and maintenance of national standards.
51.111 Description of control measures.
51.112 Demonstration of adequacy.
51.113 Time period for demonstration of adequacy.
51.114 Emissions data and projections.
51.115 Air quality data and projections.
51.116 Data availability.
51.117 Additional provisions for lead.
51.118 Stack height provisions.
51.119 Intermittent control systems.

Subpart G—Control Strategy

§ 51.110 Attainment and maintenance of national standards.

(a) Each plan must set forth a control strategy that provides the degree of emission reductions necessary for attainment and maintenance of the national air quality standards. The emission reductions must be sufficient to offset any increases in air quality concentrations that are expected to result from emission increases due to projected growth of population, industrial activity, motor vehicle traffic, or other factors.

(b) Each plan providing for the attainment of a primary standard or revision of it must do so as expeditiously as practicable. The attainment period must not be longer than three years after the date of the Administrator's approval of the plan, unless the State obtains an extension under Subpart R of this part. Each plan must also provide for the maintenance of the standard after it has been attained.

(c)(1) Each plan must provide for the attainment of a secondary standard within a reasonable time after the date of the Administrator's approval of the plan, and must provide for the maintenance of the standard after it has been attained.

(2) "Reasonable time" is defined in two ways as follows:

(i) "Reasonable time" for attainment of a secondary standard must not be more than three years from plan submission unless the State shows that good cause exists for postponing application of the control technology. This definition applies only in a region where the degree of emission reduction necessary for attainment of the secondary standard can be achieved through the application of reasonably available control technology.

(ii) "Reasonable time" will depend on the degree of emission reduction needed for attainment of the secondary standard and on the social, economic, and technological problems involved in carrying out a control strategy adequate for attainment of the secondary standard. This definition applies only in a region where application of reasonably available control technology will not be sufficient for attainment of the secondary standard in three years.

(d) Each plan providing for the attainment of a primary or secondary standard must specify the projected attainment date.

(e) The plan for each Region must have adequate provisions to ensure that stationary sources from within that Region will not:

(1) Prevent attainment and maintenance of any national standard in any portion of an interstate Region or any other Region.

(2) Interfere with measures required to be included in the applicable implementation plan for any such Region to prevent significant deterioration of air quality or to protect visibility.

(f) For purposes of developing a control strategy, data derived from measurements of existing ambient levels of a pollutant may be adjusted to reflect the extent to which occasional natural

or accidental phenomena, e.g., dust storms, forest fires, industrial accidents, demonstrably affected such ambient levels during the measurement period.

(g) During developing of the plan, EPA encourages States to identify alternative control strategies, as well as the costs and benefits of each such alternative for attainment or maintenance of the national standard.

* * * * *

§ 51.111 Description of control measures.

Each plan must set forth a control strategy which includes the following:

(a) A description of each control measure that is incorporated into the plan, and a schedule for its implementation.

(b) Copies of the enforceable laws and regulations to implement the measures adopted in the plan.

(c) A description of the administrative procedures to be used in implementing each control measure.

(d) A description of enforcement methods including, but not limited to:

(1) Procedures for monitoring compliance with each of the selected control measures,

(2) Procedures for handling violations, and

(3) A designation of agency responsibility for enforcement of implementation.

§ 51.112 Demonstration of adequacy.

(a) Each plan must demonstrate that the measures, rules, and regulations contained in it are adequate to provide for the timely attainment and maintenance of the national standard that it implements. The adequacy of a control strategy shall be demonstrated by means of a proporational model or dispersion model or other procedure which is shown to be adequate and appropriate for such purposes.

(b) The demonstration must include the following:

(1) A summary of the computations, assumptions, and judgments used to determine the degree of reduction of emissions (or reductions in the growth of emissions) that will result from the implementation of the control strategy.

(2) A presentation of emission levels expected to result from implementation of each measure of the control strategy.

(3) A presentation of the air quality levels expected to result from implementation of the overall control strategy presented either in tabular form or as an isopleth map showing expected maximum pollutant concentrations.

(4) A description of the dispersion models used to project air quality and to evaluate control strategies.

(5) For interstate regions, the analysis from each constituent State must, where practicable, be based upon the same regional emission inventory and air quality baseline.

§ 51.113 Time period for demonstration of adequacy.

(a) The demonstration of the adequacy of the control strategy to attain a primary standard required under § 51.112 must cover the following periods:

(1) At least three years from the date by which the Administator must approve or disapprove the plan, if no extension under Subpart R is granted, or

(2) At least five years from the date by which the Administrator must approve or disapprove the plan. If an extension under Subpart R is granted.

(b) The demonstration of adequacy to attain a secondary standard required under § 51.112 must cover the period of time determined to be reasonable under § 51.110(c) for attainment of such secondary standard.

§ 51.114 Emissions data and projections.

(a) Except for lead, each plan must contain a detailed inventory of emissions from point and area sources. Lead requirements are specified in § 51.117. The inventory must be based upon measured emissions or, where measured emissions are not available, documented emission factors.

(b) Each plan must contain a summary of emission levels projected to result from application of the new control strategy.

(c) Each plan must identify the sources of the data used in the projection of emissions.

§ 51.115 Air quality data and projections.

(a) Each plan must contain a summary of data showing existing air quality.

(b) Each plan must:

(1) Contain a summary of air quality concentrations expected to result from application of the control strategy, and

(2) Identify and describe the dispersion model, other air quality model, or receptor model used.

(c) Actual measurements of air quality must be used where available if made by methods specified in Appendix C to Part 58 of this chapter. Estimated air quality using appropriate modeling techniques may be used to supplement measurements.

(d) For purposes of developing a control strategy, background concentration shall be taken into consideration with respect to particulate matter. As used in this subpart, background concentration is that portion of the measured ambient levels that cannot be reduced by controlling emissions from man-made sources.

(e) In developing an ozone control strategy for a particular area, background ozone concentrations and ozone transported into an area must be considered. States may assume that the ozone standard will be attained in upwind areas.

§ 51.116 Data availability.

(a) The State must retain all detailed data and calculations used in the preparation of each plan or each plan revision, and make them available for public inspection and submit them to the Administrator at his request.

(b) The detailed data and calculations used in the preparation of plan revisions are not considered a part of the plan.

(c) Each plan must provide for public availability of emission data reported by source owners or operators or otherwise obtained by a State or local agency. Such emission data must be correlated with applicable emission limitations or other measures. As used in this paragraph, "correlated" means presented in such a manner as to show the relationship between measured or estimated amounts of emissions and the amounts of such emissions allowable under the applicable emission limitations or other measures.

§ 51.117 Additional provisions for lead.

In addition to other requirements in §§ 51.100 through 51.116 the following requirements apply to lead. To the extent they conflict, there requirements are controlling over those of the proceeding sections.

(a) *Control strategy demonstration.* Each plan must contain a demonstration showing that the plan will attain and maintain the standard in the following areas:

(1) Areas in the vicinity of the following point sources of lead: Primary lead smelters, Secondary lead smelters, Primary copper smelters, Lead gasoline additive plants, Lead-acid storage battery manufacturing plants that produce 2,000 or more batteries per day. Any other stationary source that actually emits 25 or more tons per year of lead or lead compounds measured as elemental lead.

(2) Any other area that has lead air concentrations in excess of the national ambient air quality standard concentration for lead, measured since January 1, 1974.

(b) *Time period for demonstration of adequacy.* The demonstration of adequacy of the control strategy required under § 51.112 may cover a longer period if allowed by the

appropriate EPA Regional Administrator.

(c) *Special modeling provisions.* (1) For urbanized areas with measured lead concentrations in excess of 4.0 $\mu g/m^3$, quarterly mean measured since January 1, 1974, the plan must employ the modified rollback model for the demonstration of attainment as a minimum, but may use an atmospheric dispersion model if desired. If a proportional model is used, the air quality data should be the same year as the emissions inventory required under the paragraph e.

(2) For each point source listed in § 51.117(a), that plan must employ an atmospheric dispersion model for demonstration of attainment.

(3) For each area in the vicinity of an air quality monitor that has recorded lead concentrations in excess of the lead national standard concentration, the plan must employ the modified rollback model as a minimum, but may use an atmospheric dispersion model if desired for the demonstration of attainment.

(d) *Air quality data and projections.*

(1) Each State must submit to the appropriate EPA Regional Office with the plan, but not part of the plan, all lead air quality data measured since January 1, 1974. This requirement does not apply if the data has already been submitted.

(2) The data must be submitted in accordance with the procedures and data forms specified in Chapter 3.4.0 of the "AEROS User's Manual" concerning storage and retrieval of aerometric data (SAROAD) except where the Regional Administrator waives this requirement.

(3) If additional lead air quality data are desired to determine lead air concentrations in areas suspected of exceeding the lead national ambient air quality standard, the plan may include data from any previously collected filters from particulate matter high volume samplers. In determining the lead content of the filters for control strategy demonstration purposes, a State may use, in addition to the reference method, X-ray fluorescence or any other method approved by the Regional Administrator.

(e) *Emissions data.* (1) The point source inventory on which the summary of the baseline lead emissions inventory is based must contain all sources that emit five or more tons of lead per year.

(2) Each State must submit lead emissions data to the appropriate EPA Regional Office with the original plan. The submission must be made with the plan, but not as part of the plan, and must include emissions data and information related to point and area source emissions. The emission data and information should include the information identified in the Hazardous and Trace Emissions System (HATREMS) point source coding forms for all point sources and the area source coding forms for all sources that are not point sources, but need not necessarily be in the format of those forms.

§ 51.118 Stack height provisions.

(a) The plan must provide that the degree of emission limitation required of any source for control of any air pollutant must not be affected by so much of any source's stack height that exceeds good engineering practice or by any other dispersion technique, except as provided in § 51.118(b). The plan must provide that before a State submits to EPA a new or revised emission limitation that is based on a good engineering practice stack height that exceeds the height allowed by § 51.100(ii) (1) or (2), the State must notify the public of the availability of the demonstration study and must provide opportunity for a public hearing on it. This section does not require the plan to restrict, in any manner, the actual stack height of any source.

(b) The provisions of § 51.118(a) shall not apply to (1) stack heights in existence, or dispersion techniques implemented on or before December 31, 1970, except where pollutants are being emitted from such stacks or using such dispersion techniques by sources, as defined in section 111(a)(3) of the Clean Air Act, which were constructed, or reconstructed, or for which major modifications, as defined in §§ 51.165(a)(1)(v)(A), 51.166(b)(2)(i) and 52.21(b)(2)(i), were carried out after December 31, 1970; or (2) coal-fired steam electric generating units subject to the provisions of section 118 of the Clean Air Act, which commenced operation before July 1, 1957, and whose stacks were construced under a construction contract awarded before February 8, 1974.

§ 51.119 Intermittent control systems.

(a) The use of an intermittent control system (ICS) may be taken into account in establishing an emission limitation for a pollutant under a State implementation plan, provided:

(1) The ICS was implemented before December 31, 1970, according to the criteria specified in § 51.119(b).

(2) The extent to which the ICS is taken into account is limited to reflect emission levels and associated ambient pollutant concentrations that would result if the ICS was the same as it was before December 31, 1970, and was operated as specified by the operating system of the ICS before December 31, 1970.

(3) The plan allows the ICS to compensate only for emissions from a source for which the ICS was implemented before December 31, 1970, and, in the event the source has been modified, only to the extent the emissions correspond to the maximum capacity of the source before December 31, 1970. For purposes of this paragraph, a source for which the ICS was implemented is any particular structure or equipment the emissions from which were subject to the ICS operating procedures.

(4) The plan requires the continued operation of any constant pollution control system which was in use before December 31, 1970, or the equivalent of that system.

(5) The plan clearly defines the emission limits affected by the ICS and the manner in which the ICS is taken into account in establishing those limits.

(6) The plan contains requirements for the operation and maintenance of the qualifying ICS which, together with the emission limitations and any other necessary requirements, will assure that the national ambient air quality standards and any applicable prevention of significant deterioration increments will be attained and maintained. These requirements shall include, but not necessarily be limited to, the following:

(i) Requirements that a source owner or operator continuously operate and maintain the components of the ICS specified at § 51.119(b)(3) (ii)–(iv) in a manner which assures that the ICS is at least as effective as it was before December 31, 1970. The air quality monitors and meteorological instrumentation specified at § 51.119(b) may be operated by a local authority or other entity provided the source has ready access to the data from the monitors and instrumentation.

(ii) Requirements which specify the circumstances under which, the extent to which, and the procedures through which, emissions shall be curtailed through the activation of ICS.

(iii) Requirements for recordkeeping which require the owner or operator of the source to keep, for periods of at least 3 years, records of measured ambient air quality data, meteorological information acquired, and production data relating to those processes affected by the ICS.

(iv) Requirements for reporting which require the owner or operator of the source to notify the State and EPA within 30 days of a NAAQS violation pertaining to the pollutant affected by the ICS.

(7) Nothing in this paragraph affects the applicability of any new source review requirements or new source performance standards contained in the Clean Air Act or 40 CFR Subchapter C. Nothing in this paragraph precludes a State from taking an ICS into account in establishing emission limitations to any extent less than permitted by this paragraph.

(b) An intermittent control system (ICS) may be considered implemented for a pollutant before December 31, 1970, if the following criteria are met:

(1) The ICS must have been established and operational with respect to that pollutant prior to December 31, 1970, and reductions in emissions of that pollutant must have occurred when warranted by meteorological and ambient monitoring data.

(2) The ICS must have been designed and operated to meet an air quality objective for that pollutant such as an air quality level or standard.

(3) The ICS must, at a minimum, have included the following components prior to December 31, 1970:

(i) *Air quality monitors.* An array of sampling stations whose location and type were consistent with the air quality objective and operation of the system.

(ii) *Meteorological instrumentation.* A meteorological data acquisition network (may be limited to a single station) which provided meteorological prediction capabilities sufficient to determine the need for, and degree of, emission curtailments necessary to achieve the air quality design objective.

(iii) *Operating system.* A system of established procedures for determining the need for curtailments and for accomplishing such curtailments. Documentation of this system, as required by paragraph (n)(4), may consist of a compendium of memoranda or comparable material which define the criteria and procedures for curtailments and which identify the type and number of personnel authorized to initiate curtailments.

(iv) *Meteorologist.* A person, schooled in meteorology, capable of interpreting data obtained from the meteorological network and qualified to forecast meteorological incidents and their effect on ambient air quality. Sources may have obtained meteorological services through a consultant. Services of such a consultant could include sufficient training of source personnel for certain operational procedures, but not for design, of the ICS.

(4) Documentation sufficient to support the claim that the ICS met the criteria listed in this paragraph must be provided. Such documentation may include affidavits or other documentation.

9. Subpart H (consisting of §§ 51.150 through 51.153) is added to read as follows:

Subpart H—Prevention of Air Pollution Emergency Episodes

51.150 Classification of regions for episode plans.
51.151 Significant harm levels.
51.152 Contingency plans.
51.153 Reevaluation of episode plans.

Subpart H—Prevention of Air Pollution Emergency Episodes

§ 51.150 Classification of regions for episode plans.

(a) This section continues the classification system for episode plans. Each region is classified separately with respect to each of the following pollutants: Sulfur oxides, particulate matter, carbon monoxide, nitrogen dioxide, and ozone.

(b) "Priority I Regions" means any area with greater ambient concentrations than the following:

(1) Sulfur dioxide—100 $\mu g/m^3$ (0.04 ppm) annual arithmetic mean; 455 $\mu g/m^3$ (0.17 ppm) 24-hour maximum.

(2) Particulate matter—95 $\mu g/m^3$ annual geometric mean; 325 $\mu g/m^3$ 24-hour maximum.

(3) Carbon monoxide—55 mg/m^3 (48 ppm) 1-hour maximum; 14 mg/m^3 (12 ppm) 8-hour maximum.

(4) Nitrogen dioxide—100 $\mu g/m^3$ (0.06 ppm) annual arithmetic mean.

(5) Ozone—195 $\mu g/m^3$ (0.10 ppm) 1-hour maximum.

(c) "Priority IA Region" means any area which is Priority I primarily because of emissions from a single point source.

(d) "Priority II Region" means any area which is not a Priority I region and has ambient concentrations between the following:

(1) Sulfur Dioxides—60–100 $\mu g/m^3$ (0.02–0.04 ppm) annual arithmetic mean; 260–445 $\mu g/m^3$ (0.10–0.17 ppm) 24-hour maximum; any concentration above 1,300 $\mu g/m^3$ (0.50 ppm) three-hour average.

(2) Particulate matter—60–95 $\mu g/m^3$ annual geometric mean; 150–325 $\mu g/m^3$ 24-hour maximum.

(e) In the absence of adequate monitoring data, appropriate models must be used to classify an area under paragraph (b) of this section. Information on these models may be found through the "Air Programs Reports and Guidelines Index," EPA-150/2-82-016. With respect to carbon monoxide, ozone, and nitrogen dioxide, any area whose urban population as defined in the most recent U.S. Bureau of the Census, exceeds 200,000 will be classified Priority I.

(f) Areas which do not meet the above criteria are classified Priority III.

§ 51.151 Significant harm levels.

Each plan for a Priority I region must include a contingency plan which must, as a mimimum, provide for taking action necessary to prevent ambient pollutant concentrations at any location in such region from reaching the following levels:

Sulfur dioxide—2,620 $\mu g/m^3$ (1.0 ppm) 24-hour average.

Particulate matter—1,000 $\mu g/m^3$ (24-hour average.

Sulfur dioxide and particulate matter combined—product of sulfur dioxide in ug/m^3 24-hour average, and particulate matter in ug/m^3 24-hour average equal to 490×10^3.

Carbon monoxide—57.5 mg/m^3 (50 ppm) 8-hour average; 86.3 mg/m^3 (75 ppm) 4-hour average; 144 mg/m^3 (125 ppm) 1-hour average.

Ozone—1,200 ug/m^3 (0.6 ppm) 2-hour average.

Nitrogen dioxide—3,750 ug/m^3 (2.0 ppm) 1-hour average; 938 ug/m^3 (0.5 ppm) 24-hour average.

§ 51.152 Contingency plans

(a) Each contingency plan must—

(1) Specify two or more stages of episode criteria such as those set forth in Appendix L to this part, or their equivalent;

(2) Provide for public announcement whenever any episode stage has been determined to exist; and

(3) Specify adequate emission control actions to be taken at each episode stage. (Examples of emission control actions are set forth in Appendix L.)

(b) Each contingency plan for a Priority I region must provide for the following:

(1) Prompt acquisition of forecasts of atmospheric stagnation conditions and of updates of such forecasts as frequently as they are issued by the National Weather Service.

(2) Inspection of sources to ascertain compliance with applicable emission control action requirements.

(3) Communications procedures for transmitting status reports and orders as to emission control actions to be taken during an episode stage, including procedures for contact with public officials, major emission sources, public health, safety, and emergency agencies and news media.

(c) Each plan for a Priority IA and II region must include a contingency plan that meets, as a minimum, the requirements of paragraphs (b)(1) and (b)(2) of this section. Areas classified Priority III do not need to develop episode plans.

(d) Notwithstanding the requirements of paragraphs (b) and (c) of this section,

the Administrator may, at his discretion—

(1) Exempt from the requirements of this section those portions of Priority I, IA, or II regions which have been designated as attainment or unclassifiable for national primary and secondary standards under section 107 of the Act; or

(2) Limit the requirements pertaining to emission control actions in Priority I regions to—

(i) Urbanized areas as identified in the most recent United States Census, and

(ii) Major emitting facilities, as defined by section 169(1) of the Act, outside the urbanized areas.

§ 51.153 Reevaluation of episode plans.

(a) States should periodically reevaluate priority classifications of all Regions or portion of Regions within their borders. The reevaluation must consider the three most recent years of air quality data. If the evaluation indicates a change to a higher priority classification, appropriate changes in the episode plan must be made as expeditiously as practicable.

10. Sections 51.160 through 51.165 are added, and § 51.166 is designated from § 51.24 to comprise Subpart I. The table fo contents for Subpart I and the newly added sections read as follows:

Subpart I—Review of New Sources and Modifications

51.160 Legally enforceable procedures.
51.161 Public availability of information.
51.162 Identification of responsible agency.
51.163 Administration procedures.
51.164 Stack height procedures.
51.165 Permit requirements.
51.166 Prevention of significant deterioration of air quality.

Subpart I—Review of New Sources and Modifications

§ 51.160 Legally enforceable procedures.

(a) Each plan must set forth legally enforceable procedures that enable the State or local agency to determine whether the construction or modification of a facility, building, structure or installation, or combination of these will result in—

(1) A violation of applicable portions of the control strategy; or

(2) Interference with attainment or maintenance of a national standard in the State in which the proposed source (or modification) is located or in a neighboring State.

(b) Such procedures must include means by which the State or local agency responsible for final decisionmaking on an application for approval to construct or modify will prevent such construction or modification if—

(1) It will result in a violation of applicable portions of the control strategy; or

(2) It will interfere with the attainment or maintenance of a national standard.

(c) The procedures must provide for the submission, by the owner or operator of the building, facility, structure, or installation to be constructed or modified, of such information on—

(1) The nature and amounts of emissions to be emitted by it or emitted by associated mobile sources;

(2) The location, design, construction, and operation of such facility, building, structure, or installation as may be necessary to permit the State or local agency to make the determination referred to in paragraph (a) of this section.

(d) The procedures must provide that approval of any construction or modification must not affect the responsibility to the owner or operator to comply with applicable portions of the control strategy.

(e) The procedures must identify types and sizes of facilities, buildings, structures, or installations which will be subject to review under this section. The plan must discuss the basis for determining which facilities will be subject to review.

(f) The procedures must discuss the air quality data and the dispersion or other air quality modeling used to meet the requirements of this subpart.

§ 51.161 Public availability of information.

(a) The legally enforceable procedures in § 51.160 must also require the State or local agency to provide opportunity for public comment on information submitted by owners and operators. The public information must include the agency's analysis of the effect of construction or modification on ambient air quality, including the agency's proposed approval or disapproval.

(b) For purposes of paragraph (a) of this section, opportunity for public comment shall include, as a minimum—

(1) Availability for public inspection in at least one location in the area affected of the information submitted by the owner or operator and of the State or local agency's analysis of the effect on air quality;

(2) A 30-day period for submittal of public comment; and

(3) A notice by prominent advertisement in the area affected of the location of the source information and analysis specified in paragraph (b)(1) of this section.

(c) Where the 30-day comment period required in paragraph (b) of this section would conflict with existing requirements for acting on requests for permission to construct or modify, the State may submit for approval a comment period which is consistent with such existing requirements.

(d) A copy of the notice required by paragraph (b) of this section must also be sent to the Administrator through the appropriate Regional Office, and to all other State and local air pollution control agencies having jurisdiction in the region in which such new or modified installation will be located. The notice also must be sent to any other agency in the region having responsibility for implementing the procedures required under this subpart. For lead, a copy of the notice is required for all point sources. The definition of point for lead is given in § 51.100(k)(2).

§ 51.162 Identification of responsible agency.

Each plan must identify the State or local agency which will be responsible for meeting the requirements of this subpart in each area of the State. Where such responsibility rests with an agency other than an air pollution control agency, such agency will consult with the appropriate State or local air pollution control agency in carrying out the provisions of this subpart.

§ 51.163 Administrative procedures.

The plan must include the administrative procedures, which will be followed in making the determination specified in paragraph (a) of § 51.160.

§ 51.164 Stack height procedures.

Such procedures must provide that the degree of emission limitation required of any source for control of any air pollutant must not be affected by so much of any source's stack height that exceeds good engineering practice or by any other dispersion technique, except as provided in § 51.118(b). Such procedures must provide that before a State issues a permit to a source based on a good engineering practice stack height that exceeds the height allowed by § 51.100(ii) (1) or (2), the State must notify the public of the availability of the demonstration study and must provide opportunity for public hearing on it. This section does not require such procedures to restrict in any manner the actual stack height of any source.

§ 51.165 Permit requirements.

(a) State Implementation Plan provisions satisfying sections 172(b)(6) and 173 of the Act shall meet the following conditions:

(1) All such plans shall use the specific definitions. Deviations from the following wording will be approved only if the state specifically demonstrates that the submitted definition is more stringent, or at least as stringent, in all respects as the corresponding definition below:

(i) "Stationary source" means any building, structure, facility, or installation which emits or may emit any air pollutant subject to regulation under the Act.

(ii) "Building, structure, facility, or installation" means all of the pollutant-emitting activities which belong to the same industrial grouping, are located on one or more contiguous or adjacent properties, and are under the control of the same person (or persons under common control) except the activities of any vessel. Pollutant-emitting activities shall be considered as part of the same industrial grouping if they belong to the same "Major Group" (i.e., which have the same two-digit code) as described in the *Standard Industrial Classification Manual, 1972,* as amended by the 1977 Supplement (U.S. Government Printing Office stock numbers 4101–0065 and 003–005–00176–0, respectively).

(iii) "Potential to emit" means the maximum capacity of a stationary source to emit a pollutant under its physical and operational design. Any physical or operational limitation on the capacity of the source to emit a pollutant, including air pollution control equipment and restrictions on hours of operation or on the type or amount of material combusted, stored, or processed, shall be treated as part of its design only if the limitation or the effect it would have on emissions is federally enforceable. Secondary emissions do not count in determining the potential to emit of a stationary source.

(iv)(A) "Major stationary source" means:

(*1*) Any stationary source of air pollutants which emits, or has the potential to emit 100 tons per year or more of any pollutant subject to regulation under the Act, or

(*2*) Any physical change that would occur at a stationary source not qualifying under paragraph (a)(1)(iv)(A)(*1*) as a major stationary source, if the change would constitute a major stationary source by itself.

(B) A major stationary source that is major for volatile organic compounds shall be considered major for ozone

(C) The fugitive emissions of a stationary source shall not be included in determining for any of the purposes of this paragraph whether it is a major stationary source, unless the source belongs to one of the following categories of stationary sources:

(*1*) Coal cleaning plants (with thermal dryers);

(*2*) Kraft pulp mills;

(*3*) Portland cement plants;

(*4*) Primary zinc smelters;

(*5*) Iron and steel mills;

(*6*) Primary aluminum ore reduction plants;

(*7*) Primary copper smelters;

(*8*) Municipal incinerators capable of charging more than 250 tons of refuse per day;

(*9*) Hydrofluoric, sulfuric, or nitric acid plants;

(*10*) Petroleum refineries;

(*11*) Lime plants;

(*12*) Phosphate rock processing plants;

(*13*) Coke oven batteries;

(*14*) Sulfur recovery plants;

(*15*) Carbon black plants (furnace process);

(*16*) Primary lead smelters;

(*17*) Fuel conversion plants;

(*18*) Sintering plants;

(*19*) Secondary metal production plants;

(*20*) Chemical process plants;

(*21*) Fossil-fuel boilers (or combination thereof) totaling more than 250 million British thermal units per hour heat input;

(*22*) Petroleum storage and transfer units with a total storage capacity exceeding 300,000 barrels;

(*23*) Taconite ore processing plants;

(*24*) Glass fiber processing plants;

(*25*) Charcoal production plants;

(*26*) Fossil fuel-fired steam electric plants of more than 250 million British thermal units per hour heat input; and

(*27*) Any other stationary source category which, as of August 7, 1980, is being regulated under section 111 or 112 of the Act.

(v)(A) "Major modification" means any physical change in or change in the method of operation of a major stationary source that would result in a significant net emissions increase of any pollutant subject to regulation under the Act.

(B) Any net emissions increase that is considered significant for volatile organic compounds shall be considered significant for ozone.

(C) A physical change or change in the method of operation shall not include:

(*1*) Routine maintenance, repair and replacement;

(*2*) Use of an alternative fuel or raw material by reason of an order under sections 2 (a) and (b) of the Energy Supply and Environmental Coordination Act of 1974 (or any superseding legislation) or by reason of a natural gas curtailment plan pursuant to the Federal Power Act;

(*3*) Use of an alternative fuel by reason of an order or rule section 125 of the Act;

(*4*) Use of an alternative fuel at a steam generating unit to the extent that the fuel is generated from municipal solid waste;

(*5*) Use of an alternative fuel or raw material by a stationary source which:

(*i*) The source was capable of accommodating before December 21, 1976, unless such change would be prohibited under any federally enforceable permit condition which was established after December 12, 1976 pursuant to 40 CFR 52.21 or under regulations approved pursuant to 40 CFR Subpart I or § 51.166, or

(*ii*) The source is approved to use under any permit issued under regulations approved pursuant to this section;

(*6*) An increase in the hours of operation or in the production rate, unless such change is prohibited under any federally enforceable permit condition which was established after December 21, 1976 pursuant to 40 CFR 52.21 or regulations approved pursuant to 40 CFR Part 51 Subpart I or 40 CFR 51.166.

(*7*) Any change in owenership at a stationary source.

(vi)(A) "Net emissions increase" means the amount by which the sum of the following exceeds zero:

(*1*) Any increase in actual emissions from a particular physical change or change in the method of operation at a stationary source; and

(2) Any other increases and decreases in actual emissions at the source that are contemporaneous with the particular change and are otherwise creditable.

(B) An increase or decrease in actual emissions is contemporaneous with the increase from the particular change only if it occurs before the date that the increase from the particular change occurs;

(C) An increase or decrease in actual emissions is creditable only if:

(*1*) It occurs within a reasonable period to be specified by the reviewing authority; and

(*2*) The reviewing authority has not relied on it in issuing a permit for the source under regulations approved pursuant to this section which permit is in effect when the increase in actual emissions from the particular change occurs;

(D) An increase in actual emissions is creditable only to the extent that the new level of actual emissions exceeds the old level.

(E) A decrease in actual emissions is creditable only to the extent that:

(1) The old level of actual emission or the old level of allowable emissions whichever is lower, exceeds the new level of actual emissions;

(2) It is federally enforceable at and after the time that actual construction on the particular change begins; and

(3) The reviewing authority has not relied on it in issuing any permit under regulations approved pursuant to 40 CFR Part 51 Subpart I or the state has not relied on it in demonstrating attainment or reasonable further progress;

(4) It has approximately the same qualitative significance for public health and welfare as that attributed to the increase from the particular change.

(F) An increase that results from a physical change at a source occurs when the emissions unit on which construction occurred becomes operational and begins to emit a particular pollutant. Any replacement unit that requires shakedown becomes operational only after a reasonable shakedown period, not to exceed 180 days.

(vii) "Emissions unit" means any part of a stationary source which emits or would have the potential to emit any pollutant subject to regulation under the the Act.

(viii) "Secondary emissons" means emissions which would occur as a result of the construction or operation of a major stationary source or major modification, but do not come from the major stationary source or major modification itself. For the purpose of this section, secondary emissions must be specific, well defined, quantifiable, and impact the same general area as the stationary source or modification which causes the secondary emissions. Secondary emissions include emissions from any offsite support facility which would not be constructed or increase its emissions except as a result of the construction of operation of the major stationary source of major modification. Secondary emissions do not include any emissions which come directly from a mobile source such as emissions from the tailpipe of a motor vehicle, from a train, or from a vessel.

(ix) "Fugitive emissions" means those emissions which could not reasonably pass through a stack, chimney, vent or other functionally equivalent opening.

(x) "Significant" means, in reference to a net emissions increase or the potential of a source to emit any of the following pollutions, a rate of emissions that would equal or exceed any of the following rates:

Pollutant Emissions Rate

Carbon monoxide: 100 tons per year (tpy)
Nitrogen oxides: 40 tpy
Sulfur dioxide: 40 tpy
Particulate matter: 25 tpy
Ozone: 40 tpy of volatile organic compounds
Lead: 0.6 tpy

(xi) "Allowable emissions" means the emissions rate of a stationary source calculated using the maximum rated capacity of the source (unless the source is subject to federally enforceable limits which restrict the operating rate, or hours of operation, or both) and the most stringent of the following:

(A) The applicable standards set forth in 40 CFR Part 60 or 61;

(B) Any applicable State Implementation Plan emissions limitation including those with a future compliance date; or

(C) The emissions rate specified as a federally enforceable permit condition, including those with a future compliance date.

(xii)(A) "Actual emissions" means the actual rate of emissions of a pollutant from an emissions unit as determined in accordance with paragraphs (a)(1)(xii)(B) through (D) of this section.

(B) In general, actual emissions as of a particular date shall equal the average rate, in tons per year, at which the unit actually emitted the pollutant during a two-year period which precedes the particular date and which is representative of normal source operation. The reviewing authority shall allow the use of a different time period upon a determination that it is more representative of normal source operation. Actual emissions shall be calculated using the unit's actual operating hours, production rates, and types of materials processed, stored, or combusted during the selected time period.

(C) The reviewing authority may presume that the source-specific allowable emissions for the unit are equivalent to the actual emissions of the unit.

(D) For any emissions unit which has not begun normal operations on the particular date, actual emissions shall equal the potential to emit of the unit on that date.

(xiii) "Lowest achievable emission rate" means, for any source, the more stringent rate of emissions based on the following:

(A) The most stringent emissions limitation which is contained in the implementation plan of any State for such class or category of stationary source, unless the owner or operator of the proposed stationary source demonstrates that such limitations are not achievable; or

(B) The most stringent emissions limitation which is achieved in practice by such class or category of stationary sources. This limitation, when applied to a modification, means the lowest achievable emissions rate for the new or modified emissions units within or stationary source. In no event shall the application of the term permit a proposed new or modified stationary source to emit any pollutant in excess of the amount allowable under an applicable new source standard of performance.

(xiv) "Federally enforceable" means all limitations and conditions which are enforceable by the Administrator, including those requirements developed pursuant to 40 CFR Parts 60 and 61, requirements within any applicable State Implementation Plan, and any permit requirements established pursuant to 40 CFR 52.21 or under regulations approved pursuant to this section, 40 CFR Part 51 Subpart I, or § 51.166.

(xv) "Begin actual construction" means in general, initiation of physical on-site construction activities on an emissions unit which are of a permanent nature. Such activities include, but are not limited to, installation of building supports and foundations, laying of underground pipework, and construction of permanent storage structures. With respect to a change in method of operating this term refers to those on-site activities other than preparatory activities which mark the initiation of the change.

(xvi) "Commence" as applied to construction of a major stationary source or major modification means that the owner or operator has all necessary preconstruction approvals or permits and either has:

(A) Begun, or caused to begin, a continuous program of actual on-site construction of the source, to be completed within a reasonable time; or

(B) Entered into binding agreements or contractual obligations, which cannot be canceled or modified without substantial loss to the owner or operator, to undertake a program of actual construction of the source to be completed within a reasonable time.

(xvii) "Necessary preconstruction approvals or permits" means those Federal air quality control laws and regulations and those air quality control laws and regulations which are part of the applicable State Implementation Plan.

(xviii) "Construction" means any physical change or change in the method of operation (including fabrication, erection, installation, demolition, or modification of an emissions unit) which would result in a change in actual emissions.

(2) Each plan shall adopt a preconstruction review program to satisfy the requirements of sections 172(b)(6) and 173 of the Act for any area designated nonattainment for any national ambient air quality standard under 40 CFR 81.300 *et seq.* Such a program shall apply to any new major stationary source or major modification that is major for the pollutant for which the area is designated nonattainment, if the stationary source or modification would locate anywhere in the designated nonattainment area.

(3)(i) Each plan shall provide that for sources and modifications subject to any preconstruction review program adopted pursuant to this subsection the baseline for determining credit for emissions reductions is the emissions limit under the applicable State Implementation Plan in effect at the time the application to construct is filed, except that the offset baseline shall be the actual emissions of the source from which offset credit is obtained where:

(A) The demonstration of reasonable further progress and attainment of ambient air quality standards is based upon the actual emissions of sources located within a designated nonattainment area for which the preconstruction review program was adopted; or

(B) The applicable State Implementation Plan does not contain an emissions limitation for that source or source category.

(ii) The plan shall further proivide that:

(A) Where the emissions limit under the applicable State Implementation Plan allows greater emissions than the potential to emit of the source, emissions offset credit will be allowed only for control below this potential;

(B) For an existing fuel combustion source, credit shall be based on the allowable emissions under the applicable State Implementation Plan for the type of fuel being burned at the time the application to construct is filed. If the existing source commits to switch to a cleaner fuel at some future date, emissions offset credit based on the allowable (or actual) emissions for the fuels involved is not acceptable, unless the permit is conditioned to require the use of a specified alternative control measure which would achieve the same degree of emissions reduction should the source switch back to a dirtier fuel at some later date. The reviewing authority should ensure that adequate long-term supplies of the new fuel are available before granting emissions offset credit for fuel switches.

(C) Emissions reductions achieved by shutting down an existing source or permanently curtailing production or operating hours below baseline levels may be credited, provided that the work force to be affected has been notified of the proposed shutdown or curtailment. Source shutdowns and curtailments in production or operating hours occurring prior to the date the new source application is filed generally may not be used for emissions offset credit. However, where an applicant can establish that it shut down or curtailed production after August 7, 1977, or less than one year prior to the date of permit application whichever is earlier, and the proposed new source is a replacement for the shutdown or curtailment credit for such shutdown or curtailment may be applied to offset emissions from the new source.

(D) No emissions credit may be allowed for replacing one hydrocarbon compound with another of lesser reactivity, except for those compounds listed in Table 1 of EPA's "Recommended Policy on Control of Volatile Organic Compounds" (42 FR 35314, July 8, 1977; (This document is also available from Mr. Ted Creekmore, Office of Air Quality Planning and Standards, (MD–15) Research Triangle Park, NC 27711.))

(E) All emission reductions claimed as offset credit shall be federally enforceable;

(F) Procedures relating to the permissible location of offsetting emissions shall be followed which are at least as stringent as those set out in 40 CFR Part 51 Appendix S section IV.D.

(G) Credit for an emissions reduction can be claimed to the extent that the reviewing authority has not relied on it in issuing any permit under regulations approved pursuant to 40 CFR Part 51 Subpart I or the State has not relied on it in demonstration attainment or reasonable further progress.

(4) Each plan may provide that the provisions of this paragraph do not apply to a source or modification that would be a major stationary source or major modification only if fugitive emission to the extent quantifiable are considered in calculating the potential to emit of the stationary source or modification and the source does not belong to any of the following categories:

(i) Coal cleaning plants (with thermal dryers);

(ii) Kraft pulp mills;

(iii) Portland cement plants;

(iv) Primary zinc smelters;

(v) Iron and steel mills;

(vi) Primary aluminum ore reduction plants;

(vii) Primary copper smelters;

(viii) Municipal incinerators capable of charging more than 250 tons of refuse per day;

(ix) Hydrofluoric, sulfuric, or citric acid plants;

(x) Petroleum refineries;

(xi) Lime plants;

(xii) Phosphate rock processing plants;

(xiii) Coke oven batteries;

(xiv) Sulfur recovery plants;

(xv) Carbon black plants (furnace process);

(xvi) Primary lead smelters;

(xvii) Fuel conversion plants;

(xviii) Sintering plants;

(xix) Secondary metal production plants;

(xx) Chemical process plants;

(xxi) Fossil-fuel boilers (or combination thereof) totaling more than 250 million British thermal units per hour heat input;

(xxii) Petroleum storage and transfer units with a total storage capacity exceeding 300,000 barrels;

(xxiii) Taconite ore processing plants;

(xxiv) Glass fiber processing plants;

(xxv) Charcoal production plants;

(xxvi) Fossil fuel-fired steam electric plants of more than 250 million British thermal units per hour heat input;

(xxvii) Any other stationary source category which, as of August 7, 1980, is being regulated under section 111 or 112 of the Act.

(5) Each plan shall include enforceable procedures to provide that:

(i) Approval to construct shall not relieve any owner or operator of the responsibility to comply fully with applicable provision of the plan and any other requirements under local, State or Federal law.

(ii) At such time that a particular source or modification becomes a major stationary source or major modification solely by virtue of a relaxation in any enforcement limitation which was established after August 7, 1980, on the capacity of the source or modification otherwise to emit a pollutant, such as a restriction on hours of operation, then the requirements of regulations approved pursuant to this section shall apply to the source or modification as though construction had not yet commenced on the source or modification.

(b) Each plan shall adopt a preconstruction review permit program or its equivalent to satisfy the requirements of section 110(a)(2)(D)(i) of the Act for any area designated as attainment or unclassifiable for any national ambient air quality standard under 40 CFR 81.300 *et seq.* Such a program or its equivalent shall apply to any new major stationary source or

major modification that would locate in a designated attainment or the unclassifiable area and would exceed the significant increments specified in section III.A. of the Emission Offset Interpretive Ruling Appendix S to this part.

§ 51.166 Prevention of significant deterioration of air quality.

* * * * *

11. Subpart K (consisting of §§ 51.210 through 51.214), Subpart L (consisting of §§ 51.230 through 51.232), and subpart N (consisting of §§ 51.260 through 51.262) are added to read as follows:

Subpart K—Source Surveillance

Sec.

51.210 General.
51.211 Emission reports and recordkeeping.
51.212 Testing, inspection, enforcement, and complaints.
51.213 Transportation control measures.
51.214 Continuous emission monitoring.

Subpart L—Legal Authority

51.230 Requirements for all plans.
51.231 Identification of legal authority.
51.232 Assignment of legal authority to local agencies.

* * * * *

Subpart N—Compliance Schedules

51.260 Legally enforceable compliance schedules.
51.261 Final compliance schedules.
51.262 Extension beyond one year.

Subpart K—Source Surveillance

§ 51.210 General.

Each plan must provide for monitoring the status of compliance with any rules and regulations that set forth any portion of the control strategy. Specifically, the plan must meet the requirements of this subpart.

§ 51.211 Emission reports and recordkeeping.

The plan must provide for legally enforceable procedures for requiring owners or operators of stationary sources to maintain records of and periodically report to the State—

(a) Information on the nature and amount of emissions from the stationary sources; and

(b) Other information as may be necessary to enable the State to determine whether the sources are in compliance with applicable portions of the control strategy.

§ 51.212 Testing, inspection, enforcement, and complaints.

The plan must provide for—

(a) Periodic testing and inspection of stationary sources; and

(b) Establishment of a system for detecting violations of any rules and regulations through the enforcement of appropriate visible emission limitations and for investigating complaints.

§ 51.213 Transportation control measures.

(a) The plan must contain procedures for obtaining and maintaining data on actual emissions reductions acheived as a result of implementing transportation control measures.

(b) In the case of measures involving inspection, maintenance, or retrofit, these data must include the results of an emission surveillance program designed to determine actual average per vehicle emissions reductions attributable to inspection, maintenance, and/or retrofit.

(c) In the case of measures based on traffic flow changes or reductions in vehicle use, the data must include observed changes in vehicle miles traveled and average speeds.

(d) The data must be maintained in such a way as to facilitate comparison of the planned and actual efficacy of the transportation control measures.

§ 51.214 Continuous emission monitoring.

(a) The plan must contain legally enforceable procedures to—

(1) Require stationary sources subject to emission standards as part of an applicable plan to install, calibrate, maintain, and operate equipment for continuously monitoring and recording emissions; and

(2) Provide other information as specified in Appendix P of this part.

(b) The procedures must—

(1) Identify the types of sources, by source category and capacity, that must install the equipment; and

(2) Identify for each source category the pollutants which must be monitored.

(c) The procedures must, as a minimum, require the types of sources set forth in Appendix P of this part to meet the applicable requirements set forth therein.

(d)(1) The procedures must contain provisions that require the owner or operator of each source subject to continuous emission monitoring and recording requirements to maintain a file of all pertinent information for at least two years following the date of collection of that information.

(2) The information must include emission measurements, continuous monitoring system performance testing measurements, performance evaluations, calibration checks, and adjustments and maintenance performed on such monitoring systems and other reports and records required by Appendix P of this part.

(e) The procedures must require the source owner or operator to submit information relating to emissions and operation of the emission monitors to the State to the extent described in Appendix P at least as frequently as described therein.

(f) (1) The procedures must provide that sources subject to the requirements of paragraph (c) of this section must have installed all necessary equipment and shall have begun monitoring and recording within 18 months after either—

(i) The approval of a State plan requiring monitoring for that source; or

(ii) Promulgation by the Agency of monitoring requirements for that source.

(2) The State may grant reasonable extensions of this period to sources that—

(i) Have made good faith efforts to purchases, install, and begin the monitoring and recording of emission data; and

(ii) Have been unable to complete the installation within the period.

Subpart L—Legal Authority

§ 51.230 Requirements for all plans.

Each plan must show that the State has legal authority to carry out the plan, including authority to:

(a) Adopt emission standards and limitations and any other measures necessary for attainment and maintenance of national standards.

(b) Enforce applicable laws, regulations, and standards, and seek injunctive relief.

(c) Abate pollutant emissions on an emergency basis to prevent substantial endangerment to the health of persons, i.e., authority comparable to that available to the Administrator under section 305 of the Act.

(d) Prevent construction, modification, or operation of a facility, building, structure, or installation, or combination thereof, which directly or indirectly results or may result in emissions of any air pollutant at any location which will prevent the attainment or maintenance of a national standard.

(e) Obtain information necessary to determine whether air pollution sources are in compliance with applicable laws, regulations, and standards, including authority to require recordkeeping and to make inspections and conduct tests of air pollution sources.

(f) Require owners or operators of stationary sources to install, maintain, and use emission monitoring devices and to make periodic reports to the State on the nature and amounts of emissions from such stationary sources; also authority for the State to make such data available to the public as reported

and as correlated with any applicable emission standards or limitations.

§ 51.231 Identification of legal authority.

(a) The provisions of law or regulation which the State determines provide the authorities required under this section must be specifically identified, and copies of such laws or regulations be submitted with the plan.

(b) The plan must show that the legal authorities specified in this subpart are available to the State at the time of submission of the plan.

(c) Legal authority adequate to fulfill the requirements of § 51.230 (e) and (f) of this subpart may be delegated to the State under section 114 of the Act.

§ 51.232 Assignment of legal authority to local agencies.

(a) A State government agency other than the State air pollution control agency may be assigned responsibility for carrying out a portion of a plan if the plan demonstrates to the Administrator's satisfaction that the State governmental agency has the legal authority necessary to carry out the portion of plan.

(b) The State may authorize a local agency to carry out a plan, or portion thereof, within such local agency's jurisdiction if—

(1) The plan demonstrates to the Administrator's satisfaction that the local agency has the legal authority necessary to implement the plan or portion of it; and

(2) This authorization does not relieve the State of responsibility under the Act for carrying out such plan, or portion thereof.

Subpart N—Compliance Schedules

§ 51.260 Legally enforceable compliance schedules.

(a) Each plan shall contain legally enforceable compliance schedules setting forth the dates by which all stationary and mobile sources or categories of such sources must be in compliance with any applicable requirement of the plan.

(b) The compliance schedules must contain increments of progress required by § 51.262 of this subpart.

§ 51.261 Final compliance schedules.

(a) Unless EPA grants an extension under Subpart R, compliance schedules designed to provide for attainment of a primary standard must—

(1) Provide for compliance with the applicable plan requirements as soon as practicable; or

(2) Provide for compliance no later than the date specified for attainment of the primary standard under:

(b) Unless EPA grants an extension under Subpart R, compliance schedules designed to provide for attainment of a secondary standard must—

(1) Provide for compliance with the applicable plan requirements in a reasonable time; or

(2) Provide for compliance no later than the date specified for the attainment of the secondary standard under § 51.110(c).

§ 51.262 Extension beyond one-year.

(a) Any compliance schedule or revision of it extending over a period of more than one year from the date of its adoption by the State agency must provide for legally enforceable increments of progress toward compliance by each affected source or category of sources. The increments of progress must include—

(1) Each increment of progress specified in § 51.100(q); and

(2) Additional increments of progress as may be necessary to permit close and effective supervision of progress toward timely compliance.

(b) [Reserved]

Subpart O—Miscellaneous Plan Content Requirements [Amended]

12. Sections 51.280 and 51.281 are added to Subpart O to read as follows:

§ 51.280 Resources.

Each plan must include a description of the resources available to the State and local agencies at the date of submission of the plan and of any additional resources needed to carry out the plan during the 5-year period following its submission. The description must include projections of the extent to which resources will be acquired at 1-, 3-, and 5-year intervals.

§ 51.281 Copies of rules and regulations.

Emission limitations and other measures necessry for attainment and maintenance of any national standard, including any measures necessary to implement the requirements of Subpart L must be adopted as rules and regulations enforceable by the State agency. Copies of all such rules and regulations must be submitted with the plan. Submittal of a plan setting forth proposed rules and regulations will not satisfy the requirements of this section nor will it be considered a timely submittal.

13. Subpart R consisting of §§ 51.340 and 51.341 is added as follows:

Subpart R—Extensions

Sec.

51.340 Request for 2-year extension.

51.341 Request for 18-month extension.

§ 51.340 Request for 2-year extension.

(a) The Governor of a State may, at the time of submission of a plan to implement a primary standard, request the Administrator to extend, for a period not exceeding 2 years, the 3-year period prescribed by the Act for attainment of the primary standard in such region.

(b) Any such request regarding an interstate region must be submitted jointly with the requests of Governors of all States in the region, or shall show that the Governor of each State in the region has been notified of such a request.

(c) Any such request regarding attainment of a primary standard must be submitted together with a plan which shall:

(1) Set forth a control strategy adequate for attainment of such primary standard.

(2) Show that the necessary techology or alternatives will not be available soon enough to permit full implementation of such control strategy within such 3-year period, i.e., one or more emission sources or classes of sources will be unable to comply with applicable portions of the control strategy.

(3) Provide for attainment of such primary standard as expeditiously as practicable, but in no case later than 5 years after the date of the Administrator's approval of such plan.

(d) Any showing pursuant to paragraph (c) of this section must include the following:

(1) A clear identification of stationary emission sources or classes of moving sources which will be unable to comply with the applicable portions of such control strategy within a 3-year period because the necessary technology or alternatives will not be available soon enough to permit such compliance.

(2) A clear identification and justification of any assumptions made with the respect to the time at which the necessary technology or alternatives will be available.

(3) A clear identification of any alternative means of attainment of such primary standard which were considered and rejected.

(4) A showing that stationary emission sources or classes of moving sources other than those identified pursuant to paragraph (d)(1) of this section will be required to comply, within such 3-year period, with any applicable portions of such control strategy.

(5) A showing that reasonable interim control measures are provided for in

such plan with respect to emissions from the source(s) identified pursuant to paragraph (d)(1) of this section.

§ 51.341 Request for 18-month extension.

(a) Upon request of the State made in accordance with this section, the Administrator may, whenever he determines necessary, extend, for a period not to exceed 18 months, the deadline for submitting that portion of a plan that implements a secondary standard.

(b) Any such request must show that attainment of the secondary standards will require emission reductions exceeding those which can be achieved through the application of reasonably available control technology.

(c) Any such request for extension of the deadline with respect to any State's portion of an interstate region must be submitted jointly with requests for such extensions from all other States within the region or must show that all such States have been notified of such request.

(d) Any such request must be submitted sufficiently early to permit development of a plan prior to the deadline in the event that such request is denied.

§ 51.327 [Amended]

14. Section 51.327 is amended by changing the term "§ 51.6" to "§ 51.104."

§ 51.328 [Removed and reserved]

15. Section 51.328 is removed and reserved.

Appendices A through H, K, M O, and R [Removed and Reserved]

16. Appendices A through H, K, M, O, and R are removed and reserved.

Appendix L [Amended]

17. The first paragraph of Appendix L is revised to read as follows:

Appendix L—Example Regulations for Prevention of Air Pollution Emergency Episodes

The example regulations presented herein reflect generally recognized ways of preventing air pollution from reaching levels that would cause imminent and substantial endangerment to the health of persons. States are required under Subpart H to have emergency episodes plans but they are not required to adopt the regulations presented herein.

* * * * *

18. In Appendix L, section 1.1(b) is amended by changing the term "Ozone (O_3) = 200 ug/m³ (0.1ppm) 1-hour average" to "Ozone (O_3) = 400 ug/m³ (0.2 ppm)-hour average."

19. In Appendix L, section 1.1 (b), (c), and (d) the paragraphs for NO_2 are revised and a paragraph is added to read as follows:

* * * * *

(b) * * *

NO_2—1130 μg/m³ (0.6ppm) 1-hour average, 282 μg/m³ (0.15 ppm) 24-hour average.

In addition to the levels listed for the above pollutants, meterological conditions are such that pollutant concentrations can be expected to remain at the above levels for twelve (12) or more hours or increase, or in the case of ozone, the situation is likely to reoccur within the next 24-hours unless control actions are taken.

(c) * * *

NO_2—2260 μg/m³ (1.2 ppm), 1-hour average; 565 μg/m³ (0.3 ppm), 24-hour average.

In addition to the levels listed for the above pollutants, meterological conditions are such that pollutant concentrations can be expected to remain at the above levels for twelve (12) or more hours or increase, or in the case of ozone, the situation is likely to reoccur within the next 24-hours unless control actions are taken.

(d) * * *

NO_2—3,000 μg/m³ (1.6 ppm), 1-hour average; 750 μg/m³ (0.4 ppm), 24-hour average.

In addition to the levels listed for the above pollutants, meterological conditions are such that pollutant concentrations can be expected to remain at the above levels for twelve (12) or more hours or increase, or in the case of ozone, the situation is likely to reoccur within the next 24-hours unless control actions are taken.

§§ 51.61 and 51.166 [Amended]

20. The following sections are amended by removing the reference to "§ 51.4" and replacing it with "§ 51.102": § 51.61(e), § 51.166(a)(5), (g)(2)(i).

§§ 51.40 and 51.41 [Amended]

21. The following sections are amended by removing the reference to "§ 51.12(f)" and replacing it with "§ 51.110(i)": § 51.40(a), (b), § 51.41.

22. The following sections are amended by removing the reference to "§ 51.12(i)" and replacing it with "§ 51.110(l)": § 51.40(a), (b), § 51.41.

§§ 51.54 and 51.166 [Amended]

23. The following sections are amended by removing the reference to "§ 51.18" and replacing it with "Subpart I": § 51.54(e)(b)(17), § 51.166(b)(2)(iii)(*e*)(*1*), (b)(2)(iii)(*f*).

§51.166 [Amended]

24. The following paragraphs are amended by removing the reference to "§ 51.24" and replacing it with "§51.166": § 51.166(b)(2)(iii)(e)(*1*), (b)(2)(iii)(*e*)(*2*), (b)(2)(iii)(*f*), (b)(14)(i)(*b*), (b)(14)(ii)(*a*), (b)(15)(ii)(*b*), (b)(17), (f)(3), (i)(9).

Appendix P—[Amended]

25. In Appendix P, section 1.0 is amended by removing the reference to "§ 51.19(e)" and replacing it with "§ 51.165(b)":

26. In Appendix P, section 4.0 is amended by removing the reference to "§ 51.19(e)(3) and (4)" and replacing it with "§ 51.214(d) and (e)":

Appendix S—[Amended]

27. In Appendix S, the following sections are amended by removing the reference to "§ 51.18" and replacing it with "Subpart I": I, II. (A)(5)(iii)(*f*), II. (A)(5)(iii)(*e*)(*1*), II. (A)(12.

28. In Appendix S, section III.A is amended by removing the reference to "§ 51.18(k)" and replacing it with "§ 51.165(b)":

29. In Appendix S, the following sections are amended by removing the reference to "§ 51.24" and replacing it with "§ 51.166": II. (A)(5)(iii)(*e*)(*1*), II. (A)(12), II. (A)(5)(iii)(*f*).

PART 52—APPROVAL AND PROMULGATION OF IMPLEMENTATION PLANS

Part 52 of Title 40, Code of Federal Regulations is amended as follows:

1. The authority citation for Part 52 continues to read as follows:

Authority: 42 U.S.C. 7401–7642.

§ 52.771 [Amended]

1A. The following paragraphs are amended by removing the references to "§ 51.3(a)," and § 51.3(b)" and replacing them with "§ 51.150": § 52.771(b), (c), (d).

PART 52—[AMENDED]

2. The following sections are amended by removing the reference to "§ 51.4" and replacing it with "§ 51.102": § 52.21(f)(1), (g)(2)(i), § 52.876(c)(2), § 52.1602(a), § 52.2056(a), § 52.2080(b)(3), § 52.2232(d), § 52.2345(a), § 52.2282(a).

§ 52.1487 [Amended]

3. The following section is amended by removing the reference to "§ 51.4 (a)(2)" and replacing it with "§ 51.102 (a) and (e)": § 52.1487(a).

§ 52.497 and 52.2056 [Amended]

4. The following sections are amended by removing the reference to "§ 51.5" and replacing it with "§ 51.103:" § 52.497(a), § 52.2056(a).

5. The following sections are amended by removing the reference to "§ 51.6" and replacing it with "§ 51.104": § 52.55(a), § 52.240(f)(1), § 52.576(a), § 52.677(b), § 52.730(c), § 52.778(c), § 52.825(c), § 52.828(b)(1)(iii), § 52.876(c), § 52.927(c), § 52.980(a), § 52.980(b), (c), § 52.980(d), § 52.1175(e), § 52.1274(e), § 52.1335(a), § 52.1425(a), § 52.1826(b), § 52.1774(a), § 52.1830(a).

§ 52.2078(b)(iii), § 52.2080(a), (b)(1)(iii), § 52.2123(b), § 52.2435(a), § 52.2578(d).

§§ 52.828 and 52.2078 [Amended]

6. The following sections are amended by removing the reference to "§ 51.8" and replacing it with "§ 51.105": § 52.828(b)(1)(iii), § 52.2078(b)(1)(iii).

§ 52.2424 [Amended]

7. The following section is amended by removing the reference to "§ 51.10(b)" and replacing it with "§ 51.110(b)(d)": § 52.2424(a).

§ 52.795 [Amended]

8. The following section is amended by removing the reference to "§ 51.10(d)" and replacing it with "§ 51.110(e)": § 52.795(c).

9. The following sections are amended by removing the reference to "§ 51.10(e)" and replacing it with "§ 51.116(c)": § 52.73(a), § 52.178(a), § 52.224(a), (c), § 52.525(a), § 52.624(a), § 52.925(a), § 52.1113(a), § 52.1224(a), § 52.1277(a), § 52.1324(a), § 52.1378(a), § 52.1473(a), § 52.1526(a), § 52.1574(a), § 52.1623(a), § 52.2024(a), § 52.2073(a), § 52.2274(a), § 52.2374(a), § 52.2573(a), § 52.2725(a).

§ 52.74 [Amended]

10. The following section is amended by removing the reference to "§ 51.11" and replacing it with "§ 51.230": § 52.74(a).

§ 52.74 and 52.2224 [Amended]

11. The following sections are amended by removing the reference to "§ 51.11(a)(2)" and replacing it with "§ 51.230(b)": § 52.74(a)(1)(iv), (a)(2)(i), § 52.2224(c), (d), (e).

12. The following sections are amended by removing the reference to "§ 51.11(a)(3)" and replacing it with "§ 51.230(c)": § 52.74(a)(2)(v), § 52.225(a), § 52.1325(b)(5)(i), § 52.2224(a).

13. The following sections are amended by removing the reference to "§ 51.11(a)(4)" and replacing it with "§ 51.230(d)": § 52.74(b), § 52.324(c), § 52.775(2)(i), (a)(7)(iii), (a)(8)(ii), (a)(9)(i), (a)(10)(iii), § 52.874(c), § 52.1275(a), § 52.1325(c), § 52.2124(d), § 52.2224(b).

14. The following sections are amended by removing the reference to "§ 51.11(a)(5)" and replacing it with "§ 51.230(e)": § 52.74(a)(1)(i), (a)(2)(ii), § 52.775(a)(1)(i), (a)(2)(ii), (a)(3)(i), (a)(4)(i), (a)(5)(i), (a)(6)(i), (a)(7)(i), (a)(9)(ii), (a)(10)(i), § 52.1325(b)(1)(i), (b)(2)(i), (b)(2)(ii), (b)(3)(i), (b)(4)(i), (b)(5)(ii), § 52.2074(a).

15. The following sections are amended by removing the reference to "§ 51.11(a)(6)" and replacing it with "§ 51.230(f)": § 52.74(a)(1)(ii), (a)(1)(iii), (a)(2)(iii), (a)(2)(iv), (c), § 52.775(a)(5)(ii), § 52.179(a), § 52.225(b), § 52.324(a), § 52.526(a), § 52.625(a), § 52.674(a), § 52.775(a)(1)(ii), (a)(2)(iii), (a)(3)(ii), (a)(4)(ii), (a)(6)(ii), (a)(7)(ii), (a)(8)(i), (a)(9)(iii), (a)(10)(ii), § 52.1325(b)(4)(ii), (b)(5)(iii), (a)(11)(i), § 52.874(a), (b)(1)(i), (b)(2)(i), (b)(3)(i), § 52.924(a), § 52.1074(a), § 52.1275(b), (b)(1)(ii), (b)(2)(iii), § 52.1379(a), § 52.1575(a), § 52.2025(a), § 52.2074(b), § 52.2173(a), § 52.2333(a), § 52.2373(a), § 52.2574(a), § 52.2726(a).

16. The following sections are amended by removing the reference to "§ 51.11(b)" and replacing it with "Subpart L": § 52.74(a)(2)(iv), § 52.784(a), § 52.1227(a), § 52.1974(a).

§ 52.2430 [Amended]

17. The following section is amended by removing the reference to "§ 51.11(c)" and replacing it with "§ 51.231(a)": § 52.2430(a).

18. The following sections are amended by removing the reference to "§ 51.11(f)" and replacing it with "§ 51.232(b)": § 52.775(a), § 52.874(b), § 52.1325(b), § 52.2430(b), § 52.2475(a).

§ 52.2678 [Amended]

19. The following section is amended by removing the reference to "§ 51.12(a)" and replacing it with "§ 51.110(a)": § 52.2678(a).

20. The following sections are amended by removing the reference to "§ 51.12(e)" and replacing it with "§ 51.110(h)": § 52.95(a), § 52.182(a), § 52.431(a), § 52.497(a), § 52.631(a), § 52.735(a), § 52.792(a), § 52.883(b), § 52.1115(a), § 52.1602(a), § 52.1883(a), § 52.2058(a), § 52.2176(a), § 52.2232(a), § 52.2345(a).

21. The following sections are amended by removing the reference to "§ 51.12(e) and (f)" and replacing it with "§ 51.110(h) and (i)": § 52.59(a), § 52.95(b), § 52.143(a), § 52.182(b), § 52.267(a), § 52.341(a), § 52.379(a), § 52.431(b), § 52.497(b), § 52.529(a), § 52.580(a), § 52.631(b), § 52.682(a), § 52.735(b), § 52.792(b), § 52.832(a), § 52.883(a), (b), § 52.929(a), § 52.1028(a), § 52.1115(b), § 52.1178(a), § 52.1229(a), § 52.1279(a), § .1338(a), § .1381(a), § 52.1528(a), § 52.1602(b), § 52.1688(a), § 52.1777(a), § 52.1827(a), § 52.1883(b), § 52.1927(a), § 52.1986(a), § 52.2249(a), § 52.2056(b), § 52.2082(a), § 52.2129(a), § 52.2176(b), § 52.2232(b), § 52.2302(a), § 52.2345(b), § 52.2379(a), § 52.2449(a), § 52.2496(a), § 52.2526(a), § 52.2580(a), § 52.2631(a), § 52.2674(a), § 52.2728(a), § 52.2778(a), § 52.2826(a).

22. The following sections are amended by removing the reference to "§ 51.13(e)" and replacing it with "Subpart G": § 52.57(a), § 52.125(a) (1) (b), § 52.126(a), § 52.133(c), § 52.227(a), § 52.675(a) (1), § 52.676(a)(1), § 52.776(a), § 52.1475(a), § 52.1476(a), § 52.1678(d), § 52.1880(a), § 52.1881(a), § 52.1976(a), § 52.2678(a), § 52.2731(a), § 52.2780(a).

§§ 52.794, 52.1117 and 52.2525 [Amended]

23. The following sections are amended by removing the reference to "51.13(e)(1)" and replacing it with "§ 51.112(a)": § 52.794(b), § 52.1117(b), § 52.2525(a),

24. The following sections are amended by removing the reference to "§ 51.14," and replacing it with "Subpart G": § 52.269(a), § 52.729(a), § 52.777(a), (b), § 52.784(a), § 52.785(a), § 52.1227(a), § 52.1486(a), § 52.1676(a), § 52.1877(a).

§§ 52.2431 [Amended]

25. The following section is amended by removing the reference to "§ 51.14(c)" and replacing it with "§ 51.112": § 52.2431 (d),

26. The following paragraphs are amended by removing the references to "§ 51.14(a)(2)," "§ 51.14(a)(1) (b) and (c)," "§ 51.14(a)(2) (iii), and (iv) and replacing them with "§ 51.111": § 52.2431(a), (b), (c).

27. The following sections are amended by removing the reference to "§ 51.15" and replacing it with "Subpart N": § 52.07(a), § 52.20, § 52.55(a), § 52.84(b), § 52.240(e), (f)(1), (f)(2), § 52.429(a), § 52.524(c), § 52.576(a), § 52.626(a), § 52.677(b), (c) § 52.730(c), (d), § 52.778(c), (d), § 52.825(c), § 52.876(c) (1) and (2), § 52.927(c), § 52.980(a), (b), (c), (d), § 52.1023(a), § 52.1125(a), (b), § 52.1175(e), § 52.1274(a), § 52.1335(a), (b), § 52.1425(a), § 52.1482(b), (c), § 52.1524(a), (c), (d), § 52.1577(e), § 52.1628(b), § 52.1774(a), § 52.1830(a), § 52.1975(b), § 52.2036(a), § 52.2077(b), (c), (d), § 52.2123(b), § 52.2223(c), (d), (f), § 52.2376(a), § 52.2435(a), § 52.2481(b), § 52.2524(c), § 52.2578(d), § 52.2578(e), § 52.2625(a), § 52.2730(a).

§§ 52.828 and 52.2078 [Amended]

28. The following sections are amended by removing the reference to "§ 51.15b (1) and (2)" and replacing it with "§ 51.281 (a) and (b)": § 52.828(1)(i), § 52.2078(b)(1)(f).

29. The following sections are amended by removing the reference § 51.15(b)" and replacing it with "§ 51.281": § 52.240(b), § 52.828(b)(1)(iii), § 52.1577(b), § 52.1677(a).

30. The following sections are amended by removing the reference to "§ 51.15 (b) and (c)" and replacing it with "§ 51.281 and 51.282(a)": § 52.84(d)(10), § 52.255(g), § 52.256(i), § 52.524(b)(7), § 52.730(b)(4),

§ 52.927(b)(6), § 52.1175(d)(4), § 52.1975(c)(12), § 52.2078(b)(iii), § 52.2223(e)(18), § 52.2285(g), § 52.2438(g), § 52.2439(i), § 52.2524(b)(10), § 52.2578(c)(4).

31. The following sections are amended by removing the reference to "§ 51.15(c)" and replacing it with "§ 51.262(a)": § 52.84(a), § 52.240(a), § 52.524(a), § 52.677(a), § 52.730(a), § 52.778(a), § 52.927(a), § 52.1080(a), § 52.1175(c), § 52.1524(b), § 52.1577(c), § 52.1626(a), § 52.1677(b), (c), § 52.1975(a), § 52.2077(a), § 52.2223(b), § 52.2481(a), § 52.2524(a), § 52.2578(b).

§ 52.274 [Amended]

32. The following sections are amended by removing the reference to "§ 51.16" and replacing it with "Subpart H": § 52.274(a), (b), (e), (h), (g).

§ 52.2227 [Amended]

33. The following section is amended by removing the reference to "§ 51.16(b)(3)" and replacing it with "§ 51.152(a)": § 52.2227.

34. The following sections are amended by removing the reference "§ 51.18" and replacing it with "Subpart I": § 52.10, § 52.21(b)(2)(iii)(*e*)(*1*), (b),(2)(iii)(*f*), (b),(17), § 52.24(f)(5)(iii)(*e*)(*1*), (f)(5)(iii)(*e*)(*2*), (f)(5)(iii)(*f*), (f)(6)(iii), (f)(6)(v)(*c*), (f)(12), § 52.78(a), § 52.129(e), § 52.232(a)(1)(i), (a)(5)(i)(A), § 52.426(a), § 52.574(a), § 52.629(a), § 52.780(e), § 52.878(a), § 52.1124(a), § 52.1225(a), § 52.1276(a), § 52.1328(a), § 52.1578(a), § 52.1824(a), § 52.2125(a), § 52.2228(a), § 52.2579(a), § 52.2623(a), § 52.2724(a), § 52.2824(a).

§§ 52.233 and 52.780 [Amended]

35. The following sections are amended by removing the reference to "§ 51.18(a)" and replacing it with "§ 51.160(a)": § 52.233(c), § 52.780(a).

§§ 52.129 and 52.233 [Amended]

36. The following sections are amended by removing the reference to "§ 51.18(c)" and replacing it with "§ 51.160(a)": § 52.129(b), § 52.233(c)(d).

§§ 52.1124 and 52.1879 [Amended]

37. The following sections are amended by removing the reference to "§ 51.18(h)" and replacing it with "§ 51.161": § 52.1124(c), § 52.1879(c).

§§ 52.24 and 52.688 [Amended]

38. The following sections are amended by removing the reference to "§ 51.18(j)" and replacing it with § 51.165(a)": § 52.24(j)(2), § 52.688(b)(2).

39. The following sections are amended by removing the reference to "§ 51.19(a)" and replacing it with "§ 51.211": § 52.130(a), § 52.234(a), § 52.1479(a), § 52.2075(a).

40. The following sections are amended by removing the references to "§ 51.19(b)," and "§ 51.19(c) and replacing them with "§ 51.212": § 52.234(b), (c), § 52.794(a), (b), § 52.1077(a), § 52.2030(b), (c).

41. The following sections are amended by removing the reference to "§ 51.19(d)" and replacing it with "§ 51.213": § 52.130(b), § 52.479(b), § 52.2298(b), § 52.2427(c), § 52.2477(a).

42. The following sections are amended by removing the reference to "§ 51.19(e)" and replacing it with "§ 51.214": § 52.130 (d), (e), § 52.234(e), § 52.796(a), § 52.1479(b), § 52.1680(a), § 52.2684(a).

43. The following sections are amended by removing the reference to "§ 51.20" and replacing it with "§ 51.280": § 52.135(a), § 52.175(a), § 52.978(a), § 52.2031(a), (b), § 52.2483(a).

44. The following sections are amended by removing the reference to "§ 51.21," and replacing it with "Subpart M": § 52.80(a), § 52.1579(a), § 52.2032 (a), (b), § 52.2433(a).

45. The following sections are amended by removing the references to "§ 51.22," and "51.22(b)" and replacing it with "§ 51.281": § 52.125 (a)(1), (b), § 52.128 (a), (c), § 52.133(c), § 52.272(a), § 52.795(b), § 52.988(a), § 52.1082 (a), (b), § 52.1635(a), § 52.2436 (a), (b).

§§ 52.21 and 52.24 [Amended]

46. The following sections are amended by removing the reference to "§ 51.24" and replacing it with "§ 51.166": § 52.21 (b)(2)(iii)(*e*)(*1*), (b)(2)(iii)(*e*)(*2*), (b)(2)(iii)(*f*), (b)(17), (f)(3), § 52.24 (f)(5)(iii)(*e*)(*1*), (f)(5)(iii)(*f*), (f)(12).

§§ 52.1331 and 52.2428 [Amended]

47. The following sections are amended by removing the reference to "§ 51.30" and replacing it with "§ 51.340": § 52.1331(a), § 52.2428 (a), (b).

§ 52.782 [Amended]

48. The following section is amended by removing the reference to "§ 51.31(c)" and replacing it with "§ 51.341": § 52.782(a).

49. The following sections are amended by removing the reference to Appendix N and replacing it with "Subpart G": § 52.88(a)(5), § 52.89(a)(4), § 52.90(a)(3), § 52.91(a)(3), § 52.786(a)(3), § 52.1678(a)(2), § 52.2038(a)(4), § 52.2039(a)(3), § 52.2337(a)(3), § 52.2485(a)(4), § 52.2491(a)(3).

§ 52.235 [Removed]

50. The following section is removed: § 52.235.

§ 52.230 [Amended]

51. Section 52.230(a) is amended by revising the first portion to read as follows: "The requirements of § 52.14(c)(3) of this chapter as of September 22, 1972 (47 *FR* 1983), are not met since the . . . ."

§ 52.828 [Amended]

52. Section 52.828(b)(1)(iii) is amended by placing a period after "and (c)" and by removing "and, if applicable, § 51.32 (a) through (e) of this chapter."

§ 52.876 [Amended]

53. Section 52.876(a) is amended by revising the first portion to read as follows: "The requirements of § 51.260 and of § 51.15(a)(2) of this chapter as of September 19, 1978 (40 *FR* 43218), are not met since the . . . ."

§ 52.1576 [Amended]

54. Section 52.1576(a) is amended by revising the first portion to read as follows: "The requirements of § 52.14(c)(3) of this chapter as of May 8, 1974 (39 *FR* 16346), are not met since the . . . ."

§ 52.1676 [Amended]

55. Section 52.1676(a) is amended by revising the first portion to read as follows: "The requirements of § 52.14(c)(3) of this chapter as of May 8, 1974 (39 *FR* 16347), are not met since the . . . ."

§ 52.2078 [Amended]

56. Section 52.2078(b)(1)(iii) is amended by placing a period after "and (c)" and by removing "and, if applicable, § 51.32 (a) through (e) of this chapter."

§ 52.2682 [Amended]

57. Section 52.2682(a) is amended by revising the first portion to read as follows: "The requirements of § 52.17(a)(2) of this chapter as of December 19, 1978 (43 *FR* 59067), are not met since the . . . ."

[FR Doc. 86-24433 Filed 11-6-86; 8:45 am]
BILLING CODE 6560-50-M

NOV 24 1986

MEMORANDUM

SUBJECT: Need for A Short-term Best Available Control Technology (BACT) Analysis for the Proposed William A. Zimmer Power Plant

FROM: Gerald A. Emison, Director
Office of Air Quality Planning and Standards (MD-10)

TO: David Kee, Director
Air Management Division, Region V (5AR-26)

This is in response to your November 17, 1986, memorandum, in which you requested comment on Region V's belief that prevention of significant deterioration (PSD) permits must contain short-term emission limits to ensure protection of the applicable national ambient air quality standards (NAAQS) and PSD increments. I concur with your position and emphasize to you that this position reflects our current national policy. Consequently, I recommend that you continue to identify this apparent deficiency to the Ohio Environmental Protection Agency and seek correction of the draft permit for the William A. Zimmer Power Plant.

The PSD regulations clearly require that the application of BACT conform with any applicable standard of performance under 40 CFR Part 60 at a minimum. However, this should not be taken to supersede any additional limitations as needed to enable the source to demonstrate compliance with the NAAQS and PSD increments. In the case of sulfur dioxide (SO_2), source compliance with the 30-day rolling average emission limit under subpart Da does not adequately demonstrate compliance with the short-term NAAQS and PSD increments. Consequently, enforceable limits pertaining to the performance of the flue gas desulfurization system on a short-term basis must also be established. Note, however, that the short-term limits can result from either BACT analyses or the need to protect air quality. Therefore, the short-term limit could be more stringent than the BACT limit.

I recognize that the sulfur variability issue tends to complicate the setting of short-term SO_2 emission limits, but such limits must be defined nevertheless. Continuous emission monitoring data from comparable sources can be used in order to estimate worst-case short-term SO_2 emissions that could occur at the plant. The modeling techniques used to determine compliance with the short-term NAAQS and increments should employ the enforceable short-term SO_2 emission limits which the permitting agency establishes.

ENVIRONMENTAL PROTECTION AGENCY

[FRL-3085-8]

Emissions Trading Policy Statement; General Principles for Creation, Banking and Use of Emission Reduction Credits

AGENCY: Environmental Protection Agency.

ACTION: Final policy statement and accompanying technical issues document.

SUMMARY: This Policy Statement replaces the original bubble policy (44 FR 71779, December 11, 1979) and makes final revisions in an Interim Emissions Trading Policy which was published April 7, 1982 (47 FR 15076) and on which further comments were requested August 31, 1983 (48 FR 39580).

The policy describes emissions trading and sets out general principles EPA will use to evaluate emissions trades under the Clean Air Act and applicable federal regulations. Emissions trading includes bubbles, netting, and offsets, as well as banking (storage) of emission reduction credits (ERCs) for future use. These alternatives do not alter overall air quality requirements; they give states and industry more flexibility to meet those requirements. EPA endorses emissions trading and encourages its sound use by states and industry to help meet the goals of the Clean Air Act more quickly and inexpensively.

However, EPA also recognizes that without strict accounting practices and other safeguards, emissions trades may cause potential environmental harm. Accordingly, this policy provides more explicit guidance on baselines and related tests for environmental equivalence and environmental progress. It includes numerous tightenings and clarifications meant to assure the future environmental integrity of bubbles and other trading transactions.

Among other general steps, the policy states that the lower of actual or allowable emissions must usually be used as the baseline for emissions trades. Divergences from this baseline will be allowed only where the state or applicant shows that any potential increase in actual emissions will not jeopardize National Ambient Air Quality Standards (NAAQS), PSD increments or visibility protection.

General showings to this effect may be made only by establishing that allowable values were clearly incorporated in or assumed by an approved demonstration of attainment or maintenance. Specific showings to this effect may be made only in narrow circumstances described in the accompanying Technical Issues Document.

Other general matters addressed and significantly clarified by this policy include requirements for air quality modeling and approvable state generic bubble rules, additional enforcement safeguards, and additional safeguards related to bubbles involving pollutants listed, regulated or proposed to be regulated under Section 112 of the Act.

This policy also sets forth new, tighter requirements for bubbles in primary nonattainment areas which require but lack approved demonstrations that national ambient standards for healthy air will be attained. In addition to requiring lowest of actual-SIP allowable-or-RACT-allowable emissions baselines in these areas, use of past shutdowns, curtailments or other reductions which occurred before application for credit is essentially eliminated, and a further reduction of at least 20 percent beyond the baseline is required. Broadly speaking, sources may secure bubble credit in these areas only if claimed reductions meet these baseline and further reduction requirements; were reasonably, objectively elicited by the opportunity to trade; and are accompanied by state assurances that the trade is consistent with the state's efforts to attain the ambient air quality standard. EPA will approve bubbles which meet these requirements because they are consistent with the attainment needs of these areas and will yield a net air quality benefit. Such bubbles can produce economic savings and environmental improvement at the same time.

The policy announced today does not constitute final action of the Agency within the meaning of section 307(b) of the Clean Air Act, and therefore is not judicially reviewable. Rather, it establishes general guidance on approvable voluntary trades. EPA will implement this guidance in later rulemaking actions that will be judicially reviewable. Applicants for emissions trades remain free, following publication of today's notice, to advance the appropriateness of different trading requirements in the context of rulemaking actions on their individual trades.

EFFECTIVE DATE: This Policy Statement is effective December 4, 1986.

FOR FURTHER INFORMATION CONTACT: Inquiries regarding the general implementation of this policy may be directed to: Barry Gilbert. Office of Air Quality Planning and Standards (MD-15). Research Triangle Park. NC 27711. (919) 541-5516.

Inquiries regarding specific applications to use this policy may be directed to the appropriate EPA Regional Office (see Appendix A of the Technical Issues Document)

Inquiries regarding the development and basis of this policy may be directed to: Barry Elman. Regulatory Reform Staff (PM-223). U.S. Environmental Protection Agency. 401 M Street SW.. Washington. DC 20460. (202) 382-2727

SUPPLEMENTARY INFORMATION: Under Executive Order 12291. EPA must judge whether this action is "major" and *therefore* subject to the requirement of a Regulatory Impact Analysis. This action is not major because it establishes policies. as opposed to regulations. and can substantially reduce the costs of complying with the Clean Air Act

This Policy Statement was submitted to the Office of Management and Budget for review. Any comments from OMB to EPA are available for public inspection in Docket G-81-2. Pursuant to U.S.C. 605(b). I hereby certify that this action will not have a significant economic impact on a substantial number of small entities. As a policy designed to allow firms flexibility to meet previously established regulatory requirements. it will impose no burdens on either small or large entities.

The contents of today's preamble are indicated in the following outline. The outline is followed by the preamble itself. and then by the Policy Statement and accompanying Technical Issues Document.

Table of Contents: Preamble

I. Introduction
II. Major Issues
A. Baselines
1. Determining Baselines—General Guidance
2. Comments on Baselines in Nonattainment Areas with Approved Demonstrations of Attainment
3. EPA's Resolutions on Baselines in Nonattainment Areas with Approved Demonstrations of Attainment
B. Baseline and Other Requirements for Bubbles in Primary Nonattainment Areas Which Require But Lack Approved Demonstrations of Attainment
1. EPA's Resolutions Regarding Baseline and Other Requirements
a. Specific "Progress" Requirements
b. Additional "Progress" Requirement: State Assurances
2. Basic Rationale
3. Additional Considerations Regarding the Benefits of Bubbles
III Additional Policy Changes and Clarifications
A. Generic Bubble Rules
1 Substantive Progress Requirements
2. Procedural Requirements
B. Bubbles Involving Hazardous or Toxic Air Pollutants
C Banking Emission Reduction Credits (ERCs)
D. OBERS Projections and Double-Counting
E Improved Modeling and *De Minimis* Requirements
1. *De Minimus* Levels
2. Modeling Requirements
F Enforcement Issues

PREAMBLE—EMISSIONS TRADING POLICY STATEMENT

I. Introduction

Today's policy makes final the Agency's prior guidance on general principles for creating, storing (banking) and using emission reduction credits in trading actions under the Clean Air Act. This preamble responds to written comments EPA received on major issues raised by its proposed emissions trading policy statement (47 FR 15076. April 7. 1982) and subsequent request for further comment (48 FY 39580. August 31. 1983). It also explains the Agency's principal decisions on these issues.

Today's notice is the primary source of EPA guidance on existing-source bubbles. state generic bubble rules. and emission reduction banking. It replaces the original bubble policy (44 FR 71779. December 11. 1979) as well as the proposed emissions trading policy statement. which was effective April 7. 1982 as interim guidance. The notice addresses how emission reduction credits (ERCs)—the currency of trading—may be used for bubbles. as well as for netting or offsets. Netting and offsets are part of emissions trading, but are governed by EPA and state regulations for new source review.[1]

Nothing in today's notice alters EPA new source review requirements or exempts owners or operators of stationary sources from compliance with applicable preconstruction permit regulations in accord with 40 CFR 51.18. 51.24. 51.307. 52.21. 52.24. 52.27 and 52.28. Interested parties should. however. be aware that bubble trades are not subject to preconstruction review or regulations where these trades do not involve construction. reconstruction. or modification or a source within the meaning of those terms in the regulations listed above.

The policy announced today does not constitute final action of the Agency within the meaning of section 307(b) of the Clean Air Act. and therefore is not judicially reviewable. Rather. it establishes general guidance for reviewing and approving voluntarily submitted trades. EPA will implement this guidance in later rulemaking actions that will be judicially reviewable. Applicants for emissions trades remain free. following publication of today's notice. to advance the appropriateness of different trading requirements in the context of rulemaking actions on their individual trades.

Under today's notice, EPA continues to authorize use of bubbles. banks. and generic bubble rules in all areas of the country, and provides for the fair and prompt processing of bubble applications which have been pending before EPA under the 1982 policy. However. based on experience under the 1982 policy, and in order to ensure the environmental integrity of future emissions trades. today's notice significantly tightens requirements applicable to certain trading actions. particularly existing-source bubbles in primary nonattainment areas which require but lack demonstrations of attainment. It also clarifies approval criteria in ways which should make review and approval of environmentally-sound trades more rapid and predictable. Among other safeguards or safeguarding clarifications. it requires that

- Bubbles may no longer result in any increase in applicable net baseline emissions in any area. whether attainment or nonattainment. except under stringent conditions which assure that ambient equivalence will nevertheless be achieved;[2]
- Baselines for sources participating in a bubble in any area must take into account all three factors relevant to total emissions (i.e.. emission rate. capacity utilization. and hours of operation) in order to provide an accurate accounting of emissions before and after the trade;

[1] See. e.g.. 40 CFR 51.18. 51.24. 51.307. 52.21. 52.24. 52.27 and 52.28.

On November 7. 1986. EPA restructured CFR Part 51 and renumbered many of that Part's sections (51 FR 40658). Because most readers will be more familiar with prior designations. today's notice contains citations based on the organization of Part 51 as it existed before this restructuring. Interested parties may use Appendix F of today's Technical Issues Document to convert today's Part 51 citations to the corresponding new ones.

[2] This change constitutes a significantly more stringent definition of what may be considered a bubble under the Emissions Trading Policy. Specific ambient tests which must be met to qualify for an exception from this restriction can be found in the Technical Issues Document. Section I.B. Actions which may no longer be treated as bubbles under today's notice must be processed under general EPA criteria applicable to SIP revisions.

• Bubbles in primary nonattainment areas needing but lacking approved demonstrations of attainment must use the lowest-of-actual-SIP-allowable-or-RACT-allowable emissions baseline, as described below, for each source involved in the trade;

• Bubbles in primary nonattainment areas needing but lacking approved demonstrations must contribute to progress toward attainment by providing a 20% net reduction in emissions remaining after application of the baseline above to all sources involved in the trade or, if the bubble is being processed under a state generic rule, the greater of a 20% net reduction or the percent reduction which would be required from all controllable stationary sources in that area (e.g., taking into account expected mobile source reductions and disregarding area-source contributions) in order to achieve attainment;

• Bubbles in attainment areas and nonattainment areas with approved demonstrations must use the lower of actual or allowable values for each of the three baseline components, unless allowable values higher than corresponding actual values are clearly used or reflected in the demonstration or otherwise shown not to jeopardize ambient standards, PSD increments or visibility;

• In all areas, emission reductions must be made state-enforceable in order to qualify as ERCs and be deposited in an EPA-approvable bank;

• In all areas, bubbles must meet more stringent tests for ambient equivalence, including additional ambient significance levels, more protective air quality modeling requirements, and more conservative definitions of *de minimis* trades;

• In all areas, the total of any incidental emissions of hazardous or potentially hazardous air pollutants associated with a criteria pollutant in a bubble trade must remain equal or be decreased, whether such hazardous pollutants have been regulated, proposed for regulation, listed, or the subject of a notice-of-intent-to-list under Clean Air Act 112;

• States must provide assurances to EPA that bubbles submitted for EPA approval in primary nonattainment areas needing but lacking approved demonstrations are consistent with the state's SIP-planning and attainment objectives. For generic rules, the state must make certain assurances in conjunction with its submittal of the generic rule to EPA, and certain additional assurances with the state's proposed and final approval of each individual bubble under that rule;

• Bubbles in such primary nonattainment areas may not use credits from reductions made before application to bank or trade such credit;

• Where sources in such areas seek to bank credits in the future, "application to bank," for purposes of evaluating credits for use in bubbles, means the time of filing an application to make the proposed credits state-enforceable through or concurrent with use of a formal or informal banking mechanism;

• Bubbles must not impede compliance or enforcement (e.g., the policy states that compliance extensions may no longer be granted under generic rules in any nonattainment area, and that bubble applications do not *per se* suspend underlying SIP limits or defer source obligations to achieve those limits);

• Generic rules in all areas will be subject to increased EPA oversight, including EPA participation in the state's public notice and comment process prior to state approval of individual bubbles, subsequent reviews of individual generic approvals, and reviews of the general implementation of the rules themselves, in order to assure that approved rules are being properly implemented; and

• EPA or state notices of proposed and final bubble approvals, in all areas, must clearly indicate any changes in actual as well as allowable emissions at all sources involved in the bubble, so the ambient effects of these trades may be known.

These and other changes announced today will generally be applied to all SIP revision bubbles and state generic bubble rules that have not been approved by EPA as of this date.[3]

On June 25, 1984 the Supreme Court unanimously ruled that EPA may allow states to use a single, plantwide definition of "stationary source" for new source review (NSR) purposes in nonattainment areas as well as attainment areas, provided use of that definition would not interfere with attainment and maintenance of national ambient air quality standards (NAAQS).[4] Under the "plantwide" definition, increases and decreases occurring anywhere on plant property from emission units within the same two-digit SIC code are generally eligible for netting,[5] and may be used to balance each other without triggering preconstruction permit requirements for major new sources or modifications so long as actual plantwide emissions would not significantly increase.

States and sources considering the use of netting should, however, be aware that applicable New Source Performance Standards (NSPS), preconstruction review requirements under 40 CFR 51.18 (a)–(h) and (t), NESHAPS, and SIP limits continue to apply to such modifications. EPA is currently developing guidance for states that wish to adopt a plant-wide definition of "source" for nonattainment areas into their new source review regulations.[6]

Pending or future litigation or rulemaking, particularly final resolution of the settlement agreement arising from the industry challenge to ERA's 1980 promulgation of revised NSR rules (*Chemical Manufacturers Association* v. *EPA*, No. 79–1112, D.C. Cir., February 1982), may alter aspects of this policy, especially regarding certain transactions under EPA new source review regulations. See 48 FR 28742 (August 25, 1983) (proposed revisions). However, unless and until EPA finally revises the relevant regulations, the current requirements remain in effect.

II. Major Issues

A. Baseline

The baseline for a given source is that level of emissions below which any additional reductions may be counted (credited) for use in trades. Questions relating to appropriate bubble baselines for particular emitting sources or types of sources in nonattainment areas generated the principal issues resolved by today's notice. EPA's resolutions strengthen SIP integrity and states' ability to make progress toward attainment by (a) identifying more

---

[3] See, however, discussion of "pending bubbles" in Section I.C. of today's Policy Statement and Section I.A.1.b(4) of today's Technical Issues Document.

[4] *Chevron U.S.A., Inc.* v. *Natural Resources Defense Council*, 104 S. Ct. 2778, 14 ELR 20507, overruling *Natural Resources Defense Council, Inc.* v. *Gorsuch*, 685 F.2d 718, 12 ELR 20843 (D.C. Cir. 1982).

[5] SIC Code means codes described in the Standard Industrial Classification Manual, 1972, amended 1977 (U.S. Government Printing Office stock numbers 4101-0066 and 003-005-00176-0, respectively).

[6] Many states currently employ the so-called "dual definition" of "stationary source," under which both the plant and each emitting piece of equipment within it are "stationary sources." Under this definition, when any individual piece of equipment is large enough in terms of potential emissions to be defined as a "major stationary source," only increases and decreases in actual emissions from that individual unit are eligible to "net."

While the plantwide definition provides greater opportunity for netting in general, netting is also allowed under the dual definition. Indeed, where no individual piece of emitting equipment is a "major stationary source," the "dual definition" allows the same opportunity to "net" as the "plantwide" definition.

precisely the three factors which must be addressed in calculating baseline emissions: (b) reaffirming that for bubbles in nonattainment areas with demonstrations of attainment that have been approved and not subsequently found by EPA to be substantially inadequate to attain ambient standards, the baseline must be consistent with assumptions used to develop the area's demonstration or must otherwise be shown by appropriate ambient dispersion modeling to protect air quality standards; and (c) specifying a number of special "progress" requirements for bubbles in primary-nonattainment areas needing but lacking approved demonstrations of attainment, including stringent new baseline requirements, a ban on the use of reductions produced before application to bank or trade, and a mandatory extra reduction of at least 20% beyond applicable baseline emissions. Together with tightened criteria for modeled demonstrations of ambient equivalence, as well as other new requirements for bubbles, banks, and generic rules, these resolutions will assure continued environmental progress through trades.

1. Determining Baselines—General Guidance

A source's baseline emissions are calculated by multiplying three factors: the source's *emission rate* (usually expressed as emissions per quantity of production or throughput); its *hours of operations* or hourly usage over some representative time period; and its *capacity utilization* (e.g., the units of production per hour of use).[7] All three factors must be addressed, since a source's emissions for a given period may vary widely despite a constant emission rate, depending, for example, on whether it is operated at low capacity for a small number of hours or utilized near full capacity for a large number of hours. The product of this baseline calculation is generally expressed in pounds of emissions per day or tons of emissions per year (TPY), or both.

Today's policy clarifies EPA's original intent regarding appropriate methods for determining these three baseline factors. In general, in nonattainment areas with approved demonstrations, a source's baseline emissions for bubble purposes must be calculated using the lower of it actual emission rate or allowable emission limit, plus the lower of its actual or allowable capacity utilization and hours of operation. That is, baseline emissions in these areas must generally be calculated using lower of actual or allowable values for all three baseline factors.[8]

Actual values for these factors are based on some representative historical time period (generally the average of the two years preceding the source's application to bank or trade).

However, where the state or applicant shows that the SIP, a source-specific preconstruction permit, or an equivalent document clearly assumes or specifies allowable values which are higher than corresponding actual values for one or more baseline factors, and that document post-dates the baseline inventory year for a SIP's attainment demonstration, these values may replace actual values for calculating the bubble baseline. Where only one value (typically the emission rate) is specified, the other two baseline factors must generally be based on actual levels.[9]

Such showings must be based on either data from the SIP or data used in SIP preparation.[10] Applicants may alternatively perform appropriate modeling to demonstrate that use of allowable values which are higher than actual values will not delay or jeopardize attainment and maintenance of ambient standards, protection of PSD increments, or visibility. Upon either type of showing, these allowable values may be used.[11]

This approach is required because control of existing sources through approved SIP measures is the Clean Air Act's principal mechanism for timely attainment, and because many approved demonstrations either do not contain stated assumptions regarding all three baseline factors, or were based on combinations of actual and allowable values for these factors. It recognizes that bubble baselines must accurately reflect the SIP assumptions for all three baseline factors in order to maintain SIP integrity.

Under this approach, determination of bubble baselines consistent with approved demonstrations is a sequential, tiered process. That process was implicit in both EPA's 1982 policy and its 1983 request for further comment, as well as actual practice in bubble actions under those notices. EPA is making it explicit in response to concerns that "paper trades" might undermine attainment demonstrations because approved SIPs do not always state all assumptions on which their demonstrations rely. By requiring that unstated or ambiguous values for all baseline factors *be resolved in favor of lower actual values*, today's notice provides additional assurance that bubbles in nonattainment areas with approved demonstrations will not threaten ambient standards, PSD increments, or visibility protection.

2. Comments on Baselines in Nonattainment Areas With Approved Demonstrations of Attainment

Comments on baselines in these areas indicated wide disagreement over where EPA require states to set this baseline level. The 1982 policy noted that "In nonattainment areas with approved demonstrations of attainment, the baseline must be consistent with assumptions used to develop the area's SIP." That policy generally required that where approved SIP demonstrations relied on *actual* emission levels at particular sources, those actual levels would have to be reflected in bubble baselines. Where SIP demonstrations were based on *allowable* emissions, the 1982 policy authorized baselines reflecting such allowable levels, despite the fact that some sources' actual emissions are currently or historically lower than their "allowables."[12]

---

[7] For detailed discussion of baseline emissions and baseline factors, see Technical Issues Document, Appendix B.

[8] Netting and offset transactions are governed by EPA's regulations at 40 CFR 51.18, 51.24, 51.165, 52.21, 52.24, 52.27 and 52.28. Accordingly, this discussion of baseline applies only to bubbles.

[9] See Section I.A.1 and Appendix B of today's Technical Issues Document for further details on baseline calculations.

[10] This could include documentation such as the demonstrations calculations themselves, accompanying materials, or affidavits from those who constructed the demonstrations.

[11] Use of such higher allowable values which must be justified by modeling because they are not shown to be clearly reflected in or assumed by the demonstration or an equivalent document, would require such bubbles in nonattainment areas with approved demonstrations to be processed as SIP revisions, since Level III modeling would be required for their justification under today's modeling screen. In addition, the SIP's reasonable further progress (RFP) calculations would generally have to be revised.

The principal difference between use of such higher allowable values in these nonattainment areas and in attainment areas is that in attainment areas, ambient evaluations more limited than Level III modeling may justify use of such allowable values. However, for bubbles processed as case-by-case SIP revisions in attainment areas, the Region retains discretion to require additional technical support, where limited air quality dispersion modeling is proposed to justify use of such allowable baseline values. See Section I.A.1.a. of today's Technical Issues Document.

All bubbles in attainment areas relying on allowable values not used or reflected in an approved demonstration must be evaluated for ambient impact based on a comparison of before-trade actual emissions and post-trade allowable emissions (i.e., the "worst case"), in order to assure that any potential increase in actual emissions are identified and that their effects are consistent with applicable Clean Air Act requirements. See today's Technical Issues Document, Section I.A.1.a.

[12] See n. 13 below.

The great majority of commenters supported this SIP foundation for trading baselines, noting that SIPs are the cornerstone of the Act's approach to air quality management. These commenters also asserted that regardless of sources' actual emissions, measuring reductions from allowable levels assumed in a valid SIP demonstration was entirely appropriate for use in trading, since the area would still attain ambient standards in a timely manner. See, e.g., 48 FR 39582 (August 31, 1983).

However, other commenters asserted this approach was either "too loose" or "too tight." The first group stated that credit should only be granted for reductions below current actual emissions, provided actual emissions met applicable SIP limits.[13] They advanced various reasons for this position, including assertions that reliance on past reductions, while consistent with approved plans for attainment, might not comport with "broader" clean air goals. Some felt that SIPs were insufficently precise to serve as a basis for trading.

A second group of comments went in the opposite direction, asserting that baselines should always be maximum allowable source emissions, regardless of assumptions used in SIP development. These commenters noted that emission *rates* (e.g., emissions per volume of throughput or unit of production) specified in SIP emission limits are generally the only enforceable limits applicable to existing sources. Since existing sources can legally emit up to annual levels equivalent to maximum output and round-the-clock operations so long as they meet these SIP emission-rate limitations, these commenters reasoned, companies should receive credit for agreeing to binding limits on output or hours of operations which forgo such production flexibility.

Today's notice responds in two principal ways to these concerns. First, it clarifies the components of baselines, how these are to be determined, and who bears the burden of demonstrating that a proposed baseline is consistent with a particular SIP. Several comments indicated that confusion related to the determination of baselines may have generated unnecessary concern over use of allowables baselines under approved SIPs. Second, it reiterates and further supports EPA's position that *where SIP demonstrations are approved as adequate*, the Clean Air Act simply requires trading to be consistent with assumptions used to develop the area's SIP.

3. EPA's Resolutions on Baselines in Nonattainment Areas With Approved Demonstrations of Attainment

Where a state has demonstrated it will attain an ambient standard, and EPA has approved the demonstration and not subsequently found it substantially inadequate to assure attainment, bubbles relying on baseline levels used or reflected in that demonstration amount to routine SIP revisions. The state then has discretion to maintain its demonstration through any alternative combination of emission reductions, so long as these are adequate for attainment and maintenance of the ambient standards. Since EPA cannot require states to do more than demonstrate timely attainment and maintain ambient standards, EPA will approve such trades as long as they are enforceable and do not undermine the demonstration. See, e.g., *Train* v. *NRDC*, 421 U.S. 60, 79–80 (1975); *Union Electric Co.* v. *EPA*, 427 U.S. 246 (1976). This means that credits must not be doubled-counted, that they must be calculated from a baseline consistent with the approved demonstration, and that tests of air quality equivalence to the original SIP emission limits must be met.

In short, under the Clean Air Act an approved attainment demonstration creates a legal and logical boundary. The state has met its statutory responsibility and can substitute reductions not relied on in the SIP for those assumed by the SIP, so long as air quality impacts are equivalent. This holds true for all types of emission reductions—whether derived from process changes, extra pollution control equipment, improved operating or maintenance procedures, or other actions—as long as the substitute reductions have not been relied on in the approved SIP.[14]

EPA accordingly reaffirms the general principle that states may grant sources credit for reductions below levels assumed by approved demonstrations. This generally means that where actual values for emission rate, capacity utilization and hours of operation form the basis for an approved demonstration, sources proposing a bubble must use the lower of actual or allowable values for those factors in calculating baseline emissions, and that where an approved demonstration was based on allowable values which are higher than corresponding actual values for any of these baseline factors, those allowable values may be used for such factors in calculating the baseline.

B. Baseline and Other Requirements for Bubbles in Primary Nonattainment Areas Which Require But Lack Approved Demonstrations of Attainment

EPA's 1982 policy proposed two baseline mechanisms for bubbles in primary nonattainment areas needing but lacking approved demonstrations of attainment. These areas needed additional emission reductions to attain national ambient health standards, but had not yet fully determined what amount of reductions would be necessary for attainment or which sources would be required to produce them. Nevertheless, that policy said, states could allow existing sources in these areas to trade on an interim basis, either (1) by using baselines reflecting Reasonably Available Control Technology (RACT) provisions which EPA had already approved, or (2) where EPA had not yet approved general state RACT provisions, by using "negotiated RACT" baselines agreed to between the source, the state and EPA.[15] Both the 1982 policy and subsequent notices advanced detailed programmatic and environmental rationales for this approach, including the fact that RACT was the Act's most stringent general requirement for existing sources in nonattainment areas; that appropriately determined RACT baselines were consistent with current attainment needs; and that trades using such baselines could produce faster interim progress by providing incentives for sources voluntarily to define RACT, disclose better emissions or ambient data, or take other steps to do more than the minimum required. See, e.g., 47 FR 15078, 15080–81; 48 FR 39582–83, 39585.

Many commenters on the 1982 policy approved this "negotiated RACT"

[13] The 1982 policy assumed, but did not specify, the components of "actual" emissions, such as capacity usage or number of hours of operation of a particular source. It also assumed, but did not expressly require, that actual emission levels must be reduced to compliance levels before further reductions were eligible for credit.

[14] It also holds true where the Agency may suspect, but has not formally indicated, that a previously approved SIP demonstration is no longer adequate to assure timely attainment. For reasons of policy continuity, regulatory predictability and fair notice, until EPA makes a formal finding of SIP inadequacy, the approved demonstration controls. See Clean Air Act section 110(a)(2)(H), 110(c)(1); 48 FR 39582 (August 31, 1983).

[15] The 1982 policy also authorized limited use of higher actual (rather than RACT-allowable) baselines in certain nonattainment "extension" areas which did not then have complete approved SIPs. See 47 FR 15077, 15080 (April 7, 1982). Expiration of the July 1982 statutory deadline for submitting such SIPs vitiated this third baseline option. See, e.g., 48 FR at 39580 and n.1, 39582 and n.7, 39584–85 (August 31, 1983).

approach, finding it innovative and acceptable. However, two groups of commenters again asserted that it was either "too restrictive" or "insufficiently constrained." The first group maintained that for reasons of administrative efficiency, bubbles should be based either on existing SIP reduction requirements or on actual emissions, without the need to negotiate new source-specific RACT baselines. Since trading sources in these areas would eventually be subject to RACT requirements in any case, they reasoned, no new interim baseline should be required. In partial support of this position some alluded to the one instance in which Congress has explicitly addressed such baseline issues—its 1977 declaration that in nonattainment areas without adequate demonstrations, existing SIP limits would for the next several years be the baseline for offset transactions, which were then the only types of emissions trades.[16]

The second group asserted that no bubbles should be allowed in such areas, since regulators could not know which reductions were surplus until demonstrations were completed and approved.

In August 1983, "in light of formal comments on the [1982] Policy, the *NRDC v. Gorsuch* decision [since reversed] . . . and the need to further articulate the Policy's approach in this area," EPA requested further comment on certain issues relating to credit from plant shutdowns or production curtailments for use in existing-source bubbles, particularly bubbles in primary nonattainment areas requiring but lacking demonstrations. 48 FR 38580. While most comments on the 1982 policy supported continued use of such credits without further restrictions, some commenters had special concerns about shutdowns in these areas. These commenters stated that shutdowns can hasten attainment, and suggested that granting credit for shutdowns that 'might have happened anyway' might not be consistent with the Act's requirement for attainment "as expeditiously as practicable."

In the August 1983 notice EPA addressed these concerns in detail, noting that:

> . . . Unlike surplus reductions from additional pollution control or less-polluting process changes, shutdowns produce a total reduction of emissions, 100% of which might benefit air quality if credit were not allowed. Granting full or partial credit for their use in existing-source bubbles might reduce that benefit . . . at least where the source would have shut down anyway. This reasoning [reflecting a desire to avoid granting credit for reductions that may not be "surplus" because they would have occurred in any event] underlies some commenters' suggestions that credit be allowed only if credit were a sole or principal reason for the shutdown . . .
>
> Unfortunately the issue is not this simple. So long as it has not been double-counted and a proper RACT baseline is applied, the shutdown does contribute to air quality progress, since much less than 100% credit will be granted. Moreover, the opportunity for credit may improve air quality by encouraging early shutdown of high-polluting facilities that might otherwise be kept running, either because replacement is too expensive or to preserve credit for further plant expansion.
>
> In addition, these commenters' suggestion of a test based on subjective motive appears administratively unworkable. EPA and states would find it exceedingly difficult to evaluate or rebut source evidence that a shutdown was motivated by credit and that the shutdown facility would otherwise have operated [, e.g.,] for twenty or forty years. Thus this approach would likely result in either *de facto* approval of all such credits [undermining the reason for the test], or a burden of proof so stringent that none would be approved [penalizing sources whose shutdowns were elicited by trading]. More straightforward approaches might either ban shutdown bubbles until a demonstration of attainment, or acknowledge their uncertain nature by applying a margin of safety—e.g., a requirement that such bubbles produce substantial air quality improvement—sufficient to compensate for any uncertainties and protect the integrity of current or future SIPs. 48 FR at 38583–84 (footnotes omitted.)

EPA then suggested seven specific alternatives to the 1982 policy for bubbles in these areas, including: a prohibition on bubble credit from shutdowns; a requirement of substantial air quality benefit from bubbles proposing to use shutdown credit; or a requirement of substantial air quality benefit from all bubbles, with no special restrictions on shutdown credit. In partial support of this last proposed alternative, EPA indicated the administrative benefits of avoiding special definition or treatment of "shutdowns" and "curtailments," and stated that:

> . . . Requiring substantial progress from each bubble . . . could accelerate momentum toward attainment, directly improve air quality through each trade, and provide an objective margin of safety against uncertainties associated with some individual shutdowns, while leaving to the state the task of final SIP development. It would also maintain the incentive within the [1982] Policy for industry to shut down high-polluting, economically-marginal sources . . . . The more each existing-source bubble contributes directly to accelerated air quality progress, the stronger the justification for use of surplus reductions for such bubbles in the absence of a demonstration. Moreover, requiring all bubbles to produce a substantial air quality improvement, beyond RACT baselines and RACT equivalence, could provide a margin of safety sufficient to make special treatment of shutdowns unnecessary . . . 48 FR at 38585–86 (footnotes omitted).

Thus, while the issue explicitly raised by the August 1983 notice was use of bubble credit from shutdowns in primary nonattainment areas which lack approved demonstrations, the underlying issue was use of *any* type of bubble credit in these areas. Since emission reductions have the same effect on air quality whether produced by less-polluting process changes, more efficient operation of installed control equipment, additional pollution controls, or shutdowns or production curtailments, the fundamental question was whether *all* such reductions or no of them should be prohibited or subject to special requirements when used for bubbles in these areas. That question reflected a further choice. Should EPA defer bubbles in these areas until a compete demonstration was finally approved? Or should EPA authorize continued use of bubbles, in order to secure interim emission reductions?

Comments responding to the August 1983 notice were essentially the same as earlier ones. A large majority of industries and state pollution control agencies commenting at that time supported continued opportunity for bubbles (including those using credit from shutdowns) in nonattainment areas with or without approved demonstrations. Virtually all industries and states commenting with respect to areas that *have* approved demonstrations supported continued use of the 1982 policy, without change.[17] Of 13 state agencies commenting with respect to areas that *do not have* approved demonstrations, ten urged that shutdown credits be retained for these

---

[16] See, e.g., Clean Air Act Amendments of 1977, section 123, codified at 42 U.S.C. 7502 note; 3 *Legislative History of the Clean Air Act Amendments of 1977*, pp. 537, 713; 44 FR 2174–75 (January 16, 1979). This Congressional mandate was largely superseded by eventual state adoption of superseding SIP limits. Under current EPA regulations such SIP allowable emission rates may ordinarily be used to compute the baseline for offsets only where an approved SIP demonstration used inventoried allowable emissions in its demonstration of reasonable further progress. See Clean Air Act 173(1)(A), 42 U.S.C. 7503(1)(A).

[17] E.g., Allegheny County (PA) Health Department, Bureau of Air Pollution Control; Air Pollution Control District of Jefferson County (Louisville), KY; Cf. Dayton (OH) Regional Air Pollution Control Agency. See also, e.g., comments of Chevron USA.

areas as well.[20] However, many comments also supported or acknowledged the appropriateness of a requirement for a net air quality benefit—in the range of 20% extra reductions in emissions remaining beyond a baseline reflecting RACT emission limits—from each bubble, so long as that requirement was objective and easily administered.[19] To the extent they addressed this issue, these comments generally opposed efforts to test bubbles by examining the subjective motives underlying reductions.[20] Two state of local agencies asked that bubbles be prohibited in these areas until complete demonstrations were approved by EPA.

Several commenting environmental groups asserted that EPA should not permit any bubbles in nonattainment areas lacking adequate demonstrations. One argued that EPA cannot determine that emission reductions are "surplus," and therefore creditable, in these areas because to do so would violate the statutory requirement to attain standards "as expeditiously as practicable." Moreover, this group claimed, using RACT as a baseline would not solve this problem because RACT limits are *minimum measures*, not a substitute for a SIP providing timely attainment. This group also asserted that crediting shutdowns would conflict with states' duty to meet air quality standards "as expeditiously as practicable" because, by "resurrecting" emissions that have already ceased, it would accomplish less emission reduction than is practicable within a given period of time. Another group asserted that allowing shutdown credits in these areas would strain efforts to progress toward attainment. One environmental group went a step further and urged that opportunity for bubbles be restricted solely to attainment areas which have already met national air quality standards.[21]

[19] E.g., Memphis Health Department; Colorado Dept. of Health, Air Pollution Control Division. Cf. comments of Illinois EPA.

Many industrial commenters also asserted the importance of continuing to allow shutdown credits in these nonattainment areas. See, e.g., Chevron USA; Champlin Petroleum.

[20] E.g., Bay Area (CA) Air Quality Management District. See also Southern California Gas Co.

[21] E.g., Massachusetts Department of Environmental Quality Engineering; South Coast (CA) Air Quality Management District.

[21] In oral or written submissions to the Administrator made in early 1986 while final decisions on today's policy were still pending, representatives of seven states and the State and Territorial Air Pollution Program Administrators and the Association of Local Air Pollution Control Officers (STAPPA/ALAPCO) similarly urged that bubbles no longer be authorized in primary nonattainment areas until a complete attainment demonstration was submitted or approved. This position was generally echoed by a coalition of environmental groups. Since this position and related underlying issues had been raised and articulated at length by earlier comments, it is addressed as part of the Agency's final response below.

At the same time, comments filed on Federal Register proposals to approve individual bubbles as SIP revisions under the 1982 policy[22] raised related issues. Several of these proposed bubbles were also located in primary nonattainment areas which required but lacked approved demonstrations. The issue raised related to bubbles of two types: (1) Those which relied on reductions from shutdowns that occurred long before any application to bank or trade; and (2) those which relied on extra reductions produced by routine installation of required control equipment, long before application to bank or trade. Both types of bubbles raised the larger question of whether SIP integrity and environmental progress might better be assured in primary nonattainment areas which require but lack approved demonstrations of attainment by allowing no bubble credit, or allowing bubble credit only for reductions beyond actual emission levels already achieved *as of the time sources applied to bank or trade*.

The final policy strikes what EPA believes to be a reasonable, environmentally-sound balance between all these views, and establishes numerous tightening clarifications and new requirements to implement that balance. These changes and the rationales supporting them are set forth below.

1. EPA's Resolutions Regarding Baseline and Other Requirements

In primary nonattainment areas which require but do not, *at the time of a* bubble application, have EPA-approved demonstrations that ambient health standards will be attained, bubbles will generally be approved if they do not rely on reductions which occurred before application for credit, if they meet other criteria for baselines, ambient equivalence, and consistency with future planning efforts; and if they produce at least a 20% net reduction in emissions remaining after appropriate baselines have been applied. These objective tests both respond to previous comments on certain individual bubble applications, and go substantially beyond alternatives discussed in EPA's August 1983 notice. At the same time, they assure greater predictability and ambient progress without imposing a heavy a burden on voluntary bubble transactions that the environmental benefits of such trades are forgone. They reflect the general principle that bona fide such properly-structured bubbles provide continuing incentives for sources to deliberately overshoot regulatory marks (rather than plan merely to meet them), bubble trades in these areas can produce interim progress beyond current SIP requirements, and should be approved.

a. *Specific "Progress" Requirement:* Applications for existing-source bubbles in primary nonattainment areas which require but lack approved demonstrations of attainment will be deemed to produce a net air quality benefit and will be processed for approval if they:

(i) Use "lowest-of-actual-SIP-allowable-or-RACT-allowable" emissions baselines. Such baselines must be calculated using

- Either the actual emission rate, the SIP or other federally enforceable emission limit, or a RACT emission limit, whichever is lowest, for each source involved in the trade. This baseline factor shall be determined as the time of the source's application to bank or trade, whichever is earlier.
- The lower of actual or allowable capacity utilization and hours of operation for each source involved in the trade. These baseline factors shall generally be based on the two years of operation preceding the application to bank or trade, unless another two year period is shown to be more representative of normal source operations.

(ii) Meet the *general ambient* equivalence tests outlined in today's policy (see Section I.B.1.b of the Technical Issues Document) using the baselines described above and, for the post-bubble case, emission levels that reflect overall *emissions* equivalence; and

(iii) Produce a substantial net reduction in actual *emissions*—i.e., a reduction of at least 20% in the emissions remaining after application of the stringent new baselines described above. (A reduction of greater than 20% may be required for bubbles approved under generic rules in some of these nonattainment areas. See discussion in Section III.A.1.(d) of this Preamble, below.)

With respect to sources which seek to bank emission reductions after publication of today's notice, "application to bank," for purpose of eventually crediting for use in bubbles, means the time of filing of an

[22] Cf., e.g., Union Carbide Corp. (Texas City), 47 FR 21553 (May 19, 1982); B.F. Goodrich (Avon Lake), 49 FR 4798 (February 8, 1984).

application to make such reductions state-enforceable through or concurrent with use of a formal or informal banking mechanism. However, in order to avoid needless disruption and inequitable retroactivity, this definition does not apply to reductions which sources have previously applied to bank. See Section I.A.1.b.(1) of the Technical Issues Document.

b. *Additional "Progress" Requirement: State Assurances.* In concluding that properly-structured bubbles as defined above can produce valuable interim progress in primary nonattainment areas which require but lack approved demonstrations, EPA also considered whether other showings might be necessary to assure that individual bubbles do produce such progress. The Agency has concluded that few such showings, whether bubble-related or otherwise, are practicable or workable. It did, however, conclude that certain representations meant to assure each bubble's consistency with SIP planning goals, by requiring states to take a meaningful look at such consistency in each bubble approval, would help assure that progress is achieved.

Under circumstances detailed in the final Policy and Technical Issues Document, today's notice therefore requires the appropriate state authority to provide the following written assurances to accompany each bubble which is approved (either directly by EPA as a case-by-case SIP revision, or by states under an EPA-approved generic rule) in these areas:

1. The resulting emission limits are consistent with EPA requirements for ambient air quality progress, as specified in today's notice.

2. The bubble emission limits will be included in any new SIP and associated control strategy demonstration.

3. The bubble will not constrain the state or local agency's ability to obtain any traditional emission reductions needed to expeditiously attain and maintain ambient air quality standards.

4. The state or local agency is making reasonable efforts to develop a complete approval SIP and intends to adhere to the schedule for such development (including dates for completion of emissions inventory and subsequent increments of progress) stated in the letter accompanying the bubble approval or in previous such letters.

5. The baseline used to calculate the bubble emission limits is consistent with the baseline requirements in the Emissions Trading Policy Statement and Technical Issues Document.

Such assurances need not be verified by, e.g., detailed quantifications, comparison with year-by-year progress projections, or showings that all reductions needed for area-wide progress or attainment have been identified and targeted for regulation. They are, however, expected to be based upon meaningful review by the state and to be consistent with the documentation supporting the bubble. EPA will not second-guess such state representations, provided they are a substantial test applied by the state to each bubble and the state has explained how the proposed bubble is consistent with the area's projected attainment strategy. Nor will EPA examine, or expect states to examine in making such representations, any specific source's subjective motivation in making claimed reductions. The combined effect of these requirements will be (a) to deny bubble credit for reductions which occurred before application for credit, in recognition of the fact that reductions produced before any application to bank or trade are unlikely to have been elicited in any way whatsoever by the opportunity to trade; (b) to help assure that only actual reductions in current emissions are relied upon to satisfy pending control requirements in these areas; (c) to more systematically encourage efforts by sources to produce and permanently maintain these additional reductions, by granting them predictable bubble credit where specified baseline and other tests have been applied; and (d) to assure that these bubbles will not interfere with these areas' attainment efforts. Any other approach would enmesh EPA and state agencies in lengthy, resource-intensive, and uncertain efforts to determine subjective company motives for making particular claimed reductions—efforts which appear unlikely to provide greater environmental protection than the criteria articulated here. Cf. e.g., 48 FR at 39584 and n. 15, 39585–86.

2. Basic Rationale

EPA believes that Congress would clearly have intended the Agency to approve bubbles that, despite the lack of a complete attainment demonstration for the affected areas, nevertheless produce progress toward attainment in those areas. Section 172(b) of the Clean Air Act does require states to formulate complete control strategies to attain the standards in these areas as expeditiously as practicable and, in the case of primary standards, by certain fixed dates. It also requires these areas to demonstrate reasonable further progress toward attainment in the interim. However, SIPs and attainment demonstrations are composed of dozens, if not hundreds, of regulations and commitments adopted at the state or local level, following proceedings that often are time-consuming and overlap in sequence. If EPA were to wait until every such provision were adopted and submitted by the state before acting on any of them, substantial environmental benefits that would otherwise accrue from having each available requirement promptly incorporated in a binding manner into the SIP and made federally enforceable would be forgone. Such an "all or nothing" approach would produce less expeditious progress toward attainment than a combination of (a) EPA approvals of state provisions submitted sequentially and (b) appropriate use of sanctions authorized by the statute to effect the adoption and submittal of remaining necessary provisions. Given the strong emphases in the statute as enacted, it is doubtful that Congress would have intended the former, less progressive approach.[33]

For these reasons, EPA has decided to approve in these areas bubbles which individually produce progress, both beyond preexisting plan requirements and in the air itself, and which do not interfere with these areas' efforts to construct complete strategies that provide for attainment as expeditiously as practicable.

Today's notice accordingly disallows use in bubbles of reductions made prior to any application to bank or trade, but allows appropriate use of reductions made after such application. Where a source voluntarily proposes to make creditable reductions as part of and following a banking or trading application, the stringent lowest-of-actual-SIP-allowable-or-RACT-allowable baselines must be applied if a bubble is involved, and that bubble must meet appropriate ambient tests, using emission levels that produce overall equivalence to the emissions baseline. The "net 20%" discount in remaining emissions then applies to all sources in the bubble, and provides an additional safety margin to assure ambient progress from bubbles in these areas.[34] Finally, the state assurances

[33] See, e.g., *Chevron USA* v. *NRDC*, supra n. 4.

[34] This "net 20%" requirement is also supported by evidence indicating that for most extension area SIPs addressing ozone pollution—the most widespread remaining nonattainment health problem—a net 85% reduction (81% RACT + 20% of remaining VOC emissions) appears sufficient to produce ambient attainment, if those areas could secure such reductions from all controllable stationary sources of VOC emissions which remain after implementation of stringent controls area by area. See, e.g., "On Attainment Status of 33 Areas Under Different Degrees of Stationary Source Con-

will indicate whether approval of the bubble is likely to remove rather than enhance any important opportunities to construct complete attainment strategies.

EPA believes that bubbles meeting the special progress requirements described above will produce both progress beyond preexisting plan requirements and progress in the air. First, with respect to *preexisting plan requirements*, each bubble would achieve a net tightening of at least 20 percent. Trades that result in a permanent 20 percent reduction beyond actual emission levels (which are *already* below what the plan allows), would produce even greater progress beyond preexisting requirements. Moreover, state assurances that must accompany each bubble will help ensure that approval does not represent a step backward in the process of developing a plan providing for timely attainment.

Each such bubble would also produce net progress in the *air*, since each increment of required control forgone as a result of the trade would be more than compensated by a greater reduction which was not required, and which may reasonably be presumed to have been elicited by the trading opportunity. Neither EPA nor anyone else can prove that all reductions which occur after filing of an application for credit were elicited in whole or in part by the trading opportunity. Decisions in the real world, whether corporate or otherwise, always arise from multiple motives which are not easily disentangled, any strand of which may have "tipped" the balance toward or precipitated a particular action. However, the Agency has concluded that this presumption is reasonable. First, it is plausible that such reductions were elicited at least in part by that opportunity, especially where, as here, sources must affirmatively decide to surrender something of value and constrain purely private decisionmaking (e.g., enforceably commit to change production processes) in order to create a cognizable reduction.[36] Second, this presumption is the only practical alternative to the administratively difficult and uncertain approach of attempting to determine the intent and motives of source owners making these reductions.

EPA has also concluded that bubbles meeting these new requirements will not interfere with the statutory mandate that states attain standards as expeditiously as practicable. Each such bubble would produce progress in the air that, for the reasons just described, would likely not have been achieved absent the trading opportunity.[38]

3. *Additional Considerations Regarding the Benefits of Bubbles*

Individual bubbles *approved* under today's special progress requirements for primary nonattainment areas which lack demonstrations will produce progress in the SIP and in the air. Moreover, the mere *existence* of the opportunity to trade has independent progressive effects.

As some commenters suggested, lack of such demonstrations usually results from one of two general causes: Either the state does not know where or how to obtain sufficient further emission reductions, or it has identified sources of such reductions but is unable to implement new regulatory requirements because of their cost. Moreover, regulated firms may often be reluctant to disclose information that may be used to require further retrofits against them. Even where such information is obtained, it may not be sufficiently precise to allow EPA and the state to resolve remaining ambient problems. While a vigorous regulatory response remains critical in these areas, that response is likely to be hampered by the very information barriers that discouraged a demonstration of attainment in the first place. See, e.g., 48 FR 39542 (August 31, 1983).

Bubbles can help break such deadlocks over the feasibility of obtaining further reductions by providing an incentive for plant managers to find economical ways to go beyond current regulatory requirements. The opportunity to trade may also encourage sources to come forward in order to establish the quantifiable and enforceable emission limits on which credit must be based.

Bubbles may achieve substantial reductions even without special "progress" requirements, since sources not otherwise subject to or not yet meeting RACT requirements with future effective dates in such nonattainment areas must first reduce emissions to RACT-allowable levels before they can begin to accrue credit.[36] Where modeled showings of ambient equivalence are required, bubbles may also help identify and correct remaining nonattainment problems. In addition, bubbles may help produce (a) faster compliance with RACT limits already defined in partially-approved SIPs, (b) faster RACT definitions for sources not subject to currently approved portions of SIPs, (c) incentives for plant managers to disclose uncontrolled or uninventoried sources, and (d) incentives for such managers to control emissions earlier than required. Perhaps most important, because of their potential to elicit better information on sources, emissions, control performance and ambient effects, bubbles may enhance states' ability to secure future reductions, if and when such reductions are required. For example, EPA experience has documented cases in which bubble or similar trading applications have improved federal and state air quality management capabilities by improving data on emissions, ambient impacts, and unregulated or uninventoried sources.[37]

Control" (Feb. 1984); Letter, Richard A. Lorell, The Conservation Foundation, to Hon. Lee M. Thomas, March 12, 1986 ("The trial calculations... indicates the staff's attentiveness to the limited control possibilities available, and appears to support their conclusion about the contribution RACT plus 20 percent can make to attainment.").

[36] The Agency has determined that these conclusions also apply where the post-application reduction on which the applicant relies for credit happens to be a shutdown or production curtailment. Because multiple motives similarly affect, and can determinatively "tip," decisions to close a facility or restrict its productive capacity, shutdowns that occur after the source owner applies for credit, no less than other types of post-application reductions, may be presumed reasonably elicited by the opportunity to trade. This is particularly true because the source operator, whatever its antecedent motives, must make a deliberate decision to forgo an item of substantial value—either by surrendering its operating permit or by accepting binding production limits—in order to create credit. Since it would be administratively difficult, if not impossible, to prove or disprove that opportunity to trade was the driving force or a subjective motive behind the shutdown, such a presumption is amply justified.

[37] See, e.g., 47 FR 15077, 15082; 46 FR 39580 and n. 2, 39582 and n. 7.

RACT levels are generally at least 80% or more below uncontrolled emission levels, depending on the pollutant. Where pre-trade actual emissions are higher than RACT baseline levels this requirement directly accelerates air quality progress, since no credit can be secured for the difference.

[38] Trade applications submitted over the last several years have, among other things, helped establish and verify emissions factors for nontraditional sources, as well as give or improve emissions profiles of such sources. See e.g. application of Shenango Iron and Steel Co. approved 46 FR 55888 (December 26, 1985). It also provided current emissions data not otherwise available to EPA through the Agency's National Emissions Data System (50 FR 25093, June 17, 1985) and have disclosed the existence of sources (in at least one case an entire plant) that had been wholly missed in development of the state's emissions inventory. Other applications have identified and reduced previously unsuspected threats to PSD increments, helped correct substantial discrepancies between uncontrolled and actual emissions, or between SIP emission limits and attainment demonstrations, and helped improve enforcement procedures in certain state programs. In addition to such case-specific examples, opportunity to trade appears to reduce traditional reasons for sources to underestimate their emissions, resulting in better inventory and planning data. For example, Massachusetts requires firms to provide data on their two years of highest emissions since the desired year of the SIP, in order to ensure a fairly conservative cap under the state's VOC bubble rule. This requirement has produced baseline data for previously unquantified emission years for some sources.

Through all these mechanisms, bubbles can achieve substantial emission reductions and air quality planning benefits, even without special "progress" requirements.

Nowithstanding these independent progressive effects, EPA believes that it may approve bubbles in these nonattainment areas only if they meet the specific progress requirements described above and do not interfere with the affected areas' efforts to develop and implement complete attainment strategies. Such bubbles can help adjust existing inadequate regulations on a source-specific basis, help make progress toward a full approved demonstration, and help improve air quality, without "freezing" inadequate SIP requirements that are currently in place.

Accordingly, EPA has decided to approve "progress" bubbles which are consistent with the attainment needs of these areas, which produce a net air quality benefit, and which may therefore secure faster interim progress toward attainment and more rapid development of complete attainment plans.

III. Additional Policy Changes and Clarifications

Today's notice makes numerous additional changes in response to comments on and following the 1982 policy. The most important of these changes or clarifications are discussed below.

A. *Generic Bubble Rules*

Today's notice recognizes the special position of EPA-approved state generic bubble rules. Such rules may provide clearer approval criteria and may result in more rapid bubble approvals with reduced expenditure of EPA and state resources, by eliminating the need for case-by-case Federal rulemaking on each bubble as an individual SIP revision.

Today's policy affirms that states may continue to use generic rules to approve bubbles within the scope of such rules in all areas of the country, including primary nonattainment areas needing but lacking approved demonstrations of attainment. It also establishes specific procedures to ensure opportunity for public comment on individual generic actions and for regular EPA oversight of state administration of all such rules. Finally, it spells out additional "progress" requirements that new generic rules must satisfy to be approvable for primary nonattainment areas needing but lacking demonstrations of attainment.

State generic bubble rules approved by EPA as SIP revisions have independent force of law and further Congress' intent that "the prevention and control of air pollution at its source [remains] the primary responsibility of States and local governments." Clean Air Act, § 101(a)(3). EPA has approved or proposed to approve 10 such rules for 9 different states, and at least 12 others are being developed. Few approved rules currently apply to primary nonattainment areas which require but lack approved demonstrations. However, today's notice requires that all generic rules meet certain additional procedural requirements in order to assure effective EPA oversight of their administration and to identify any deficiencies in individual approvals or state implementation procedures before substantial numbers of state-approved bubbles may be put at risk. To the extent these requirements require modification of existing generic rules, they may apply to rules affecting any area, not just primary nonattainment areas which need but lack demonstrations.

Today's policy is meant to assure these rules' smooth continued operation, both now and through any future transition periods, without undermining the considerable investment states have already made in generic approaches. At the same time, the policy is designed to assure that actions under generic rules will meet the policy's substantive and procedural objectives.

Basically, *bubbles approved by states under existing EPA-approved generic rules before the effective date of this policy* will not be affected or revisited due to today's changes. Because EPA-approved generic rules possess independent validity and may only be changed upon completion of specific procedures for altering such SIP provisions (see, e.g., Clean Air Act sections 110(a)(2)(H), 110(i)), states may also *continue to approve bubbles in accord with such rules*, unless and until those rules are finally changed in response to an EPA notice requesting and establishing a specific timetable for their modification. However, in order to provide maximum assurance of SIP integrity and minimize any need for future SIP corrections, EPA expects states to assure so far as feasible that generic bubbles they approve are consistent with applicable terms of today's policy as well as their generic rules. *New or pending generic rules* must all meet the terms of today's notice.

All existing generic rules which require modification to conform to this policy must, as requested by EPA, be promptly revised. EPA will review such rules to determine their consistency with today's requirements, and will publish Federal Register notices identifying generic rules requiring modification. These notices will identify specific deficiencies and means for correcting them, and set forth a schedule for both submittal and EPA review of revised rules. Where states fail to resolve identified deficiencies in such rules within the prescribed period, EPA may either rescind its previous approval of the rule, or issue a notice of SIP deficiency under section 110(a)(2)(H) of the Act.

1. Substantive "Progress" Requirements

Generic bubble rules applicable to *primary nonattainment areas which need but lack approved demonstrations* must provide that all generic bubbles in these areas:

(a) Use lowest-of-actual-SIP-allowable-or-RACT-allowable emissions baselines, as described above, for all sources involved in the trade;

(b) Grant credit only for those reductions occurring after an application to bank or trade credit (whichever is earlier) has been made;

(c) Incorporate replicable procedures which assure that all trades preapproved by EPA as meeting the rule will also satisfy applicable ambient equivalence tests (see Technical Issue Document, Section II.B.2.); and

(d) Produce an overall emission reduction at least equal to a net 20% reduction in emissions remaining after application of the above baselines, or at least equal (in percentage terms) to the overall emission reduction (in percentage terms) needed to attain in the area (i.e., at least equal to the source-by-source emission reductions that would be required for a full demonstration of attainment, taking into account "uncontrollable" stationary [e.g., area] sources and expected emission reductions from mobile sources), whichever is larger.[24] This last

[24] For example, assume air quality analysis indicates the area must decrease its base-year emissions by 45% to attain the relevant NAAQS. Further assume:

	TPY
(a) For the base year:	
Uncontrollable stationary source emissions (e.g., residential combustion sources)	[illegible]
Controllable stationary source emissions	[illegible]
Mobile source emissions	[illegible]
Total	[illegible]
Target emissions for attainment (10,000 x (1.0-0.45))	5,500
(b) For the projected attainment year (before additional controls):	
Uncontrollable stationary source emissions (2,500 x 1.1)	[illegible]
Controllable stationary source emissions (3,500 x 1.2)	[illegible]
Mobile source emissions	[illegible]
Total	[illegible]

determination must be submitted with the rule, and must use the same type and quality of analysis required for an EPA-approvable SIP. In no event may the overall emission reduction required of generic bubbles in such areas be less than 20% of the emissions remaining after application of the baselines specified above; and

(e) provide assurances, in conjunction with the state's submittal of the generic rule to EPA, that the state (i) is making reasonable efforts to develop a complete approvable SIP that will achieve the percent emission reduction from controllable sources described in the previous paragraph and (ii) intends to adhere to the schedule for development of such a SIP (including dates for completion of emissions inventory and subsequent increments of progress), as stated in the letter accompanying the submittal or in previous letters. EPA believes that the numerical determination and progress requirement discussed in the previous paragraph is the functional equivalent of the additional assurances described earlier in this notice (see Section II.B.1.b above) for bubbles needing case-by-case EPA approval, since bubbles meeting this requirement will produce attainment-level reductions. For that reason, EPA does not believe that it must require the state to make those additional assurances when it submits the generic rule. However, to assure that generic approvals continue to complement and do not interfere with attainment planning, EPA will require the state to include all of those assurances in or with its notices of proposed and final approval of each bubble issued under the rule in such a nonattainment area.

Generic rules meeting these requirements will assure that each state-approved bubble produces reductions at least equal to those which would be required under an approved demonstration of attainment. Their availability can also encourage states and sources to take significant further steps towards such demonstrations. Since reductions sufficient for timely attainment are all EPA can require for approval of State Implementation Plans under section 110 and Part D of the Clean Air Act, *Train* v. *NRDC*, *supra*, further Agency scrutiny of individual bubble reductions is not required.

2. Procedural Requirements

Today's notice includes tightened requirements designed to assure, with minimal burdens on states, that EPA's responsibility to monitor the implementation of all generic rules incorporated in SIPs (see section 110(a)(2)(A)(H)) is more efficiently and effectively carried out. EPA will fulfill this responsibility by (a) examining and commenting on, together with any other public commenter under applicable state law, the information provided for individual trades subject to proposed action under generic rules, (b) conducting reviews of individual trades approved under such rules; and (c) periodically auditing implementation of the rule itself as part of its National Air Audit System investigations of state air pollution control programs, including indepth file audits of actions under such generic rules. These activities will cover state actions of disapproval as well as approval, and will examine whether rules are being interpreted or applied within the scope of their approval by EPA.

To be considered valid by EPA, a trade approved under a generic rule must (1) be one of a class of trades authorized by the rule, (2) be approved by the state after the rule has been approved by EPA, and (3) meet all the provisions of the EPA-approved rule. State approvals which do not meet these requirements are not considered part of the SIP and do not replace prior valid SIP limits, which remain enforceable and may make such trades the subject of remedial action after due notice by EPA to the state and source.

In addition to requiring that generic rules or other state provisions assure meaningful notice to EPA by the first day of the public comment period on *proposed* generic actions, and immediately upon *final* generic action today's policy also requires that state generic rules or other state provisions provide *the general public* adequate notice and opportunity to comment, including opportunity for judicial review sufficient to make comment effective. Existing state generic rules, statutes or regulations will generally satisfy this requirement. However, some jurisdictions, for example, deny judicial review to commenters who do not possess a direct financial stake in individual permits. Such jurisdictions will have to modify their generic rule, other provisions, to meet this requirement.

B. Bubbles Involving Hazardous or Toxic Air Pollutants

EPA reaffirms and extends its 1982 determination that bubbles in any area must not increase emissions of hazardous or toxic air pollutants. Bubbles cannot be used to meet or avoid National Emission Standards for Hazardous Air Pollutants (NESHAPs) *that have been finally promulgated* under Section 112 of the Act. Where NESHAPs *have been proposed but not promulgated* for emitting sources which are the subject of a bubble application the proposed NESHAP will generally serve as the baseline for determining creditable bubble reductions, and the trade must produce reductions at least as great as those which the proposed NESHAP would produce, if promulgated. Moreover, no source emitting a pollutant subject to such a proposed NESHAP may exceed emissions allowed under the proposed NESHAP as a result of the trade. Where a bubble involves a pollutant which is *listed* under Section 112, but no NESHAP has yet been proposed for the relevant source category, or a pollutant for which EPA has issued a Notice-of-Intent-to-List, there must be no net increase in actual emissions of the noticed or listed pollutant.[39] In general

---

Therefore the reductions needed from controllable stationary sources are 9,450 − 5,500 = 3,950 tons/yr.

And the percent emission reduction required from controllable stationary sources to attain is

$$\frac{(3950)}{(4200)} \times 100 = 94\%$$

Thus the net overall reduction required from each generic bubble would be 94% (i.e., the reductions produced by applicable baselines (e.g., application of a RACT emission rate) plus whatever percent reduction in emissions remaining after this RACT limit is sufficient to yield the 94% total).

States that wish to avoid case-by-case SIP revisions for sources for which RACT has not yet been defined in an approved SIP provision may incorporate "presumptive RACT" values (e.g., 80% reduction for VOC) in their generic rules. Sources would then have the option of accepting these RACT values for generic bubble purposes, or negotiating different RACT values through the case-by-case SIP revision process. However, where a source involved in a trade is one for which EPA has issued a CTG, but the state has not yet adopted the CTG-specified emission rate as RACT and no RACT has yet been specified by the state for that source, the presumptive or negotiated RACT values for the trade must be at least as restrictive as the CTG-specified emission rate for that source.

[39] In some limited circumstances additional pollutants may be treated as listed pollutants. See Technical Issues Document, Section I.B.1.c.

all bubbles involving emissions of pollutants described above must use lower-of-actual-or-NESHAPs-allowable emissions baselines, and must take place within a single plant or contiguous plants.[30]

Commenters who addressed this issue divided into two general groups. One group asserted that hazardous/toxic restrictions should extend beyond pollutants currently regulated, proposed to be regulated, or listed under Section 112. These comments generally maintained that restrictions should also apply to all pollutants the Agency is "actively considering" for listing. A second group asserted that neither volatile organic compound (VOC) nor particulate emissions should be traded unless there is clear evidence that specific substances present in such VOC or particulate emissions are "relatively innocuous."

EPA has determined that for reasons of policy and administrative practicality these suggestions, while laudable in intent, should not be adopted. Bubbles are alternative means of compliance which should generally be treated no differently than other compliance strategies, provided basic SIP requirments of consistency with ambient needs, PSD increments, and interim progress are met. EPA's statutory authority to further restrict trades on the basis of hazardous substances which may be present in a particular criteria pollutant stream (e.g., VOCs) and which may be subject to a listing, notice-of-intent-to-list or proposed NESHAP, but are not as yet regulated under § 112, is limited. Generalized attempts to exercise such authority based on the presence of substances on which the Agency has taken no formal action whatever would be still more tenuous. Moreover, the inherent ambiguity of such terms as "actively considering" or "relatively innocuous" militates against such tests. States remain free to adopt further restrictions consistent with local laws and needs. However, with respect to national requirements EPA has concluded that clear decision points based on actions pursuant to the deliberative process and record evidence underlying section 112 determinations are to be preferred.

Interested parties should be aware, however, that under today's policy the Administrator reserves discretion to consider on a case-by-case basis whether bubble proposals involve pollutants which, while not regulated, listed or otherwise noticed under section 112, are regulated as toxic under other federal health-based statutes, and to require further analysis before approving such proposals.

One commenter expressed concern over the 1982 policy's use of the term "reasonably close" to indicate the distance which may be covered by bubbles involving pollutants listed or proposed to be regulated under section 112. EPA agrees this term is ambiguous, and with the exception of bubbles which affirmatively decrease such pollutants below the lower-of-actual-or-NESHAPs-allowable baseline, has substituted the more protective and certain requirement that such trades occur within a single plant or contiguous plants. In order to assure that such trades do not produce adverse health or environmental effects, today's notice also requires that they rely only on reductions below current actual or section 112 allowable emissions as of the trading application, whichever is lower, in pollutant streams containing a substance which has been noticed, listed, or proposed to be regulated under section 112.

Several of these provisions—notably the proposed NESHAPs baseline and source-specific proposed-NESHAPs emissions cap, the inclusion of pollutants subject to Notices-of-Intent-to-List, and the general limitation to contiguous plants and lower-of-actuals-or-§ 112-allowables baselines—represent substantial tightenings over the 1982 policy.

C. Banking Emission Reduction Credits (ERCs)

EPA-approvable emission reduction banks may allow sources to store ERCs for their own future use or use by others. Today's notice reiterates that states are by no means required to adopt banking procedures, but notes that banks may help states and communities realize important planning and environmental benefits.[31] Banks may encourage firms to create inexpensive extra reductions at earlier, optimal times (e.g., when replacing outworn control equipment or deciding how to meet new requirements) and disclose such information to state agencies. They may help create a central pool of identifiable, readily-available reductions which can ease plant modernizations or expansions, new source siting, or existing-source compliance. Properly-structured banks may reduce incentives for sources to delay, conceal or hoard actual or potential reductions until an immediate use arises. Banks may also produce other, interim environmental benefits, since banked ERCs remain out of the air (although they must be treated for SIP planning purposes as "in the air") until used. In addition, banks can help state agencies manage their permit workload more efficiently, because portions of new source or existing-source compliance transactions may be pre-permitted or reviewed in advance. Banks may also help states systematically assure that all unused surplus reductions are treated as "in the air" for SIP planning purposes, avoiding potential inconsistencies which might cause those reductions to be lost.

Comments indicated some confusion over whether, in addition to meeting other ERC requirements, reductions must be made federally enforceable to be formally credited for banking. The answer is no. However, in order to qualify as emission reduction credits and be deposited in EPA-approvable banks, emission reductions must be made enforceable by the state. Reductions must be made enforceable by the state by their time of deposit in order, e.g., to better assure the integrity of the state's air quality planning process by preventing sources from banking reductions of emissions which their permits do not preclude them from continuing to emit. This requirement will also prevent undue reliance by parties or potential parties on emission reductions which have not actually occurred.[32] However, because these

[30] The one exception involves bubbles in which surplus reductions in the emissions of pollutants subject to regulation, proposed regulation, listing, or Notice-of-Intent-to-List as hazardous emissions compensate for increases in non-hazardous emissions. (E.g., where a source decreases benzene emissions below the baseline specified above, in exchange for corresponding increases elsewhere in a non-hazardous VOC.) As long as such a trade would not result in an increase in either actual or allowable emissions of a pollutant subject to the special restrictions discussed above at any source, it would not differ in nature of requirements from a trade involving only non-hazardous emissions.

[31] See e.g., 47 FR 15083–84 (April 7, 1982).

[32] In primary nonattainment areas which have but lack approved demonstrations, emission reductions made prior to application to bank or trade (whichever is earlier) will not be credited for use as bubbles (see Section LA.1.a.(1) of today's Technical Issues Document). Following publication of today's notice, the "date of application to bank" will be the date the source submits an application to the state to make a reduction state-enforceable through or concurrent with use of a formal bank or informal banking mechanism (see section LA.1.a.(1) of today's Technical Issues Document).

In other areas, although emission reductions cannot qualify as ERCs or be deposited in EPA-approvable banks until they are made enforceable by the state, emission reductions banked through other formal or informal banking mechanisms which do not make reductions state-enforceable by the time of deposit will still be eligible for use in future trades, so long as those reductions are made federally enforceable at time of use and all applicable requirements of the regulatory program under which they will be used are met.

Cont

actions merely create extra reductions in actual or allowable emissions which cannot by themselves produce any adverse effects on air quality, they need not be made *federally* enforceable until used.[33] Where states wish to make banked emission reductions *federally* enforceable at the time they are banked, several mechanisms may be available for doing so without case-by-case SIP revisions. States with EPA-approved PSD, NSR, visibility and preconstruction review programs can issue permits to credit reductions from emission units currently subject to these preconstruction permits.[34] States with EPA-approved generic rules may also be able to use those rules' procedures to make reductions at existing sources federally enforceable. Since only reductions in applicable emission limits are involved at the banking stage, modeling should not be required. Moreover, these reductions should automatically meet the requirement that changes in emission limits under generic rules not jeopardize ambient standards or PSD increments.

Since some trades have special requirements, banks do not guarantee the validity of particular banked ERCs for all potential uses or for all time. For example, because only actual reductions occurring at the same major stationary source are eligible for netting, banked reductions created at other stationary sources cannot be used for netting transactions. However, banked credits resulting from reductions at other stationary sources may be used as offsets or in bubbles, so long as this notice's other requirements for appropriate use of credits are observed and applicable offset requirements are satisfied.

Because of differing regulatory requirements, the amount of credit actually derived from particular emission reductions may also differ from one regulatory program to another. For example, in primary nonattainment areas needing but lacking approved demonstrations, the amount of credit available from a given reduction for bubble purposes may be less than that available from the same reduction for netting or offset purposes, since special progress requirements apply to bubbles in these areas.

Because the *use* of credits will change (rather than merely reduce) emission levels if approved, such proposals should be carefully evaluated to assure they meet all of today's criteria for appropriate use. For similar reasons *proposals to use banked credits* will usually require additional approval procedures (e.g., additional modeling for certain TSP or SO_2 trades), whether such proposals are evaluated as case-by-case SIP revisions, under EPA-approved generic rules, or under EPA-approved new source review programs.

One commenter asked how banked ERCs would be treated if a nonattainment area is being redesignated to attainment. Redesignation will have no effect on the banked ERCs, so long as state planning considered those ERCs to be *in the air* (i.e., in the inventory) at the site of their creation. Because local recessions or shifts in industrial patterns can temporarily affect air quality without regard to the adequacy of state emission-control efforts, EPA guidance requires that redesignation not be based solely on monitored air quality. In addition to considering factors such as the state of the particular economy and its effect on emissions, EPA may consider the number, type, and state inventory treatment of banked credits. Such procedures will help assure that reliably banked reductions are not reduced or otherwise adversely affected by shifts in an area's designated attainment status.

Some commenters asserted it is overly cautious to require that *all* banked emissions be considered as "in the air." One commenter asked that state planning be required to include as "in the air" only a *portion* of banked emissions analogous to a "reserve requirement." This comment drew parallels with financial banking to assume that, given withdrawals and deposits, a certain "float" quantity of ERCs would always remain in the bank and out of the air. EPA recognizes that reductions placed in banks may tend to keep the air cleaner through a relatively constant level of deposits. However, EPA cannot allow states to consider less than their full amount of banked deposits as "in the air." To do so could jeopardize air quality planning and attainment.[35]

D. OBERS Projections and Double-Counting

In its August 1983 notice EPA asked for further comment on whether some SIPs' translation of general economic growth projections provided by OBERS (Department of Commerce) directly into projected emissions growth, left "no straightforward way to disaggregate the projections into shutdowns and new plant openings." Whether such SIP demonstrations were fully or only partly approved, the notice continued, such use of OBERS might make it impossible to distinguish which shutdowns were already relied on in the demonstration. Therefore, it might be "difficult or impossible for states whose SIPs rest on OBERS projections to grant credit from shutdowns for use in existing source bubble trades, consistent with the Clean Air Act." 48 FR 39581.

Most industry and several state commenters asserted that where OBERS data were used to project needed SIP reductions, use of shutdown credits in bubbles was not a problem, since OBERS figures substantially overestimate the total amount of emission reduction needed to attain. For example, one industry commenter noted that "emissions growth will not be directly proportional to economic growth because of the installation of new environmentally efficient technologies. Therefore, SIPs which used "OBERS" projections already have

---

Since states may have to revise their regulations or permit procedures in order to implement this new *state-enforceability requirement*, full implementation will not be expected until one year after publication of today's notice. However, all credits not made enforceable when banked during this interim period, together with all credits deposited *prior to today's notice*, should be made state-enforceable within eighteen months from the date of this policy.

[33] Cf. 47 FR 15078, 15081 at col. 2.

[34] Some jurisdictions may also use general state preconstruction review programs that have received EPA approval to credit reductions at existing sources if such reductions are covered under the program, since requirements under these programs are federally enforceable.

[35] In order not to defeat banking's purpose of encouraging the earliest possible disclosure and production of potential extra emission reductions, use of banked credits for bubble purposes *in primary nonattainment areas which lack approved demonstrations* will continue to be allowed, provided these credits meet all baseline and other applicable requirements of today's notice for these areas. This generally includes the lowest-of-actual-SIP-allowable-or-RACT-allowable emissions baseline, applied as of the date of written application to the state to bank such reductions through a formal bank or informal banking mechanism for use in future trades. It also includes that 20% net reduction requirement and state assurances specified above, at the time such credits are approved for use in bubbles. Banked credits resulting from *plant shutdown or production curtailments* may be used for bubbles in these areas on the same terms as use of other banked credits, provided their use is subject to stringent quantitative review to assure legal, technical and programmatic consistency with SIP planning goals (e.g., avoidance of "shifting demand"). See today's Policy at n. 24 and Section I.A.1.d(3) of the Technical Issues Document. (Banked credits resulting from certain shutdowns or production curtailments may however, be subject to special restrictions for offset purposes. See today's Technical Issues Document at n. 14).

The special restrictions discussed above do not apply under today's notice to use of banked credit for bubble purposes in other areas.

an inherent growth potential built into them, and allowing ERCs for shutdowns in these areas will not jeopardize a state's ability to demonstrate attainment." A local agency agreed that "demonstrations . . . based on such emission projections would overestimate attainment because some growth will occur from [wholly] new sources, new sources replacing existing sources, or modified existing sources, [all of] which would be subject to . . . New Source Review rules, rather than the less stringent [SIP] requirements assumed in the emission projections."

Several state commenters also stressed that while use of OBERS projections is not widespread, the underlying question is whether the area's SIP process incorporates conditions sufficient to prevent double-counting of shutdown credits. One local agency recommended that shutdown credits be prohibited where the source involved is within an industrial category projected to go through an economic downturn, asserting that in such cases the SIP implicitly relies on the expected shutdowns. An environmental group went a step further, and urged that all shutdown credits for bubbles in areas using OBERS projections be completely prohibited.

EPA has concluded that the requirements of the 1982 policy are sufficient to prevent double-counting of shutdown credits, and should be retained without further special restrictions. First, use of OBERS or any other projection is relevant only where an area has an approved attainment demonstration. Today's notice generally disallows bubble credit for pre-application reductions (including reductions from shutdowns or curtailments) in primary nonattainment areas which require but lack such demonstrations. Thus today's notice largely moots any issue of double-counting for past shutdowns, in the areas for which this issue has been raised with the greatest concern. Second, use of OBERS projections in areas with approved demonstrations does not appear nearly so common as was assumed in EPA's 1983 request for further comment. Even where such projections were used in approved demonstrations, they generally overestimate the amount of emissions forecast to exist in the year of projected attainment. They therefore tend to assume substantially less overall reductions from source turnover than will actually occur.[36]

Finally, even if such projections did not overestimate emissions, under today's notice the state must show that use in bubbles of any reductions created by shutdowns is consistent with its attainment demonstration and that those reductions were not already assumed in its SIP. For example, the state must show that it did not implicitly or explicitly rely on a "turnover rate" from the difference in emissions between existing sources and better-controlled new sources for part of the reductions required in its SIP from that industrial category. Alternatively, it must show that if a "turnover rate" was assumed, the shutdown credits used in an individual trade result from reductions in excess of that turnover rate. Where a state regulated the sources in a standard industrial classification (SIC) without explicitly relying on turnovers, then bubble credit for a shutdown within that SIC category would not in general be double-counted.[37]

These requirements should fully protect states and sources against adverse environmental or SIP effects.

E. Improved Modeling and de Minimis Requirements

Bubble applicants must show that their proposed trades are at least equivalent in ambient effect to the SIP (or other) emission limits the bubble would replace. For some criteria pollutants (e.g., VOC or NO_x) this test may generally be met by showing equal reductions in emissions.[38] For other pollutants (e.g., SO_2, TSP or CO) it was traditionally met, prior to the 1982 policy, through ambient dispersion modeling.

The 1982 policy made available several alternatives to the use of full-scale dispersion modeling where such modeling was not needed to protect air quality. These alternatives could, in appropriate, carefully-limited circumstances, be used to demonstrate ambient equivalence for bubbles involving particulate matter or other pollutants whose ambient effects were not linearly related to emissions. They included *de minimis* levels and the use of other screening criteria to identify circumstances in which full-scale modeling was unnecessary, either for bubbles processed as SIP revisions or those approved under generic rules.

Today's notice both tightens some of these screening criteria and expands the circumstances in which such criteria can be used.

Today's notice also specifies certain conditions and types of case-by-case SIP-revision bubbles for which EPA Regional Offices may require additional technical support, beyond basic modeling requirements, deemed necessary to protect NAAQS, PSD increments or visibility where allowable values used to calculate baseline emissions are not clearly used or reflected in an approved demonstration, or may not reasonably be assumed consistent with the need to protect PSD increments or visibility. See Technical Issues Document, Section I.A.1.a.

1. De Minimis Levels

Under the 1982 policy, trades in which net baseline emissions did not increase and in which the sum of emission increases, looking only at the increasing sources, totaled less than 100 tons per year (TPY) after applicable control requirements, could be exempted from SIP revisions under an approved generic rule. The rationale for this approach was that EPA regulations implementing the Clean Air Act already allow some exemptions from NSR requirements for new sources which are not defined as "major"—i.e., which do not have potential emissions greater than 100 TPY. See e.g., CAA section 302(j) and 40 CFR 52.21(b)(1) and 51.18(j)(1)(v). Thus trades which merely shift lesser amounts of emissions, and which are

[36] This is so because OBERS-based SIP projections assume that units of production (and hence emissions) in particular SIC Codes will keep pace with projected trends in earnings and/or employment in those SIC codes, without regard to changing distributions between new and existing sources. See, e.g., *1980 OBERS: BEA Regional Projections, Volume 1: Methodology, Concepts and Data Base*, p. (xi), U.S. Department of Commerce (July 1981).

[37] Such credits must of course meet all other requirements of today's notice, including application of appropriate baselines and other criteria defining surplus reductions, before they may be used in a bubble trade.

States which expressly relied on OBERS projections may also show that no double-counting occurred by demonstrating that they did not implicitly rely on any turnover credits. This showing should not be difficult to make because OBERS assume that emissions will evenly increase at each plant and production line, proportionate to growth in earnings and employment potential for that SIC code. Cf. n. 36 above. This assumption neither anticipates nor relies on the fact that any shutdown will occur.

The one exception to these general principles could occur where a SIP relied on OBERS projections for an SIC category predicted to undergo a *quantified* future economic downturn, without taking explicit affirmative steps to preclude reliance on that downturn. In these circumstances the state would either have to show that a proposed shutdown credit from a source within that SIC category was not double-counted (e.g., by showing that more shutdown reductions than projected for the SIC category had already occurred), or deny credit.

[38] Interested parties should, however, be aware that ambient equivalence considerations which apply to SO_2, TSP and CO, as described below, also apply to NO_x trades involving visibility impacts from elevated plumes. See Section I.B.1.b. of today's Technical Issues document.

accompanied by compensating decreases, should not be subject to more stringent requirements. As the 1982 notice put it, "Such trades will have at most a *de minimis* impact on local air quality because only minor quantities of emissions are involved . . . the Federal resources required to evaluate these trades could best be used to evaluate actions that have a potential impact on air quality." 47 FR at 15085.[39]

One commenter asserted that this 100 TPY limitation was unnecessary, since the trades to which it applied were already required to produce no net increase in emissions. However, four state and environmental commenters urged that *de minimis* levels for such trades be the same as those triggering federally-mandated review of emissions increases in PSD areas. These comments primarily noted that EPA had already defined more relevant "cutoff" levels in its regulations for PSD, for NSR preconstruction permits in nonattainment areas, and in visibility permit regulations, and that emission shifts of 100 TPY from one source to another might still be too large to go unexamined for certain types of emissions and situations.

In order to ensure prosecution of ambient air quality, today's notice adopts more protective *de minimis* levels—derived from those for PSD; NSR permits in nonattainment areas; and the visibility permit regulations—of 100 TPY for CO, 40 TPY for SO_2, 25 TPY for particulate matter, and 0.6 TPY for lead. Because of this action, state ambient evaluation of *de minimis* trades will no longer be required for generic bubble rules to be approvable by EPA.[40] Trades involving sources of substantial size may still be implemented as *de minimis* under today's provisions, as long as the quality of ERCs traded by these sources is below the levels specified above.

2. Modeling Requirements[41]

Numerous comments were received on the 1982 policy's three-level approach to demonstrating ambient equivalence. The vast majority sought added clarification, stating, for example, that the 1982 policy did "not adequately delineate the level of modeling necessary in each instance." Today's notice tightens and clarifies the conditions under which ambient equivalence may be demonstrated with less than full-scale modeling.

a. Level I Criteria. Under the 1982 document no modeling was generally required of SO_2, TSP, or similar trades where applicable net baseline emissions did not increase, sources were located in the same immediate vicinity (generally within 250 meters of each other), and the taller stack was the one which increased its emissions. These conditions were believed sufficient to assure that local ambient concentrations of the relevant criteria pollutants would not increase as a result of the trade.

EPA has added two criteria to those specified in 1982, in order to provide additional assurance that trades approved under Level I will have no adverse ambient effect. First, there must be no complex (e.g., mountainous) terrain within 50 kilometers of the trading sources or within the trade's area of significant impact, whichever is less. (For simplified methods of determining "area of significant impact," see today's Technical Issues Document, Appendix E). Second, stacks with increasing baseline emissions must be sufficiently tall to avoid downwash.

Some industry commenters objected to the 250-meter limitation, advocating use of either trade ratios for sources beyond that distance, or an 800-meter limit extrapolated from unrelated EPA regulations.[42] EPA has retained the 250-meter limit as substantially more consistent with the modeling screen's original intent of simplifying modeling requirements for trades which could not jeopardize ambient equivalence.[43]

b. Level II Criteria. Trades of SO_2, TSP, CO, Pb and NO_x (for visibility purposes) may also be approved through limited Level II modeling of the ambient effects *solely of sources involved in the trade*, where applicable net baseline emissions do not increase and designated ambient significance levels are not exceeded.

Today's notice confirms, clarifies, and in certain cases extends various 1983 improvements made to increase certainty and better assure that such Level II trades result in ambient equivalence. In particular, "significant ambient impact" may no longer be measured solely by changes at the "receptor of maximum predicted impact" before and after the trade. Instead such changes must be measured at every affected receptor for every averaging period relevant to the particular pollutant, throughout the year. Under this approach no Level II trades will be approved without further scrutiny, involving full or limited Level III modeling, if they result in a significant net ambient effect at any modeling point for any such averaging period during a modeled year.

Today's notice also specifies Level II significance levels for all averaging periods consistent with all current national ambient air quality standards, not just the 24-hour averaging periods for SO_2 and PM or the 8-hour averaging period for CO.[44] Refined models such as MPTER and ISC must generally be used to measure changes resulting from the trade at each receptor, using the most recent full year of meteorological data.[45]

These modeling requirements assure that bubbles which pass applicable Level II tests and meet all other requirements of today's policy will result in air quality equal to or better

---

[39] The 1982 document did, however, note that such "[generic] trades are still subject to ambient tests [at the *state* level, and] . . . should accordingly be evaluated by the state under the modeling screen . . . or an equivalent approach." 47 FR 15085 at n.7.

[40] This should not be construed to imply that *new* sources and modifications need not meet all applicable requirements, including those specified under 40 CFR 51.18 or parallel EPA-approved state rules.

[41] The following discussion summarizes both interim improvements made in the 1982 modeling screen (see Technical Issues Document, Appendix C) and EPA's responses to major comments on modeling issues.

[42] See e.g., 47 FR 5864, 5866 (February 8, 1982).

[43] Trade ratios may already be used under general provisions inviting states to design other equivalent approaches which adequately address ambient concerns. See, e.g., 47 FR at 15077 and n.2, 15078. However, to be approved by EPA such ratios would generally have to be defined through area-wide advance modeling of all sources, as well as those likely to trade.

Several comments also objected to the requirement that Level I trades not increase emissions from the source with the lower effective plume height. These comments noted that under various conditions similar stacks could so vary in effective plume height that neither would consistently be "higher" or "lower." One also suggested this limitation might encourage use of tall stacks to cure local exceedances.

Today's notice retains this Level I requirement unchanged. That two sources may be virtually indistinguishable in effective stack height should not delay approval of Level I trades, since the limitation's purpose—preventing potentially significant increases in ground-level ambient concentrations due to shifts of emissions from "higher" to "lower" stacks—will still be satisfied. Moreover, since such trades cannot increase net baseline emissions, this limitation merely ensures they will not create *new* ambient violations. Because other EPA regulations address the use of excessively tall stacks to cure *existing* ambient violations, no further restriction in the Level I requirement appears required.

[44] For further discussion of these significance levels and the increased assurance of environmental equivalence they provide in conjunction with today's more sophisticated Level II modeling approach, see Fleckenstein, "Modeling Criteria: The Key to Major Reforms for Emissions Trades," APCA Paper 84-66.2 (San Francisco, California, June 25, 1984).

[45] Under some limited conditions, conservative screening models may be substituted for these refined models, and in these cases a full year of meteorological data may not be necessary. See Technical Issues Document, Section I.B.1.b.(3).

than that produced by pre-trade emission limits, and may be approved. Because refined models have now been approved by EPA and their parameters may be specified with greater certainty and confidence, these requirements also provide a firmer basis for approving state generic rules incorporating Level II.[46]

c. *Level III Criteria.* Trades which are not *de minimis* and do not satisfy Level I or Level II above must generally be evaluated by full-scale ambient dispersion modeling. Two air pollution control agencies recommended fixed trading ratios in lieu of such modeling, asserting this would reduce cost and uncertainty while continuing to meet the goals of the Clean Air Act. EPA recognizes the legitimacy of these concerns but has concluded that trades which do not satisfy Level I or II raise the kinds of air quality issues which appropriately require full-scale modeling, unless such trading ratios have been justified by similar area-wide modeling conducted in advance of the trade.

Today's notice does, however, modify Level III to provide states and sources more flexibility in this regard. Where a trade meets all other criteria of Level II, but Level II modeling has shown significant potential increases at particular receptors, modeling analyses under Level III may under appropriate circumstances be limited to a receptor area smaller than the trade's entire area of impact, so long as it includes emissions from all sources which contribute to ambient concentrations in that limited geographic area. Because of the unique nature of each situation, the appropriate limited geographic area must be determined in accord with EPA guidelines on modeling and case-by-case evaluation. This "limited Level III" approach may conserve significant resources, while allowing states and sources to focus on specific geographic areas of concern.[47]

F. Enforcement Issues

Several commenters noted that while sources should, as provided in the 1982 policy, be allowed to use bubbles to come into compliance, bubble applications might also be used to delay compliance or enforcement without compensating environmental benefits. Some of these commenters alluded to language in the 1982 notice which, while not authorizing or intended to authorize such results, could have been interpreted to allow them. Such unacceptable delay might, for example, arise where a source facing an imminent compliance deadline suddenly advances a bubble application and asserts that more time is needed to develop and evaluate that application before compliance with original SIP limits should be required.

Both bubbles and generic rules can be important means of allowing environmentally-sound compliance. Generic rules may be more expeditious than case-by-case SIP revision bubbles. They may also preserve the very opportunity to bubble when the time needed to process a case-by-case SIP revision might extend beyond the source's original SIP compliance date. At the same time, bubble applications should not become a shield against enforcement actions for sources which have failed to take necessary steps to meet required control obligations on time. Bubbles are simply alternative means of complying at less cost. They should be treated neither more nor less stringently than other, more traditional methods of compliance. Bubbles offer innovative ways to meet emission reduction obligations. They should not become devices to avoid such obligations.

Today's notice substantially clarifies and tightens the 1982 policy to better implement these principles. Among other steps, compliance extensions will no longer be granted under generic rules in any nonattainment area, and may be granted generically in attainment areas only where EPA has approved the time-extension portion of the rule as consistent with relevant Clean Air Act requirements, including expeditious attainment and maintenance of ambient standards. Cf. 47 FR at 15078 col. 2. This will generally mean that requests for time extensions as part of bubble applications must be separately reviewed as individual SIP revisions, subject to criteria EPA normally applies to such requests.

Today's notice also re-emphasizes that as a matter of law and sound policy, sources seeking bubbles remain subject to enforcement of existing (pre-trade) SIP limits until the bubble is finally approved. Sources which possess approved bubbles with future effective dates remain subject to similar enforcement of pre-trade limits until either those limits or the new ones are met, and may wish to take steps identified in the notice, including accelerated compliance with bubble limits, to minimize that possibility. See Technical Issues Document, section I.B.2.a.

Under today's notice, EPA will not specifically select such sources for enforcement action. Nor will EPA withhold or defer enforcement simply because a source is seeking alternative emission limits through a bubble. In exercising its inherent enforcement discretion, EPA will apply the same considerations to noncompliant sources which seek to comply through bubbles, as to those which do not.[48]

Emissions Trading Policy Statement

Table of Contents: Policy Statement

I. Introduction: Basic Elements of Emissions Trading
A. What is Emissions Trading?
B. The Bubble
C. Netting
D. Emission Offsets
E. Emission Reduction Banking
F. Generic Trading Rules
G. Effect of This Policy Statement
II. Requirements for Creating, Using, or Banking Emission Reduction Credits
A. Creating Emission Reduction Credits
1. Surplus
2. Enforceable
3. Permanent
4. Quantifiable

[46] Interested parties should, however, be aware that because of replicability problems related to application of any approach requiring use of case-specific ambient dispersion modeling, such Level II generic rules may be more difficult to draft and implement than rules incorporating only *de minimis* and Level I approaches for SO_2, TSP, CO or Pb. During and after issuance of the 1982 interim policy EPA staff drafted and informally circulated, at the request of state and local air agency directors, model generic rules which provided more detail to help interested states acceptably address these concerns. The Agency plans to update and recirculate those model rules as quickly as possible after publication of today's notice. EPA encourages parties wishing to develop generic rules to use these new models and work closely with relevant Regional staff, so that potential problems may be promptly identified and resolved.

[47] Today's notice also requires bubble trades in certain primary nonattainment areas meeting but lacking approved demonstrations to produce a "net air quality benefit," which shall consist at minimum of a 20% reduction in emissions remaining after application of the lower-of-actual-SIP-allowable-or-RACT-allowable emissions baselines to all sources involved in the bubble. See, e.g., Section II. B above. This requirement does not entail any modeling different than or in addition to the modeling approaches discussed above. It is merely intended to ensure that where appropriate levels of modeling indicate that prescribed baseline values are not sufficient to produce ambient equivalence, additional reductions which assure such equivalence, prior to the 20% net discount in baseline emissions, will be required.

[48] States and sources should, however, be aware that under current EPA guidance, such discretion is most likely to be exercised where a SIP-revision bubble has been formally proposed for approval at the state level and EPA staff have concluded that it appears approvable under current EPA policy. In these circumstances violation of action to enforce pre-trade limits that would soon be replaced by a valid bubble reconfiguration would likely consume limited EPA enforcement resources to little environmental end.

B. Using Emission Reduction Credits
1. Emissions Trades Must Involve the Same Criteria Pollutant
2. All Uses of ERCs Must Satisfy Applicable Ambient Tests
3. Bubbles Must Not Increase Hazardous Pollutants
4. ERCs From Existing Sources Cannot Be Used to Meet Technology-Based Requirements Applicable to New Sources
5. States May Approve Bubbles in Primary Nonattainment Areas Which Require But Lack Approved Demonstrations of Attainment
6. Sources Need Not Be Subject to Binding Compliance Schedules Based on Current SIP Requirements
7. States May Extend Certain Compliance Schedules
8. States May Approve Bubbles Involving Open Dust Sources of Particulate Emissions
9. Trades Involving Lead
10. Trades Involving ERCs From Mobile Source Measures
11. Interstate Trades
12. Bubbles Must Not Impede Enforcement
C. Banking Emission Reduction Credits
III. State Generic Trading Rules
IV. Bubbles Which Require Case-by-Case SIP Revisions
V. Conclusion

EMISSIONS TRADING POLICY STATEMENT

I. Introduction: Basic Elements of Emissions Trading

This statement details EPA policy on emissions trading. It sets out conditions EPA considers necessary for emissions trades to satisfy the Clean Air Act. It also clarifies and otherwise makes final the Interim Policy proposed on April 7, 1982 (47 FR 15076). It is accompanied by a Technical Issues Document which elaborates and provides greater detail on principles set forth below. Finally, it addresses new issues, and incorporates certain additional safeguards as a result of past trading experience, to better assure the environmental integrity of future trades.

A. What is Emissions Trading?

Emissions trading consists of bubbles, netting, emission offsets, and emission reduction banking. These steps involve creation of surplus emission reductions at certain stacks, vents or similar sources of emissions and use of these emission reductions to meet or redefine pollution control requirements applicable to other emission sources. Such emissions trades can provide more flexibility to meet environmental requirements, and may therefore be used to reduce control costs and encourage faster compliance. Moreover, by developing "generic" trading rules (see Section III below) states[1] may be able to expedite bubble approvals by eliminating the need for case-by-case SIP revisions[2] and by providing more predictable approval criteria.

B. The Bubble

EPA's bubble lets *existing* plants (or groups of plants) increase emissions at one or more emission sources in exchange for compensating extra decreases in emissions at other emission sources. Approved bubbles give plant managers the ability to implement less costly ways of meeting air quality requirements. To be approvable, each bubble must produce results which are equivalent to or better than the baseline emission levels in terms of ambient impact and enforceability. Thus, bubbles should jeopardize neither ambient standards nor applicable PSD increments and visibility requirements. Under EPA's bubble, emission reductions from existing sources can not be used to meet technology-based requirements applicable to new or modified stationary sources.

This Policy Statement replaces EPA's original bubble policy (December 11, 1979; 44 FR 71779) and Interim Emissions Trading Policy (47 FR 15076). It tightens general bubble principles as well as requirements for bubbles in primary nonattainment areas which require but lack demonstrations of attainment, and requires bubbles in these areas to produce progress towards attainment, beyond equivalence to stringent emission limits. By specifying EPA's requirements for bubbles in all areas, this Policy Statement should make the development, review and approval of environmentally-sound bubbles more rapid and predictable.

C. Netting

Netting may exempt "modifications" of existing major sources from certain preconstruction permit requirements under New Source Review (NSR), so long as there is no net emissions increase within the major source or any such increase falls below significance levels.[3] By "netting out," the modification is not considered "major" and is therefore not subject to associated preconstruction permit requirements for major modifications under 40 CFR 51.18, 51.24, 52.21, 52.24, 52.27, or 52.28. The modification must nevertheless meet applicable new source performance standards (NSPS), national emissions standards for hazardous air pollutants (NESHAPs), preconstruction applicability review requirements under 40 CFR 51.18(a)-(h) and (l), and SIP requirements.

Netting's scope is determined by the *definition of "source" for review of* major modifications. In general, PSD areas use a single, plantwide definition, allowing actual emission reductions anywhere in a contiguous plant to compensate for potential emission increases at individual emitting units within the plant. Nonattainment areas can choose either this single, plantwide definition or a dual definition, so long as the definition selected does not interfere with attainment and maintenance of NAAQS and is consistent with progress towards attainment. Under the plantwide definition, significant net actual increases at the plant as a whole will trigger new source review. Under the dual definition, significant increases at either the plant as a whole or individual emitting units will trigger new source review.

In addition to these federal definitions for major new sources and modifications, state preconstruction permits for major or minor new sources and modifications may be required under 40 CFR 51.18(a), and some states preclude netting.

D. Emission Offsets

In *nonattainment* areas, major new stationary sources and major modifications are subject to a preconstruction permit requirement that they secure sufficient surplus emission reductions to more than "offset" their emissions. This requirement is designed to allow industrial growth in nonattainment areas without interfering with attainment and maintenance of ambient air quality standards. It is currently implemented through SIP regulations adopted by states to meet the requirements of 40 CFR 51.18(j).

In *attainment* areas, some new sources and modifications might not otherwise be able to be constructed because their emissions would result in

---

[1] "States" includes any entity properly delegated authority to administer relevant parts of a State Implementation Plan (SIP) under the Clean Air Act.

[2] "Case-by-case SIP revision" means case-by-case approval by EPA as a SIP revision. This is the traditional mechanism by which bubbles and other SIP changes have been approved by EPA.

[3] See, e.g., 40 CFR 51.18(j)(1)(x), 51.24(b)(23), 52.21(b)(23). See also today's Technical Issues Document, n. 47 and accompanying text.

On November 7, 1986, EPA restructured CFR Part 51 and renumbered many of that Part's sections (51 FR 40656). Because most readers will be more familiar with prior designations, today's notice contains citations based on the organization of Part 51 as it existed before this restructuring. Interested parties may use Appendix F of today's Technical Issues Document to convert today's Part 51 citations to the corresponding new ones.

an exceedance of the applicable PSD increment or ambient air quality standard, would significantly contribute to a violation of an ambient air quality standard in a designated primary nonattainment area, or would significantly contribute to visibility impairment in a Federal Class I area. These sources may use emissions offsets to allow desired growth while protecting that increment, standard, or visibility.

E. Emission Reduction Banking

Firms may store qualified emission reduction credits (ERCs) in EPA-approvable banks for later use in bubble, offset or netting transactions. Depending on the bank's rules, banked ERCs may also be sold or transferred to other firms which seek to meet certain regulatory requirements by use of emissions trades.

EPA's revised Offset Ruling (40 CFR Part 51, Appendix S) allows states to establish banking rules as part of their SIPs. This Policy Statement and accompanying Technical Issues Document detail the necessary components of a complete state banking rule approvable under the Clean Air Act. While many areas also allow banking of emission reductions for various purposes through various formal or informal banking mechanisms, banks which do not meet today's criteria (e.g., by not making banked emission reductions enforceable by the state by the time the reductions are actually banked, or by not assuring that deposits are taken explicitly into account for SIP planning purposes) cannot qualify emission reductions as ERCs, and may offer substantially less protection in the event of future SIP corrections or changes in ambient attainment status.

F. Generic Trading Rules

Generic rules adopted as part of the SIP can authorize states to approve certain types of individual transactions without the need for case-by-case SIP revisions or associated federal review prior to approval. The first state generic bubble rule was approved by EPA April 8, 1981 (46 FR 20551). For the current scope of permissible rules, see Section III below.

G. Effect of This Policy Statement

Emissions trading is largely voluntary: no source is required to trade, and no state is required by EPA to approve a particular trade or to adopt a generic rule. Trading merely offers states and stationary sources alternative ways to meet regulatory requirements. For example, states are free to adopt generic rules or continue to implement trades as individual SIP revisions. They may adopt rules which incorporate all or any combination of the above trading approaches.[4]

This Policy Statement is accompanied by a Technical Issues Document for use by states and industry in further understanding emissions trading. The Document offers elaboration and important detail on requirements and available options under the Clean Air Act.

This notice reflects the current Clean Air Act and existing EPA regulations. A policy statement cannot legally alter such requirements. However, this notice establishes EPA policy in areas not governed by applicable regulations and sets out general principles which may help states and industry apply those regulations in individual cases. Federal or state rulemaking in response to, e.g., future litigation or changes in ambient standards, attainment status, or SIP validity, may affect states or firms that plan to engage or have engaged in emissions trading activities.

Nothing in today's notice alters EPA new source review requirements or exempts owners or operators of stationary sources from compliance with applicable preconstruction permit regulations in accord with 40 CFR 51.18, 51.24, 51.307, 52.21, 52.24, 52.27, and 52.28. Interested parties should, however, be aware that bubble trades are not subject to preconstruction review or regulations where these trades do not involve construction, reconstruction, or modification of a source.

EPA intends to apply changes made by today's policy prospectively (e.g., not to actions which have already been approved as case-by-case SIP revisions or under generic rules). However, ambient violations are discovered in an area where EPA has approved a trade, or if other violations of Clean Air Act requirements are discovered in that area, sources involved in the trade should be aware that they are potentially subject to requirements for additional emission reductions, just as are all other sources in the area.

This policy requires that substantial additional reductions (at least 20%) in emissions remaining beyond applicable baselines be produced by future bubbles in primary nonattainment areas which require but lack approved demonstrations of attainment. However, applications for bubbles in such areas which are still pending at EPA without formal action under the 1982 policy, or which were previously submitted to EPA Regions under the 1982 policy but not accepted for evaluation, will be reexamined and processed for approval if they meet the requirements of the 1982 policy and contribute to progress towards attainment. "Progress towards attainment" means some extra reduction beyond equivalence to a lowest-of-actual-SIP-allowable-or-RACT-allowable emissions baseline, with this baseline applied as of the time applicants originally sought credit. Pending bubbles in attainment areas and nonattainment areas with approved demonstrations of attainment will be processed for approval if they meet the requirements of the 1982 policy and show that ambient standards, PSD increments and visibility will not be jeopardized.

For further discussion on pending bubbles see Section I.A.1.b.(4) of the Technical Issues Document.[5]

II. Requirements for Creating, Using, or Banking Emission Reduction Credits[6]

A. Creating Emission Reduction Credits

Emission reduction credits (ERCs) are the common currency of all trading activity. ERCs may be created by reductions from either stationary, area, or mobile sources. To ensure that emissions trades do not contravene relevant requirements of the Clean Air Act, only reductions which are *surplus*, *enforceable*, *permanent*, and *quantifiable* can qualify as ERCs and be banked or used in an emissions trade.

---

[4] Some requirements underlying emissions trading are not voluntary. For example, construction of a major new source or major modification in a nonattainment area requires sufficient existing-source reductions to constitute "reasonable progress toward attainment" despite the new emissions (40 CFR 51.18(j); Part 51, Appendix S). However, where the area has an established "growth margin" of extra reductions in a SIP which is currently approved by EPA, the state may provide the offsets from that growth margin rather than require them from the source, so long as it reduces the margin accordingly. See Clean Air Act section 173(1)(A) and (B).

[5] EPA encourages states or sources which submitted bubbles that were returned without evaluation by EPA to resubmit them under these criteria, provided they can document (a) formal, timely submittal of an application to EPA in accord with normal EPA procedures and (b) that the application was returned without evaluation, rather than rejected for failure to meet the terms of the 1982 policy. Bubble applications which were accepted for evaluation but rejected for failure to meet the 1982 policy will be treated as new applications under today's notice.

[6] Because this Policy Statement and accompanying Technical Issues Document reflect general Clean Air Act principles, states, individual sources, or commenters on specific rulemaking actions are free to show that a general principle does not apply to particular circumstances or could be satisfied using approaches other than those described. States, sources and commenters have this option under current law, and nothing in this Policy Statement or the Technical Issues Document restricts their opportunity to make such showings.

1. *Surplus.* At minimum, only emission reductions not required by current regulations in the SIP, not already relied on for SIP planning purposes, and not used by the source to meet any other regulatory requirement, can be considered surplus. To determine the quantity of emission reductions that are surplus, the state must first establish an appropriate emissions baseline from which surplus reductions can be calculated. Baseline emissions for any source are the product of three factors—emission rate, capacity utilization, and hours of operation.[7]

In attainment areas, the lower of actual or allowable values must generally be used for each of these baseline factors. However, allowable values for one or more of these factors, when higher than actual values, may be used in calculating the baseline emissions, provided those values are shown to be used or reflected in an approved demonstration.[8] The burden of meeting this test by written evidence rests with the state or applicant which seeks to use an allowable value.

When allowable values for one or more baseline factors are not used or reflected in an approved demonstration, such values may still be used in calculating baseline emissions. However, in such cases applicants must perform appropriate modeling to demonstrate that allowable values which are higher than actual values will not delay or jeopardize attainment and maintenance of ambient standards.[9]

In attainment areas where the PSD baseline has been triggered, credit may be granted consistent with the PSD baseline concentration as specified in 40 CFR 51.24(b)(13) and 52.21(b)(13). This will generally require use of actual values for each of the baseline factors. *However*, states may use allowable values if they show through appropriate modeling [10] that attainment and maintenance of neither the ambient standards nor applicable PSD increments will be jeopardized, and quantify the amount of increment consumed.

In nonattainment areas with approved demonstrations of attainment, the baseline must be consistent with assumptions used to develop the area's demonstration. This generally means that actual values must be used for each baseline factor where actual values were used for such demonstrations, and that higher allowable values for these factors may be used where allowable values were used for such demonstrations.[11] The burden of showing that an allowable value was used or reflected in the approved demonstration rests with the state or applicant which seeks to use an allowable value. In the absence of written evidence to that effect, full Level III modeling would be required to make use of an allowable value in baseline calculations.[12]

In primary nonattainment areas which need but lack approved demonstrations of attainment, states must show that bubbles meet special "progress" requirements designed to produce a net air quality benefit. This must be demonstrated by (1) using the lowest-of-actual-SIP-allowable-or-RACT-allowable emissions baseline for each source involved in the trade; [13] (2) meeting the ambient equivalence tests outlined in sections II.B.2 of this Policy and I.B.1.b. of the Technical Issues Document and then (3) producing a substantial net reduction in actual emissions (i.e., a reduction of at least 20% in the emissions remaining after application of the baseline specified above). The state must also provide assurances that the bubble is consistent with ambient progress and future air quality planning goals.[14]

2. *Enforceable.* To assure that Clean Air Act requirements are met, each transaction which revises any emission limit upward must be approved by the state and be federally enforceable. Means of making emission limits federally enforceable include SIP revisions (see section IV below), EPA-approved generic bubble rules (see Section III below), and new source preconstruction permits issued by states under EPA-approved SIP regulations pursuant to provisions of 40 CFR 51.18, 51.24, or 51.307, as well as construction permits issued by EPA or delegated states under 52.21.[15] Bubbles should be incorporated in an enforceable compliance instrument which requires recordkeeping based on the averaging period over which the bubble is operating, so it may easily be determined over any single averaging period that bubble limits are being met.

3. *Permanent.* Only permanent reductions in emissions can qualify for credit. Permanence may generally be assured by requiring federally enforceable changes in source permits or applicable state regulations to reflect a reduced level of allowable emissions.

4. *Quantifiable.* Emission reductions must be quantifiable both in terms of *estimating* the amount of the reduction and *characterizing* that reduction for future use. Quantification may be based on emission factors, stack tests, monitored values, operating rates and averaging times, process or production inputs, modeling, or other reasonable measurement practices. The same method of calculating emissions should generally be used to quantify emission levels both before and after the reduction.

B. Using Emission Reduction Credits

ERCs may be used by sources in bubble, offset or netting transactions. The general principles below will assure

---

[7] For further discussion of these factors as they relate to baseline calculations, see Appendix B of the Technical Issues Document.

[8] This statement does not apply to netting, where "contemporaneous" actual emissions are always the baseline. See, e.g., 40 CFR 51.24(b)(3).

Bubbles in areas with demonstrations based only on qualitative judgments (e.g., the "example region" approach or no technical support) ordinarily may not rely, without appropriate modeling, on allowable values in calculating baseline emissions. However, bubbles in areas with demonstrations based on rollback or dispersion modeling may use allowable values that are reflected in the demonstration. In certain circumstances an allowable baseline value specified in a preconstruction permit may be deemed equivalent to one used or reflected in an approved demonstration. See Technical Issues Document, n. 7.

For further definition of "actual" and "allowable" see today's Technical Issues Document, Section I.A.1.a. and Appendix B.

[9] This demonstration would require a Level II modeling analysis, in accord with the modeling screen discussed below, using actual emissions for the pre-bubble case, unless, for bubbles processed as case-by-case SIP revisions, the Region determines that additional technical support is needed to protect applicable standards or increments. For discussion of Level II modeling, see Technical Issues Document, section I.B.1.b.(3). For further discussion of additional technical support which Regions may require in these circumstances, see Technical Issues Document, Section I.A.1.a. For a discussion of parallel modeling requirements for use of such higher allowable values in attainment areas under generic rules, see Technical Issues Document, n.11.

[10] See n.9 above.

[11] For netting, "contemporaneous" actual emissions are always the baseline. See, e.g., 40 CFR 51.24(b)(3)(vi).

[12] For further discussion of Level III modeling, see Technical Issues Document, section I.B.1.b(4).

[13] For purposes of today's notice, the "lowest-of-actual-SIP-allowable-or-RACT-allowable" emissions baseline means the product of (1) the lowest of the actual emission rate, the SIP or other federally enforceable emission limit, or a RACT emission limit, and (2) the lower of actual or allowable capacity utilization and hours of operation. For further discussion of this baseline, see Appendix B of today's Technical Issues Document.

[14] The specific assurances may be found in the Technical Issues Document at I.A.1.b.(3). EPA will not second-guess such state assurances, provided they are: (1) A substantial test applied by the state to each bubble, and (2) the state has explained how the proposed bubble is consistent with the area's projected attainment strategy. This authority has not been delegated with EPA. See Clean Air Act section 301(a)(1), 42 U.S.C. 7601(a)(1).

[15] EPA is also considering generic steps which would make state operating permits federally enforceable. Prior to use, *banked* credits need not be made federally enforceable. See Section II.C. below.

that all uses of ERCs are consistent with ambient attainment and maintenance considerations under the Clean Air Act. They are further articulated in the accompanying Technical Issues Document.

1. *Emissions trades must involve the same criteria pollutant.* An emission reduction may only be traded against an increase in the same criteria pollutant. For example, only reductions of SO_2 can be substituted for increases of SO_2.

2. *All uses of ERCs must satisfy applicable ambient tests.* The Clean Air Act requires that all areas throughout the country attain and maintain national ambient air quality standards and meet applicable ambient requirements relating to PSD increments and Class I protection, including visibility. The ambient effect of a trade depends on the dispersion characteristics of the pollutant involved. With the exception of visibility for NO_x, dispersion considerations will generally not affect trades involving VOC or NO_x, whose impacts occur across broad geographic areas. For these pollutants "pound for pound" trades may be treated as equal in ambient effect where all sources involved in the trade are located in the same control strategy demonstration area, or where the state otherwise shows such sources to be sufficiently close that a "pound for pound" trade can be justified. However, dispersion characteristics are important for bubble and offset trades of SO_2, particulates, CO, or lead, whose ambient impact may vary with where the emission increases and decreases occur. To assure ambient equivalence, such trades of these pollutants must satisfy ambient tests under the modeling screen discussed in the Technical Issues Document or under a similar, equally effective approach.[16]

3. *Bubbles must not increase hazardous pollutants.* Bubbles may not be used to meet applicable requirements of National Emissions Standards for Hazardous Air Pollutants (NESHAPs) promulgated under section 112 of the Clean Air Act, to increase emissions at any source beyond the levels applicable NESHAPs prescribe, or to create any net increase in baseline emissions of a pollutant regulated under section 112. The applicable baseline for regulated sources is the lower of actual or NESHAPs-allowable emissions of the hazardous pollutant.

Where a NESHAP has been *proposed* but not yet promulgated for a source category which emits a pollutant listed under section 112, the proposal will serve as an interim guideline for evaluating the effects of any proposed emissions trade involving a source that would be subject to the proposed standard. In general, such trades will be approvable with respect to the emissions component of the trade subject to the proposal, so long as they result in emission limits at each source emitting the relevant pollutant which are equivalent to or lower than those the proposed NESHAP would have required if already promulgated.[17]

Where a pollutant has been *listed* under section 112 or where EPA has published a Notice-of-Intent-to-List but no regulations for the source category involved in the trade have yet been proposed or promulgated, the trade will generally be acceptable with respect to the emissions component of the trade subject to notice or listing, if there is no net increase in actual emissions of that pollutant as a result of the trade.[18]

Any trade involving sources or source categories subject to the preceding subparagraphs must take place within a single plant or contiguous plants, and must credit only reductions below current actual or NESHAPs—allowable emissions, whichever is lower. But cf. generally n. 6 above and today's Technical Issues Document, section I.B.1.d.

Trades which do not meet the special restrictions discussed in this section may also be approved where surplus reductions in the pollutants addressed above compensate for increases in non-hazardous emissions of the same criteria pollutant (e.g., benzene, a hazardous VOC, is reduced to create credits for a increase in non-hazardous VOC emissions.) As long as such a trade would not result in an increase in either actual or allowable emissions of a pollutant subject to the preceding paragraphs at any source, it would not differ in nature or requirements from a trade involving only nonhazardous VOC emissions.

4. *ERCs from existing sources cannot be used to meet technology-based requirements applicable to new sources.* Under Clean Air Act section 111 and EPA implementing regulations, new affected facilities must satisfy technology-based New Source Performance Standards (NSPS), regardless of the attainment status of the area in which they are located. Under sections 165 and 173 and EPA implementing regulations, new or modified major stationary sources must also satisfy technology-based control obligations associated with pre-construction permits. These requirements prohibit use of credits from existing sources to meet or avoid applicable NSPS, and bar use of such credits to meet applicable new source review requirements for best available control technology (BACT) in PSD area, or lowest achievable emission rate control technology (LAER) in nonattainment areas.[19]

5. *States may approve bubbles in primary nonattainment areas which require but lack approved demonstrations of attainment,* provided such trades meet requirements designed to produce a net air quality benefit and the state provides certain assurances. See section II.A.1. above and the Technical Issues Document, section I.A.1.b. Bubbles which meet these objective requirements will be processed for approval by EPA.

6. *Sources need not be subject to binding compliance schedules based on current SIP requirements* before they can apply for a bubble which would supersede those requirements. Sources that are *already* subject to binding compliance schedules should be aware, however, that such schedules remain fully enforceable until a bubble affecting the schedule has been approved by EPA or under a state generic rule and the

---

[16] For similar reasons, bubbles of these pollutants must involve sources which are in the same or adjacent control strategy demonstration areas within the same general air basin.

See section II.A.1. above and Technical Issues Document, Section I.A.1.a regarding additional technical support required for certain trades in attainment areas.

While bubbles in primary nonattainment areas which need but lack approved demonstrations of attainment must produce a net air quality benefit, this does not entail additional ambient tests. Such bubbles must first meet the general tests under the modeling screen showing ambient equivalence for bubbles, prior to producing the required additional reductions. They must then produce additional reductions of at least 20% beyond the applicable baseline emissions used to demonstrate ambient equivalence. Since these additional reductions will necessarily reduce ambient concentrations below equivalence at some receptors, while continuing to meet the tests for ambient equivalence at all others, a net air quality benefit should occur and no additional ambient showings, beyond those generally required for all bubbles, are required.

[17] The allowable emission rate for a source subject to a proposed NESHAP is the limit stipulated in the proposal.

[18] Where EPA has issued a "Notice-of-Intent-Not-to-Regulate" one or more source categories for a listed pollutant, emissions of that pollutant from the unregulated source category will nevertheless be treated the same as emissions of any other listed pollutant. Under limited circumstances, similar treatment will be given to pollutants for which a "Notice-of-Intent-Not-to-List" has been published. See the Technical Issues Document, section I.B.1.d.

[19] But cf. sections I.C. and I.D. above.

Today's notice does not address whether or under what circumstances facilities subject to NSPS, BACT or LAER may surpass applicable permit limits reflecting such requirements in order to create credits for existing-source trades.

schedule has been modified accordingly. Sources subject to compliance schedules in administrative orders or judicial decrees must obtain prior approval from EPA or the relevant court, as appropriate, to be relieved from the schedule contained in the order or decree. Sources that are subject to SIP requirements remain responsible for meeting those requirements unless and until a bubble has become effective under Federal law. See section II.B.12 below.

7. States may extend certain compliance schedules. States may no longer grant compliance extensions under new or revised generic rules in *nonattainment areas*, whether or not such areas have demonstrations.[10] However, states may continue to grant compliance date extensions under generic rules in *attainment areas*, provided EPA has approved the extension provisions of the generic rule as being adequate to comply with the Clean Air Act, including requirements for attainment and maintenance of ambient air quality standards.

States that wish to give sources in nonattainment areas, and sources in attainment areas for which there is no applicable generic SIP provision, more time to implement bubbles by granting compliance extensions, must receive EPA approval of the extensions through case-by-case SIP revisions. Requests for such compliance date extensions, whether in attainment or nonattainment areas, may be submitted to EPA together with bubbles, as part of a single SIP revision package. EPA will separately evaluate the time extension portion of these SIP revision packages in accord with the Agency's normal criteria for review of time extensions, including consistency with the Act's requirements for expeditiousness, reasonable further progress, and attainment and maintenance. Sources should be aware that disapproval of such time extension requests may result in disapproval of the entire package (i.e., both post-trade limits and the time extension) or only part of it, depending on whether the state views these components of the proposed SIP revision as separable.

8. States may approve bubbles involving open dust sources of particulate emissions, based on modeling demonstrations. Open dust trades may be approved through individual SIP revisions based on acceptable modeling and/or monitoring demonstrations, provided sources agree to post-approval monitoring to determine if predicted air quality results have been realized and make an enforceable commitment to achieve necessary additional reductions if predicted results do not materialize.

9. Trade involving lead. Unlike other criteria pollutants, EPA does not designate nonattainment areas for lead. However, the Regional Administrator will review lead trades, as all other trades, to assure that they do not interfere with attainment and maintenance of NAAQS.

10. Trades involving ERCs from mobile source measures. ERCs from mobile source measures may be used to meet SIP requirements applicable to existing stationary sources, so long as such reductions are surplus, permanent, quantifiable, and enforceable. Reductions from certain types of mobile-source measures (e.g., mechanical conversion of existing vehicle fleets to cleaner fuels such as methanol) may satisfy these criteria more readily than those from other transport-related measures. However, due to possible difficulties in determining whether specific mobile-source reductions fully meet these criteria, all such trades must be implemented as case-by-case SIP revisions.

11. Interstate trades. Trades involving sources located in neighboring states may be approved, provided they meet all other requirements of today's notice. However, in order to avoid complex SIP accounting issues, where state trading requirements differ EPA will require that such trades meet the substantive requirements of the more stringent state. In general, EPA will deem ERCs created in one state to contribute to progress in the state where used to the extent of that use, provided that applicable ambient tests (section II.B.2 above) are met. Interstate trades must be implemented through case-by-case SIP revisions.

12. Bubbles must not impede enforcement. In general, bubbles are a form of SIP revision which should be treated neither more nor less stringently than other SIP revisions. Bubbles should not become a shield against enforcement actions for sources which have failed to take necessary steps to meet required control obligations on time.

Sources seeking trades should note that they remain subject to enforcement of existing (pre-trade) SIP limits until the bubble is approved. EPA will use the same principles and procedures for deciding whether to initiate enforcement actions in these circumstances as the Agency applies to any other source which is subject to a proposed or final SIP revision.

Under established EPA policy, regulated sources must be subject to an applicable, enforceable emission limit at all times. Accordingly, sources which have approved bubbles with emission limits effective at a future date, and which are not in compliance with their pre-trade limits prior to that effective date, may be subject to enforcement action, which could include penalties based on a failure to meet the pre-trade limits. Sources in these situations may wish to minimize the chance that capital expenditures may be required to meet pre-trade limits, either by (a) agreeing to post-trade compliance dates which are substantially similar to their pre-trade compliance dates, or (b) accelerating their compliance with post-trade limits.

In accord with the general principle that bubbles should be treated neither more nor less stringently than other SIP actions, implementation of this Policy Statement will be neutral with respect to EPA enforcement of pre-trade emission limits. This means that EPA will not specifically select for enforcement action noncompliant sources seeking to use a bubble either to come into compliance or to restructure traditional compliance. However, it also means that EPA will not withhold or defer enforcement simply because a source is seeking alternative emission limits through a bubble. In exercising its enforcement discretion, EPA will apply the same considerations to noncompliant sources which seek to comply through bubbles as to those which do not.

C. Banking Emission Reduction Credits

Only emission reductions that are surplus, permanent, quantifiable, and enforceable can qualify as ERCs and be deposited in EPA-approvable banks.[11] Such banks offer sources legal recognition that qualifying reductions meet these ERC requirements. However,

[10] Existing generic rules applicable to these areas must be revised to comport with this principle where they contain such generic extension provisions. EPA will publish Federal Register notices identifying any generic rules which require formal modification. Failure to resolve deficiencies identified in such a notice within the prescribed time period may result in EPA rescinding approval of the existing generic rule or issuing a notice of SIP deficiency. EPA expects states to ensure in the interim, so far as feasible, that compliance date extensions under existing generic rules are not granted to sources located in nonattainment areas. See section III below and section II.E.4. of the Technical Issues Document.

[11] Under today's notice emission reductions must be made enforceable by the state in order to qualify as ERCs and be deposited in EPA-approvable banks. However, because mere deposit of a reduction cannot result in emissions increases elsewhere, banked reductions need not be made federally enforceable until used.

the fact that an ERC has been banked does not relieve it from the need to meet all criteria of the specific regulatory program under which it is to be used.[32] Because some trades have special limitations (e.g., only reductions occurring at the same major stationary source can be used for netting), banks do not guarantee the validity or specific amount of particular banked ERCs for all potential uses or for all time. To provide maximum protection for the environment and sources and to avoid potential legal problems, state banking rules may specify the types of sources eligible to bank ERCs and any additional conditions placed on certifying, holding or using banked ERCs.

State banking rules may establish ownership rights. However, any such rights must be consistent with Clean Air Act requirements, including the requirement that SIPs provide for expeditious attainment and maintenance of ambient air quality standards and protect PSD increments and visibility. To be approvable by EPA, such banking rules must also treat banked reductions as current actual emissions "in the air" at the source of their creation, in order to protect the integrity of future air quality planning. Failure to track the ambient effects of such banked reductions (e.g. by not including them in a new or updated inventory used for SIP planning purposes, or by relying on those reductions to secure attainment redesignations) would ordinarily preclude their use as ERCs, due to double-counting. Nevertheless, states have considerable latitude in meeting these requirements, and may guarantee banked ERCs against full or partial reduction in quantity, so long as that guarantee does not undermine attainment redesignations or interfere with progress and attainment should ambient standards change or additional emission reductions be required. The Technical Issues Document, section I.C.9, outlines ways such guarantees may be made effective consistent with these requirements.

In many states, banking would be an extension of ongoing preconstruction permit activities. The state or its designee could accept and evaluate requests to certify an ERC, maintain a publicly-available ERC registry or similar instrument describing the quantity and types of banked credits, and track transfers and withdrawals of ERCs.

Because banked reductions do not increase emissions at any source, they need not be made federally enforceable until used. For administrative or other reasons states may, however, choose to make them federally enforceable upon deposit. How the state makes a reduction federally enforceable for banking will depend on the type of source at which the reduction occurs. In some states, reductions associated with other modifications at a source can be included in federally-enforceable preconstruction permits issued under rules approved pursuant to 40 CFR 51.18, 51.24 or 51.307. States with EPA-approved generic rules can use their rules' procedures to make reductions occurring at existing sources federally enforceable. See Section III below. Since these transactions involve only reductions, air quality modeling is generally not required to assure that new emission limits do not interfere with attainment and maintenance of ambient standards, protection of applicable PSD increments, or impairment of visibility in mandatory federal class I areas. Such reductions will automatically meet the generic rule's test of whether a particular limit is within EPA's preapproved array of acceptable emission limits.[33]

States without EPA-approved generic rules can adopt rules limited to banking transactions, or can use the standard SIP revision process to make reductions federally enforceable at existing sources. General state preconstruction permit or review programs that have received EPA approval may also be used for this purpose, since permits issued through such programs are federally enforceable. See 40 CFR 51.18; 51.24; 51.307.[34]

III. State Generic Trading Rules

Use of emission reduction credits under state regulations approved by EPA as generic for identified classes of trades will not require individual SIP revisions for those trades. The Technical Issues Document explains acceptable generic procedures which states may adopt to reduce the need for individual SIP revisions.

Emissions trades can be approved without case-by-case SIP revisions if evaluated by the state under EPA-approved procedures which assure that no trade which meets their terms will interfere with timely attainment and maintenance of ambient standards, protection of applicable PSD increments or visibility provisions. State generic rules are approvable only if their procedures are sufficiently replicable in operation to meet this test. By approving the generic rule, EPA approves in advance an array of SIP-compatible emission limits, and no further case-by-case Federal review or approval is required for individual trades which meet the terms of the rule.

In order to ensure that generic rules are properly implemented, EPA intends to (a) examine and comment on, together with any other public commentar, the information which must be provided for individual trades proposed by states under a generic (b) conduct reviews of individual bubbles approved under a generic rule, and (c) periodically audit the general implementation of generic rules, as part of its National Air Audit System reviews of state air programs.[35]

Any trade under a generic rule will involve emission increases at some sources and extra emission decreases at others. For trades to be approvable under a generic rule, the sum of these increases and decreases (beyond

---

[32] States may, however, expand opportunities for use of banked credits beyond those of current SIP programs (e.g., extend the "contemporaneous" period for netting), by submitting revised regulations addressing the banking and use of such credits, for approval as SIP revisions.

[33] Modeling will be necessary when a banked ERC is later evaluated for use in a trade, to the extent modeling is generally required for that particular type of emissions trade.

[34] In primary nonattainment areas which need but lack approved demonstrations, use for bubble purposes of banked credits produced by shutdowns or curtailments will continue to be allowed on the same terms as use of other banked credits, provided their use is subject to stringent qualitative review to assure technical, legal and programmatic consistency with SIP planning goals (e.g., avoidance of double-counting or "shifting demand"). However, sources which seek to use banked credits from shutdowns or curtailments for bubble purposes after publication of today's notice must show that a written application was submitted to make the shutdown/curtailment state-enforceable through or concurrent with use of a formal bank or informal banking mechanism, prior to the time the shutdown/curtailment occurred. For sources which banked or sought to bank credits from shutdowns or curtailments in these nonattainment areas prior to publication of today's notice, written evidence must be provided showing either that an expectation to deposit the credits in a formal bank was manifested to the state prior to the time the shutdown/curtailment occurred, or that the state acknowledged, before or at the time the shutdown/curtailment occurred, both the existence of that shutdown/curtailment, and the source's intent to use the resulting credits in a future trade. For additional detail on banking and use of credits resulting from shutdowns or curtailments in these or other areas, see Technical Issues Document, Sections I.A.1.a.(3)-and-I.C.

[35] See, e.g., National Air Audit System Guidance for FY 1986, Office of Air Quality Planning and Standards, EPA-450/3-85-027 (November 1985). State-approved generic trades that do not meet the terms of the relevant generic rule or any other underlying SIP requirements, which remain fully enforceable. Generic rules found to be generally deficient in substance or implementation could ultimately result in sections of SIP deficiency or rulemaking to rescind EPA's approval of the rule. For more detail on EPA oversight of generic rules, see Technical Issues Document, Section II.E.

applicable net baseline emissions) must be zero or less. Subject to this requirement, states may adopt generic rules which exempt from individual SIP revisions: (1) *De minimis* trades where total increases in emissions from all increasing sources (which must be balanced by equal or greater emissions decreases from other sources) are less than 25 tons per year (TPY) of particulates, 40 TPY of SO_2, 100 TPY of CO, or 0.6 TPY of lead, after applicable control requirements; (2) large classes of trades involving VOC or NO_x emissions;[16] (3) trades between certain types of SO_2 sources, between certain types of CO sources, between certain types of stationary lead sources, or between certain types of particulate sources, for which it can reasonably be assumed that "pound for pound" trades will produce ambient effects equivalent to those which approved air quality models would predict; and (4) other SO_2, CO, Pb or particulate trades which do not increase baseline emissions and for which carefully defined modeling predicts no significant increase in ambient concentrations.

States and sources should, however, be aware that because of replicability problems inherent in modeling, generic rules which rely on preapproved procedures for modeled demonstrations of ambient equivalence may be difficult to draft or implement, and many trades may not be approvable under such rules. For these reasons generic rules covering only the first three classes of trades above will often prove easiest to secure. EPA encourages states to work closely with EPA Regional Offices to formulate and adopt approvable rules or develop alternative approaches that equally assure attainment and maintenance of ambient standards and protection of PSD increments and visibility. See Section II of the Technical Issues Document, which details criteria under which such generic rules may be approved.

To the extent general state procedures for rulemaking or permit changes do not assure reasonable public notice of proposed and final limits or effective opportunity for comment on proposed trades, states must incorporate such provisions in their generic rules.

In primary nonattainment areas which need but lack approved demonstrations, new generic rules must require, and existing generic rules must, as requested by EPA, be revised to require bubbles to use lowest-of-actual-SIP-allowable-or-RACT-allowable emissions baselines, and produce a net air quality benefit (as described below). New or revised generic rules in these nonattainment areas must be accompanied by certain assurances of consistency with air quality planning goals as well as a commitment to make certain additional assurances when the state approves individual bubbles under the rule. Bubbles approved under existing generic bubble rules before the effective date of this policy will not be affected by these requirements. Because EPA-approved state regulations have independent legal force, future bubbles submitted under existing generic rules may also be approved by states in accord with those rules, until such rules are modified to meet the criteria below.[17]

Existing generic rules in these areas must be modified to assure that bubbles produce an overall emission reduction at least equal (in percentage terms) to the overall emission reduction from controllable sources (in percentage terms) needed to attain in the area. Criteria for modifying generic rules are set forth in Section II.D. of the Technical Issues Document, including a requirement for a reduction equal to the greater of either the percentage reduction required for attainment, or a 20% reduction in emissions remaining after application of appropriate baselines. New and pending applications for generic bubble rules which meet these criteria will be processed for approval.

EPA will publish Federal Register notices identifying any generic rules applicable to these areas which require formal modification in order to meet the progress requirements above or other requirements of EPA's current Emissions Trading Policy. These notices will identify specific deficiences and means for correcting them, and will specify a schedule for submittal and review of modified rules. Failure to resolve deficiencies identified in these notices within the prescribed time period may result in EPA rescinding its previous approval or issuing a notice of SIP deficiency.[18]

IV. Bubbles Which Require Case-by-Case SIP Revisions

States and sources must use the case-by-case SIP revision process to implement bubbles which are not covered by a generic rule. Because the case-by-case SIP revision process can take account of many more individual variations, numerous trades which could not be accomplished through generic rules or similar means may still be approvable as case-by-case SIP revisions.

EPA will take action on generic rules and individual trades submitted as SIP revisions as quickly as circumstances permit after a state has adopted a SIP revision and submitted the action to EPA. EPA encourages "parallel processing" of such SIP revisions, with EPA and the state conducting concurrent review so that both agencies can propose and take final action at roughly the same time. EPA will also publish noncontroversial SIP revisions as immediate final actions, converting them to proposals only if requests to submit adverse comments are received within 30 days (see 46 FR 44477, September 4, 1981). In all bubble actions EPA will clearly identify (or require states to identify, as appropriate) both pre- and post-trade actual and allowable emissions for each source involved in the trade, so that the ambient effects of each bubble may be known.

V. Conclusion

This Policy Statement sets out basic principles for approving individual trades and generic trading rules. It tightens many requirements in order to better ensure SIP integrity and environmental progress, while offering ample opportunities for use of approvable, environmentally-sound trades. EPA encourages states and sources to use these principles as a framework and refer to the accompanying Technical Issues Document for further discussion and examples. EPA also encourages states to develop other approaches which satisfy these principles while meeting their specific needs.

---

[16] Where visibility impairment due to elevated NO_x emissions is a concern, generic trades involving NO_x must ordinarily be subject to ambient requirements similar to those applicable to generic trades involving TSP, SO_2, CO or Pb.

[17] In the interim, EPA expects states to ensure, as far as feasible, that future bubbles approved under existing generic rules are consistent with this policy as well as the terms of their EPA-approved rules. States should be aware that without this or similar precautions, continued approval of bubbles under existing generic rules containing identified deficiences may create or accentuate plan deficiences that may have to be corrected at a later date or compensated for by other means. See section II.E.4. of the Technical Issues Document.

[18] Such notices may also be issued for existing generic rules in attainment areas and nonattainment areas with approved demonstrations. If these generic rules are found to require procedural revision in order to make them consistent with the current Emissions Trading Policy. See Technical Issues Document, section II.E.4.

EPA recognizes the additional timing burden which may be imposed on bubble applicants in areas where new generic rules cannot be or have not been developed to meet the specific air quality benefit requirements described above, and will attempt, so far as feasible, to ameliorate that burden in implementing this policy. See, e.g., n.6 and section II-B-12, above and related Preamble discussion, at n.46 and accompanying text.

As a policy statement, this notice does not establish conclusively how EPA will resolve issues in individual cases. EPA will accept public comment on specific SIP changes submitted under it, and will review individually each generic rule and those emissions trades submitted as SIP revisions to determine their acceptability under the Clean Air Act. Interested parties will have full opportunity to scrutinize application of these principles in specific cases, and to seek subsequent judicial review of such cases after EPA has taken final action on particular trades or generic rules.

Dated: November 18, 1986.

Lee M. Thomas,

Administrator.

Emissions Trading: Technical Issues Document

Table of Contents

I. Elements of Emissions Trading
A. Creating Emission Reduction Credits
1. All Reductions Must Be Surplus
a. Use of Actual or Allowable Emissions as the Baseline: Attainment Areas and Nonattainment Areas with Approved Demonstrations of Attainment (Including Rural Ozone Nonattainment Areas)
b. Special Progress Requirements for Bubbles in Primary Nonattainment Areas Which Need But Lack Approved Demonstrations of Attainment
(1) Objective Tests For All Applications
(2) Where These Special Progress Requirements Will Apply
(3) State Assurances
(4) Treatment of Pending Bubble Applications
c. No Double-Counting of Reductions
(1) Crediting Pre-Existing Emission Reductions
(2) Crediting Reductions From Shutdowns
(3) Use of Banked Credits from Shutdowns or Other Actions for Bubble Purposes
d. Multiple Use of ERCs
e. Reductions from Uninventoried Sources
2. Alternative Emission Limits Must Be Enforceable
3. All Reductions Must Be Permanent
4. All Reductions Must Be Quantifiable
a. Calculating the Reduction
b. Describing the Reduction
B. Using Emission Reduction Credits
1. Substantive Principles for Using ERCs
a. Emissions Trades Must Involve the Same Pollutant
b. All Uses of ERCs Must Satisfy Ambient Tests
(1) De Minimis
(2) Level I
(3) Level II
(4) Level III
c. Bubbles Should Not Increase Applicable Net Baseline Emissions
d. Bubbles Should Not Increase Emissions of Hazardous or Toxic Air Pollutants
e. Existing-Source Credits Cannot Be Used to Meet Applicable Technology-Based Requirements for New Sources
f. Trades Involving Open Dust Emissions
g. Interstate Trades
h. Trades near PSD Class I Areas
i. Effect on Trades of Subsequently-Discovered Clean Air Act Problems: Revisitation Considerations
2. Procedural Steps for Using ERCs
a. Effect of Existing Compliance Schedules
b. Extensions of Compliance Deadlines
c. Pending Enforcement Actions
C. Banking Emission Reduction Credits
1. Banking Rules Must Designate an Administering Agency
2. Only ERCs May be Banked
3. Possible Limitations on Use of ERCs for New Source Permitting
4. Sources Should Apply to Bank Surplus Reductions As Soon As They Decide to Make Them
5. Procedures for Banking Surplus Emission Reductions Should Be Defined
6. Banking Rules May Establish Ownership Rights
7. Banking Rules Must Establish an ERC Registry or Its Equivalent
8. Possible Adjustments to ERCs Based on Enforcement Considerations
9. Possible Adjustments to ERCs Based on Ambient Attainment Considerations
a. ERCs Generated Prior to the Design or Baseline Year Could Be Eliminated
b. ERCs Could Be Guaranteed Against Adjustment
c. Use or Deposit of ERCs Could Be Temporarily Suspended
d. Across-the-Board Discounting
II. Trades Covered by State Generic Rules
A. General Principles for Evaluating Generic Rules
B. Scope of Generic Rules
1. VOC or NO_x Trades
2. Particulate, SO_2, CO or Pb Trades
3. Limits on Trades Exempt From SIP Revisions Under Generic Rules
4. Other Generic Mechanisms for Exempting Particulate, SO_2, CO or Pb Trades From Case-by-Case SIP Revisions
C. Enforcing Emission Limits Under Generic Rules
D. Generic Bubble Rules in Primary Nonattainment Areas Which Lack Approved Demonstrations of Attainment
E. EPA Oversight of Generic Rules
1. EPA Comment on Trades Proposed Under Generic Rules
2. Reviews of Individual Bubbles Approved Under Generic Rules
3. EPA Audits of the Implementation of Generic Rules
4. Deficient Generic Trades
5. Deficient Generic Rules
F. Public Comment
G. EPA Notification
H. Rulemaking on Generic Rules
III. Trades Not Covered by State Generic Rules
Appendix A: Regional EPA Emissions Trading Coordinators
Appendix B: Definitions of "Actual," "Allowable" and "Baseline" Emissions For Purposes of Emissions Trading
Appendix C: Approvable Modeling Approaches
Appendix D: Approvable Averaging Tim for VOC Trades
Appendix E: Radii of Significant Impact for Approving "Complex Terrain" PM, SO_2 and CO Trades Under Level I Modeling Approaches
Appendix F: CFR Part 51 Conversion Table

EMISSIONS TRADING: TECHNICAL ISSUES DOCUMENT

This Document offers more detail on technical issues for firms and pollution control agencies seeking to implement individual emissions trades or generic trading rules that meet the principles in EPA's final Emissions Trading Policy Statement. It describes both the legal requirements for emissions trades under the Clean Air Act, and a range of legal options which states [1] and sources may consider. States and firms may pursue other approaches consistent with those discussed here.

Section I of this Document explains general principles governing all emissions trading. Section II explains principles governing state generic rules. Section III discusses special considerations for emissions trades which must be implemented as case-by-case SIP revisions.

Because these sections reflect general Clean Air Act principles, states, individual sources or public commenters remain free to show that a general principle does not apply to particular circumstances or can be satisfied using another approach. States, sources and commenters have this option under current law, and nothing in the Policy Statement or this Document restricts their opportunity to make such showings.

Nothing in today's notice alters EPA new source review requirements or exempts owners or operators of stationary sources from compliance with applicable preconstruction permit regulations in accordance with 40 CFR 51.18, 51.24, 51.307, 52.21, 52.24, 52.27, and 52.28. Interested parties should, however, be aware that bubble trades are not subject to preconstruction review or regulations where these trades do not involve construction, reconstruction or modification of a source within the meaning of those terms in the regulations listed above

[1] "States" includes any entity properly delegated authority to administer relevant parts of a State Implementation Plan (SIP) under the Clean Air A

I. Elements Of Emissions Trading

The basic elements of any emissions trade are the *creation* of an emission reduction credit (ERC), its *use* in a trade and its possible *storage* in a bank prior to use.

A. Creating Emission Reduction Credits

States may grant credit only for those emission reductions that are surplus, enforceable, permanent, and quantifiable. Otherwise use of ERCs might degrade air quality, threaten the viability of the area's SIP, and make more stringent control requirements necessary.

1. All Reductions Must Be Surplus

At minimum, only emission reductions not required by current regulations in the SIP, not already relied on for SIP planning purposes, and not used by the source to meet any other regulatory requirement can be considered surplus and substituted for required reductions as part of an emissions trade.

The first step in qualifying a reduction as "surplus" is to establish a level of baseline emissions. This baseline represents the level of required emissions beyond which reductions must occur for a source to be eligible for credit. Three baseline factors—emission rate, capacity utilization, and hours of operation—must be used to compute and compare pre-trade and post-trade emission levels.[2]

The baseline for each source must be established both on an annual basis and for all other averaging periods consistent with the relevant NAAQS and PSD increments. This approach is necessary to protect the ambient standards and PSD increments on a short term as well as an annual basis. The baseline will generally be determined by the attainment status of the area,[3] by the way the state developed its SIP, and by whether the area is subject to PSD requirements.

a. Use of Actual or Allowable Emissions as the Baseline: Attainment Areas and Nonattainment Areas With Approved Demonstrations of Attainment (including rural ozone nonattainment areas). In attainment areas, baseline emissions must generally be calculated using the lower of actual or allowable values[4] for all three baseline factors. However, allowable values corresponding to one or more of these factors, when higher than corresponding actual values, may be used in calculating baseline emissions, provided those values are shown to be used or reflected in an approved demonstration.[5] The burden of meeting this test rests with the state or applicant. Where the State or applicant cannot show by written evidence [6] that the demonstration assumed an allowable value for a given baseline factor, appropriate modeling would be required in order to use an allowable value for that factor in calculating baseline emissions for the source.[7] This will require a Level II modeling analysis as specified in the modeling screen described below, using actual emissions for the pre-trade case, unless the appropriate EPA Regional Office ("the Region") determines that additional technical support is necessary to protect the NAAQS, PSD increments or visibility. Additional technical support may be necessary because crediting the difference between actual and allowable values for even one of these factors may produce a post-trade increase in actual emissions sufficient to jeopardize applicable standards, increments or visibility.

Additional technical support is not necessarily limited to determining the impact of the increases from the trade. The Region may require such additional technical support, up to and including full Level III modeling, as is necessary to assure that applicable NAAQS, PSD increments and visibility requirements will be protected. It may require the determination of background concentrations to which the impacts of possible emissions increases that would otherwise fall below Level II significance values must be added. Background concentrations should be determined in a manner consistent with EPA's *Guidelines on Air Quality Models*.

In attainment areas where the PSD baseline has been triggered, the trading baseline for a source must generally be computed using actual values for all three baseline factors (i.e., only reductions below a source's actual emissions can be considered surplus). Because 40 CFR 51.24 and 52.21 specify that increses in actual emissions occurring after the PSD baseline date consume PSD increment, any trades based on allowable emissions which would potentially increase actual emissions must perform at least a Level II modeling analysis using actual emissions for the pre-trade case, and provide additional technical support if deemed necessary by the Region to demonstrate that they protect the relevant increment ceiling, NAAQS, and visibility.

In nonattainment areas with approved demonstrations, baseline emissions for a source may be calculated using either allowable values or actual values for the three baseline factors, depending on the assumptions used in developing the area's demonstration.[8]

Some states relied on allowable values for certain sources in developing their SO_2 and TSP attainment plans. In these nonattainment areas, sources may use allowable values in calculating baseline emissions, to the extent the state used or assumed those allowable values as the basis for its demonstration. The burden of showing that an allowable value was used or reflected in an approved demonstration rests with the state or applicant which seeks to use an allowable value.[9]

Other nonattainment areas either used inventories based on actual emissions, or relied on measured (and therefore "actual") ambient air quality values, as the primary basis for determining SIP emission limits needed

---

[2] For further discussion of these factors as they relate to the calculation of baseline emissions, see Appendix B.

[3] Unclassified areas are treated as attainment areas for permitting and emissions trading purposes. *Unlike other* criteria pollutants, EPA does not designate nonattainment areas for lead. However, the Regional Administrator will review lead trades, as all other trades, to assure that they do not interfere with attainment and maintenance of the NAAQS.

[4] For the definition of "actual" and "allowable" values, and further discussion on calculation of baseline emissions, see Appendix B.

[5] This statement does not apply to netting, where "contemporaneous" actual emissions are always the baseline. See, e.g., 40 CFR 51.24(b)(3).

Bubbles in areas with demonstrations based solely on qualitative judgements (e.g., the "example repos" approach or no technical support) ordinarily may not rely, without appropriate modeling, on allowable values in calculating baseline emissions. However, bubbles in areas with demonstrations based on rollbacks or dispersion modeling may use allowable values that are reflected in the demonstration.

[6] For example, the demonstration calculations themselves, accompanying materials, or affidavits from those who constructed the demonstration.

[7] In certain circumstances an allowable baseline value specified in a preconstruction permit will be deemed equivalent to one used or reflected in an approved demonstration. For example, a source in an *attainment* area where a PSD baseline has been triggered may use allowable values consistent with its preconstruction permit, if that source's emissions are not reflected in the PSD ambient baseline concentration. (However, if modeling using allowable emissions predicts a PSD increment violation, then additional analyses must be done to assure that the PSD increment is protected.) A source in a *nonattainment* area may use allowable values consistent with its preconstruction permit to calculate its baseline, provided that permit postdates the nonattainment designation, SIP call, design year, or baseline inventory year, whichever is applicable.

[8] This statement does not apply to netting, where "contemporaneous" actual emissions are always the baseline. See, e.g., 40 CFR 51.18(j)(1)(vi). See also Appendix B for detailed discussion of "actual" and "allowable" emissions.

[9] See n. 6 and 7 above.

to demonstrate attainment. In some areas, SIP demonstrations were based merely on qualitative judgments (e.g., "example region" approaches). Baseline emissions for sources in all these other areas must generally be calculated using the lower of actual or allowable values for each baseline factor. However, states may approve, on a case-by-case basis, use of allowable values in calculating baseline emissions, where they explicitly demonstrate that such use comports with reasonable further progress and will neither create a new ambient violation nor delay the planned removal of an existing violation. Such demonstrations require full Level III modeling and must be submitted to EPA as case-by-case SIP revisions.

EPA deems designated *Rural Ozone Nonattainment Areas* to possess acceptable demonstrations of attainment provided they have an approved new source review rule and require RACT controls for all major VOC sources for which EPA has issued Control Technique Guidance (CTG) documents. (See, e.g., 43 FR 21673 (May 19, 1978)). Because these areas' nonattainment is generally caused by emissions from sources in a nearby urban area, control of emissions from that area is expected to bring the rural area into attainment. Put differently, EPA does not require rural areas to cure problems due to transport from pollution-generating areas which rural areas cannot control. However, EPA believes that further clarifications are required for bubbles in these areas.

Sources involved in such bubbles must use RACT emission limits in calculating baseline emissions, if subject to Group I or II CTGs under the EPA approved SIP for these areas. Sources subject to other SIP emission limits must use those limits in calculating baseline emissions. Other baseline factors must also be consistent with the applicable SIP requirements, and will generally be actual historical values. Where a source is not regulated by the EPA-approved SIP its baseline will be actual emissions in the year EPA approved the Part D plan for the affected rural area. In those approvals, EPA presumed that controls for sources in the upwind urban areas, as well as RACT on CTG sources in the rural area, would bring about attainment in the rural area, and that non-CTG sources in the area, unless regulated by the SIP, could continue to emit at actual, non-RACT levels without interfering with attainment in those areas. See also 43 FR 21673 (May 19, 1978).

b. Special Progress Requirements for Bubbles In Primary Nonattainment Areas Which Need But Lack Approved Demonstrations of Attainment. EPA will approve bubbles which are consistent with the attainment needs of these areas, which produce a net air quality benefit, and which therefore secure interim progress towards attainment.[10]

(1) *Objective Tests For All Applications.* Bubble applications in primary nonattainment areas which require but lack approved demonstrations of attainment will be deemed to produce a net air quality benefit and will be processed for approval if they:

(a) Use lowest-of-actual-SIP-allowable or RACT-allowable emissions baselines. Such baselines are calculated using either:

(i) The actual emission rate, the SIP or other federally enforceable emission limit or the applicable RACT emission limit,[11] whichever is lower, to compute the baseline for each source involved in the trade. This baseline factor shall be determined as of the date of the source's application to bank or trade, whichever is earlier.

(ii) The lower of actual or allowable capacity utilization and hours of operation to compute the baseline for each source involved in the trade. Actual values shall generally be based on the two years of operation preceding the application to bank or trade, unless another two year period is shown to be more representative of actual operations. Sources which shut down prior to the application to bank or trade have zero emissions, and therefore no credit is available.

For sources which banked or sought to bank credit in these nonattainment areas prior to publication of today's notice, the "date of application to bank" is the date of written application to the states to bank credit through a formal bank or informal banking mechanism for use in future trades. For sources which seek to bank credit in these areas following publication of today's notice, the date of application to bank will be the date of written application to the state to *make a reduction state-enforceable* through or concurrent with use of a formal bank or informal banking mechanism.

(b) Using baseline emissions defined above, meet applicable *de minimis*, Level I, Level II or Level III modeling tests for ambient equivalence, as appropriate.

(c) Produce a substantial net reduction in actual emissions (i.e., a reduction of at least 20% in the emissions remaining after application of the baselines specified above).

(d) Are accompanied by the assurances of consistency with ambient progress and air quality planning goals specified in section I.A.1.b.(3) below.

(2) *Where These Special Progress Requirements Will Apply.* The following primary nonattainment areas need but lack approved demonstrations, and bubbles within them are therefore subject to the special progress requirements in section I.A.1.b.(1) above:

(a) Areas that are designated primary non-attainment areas under section 107 for the pollutant involved in the trade and which failed to submit a 1979 Part D attainment demonstration or which submitted one that has not yet received full EPA approval. This includes primary total suspended particulate (TSP) nonattainment areas which submitted a SIP that did not include an actual demonstration of attainment but still received EPA approval (i.e., a "RACT plus studies" SIP).

(b) Extension nonattainment areas which failed to submit a 1982 SIP demonstration, or which submitted one that has not yet received EPA approval. Also included are those ozone nonattainment areas that are unable to demonstrate attainment by 1987, unless a demonstration of attainment for the area is subsequently approved by EPA.

(c) Areas that have received either: (1) A section 110(a)(2)(H) notice of deficiency based on failure to attain or maintain the National Ambient Air Quality Standards (NAAQS), in the form of a SIP call or a new section 107 or 171(2) nonattainment designation; or (2) a notice of failure to implement an approved SIP.

(d) Areas which received notice from EPA that they have failed to meet conditions in their EPA-approved SIPs, including commitments to adopt particular regulations by specified dates. The one exception would occur where the only portion of the SIP (including the attainment demonstration) lacking full approval is the inspection/maintenance provision for mobile sources. In these circumstances, stationary-source bubbles will be treated as if the area had a fully approved SIP.

(e) Any area that does not have an EPA-approved or EPA-promulgated pl for lead.

---

[10] While not all of today's new requirements for bubbles in these areas are strictly "baseline" matters, all basic requirements for these bubbles are set out here for simplicity. New requirements also apply to generic bubble rules in these areas. See Section II.D below.

[11] Where an emission limit for a source involved in the trade has not previously been approved by EPA as RACT, a baseline reflecting a negotiated RACT emission rate must be agreed upon by the source, state and EPA for the source in question.

(3) *State Assurances.* EPA will not approve a bubble in primary nonattainment areas needing but lacking approved demonstrations unless the state provides assurances that the proposed trade will be consistent with its efforts to attain the ambient standard. The state must make the following representations to the EPA Regional Office in or with the letter formally submitting the bubble as a revision to the SIP:

(a) The resulting emission limits are consistent with EPA requirements for ambient air quality progress, as specified in Section I.A.1.b.(1) above.

(b) The bubble emission limits will be included in any new SIP and associated control strategy demonstration.

(c) The bubble will not constrain the state or local agency's ability to obtain any additional emission reductions needed to expeditiously attain and maintain ambient air quality standards.

(d) The state or local agency is making reasonable efforts to develop a complete approvable SIP and intends to adhere to the schedule for such development (including dates for completion of emissions inventory and subsequent increments of progress) stated in or with the letter formally submitting the bubble or previous such letters.

(e) The baseline used to calculate the bubble emission limits is consistent with the baseline requirements in section I.A.1.b.(1) above.

These state assurances must be made in writing by the appropriate state or local authority (e.g., State Air Director, Air Pollution Control Board, or Legislative Committee). EPA will not second-guess such state representations, provided: (1) They are a substantial test applied by the state to each bubble, and (2) the state has explained how the proposed bubble is consistent with the area's projected attainment strategy. Nor will EPA examine, or expect states to examine in making such representations, any specific source's subjective motivation in making claimed reductions.

(4) *Treatment of Pending Bubble Applications.* "Pending bubbles" means those which are currently pending at EPA Regions or Headquarters, as well as any bubble applications which were formally submitted to EPA Regions under the 1982 policy but returned without action because final bubble criteria had not yet been issued. In primary nonattainment areas needing but lacking demonstrations, these bubbles should contribute to progress towards attainment. "Progress towards attainment" means some extra reduction beyond equivalence, with the lowest-of-actual-SIP-allowable-or-RACT-allowable emissions baseline applied as of the time applicants originally sought credit. In other areas these bubbles must show that applicable standards, increments, and visibility requirements will not be jeopardized. Pending bubbles which meet these tests and all other applicable requirements of the 1982 policy will be processed for approval.

Pending bubbles may undergo limited modification by the states or sources which submitted them in order to meet the new requirements outlined above (e.g., it may be necessary to recalculate the applicable baseline emissions of certain bubbles in nonattainment areas needing but lacking demonstrations and to reconfigure those bubbles in response to the reduced credit which may be allowed under the new more stringent requirements). However, pending bubbles which prior to final EPA approval are changed to the extent that they no longer reasonably resemble the original proposal qualifying for pending bubble status (e.g., those which are substantially expanded in scope or changed to involve primarily different sources of emission reduction credit) will be considered new bubbles subject to all of the requirements of today's notice.

Bubble applications which were submitted to EPA Regions by states, but which were withdrawn (or rejected) as inadequate under the 1982 policy, are not "pending." These bubbles, if reformulated and resubmitted, must meet all requirements of today's notice applicable to new bubble applications.

(c.) *No Double-Counting of Reductions.* At minimum, to be considered surplus an emissions reduction cannot already have been claimed as part of a demonstration or updated emission inventory by any state air quality plan or have been used by the source to meet any other regulatory requirement. Double-counting of reductions—granting credit for the same emission reduction, e.g., once to the state as part of its nonattainment SIP demonstration or PSD baseline, and a second time to a source for use in an emissions trade, must be addressed in the following situations.

(1) *Crediting Pre-Existing Emission Reductions.* In *nonattainment areas* credit generally cannot be granted for emission reductions made before monitoring data is or was collected for use in current SIP planning. Because monitored ambient levels *already* reflect these emission decreases, such decreases may have been assumed in calculating the further reductions needed to attain ambient standards. States must clearly show that the existence of these reductions has been accounted for in their submissions in order to gain credit for these reductions.

States should also clearly identify the inventory baseline date before which reductions will not qualify for credit. The earliest acceptable baseline date would normally be the year of the most recent emissions inventory used in planning Part D SIP revisions under the Clean Air Act Amendments of 1977.[12] Where emissions inventories or other data are updated for tracking RFP and correction of Part D SIPs, the new inventories must treat banked emissions reductions as current actual emissions "in the air" at the source where created, so that corrected SIPs do not inadvertently rely on these prior reductions and cause them to be lost for use. If inventories do not treat these banked emissions as "in the air," or if they are otherwise relied upon for SIP planning purposes, such reductions can no longer be credited for trading.[13]

In primary nonattainment areas which need but lack approved demonstrations of attainment, emission reductions achieved prior to application to bank or trade (whichever is earlier) will not be credited for use in bubbles. See section I.A.1.b.(1) above. Regardless of whether they meet other baseline tests, such reductions were not reasonably elicited by the opportunity to trade in a practical, objective sense determined by timing, and cannot be used to meet existing-source SIP requirements absent a demonstration.[14]

In attainment areas, reductions at *major stationary sources* which commenced construction *after* January 1, 1975 may be able to qualify for credit whether such reductions occurred before or after the PSD baseline triggering date. See 40 CFR 51.24(b)(13)(ii) [45 FR 52719-20; August 7, 1980]. Other emission reductions (e.g., at minor sources) cannot qualify for credit where the PSD baseline date *is or has been triggered* and such reductions occurred prior to the trigger date, unless these reductions are not assumed in the PSD baselines. Since banked emission

---

[12] For baselines and base year dates in rural ozone nonattainment areas, see section I.A.1.a. above.

[13] In order to help avoid such results, states may wish to make sources responsible for report banked emission reductions when surrendering to the state inventory reporting requirements.

[14] In all nonattainment areas, emissions reductions achieved by shutting down or permanently curtailing an existing source prior to application for [illegible] cannot normally be credited as offsets. See 40 CFR 51.18(j)(1)(ii). EPA proposed on August 28, 1986 to remove this restriction. See 51 FR 30472, 30473. However, it remains in effect unless and until EPA takes final action on that proposal.

reduction credits must be considered to be "in the air" for all planning purposes, if the baseline date is triggered before banked credits are actually used, such banked credits will be considered as part of the baseline and will not consume increment when used in an emissions trade.

In attainment areas where the PSD baseline has not been triggered as of the date EPA or the permitting authority takes relevant final action on the trading transaction, reductions below current SIP or permit limits generally may be used without special restrictions in bubble or banking transactions, provided they are otherwise creditable and there is assurance that NAAQS will not be violated due to any potential increase in actual emissions.[14]

(2) *Crediting Reductions From Shutdowns.* Shutdowns are generally treated for purposes of emissions trading like any other type of emissions reduction.[15] For example, the same limitations on pre-existing reductions (section I.A.1.c.(1), above) apply to shutdowns where they apply to any other type of emissions reduction. However, under current federal New Source Review requirements for major sources, shutdowns that occur prior to application for a new source permit can be used as offsets only for equipment replacing on-site productive capacity which was shut down.[17]

Shutdowns are of general concern with respect to double-counting where a state may have relied directly or indirectly on shutdowns in a SIP demonstration of attainment. (Where a primary nonattainment area needs but lacks an approved demonstration of attainment, the progress requirements of subsection I.A.1.b. above apply to bubbles involving shutdowns as well as to bubbles involving other types of emission reductions. These requirements generally bar use of reductions from shutdowns which occurred before application to bank or trade.)

In general, a state may credit reductions from shutdowns if the SIP has not already assumed credit for these reductions in its attainment strategy. So long as reductions from shutdowns have not already been counted in developing an area's attainment strategy, they are a potential source of surplus reductions.

Some SIPs assumed a set quantity of reductions from the overall difference in emissions due to new plant openings and existing plant shutdowns. These SIPs incorporated into their attainment strategy a net "turnover" reduction in emissions because new sources are generally cleaner than those that shut down. Double-counting would occur if a specific source received credit for reductions from such a shutdown, since that reduction was already assumed in the SIP's demonstration of attainment.

These states have at least two options for granting sources credit for shutdowns without this kind of double-counting. First, they may reexamine any "turnover" reductions relied on in their SIP and decide not to take credit for these reductions. This approach would require EPA approval of a revised demonstration of attainment or a SIP revision showing consistency with the existing demonstration. Such an action can be processed by EPA concurrently with a bubble or generic rule. Alternatively, these states may allow credit only after the total quantity of shutdown reductions relied on in the SIP has occurred.

In all cases where net turnover reductions have been quantified and relied on as part of attainment demonstrations, states which seek to grant shutdown credit for use in trading must be prepared to show clearly and unequivocally on the basis of SIP documents or tracking that the credit has not been double-counted or otherwise relied on for SIP planning purposes.

(3) *Use of Banked Credits From Shutdowns or Other Actions for Bubble Purposes.*[18] In primary nonattainment areas which need but lack approved demonstrations, ERCs intended for bubble purposes may generally be banked and used with the same lowest-of-actual-SIP-allowable-or-RACT-allowable baseline used for other bubble transactions.[19] This baseline should be applied as of the time banked credit is or was initially sought, with the 20% reduction applied to both sources in the trade if these credits are later used for bubbles. The lowest-of-actual-SIP-allowable-or-RACT-allowable baseline plus the 20% discount will also apply to the source using that credit in a bubble, as of the time of such subsequent bubble application.

Banked credits produced by *shutdowns and curtailments* may be used for bubbles in these areas on same terms as use of other banked credits, provided their use is subject to stringent qualitative review to assure technical, legal, and programmatic consistency with SIP planning goals (e.g., avoidance of double-counting and "shifting demand"). This review will not examine any source's motivation in shutting down a facility or curtailing production. However, the source must show that a written application was submitted to make the shutdown/curtailment state-enforceable through or concurrent with use of a formal bank or informal banking mechanism, prior to the time the shutdown/curtailment occurred. Submittal of such an application to make proposed reductions from a shutdown or curtailment state-enforceable will constitute the relevant definition of "application to bank" for timing purposes related to the evaluation of bubble credits in these nonattainment areas (see section I.A.1.b(1) above).[20] The shutdown/curtailment must be made *federally* enforcement when it is used in a bubble.

Use for bubble purposes of *nonbanked* credits resulting from current shutdowns or curtailments will be allowed in these areas if the lowest-of-actual-SIP-allowable-or-RACT-allowable baseline plus the 20% additional reduction are applied to determine the amount of credit.

No special baseline or additional reduction requirements will apply to these credits in other areas.

d. Multiple Use of ERCs. Once surplus reductions are credited, states must prohibit their multiple use. The same pound of reduction must not be simultaneously banked by two different entities or used to satisfy two different regulatory requirements at the same time. To prevent these results, states must adopt an ERC registry or equivalent means of accounting for the creation, banking, transfer, or use of ERCs. See Section I.C.8 below. States must also ensure that past reductions used in bubble, netting or offset transactions are not later credited in newly-established banks.

---

[14] However, reductions at sources other than major stationary sources on which construction commenced before January 1, 1975 may not be used to balance increases at such pre-1975 major sources.

[15] For use of banked shutdown credits for bubbles in primary nonattainment areas needing but lacking approved demonstrations, see section I.A.1.c(3) below.

[17] See n. 14 above.

[18] ERCs used for *netting* and *offset* purposes (including those derived from banks) must comply with relevant NSR and PSD requirements.

[19] For further discussion related to the use of banked credits in these nonattainment areas, see section I.C.8. below.

[20] For sources which banked or sought to bank credits from shutdowns or curtailments in these nonattainment areas *prior to publication of today's notice*, written evidence must be provided showing either that an application to deposit the credits in a formal bank was submitted to the state prior to the time the shutdown/curtailment occurred, or that the state acknowledged, before or at the time the shutdown/curtailment occurred, both the existence of that shutdown/curtailment and the source's intent to use the resulting credits in a future trade.

e. Reductions from Uninventoried Sources. Sources not included in an area's SIP emission inventory may apply for emission reduction credit. Such applications may enhance state air quality planning capabilities. Where such sources are already subject to SIP emission limits, those emission limits must be used as the basis for determining emission reduction credit, unless a more stringent baseline would normally be required (see sections I.A.1.a. and I.A.1.b. above).[21]

In *attainment areas* states may grant bubble credit to sources regardless of whether they have been included in an inventory, based on use of actual values for each of the three baseline factors, so long as those sources are not subject to lower allowable values for those factors. Allowable values, when higher than actual values, may alternatively be used in calculating the baseline, provided sources show that any resulting potential increase in actual emissions does not jeopardize applicable ambient standards, PSD increments, or visibility. (See 40 CFR 51.24 and 52.21 for specific requirements concerning PSD increments and visibility.)

In *nonattainment areas with approved demonstrations of attainment*, whether sources not on the inventory can create bubble credit will turn on how the approved demonstration of attainment was designed. Some states first monitored ambient values to determine required reductions for the SIP; then required a proportionate reduction in emissions from certain general source categories (i.e., a "rollback") in order to attain. States may grant credit for reductions from uninventoried sources in these areas in at least two ways.

(1) They could require the average of percentage reductions imposed on all inventoried sources, and grant credit only for reductions in excess of that amount. In this case, baseline emissions should be based on the percentage reduction in actual emissions for the year in which the baseline data for the rollback was gathered. Where such sources are already subject to lower SIP emisssion limits, those limits must be used to determine credit.

(2) They could require the source to use a RACT emission rate and the lower of actual or allowable capacity utilization and hours of operation to calculate the baseline, and grant credit only for reductions below that baseline. This RACT baseline would have to result in a reduction at least as great as the percentage reduction assumed in the rollback. As discussed above, where sources are already subject to lower SIP emission limits, those limits must be used as the basis for determining credit.

Other areas developed SIP demonstrations based on dispersion models rather than area-wide proportionate reductions. To the extent these SIPs demonstrated ambient attainment through reductions required from specific inventoried sources, incorporated emissions from uninventoried sources in the background or area source totals, and projected attainment by modeling the effects of those reductions, reductions from sources not on the inventory can be credited using the lower of actual or allowable values for each of the baseline factors.

In *primary nonattainment areas which need but lack an approved demonstration of attainment*, the progress requirements of Section I.A.1.b. above apply to bubbles which seek to use credit from uninventoried sources. These include a lowest-of-actual-SIP-allowable-or-RACT-allowable emissions baseline. Where a RACT emission limit has not already been adopted for an uninventoried source, such a limit must be agreed upon between the source, the state and EPA before the baseline can be determined.

States which grant credit from uninventoried sources not subject to permits, offset requirements, or enforceable production constraints should address the possibility that reductions from one such source may be followed by equal or greater increases from similar nearby sources due to shifting demand. These states must clearly demonstrate that ERCs from the uninventoried source are surplus and permanent. Interested parties should be aware that some uninventoried sources may not readily meet these tests. For example, reductions resulting from shutdown of a dry cleaner will generally not be creditable, unless the state subjects such sources to offset requirements or other measures addressing this problem. However, reductions due to improved control at such a dry cleaner would generally be creditable, since shifting demand is not implicated.

Baselines for Open Dust Trades. Fugitive dust regulations generally consist of generic work practices and operating procedures. The specifics of a fugitive dust program are generally contained in an operating permit or fugitive dust program. It is generally not possible to identify the appropriate emissions baseline from a general state open dust regulation. Therefore, for any open dust trade a negotiated RACT baseline must generally be agreed upon between the source, state and USEPA for the open dust source in question.

2. Alternative Emission Limits Must Be Enforceable

Each bubble, netting, offset or banking transaction must be approved by the state and must be federally enforceable at the time an ERC is used. Reviewing authorities may be able to use existing procedures (including preconstruction permits issued by states pursuant to 40 CFR 51.18, 51.24, 51.307 or 52.21) or EPA-approved generic rules to make reductions federally enforceable. The former possibility exists because permits issued under a federally-approved new source review program are federally enforceable. However, many preconstruction permit programs have been federally approved strictly for sources subject to NSR, and therefore may not be capable of use for transactions that do not trigger NSR requirements, or that involve sources not already subject to preconstruction permits.

With respect to the latter possibility, any enforceable compliance instrument imposing emission limits within the scope of an EPA-approved generic rule is deemed federally enforceable as part of the SIP.

Emission limits established by a trade must be incorporated in a compliance instrument which is legally binding and practicably enforceable by EPA.

Trades involving individual SIP revisions automatically satisfy this requirement. For trades under generic rules a compliance instrument could take the form of an agreement between the source and state, a preconstruction permit (if one is applicable), a consent decree, a state operating permit, or any other compliance instrument judicially enforceable by the state. To assure state enforceability, the generic rule should state that sources subject to these instruments are required to meet the emission limits contained therein. Such instruments would then automatically become federally enforceable via an EPA-approved generic rule, provided they are issued as, or part of, the compliance instrument specifically required by the generic rule.

Compliance instruments must ensure that enforcement personnel do not have

[21] Where a given source was not subject to mandatory RACT regulation due to the fact that it was not included in the inventory (e.g., where no RACT regulation for a source category was adopted because the state, unaware of the source, issued a declaration that no source existed in that source category, or where an uninventoried, non-CTG source of greater than 100 TPY emissions is located in an ozone extension area), a baseline reflecting a negotiated RACT emission rate must be agreed upon between the source, the state and EPA for the uninventoried source in question.

to test simultaneously every emission source involved in a trade. This generally requires source-specific emission limits. However, states may use pre-specified combinations of source-specific emission limits which are enforceable. States may also use an overall limit that applies to a group of emission sources which can be evaluated simultaneously, where there is a reliable and enforceable method of determining compliance (e.g., through production records, input factors, or other indirect means, or through use of a continuous emissions monitor.) See, e.g., 45 FR 80824, December 8, 1980.

The compliance instrument should also specify applicable restrictions on hours of operation, production rates or input rates; enforceable test methods for determining compliance; and necessary recordkeeping or reporting requirements. To be enforceable, these limits must state the minimum time period over which they will be averaged (e.g., lbs/hour, lbs/MBtu averaged over 24 hours, production rate/day).[33] Unless such enforceable restrictions are or have been placed on capacity utilization and hours of operation, or on overall emissions, maximum values for capacity utilization and hours of operation must generally be used in calculating post-trade emission limits and in ambient modeling of the post-trade case.

3. All Reductions Must Be Permanent

All emission increases in a trade must be compensated by emission reductions that are permanent (i.e., assured for the life of the corresponding increase, whether unlimited or limited in duration).[33] This requirement may generally be met by enforceable permit limitations confirming the amount and duration of the decrease. If reductions with a limited life are used, the life of the trade must be limited accordingly, so that the trade will automatically terminate with expiration of those reductions. The date of termination may be specified in the notice of approval. Alternatively, source(s) may agree to provide formal written notification to EPA and the state before such reductions may be discontinued and the trade terminated.

Permanence may present special but resolvable "shifting demand" problems for reductions from small sources not subject to permits, offset requirements, or enforceable production constraints. States which grant credit from these source categories must address the possibility that reductions from one source may result in equal or greater increases from similar nearby sources.[34]

In order to use, in a bubble trade, emission reduction credits derived from reductions in operations beyond those consistent with the baseline (e.g., a reduction from 3 to 2 workshifts), a source must have its preconstruction permit or other federally enforceable compliance instrument altered to reflect the curtailment in production records reflecting such curtailment (see section I.A.2 above).[35] Future increases in production beyond the permit amount may trigger new source review or require approval of a new emissions trading application which includes compensating emission reductions. As with other types of noncompliance, any source which exceeds permitted production limits would be subject to potential noncompliance penalties.

4. All Reductions Must be Quantifiable

Before an emission reduction can be credited it must be quantified. This generally means the state must establish a reliable basis for calculating the amount and rate of the reduction and describing its characteristics.

a. Calculating the Reduction. To quantify the amount of emission reductions eligible as ERCs, emissions must be calculated both before and after the reduction (i.e., assuming the post-reduction limits). Although many *different* methods of calculation are available (e.g., emission factors, stack tests, monitored values, production or process inputs), the same method and averaging time should generally be used to quantify emissions both before and after the reduction.[36]

b. Describing the Reduction. If an ERC will be used at the time of creation, only characteristics necessary to evaluate that proposed use need be described. Where the ERC will be banked and its eventual use is not yet known, a more detailed description should be provided in order to facilitate its later evaluation for a particular use.

B. Using Emission Reduction Credits

This section explains the substantive and procedural principles applicable to use of ERCs, primarily for existing-source bubbles. Many of these principles also apply to use of ERCs in netting or offset transactions. However, those transactions are governed by EPA's New Source Review regulations (40 CFR Parts 51 and 52) or state rules reflecting them.

1. *Substantive Principles for Using ERCs*

a. Emissions Trades Must Involve the Same Pollutant. The Clean Air Act requires states to develop separate plans to attain and maintain the national ambient air quality standard for each criteria pollutant. Thus, all individual bubble, netting or offset transactions must involve the same pollutant. Only reductions of particulates can substitute for increases of particulates, reductions of SO_2 for increases in SO_x, etc.

b. All Uses of ERCs Must Satisfy Ambient Tests. Because the Clean Air Act requires that all areas throughout the country attain and maintain ambient standards, protect applicable PSD increments, and protect visibility in mandatory Federal Class I (PSD) areas, bubbles must generally be equivalent in ambient effects to the baseline emission levels which they replace.[37] In *nonattainment areas*, use of ERCs cannot create a new violation of an ambient standard or delay the planned removal of an existing violation. In *attainment* areas, use of ERCs cannot violate an increment or ambient standard. Use of ERCs in either type of area cannot adversely affect visibility in any mandatory Federal Class I area.

The ambient effect of a trade generally depends on the dispersion characteristics of the pollutant involved.

VOC or NO_x Trades. Trades involving VOC or NO_x need consider only emissions. Since the ambient impact of these pollutants is areawide rather than localized, one pound of increased emissions will be balanced in ambient

---

[33] Many state permits or permit procedures may need revisions to assure that they provide adequate compliance information. However, such revisions need only occur on a case-by-case basis as individual trades are approved.

[33] Permits or other compliance instruments for limited-duration trades must clearly state such limits.

[34] States may address such potentially "shifting demand" among such sources as dry cleaners, gasoline shops and gas stations by, for example (1) prohibiting creation of ERCs due to shutdown or curtailment of such small sources; (2) limiting ERCs from small sources to categories determined not to be subject to shifting demands; or (3) requiring offsets for increases in emissions from such small sources. Cf. section I.A.1.a. above.

[35] Under EPA's NSR regulations, prior curtailments are subject to the same restrictions for offset purposes as prior shutdowns. See n. 14 above.

[36] In general, states may not approve VOC trades in ozone nonattainment areas where such trades would incorporate averaging times longer than one day. However, where VOC sources show that daily VOC emissions cannot be determined or application of RACT is not technically or economically feasible on a daily basis, longer averaging times may be permitted. See Appendix D.

[37] In primary nonattainment areas needing but lacking an approved demonstration of attainment, bubbles must achieve a net air quality benefit. See Section I.A.1.b. above.

effect by one pound of decreased emissions within the same broad geographic area, and the precise location of those increases and decreases ordinarily does not matter. For VOC and NO_x such "pound-for-pound" trades may therefore be treated as equal in ambient effect where all sources involved in the trade are located in the same control strategy demonstration area or the state otherwise shows such source to be sufficiently close that a "pound-for-pound" trade can be justified.[28]

Particulate Matter, SO_2, CO or Lead Trades. Ambient considerations are critical for trades involving emissions of sulfur dioxide, particulates, carbon monoxide, or lead, whose air quality impacts may vary with where the emission increases and decreases occur. For example, one hundred pounds of ERCs for such a pollutant created at one source may balance the ambient impact of a 100-pound increase at a source nearby, but may only balance the effect of an 80-pound increase at a source further away. In addition to distance between sources, plume parameters, pollutant characteristics, meteorology, and topography will also affect the ambient impact of such trades.[29]

This Document authorizes the use of four alternative methods of determining ambient equivalence, with the degree of required modeling linked to the likely ambient impact of the proposed trade. The following sections describe use of these alternatives to evaluate for approval many bubble or offset trades without full scale ambient dispersion modeling.[30] Use of these alternatives under generic rules is discussed in section II below.

(1) *De Minimis.* In general no modeling is needed to determine the ambient equivalence of trades in which applicable net baseline emissions do not increase [31] and in which the sum of the emissions increases, looking only at the increasing sources, totals less than 25 tons per year (TPY) for particulate matter, 40 TPY for sulfur dioxide, 100 TPY for carbon monoxide, 40 TPY for NO_x (where visibility impacts are of concern), or 0.6 TPY for lead, after applicable control requirements. Such trades will have at most a *de minimis* impacts on local air quality because no net increase in emissions will be produced and the amount of emissions being shifted is less than designated significance levels in associated EPA regulations (see, e.g., 40 CFR 51.18(j)(1)(x) and 51.24(b)(23)(i)).[32]

(2) *Level I.* In general no modeling to determine ambient equivalence is needed if:

(a) The trade does not result in an increase in applicable net baseline emissions;[33]

(b) The relevant sources are located in the same immediate vicinity (within 250 meters of each other);

(c) No increase in baseline emissions occurs at the source with the lower effective plume height as determined under EPA's *Guidelines on Air Quality Modeling;*

(d) No complex terrain [34] is within the area of significant impact of the trade [35] or 50 kilometers, whichever is less; [36]

(e) Stacks with increasing baseline emissions are sufficiently tall to avoid possible downwash situations, as determined by the formula described at 50 FR 27892 (July 8, 1985) (to be codified at 40 CFR Part 51); and

(f) The trade does not involve open dust sources.

For such Level I trades it can reasonably be assumed that "pound-for-pound" trades will produce ambient effects equivalent to those which EPA-approved air quality models would predict. Therefore modeling to determine ambient equivalence is not required.

Trades between fugitive process sources and stack sources (i.e., process-for-process or process-for-stack) can acceptably be evaluated and approved under Level I as long as the maximum distance between any emitting sources in the trade is less than 250 meters and all other Level I criteria are met.

(3) *Level II.* Bubble trades which are neither *de minimis* nor Level I may nevertheless be evaluated for approval based on modeling to determine ambient equivalence limited solely to the impacts of the specific emission sources involved in the trade, if there is no increase in applicable net baseline emissions,[37] if the potential change in emissions before and after the trade will not cause a significant increase in pollutant concentrations at any receptor for any averaging time specified in an applicable ambient air quality

---

[28] The discussion in this paragraph does not apply to NO_x trades involving visibility impacts of elevated plumes.

[29] The ambient equivalence considerations elaborated in this and following paragraphs also apply to NO_x trades involving visibility impacts of elevated plumes. See n. 28 above.

[30] Modeling is generally not required for new source netting, whose purpose is to avoid expending resources where adverse emission or ambient impacts from changes at a source are extremely unlikely. See, e.g., 45 FR 52577–78 (August 7, 1980).

[31] Interested parties should, however, be aware that in some circumstances modeling may be required to justify using certain emissions baselines prior to the trade. Where a bubble in a *nonattainment* area seeks to employ allowable values greater than corresponding actual values in the calculation of baseline emissions, and where such allowable values are not shown to be used or reflected in an approved demonstration, a full Level III modeling analysis will be required. Where a bubble in an *attainment* area seeks to employ allowable values greater than corresponding actual values in the calculation of baseline emissions, and where such allowable values are not shown to be used or reflected in an approved demonstration, a Level II modeling analysis (see below) using actual emissions for the pre-bubble case will be required unless, for bubbles processed as case-by-case-SIP revisions, the Region determines that additional technical support is necessary to protect applicable standards or increments. Where allowable values are used to calculate baseline emissions for such a case-by-case-SIP revision bubble in an attainment area where the PSD baseline has been triggered, the Region will require the technical support necessary to protect PSD increments.

Where allowable values higher than actual values are not shown to be used or reflected in an approved demonstration, states that wish to authorize their use in attainment areas *under generic bubble rules* must either state, or develop replicable procedures addressing, background values and how they will be evaluated in conjunction with the actual changes in ambient concentration predicted by the Level II analysis. These steps must be sufficient to protect standards and increments and must be approved by EPA as part of a generic rule.

For further discussion regarding calculation of baseline emissions and related modeling requirements, see Section I.A.1. above and Appendix B below.

[32] This paragraph should not be construed to imply that new sources and modifications need not meet all applicable requirments, including those specified under 40 CFR 51.18 or parallel EPA-approved state rules.

[33] See n. 31 above.

[34] Complex terrain is broadly defined by EPA as terrain greater in height than the physical stack height of a source. For bubble purposes, this definition is applicable only to sources with increasing baseline emissions.

[35] For guidance on determining "area of significant impact," see Appendix E below. The graph in Appendix E, or EPA-approved alternative approaches, may be incorporated in generic rules to make this aspect of Level I analysis replicable and operational. See Section II below.

[36] Generally, trades involving complex terrain as defined above may not be exempt from modeling under a Level I analysis. However, EPA will consider on a case-by-case basis additional criteria for determining whether a particular trade involving complex terrain, but otherwise meeting the requirements specified above, does not present a problem of potential plume impaction and may be approved under a Level I analysis. These additional criteria would include such factors as source height and emission rates, distance between stacks and elevated features, rate of topographical rise, and other considerations which may be appropriate for the particular geographic area. States are encouraged to work with EPA to determine where and how such additional criteria can be developed and applied to individual trades.

[37] See n. 31 above.

standard;[36] and if such an analysis does not predict any increase in ambient concentrations in a mandatory Federal Class I area.[37] The change in concentration from the before-trade case to the after-trade case must in general be modeled using refined models such as MPTER and ISC for each appropriate averaging time for the relevant national ambient air quality standards for each receptor, using the most recent full year of meteorological data.[38]

(4) *Level III.* Full dispersion modeling considering all sources affecting the trade's area of impact is required to determine ambient equivalence if applicable net baseline emissions will increase as a result of the trade,[39] or if the trade cannot meet criteria for approval under *de minimis*, Level I or Level II.

However, a geographically limited Level III analysis may be used in some cases where a Level II analysis predicts one or more exceedances of the Level II significance values. While this analysis will be limited in terms of geographic scope, it must otherwise meet the modeling requirements for a full Level III analysis, including consideration of all sources affecting the limited geographical area. In many situations this approach may permit the receptor area to be smaller than the trade's entire area of impact. Because of the unique nature of each situation, the appropriate limited geographic area must be determined in accord with EPA guidelines on modeling, and through case-by-case evaluation.

Bubble trades are approvable under either type of Level III analysis if they do not cause a new violation of NAAQS or PSD increments, significantly contribute to or delay the planned removal of an existing violation, or adversely affect visibility in mandatory Federal Class I areas.[40]

This three-tiered modeling approach is both reasonable and conservative. It will assure that the ambient impact of trades is at least equivalent in effect to original SIP emission limits, while conserving government resources and shortening approval times for many individual trades.

c. Bubbles Should Not Increase Applicable Net Baseline Emissions. Ordinarily, bubbles may not result in an increase in applicable net baseline emissions. Such a bubble would require a case-by-case SIP revision, and may only be approved based upon a combined Level III and Level II modeling analysis (i.e., an analysis sufficient to show that all applicable requirements of a full Level III analysis (as described above) are met, and that the bubble would not result in any exceedance of significance values specified for a Level II analysis at any receptor for any averaging time specified in an applicable ambient air quality standard.[41]

Where such a bubble is proposed in a *nonattainment* area, the state must demonstrate that the trade is consistent with the progress demonstration under an approved demonstration of attainment, revise its EPA-approved progress demonstration as part of the proposed SIP revision, or otherwise show (e.g., by modeling and any necessary compensating emission reductions) that the proposed trade comports with the EPA-approved emissions and ambient progress demonstration.

d. Bubbles Should Not Increase Emissions of Hazardous or Toxic Air Pollutants. Under the Clean Air Act all sources must meet applicable section 112 (NESHAPs) requirements for control of hazardous air pollutants. Sources may neither use a bubble to meet these requirements, nor increase emissions beyond the levels they prescribe. Where a source wishes to generate or use emission reduction credit for a criteria pollutant, and where a NESHAPs pollutant is part of the criteria pollutant stream, the emissions baseline for emissions of the hazardous pollutant from that source would be the lower-of-actual-or-NESHAPs-allowable emissions of that pollutant, applied as of the time of application for credit. Where EPA has *proposed* to regulate a source category for emissions of a pollutant under section 112, but has not yet promulgated a NESHAP for that source category, the proposal will serve as the interim guideline for evaluating the potential effects of any proposed emissions trade involving sources to which the proposed standard would apply. The emissions baseline for such a pollutant emitted by a source subject to the proposed NESHAP would be lower-of-actual-or-proposed-NESHAPs-allowable emissions for that pollutant.

In general, such trading proposals will be approved so long as they (1) result in emission limits for *each source* emitting the relevant pollutant which are equivalent to or less than those that the approved NESHAP requires or the proposed NESHAP would require if promulgated, (2) rely only on reductions below actual or allowable levels (whichever is less) of that pollutant, and (3) take place within a single plant or contiguous plants.

Where a pollutant has been *listed* under section 112 or EPA has published a Notice-of-Intent-to-List, but no NESHAP has been promulgated or proposed for a source which emits that

---

[36] In determining "significant" impact for Level II *bubble* trades, states may use the following significance values to identify trades whose potential ambient impact need not be further evaluated before approval:

10 μg/m³ for any 24-hour period for particulate matter;

5 μg/m³ for any annual period for particulate matter;

13 μg/m³ for any 24-hour period for SO_2;

46 μg/m³ for any 3-hour period for SO_2;

3 μg/m³ for an annual period for SO_2;

575 μg/m³ for any 8-hour period for CO;

2300 μg/m³ for any 1-hour period for CO;

0.1 μg/m³ for any 3-month period for Pb.

See 46 FR 52709 (August 7, 1981). For *offset* transactions, any required monitoring must follow procedures consistent with EPA's new Source Review regulations in 40 CFR 51.18 or Part 51, Appendix S, or parallel EPA-approved state regulations. "Significant" impact under 40 CFR Part 51, Appendix S is defined as 1 μg/m³ annual average for particulates, SO_2 or NO_2; 5 μg/m³ 24-hour average for particulates and SO_2; 25 μg/m³ 3-hour average for SO_2; and 0.5 mg/m³ 8-hour average and 2 mg/m³ one-hour average for CO.

[37] However, a bubble ordinarily may not be approved under Level II where other evidence related to background—i.e., formally validated ambient air quality monitoring data or previously established background values—clearly indicates that the bubble would create a new violation of an ambient standard or PSD increment, or would delay the planned removal of an existing violation.

[38] Other techniques may be approved where sources show they equally well protect NAAQS, applicable PSD increments, and visibility. For example, in limited circumstances, conservative screening models may be acceptable in lieu of MPTER and ISC. In such cases, use of a full year of meteorological data may not be necessary. Such screening models may be acceptable where: (a) The screening model shows that all the emissions from the stack(s) with increasing emissions would not produce exceedances of the Level II significance values described in n. 36 above, or (b) the stack parameters of the stack(s) with increasing emissions do not change *and* the screening model shows that the increase in emissions at the increasing stack(s) would not produce exceedances of these significance values.

[39] See discussion in I.E.1.c. below.

[40] Where a Level III modeling analysis submitted to support a voluntary trading application indicates an exceedance of an ambient requirement, EPA will review such applications on a common-sense case-by-case basis, seeking to encourage disclosure of such exceedances and avoid undue delay of decisions on the trade, while adequately ensuring protection of public health, the integrity of the SIP process (including the state's prerogatives in determining how to remedy nonattainment), and the prompt and effective remedy of any condition of nonattainment. In its review, the Agency will take into account such factors as the degree of exceedance, the contribution of the trading sources and the trade itself to the exceedance, and the degree to which such sources would be part of any solution remedying the exceedance.

[41] Where a proposed bubble increasing net baseline emissions cannot meet this test of ambient equivalence, it may not be approved as a bubble under the Emissions Trading Policy. However, sources may still submit such revised limits for approval under the general requirements applicable to SIP revisions.

pollutant, states may generally allow trades consisting of equivalent increases and decreases of actual emissions of that pollutant within a single plant or contiguous plants. Once the relevant NESHAP is promulgated, every source, regardless of any previously approved trade involving emissions of that pollutant, must meet the requirements of that promulgation.

Where EPA has decided that one or more source categories which emit a listed pollutant do not require regulation solely because of limited national exposure, emissions of that pollutant will continue to be treated the same as emissions of any other pollutant listed under section 112.

Where EPA has issued a formal Notice-of-Intent-Not-to-List a pollutant under section 112, that pollutant will ordinarily be treated as non-hazardous. *However*, where the decision not to list or not to regulate was based on limited national exposure, but the individual risk was sufficiently high that EPA committed in the announcement of its decision to support (through some formal mechanism such as a Memorandum of Understanding (MOU)) state-level efforts to develop regulations, the pollutant will be treated as listed for trading purposes in order to assure that such state efforts are not compromised. The model for the intended scope of this classification is EPA's acrylonitrile decision. (50 FR 24319; June 10, 1985).

If a substance is neither listed nor regulated as hazardous under section 112, nor meets any of the other conditions specified above, but has been formally listed or regulated as toxic under any comparable health-based federal statute, the Administrator may consider this fact in evaluating trades which may increase emissions of that substance. This authority has not been delegated within EPA by the Administrator. See Clean Air Act section 301(a)(1), 42 U.S.C. 7601(a)(1).[44]

Exception. Trades which involve the pollutants addressed in this section but do not meet the special restrictions discussed above, may also be approved where surplus reductions in those pollutants compensate for increases in non-hazardous emissions of the same criteria pollutant. For example, a source emitting benzene may trade with a source emitting a non-hazardous VOC without meeting these special restrictions, if the benzene emissions are reduced as a result of the trade (i.e., "traded down"). As long as such a trade would not result in an increase in either actual or allowable emissions of a pollutant subject to the preceding paragraphs at any source, it would not differ in nature or requirements from a trade involving only non-hazardous VOC emissions.

e. Existing-Source Credits Cannot Be Used to Meet Applicable Technology-Based Requirements for New Sources. Under Clean Air Act section 111 and EPA implementing regulations, new affected facilities must satisfy technology-based New Source Performance Standards (NSPS), regardless of the attainment status of the area in which they are located. Under sections 165 and 173 and EPA implementing regulations, new or modified major sources must also satisfy technology-based control requirements associated with preconstruction permits. These requirements prohibit use of credits from existing sources to meet or avoid applicable NSPS, and bar use of such credits to meet applicable new source review requirements for best available control technology (BACT) in PSD areas, or lowest achievable emission rate control technology (LAER) in nonattainment areas.[45]

However, modifications of existing major sources in PSD and nonattainment areas with an EPA-approved "plantwide" definition of source can use "contemporaneous" reductions in actual emissions from within the same source to "net out of" New Source Review.[46] Under such "netting," sourcewide increases in potential emissions that do not exceed designated levels of significance (see 40 CFR 51.18(j)(1)(x), 51.24(b)(23), and 52.21(b)(23)) *will not be considered* "major modifications" of the source under 40 CFR 51.18, 51.24, 51.22, 51.307, 52.28, or 52.27. Thus, while these source changes must still meet applicable NSPS, NESHAPs, preconstruction applicability review requirements under 40 CFR 51.18 (a)–(h) and (l), and SIP requirements, they are not subject to new source review requirements for major modification because they are not considered "major."[47]

f. Trades Involving Open Dust Emissions. Trades involving open dust sources of particulate emissions may be approved through case-by-case SIP revisions based on modeled demonstrations of ambient equivalence. Sources proposing such trades must commit, as part of the trade's approval, to (i) undertake a post-approval monitoring program to evaluate the impact of their control efforts, and (ii) make further enforceable reductions if post-trade monitoring indicates initial open dust controls do not produce the predicted air quality results.

g. Interstate Trades. EPA will approve trades which involve sources located in neighboring states where such trades meet the criteria below and all other approval criteria applicable under today's notice. Where state trading requirements differ, EPA will require that trades with increasing and decreasing sources in different states meet the substantive requirements of the more stringent state. In general, in order to avoid complex accounting problems, EPA will deem ERCs created in another state to contribute to progress in the state where used, to the extent of that use. Such trades must be accomplished through case-by-case SIP revisions.

---

[44] Trades involving emissions streams partially or wholly composed of any pollutants subject to special considerations under this section must meet two separate and distinct tests to be approved. First, such trades must be approvable under the criteria and principles which apply to all trades, as discussed throughout this policy (i.e., such trades must meet baseline and other requirements for the relevant criteria pollutant). Second, such trades must be approvable with respect to the hazardous pollutant fraction of the criteria pollutant emission stream. This means that there must be no net increase in emissions of the pollutants addressed in this section, as a result of such trades. Where a NESHAP has been promulgated or proposed, the baseline for determining whether such an increase has occurred is the lower-of-actual-or-NESHAPs-allowable emissions for the hazardous component of the trade, for the source which emits that component. The promulgated or proposed NESHAP limit not only is used to define the allowable emissions for that source, but serves as an absolute ceiling on the source as well. Where a NESHAP has not yet been promulgated or proposed, the baseline for determining whether such an increase has occurred is generally actual emissions for the hazardous pollutant component of the trade. But cf. today's Policy Statement at n. 6.

[45] Today's notice does not address whether or under what circumstances facilities subject to NSPS, BACT or LAER may surpass applicable permit limits reflecting such requirements in order to create credits for existing-source trades.

[46] "Contemporaneous" means a reasonable period for accumulating increases and decreases in emissions, as specified by the state. See 40 CFR 51.18(j)(1)(vi) and 51.24(b)(3)(b)(iii).

[47] Netting also applies under the narrower "dual definition" of "source" in certain circumstances. For example, firms may use reductions within the plant to compensate for increases at several emitting units which, while not individually significant, might otherwise add up to a significant increase plantwide.

Under current EPA regulations, if a nonattainment area is subject to a moratorium on new preconstruction permits for major sources or modifications and the area does not have an approved New Source Review program, then the area automatically uses a plantwide definition. See 40 CFR 52.24.

EPA's general expansion of opportunities for states to use the plantwide source definition for certain nonattainment areas (49 FR 50756, October 14, 1984) was affirmed by the U.S. Supreme Court on June 25, 1986: *Chevron U.S.A., Inc. v. Natural Resources Defense Council*, 104 S. Ct. [illegible], 14 ELR 20507, *overruling Natural Resources Defense Council, Inc. v. Gorsuch*, 685 F.2d 718, 12 ELR 20542 (D.C. Cir. 1982).

h. Trades Near PSD Class I Areas. EPA or a state operating under a generic rule must notify the Federal Land Manager if an emissions trade will take place within 100 kilometers of a PSD Class I area. Notification must occur early enough in the review process to allow at least 30 days for the submittal of comments before the trade will be approved by the reviewing authority.

Where a bubble within 50 kilometers of a PSD Class I area is submitted to EPA as a case-by-case SIP revision, the Region may call for additional technical support, beyond the applicable requirements of the modeling screen described in section I.B.1.b. above, if deemed necessary to protect air quality in the Class I area.

i. Effect on Trades of Subsequently-Discovered Clean Air Act Problems: Revisitation Considerations. If ambient violations are discovered in an area where EPA has approved a trade, or if other violations of Clean Air Act requirements are discovered in that area, sources in the trade should be aware that they are potentially subject to requirements for additional emission reductions, just as are all other sources in the area.[48]

[48] While sources involved in a trade, like all other sources, may be subject to requirements for additional emission reductions, neither previous trades approved by EPA or by states under EPA-approved generic rules, nor emission reduction credits used as part of a bubble, offset or netting action, should be terminated.

Such termination could occur, for example, where two sources in a given source category were subject to pre-bubble mass emission limits of 100 TPY each and post-bubble limits of 50 TPY and 150 TPY respectively. Assume the state imposes a new category-wide regulation which would normally limit those sources to 40 TPY each. In this case, the first source should be required to meet the new 40 TPY limit (i.e., it should be required to produce additional reductions of 10 TPY), while the second source should be subject to a new limit of 90 TPY (i.e., a level reflecting the continued existence of the 50 TPY emission reduction credit). Termination of the emission reduction credit would occur either by requiring the first source to produce additional emission reductions of 60 TPY (i.e., more than its current level of emissions), or the second source to meet the 40 TPY limit. Either of these results would undermine the purpose of today's notice by eliminating the predictability required for generation or use of ERCs. They could also penalize trading sources for taking environmentally beneficial measures sooner than required, since it would often be more difficult to achieve the new reductions than had earlier voluntary steps not been taken.

For these reasons, EPA urges states not to take such credit-terminating actions unless there is no other practical way to satisfy the requirements of the Clean Air Act.

Today's procedures for deposit and use of banked credits already address additional state emission reduction needs in the context of banking (see section I.C.3. below). States should, however, account for all previous trades and previously granted emission reduction credits in estimating emission reductions resulting from new control strategies, in order to avoid problems due to double-counting.

2. Procedural Steps for Using ERCs

Bubble trades may be implemented through individual SIP revisions or state generic rules. This section describes principles applicable to either procedure. General principles for generic rules are addressed in Section II below. Special considerations for trades which require individual SIP revisions are addressed in Section III.

a. Effect of Existing Compliance Schedules. EPA's 1979 bubble policy required that sources be subject to binding compliance schedules based on original SIP emission limits before being eligible to apply for bubbles. Because of the time required to process bubble applications as case-by-case SIP revisions, this requirement tended either (a) to discourage sources faced with tight milestones for the installation of conventional control equipment from pursuing bubble applications, where they had agreed in good faith to SIP compliance schedules before discovering bubble opportunities, or (b) to discourage sources from agreeing to any compliance schedule until they had fully examined bubble opportunities.

Today's policy allows an application to be filed though the applicant is not subject to compliance schedules based on original SIP emission limits, so long as that applicant agrees to emission limits established as part of a complete bubble application. Sources which are already subject to binding compliance schedules should, however, be aware that submittal or proposed approval of a bubble application does not suspend their obligation to comply with such schedules. Such schedules and existing SIP requirements remain applicable and enforceable until the bubble is finally approved and the schedule has been modified accordingly.

Sources seeking trades should note that they remain subject to enforcement of existing (pre-trade) SIP limits until the bubble is approved. EPA will use the same principles and procedures for deciding whether to initiate enforcements actions in these circumstances as the Agency applies to any other source which is subject to a proposed SIP revision.

Under established EPA policy, regulated sources must be subject to an applicable enforceable emission limit at all times. Accordingly, sources which have approved bubbles with emission limits effective at future date and which are not in compliance with their pre-trade limits, may be subject to enforcement action, which could include penalties based on a failure to meet the pre-trade limits. Sources in such situations may wish to minimize the chance that capital expenditures will be required to meet pre-trade limits, either by (a) agreeing to post-trade compliance dates which are substantially similar to their pretrade compliance dates, or (b) accelerating their compliance with post-trade limits.

In accord with the general principle that bubbles should be treated neither more nor less stringently than other SIP actions, implementation of today's policy will be neutral with respect to EPA enforcement of pre-trade emission limits. This means that EPA will not specifically target for enforcement action non-compliant sources seeking to use a bubble either to come into compliance or to restructure traditional compliance. However, it also means that EPA will not withhold or defer enforcement simply because a source is seeking alternative emission limits through a bubble. In exercising its enforcement discretion, EPA will apply the same considerations to noncompliant sources which seek to comply through bubbles as to those which do not.[49]

b. Extensions of Compliance Deadlines. States may modify or extend compliance schedules or deadlines for individual sources on a case-by-case basis in conjunction with bubble approvals. Such modifications or extensions must be consistent with the requirements of 40 CFR 51.15. Compliance schedules for sources in *nonattainment* areas cannot be extended beyond the statutory date for attainment, and applicable compliance milestones must be specified and met for each year of the revised or extended compliance schedule. Because an extension will usually require a revision of the state's progress demonstration, such approvals must ordinarily be submitted as SIP revisions.

[49] Parties contemplating bubbles involving the trade of emission reduction credits from one firm to another should be aware that when the credits being provided by the first firm are the result of emission limits with a future compliance date, the obligation to meet pre-trade limits remains with the second firm (which may face enforcement action, including cash penalties, for failure to comply with those pre-trade limits) until the time specified for the first firm to achieve the reductions necessary for compliance under the bubble. The first firm's failure to achieve required bubble reductions on schedule may thereafter result in enforcement action (including cash penalties) against that firm. *However*, this paragraph should be read in conjunction with the general principle articulated above that EPA implementation of today's policy will be neutral with respect to enforcement of pretrade limits.

In nonattainment areas, states which wish to give sources more time to implement bubbles by granting compliance extensions must receive EPA approval of the extension through case-by-case SIP revisions. EPA will evaluate the time extension portions of these SIP revision packages in accordance with the Agency's normal procedures for review of time extensions, including consistency with the Act's requirements of expeditiousness, reasonable further progress, and attainment and maintenance of ambient air quality standards. Sources should be aware that disapproval of the time extension portion may result in disapproval of the entire package (i.e., both post-trade limits and the time extension) or only part of it, depending on whether the state views these components of the proposed SIP revision as severable.

In attainment areas, states may continue to grant compliance extensions without case-by-case SIP revisions, as part of bubble approvals under a generic rule. Such generic compliance date extensions may be granted in these areas only if EPA has approved the extension provision of the generic rule as adequate to comply with the Clean Air Act, including requirements for attainment and maintenance of ambient air quality standards.

c. Pending Enforcement Actions. A bubble cannot be approved for an individual emission source which is presently the subject of a federal enforcement action or outstanding *enforcement* order unless EPA (and where necessary the appropriate court) approves the proposal and any compliance schedule it may contain. "Federal enforcement action or outstanding order" includes notices of violation, civil actions filed under Clean Air Act section 113(b), criminal actions filed under section 113(c), notices imposing noncompliance penalties issued under section 120, administrative orders issued under section 113(a), or citizen suits filed under section 304 in which EPA has intervened if the source is subject to an administrative or judicial order.

This requirement need not preclude bubble approvals under generic rules, provided the rule specifies an appropriate mechanism for securing and recording EPA or court approval.[40] Sources should, however, be aware that such approvals cannot be finally effective until approved by the appropriate agency or court, and that they remain subject to original emission limits until such approval.

C. Banking Emission Reduction Credits

Emission reductions that are surplus, permanent, quantifiable and enforceable can qualify as emission reduction credits (ERCs) and be deposited in EPA-approvable banks. States may establish such banks by adopting appropriate rules to govern whether and how sources may own and hold surplus emission reduction credits for future use in bubble, offset or netting transactions.[41] Such banking rules may encourage sources to take measures to reduce emissions in advance of specific need for ERCs, resulting in lower transaction costs for those seeking offsets, bubbles, or partners for those transactions. States should, however, be aware that because an area's air quality situation or the states of its SIP may change in the future, failure to account for banked credits in emission inventories used for planning purposes may result in loss of those ERCs not treated as "in the air" (e.g., not included in any future SIP inventory or accounted for in any redesignation of the area to attainment), due to double-counting. Banking rules may protect such reductions in whole or in part as long as such protection is consistent with the Act's mandates to attain and maintain ambient standards while protecting PSD increments and visibility.

EPA-approvable banks can accept and evaluate requests to certify an ERC; serve as a clearinghouse for credits on deposit; and account for transfers and withdrawals of ERCs.[42] Banks can place Register ERCs to ensure they are considered as current actual emissions in future planning (thus providing the greatest technical measure of protection to those ERCs); notify prospective purchasers of the existence of ERCs; and account for transfers and withdrawals. These roles will generally be performed by the state as part of its normal permitting activities. *Use* of banked credits must meet all the criteria of the particular SIP regulatory program under which they are to be used.[43]

The following sections address both minimum requirements for state banking rules which are approvable by EPA, and issues states should consider. States may adopt other approaches which produce equivalent results.

1. Banking Rules Must Designate an Administering Agency

Banking rules must identify the entity responsible for specific functions. While the state will ordinarily be responsible for verifying and processing ERC requests, all or part of this responsibility may be delegated to other organizations. Such organization(s) must possess the resources and legal authority to implement delegated activities.

2. Only ERCs May Be Banked

Banked emission reduction credits must be surplus, permanent, quantifiable, and enforceable by the state by the time they are banked.[44] However, if a source commits to produce a specific reduction at a specific time in the future, a state may allow a conditional deposit to be made. Procedures for such conditional deposits must ensure that they do not

[40] See section II.3.3 below.

[41] States may incorporate EPA-approvable banking rules in the SIP by submitting them for approval as SIP revisions.

Emission reductions banked through a formal or informal banking mechanism prior to a state's adoption of EPA-approvable banking rules may qualify for deposit in the EPA-approvable bank so long as (1) the source shows that the reductions are surplus, permanent, quantifiable and enforceable and (2) the state shows that these reductions have not already been assumed or otherwise double-counted in the SIP.

[42] States and sources should be aware that because of differing regulatory requirements, the amount of credit actually derived from particular emission reductions may differ from one regulatory program to another. For example, in primary nonattainment areas meeting but lacking approved demonstrations, the amount of credit from a given reduction which is available for bubble purposes may be less than that available from the same reduction for offset or netting purposes, since special progress requirements apply in bubbles in these areas.

[43] States may, however, expand opportunities for use of banked emissions beyond those of current SIP programs (e.g., extend the "clean experience" period for netting) by submitting revised regulations addressing the banking and use of such credits for approval as SIP revisions.

[44] In primary nonattainment areas which have not been issued approved demonstrations, emission reductions made prior to application to bank or trade (whichever is earlier) will not be creditable for use in bubbles (see section I.A.1.c.(1) above). Following publication of today's notice, the "date of application to bank" will be the earlier the source submits an application to the state to make a reduction state-enforceable through or concurrent with use of a formal bank or unformal banking mechanism (see section I.A.1.b.(1) above).

In other areas, although emission reductions cannot qualify as ERCs or be deposited in EPA-approvable banks until they are made enforceable by the state, contemporaneous reductions banked through other formal or informal banking mechanisms may still be eligible for use in future trades, so long as those reductions are made federally enforceable at the time of use and all applicable requirements of the regulatory program under which they will be used are met. States may have to revise their regulations or permit programs in order to implement this new definition, but as discussed this will not be expected until one year after publication of today's notice. However, all credits for which enforceable orders have been issued during the interim period should ultimately be made enforceable by the effective date of the new regulations, unless today's notice. Emission reductions occurring during the interim period must be made enforceable by the state before expiration thereafter from the time of this policy.

compromise the state's ability to secure through further regulation any future reductions which may be needed.[56] In all cases the reduction must be made federally enforceable by the time the emissions trade which relies upon it is finally approved.

3. *Possible Limitations on Use of ERCs for New Source Permitting*

Use of banked ERCs for new source permitting must be consistent with applicable regulations approved by EPA under 40 CFR Parts 51 and 52. For example, under 40 CFR 51.18(j)(3)(ii)(c) shutdowns that occur prior to applications for a new source permit may ordinarily be used only as offsets for replacement facilities, and then only if the permit application was filed within one year after the shutdown occurred or if the reduction occurred after August 7, 1977.[56]

4. *Sources Should Apply to Bank Surplus Reductions As Soon As They Decide To Make Them*

For administrative simplicity and accurate quantification, sources should apply to bank reductions as soon as possible after they decide to make them. The administering agency should formally note the source's intent to make a surplus reduction, as expressed in the application. The state must then verify whether and to what extent the reduction actually occurred, and must make the reduction enforceable by the time it is accepted for deposit.

5. Procedures for Banking Surplus Emission Reductions Should Be Defined

To speed approval of trades and provide greater certainty for potential ERC creators and users, state banking rules should clearly specify which proposed emission reductions can qualify to be credited and banked, the information required of sources to substantiate their claim for credit, and any required application forms. At minimum, such rules must require firms to maintain records (e.g., production records and records of previous emission tests) adequate to determine the pre- and post-reduction actual and allowable values for emission rate, capacity utilization, and hours of operation for the source generating the ERC.

6. Banking Rules May Establish Ownership Rights

To prevent two entities from claiming or attempting to use the same ERCs at the same time, state banking rules may specify who can own ERCs. For example, while the source creating the ERC will generally be its owner, the state could, as part of its rule, reserve ownership of certain classes of ERCs to itself or local governments. States considering the latter course should carefully weigh whether such reservations are likely to increase or diminish future reductions and air quality management capabilities.

7. Banking Rules Must Establish an ERC Registry or Its Equivalent

An ERC registry or equivalent instrument allows states to track ownership, use, and transfer of all banked ERCs. Banking rules may provide that no transfer of title to a banked ERC will take effect until the transaction is reflected in the registry. This tracking system can minimize potential disputes and provide a central list of certified ERCs which may be available to potential purchasers. It can also provide useful information for quickly evaluating any proposed use of a banked ERC.

Information which may help evaluate future proposed uses of a banked ERC should be recorded at the time of its creation and entered as part of its banking record. This information should include the location of the source creating the ERCs; whether the reduction is due to a shutdown or curtailment; the date the reduction occurred or will occur (to allow future determination of the timing of the reduction with respect to the application for credit or its contemporaneity for use in netting or, if a shutdown, as an offset); the source's stack parameters; the temperature and velocity of its plume; particle size; the existence of any hazardous pollutants; daily and seasonal emission rates; and other data which might reasonably be deemed necessary under the requirements described in sections I.A. and I.B. above to evaluate future use.

To perform these tracking and clearinghouse functions the ERC registry must be accessible to the public. Subject to confidentiality considerations, states should make copies of the ERC registry available at convenient locations and times, and may want to publish or otherwise issue a periodic summary of banked ERCs.

8. Possible Adjustments to ERCs Based on Enforcement Considerations

Banking rules should state what, if any, changes may occur to ERCs after they have been banked. Once an ERC has been used by another source to meet a permit or other regulatory requirement, any violation of the conditions under which that ERC was created should result in enforcement against the source producing that ERC and not the source using it. If a state attempted to enforce against the source using purchased ERCs, a complex set of third-party lawsuits would likely ensue.[57]

9. Possible Adjustments to ERCs Based on Ambient Attainment Considerations

To assure the validity of its demonstration(s) of progress or attainment, a state with a banking rule must assume that all banked emissions will ultimately be used. In evaluating their ability to attain national standards, such states must add to their emissions inventory or measured ambient values all unused banked reductions at the site at which they were created. This is especially important for areas requesting reclassification from nonattainment to attainment. Failure to account for banked reductions as "in the air" for SIP planning purposes would ordinarily eliminate their use as ERCs following a new SIP design or inventory year, due to double-counting.

Additional emission reductions may be required from sources because of their area's failure to attain ambient standards, because of an increment violation, because of existing visibility impairment, or because new RACT requirements are being imposed under a SIP schedule. The existence of banked ERCs must not interfere with states ability to obtain these additional reductions, and a state's rules on treatment of banked ERCs must provide it the necessary flexibility to meet future requirements. However, state banking rules may address, within this criterion, how banked ERCs will be treated if

---

[56] States have several available options to provide such assurance. They may, for example, bar conditional deposits from source categories which are subject to pending regulation. Alternatively, they may allow unrestricted conditional deposits but write future regulations in terms of RACT-equivalent reductions (e.g., an 80% reduction in current actual emissions) rather than in terms of specific control strategies or emission levels. The latter approach can avoid possible claims by some sources that no further control is required, while strengthening the state's ability to encourage further voluntary reductions as well as mandate needed ones. See section I.C.3.b below. States may adopt whichever alternative satisfies these concerns in their particular situation.

[56] See n. 14 above.

[57] Moreover, conflicting private-party attempts to assess ultimate responsibility for required reductions could make the purchased ERCs unenforceable and result in restoration of the creating source's original (higher) emission limits, due to claims that surplus reductions were produced in reliance on government rules implying their reasonable merchantability and use. For these reasons emission limits altered as a result of the creation and use of ERCs must remain final and enforceable against the creator of those ERCs, so far as EPA is concerned.

additional reductions are required to attain and maintain NAAQS, protect PSD increments, or improve visibility. Available options include:

a. ERCs Generated Prior to the Design or Baseline Year Could be Eliminated. The use of ERCs generated prior to the design or baseline year is unlikely to be consistent with the state's demonstration, unless the state included such ERCs as "in the air" for planning purposes at that time.

b. ERCs Could be Guaranteed Against Adjustment. The state would determine the necessary quantity of reductions from individual sources and source categories and require these reductions from actively emitting sources. Banked credits previously created by sources would be fully preserved. Emitting sources could then satisfy new requirements for reductions either by reducing emissions directly or by using or purchasing equivalent ERCs.

In implementing this option, it would be particularly important for states to adjust downward the estimated total reductions due to these new regulatory requirements, in order to reflect reductions previously achieved as a result of banking actions. Alternatively, states could phrase new control requirements in terms of equivalent reduction results (e.g., "RACT-equivalent" reductions in nonattainment areas) as well as specified control techniques or emission levels. Under this approach necessary additional control requirements would be expressly stated in terms of additional reduction responsibilities, to be met without regard to prior trades.[54]

c. Use or Deposit of ERCs Could be Temporarily Suspended. States may suspend either ERC use or future ERC deposits until the state has committed in its SIP to secure reductions sufficient to reestablish progress or cure an increment violation. Use of either type of moratorium would be consistent with air quality objectives while allowing sources to retain and eventually use their entire quantity of banked ERCs. However, these options may be undesirable because of uncertainty regarding the moratorium's start, duration, or potential interference with user planning. This may be especially true where a moratorium on use (rather than deposit) is imposed after ERCs have been banked.

d. Across-the-Board Discounting. Under this option, the state could discount all ERCs in the bank by the *same factor. For example,* if a 10% additional reduction is required from a particular category of sources for the SIP's new demonstration, the state would discount all currently banked ERCs from those types of sources by 10%. Although the quantity of ERCs held by a firm will be reduced, the overall supply of ERCs will decrease, while demand will increase. Indeed, other sources may seek to purchase banked ERCs from creating sources, in order to meet the 10% reductions required of them. Thus, the price per unit of remaining ERCs is likely in many cases to increase.

This option is relatively straightforward for VOC or NO_x. For SO_x or particulate matter more detailed, source-specific modeling would generally be required to allocate the discount necessary to demonstrate attainment.

States may adopt any of these methods of accommodating possible additional reductions. They may also adopt any equivalent method which achieves the same objectives.[55]

II. Trades Covered by State Generic Rules

This section explains how states may develop EPA-approvable generic rules under which classes of emissions trades may be exempt from the general requirement for subsequent EPA approval on case-by-case SIP revisions.

A. General Principles for Evaluating Generic Rules

A generic rule is approvable if it assures that emissions trades otherwise requiring case-by-case SIP revisions under sections 110(a) and 110(a)(2) of the Clean Air Act will be evaluated under state procedures that are sufficiently replicable in operation to guarantee that emissions limits produced under the rule will not interfere with timely ambient attainment and maintenance or jeopardize PSD increments or visibility. Replicability generally means a high likelihood that two decision-makers applying the rule to a given trade would reach the same conclusion. For one example of a generic rule incorporating a very simple formula that meets tests of replicability, see 46 FR 20551 (April 8, 1981). In relation to generic bubble rules, this means that specific modeling procedures or surrogates are prescribed and that states have appropriately defined their choice of models, model inputs, and modeling techniques in applying these procedures to specific trades. Thus these trades should not create new ambient violations of standards or increments, delay the planned removal of existing violations, or degrade visibility in Class I areas. By approving such generic rules, EPA approves in advance an array of acceptable SIP emission limits, and no further SIP revision is required for trades which meet the terms of the state's approved rule.

EPA will comment on trades proposed under generic rules, conduct reviews of trades approved under those rules, and audit the implementation of these rules as part of its routine audits of other state air programs. See Section E below.

B. Scope of Generic Rules

States may use a range of mechanisms to exempt bubble trades from individual SIP revisions. While several general mechanisms are explained below, states may submit other generic rules that satisfy these basic principles. See section II.D below for specific requirements for generic rules in primary nonattainment areas which need but lack approved demonstrations.

1. VOC or NO_x Trades

VOC or NO_x trades approved by states under a generic rule that assures no net increase in applicable baseline emissions may occur without case-by-case SIP revisions.

The ambient impacts of VOC and NO_x emissions are areawide rather than source-specific. All such emissions within a broad area are considered comparable, regardless of plume height, topography or related factors. Thus, the ambient impact of trades involving emissions of VOC or NO_x from different sources within such an area will by definition be equivalent to that of the sum of applicable baseline emission limits for the sources involved in the trade.

For VOC and NO_x, such pound-for-pound trades may therefore be treated under generic rules as equal in ambient effect where all sources involved in the

---

[54] See footnote 55 above.

[55] The preceding discussion generally assumes the bank is lowered in an attainment area or nonattainment area with an approved demonstration. In primary nonattainment areas which need but lack approved demonstrations, use for bubble purposes of banked shutdown or other credits which meet relevant requirements of today's notice will similarly be allowed. See section I.A.1.c.(3) above. Bubbles in these areas will already be subject to special progress requirements. However, in order to accommodate possible additional reduction requirements in other areas in a manner consistent with banks, states may voluntarily adopt such an approach for bubbles prior to the issuance by EPA of any formal notice of SIP deficiency mandating such requirements. States may also choose (as some have already done) to specify greater than 1:1 trading ratios for bubbles, offsets or netting. While this approach would not adjust the total amount of credit available in a bank, it can substantially enhance SIP planning efforts and provide a net air quality benefit by reducing the amount of emissions that can ultimately be returned from the bank to the air.

trade are located in the same control strategy demonstration area, or where replicable procedures have been approved by EPA as part of the generic rule for determining when sources outside the demonstration area are sufficiently close that a pound-for-pound trade can be justified.[60]

In general, generic VOC trading rules must require that surface coating emissions be calculated on a solids-applied basis. The rule should also specify the maximum time period over which emissions may be averaged in an acceptable compliance demonstration. For VOC that averaging time should not exceed 24 hours unless the rule contains language approved by EPA that expressly allows a longer averaging period. See Appendix D below.

2. Particulate, SO_x, CO or Pb Trades

Classes of particulate, SO_x, CO and lead (Pb) trades may also be exempt from SIP revisions if they are approved under a state generic rule which assures that valid ERC uses cannot reasonably interfere with attainment and maintenance of air quality standards or jeopardize PSD increments or visibility.[61]

De Minimis Trades. Trades of particulate, SO_x, CO or lead (Pb) in which applicable net baseline emissions[62] do not increase and in which the sum of the emission increases, looking only at the increasing sources, totals less than 25 tons per year (TPY) for particulates, 40 TPY for sulfur dioxide, 100 TPY for carbon monoxide, or 0.6 TPY for lead (Pb), after applicable control requirements, may proceed without modeling and case-by-case SIP revisions.[63] Such trades will have at most a *de minimis* impact on local air quality because they will produce no net increase in emissions and the amount of emissions being shifted is not significant in ambient effect under associated EPA regulations. See 45 FR 52705 (August 7, 1980).[64]

Level I Trades. The ambient impact of particulate, SO_x, CO or Pb emissions depends on site-specific factors such as topography and plume height which are ordinarily evaluated by ambient dispersion modeling. However, if applicable baseline emissions do not increase, sources are located in the same immediate vicinity, and all other Level I requirements discussed in section I.B.1.b.(2) above are met, it can reasonably be assumed that "pound-for-pound" trades will produce ambient effects equivalent to those which currently approved air quality models would predict. As a result, trades meeting the criteria in section I.B.1.b.(2) above may be treated in the same manner as generic VOC and NO_x trades, and exempted from modeling and case-by-case SIP revisions.

EPA will normally approve generic rules that define "same immediate vicinity" as up to 250 meters between individual emission sources involved in a trade.

Level II Trades. Other particulate, SO_x, CO and Pb trades may also be exempted from case-by-case SIP revisions if they meet the Level II criteria in section I.B.1.b.(3) above and can routinely be modeled in a prescribed manner. The state's generic trading rule must specify the particular refined model that will be employed in a given situation, or criteria for selecting models in specified circumstances. To limit variability in modeling results the rule must also require at least a full year of meteorological data, identify the sites for that data, and specify procedures for selecting input data (e.g., wind speed, stability class, source emission rate) which are sufficiently defined to satisfy replicability concerns.[65] In some limited circumstances, a sufficiently conservative screening model could be specified as part of the generic rule. See section I.B.1.b(3) above.

Level III Trades. Because of the wide variability in data input and use inherent in full-scale dispersion modeling, Level III trades must be processed as individual SIP revisions. But cf. sections II.B.4 and III below.

3. Limitations Trades Exempt From SIP Revisions Under Generic Rules

Because some trades cannot readily be addressed in a replicable manner, the following may *not* in general be exempted under generic rules from the requirement for case-by-case SIP revisions:

a. Particulate, SO_x, CO or Pb trades requiring full-scale dispersion modeling under Level III (see section I.B.1.b.(4) above);

b. Particulate, SO_x, CO or Pb trades where complex terrain[66] is within the area of the source's significant impact or 50 km., whichever is less, unless the trade does not result in a modification of effective stack heights and the trade otherwise qualifies as *de minimis* or Level I. The area of significant impact can be determined as noted in footnote 21 above and in Appendix E;[67]

c. Open dust trades; and

d. Level II trades involving process fugitive particulate, SO_x, CO or Pb emissions not discharged through stacks.[68]

In addition to the above, in order to protect the integrity of various SIP processes, the following types of trades may *not*, in general, be exempted under generic rules from the requirement for case-by-case SIP revisions: (1) Trades involving ERCs from mobile source measures, (2) trades involving emission sources which are the subject of an enforcement action manifested by issuance of a notice of violation, an administrative order or section 120 action, or the filing of a judicial complaint, unless the rule specifies an

---

[60] The discussion in this paragraph does not apply to certain NO_x trades involving visibility impaction due to elevated plumes.

[61] The ambient equivalency considerations elaborated in this and following paragraphs also apply to NO_x trades involving visibility impaction due to elevated plumes. See n. 60 above.

Unlike other criteria pollutants, EPA does not designate nonattainment areas for lead. However, states must review lead trades, as all other trades, to assure that they do not interfere with attainment and maintenance of the NAAQS.

Generic state approvals of trades involving pollutants addressed in this subsection must be limited to sources which are located in the same or adjacent control strategy demonstration areas and the same general air basin.

[62] See n. 31 above.

[63] The *de minimis* level is 40 TPY for NO_x trades where visibility impaction due to elevated plumes is a consideration.

[64] This paragraph should not be construed to imply that *new* sources and modifications need not meet all applicable requirements, including those specified under 40 CFR 51.18 or parallel EPA-approved state rules.

[65] Because today's notice confirms the authority of states to use such EPA-approved refined models as MPTER, CRSTER or ISC to conduct the "daily, temporal, spatial analysis" of post-trade ambient impacts required under Level II, approval of generic rules incorporating Level II approaches should be less uncertain and burdensome than under the previous 1982 approach. See, e.g., Appendix C below.

[66] Complex terrain is broadly defined by EPA as terrain greater in height than the physical stack height of a source. For trades purposes, this definition is applicable only to sources with an increase over baseline emissions.

[67] Generally, aside from the exception stated above, trades involving complex terrain as defined above may not be processed under generic rules. However, states may wish to develop and submit for EPA approval additional area-specific criteria for determining when trades involving complex terrain do not present problems of potential plume impaction, and therefore may be approved under generic rules as *de minimis*. Level I or Level II trades using a flat terrain model. These additional criteria would include such factors as source height and emission rate, distance between stack and elevated features, rate of topographical rise, and other considerations which may be appropriate for a particular geographic area. States are encouraged to work with EPA to determine whether, where and how much additional criteria can be developed and applied within their state. Unless EPA has first acted to approve such additional criteria for a given geographic area as part of a generic rule, states must apply the general restrictions stated above when processing trades in that area under this rule.

[68] See Appendix C.

appropriate mechanism for notifying EPA of the source's bubble application prior to formal state proposal and for securing and recording written EPA concurrence that the bubble meets all pertinent requirements of the generic rule. (3) interstate trades. (4) VOC trades with averaging times longer than 24 hours, unless a state generic rule expressly providing for longer averaging times has been approved by EPA. (5) trades involving work practice and equipment standards, unless a state generic rule containing a provision expressly providing for state evaluation of such trades in a replicable manner has been approved by EPA, and (6) trades involving negotiated RACT baselines. *However*, a state generic trading rule could specify "presumptive RACT" limits which acceptably define generic trading baselines where RACT has not otherwise been defined in the SIP. While RACT baselines different from this presumptive limit could still be used for specific trades, they would need to be approved as case-by-case SIP revisions. Where there is no RACT in the SIP, but EPA has issued a CTG for sources of the type involved in the trade, the CTG should be used as the presumptive RACT component of the generic trading baseline.

To the extent necessary, EPA will issue notices requiring that existing generic rules be revised to reflect these restrictions. See section II.E.4. below.

4. Other Generic Mechanisms for Exempting Particulate, SO_2, CO or Pb Trades From Case-by-Case SIP Revisions

EPA will approve other generic techniques which are demonstrated to equally protect ambient standards, PSD increments, Class I areas, and visibility. For example, a state could approve a modeled formula for two or more specific emission sources which would satisfy ambient concerns while allowing firms to define specific permit limits at each covered emission source. Like other generic provisions, such a formula would have to be approved as part of the SIP. EPA encourages states to work with EPA Regional Offices where they seek to develop other generic mechanisms which meet the tests of replicability and ambient equivalence described above.

C. Enforcing Emission Limits Under Generic Rules

Alternative emission limits approved under generic rules are considered by EPA to be federally enforceable so long as the generic rule specifies the compliance instrument (permit limits, etc.) under which the conditions of the trade will be implemented and all substantive and procedural requirements of the approved rule are met. Generic rules must specify that such alternative limits become applicable requirements of the SIP under § 110 for purposes of sections 113, 120, and 304 of the Clean Air Act and are enforceable in the same manner as other SIP requirements. To assure that EPA and citizens know what emission limits apply, generic rules must also specify that, and in what manner, EPA will be informed of emission limits applicable before and after the trade. (For additional issues related to enforceability, see section I.A.2 above. For requirements related to opportunity for public comment, see section II.F. below).

D. Generic Bubble Rules in Primary Nonattainment Areas Which Lack Approved Demonstrations of Attainment

Generic rules will continue to operate in primary nonattainment areas which require but lack approved demonstrations of attainment, under the following conditions:

1. Bubbles approved under existing generic bubble rules prior to the effective date of today's policy will not be affected by today's requirements.

2. Bubbles submitted to states under existing generic rules may continue to be approved by states in accord with those rules, until such rules are finally changed, pursuant to specific formal EPA request, to meet the criteria listed below. Such rules must, however, as requested by EPA, be modified to meet the criteria below.[69]

3. Applications for new generic bubble rules applicable to these areas, and applications for generic rules now pending before EPA, will be approved provided they meet the criteria below and all other applicable requirements of today's policy.

Criteria for Approvable Generic Bubble Rules. New and revised generic bubble rules applicable to primary nonattainment areas which require but lack approved demonstrations of attainment must, for bubbles in those areas:

a. Use lowest-of-actual-SIP-allowable-or-RACT-allowable emissions baselines for all sources involved in the trade;[70]

b. Using baseline emissions defined above, meet applicable *de minimis* Level I or Level II modeling tests for ambient equivalence, as appropriate;

c. Produce an overall emission reduction from each bubble equal (in percentage terms) to the larger of a 20% reduction in emissions remaining after applicable baselines, or to the overall emission reduction from controllable stationary sources (in percentage terms) needed to attain in the area (i.e., at least equal to the source-by-source emission reductions that would be required for a full demonstration of attainment, taking into account "uncontrollable" area or other stationary sources and expected emission reductions from mobile sources).[71] This determination must be

[69] In the interim, EPA expects states to ensure, so far as feasible, that bubbles approved under existing generic rules are consistent with this policy as well as with the terms of their EPA-approved rules. States should be aware that without this or similar precautions, continued approval of bubbles under existing generic rules containing identified deficiencies may create or accentuate plan deficiencies which may have to be corrected at a later date or compensated for by other means. See section E.4. below.

[70] For detailed discussion of these baselines, see section I.A.1.b. above and Appendix B.

[71] For example, assume air quality analysis indicates the area must decrease its base-year emissions by 46% to attain the relevant NAAQS. Further assume

	TPY
(a) For the base year:	
Uncontrollable stationary source emissions (e.g., residential combustion sources)	2,500
Controllable stationary source emissions	3,500
Mobile source emissions	4,000
Total	10,000
Target emissions for attainment 10,000 × (1.0-0.46)	5,500
(b) For the projected attainment year (before additional controls):	
Uncontrollable stationary source emissions (2,500 × 1.1)	2,750
Controllable stationary source emissions (3,500 × 1.2)	4,200
Mobile source emissions	2,500
Total	9,450

Therefore the reductions needed from controllable stationary sources are 9,450-5,500 = 3,950 TPY

And the percent emission reduction required from controllable stationary sources to attain is

$$\frac{(3950)}{(4200)} \times 100 = 94\%$$

Thus the net overall reduction required from each generic bubble would be 94% (i.e., the reductions produced by applicable baselines (e.g., application of a RACT emission rate) plus whatever percent reduction is analogous remaining after the RACT limit is sufficient to yield the 94% total).

States that wish to avoid SIP revisions for sources for which RACT has not yet been defined in an approved SIP provision may incorporate "presumptive RACT" limits (e.g., 80% reduction for VOC) in their generic rules. Sources would then have the option of accepting these RACT limits for generic bubble purposes, or negotiating different RACT limits through the SIP revisions process. However, where a source involved in a trade is one for which EPA has issued a CTG, but the state has not yet adopted the CTG-specified limit as RACT and no RACT has yet been specified by the state for that source, the presumptive or negotiated RACT limit for the trade must be at least as protective as the CTG for that source.

submitted with the rule, and must use the same type and quality of analysis as that required for an EPA-approvable SIP; and

d. Provide assurances, in conjunction with the State's submittal of the generic rule to EPA, that the state (i) is making reasonable efforts to develop a complete approvable SIP that will achieve the percent emission reduction from controllable sources described in the previous paragraph and (ii) intends to adhere to the schedule for development of such a SIP (including dates for completion of emissions inventory and subsequent increments of progress), as stated in the letter accompanying the submittal or in previous letters. In addition, to ensure that generic approvals continue to complement and do not interfere with attainment planning, EPA will require the state to include the specific assurances listed at section I.A.1.b.(3) above in or with its notices of proposed and final approval of each bubble issued under the generic rule in such a nonattainment area.[73]

E. EPA Oversight of Generic Rules

In order to ensure proper implementation of EPA-approved generic trading rules, EPA intends to (a) examine and comment on, together with any other public commenter, the information provided for individual trades proposed under a generic rule, (b) conduct reviews of individual trades approved under such a rule, and (c) periodically audit the implementation of the generic rule itself.

1. EPA Comment on Trades Proposed Under Generic Rules

When processing emissions trades under generic rules, states are required to provide EPA and the public with adequate notice and opportunity to comment. See sections II.F. and II.G. below. EPA will use state procedures for notice and comment to oversee the implementation of generic rules without delaying state processing of trading applications.

The information which a state must provide to EPA by the first day of the comment period (see section II.G. below) is generally sufficient for EPA to determine that a trading application is being processed properly. Where this information is not sufficient, EPA may request the application itself, and the state must provide it promptly.

Where EPA elects to provide any comments on the proposed approval, it will do so in writing, by the close of the comment period specified in the state's notice. EPA may also testify at any public hearing held pursuant to the approval of a trading application under a generic rule. Trading applicants and state officials are strongly advised to address EPA's comments, and where necessary to incorporate an appropriate response to those comments in the final approval document.[73]

2. Reviews of Individual Bubbles Approved Under Generic Rules

Reviews of individual generic bubble approvals, apart from the regularly scheduled reviews associated with activities under EPA's National Air Audit System (see section II.E.3. below), may be conducted at any time by EPA in order to promptly address identified or suspected problems and to avoid patterns of improper approval or other adverse effects which might accumulate before the next biannual audit is conducted.

3. EPA Audits of the General Implementation of Generic Rules

Under the National Air Audit System, EPA conducts a program audit of each state agency responsible for implementing the SIP and delegated federal programs.[74] These audits are currently carried out on a biannual basis. As part of the National Air Audit System, EPA will conduct an in-depth file audit of a representative sample of generic trading approvals issued by the relevant state.

4. Deficient Generic Trades

As discussed above, generic rules can expedite the approval process for certain classes of emissions trades, because they allow such trades to be approved by states without undergoing a subsequent federal rulemaking process. However, to be considered valid by EPA, a trade approved under a generic rule must:

(1) Be one of a class of trades which within the scope of the generic rule;

(2) Be approved *after* the generic rule has been approved by EPA; and

(3) Meet all the provisions of the generic rule as approved by EPA.

If a state-approved emissions trade does not meet all these requirements it cannot be considered part of the SIP and by definition cannot replace prior valid emission limits in the SIP. See 46 FR 20554–55 (April 6, 1981). Should EPA determine, as a result of its oversight activities, that a state-approved trade is inconsistent with the above requirements, it will notify the state and source in writing and specify any necessary remedial measures. In such circumstances, EPA may take appropriate remedial action to assure attainment and maintenance, including direct enforcement of the original SIP limits.[75]

5. Deficient Generic Rules

Existing generic rules approved under previous EPA policy and guidance may require revision in order to make them consistent with today's final policy. In addition, a generic rule approved by EPA under the final policy may subsequently be found to be deficient in some respect. Because EPA-approved generic rules have independent force of law, they can only be amended upon completion of a formal SIP revision process.

In order to ensure that generic rules are consistent with the Agency's current Emissions Trading Policy, EPA will publish notices in the Federal Register which identify any generic rules requiring formal modification.[76] These notices will identify specific deficiencies and means for correcting them, and will set forth a schedule for submission and review of revised rules. These notices will alert affected states to the danger that continued processing of trades

[73] These four requirements must be included as a contingent provision in all future generic rules, with the contingency triggered to apply to bubbles in primary nonattainment areas which become subject to a SIP call commencing that approved demonstration, after the generic rule was approved.

[73] Lack of EPA comment during the comment period will not bar future appropriate EPA enforcement or rulemaking actions if the bubble is found to be inconsistent with the generic rule.

[74] See, e.g., National Air Audit Guidance for FY 84, Office of Air Quality Planning and Standards, EPA–450/2–83–007 (November 1983).

[75] In some cases EPA may have approved state SIP provisions which meet the Agency's current generic rules, without indicating whether or not those provisions were approved for generic operation. Today's notice does not address the effect of generic validity of such provisions.

[76] EPA's publication of such notices will not trigger special program requirements for case-by-case SIP revision bubbles in areas other than primary nonattainment areas, which remain but in demonstration. Primary nonattainment areas which require but lack demonstrations should already be subject to special program requirements of case-by-case SIP revision bubbles.

under these rules may create or accentuate plan deficiencies which may have to be corrected at a later date or compensated by other means. Where states fail to remedy deficiencies identified in the notice within the prescribed period, EPA may either rescind its previous approval of the rule, or issue a notice of SIP deficiency under section 110(a)(2)(H) of the Act.

F. Public Comment

For emissions trades processed under generic rules, existing state statutes or regulations will generally provide for adequate public notice and opportunity to comment, including opportunity for judicial review sufficient to make comment effective. Under such statutes or regulations, after the state has reviewed a bubble application submitted pursuant to an approved generic rule, a newspaper or similar notice is typically published providing a comment period (usually thirty (30) days) on the proposed decision to approve or disapprove the application. This notice generally informs the public that the proposed approval document (license, order, permit, consent agreement, etc.), the application itself (with the exception of any portion entitled to confidentiality under state or federal law[11], and the technical analysis performed by the state in making its proposed determination, are available for review at specified times and locations. The notice also offers the opportunity for a public hearing.

Under today's policy, the state must also notify the relevant Federal Land Manager if an emissions trade will take place within 100 kilometers of a PSD Class I area. Notification must occur early enough in the review process to allow at least 30 days for the submittal of comments before the trade will be approved by the state.

Where adequate procedures for public notice and comment are not already provided in existing state statutes or regulations, such procedures must be provided as part of an EPA-approved generic rules. In all proposed and final generic bubble actions states must clearly and publicly identify both the pre- and post-trade actual and allowable emissions of each source involved in the trade, so that the ambient effects of each bubble may be known.

To ensure adequate public awareness consistent with § 304 of the Clean Air Act, state generic rules or other existing state laws or regulations must also make publicly available any changes to emission limits which result from trades approved under a generic rule.

G. EPA Notification

In addition to the above requirements for public notice and comment, the generic rule or other state provisions must require that states, by the first day of the public comment period, provide the appropriate EPA Regional Office (see addresses in Appendix A) with a copy of the public notice, the proposed approval document, and the technical analyses performed in evaluating the trading application, together with any summary of those analyses which is available for public review.

State provisions must also require that immediately upon issuance of a final generic trading approval, the state will forward two copies of that document to the relevant EPA Regional Office, and will also submit to EPA any additional documentation which is included in comments or the post-comment record and supports that final state approval.

Any notices issued by EPA to correct notice and comment procedures which do not meet these requirements under current or future generic rules will not trigger special progress requirements or otherwise affect the operation of those rules. Because of the importance of adequate public and EPA notice, affected states should, however, correct deficient notice procedures to the extent practicable, in the interim period before formal rule revisions are submitted and approved.

H. Rulemaking on Generic Rules

EPA will process acceptable generic trading rules for approval as revisions to SIPs as expeditiously as possible. In the interim, states are encouraged to use parallel-processing SIP revision procedures (see 46 FR 44477; Sept. 4, 1981) wherever practical. Trades may not be generically approved by a state until EPA has published a notice of final approval of the generic trading rule in the Federal Register.

III. Trades Not Covered by State Generic Rules

In the absence of a generic rule, states and sources must use case-by-case SIP revisions to effect bubble or external offset trades. Individual trades may also fall outside the scope of an approved generic rule and still be implemented as case-by-case SIP revisions. The principles described in the Policy Statement and this Document will be used to evaluate these emission trades.

Because of the ability of the case-by-case SIP revision process to take account of greater individual variations, many trades which could not be accomplished under a generic rule may nevertheless be approved as case-by-case SIP revisions. Through this SIP revision process, states and sources may also demonstrate that a general principle discussed in Section I above does not apply to their particular circumstances, or that such a principle may be satisfied in other ways.

EPA will make reasonable efforts to take prompt action on SIP trading proposals after a state has ruled on an individual application and submitted it to the Agency. EPA encourages "parallel processing" of such proposals, with EPA and state officials conducting concurrent review so that both agencies can give public notice of proposed action at roughly the same time. EPA can then take final action after the state completes its proceedings, provided the state does not substantially alter the proposal after public notice. EPA will also publish noncontroversial SIP revisions as direct final actions, converting them to proposals only if requests to submit adverse comments are received within 30 days (see generally 46 FR 44477, September 4, 1981). In all bubble actions EPA will clearly identify (or require states to identify, as appropriate) both pre- and post-trade actual and allowable emissions for each source involved in the trade, so that the ambient effects of each bubble may be known.

Appendix A—Regional EPA Emissions Trading Coordinators

Region I: David Conroy (APS-2310), State Air Programs Branch, U.S. Environmental Protection Agency, Region I, John F. Kennedy Federal Building, Boston, Massachusetts 02203, (617) 565-3252; FTS 835-3252

Region II: Betty Martinovich, Air Branch, U.S. Environmental Protection Agency, Region II, 26 Federal Plaza, New York, New York 10007, (212) 264-2517; FTS 264-2517

Region III: Cynthia Stahl, Air Programs Branch, U.S. Environmental Protection Agency, Region III, 841 Chestnut Building, Philadelphia, Pennsylvania 19101, (215) 597-8337; FTS 597-8337

Region IV: Melvin Russell, Air Programs Branch, U.S. Environmental Protection Agency, Region IV, 345 Courtland Street, N.E., Atlanta, Georgia 30308 (404) 257-2864; FTS 257-2864

Region V: Joe Paisie, Air Compliance Branch, U.S. Environmental Protection Agency, Region V, 230 South Dearborn Street, Chicago, Illinois 60604, (312) 886-5777; FTS 886-5777

Region VI: Bill Riddle, Air Program Branch, U.S. Environmental Protections Agency, Region VI, First

[11] The specific pollutants emitted by the source, the amount of those pollutants, and their ambient air impact may not be deemed confidential.

International Building, 1201 Elm Street, Dallas, Texas 75270, (214) 767-9870; FTS 729-9870

Region VII: Charles Whitmore, Air Support Branch, U.S. Environmental Protection Agency, Region VII, 324 East 11th Street, Kansas City, Missouri 64106, (913) 236-2896; FTS 757-2896

Region VIII: Dale Wells, Air Programs Branch, U.S. Environmental Protection Agency, Region VIII, 1860 Lincoln Street, Denver, Colorado 80296, (303) 293-1773; FTS 564-1773

Region IX: Nancy Harney, Air Management Division, U.S. Environmental Protection Agency, Region IX, 215 Fremont Street, San Francisco, California 94105, (415) 974-7858; FTS 454-7858

Region X: David Bray, Air Programs Branch, U.S. Environmental Protection Agency, Region X, 1200 6th Avenue, Seattle, Washington 98101, (206) 442-4253; FTS 399-4253

Appendix B—Definitions of "Actual," "Allowable" and "Baseline" Emissions for Purposes of Emissions Trading

As used in this document with respect to bubbles, a source's "actual" emissions equal its average historical emissions, in tons per year, for the two-year period preceding the source's application to bank or trade emission reduction credit. Another time period may be deemed more representative of typical operations, but the applicant or state must show that actual emissions of such other period are consistent with air quality planning for the area. The definition of "actual emissions" for new source review purposes is somewhat different.[1] See 45 FR 52745 (August 7, 1980); 40 CFR 51.18(j)(1)(xii), 51.24(b)(21), 52.21(b)(21) and 52.24(f)(13).

A sources's "allowable" emissions in tons per year are calculated using the maximum rated capacity of the source (unless the source is subject to federally enforceable operating restrictions) and the most stringent of: (a) A standard applicable under 40 CFR Parts 60 or 61; (b) any applicable SIP emissions limitation, including those with a future compliance date; or (c) an emissions rate set in a federally enforceable permit condition. See 40 CFR 51.18 (j)(1)(xi), 51.24(b)(16), 51.21(b)(16) and 52.24(f)(11). The same definition of "allowable emissions" appears at each of these citations. See also 45 FR 52745 (August 7, 1980).

For bubbles, a source's "baseline" emissions are equal to the product of its (1) *emission rate* ("ER"), specified in terms of mass emission per unit of production or throughput (e.g., pounds SO_2 per million BTU or pounds of VOC per weight of solids applied); (2) *average hourly capacity utilization* ("CU") (e.g., millions of BTU per hour or weight of solids applied per hour); and (3) *number of hours of operation* ("H") during the relevant time period. I.e., baseline emissions = ER x CU x H. Net baseline emissions for a bubble are the sum of the baseline emissions of all sources involved in the trade.

In attainment areas and nonattainment areas with approved demonstrations of attainment, a source's baseline emissions for bubble purposes must generally be determined using the lower of "actual" or "allowable" values for each of the three baseline factors. Actual values for these factors are determined based on the source's average historical values for the factors for the two-year period preceding the source's application to bank or trade emission reduction credits. As discussed above, another time period may be deemed more representative of typical operations, but the emissions for that other period must be shown to be consistent with air quality planning for the area. A source's allowable values for the three baseline factors are determined based on its lowest federally enforceable limit for those factors (i.e., the lowest limit specified in an applicable SIP, PSD or other NSR permit issued under an EPA-approved program, compliance order, or consent decree), including those with a future compliance date.

The actual values for any of the three baseline factors, when higher than corresponding allowable values, may not be used by a source in calculating baseline emissions (i.e., reductions down to compliance levels cannot qualify for emission reduction credit). The allowable values for one or more of these factors, when higher than the corresponding actual values, may be used in calculating bubble baseline emissions for a source only in the following circumstances:

- Where, in a nonattainment or attainment area with an approved demonstration, the applicant shows that the demonstration assumes allowable value(s) for the factor(s) in question. Such a showing must be based on written evidence.
- Where, in an attainment area, the approved demonstration does not assume allowable value(s) for the baseline factor(s) in question, but the applicant performs satisfactory ambient tests to show that the use of such allowable value(s) will not jeopardize attainment and maintenance of NAAQS, PSD increments or visibility. For particulate matter or SO_2, this will require at least a Level II modeling analysis using actual emissions for the pre-trade case.[2] Where such an analysis is submitted to justify allowable values for a case-by-case SIP revision bubble, the Region may require additional technical support if deemed necessary to protect applicable standards or increments. See Section I.B.1.b above.
- Where, in a non-attainment area with an approved demonstration of attainment, the demonstration does not assume allowable value(s) for the baseline factor(s) in question, but the applicant demonstrates through a Level III modeling analysis that the use of such allowable value(s) will not jeopardize attainment and maintenance of NAAQS or PSD increments.
- Where, in an attainment area or a nonattainment area with an approved demonstration, a source has a new source preconstruction permit issued after the PSD baseline date or the base year of the attainment demonstration. In such cases, the applicant may use the value(s) of ER, CU and H upon which the new source permit was approved.

While the Emissions Trading Policy does permit sources to use allowable values for ER, CU and H in determining baseline emissions for bubbles under certain carefully prescribed conditions, the approach taken recognizes that SIP demonstrations are frequently based on a "hybrid" of allowable and actual values, and that bubble baselines in these areas must accurately reflect SIP assumptions for all three baseline factors, or be justified by appropriate modeling, to maintain SIP integrity.

In nonattainment areas needing but lacking approved demonstrations of attainment, sources involved in a bubble must use "lowest-of-actual-SIP-allowable-or-RACT-allowable" emissions baselines. The ER factor for such baselines is based on the actual emission rate, the SIP or other federally enforceable emission limit, or a RACT emission limit, whichever is lower, as of the time of the source's application to bank or trade, whichever is earlier. The CU and H factors for such baselines are based on the lower of actual or

[1] For instance, the calculation of actual emissions for netting purposes is as of the date of the event that brings about the reduction.

[2] Where the PSD baseline has been triggered, and such emissions data is available, the pre-bubble situation for sources which were in existence or commenced construction prior to the PSD baseline date should be modeled using emissions consistent with the PSD baseline concentration as defined in 40 CFR 51.24(b)(13) and 52.21(b)(13). However, emissions and associated parameters may be based on more recent values where past emissions data cannot readily be obtained. For related principles, see section I.A.1.c(1) above.

allowable values for these factors. Actual values for CU and H must be determined using the source's average historical values for the two year period preceding the source's application to bank or trade, unless another two year period is shown to be more representative of typical operations.

For sources which banked or sought to bank credit in these nonattainment areas prior to publication of today's notice, the "date of application to bank" is the date of written application to the state to bank credit through a formal bank or informal banking mechanism for use in future trades. For sources which seek to bank credit in these areas following publication of today's notice, the date of application to bank will be the date of written application to the state to *make a reduction state-enforceable* through or concurrent with use of a formal bank or informal banking mechanism.

Appendix C—Approvable Modeling Approaches

U.S. Environmental Protection Agency

Office of Air, Noise, and Radiation

February 17, 1983.

Memorandum

Subject: Emissions Trading Policy—Technical Clarifications

From: Sheldon Meyers, Director, Office of Air Quality Planning and Standards (ANR-443)

To: Director, Air and Waste Management Division, Regions II–IV, VI–VIII, X; Director, Air Management Division, Regions I, V, IX

The proposed emission trading policy was published on April 7, 1982, in the Federal Register. During the initial implementation of the proposal, numerous emissions trading issues have arisen including several relating to the technical requirements of dispersion modeling and control strategy evaluations. To address these modeling issues, a special workshop was held to solicit recomendations from Regional meteorologists/modelers as well as the various Headquarters technical staff. The Standing Committee on Emissions Trading has also considered these issues and the recommendations of the workshop group.

This memo is intended to outline the results of these meetings and to provide interim guidance. It is effective immediately and will be incorporated into the final Agency policy when promulgated. The following revisions or clarifications on modeling for TSP, CO, and SO_2, are intended to supplement the criteria included in the April 7, 1982, emissions trading policy statement.

Level I Analysis

- To ensure air quality equivalence under *Level I analysis (modeling is not required)*, trades cannot be approved where complex terrain (terrain greater than any stack with increasing emissions) is within the area of significant impact of the source or 50 kilometers, whichever is less.
- Stacks with increasing emissions must be at least good engineering practice (GEP) to prevent downwash.
- Fugitive process and stack sources can be traded under Level I (i.e., process for process, process for stack, and stack for stack) as long as the maximum distance between any emitting points is less than 250 meters. (This is true for trades under generic rules as well as for trades implemented by SIP revisions. The effective stack height requirement in the April policy remains.)
- Since trades involving open dust sources are very difficult to address in a replicable manner, they cannot currently be approved under generic Level I bubble regulations. (Reiteration of April 7, 1982 proposed policy.)

Level II Modeling Analysis

- *In order to satisfy the basic* requirement of the emissions trading policy that trades "must demonstrate ambient equivalence," the maximum change in air quality impact (delta) must be determined when performing a Level II anaylsis. Experience has shown that this requirement is not necessarily met where the April 7 policy says to analyze only the "impact at the receptor of maximum predicted impact after the trade." Therefore, to assure that no degradation of air quality greater than the significance levels would occur at any site, the method of finding the maximum deltas must be determined on both a spatially and temporally consistent basis. This means that you look at each receptor point and determine the change in concentration from the before trade case to the after trade case sequentially for each time period within a full year of meteorological data (time period means the appropriate ambient standard averaging time: e.g., 3-hour, 24-hour, etc.). This appears the most reasonable method of determining ambient equivalence at this time.

Other techniques may be approved where they can be demonstrated to be *equally protective of the standards and* PSD increments. Also, a Level III analysis may be used to supplement those cases where *Level II analysis* shows a few receptors registering deltas greater than the significance values. This limited Level III anaysis would involve only the geographical area containing the high deltas and would include all contributing sources in that area.

- Use of refined models (e.g., MPTER, ISC) with at least one year of meteorological data is *acceptable for a* Level II analysis.
- To ensure replicability, only trades involving process fugitive emission sources vented through stacks can be approved in generic Level II rules unless the State rule specifically identifies actual facilities between which process *fugitive trades would be permitted.* In such cases, the State rule must specify the emission points and all associated and pertinent parameters needed to ensure replicability of modeling results.
- Since trades involving open dust sources are very difficult to address in a replicable manner, they cannot currently be approved under generic Level II bubble regulations. (Reiteration of April 7, 1982 proposed policy.)
- *Trades involving complex terrain* cannot be approved under Level II generic rules; however, approval of such trades through individual SIP reviews are possible under Level II. EPA's experience in processing bubbles for such sources has shown that they are exceedingly difficult to address in a replicable manner. They require a considerable number of judgments and negotiations among Agency personnel concerning the models, data bases, and proper source characterization.
- All national ambient air quality standards (NAAQS) averaging periods, not just the 24-hour, must be considered when performing the air quality equivalence analysis. This is necessary to ensure trades approved under Level II will not have any adverse health and welfare impacts. Therefore, all Level II analyses must test the delta for each receptor site against the following significance levels: TSP—10 $\mu g/m^3$ (24-hour), 5 $\mu g/m^3$ (annual); SO_2—13 $\mu g/m^3$ (24-hour), 46 $\mu g/m^3$ (3-hour), 3 $\mu g/m^3$ (annual); CO—675 $\mu g/m^3$ (8-hour) 2300 $\mu g/m^3$ (1-hour).

Implementation of Changes

Implementation of these changes by the Regional Offices in their negotiations with States and individual sources should begin immediately. If there are any on-going bubble activities where the Regions or States and sources have reached firm agreements which do not comport with these changes, please alert Tom Helms (FTS 629-5525) of my staff. Consideration will be given to situations where the source or State has

already invested significant resources in a good-faith analysis based on prior methods of demonstrating ambient equivalence. If you have specific questions regarding implementation of these policy changes. please call Tom Helms.

cc: Chief. Air Branch. Regions I–X. Meteorologist. Regions I–X. Mike Levin. Joe Tikvart. Darryl Tyler

Appendix D—Approvable Averaging Times for VOC Trades

U.S. Environmental Protection Agency

Office of Air Quality Planning and Standards. Research Triangle Park. North Carolina 27711

January 20. 1984.

Memorandum

Subject: Averaging Times for Compliance With VOC Emission Limits—SIP Revision Policy

From: John R. O'Connor. Acting Director. Office of Air Quality Planning and Standards (MD–10)

To: Director. Air and Waste Management Division. Regions II–IV. VI–VIII. X. Director. Air Management Division. Regions I. V. IX.

The purpose of this memorandum is to clarify the Agency's policy regarding emission time averaging for existing sources of volatile organic compounds (VOC's). Numerous State implementation Plan (SIP) revisions. both broad regulations and source-specific changes. have been submitted which provide for compliance determinations by "time averaging" emissions of VOC for periods exceeding 24 hours. These requests and the following policy on this subject were discussed extensively at a recent meeting attended by those Regional Offices which have the most pending actions (Regions I. III. IV. V); the Office of Air Quality Planning and Standards: and the Office of General Counsel. This policy represents the consensus of the meeting attendees.

The objective of EPA's national VOC emissions control program is the timely attainment and maintenance of the national ambient air quality standard (NAAQS) for ozone. SIP revisions and other regulatory actions relating to VOC control must maintain the integrity of this basic objective. There should be assurances that VOC emission control is reasonably consistent with protecting this short-term ozone standard. Further. since SIP's and associated VOC control programs contemplate the actual application of reasonably available control technology (RACT). regulatory actions that incorporate longer term averages to circumvent the installation of overall RACT level controls cannot be allowed.

Current Agency guidance specifies the use of a daily weighted average for VOC regulations as the preferred alternative where continuous compliance is not feasible. An example might be where a facility operates in a batch manner with multiple lines and various products. Reference is made to the December 8. 1980. Federal Register (copy attached) where can coating operators are allowed to "bubble" several production lines and average emissions over a 24-hour time period.

The preferred daily weighted average alternative may not be feasible in all cases. Where the source operations are such that daily VOC emissions cannot be determined or where the application of RACT for each emission point (line. machine. etc.) is not economically or technically feasible on a daily basis. longer averaging times can be permitted under certain conditions. In determining feasibility. consideration might be given. for example. to the extent to which modifications can be made to testing. inventory. or recordkeeping practices in order to quantify daily emissions. Also. variability or lack of predictability in a source's daily operation might be considered as well as availability of control technology or the physical impediment or restriction to control equipment installation. In order to allow longer than daily averaging in SIP regulations. the following conditions or principles must be honored:

1. Real reductions in actual emissions must be achieved. consistent with the RACT control levels specified in SIP's or the control technique guidelines (CTG's). These limits are typically expressed in terms of VOC per unit of production (a qualitative term such as lbs VOC/gal coating). Where it is not feasible to specify emission limits in such terms. emission limits per unit of time can be approved provided that:

a. The emission limits reflect typical (rather than potential or allowable) production rate and operating hours. These emission limits must truly reflect emissions reductions consistent with RACT and are not simply an artificial constraint on potential emissions. This must be supported in the SIP revision by historical production and operation data.

b. Nonproduction or equipment downtime credits are not allowed in the emission limit calculation unless a Federally enforceable document specifically restricts operation during these times. Such credit must be based on real. historical emissions.

2. Averaging periods must be as as practicable and in no case long than 30 days.

3. A demonstration must be made the use of long-term averaging (greater than 24-hour averaging) will not jeopardize either ambient standards attainment or the reasonable further progress (RFP) plan for the area. This must be accomplished by showing that the maximum *daily* increase in emissions associated with long-term averaging is consistent with the approved ozone SIP for the area.

4. Sources in areas lacking approved SIP's. or in areas with approved SIP's but showing measured violations. cannot be considered for longer term averages until the SIP has been revised demonstrating ambient standards attainment and maintenance of RFP (reflecting the maximum daily emission from the source with long-term averaging).

Meaningful short-term (i.e.. daily) emission caps are desirable especially for sources subject to large fluctuations in emissions. The use of a daily cap (equal to or less than current average emissions on a daily basis) that limits short-term emissions to RACT equivalent levels would meet the above objective of ensuring VOC control is consistent with attaining the NA. for ozone.

States have the primary responsibility to show adherence to the above principles and. to do so. must include the following information (in detail) in all SIP revision requests that seek VOC averaging times greater than 24 hours:

1. The VOC limits specified in an enforceable form with appropriate compliance dates.

2. A description of the affected processes and associated historical production and operating rates.

3. A description of the control techniques to be applied to the affected processes such as low solvent and waterborne coating technology and/or add-on controls.

4. The nature of the emission control program whether a bubble. a regulation change. a compliance schedule. or some other form of alternative control program.

5. The method of recordkeeping and reporting to be employed to demonstrate compliance with the new emission limit requirement and to support the showing that the emission limit is consistent with RFP and the demonstration of attainment.

Each EPA Regional Office shall ha

the primary responsibility for determining the approvability of application requests. However, in order to assure Regional consistency, coordination with the Office of Air Quality Planning and Standards staff is encouraged during the initial development of any single "time average" SIP revision or regulation. Also, all SIP revisions involving long-term averaging must be proposed in the Federal Register with an explanation of how the principles listed above have been satisfied.

Should there be any questions on this policy, please call Tom Helms (FTS 629-5526) or Brock Nicholson (FTS 629-5516).

Attachment

cc:

Barbara Bankoff
Ron Campbell
Jack Farmer
Mike Levin
Ed Reich
B.J. Steigerwald
Darryl Tyler
Peter Wyckoff
Chief, Air Branch, Regions I–X
Regional Administrator, Regions I–X

Appendix E—Radii of Significant Impact for Approving "Complex Terrain" PM, SO_2 and CO Trades Under Level I Modeling Approaches

Appendix E indicates on its vertical axis the post-trade emission rate for the stack with increasing emissions (E), and on its horizontal axis the radius of significant impact (R) within which level I trades may be approved despite the presence of complex terrain outside that radius.

The curves in Appendix E have been generated using a normally conservative screening model, VALLEY, to estimate R for each E, using the 24-hour and 3-hour air quality impact significance level for SO_2 and the 24-hour significance level for particulate matter (PM) which have been established for level II modeling. It was assumed that the short-term standards would be controlling.

The F-stability class was assumed, and wind speed was presumed to be one meter per second for estimating the radius of significant impact for the three-hour period, and 2.5 meters per second for the 24-hour cases. In developing the three-hour curve, it was assumed that F-stability and a wind speed of one meter per second would persist for as much as fourteen consecutive hours. In developing the 24-hour curves, it was assumed that F-stability with a wind speed of 2.5 meters per second would occur for six hours of any 24-hour period.[1]

This Appendix provides different estimates for SO_2 and PM because the significance levels for these pollutants are different. For CO, the R value for E value may be determined by multiplying the E for SO_2 by twenty (20). This is a conservative approach towards determining radii of significant impact for CO. Where the effective height of the stack with increasing emissions is not changed (e.g., where the only change is in the sulfur content of fuel burned), the change in the hourly emission rate (E) may be used in lieu of E."

BILLING CODE 6560-50-M

[1] The curves in Appendix E were derived using the assumptions described above so that they could be used to determine radii of significant impact for sources in any part of the country. However, it is possible that for some areas, local meteorological conditions will be such that alternative, less conservative meteorological assumptions can be employed in determining these radii. Where states can show that the use of such alternative assumptions is appropriate for a given area, they develop alternative curves or formulas for determining radii of significant impact and submit them for review and approval by EPA, either in connection with an individual bubble submittal or as part of a generic rule. States are advised to work closely with the appropriate Regional Office in any effort to develop such alternative approaches.

FIGURE I:

Radii of Significant Impact for PM & SO_2 for Different Averaging Times

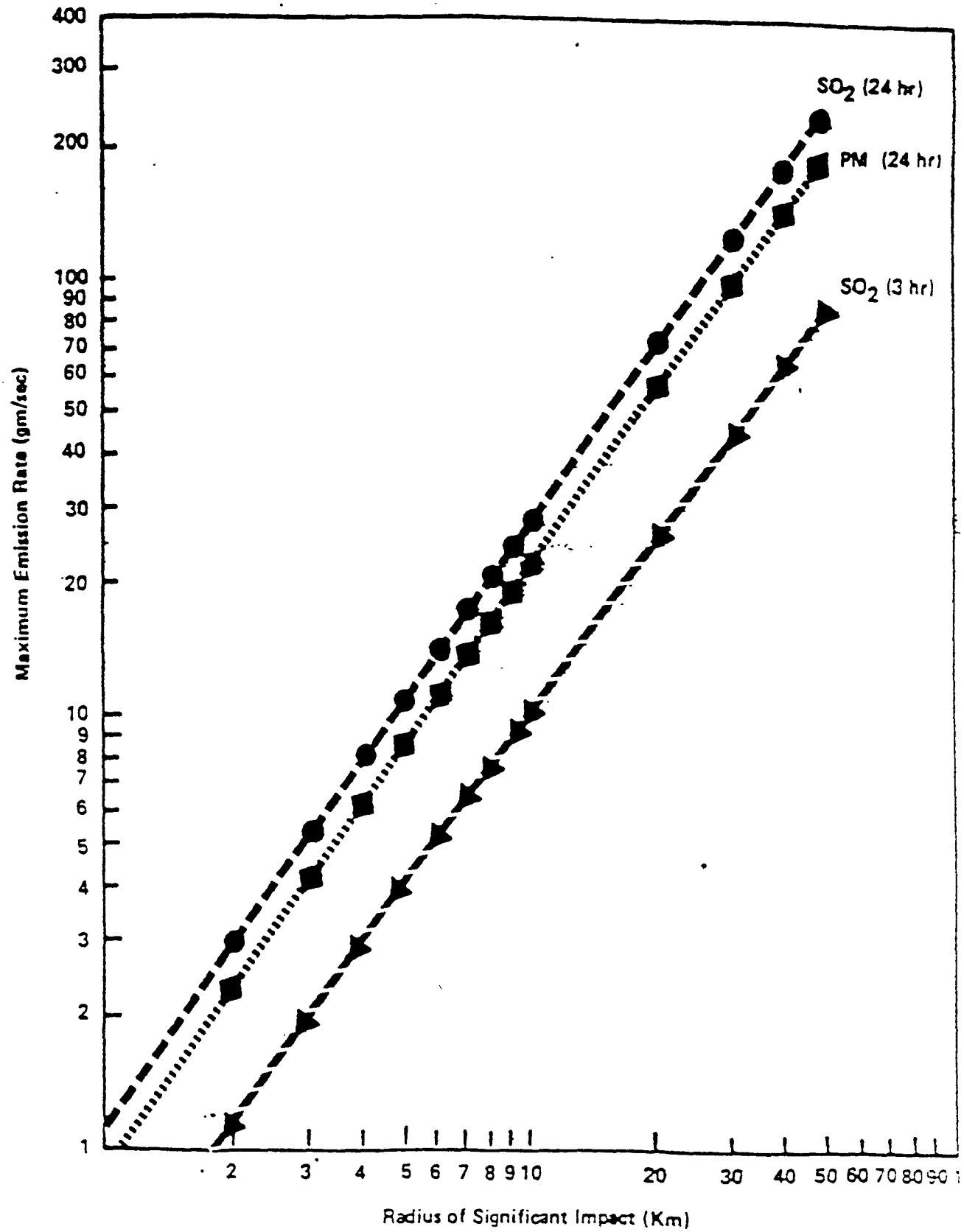

BILLING CODE 6560-50-C

Appendix F—CFR Part 51 Conversion Table

On November 7, 1986 (51 FR 40656) EPA restructured CFR Part 51 and renumbered many of that part's sections. Because most readers will be more familiar with prior designations, today's notice contains citations based on Part 51 as it existed before this restructuring. A detailed finding list of the old versus new citations can be found in Table 2 of the Preamble of the November 7 notice. Today's readers may also use the following table to convert today's Part 51 citations to the corresponding new ones.

CFR Part 51 Conversion Table

Old 40 CFR 51 Citation	*New 40 CFR 51 Citation*
51.18	Subpart I
51.18(j)	51.165(a)
51.18(j)(1)(vi)	51.165(a)(1)(vi)
51.18(j)(1)(x)	51.165(a)(1)(x)
51.18(j)(1)(xi)	51.165(a)(1)(xi)
51.18(j)(1)(xii)	51.165(a)(1)(xii)
51.18(j)(3)(ii)(c)	51.165(a)(3)(ii)(C)
51.18(k)	51.165(b)
51.22	51.287
51.24	51.166
51.24(b)(3)(b)(ii)	51.166(b)(3)(b)(ii)
51.24(b)(13)	51.166(b)(13)
51.24(b)(13)(ii)	51.166(b)(13)(ii)
51.24(b)(16)	51.166(b)(16)
51.24(b)(21)	51.166(b)(21)
51.24(b)(23)	51.166(b)(23)

[FR Doc. 86-27082 Filed 12-3-86; 8:45 am]

BILLING CODE 6560-50-M

UNITED STATES ENVIRONMENTAL PROTECTION AGENCY
Office of Air Quality Planning and Standards
Research Triangle Park, North Carolina 27711

APR 7 1987

MEMORANDUM

SUBJECT: Wyoming--Definition of Ambient Air

FROM: Darryl D. Tyler, Director
Control Programs Development Division (MD-15)

TO: Irwin Dickstein, Director
Air and Toxics Division, Region VIII

This memorandum confirms and clarifies our recent conversation on Wyoming's proposed change to their definition of ambient air. After our conversation, my staff further reviewed the proposal and your office's assessment of it. While we agree with the final position you take--viz., opposition to the change--my staff believes that several other points should be made in comments to Wyoming.

1. In Christine Phillips' memorandum of March 20, 1987, two reasons are given to oppose the revision. While we agree with the thrust of the first reason (ineffectiveness of exterior fencing to exclude public access because of the public highway and towns in the enclosed area), there may be a problem in boldly stating the second reason. We have never either flatly stated that land acquisition in general is acceptable or unacceptable under section 123 of the Clean Air Act. As the memorandum points out, the December 19, 1980, letter from Douglas Costle to the Honorable Jennings Randolph indicates that we will review individual situations on a case-by-case basis. Therefore, I believe we should not automatically categorize land acquisition as proposed in Wyoming as a dispersion technique prohibited by section 123, although further analysis may in fact lead us to that conclusion. In at least two instances, we have tolerated land acquisition to "contain" modeled violations of national ambient air quality standards. We have, however, avoided formulating criteria for acceptability of land acquisition, although such criteria (such as size of area and relevance to operation) were at one time considered.

PN 110-87-04-30-082

UNITED STATES ENVIRONMENTAL PROTECTION AGENCY
Office of Air Quality Planning and Standards
Research Triangle Park, North Carolina 27711

3 0 APR 1987

MEMORANDUM

SUBJECT: Ambient Air

FROM: G. T. Helms, Chief
Controlled Programs Operations Branch (MD-15)

TO: Bruce Miller, Chief
Air Programs Branch, Region IV

My staff and I have discussed the five situations involving the definition of ambient air that you sent on December 18, 1986. The following comments represent our interpretation of the ambient air policy. However, this memorandum is not a discussion of the technical issues involved in the placement of receptors for modeling. Our comments on each scenario follow:

Scenario One: We agree with you that the road and the unfenced property are ambient air and could be locations for the controlling receptor.

Scenario Two: We agree with your determination in this case also.

Scenario Three: We agree with you that the road is ambient air. However, Area B is not ambient air; it is land owned or controlled by the company and to which public access is precluded by a fence or other physical boundary.

Scenario Four: We do not think that any of the barriers mentioned here are sufficient to preclude public access so as to allow the source to dispense with a fence. An example of an unfenced boundary that would qualify is a property line along a river that is clearly posted and regularly patrolled by security guards. Any area, such as grassy areas that might even remotely be used by the public, would have to be fenced even in this situation. We would not think that a drainage ditch would meet these criteria.

Scenario Five: Both fenced pieces of plant property, even though noncontiguous, would not be considered ambient air (see Scenario Three). The road, of course, would be ambient air. Again, ownership and/or control of the property and public access are the keys to ambient air determination.

I hope that these comments are helpful to you and your staff. This memorandum was also reviewed by the Office of General Counsel. Please call me if you have any comments.

cc: S. Schneeberg
P. Wyckoff
R. Rhoads
D. Stonefield
Air Branch Chiefs, Regions I-X

UNITED STATES ENVIRONMENTAL PROTECTION AGENCY
Office of Air Quality Planning and Standards
Research Triangle Park, North Carolina 27711

3 [illegible] 1987

MEMORANDUM

SUBJECT: Ambient Air

FROM: G. T. Helms, Chief
Control Programs Operations Branch (MD-15)

TO: Steve Rothblatt, Chief
Air Branch, Region V

My staff and I have discussed the five ambient air cases which you submitted for our review on January 16, 1987. The following comments are our interpretation of the ambient air policy . However, this memorandum is not a discussion of the technical issues involved in the placement of receptors for modeling.

Our comments on each of the cases follow:

Case 1 (Dakota County, MN): This case involves two noncontiguous pieces of fenced property owned by the same source, divided by a public road. We agree that the road is clearly ambient air and that both fenced pieces of plant property are not.

Case 2 (Warrick County, IN): This case involves two large sources on both sides of the Ohio River. We agree that receptors should be located over the river since this is a public waterway, not controlled by the sources. We also agree that the river does indeed form a sufficient natural boundary/barrier and that fencing is not necessary, since the policy requires a fence or other physical barrier. However, some conditions must be met. The riverbank must be clearly posted and regularly patrolled by plant security. It must be very clear that the area is not public. Any areas where there is any question--i.e., grassy areas, etc.--should be fenced and marked, even if there is only a very remote possibility that the public would attempt to use this property.

However, we also feel that current policy requires that receptors should be placed in ALCOA and SIGECO property for modeling the contribution of each source's emissions to the other's ambient air. Thus, ALCOA's property--regardless of whether it is fenced--is still "ambient air" in relation to SIGECO's emissions and vice-versa.

Case 3 (Wayne County, MI): This case involves the air over the Detroit River, the Rouge River and the Short-cut Canal. We agree that the air over all three of these is ambient air, since none of the companies owns them or controls public access to them. Note, however, that one source's property--regardless of whether it is fenced--is the "ambient air" relative to another source's emissions.

Case 4 (Cuyahoga County, OH): This case involves LTV Steel's iron and steel mill located on both sides of the Cuyahoga River.

We do not feel that LTV Steel "controls" the river traffic in that area sufficiently to exclude the public from the river, whether it be recreational or industrial traffic. The fact that there is little or no recreational traffic in that area is not sufficient to say that all river traffic there is LTV traffic. The public also includes other industrial users of the river that are not associated with LTV.

It is difficult to tell from the map whether the railroad line is a through line or not. If the railroad yard serves only the plant then it would not be ambient air but the railroad entrance to the plant would have to be clearly marked and patrolled. However, if the line is a through line then that would be ambient air. We would need additional information to make a final determination.

The unfenced river boundaries should meet the same criteria as in Case 2 above.

Case 5 (involves the placement of receptors on another source's fenced-property): As mentioned above in Case 2, we feel that present policy does require that receptors be placed over another source's property to measure the contribution of the outside source to its neighbor's ambient air. To reiterate, Plant A's property is considered "ambient air" in relation to Plant B's emissions.

I hope that these comments are helpful to you and your staff. This memorandum was also reviewed by the Office of General Counsel.

cc: S. Schneeberg
P. Wyckoff
R. Rhoads
D. Stonefield
Air Branch Chiefs, Region I-X

112

Federal Register

Wednesday
July 1, 1987

Part III

Environmental Protection Agency

40 CFR Parts 51, 52, 53 and 58

Ambient Air Quality Standards for Particulate Matter; Final Rules

40 CFR Parts 50 and 52

Air Programs; Fugitive Dust Policy and Review of National Secondary Ambient Air Quality Standards for Particulate Matter; Proposed Policy Statement and Notice of Proposed Rulemaking

ENVIRONMENTAL PROTECTION AGENCY

40 CFR Part 50

[AD-FRL 3141-6(a)]

Revisions to the National Ambient Air Quality Standards for Particulate Matter

AGENCY: Environmental Protection Agency (EPA).

ACTION: Final rule.

SUMMARY: In 1971, EPA promulgated primary and secondary national ambient air quality standards for particulate matter, measured as "total suspended particulate matter" or "TSP." The primary standards were set at 260 $\mu g/m^3$, 24-hour average not to be exceeded more than once per year, and 75 $\mu g/m^3$, annual geometric mean. The secondary standard, also measured as TSP, was set at 150 $\mu g/m^3$, 24-hour average not to be exceeded more than once per year. In accordance with sections 108 and 109 of the Clean Air Act, EPA has reviewed and revised the health and welfare criteria upon which these primary and secondary particulate matter standards were based.

On March 20, 1984 (49 FR 10408), EPA proposed changes in the standards based on its review and revision of the criteria. Today's notice announces EPA's final decisions regarding these changes. The final decisions include: (1) replacing TSP as the indicator for particulate matter for the ambient standards with a new indicator that includes only those particles with an aerodynamic diameter less than or equal to a nominal 10 micrometers (PM_{10}), (2) replacing the 24-hour primary TSP standard with a 24-hour PM_{10} standard of 150 $\mu g/m^3$ with no more than one expected exceedance per year; (3) replacing the annual primary TSP standard with a PM_{10} standard of 50 $\mu g/m^3$, expected annual arithmetic mean; and (4) replacing the secondary TSP standard with 24-hour and annual PM_{10} standards that are identical in all respects to the primary standards.

Today's notice also announces a new Federal Reference Method for measurement of PM_{10} in the ambient air. The method is contained in a new Appendix J to Part 50. This notice also announces a new Appendix K to Part 50, which provides rules for applying the statistical form of the revised standards. In addition, certain clarifying changes to Appendix B and Appendix G are set out.

Related notices published elsewhere in today's Federal Register set out final regulations concerning Ambient Air Monitoring Reference and Equivalent Methods (40 CFR Part 53), Ambient Air Quality Surveillance (40 CFR Part 58), Regulations for Implementing Revised Particulate Matter Standards (40 CFR Part 51) with associated guidelines, Approval and Promulgation of Implementation Plans (40 CFR Part 52), and Prevention of Significant Deterioration (Parts 51 and 52).

EFFECTIVE DATE: This action is effective July 31, 1987.

ADDRESSES: A docket (No. A-82-37) containing information related to EPA's review and revision of the particulate matter standards is available for public inspection between 8:00 a.m. and 3:00 p.m. on weekdays at EPA's Central Docket Section, South Conference Center, Room 4, 401 M St., SW., Washington, DC. A reasonable fee may be charged for copying. The information in the docket constitutes the complete basis for the decisions announced in this notice. For the availability of related information see SUPPLEMENTARY INFORMATION.

FOR FURTHER INFORMATION CONTACT: Mr. John Haines, Strategies and Air Standards Division (MD-12), U.S. Environmental Protection Agency, Research Triangle Park, N.C. 27711, telephone (919) 541-5531 (FTS 629-5531).

SUPPLEMENTARY INFORMATION:

Availability of Related Information

The revised criteria document, Air Quality Criteria for Particulate Matter and Sulfur Oxides (three volumes, EPA-600/8-82-029af-cf, December, 1982: Volume I NTIS #PB-84-120401, $24.95 paper copy and $6.50 microfiche; Volume II NTIS #PB-84-120419, $48.95 paper copy and $6.50 microfiche; Volume III NTIS #PB-84-120427, $48.95 paper copy and $13.50 microfiche, the Second Addendum to Air Quality Criteria for Particulate Matter and Sulfur Oxides (1982): Assessment of Newly Available Health Effects Information, (EPA/600/8-86-020F, NTIS #PB-87-178574, $24.95 paper copy and $6.50 microfiche), the 1982 staff paper, Review of the National Ambient Air Quality Standards for Particulate Matter: Assessment of Scientific and Technical Information-OAQPS Staff Paper (EPA-450/5-82-001, January, 1982; NTIS #PB-82-177874, $24.95 paper copy and $6.50 microfiche), and the staff paper addendum, Review of the National Ambient Air Quality Standards for Particulate Matter: Updated Assessment of Scientific and Technical Information (EPA-450/ 5-86-012, December 1986; NTIS #PB-87-176871, $18.95 paper copy and $6.50 microfiche) are available from: U.S. Department of Commerce, National Technical Information Service, 5285 Port Royal Road, Springfield, Virginia 22161 (add $3.00 handling charge per order). A limited number of copies of other documents generated in connection with this standard review, such as the control techniques document, can be obtained from: U.S. Environmental Protection Agency Library (MD-35), Research Triangle Park, N.C. 27711, telephone (919) 541-2777 (FTS 629-2777).

Table of Contents

I. Background
- A. Legislative Requirements Affecting This Rule
  - 1. The Standards
  - 2. Related Control Requirements
- B. Particulate Matter and Original Standards for TSP
- C. Development of Revised Air Quality Criteria for Particulate Matter
- D. Review of the Standards: Development of Staff Paper
- E. Proposed Revisions to the Standards
- F. Supplemental Criteria Revisions and Standards Review Following Proposal

II. Summary of Public Comments
- A. Comments on 1984 Proposal
- B. Comments on Subsequent Notice

III. Rationale for the Primary Standards
- A. Pollutant Indicator
- B. Averaging Time and Form of the Standards
  - 1. 24-hour Standard
  - 2. Annual Standard
- C. Level of the Standards
  - 1. 24-hour Standard
  - 2. Annual Standard

IV. Rationale for the Secondary Standards
- A. Soiling and Nuisance
- B. Other Welfare Effects

V. Federal Reference Method
- A. Specific Changes to Appendix J
- B. Designation of Reference Methods for PM_{10}
- C. Technical Change to Appendix G

VI. Summary of Salient Public Comments and Agency Responses
- A. Health Effects Criteria and Selection of the Primary Standards
  - 1. Indicator for the Primary Standards
  - 2. Interpretation of Community Epidemiological Studies
  - 3. Margin of Safety
- B. Secondary Standards
  - 1. Soiling and Nuisance
  - 2. Visibility
- C. Averaging Time and Form of the Standards
  - 1. Expected Exceedances for the 24-hour Standard
  - 2. Expected Arithmetic Mean for the Annual Standard

VII. Regulatory and Environmental Impacts
- A. Regulatory Impact Analyses
- B. Impact on Small Entities

VIII. Other Reviews

References

Addendum I—CASAC Review and Closure of the 1982 Criteria Document for Particulate Matter/Sulfur Oxides and the 1986 Second Addendum to the Criteria Document

Addendum II—CASAC Review and Closure of the 1982 OAQPS Staff Paper for Particulate Matter and the 1986 Addendum to the Staff Paper
Addendum III—Executive Summary of the 1986 Addendum to the Staff Paper
Part 50—National Primary and Secondary Ambient Air Quality Standards
Appendix J—Reference Method for the Determination of Particulate Matter as PM_{10} in the Atmosphere
Appendix K—Interpretation of the National Ambient Air Quality Standards for Particulate Matter

I. Background

A. Legislative Requirements Affecting This Rule

1. The Standards

Two sections of the Clean Air Act govern the establishment and revision of national ambient air quality standards (NAAQS). Section 108 [42 U.S.C. 7408] directs the Administrator to identify pollutants which may reasonably be anticipated to endanger public health or welfare and to issue air quality criteria for them. These air quality criteria are to reflect the latest scientific information useful in indicating the kind and extent of all identifiable effects on public health or welfare that may be expected from the presence of a pollutant in the ambient air.

Section 109 [42 U.S.C. 7409] directs the Administrator to propose and promulgate "primary" and "secondary" NAAQS for pollutants identified under section 108. Section 109(b)(1) defines a primary standard as one the attainment and maintenance of which, in the judgment of the Administrator, based on the criteria and allowing for an adequate margin of safety, is requisite to protect the public health. A secondary standard, as defined in section 109(b)(2), must specify a level of air quality the attainment and maintenance of which, in the judgment of the Administrator, based on the criteria, is requisite to protect the public welfare from any known or anticipated adverse effects associated with the presence of the pollutant in the ambient air. Welfare effects are defined in section 302(h) [42 U.S.C. 7602(h)] to include effects on soils, water, crops, vegetation, man-made materials, animals, wildlife, weather, visibility, climate, damage to and deterioration of property, hazards to transportation, and effects on economic values and on personal comfort and well-being.

The U.S. Court of Appeals for the D.C. Circuit has held that the requirement for an adequate margin of safety for primary standards was intended to address uncertainties associated with inconclusive scientific and technical information available at the time of standard setting. It was also intended to provide a reasonable degree of protection against hazards that research has not yet identified. *Lead Industries Association v. EPA*, 647 F.2d 1130, 1154 (D.C. Cir. 1980); *cert. denied*, 101 S. Ct. 621 (1980); *American Petroleum Institute v. Costle*, 665 F.2d 1176, 1177 (D.C. Cir. 1981), *cert. denied*, 102 S. Ct. 1737 (1982). Both kinds of uncertainties are components of the risk associated with pollution at levels below those at which human health effects can be said to occur with reasonable scientific certainty. Thus, by selecting primary standards that provide an adequate margin of safety, the Administrator is seeking not only to prevent pollution levels that have been demonstrated to be harmful, but also to prevent lower pollutant levels that he finds pose an unacceptable risk of harm, even if that risk is not precisely identified as to nature or degree.

In selecting a margin of safety, EPA has considered such factors as the nature and severity of the health effects involved, the size of the sensitive population(s) at risk, and the kind and degree of the uncertainties that must be addressed. Given that the "margin of safety" requirement by definition only comes into play where no conclusive showing of harm exists, such factors, which involve unknown or only partially quantified risks, have their inherent limits as guides to action. The selection of any particular approach to providing an adequate margin of safety is a policy choice left specifically to the Administrator's judgment. *Lead Industries Association v. EPA*, *supra*, 647 F.2d at 1161–62.

Section 109(d) of the Act [42 U.S.C. 7409(d)] requires periodic review and, if appropriate, revision of existing criteria and standards. The process by which EPA has reviewed the original criteria and standards for particulate matter under section 109(d) is described in Sections I.C. and I.D. of this notice.

2. Related Control Requirements

States are primarily responsible for ensuring attainment and maintenance of ambient air quality standards once EPA has established them. Under section 110 of the Act [42 U.S.C. 7410], States are to submit, for EPA approval, State implementation plans (SIPs) that provide for the attainment and maintenance of such standards through control programs directed to sources of the pollutants involved. Other Federal programs provide for nationwide reductions in emissions of these and other air pollutants through the Federal Motor Vehicle Control Program under Title II of the Act [42 U.S.C. 7501 to 7534], which involves controls for automobile, truck, bus, motorcycle, and aircraft emissions, and through the development of New Source Performance Standards under section 111 [42 U.S.C. 7411] and National Emission Standards for Hazardous Air Pollutants under section 112 [42 U.S.C. 7412].

B. Particulate Matter and Original Standards for TSP

"Particulate matter" is the generic term for a broad class of chemically and physically diverse substances that exist as discrete particles (liquid droplets or solids) over a wide range of sizes. Particles originate from a variety of stationary and mobile sources. They may be emitted directly or formed in the atmosphere by transformations of gaseous emissions such as sulfur oxides, nitrogen oxides, and volatile organic substances. The chemical and physical properties of particulate matter vary greatly with time, region, meteorology and source category, thus complicating the assessment of health and welfare effects. The characteristics, origins, concentrations, and potential effects of particulate matter are discussed in more detail in the staff paper (SP) (EPA, 1982a), in the revised criteria document (CD) (EPA, 1982b), in the criteria document addendum (CDA) (EPA, 1986a) and in the staff paper addendum (SPA) (EPA, 1986b). The executive summary of the staff paper addendum is reprinted in Addendum III to this notice.

On April 30, 1971 (36 FR 8186), EPA promulgated the original primary and secondary NAAQS for particulate matter under section 109 of the Clean Air Act. The reference method for measuring attainment of these standards is the "high-volume" sampler (40 CFR Part 50, Appendix B), which collects particulate matter up to a nominal size of 25 to 45 micrometers (μm) (so-called "total suspended particulate," or "TSP"). Thus, TSP is the current indicator for the particulate matter standards. The existing primary standards for particulate matter (measured as TSP) are 260 $\mu g/m^3$, 24-hour average not to be exceeded more than once per year, and 75 $\mu g/m^3$, annual geometric mean. The secondary standard (measured as TSP) is 150 $\mu g/m^3$, 24-hour average not to be exceeded more than once per year. The scientific and technical bases for these standards are contained in the original criteria document, Air Quality Criteria for Particulate Matter (DHEW, 1969).

C. Development of Revised Air Quality Criteria for Particulate Matter

In 1978, as a result of internal Agency review and the recommendations of a committee of EPA's Science Advisory Board, EPA decided to revise the existing criteria document for particulate matter. Because of competing priorities regarding revision of other criteria documents, and because of the need to complete additional research on particulate matter, the process was scheduled to commence in 1979. With the endorsement of the Clean Air Scientific Advisory Committee (CASAC) of EPA's Science Advisory Board, EPA decided to review and revise the criteria document for particulate matter concurrently with that for sulfur oxides and to produce a combined particulate matter/sulfur oxides (PM/SO_x) criteria document. On October 2, 1979 (44 FR 56731), EPA announced that it was in the process of revising the criteria document and reviewing the existing air quality standards for possible revisions.

In developing the revised criteria document, EPA has provided a number of opportunities for review and comment by organizations and individuals outside the Agency. Three drafts of the revised particulate matter/sulfur oxides criteria document, prepared by EPA's Environmental Criteria and Assessment Office (ECAO), were made available for external review on April 11, 1980 (45 FR 24913), January 29, 1981 (46 FR 9746), and October 28, 1981 (46 FR 53210). EPA received and considered numerous and often extensive comments on each of these drafts. CASAC held three public meetings to review successive drafts of the document on August 20–22, 1980 (45 FR 5164, August 4, 1980), July 7–9, 1981 (46 FR 31746, June 17, 1981), and November 16–18, 1981 (46 FR 53210, October 28, 1981). These meetings were open to the public and were attended by many individuals and representatives of organizations who provided critical reviews and new information for consideration. In accordance with CASAC recommendations made after the first review meeting, five additional public meetings were held at which EPA, its consulting authors and reviewers, and other scientifically and technically qualified experts selected by EPA discussed the various chapters of the draft document and suggested ways of resolving outstanding issues (45 FR 74047, November 7, 1980; 45 FR 76224, November 25, 1980; 45 FR 76790, November 20, 1980; 45 FR 80350, December 4, 1980; 46 FR 1775, January 7, 1981).

The comments received on the successive drafts of the revised criteria document were considered in the final document, issued simultaneously with the proposal of revisions to the standards. A summary of EPA's responses to the comments on the three external review drafts of the documents is in the public docket (Docket No. A–82–37). Transcripts of the three CASAC meetings are also in the docket. In accordance with its established procedures, CASAC prepared a "closure" memorandum to the Administrator indicating its satisfaction with the final draft (December, 1981) of the criteria document and outlining key issues and recommendations. The closure memorandum, dated January 29, 1982, stated that the EPA office that prepared this document was "responsive to Committee advice as well as to comments provided by the general public . . ." The closure memorandum further stated that the criteria document "fulfills the requirements set forth in section 108 of the Clean Air Act, which requires that the criteria document 'shall accurately reflect the latest scientific knowledge useful in indicating the kind and extent of all identifiable effects on public health or welfare' from sulfur oxides and particulates in the ambient air." The CASAC closure memorandum on the criteria document is reprinted in its entirety in Addendum I to this notice. Following closure, minor technical and editorial refinements were made to the criteria document for printing (EPA, 1982b).

A number of scientific and technical issues were raised during the public review process. With respect to the particulate matter portions of the criteria document, the major issues included the relationship among various measures of particulate matter air quality, the implications of particle deposition and other studies for selecting a particulate matter indicator, and the development and application of criteria for deciding which epidemiological studies are most appropriate for use in revising air quality standards. A summary of these and other major scientific issues, as well as CASAC's conclusions, is included in the closure memorandum on the criteria document (Addendum I).

D. Review of the Standards: Development of Staff Paper

In the evolving process of revising the national ambient air quality standards, EPA has found it useful to prepare a document that helps bridge the gap between the scientific review of health and welfare effects contained in the criteria document and the judgments required of the Administrator in setting ambient standards. This document, known as the staff paper, has become an important element in the standards review process, providing an opportunity for public comment on proposed staff recommendations before they are presented to the Administrator.

In the spring of 1981, EPA's Office of Air Quality Planning and Standards (OAQPS) prepared the first draft of the staff paper, Review of the National Ambient Air Quality Standards for Particulate Matter: Assessment of Scientific and Technical Information. This draft staff paper, based on the then existent draft of the revised criteria document, evaluated and interpreted the available scientific and technical information most relevant to the review of the air quality standards for particulate matter and presented staff recommendations on alternative approaches to revising the standards. This and a second draft of the paper were reviewed at two CASAC meetings on July 7–8, 1981 (46 FR 31746, June 17, 1981), and November 16–18, 1981 (46 FR 53210, October 28, 1981). Numerous written and oral comments were received on the drafts from CASAC, representatives of organizations, individual scientists, and other interested members of the public. A summary of major revisions made in response to comments on the first draft is contained in an October 31, 1981 letter to CASAC (Padgett, 1981). Following the second CASAC meeting, the staff made further revisions in response to comments and prepared an executive summary that was reviewed by CASAC members before preparation of the closure memorandum on the staff paper. In January, 1982, EPA released the final OAQPS staff paper (EPA, 1982a), which reflects the various suggestions made by CASAC and members of the public. The January 29, 1982, CASAC closure memorandum states that the staff paper "has been modified in accordance with recommendations made by CASAC," is consistent with the criteria document, and provides the Administrator "with the kind and amount of technical guidance that will be needed to make appropriate revisions to the standard." This closure memorandum is reprinted in Addendum II to this notice.

A number of major issues were raised during the public review process. The more important issues are outlined below.

1. Substantial discussion concerned the maximum size of particles (or particle size fraction) to be used in measuring particulate matter for regulatory purposes. Some groups favored retaining TSP as an indicator,

others called for alternative size-specific standards with nominal "size cuts" ("D_{ae}"; see discussion in Section III.A.) of 15 μm, 10 Gāmm, 5–7 Gāmm, and 2.5 Gāmm. After CASAC closure on the staff paper and criteria document, comments were received from one group favoring a so-called "D_b" of 10 μm (approximately equivalent to a nominal size cut [D_{ae}] of 6 μm).

2. Much attention was focused on selecting the level of the primary standards and on the question of which health effects studies were most appropriate for this purpose. Significant criticisms were received on the major epidemiological studies of particulate matter exposures, highlighting their limitations for use in standard setting. In a number of comments, specific suggestions for standards were made.

3. With respect to secondary standards, most attention focused on the possible need for a fine (≤2.5 Gām) particle standard designed to protect visibility.

These and other major issues are discussed more fully in the executive summary of the staff paper and in later sections of this notice. CASAC's discussion of these issues and its recommendations are contained in the closure memorandum on the staff paper (Addendum II).

E. Proposed Revisions to the Standards

On March 20, 1984 (49 FR 10408) EPA proposed a number of revisions to the primary and secondary particulate matter standards. The proposed revisions, based on the revised criteria, included:

(1) Replacing TSP as the indicator for particulate matter for the primary standards with a new indicator that includes only those particles with an aerodynamic diameter less than or equal to a nominal 10 micrometers (PM_{10});

(2) Changing the level of the 24-hour primary standard to a value to be selected from a range of 150 to 250 μg/m³ and replacing the deterministic form of the standard, which permitted not more than one observed exceedance of the standard per year, with a statistical form that would permit one expected exceedance per year;

(3) Changing the level of the annual primary standard to a value to be selected from a range of 50 to 65 μg/m³, and changing the form from an annual geometric mean to an expected annual arithmetic mean; and

(4) Replacing the current 24-hour secondary TSP standard by an annual TSP standard selected from a range of 70 to 90 μg/m³, expected annual arithmetic mean.

The Administrator expressed an inclination to select the primary standards from the lower portions of the above ranges. With respect to the secondary standards, the Administrator was inclined to select the final standard from the upper portion of the range, but also called for comment on the alternative of using PM_{10} as the particulate matter indicator for the secondary standards and making the secondary standards identical in all respects to the primary standards. The proposal notice sets forth the rationale for these and other proposed revisions of the particulate matter NAAQS and background information related to the proposal.

F. Supplemental Criteria Revisions and Standards Review Following Proposal

Following publication of the proposal, EPA held a public meeting in Washington, D.C. on April 30, 1984 to receive comments on the proposed standards revisions. A transcript of the meeting has been placed in the public docket (Docket No. A–82–37). After the close of the original public comment period (June 5, 1985), the CASAC met on December 16–17, 1985 to review the proposal and to discuss the relevance of certain new scientific studies on the health effects of particulate matter that had emerged since the Committee completed its review of the criteria document and staff paper in January, 1982. A transcript of this meeting is also available in the Docket. Based on its preliminary review of these new studies, the Committee recommended that the Agency prepare separate addenda to the criteria document and staff paper for the purpose of evaluating the relevant new studies and discussing their potential implications for standard-setting. The Agency announced its acceptance of these recommendations on April 1, 1986 (51 FR 11058). On July 3, 1986, EPA announced (51 FR 24392) the availability of the external review draft document entitled: Second Addendum to Air Quality Criteria for Particulate Matter and Sulfur Oxides (1982): Assessment of Newly Available Health Effects Information. At the same time, the Agency announced a supplementary comment period on the March 20, 1984 proposal to provide the public an opportunity to comment on the implications of the new studies and addenda for the final standards. On September 16, 1986, EPA announced (51 FR 32878) the availability of the draft staff paper addendum entitled Review of the National Ambient Air Quality Standards for Particulate Matter: Updated Assessment of Scientific and Technical Information. CASAC held a public meeting on October 15–16, 1986 to review both the criteria document addendum and the staff paper addendum. At this meeting, CASAC members as well as representatives of several organizations, provided critical review of both EPA documents. A transcript of the CASAC meeting has been placed in the public docket (A–82–37).

The CASAC sent a closure letter on the criteria document addendum to the Administrator dated December 15, 1986, which concludes "that this 1986 Addendum along with the 1982 Criteria Document, previously reviewed by CASAC, represent a scientifically balanced and defensible summary of the extensive scientific literature on these pollutants" (Lippmann, 1986b). The closure letter on the criteria document addendum is reprinted in Addendum I of this notice. The Committee sent their closure letter on the staff paper addendum to the Administrator dated December 18, 1986, stating "The Committee believes that this document provides you with the kind and amount of technical guidance that will be needed to make appropriate revisions to the standards" (Lippmann, 1986c). The closure letter on the staff paper addendum, which also discusses major issues addressed by the CASAC and the Committee's recommendations concerning these issues, is reprinted in Addendum II to this notice. The final addenda to the criteria document (EPA, 1986a) and the staff paper (EPA, 1986b), which include revisions to reflect comments from CASAC and the public, are available from the address listed above. Where there are differences between the 1982 Criteria Document and staff paper and the more recent addenda, the addenda supersede the earlier document. The executive summary of the staff paper addendum is reprinted in Addendum III to this notice.

II. Summary of Public Comments

The following discussion summarizes in general terms the comments received from the public and from governmental agencies regarding the proposed revisions to the indicator, form, averaging times, and levels of the primary and secondary standards. Many of these comments had been made previously by the public during public deliberations on drafts of the criteria document and staff paper and were reviewed and addressed by EPA in revisions to those documents. Salient comments on all aspects of the proposal and Agency responses to those comments are summarized by category in Section VI of this notice. A more

detailed description of individual comments and Agency responses has been entered in the public docket (No. A–82–37).

A. Comments on 1984 Proposal

Extensive written comments were received during the original comment period on the proposal, which closed June 5, 1985. Of some 312 written submissions, 153 were provided by individual industrial concerns or industry groups, 93 by State, local, and Federal government agencies and organizations, 32 by environmental and public interest groups, and 34 by individual private citizens.[1] The comments on the key elements of the proposed standards are summarized below:

(1) *Indicator for the Primary Standard:* The overwhelming majority of the comments received on this issue favored a size-selective indicator for the PM standard. Of the 147 written comments received on this issue, 108 supported the PM_{10} indicator proposed by the Agency. Most of the remaining comments were in support of alternative smaller particle size indicators including PM_4 (28 comments) and $PM_{2.5}$ (8 comments). The principal support for PM_4 came from mining and related industries.

(2) *Levels of the Primary Standards:* Comments on the proposed levels for the two primary standards were more polarized than those on the indicator. Most industry comments favored selecting the level of the standards at the upper end of the proposed ranges or above, while most of the remaining commenters favored standard levels at the lower bound of the ranges, and in some cases lower. Additional comments from individual citizens, environmental groups, and government agencies urged that the level of protection afforded by the current particulate matter standards be maintained or strengthened.

(3) *Secondary Standards:* Of the 106 written comments received on the proposed secondary standard, 44 supported retaining TSP as the indicator and 61 opposed the use of TSP. Most of the latter commenters supported the proposed alternative of making the secondary standards equal in all respects to the primary standards. Industry commenters were virtually unanimous in opposing a TSP secondary standard, while a majority (35 of 47) of government agency comments on this issued favored retaining the TSP indicator. Some of the latter commenters, however, recommended testing attainment of the TSP standard with PM_{10} monitors. Environmental groups commenting on this issue favored retaining the TSP indicator.

(4) *Form of the Standards:* A majority of the 52 comments received on this subject supported some kind of statistical 24-hour standard, but a number of industry and State and local agency commenters raised concerns with aspects of the specific form proposed. The principal concern was that the proposed form could result in misclassification of areas as non-attainment. Some industry and governmental commenters favored alternative forms for the 24-hour standards including multiple exceedance (9 comments) and percentile (8 comments) forms. These forms would permit five or more exceedances per year of the 24-hour standard. Environmental groups and other government agencies opposed multiple exceedance forms. Of 38 submissions from industry and government agencies, 26 favored a geometric mean for the annual standard over the proposed arithmetic mean.

(5) *Federal Reference Method:* While most of the comments generally supported the performance-based approach to the Federal Reference Method, many commenters favored more stringent specifications for PM_{10} samplers to ensure accurate and reliable performance under all ambient sampling conditions. Other comments and recommendations addressed specific requirements of Appendix J such as flow calibration and measurement, flow regulation, filter media, humidity control and sampler maintenance.

B. Comments on Subsequent Notice

As discussed earlier in this notice, EPA announced an additional public comment period on July 3, 1986 to address the implications of new scientific studies on the health effects of particulate matter [51 FR 24392]. Approximately 20 additional written submissions were received by the close of this comment period on November 17, 1986, 17 of which were provided on behalf of industry groups or companies, 2 from environmental groups, and 1 from a state agency. Much of the material related to evaluations of specific studies and their treatment in the staff paper addendum. The industry comments, which included submissions from consulting scientists and analysts, generally found that the new studies suffered from deficiencies that preclude placing much weight on them in standard setting. These commenters concluded that their original recommendations (summarized above) with respect to the standards remained valid. The two environmental groups felt that the findings in these new studies necessitated standards below the lower bounds of the proposed ranges.

III. Rationale for the Primary Standards

In selecting primary standards for particulate matter, the Administrator must specify: (1) the particle size fraction that is to be used as an indicator of particulate pollution; (2) the appropriate averaging times and form(s) of the standards; and (3) the numerical levels of the standards. These specifications must be considered collectively in evaluating the margin of safety afforded by particulate matter standards. Based on the assessment of relevant scientific and technical information in the criteria document and addendum, the staff paper and staff paper addendum (hereinafter "SP" and "SPA," respectively) outline a number of key factors to be considered in making decisions in each of these areas (SP, Section VI; SPA, Section IV). Both the staff and CASAC made recommendations to focus consideration on a discrete range of options. In most respects, the Administrator has adopted the recommendations and supporting reasons contained in the staff paper and addendum and the CASAC closure statements (Friedlander, 1982; Lippmann, 1986c). Rather than reiterating those discussions at length, the following discussion of the standards revisions focuses primarily on those considerations that were most influential in the Administrator's selection of particular options, or that differ in some respect from considerations that influenced the staff and/or CASAC recommendations.

A. Pollutant Indicator

Based on the staff assessment of the available scientific information, EPA concludes that (1) a separate particulate matter standard (as opposed to a combination standard for particulate matter and SO_2) remains a reasonable public health policy choice, and (2) given current scientific knowledge and uncertainties, a size-specific (rather than chemical-specific) indicator should be used. In assessing the information in the criteria document, the staff reached several conclusions summarized here (see SP, pp. 71–73):

[1] This numerical distribution of comments in each category should be compared with caution. For example, the American Iron and Steel Institute and the American Petroleum Institute submitted comments on behalf of 61 and 230 individual companies respectively, in lieu of having each of their member companies send separate comments. Similarly, comments from interest groups such as NRDC represent the views of a number of individuals.

(1) Health risks posed by inhaled particles are influenced both by the penetration and deposition of particles in the various regions of the respiratory tract, and by the biological responses to these deposited materials. Smaller particles penetrate furthest in the respiratory tract. The largest particles are deposited in the extrathoracic (head) region with somewhat smaller particles depositing in the tracheobronchial region. Still smaller particles can reach the deepest portion of the lung, the alveolar region.

(2) The risks of adverse health effects associated with deposition of typical ambient fine and coarse particles [8] in the thorax (tracheobronchial and alveolar regions of the respiratory tract) are markedly greater than those associated with deposition in the extrathoracic (head) region. Maximum particle penetration to the thoracic region occurs during oronasal or mouth breathing.

(3) The size-specific indicator for primary standards should represent those particles small enough to penetrate to the thoracic region (both the tracheobronchial and alveolar regions). The risks of adverse health effects from extrathoracic deposition of typical ambient particulate matter are sufficiently low that particles depositing only in that region can safely be excluded from the indicator.

Considering these conclusions together with other information on air quality composition, respiratory tract deposition and health effects, the need to provide protection for sensitive individuals who may breathe by mouth and/or oronasally, and the similar convention on particles penetrating the thoracic region recently adopted by the International Standards Organization (ISO, 1981), the staff recommended that the size-specific indicator include particles of diameters less than or equal to a nominal 10 μm "cut point."[9] The factors considered in the original staff recommendations for a 10 μm cut point are outlined in the staff paper (SP, pp. 75–79). This indicator is referred to as "thoracic particles" (TP) in the 1982 staff paper; it is now generally referred to as "PM_{10}." Such an indicator is conservative with respect to health protection in that it includes all of the particles small enough to penetrate to the sensitive alveolar region, and includes approximately the same proportion of larger particles as would be expected to reach the tracheobronchial region. It places substantially greater emphasis on controlling smaller particles than does a TSP indicator, but does not completely exclude larger particles from all control.

The assessment of more recent information on respiratory tract deposition in the criteria document and staff paper addenda reinforces the conclusions reached in the original staff assessment. In particular, the staff paper addendum found that: (1) the recent data do not provide support for an indicator that excludes all particles larger than 10 μm in diameter; [10] (2) the analysis used to support an alternative indicator with a nominal size cut of 6 GSmm (Swift and Proctor, 1982) significantly underestimated thoracic deposition of particles larger than 6 μm in diameter under natural breathing conditions; (3) the PM_{10} indicator generally includes a similar or larger fraction of the range of particles that can deposit in the tracheobronchial region, although it appears to be somewhat less conservative in this regard than previously thought with respect to large (G8<10 μm) particle deposition under conditions of natural mouthbreathing; and (4) the studies of tracheobronchial deposition generally involved adult subjects; recent information indicating even greater tracheobronchial deposition of particles in children than in adults provides an additional reason for an indicator that includes particles capable of penetration to the tracheobronchial region (SPA, p. 36). Consideration of these and the earlier conclusions led the staff to reaffirm its recommendation for a PM_{10} indicator (SPA, pp. 36–37). The CASAC also restated its recommendation for PM_{10} in its review of the proposal and the closure letter to the Administrator (Lippmann, 1986 a, c).

The Administrator accepts the recommendations of the staff and CASAC and their underlying rationale and has decided to replace TSP as the particle indicator for the primary standards with a new indicator that includes only those particles less than a nominal 10 μm in diameter, as specified in the Federal Reference Method (Appendix J to 40 CFR Part 50) being promulgated today. In defining the standards for particulate matter, this new indicator is termed PM_{10}.

B. Averaging Time and Form of the Standards

Few comments on the proposed standards contested the need for both 24-hour and annual primary standards for particulate matter. EPA's assessment of more recent scientific information found that the new data confirm the need for both short- and long-term standards. The alternative of a single averaging time would not provide adequate protection against potential effects from both long- and short-term exposures without being unduly restrictive. The forms for the 24-hour and annual standards are discussed below.

1. 24-hour Standard

EPA proposed that the 24-hour standard be stated in a statistical form that uses more than one year of data and accounts for variations in sampling frequency in order to predict the actual number of exceedances to be expected in an average year. When used with an appropriate standard level, the statistical form can provide improved health protection that is less sensitive to changes in sampling frequency than the deterministic form, and also can offer a more stable target for control programs. Recognition of the limitations of the deterministic form has led EPA to promulgate a statistical form for the ozone standard (44 FR 8202).

The interpretation of the statistical form of the particulate matter standard is detailed in Appendix K of the proposed regulation. The standard would be attained when the expected number of exceedances of the 24-hour standard level is no more than one per year. The expected number of exceedances per year is equivalent to the long-term average number of exceedances per year, assuming no changes in underlying emissions. Generally, the determination of the expected number of exceedance will be based on three consecutive years of data.

As a result of EPA's evaluations of evidence submitted and comments received during the public review process, the following changes have

---

[8] Particles in ambient air usually occur in two somewhat overlapping size distributions, fine (diameter less than 2.5 μm) and coarse (diameter larger than 2.5 μm). The two size fractions tend to have different origins and composition (SP, Appendix D).

[9] The more precise term is 50% cut point or 50% diameter (D_{50}). This is the aerodynamic particle diameter for which the efficiency of particle collection is 50%. Larger particles are not excluded altogether, but are collected with substantially decreasing efficiency and smaller particles are collected with increasing (up to 100%) efficiency. Ambient samplers with this cut point provide a reliable estimate of the total mass of suspended particulate matter of aerodynamic size less than or equal to 10 μm. See additional discussion regarding the Federal Reference Method in section V below and in the accompanying notice revising 40 CFR Part 53.

[10] The American Mining Congress (AMC, 1987) had recommended such an indicator, with a "D_{50}" of 20 μm. EPA estimated that the "D_{50}" of this indicator would be 6 μm.

been made to Appendix K of the proposed rule regarding:

(1) Data Capture Requirements—Appendix K to the proposed standards contained minimum data capture requirements for determining attainment of the standards. The amount of data required varies with the sampling frequency and the number of years of record. The Ambient Air Quality Surveillance regulations (40 CFR Part 58) proposed in 1984 and being promulgated today require that sampling be performed every day or every other day in areas where there is a substantial probability of nonattainment of the standards. The proposed Appendix K to the standards, however, would have permitted states to demonstrate attainment of the standards with only 12 samples per calendar quarter, even in those areas where everyday or every other day sampling is required. Commenters have argued that, for the same reasons that everyday or every other day sampling is required in areas with a substantial probability of nonattainment, 12 samples per quarter are not sufficient to establish attainment in those areas. These commenters also argued that 75 percent data capture is achievable at all sampling frequencies. EPA agrees, and therefore the final rule requires that 75 percent of the required samples must be captured each calendar quarter to establish attainment of the NAAQS.

Additional criteria for situations in which less than 3 years of representative data are available are also contained in the final rule. These criteria are intended to permit areas to determine their air quality status in a reasonable time frame during the period in which new PM_{10} monitoring is initiated, while minimizing the probability of errors in classification. Appendix K specifies that the various data requirements do not apply when the data available establishes nonattainment unambiguously. Furthermore, data not meeting the various criteria may also be sufficient to show attainment; however, such exceptions will have to be approved by the Regional Administrator in accordance with established guidance.

(2) Exceedance Calculations—EPA is modifying the formulas used to account for incomplete data in the estimation of the expected number of exceedances per year. In the proposal, these calculations were based on the assumption that the fraction of missing values that would have exceeded the standard level is identical to the fraction of measured values above that level for the entire calendar year. In the final rule, these calculations will be required on a quarterly basis, thereby taking into account possible seasonal differences in exceedance rates as well as differences in sampling frequency or data capture. The estimated annual number of exceedances is defined as the sum of the estimated exceedances for each calendar quarter. This change will accommodate situations in which sampling frequency has been increased to everyday according to the requirements of Part 58.13, and situations in which the Regional Administrator has granted a waiver of increased sampling frequency requirements for part of the calendar year under provisions of those monitoring regulations.

(3) Interpretation of the First Observed Exceedance—EPA is additionally modifying Appendix K with respect to the treatment of the first observed exceedance in order to reduce the chance of misjudging attainment status. Under the aforementioned formulas which adjust for incomplete data, a single observed exceedance could cause a site to fail the test for attainment, even if the true expected number of exceedances is less than or equal to one. Such an occurrence is especially likely if sampling is performed less frequently than everyday. In order to reduce the chances of occurrence of this situation, the final rule contains a provision that the first observed exceedance shall not be adjusted for incomplete sampling if (1) everyday sampling had not been required previously by 40 CFR 58.13, (2) there was only one observed exceedance in the calendar quarter, and (3) sampling frequency has been subsequently increased for the next 4 calendar quarters in accordance with 40 CFR 58.13. The associated reduction in misclassification errors is discussed in "Revising the National Ambient Air Quality Standards for Particulate Matter—A Selective Sampling Monitoring Strategy" which has been placed in the public docket.

With this change, the first observed exceedance can be interpreted as the only true exceedance which has occurred in the calendar quarter. This assumption is believed to be reasonable since incomplete sampling is permitted only in areas for which state implementation plans are not initially required and in areas in which maximum PM_{10} concentrations are estimated to be less than 80 percent of the level of the standard. If an area is truly in nonattainment, additional exceedances would be expected during the subsequent year of everyday sampling. If, however, everyday sampling is not initiated as required by the monitoring regulations, all observed exceedances shall be adjusted for incomplete sampling and accordingly considered in the evaluation of PM_{10} air quality status.

2. Annual Standard

The Administrator has decided to change the form of the annual standard from the current annual geometric mean to a statistical form expressed as an expected annual arithmetic mean. The expected annual arithmetic mean is equivalent to the long-term arithmetic average concentration level, assuming no changes in underlying emissions. The expected arithmetic mean is more directly related to the available health effects information than is the annual geometric mean, which is the current form of the standard. Because the arithmetic mean concentration is proportional to the sum of the daily means, it reflects the total cumulative dose of particulate matter to which an individual is exposed. Therefore, it is an appropriate indicator to protect against any health effect that depends on total dose. It is also a reasonable indicator for protecting against health effects that depend on repeated short-term high concentrations; short-term peaks have an influence on the arithmetic mean that is proportional to their frequency, magnitude, and duration. The geometric mean, on the other hand, deemphasizes the effect of short-term peak concentrations, and is heavily influenced by days of relatively clean air. For these reasons, the staff and CASAC recommended the change to an arithmetic mean.

The interpretation of the statistical form of the standard is detailed in Appendix K to the proposed regulation. Under the statistical form, the expected annual arithmetic average is determined by averaging the annual arithmetic averages from three successive years of data. The current deterministic form of the standard does not adequately take into account the random nature of meteorological variations. In general, annual mean particulate matter concentrations will vary from one year to the next, even if emissions remain constant, due to the random nature of meteorological conditions that affect the formation and dispersion of particles in the atmosphere. If only one year of data is considered, compliance with the standard and, consequently, emission control requirements, may be determined on the basis of a year with unusually adverse or unusually favorable weather conditions. The

problem of year-to-year variability is, however, reduced by averaging three years of data.

C. Level of the Standards

The original staff paper and CASAC recommendations set forth a framework for determining the levels for the proposed particulate matter standards that would protect public health with an adequate margin of safety. The discussion that follows relies heavily on that framework and on the supporting material in the staff paper and its addendum as well as the CASAC closure letters. The essential steps in this framework are summarized here.

1. Assessment of the quantitative epidemiological studies.

The criteria document and its addendum identify a small number of community epidemiological studies that are useful in determining concentrations at which particulate matter is likely to affect public health. The staff used these quantitative studies to examine concentration-response relationships and to develop numerical "ranges of interest" for possible PM_{10} standards.

A number of uncertainties associated with use of these studies must be considered in selecting an appropriate margin of safety. As discussed in the staff paper and the criteria document, and the addenda to those documents, epidemiological studies are generally limited in sensitivity and subject to inherent difficulties involving confounding variables. Moreover, many of the quantitative studies were conducted in times and places where pollutant composition may have varied considerably from current U.S. atmospheres. Most also have used British Smoke [5] or TSP as particle indicators. None of the published studies used the proposed PM_{10} indicator. Thus, assumptions must be used to convert the various results to common (PM_{10}) units (SP, pp. 96–100; SPA pp. 9–11).

2. Identification of additional margin of safety considerations.

The criteria document identifies an additional substantial body of scientific literature that, while not providing reliable concentration-response relationships for ambient exposures, does provide important qualitative insights into the health risks associated with human exposure to particles. This literature includes both quantitative and qualitative epidemiological studies, controlled human exposure experiments, and animal toxicological studies. The staff assessed this literature to identify additional factors and uncertainties that should be considered in selecting the most appropriate margin of safety (SP, pp. 100–101; 107–111, SPA pp. 52–53; 59).

3. Selection of the levels that might be considered to provide an adequate margin of safety.

The intent of the margin of safety requirement was to direct the Administrator to set air quality standards at pollution levels below those at which adverse health effects have been found or might be expected to occur in sensitive groups. Experience with the requirement has shown that the scientific data are often so inconclusive that it is difficult to identify with confidence the lowest pollution level at which an adverse effect will occur. Moreover, in cases such as the present one, the evidence suggests that there is a continuum of effects, with the risk, incidence, or severity of harm decreasing, but not necessarily vanishing, as the level of pollution is decreased.

In the absence of clearly identified thresholds for health effects, the selection of a standard that provides an adequate margin of safety requires an exercise of informed judgment by the Administrator. The level selected will depend on the expected incidence and severity of the potential effects and on the size of the population at risk, as well as on the degree of scientific certainty that the effects will in fact occur at ar given level of pollution. For example, suspected but uncertain health effec severe and the size of the population risk is large, a more cautious approac will be appropriate than would be if t effect were less troubling or the expo population smaller.

EPA staff originally recommended a range of potential standards for the Administrator's consideration (SP, pp 111–114). The recommended range wa below the levels at which the staff, w the concurrence of CASAC, had concluded from the available data tha adverse health effects were "likely," i in the domain where the data suggest that such effects were "possible." The Administrator proposed refined range of standard levels that were based on the original staff and CASAC recommendations. After consideratior of the new scientific evidence contain in the criteria document addendum, th staff revised its recommendations for ranges of standards (SPA, pp. 60–62). The Administrator has considered the revised assessments and the recommendations of CASAC (Lippmar 1986b) in making his final decision on the standard levels. The rationales for the levels of the 24-hour and annual standards are presented below.

1. 24-Hour Standard

The revised staff assessment of the short-term epidemiological data is summarized in Table 1; particulate matter levels are expressed in both the original (British Smoke ["BS"] or TSP) and PM_{10} units. The "effects likely" row in Table 1 denotes concentration ranges derived from the criteria document and its addendum at or above which a consensus judgment suggests greatest certainty that the effects studied would occur, at least under the conditions that occurred in the original studies. In the "effects possible" range, the staff found credible scientific evidence suggesting the existence of adverse health effects in sensitive populations, but substantial uncertainty exists regarding the conclusions to be drawn from such evidence.

[5] British Smoke (BS) is a pseudo-mass indicator related to small particle (aerodynamic diameter less than a nominal 4.5 μm) darkness. This particulate matter indicator was widely used in British and other European studies. See the criteria document for a more detailed treatment of BS (CD, pp. 1–88 to 1–90 and 14–8 to 14–11).

TABLE 1.—UPDATED STAFF ASSESSMENT OF SHORT-TERM EPIDEMIOLOGICAL STUDIES

(After Table 4–1, SPA)

Effects/Study	Measured British smoke levels (as μg/m³) (24-hr. avg.)			Measured TSP levels (μg/m³) (24/hr. avg.)	Equivalent PM_{10} Levels (μg/m³)
	Daily Mortality in London [1]	Aggravation of bronchitis [2]	Combined range	Small, reversible declines in lung function in children [3, 4]	Combine range [5]
Effects Likely	1000	250–"500"	250–500		350–600
Effects Possible	?	<250"	<250	220"–420 [3]—200–250 [4]	140–350

TABLE 1.—UPDATED STAFF ASSESSMENT OF SHORT-TERM EPIDEMIOLOGICAL STUDIES—Continued

(After Table 4-1, SPA)

Effects/Study	Measured British smoke levels (as $\mu g/m^3$) (24-hr. avg.)			Measured TSP levels ($\mu g/m^3$) (24-hr. avg.)	Equivalent PM_{10} Levels ($\mu g/m^3$)
	Daily Mortality in London [1]	Aggravation of Bronchitis [2]	Combined range	Small, reversible declines in lung function in children [3, 4]	Combine range [5]
No Significant Effects Noted				125* [6]—160 [3]	<125

*Indicates levels used for upper and lower bound of range.

[1] Various analyses of daily mortality encompassing the London winter of 1958–59, 14 winters from 1958–72, in aggregate and individually. Early winters dominated by high smoke and SO_2 from coal combustion with frequent fogs. From 1982 CD: Martin and Bradley (1960); Ware et al., (1981); Mazumdar et al. (1981). From 1986 CD Addendum: Mazumdar et al. (1982); Ostro (1984); Schwartz and Marcus (1986). Later studies show association across entire range of smoke, with no clear delineation of "likely" effects or threshold of response possible.

[2] Study of symptoms reported by bronchitis patients in London, mid-50's to early 70's: Lawther et al. (1970).

[3] Study of pollution "episodes" in Steubenville, Ohio, 1978–80; Dockery et al. (1982).

[4] Study of 1985 pollution episode in Ijmond, The Netherlands; Dassen et al. (1986).

[5] (a) *Conversion of BS readings to PM_{10} levels:* Assumes for London conditions and BS readings in the range 100–500 $\mu g/m^3$, $BS < PM_{10} < TSP$. Precise conversions are not possible. Uncertainty in measurements of BS and conversion relationships preclude quantitative estimates of range for lower BS levels. The upper bound assumption ($PM_{10} = TSP = BS + 100$ $\mu g/m^3$) overestimates PM_{10} levels, while the lower bound assumption ($PM_{10} = BS$) understates PM_{10} levels.

(b) *Conversion of TSP to PM_{10} for Dockery et al. results:* Based on analysis of particle size fraction relationships in Steubenville (Spengler et al. 1986). The lower bound TSP of 220 $\mu g/m^3$ was the peak reported for the Spring 1980 study. A PM_{10}/TSP ratio of about 0.8 occurred at a nearby site on days surrounding this peak. Using lower bound of PM_{10}/PM_{15} ratio from later year (0.8), the PM_{10} to TSP ratio estimate used is 0.64. The 160 $\mu g/m^3$ reflects peak level in Fall 1980 from episode with no significant functional decline noted.

(c) *Conversion of Dassen et al. results to PM_{10}:* Both PM indices (Respirable Suspended Particles [RSP] and TSP) reached similar levels. Results suggest TSP levels too low, but PM_{10} levels unlikely to be much higher than RSP. Thus $RSP = PM_{10}$ assumed for conditions of higher concentrations in this study. The 125 $\mu g/m^3$ entry reflects an excursion occurring 2 days prior to date on which no decrements noted.

The data do not provide evidence of clear thresholds in exposed populations. Instead, they suggest a continuum of response for a given number of exposed individuals with both the likelihood (risk) of any effects occurring *and* the extent (incidence and severity) of any potential effect decreasing with concentration. This is particularly true for the statistical analyses of daily mortality in London. Substantial agreement exists that wintertime pollution episodes produced premature mortality in elderly and ill populations, but the range and nature of association provide no clear basis for distinguishing any particular lowest "effects likely" levels or for defining a concentration below which no association remains. The recent lung function studies in children also provide evidence of effects at concentrations in the range listed in Table 1, but the relationships are not certain enough to derive "effects likely" levels for PM_{10}. The lung function studies do, however, suggest levels below which detectable functional changes are unlikely to occur in exposed populations. Following CASAC recommendations, the staff used the combined range listed in the "effects possible" row as a starting point for developing alternative standards.

The original range proposed by the Administrator, drawn from the 1982 staff analysis, was 150 to 250 $\mu g/m^3$ PM_{10}, 24-hour average with no more than one expected exceedance per year. The lower bound of this range was derived from the original assessment of the London mortality studies. As a result of its updated assessment of reanalyses of the London mortality and more recent U.S. morbidity studies, the staff reduced the level of the lower bound of the range of interest to 140 $\mu g/m^3$ (SPA, p. 51), while noting that the difference between it and original lower bound (150 $\mu g/m^3$) is within the range of uncertainty associated with converting the morbidity study results from TSP to PM_{10}.

As indicated in Table 1, the study of Lawther et al. (1970) judged to provide evidence that health effects are likely at particulate matter concentrations above 250 $\mu g/m^3$ (as BS). The effects observed in this study (related to aggravation of bronchitis) are of concern both because of their immediate impact and because of the potential for inducing longer-term deterioration of health status in a significant sensitive group. There were approximately 6.5 million bronchitics in the U.S. in 1970 (DHEW, 1973). Based on the uncertain conversion between smoke and PM_{10} outlined in Table 1, the lowest "effects likely" level derived from the Lawther study (250 $\mu g/m^3$ as BS) should be in the range of 250 to 350 $\mu g/m^3$, in PM_{10} units.

The assessment of this study formed the basis for the upper bound of the range of PM_{10} standards proposed by the Administrator in 1984. Considering this study alone, a PM_{10} standard of 250 $\mu g/m^3$ might appear to contain some margin of safety, even for the sensitive bronchitics studied, because it incorporates a conservative British Smoke/PM_{10} conversion factor and because of differences between exposure conditions in the British study and current U.S. air quality (SP, pp. 100–101). Because bronchitics are identified as a group particularly sensitive to particulate pollution, a standard of 250 $\mu g/m^3$ (as PM_{10}) also might provide some margin of safety for other, less sensitive, groups. Nevertheless, this study of bronchitics in London has inherent limitations in sensitivity that preclude derivation of unequivocal "effects thresholds" at 250 $\mu g/m^3$ as BS, and by extension PM_{10}. The criteria document notes that associations between pollution and health status persisted at lower BS concentrations in selected, more sensitive individuals. Although the lead author of the study objects to attaching any importance to these latter findings (Lawther, 1986), EPA, with CASAC concurrence, finds no basis for asserting that this study demonstrates a population threshold at 250 $\mu g/m^3$.

In evaluating the margin of safety for a 24-hour standard, it is also important to consider the London mortality studies. A standard at the upper portion of the proposed range (250 $\mu g/m^3$) would be well below the levels (500 to 1000 $\mu g/m^3$ as BS) of the historical London episodes in which the scientific consensus indicates that pollution was responsible for excess mortality (CD, Table 14–7). The portions of the population at greatest risk of premature mortality associated with particulate matter exposures in such episodes

include the elderly and persons with pre-existing respiratory or cardiac disease. Although the extent of life shortening (days, weeks, or years) cannot be specified, the seriousness of this effect strongly justifies a margin of safety for it (below the consensus effects levels) that is larger than that warranted for the effects on bronchitics.

The staff assessment of the several reanalyses of London mortality suggests, however, that the risk of premature mortality to sensitive individuals extends to concentrations substantially lower than those which occurred in the "episodes." The more recent analyses (Mazumdar et al., 1982; Ostro, 1984; Shumway et al., 1983) provide no objective support for a population threshold below which such a risk no longer exists. Although the risk to individuals may be small at concentrations of 250 $\mu g/m^3$ and below, the number of people exposed to lower concentrations given current U.S. levels is substantially larger than the number exposed to higher levels (SPA, Table 2-1). The increased number of individuals exposed increases the risk that effects will occur in the total population exposed.

Differences in the composition of particles and gases among U.S. cities and between current conditions in the U.S. and those in London at the time the mortality and morbidity data were gathered add to the complexity of assessing the risk associated with particulate matter in the U.S. In the case of the mortality studies, however, the staff found that at least one of the more recent studies (Ozkaynak and Spengler, 1985) provides qualitative support for an association between daily mortality and particle concentrations in nearly contemporary U.S. atmospheres (SPA, pp. 43-44).

The 1982 assessment of the mortality studies and related factors prompted the Administrator to consider standard levels that extended from 250 $\mu g/m^3$ down to the lower bound of the original staff range of interest (150 $\mu g/m^3$) and even lower. The more recent analyses of the London mortality data provide additional evidence that serious adverse health effects may occur at particulate concentrations below 250 $\mu g/m^3$. These analyses have addressed a number of the uncertainties associated with the earlier studies, and have reinforced the Administrator's concern that a 24-hour standard at the upper end of the proposed range may not provide an adequate margin of safety. However, given the uncertainties in converting from BS to PM_{10} measurements, particularly at lower concentrations, and the possible differences in particulate composition between London at the time the data were gathered and the contemporary U.S., it is difficult to use these studies to set a precise level for a PM_{10} standard (SPA, pp. 49-51).

Given these difficulties, it is important to examine contemporary studies that utilize gravimetric measurements of particulate concentrations. The staff found the studies of Dockery et al. (1982) and Dassen et al. (1986) to be particularly useful. The Dockery study observed physiologically small but statistically significant decreases in lung function in a group of children exposed to peak PM_{10} levels of 140-250 $\mu g/m^3$. The decrements persisted for 2-3 weeks following the exposures. The study also suggested the possibility of larger responses in a subset of the children, including those with existing respiratory symptoms. The Dassen study recorded similar decrements in children in the Netherlands following exposure to PM_{10} levels estimated at 200 to 250 $\mu g/m^3$, but no observable effects two days after exposure to PM_{10} levels estimated at 125 $\mu g/m^3$. The particle composition, at least in the Dockery study, is more representative of contemporary U.S. cities and the associated aerometry provides a more reliable estimate of PM_{10} levels than do the measurements used in the London studies. It is reasonable to expect that the effects observed (small reversible reductions in lung function in children) are, in most cases, more sensitive to air pollution than those observed in the London studies. These effects are, of themselves, of uncertain significance to health, but might be associated with aggravation of respiratory symptoms in children with preexisting illness (SPA, p. 47). Long-term examination of respiratory health in the same community studied by Dockery et al. (1982) suggests that the children in that community have a higher incidence of respiratory illness and symptoms than children in communities with lower particle levels, but the data show no evidence for any persistent reduction in lung function (Ware et al., 1986). Uncertainties with respect to the effects of other pollutants (e.g., SO_2), the consistency of the changes, and exposures preclude specifying unequivocal "effects likely" levels based on this study. The staff assessment therefore suggests that short-term lung function effects in children are possible across a range of 140-250 $\mu g/m^3$ or more as PM_{10} (SPA, p. 50).

In making a decision on a final standard level, the Administrator also considered information from the more qualitative studies of PM assessed by the staff (SP, pp. 101-103; SPA, pp. 52-53). These suggest increased risks for sensitive groups (asthmatics) and risks of potential effects (morbidity in adults) not demonstrated in the more quantitative epidemiological literature. The qualitative studies do not provide clear information on effects levels, but do justify consideration of effects of particulate matter that have not been sufficiently investigated.

Based on the scientific assessment at the time, the Administrator in 1984 expressed an inclination to select a 24-hour level from the lower portion of the proposed range of 150-250 $\mu g/m^3$. The present Administrator finds that the updated scientific assessment supports the original inclination and, if anything, suggests an even wider margin of safety is warranted. The recent analyses of daily mortality are of particular concern in this regard. The Administrator has, therefore, decided to set the final standard at the extreme lower bound of the range originally proposed: that is, at 150 $\mu g/m^3$. This standard provides a substantial margin of safety below the levels at which there is a scientific consensus that particulate matter causes premature mortality and aggravation of bronchitis. Such a margin is necessary because of the seriousness of these effects and because of the recent analyses of daily mortality that suggest adverse effects may occur at particulate matter levels well below the consensus levels. The standard is in the lower portion of the range where sensitive, reversible physiological responses of uncertain health significance are possibly, but not definitely, observed in children. Using a conservative assessment of lung function/particle relationship from Dockery et al., a change in concentration from background levels (~20 $\mu g/m^3$) to 150 $\mu g/m^3$ would produce lung function changes of at most 10 to 15% in less than 5% of exposed children (SPA, p. 48). Based on the results of Dassen et al. (1986), it appears unlikely that any functional changes would be detected one or two days following such exposures (SPA, p. 50). Thus, the maximum likely changes in lung function appear to present little risk of significant adverse responses. Standards set at a somewhat higher level would, however, present an unacceptable risk of premature mortality and allow the possibility of more significant functional changes. Furthermore, a standard level of 150 $\mu g/m^3$ is fully consistent with the

recommendations of CASAC on the 24-hour standard (Lippmann, 1986c).

2. Annual Standard

The updated staff assessment of important long-term epidemiological data is summarized in Table 2. Long-term epidemiological studies are subject to additional confounding variables that reduce their sensitivity and make their interpretation more difficult than that of short-term studies. The "effects likely" levels are derived from the criteria document, but again, no clear thresholds can be identified for all effects categories. Evidence exists of effects at lower levels—the "effects possible levels"—but the evidence is inconclusive and effects are difficult to detect in the available epidemiological studies.

TABLE 2.—UPDATED STAFF ASSESSMENT OF LONG-TERM EPIDEMIOLOGICAL STUDIES (AFTER TABLE 4-2, SPA)

Effects/Study	Measured BS levels (as μg/m³)	Measured TSP levels (μg/m³)					Equivalent PM_{10} levels (μg/m³) [5]
	Increased respiratory disease, reduced lung function in children [1]	Increased respiratory disease, symptoms, small reduction in lung function in adults [2]	Increased respiratory symptoms in adults [3]	Increased respiratory symptoms and illnesses in children [4]	Reduced lung function in children [4]	Combined range	Combined range [5]
Effects likely	230–300	*180				>180	>60–90
Effects possible	<230	*130–180	60–150(110)	*80–114		80–180	40–90
No significant [6] effects noted		80–130			40–114	<80	<40

*Indicates levels used for upper and lower bound of range.

[1] Study conducted in 1963–65 in Sheffield, England (Lunn et al., 1967). BS levels (as μg/m³) uncertain.

[2] Studies conducted in 1961–73 in Berlin, NH (Ferris et al., 1973, 1976). Effects likely level (180 μg/m³) based on uncertain 2-month average. Effects on lung function were relatively small.

[3] Study conducted in 1973 in two Connecticut towns. (Bouhuys et al., 1978). Exposure estimates reflect 1965–73 data in Ansonia. Median value (110 μg/m³) used to indicate long-term concentration. No effects on lung function, but some suggestion of effects on respiratory symptoms.

[4] Study conducted in 1976–1980 in 6 U.S. cities (Ware et al., 1986). Exposure estimates reflect 4-year averages across cities. Comparable pollution/effects gradients not noted within cities.

[5] Conversion of TSP to PM_{10} equivalents for Berlin, Ansonia studies based on estimated ratio of PM_{10}/TSP for current U.S. atmospheres (Pace, 1983). The estimated ratio ranged between 0.45 and 0.5. Conversion for six-city study based on site-specific analysis of particle size data (Spengler et al., 1986).

[6] Ranges reflect gradients in which no significant effects were detected for categories at top. Combined range reflects all columns.

Based on a recent assessment of PM_{10}/TSP ratios in areas with elevated TSP levels, the updated staff assessment revised the "effects likely" levels from the Ferris et al. (1973) study to 80 to 90 μg/m³ as PM_{10} (SPA, p. 58). Because of limitations in sampling duration as well as the conversion to PM_{10}, this estimate is particularly uncertain. As indicated in the table, effects are possible at lower concentrations. Of greatest concern is the possibility of long-term deterioration of the respiratory system in exposed populations, the potential for which is indicated by lung function (mechanical pulmonary) changes and increased incidence of respiratory disease. One set of studies (Ferris et al., 1973, 1976) provides some evidence for a "no observed effects" level for these effects at or below 60 to 65 μg/m³ (130 μg/m³ as TSP) while another study (Bouhuys et al., 1978), suggests some possibility of symptomatic responses in adults at long-term median levels at or below about 50 to 55 μg/m³ as PM_{10}. The importance of these symptomatic responses, which were unaccompanied by lung function changes, to long-term respiratory health is unclear.

The most important recent study of long-term effects is an ongoing examination of six U.S. cities (Ware et al., 1986). The study indicates the possibility of increased respiratory symptoms and illnesses in children at multi-year levels across a range of 40 to over 58 μg/m³ as PM_{10}, but found no evidence of reduced lung function at such concentrations. This study did not find similar gradients in symptoms and illness within some of the cities, which had somewhat smaller localized pollution gradients. The results of a separate series of studies of long and intermediate term (2 to 6 weeks) exposures in a number of U.S. metropolitan areas (Ostro, 1987; Hausman et al., 1984) are more supportive of the possibility of effects within cities (respiratory related activity restrictions in adults) at comparable U.S. exposure levels. The results of these more recent studies are generally consistent with the earlier U.S. studies listed in Table 2 (SPA, 57). In particular, the finding of symptomatic responses in children with no change in lung function (Ware et al., 1986) is consistent with similar findings in adults (Bouhuys et al., 1973) at estimated long-term PM_{10} levels down to 50 μg/m³. However, the information available to support the existence of significant adverse effects at annual PM_{10} levels below 50 μg/m³ — especially when 24-hour levels are maintained below 150 μg/m³—is quite limited and uncertain.

Because of the uncertainties in (SP, pp. 104–110; SPA, 54–59), as well as the limited scope and number of these long-term quantitative studies, it is particularly important to examine the results of qualitative data from a number of epidemiological, animal, and ambient particle composition studies when evaluating what constitutes an adequate margin of safety for an annual standard. These studies justify concern for serious effects not directly evaluated in the studies listed in Table 2. Such effects include damage to lung tissues contributing to chronic respiratory disease, cancer, and premature mortality (SP, pp. 109–111). Substantial segments of the population may be susceptible to one or more of these effects (SP, p. 46). Although the qualitative data do not provide evidence for major risks of these effects at current annual particulate matter levels in most U.S. cities, the Administrator believes that the seriousness of the potential effects and the large population at risk warrant caution in setting the standard.

Based on the then current scientific assessment, the Administrator proposed in 1984 to select the annual standard level from a range of 50 to 65 $\mu g/m^3$. In the proposal, the Administrator favored a standard in the lower portion of the range. The more recent evidence, although subject to substantial uncertainty, serves to reinforce this inclination. In light of the updated assessment and in accordance with the recommendation of CASAC, the Administrator has decided to set the level of the annual standard at the lower bound of the original range, 50 $\mu g/m^3$, expected annual arithmetic mean. This standard provides a reasonable margin of safety against the serious effect of long-term degradation in lung function, which has been judged likely at estimated PM_{10} levels above 80–90 $\mu g/m^3$ and for which there is some evidence at PM_{10} levels above 60 to 65 $\mu g/m^3$. Such a standard also provides reasonable protection against the less serious symptomatic effects for which some studies provide evidence at PM_{10} levels down to 50 $\mu g/m^3$. Although some small risk of increased respiratory symptoms may exist at this concentration, the available data are currently inconclusive on this point. Moreover, the staff and CASAC have recommended that the combined protection afforded by both 24-hour and annual standards be considered in selecting the final standard level. In this regard, analyses of air quality data show that implementation of the 24-hour standard will substantially reduce annual levels in a number of areas to below 50 $\mu g/m^3$, adding to the protection afforded by the annual standard in areas with higher 24-hour peak to mean ratios (SPA, p. 61; Freas, 1986). Based on the present evidence with respect to risks associated with annual exposures, the Administrator finds that the annual and 24-hour standards announced today provide an adequate margin of safety.

IV. Rationale for the Secondary Standards

Section 109(b)(2) of the Clean Air Act states that secondary NAAQS should be set at a level requisite to protect the public welfare from any known or anticipated adverse effects associated with the presence of an air pollutant in the ambient air. The criteria document and staff paper examined the effects of particulate matter on such aspects of public welfare as visibility and climate, man-made materials, vegetation, and personal comfort and well being. Each aspect is discussed in some detail in those documents. The following discussion of the rationale for the secondary standards focuses primarily on considerations that were most influential in the Administrator's decision or that differ in some respect from, or expand upon, considerations that influenced the staff and/or CASAC recommendations.

A. Soiling and Nuisance

At high enough concentrations, both large and small particles may soil household and other surfaces, or otherwise become a nuisance. Both effects can result in increased cleaning costs and decreased enjoyment of the environment (SP, p. 140). Efforts to control particulate matter in U.S. cities from 1970 to 1978 were estimated to have produced substantial economic benefits because of reduced soiling and nuisance (CD, p. 1–61). The staff paper therefore recommended consideration of soiling and nuisance generated by dust and other particles in setting a secondary standard (SP, p. 141).

In proposing secondary standard(s) for particulate matter, the Administrator first examined whether the pollutant indicator (PM_{10}), averaging times and form, and range of levels of the proposed primary standards would provide adequate protection against soiling and nuisance. This examination was complicated by uncertainties in the scientific data base that largely preclude accurate quantification of the extent of effects associated with specific particle sizes and concentrations or deposition, and by the fact that the protection afforded by primary standards depends upon the particular combination of levels chosen within the ranges that were proposed for the primary standards. The Administrator proposed a separate indicator and range of secondary standards, while also soliciting comment on the alternative of making the secondary standards identical in all respects to the proposed primary standards for PM_{10}. In so doing, the Administrator noted that "depending on the exact levels of primary standards chosen, the combined requirements for meeting both 24-hour and annual primary standards for PM_{10} might be considered adequate to protect against possible adverse effects relating to soiling and nuisance from all relevant particle sizes." (49 FR 10418).

The decision to adopt the specific revised primary standards discussed in section IV above permits a more definitive assessment of the protection afforded by those standards against potential adverse welfare effects. In addition, information submitted in the public comments, the review of the March 20, 1984 proposal by the CASAC, and further analysis of the welfare effects information by Agency staff have amended the basis for the final decision on the secondary standards. The basis for the original proposal and the implications of the more recent findings are summarized below.

The Administrator originally proposed (1) to retain TSP as the indicator for the secondary standard and (2) to select the standard level from a range of 70–90 $\mu g/m^3$, expected annual arithmetic mean. Given the nature of the evidence available, the Administrator expressed an inclination to select the level for the standard from the upper portion of the range.

The proposal noted that both PM_{10} and TSP could be useful indicators for a secondary standard for soiling and nuisance. PM_{10} is useful because in a qualitative sense: (1) Particles smaller than 10 μm in diameter are more likely than larger particles to penetrate indoors; they are also more likely than larger particles to soil vertical surfaces (SP, pp. 136–137) and (2) due to the characteristic size distributions and origins of particles in the atmosphere (SP, pp. 14–19), control of particles less than 10 μm in diameter would also limit the concentration of larger particles. The TSP indicator was proposed, however, because of the lack of data permitting clear distinctions among size ranges with respect to soiling and nuisance, the more inclusive nature of TSP, and the fact that most of the available information relating soiling and nuisance to air pollution used TSP as an indicator.

Information submitted in the public comments expanded on some of the limitations of TSP as an indicator that were noted in the preamble, namely: (1) The collection efficiency of the high volume sampler, which measures TSP, decreases rapidly for particles with diameters in excess of 25–40 μm; thus, the TSP measurement itself can omit a substantial fraction of the very large particles that can make a substantial contribution to soiling of horizontal surfaces; and (2) because the collection efficiency of the high volume sampler varies more with windspeed than do PM_{10} samplers, TSP may be a less reliable indicator of elevated concentrations of larger particles than PM_{10}.

In light of these considerations, the CASAC in reviewing the March 20 proposal package concluded that it could find no convincing scientific support *for* maintaining TSP as an indicator for the secondary standards (Transcript of December 16, 1985 CASAC meeting, pp. 58–71; Docket No. A–82–37).

In developing a range of levels for the secondary standard, EPA found that the available data base provides compelling evidence that elevated levels of particulate matter can produce adverse welfare effects, but provides little quantitative information on concentration-effects relationships. Physical damage and economic studies tend to show no obvious welfare effects "thresholds" for soiling. With time, particulate matter may accumulate on surfaces even at low concentrations. At very low concentrations, however, the amounts of particulate matter may be virtually invisible to the human eye or be so slight as to be ignored by most people (Carey, 1959; Hancock et al., 1976). Up to a point, the buildup of particles on surfaces may not be generally regarded as a social problem because it is removed by rain or routine cleaning and maintenance before substantial accumulation can occur. Moreover, even if an accumulation is large enough to be noticed, it is not necessarily considered to be a problem. Thus, the critical judgment for selecting a standard level is to determine a particulate matter concentration at or above which the soiling effect becomes important enough that it should be regarded as an "adverse" effect under section 109(b)(2) of the Act.

The available information suggests that the public does make a distinction between concentrations at which particulate pollution is merely noticeable and higher levels at which it is considered a nuisance. A study of the response of a panel of human subjects to dust on surfaces concluded that the level of dustiness that is found to be objectionable is higher than the level that can be perceived or discriminated (Hancock et al., 1976). It is not, however, possible to derive unique ambient concentration thresholds for adverse effects from this kind of study. A more direct study of perception of air pollution as a nuisance (CD, p. 9-67) suggested that people considered air pollution a nuisance in areas where annual levels were at or somewhat above the level of the current annual primary TSP standard (75 $\mu g/m^3$, annual geometric mean). The upper bound of the proposed range of interest (90 $\mu g/m^3$ TSP), expected annual arithmetic mean, was derived by taking that level and making appropriate conversions to account for the expected arithmetic mean form.

The lower bound of the proposed range (70 $\mu g/m^3$) was supported by a rough analysis of economic benefits of reduced outdoor soiling that might be associated with decreased TSP levels in U.S. cities (CD, p. 10-73). During the public comment period, one of the authors of the analysis that formed the basis for these estimates submitted a more recent analysis which called the earlier analysis into question (Watson and Jaksch, 1984). The author claimed that estimates of benefits from reduced TSP concentrations were significantly overstated because they did not take into account the extent to which the public could perceive improvements associated with reduced concentrations. Other commenters indicated that the underlying experimental data suggested a threshold for economic soiling effects at an annual TSP level of about 150 $\mu g/m^3$.

EPA staff examined the underlying experimental data used in the original analysis. This staff examination (Haines, 1987) has been placed in the rulemaking docket. The staff found that of 27 household cleaning activity categories examined in the underlying experiment (Booz, Allen, Hamilton, 1970), 6 (5 outdoor) were statistically significantly associated with particulate matter across some concentration gradient. In further comparing areas with differing concentrations of in TSP, it was found that the number of significant associations decreased with decreasing TSP levels. The staff concluded that these data provide no convincing evidence to support estimates of significant economic benefits from reducing PM levels below 90 to 100 $\mu g/m^3$.

Following the original inclination of the Administrator and the more recent findings, an annual TSP level of 90 $\mu g/m^3$ was used as a benchmark in an analysis to determine whether the primary particulate matter NAAQS would protect against soiling and nuisance (SP, Table 2-1). An earlier version of these results was presented at the December 16, 1985 CASAC meeting. The analytical approach, assumptions, and limitations of the methodology used in the analysis are discussed in a separate report, which has been placed in the rulemaking docket (Pace et al. 1986). The results indicated that the combined implementation of the primary 24-hour and annual PM_{10} standards announced above would substantially reduce TSP levels to the extent that only 6 counties nationwide would experience annual mean TSP levels in excess of 90 $\mu g/m^3$ and none would exceed 100 $\mu g/m^3$.

In short, EPA has determined that there is no convincing evidence of significant adverse soiling and nuisance at TSP levels below 90-100 $\mu g/m^3$, and that the primary standards promulgated today would permit few, if any, areas to sustain TSP levels above 90-100 $\mu g/m^3$. On the basis of these determinations, the Administrator concludes that a secondary standard different from the primary standards is not requisite to protect the public welfare against soiling and nuisance. This conclusion is supported by the CASAC's determination that there is no scientific support for a TSP-based secondary standard. (Transcript of December 16, 1985, CASAC meeting, p. 71; Docket No. A-82-37). Therefore, the Administrator has decided to set 24-hour and annual secondary PM_{10} standards that are equal in all respects to the primary standards.

B. Other Welfare Effects

The other welfare effects of particulate matter of principal interest are impairment of visibility, potential modification of climate, and contribution to acidic deposition. All three of these effects are believed to be related to regional-scale levels of fine particles, and control programs designed to ameliorate them would likely involve region-wide reductions in emissions of sulfur oxide (SP, p. 147; Friedlander, 1982).

Because of the likely overlap between control measures designed to protect visibility and control measures designed to address acidic deposition, EPA, in its March 20, 1984, notice of proposed rulemaking on the particulate matter standards, did not propose a secondary standard designed to protect visibility. Instead, the Agency decided to defer action pending development of compatible strategies to address both of these related regional air quality problems.

Since publication of the notice of proposed rulemaking, EPA has continued to gather information on acidic deposition and on visibility, and to analyze the potential impact on visibility of strategies designed to control acidic deposition. In particular, EPA has received the report of an Interagency Task Force on Visibility. In light of the Task Force's recommendations as well as other information gathered by the Agency, EPA is now reassessing its position with regard to consideration of a secondary fine particle standard for visibility. In particular, the Agency is considering whether, given the time that would be required to develop, propose, promulgate, and implement a visibility based standard, it would now be appropriate to proceed with consideration of a visibility based standard in parallel with work on acid deposition, so that compatible strategies

for dealing with the two problems can be developed at the implementation stage.

Accordingly, EPA is publishing elsewhere in today's Federal Register an advance notice of proposed rulemaking soliciting public comment on the appropriateness of a separate secondary fine particle standard designed to protect visibility, and on a number of issues that would have to be resolved in proposing such a standard.

The Administrator also concurs with the staff suggestions that a separate secondary particle standard is not needed to protect vegetation or to prevent adverse effects on personal comfort and well-being (SP, pp. 143–144).

[redacted]

The reference method for the measurement of atmospheric particulate matter as PM_{10}, promulgated today as Appendix J to 40 CFR Part 50, is based on selection of PM_{10} particles by inertial separation, followed by filtration and gravimetric determination of the PM_{10} mass on the filter substrate. The particle size discrimination characteristics of reference method samplers (or sampler inlets) are prescribed as performance specifications in amendments to 40 CFR Part 53, promulgated elsewhere in today's Federal Register.

The requirements in Appendix J are generally prescribed as functional or performance specifications in order to allow sampler manufacturers flexibility in designing or configuring their PM_{10} samplers. Sampler shape, inlet geometry, operational flow rate, degree of automation, and other sampler characteristics or features are specified only in terms of required function or performance.

While most of the comments received on Appendix J generally supported the performance-based approach to specifying PM_{10} reference methods, many commentors felt that the sampler performance specifications in the proposed Appendix J and 40 CFR Part 53 were not adequate to ensure accurate collection of PM_{10} under all conditions of ambient sampling. In response to such comments, the sampler performance specifications in Part 53 and the corresponding references to such requirements in Appendix J have been revised. Other comments were received on various requirements of Appendix J such as flow calibration and measurement, flow regulation, filter media, filter equilibration, and sampler maintenance. Specific changes to Appendix J resulting from these comments and from review of other pertinent information are discussed below.

A. Specific Changes to Appendix J

Section 3.0 has been revised to specify that all samplers should be capable of measuring 24-hour PM_{10} mass concentrations of at least 300 $\mu g/m^3$ while maintaining the operating flow rate within specified limits.

In Section 4.0 the term "reproducibility" has been changed to "precision" and the specification for PM_{10} samplers has been changed from 15 percent or better to 7 percent or 5 $\mu g/m^3$, whichever is higher. The particle size for 50 percent sampling effectiveness in Section 5.0 has been changed from 10± 1 micrometers to 10±0.5 micrometers. These changes are a result of corresponding changes in the PM_{10} sampler performance specifications in 40 CFR Part 53, promulgated elsewhere in today's Federal Register. Refer to the Part 53 action for further discussion of these changes.

In Section 6.0 the subsection on nonsampled particulate matter has been removed. The design of particle size discriminating inlet systems for PM_{10} samplers essentially precludes the transport of windborne particulate matter to the particle collection filter during periods when the sampler is idle. Although windborne particles could potentially enter a PM_{10} sampler's air inlet opening during idle periods, they would have to take a tortuous path with several changes in direction to reach the collection filter.

References to "automatic flow controller" throughout Appendix J have been changed to "flow control device". The latter term is less restrictive and more clearly allows the use of any type of flow regulation device, provided that the other flow-related requirements of Appendix J are met. In particular, Section 7.1 has been changed to require that a PM_{10} sampler have a flow control device capable of maintaining the sampler's operating flow rate within the limits specified for the sampler inlet. The requirement that the flow control device have a flow rate adjustment capability has been removed to allow for the use of certain types of flow controllers (e.g., Venturi-type critical flow devices) that regulate flow at a constant but unadjustable rate. Flow controllers of this type generally employ a fixed-geometry orifice and control the sampler's flow rate without any moving parts or electronic components. The requirement that the flow control device be disabled during calibration has also been removed because it is only applicable to certain types of devices (e.g., electronic flow controllers). Sampler-specific operational requirements such as this are better addressed in the sampler manufacturer's instruction manual.

Subsection 7.1.6 has also been changed to explicitly require that the instruction manual associated with the sampler include detailed procedures for calibration, operation, and maintenance of the sampler. Since much emphasis is placed on the role of the sampler manufacturer's instruction manual in Appendix J, it is important that it contain detailed information on all aspects of sampler operation. The instruction manual for each designated reference method would be reviewed and approved as part of the Part 53 reference method designation process.

The filter alkalinity specification in Subsection 7.2.4 has been changed from <0.005 milliequivalents/gram of filter to <25 microequivalents/gram of filter. In addition, the method used for the alkalinity determination has been changed to a newly developed, more sensitive, and more reliable method. The change in the magnitude of the specification results from the change in procedures (alkalinity measurements are approximately 5 times higher with the new method), and from the change in the measurement units.

Section 7.3 includes specifications and other requirements for the flow rate transfer standard used during sampler calibration. The specifications for the reproducibility and resolution of the flow rate transfer standard have been removed and replaced with an accuracy specification. The revised Section 7.3 requires that the flow rate transfer standard be capable of measuring the sampler's operating flow rate with an accuracy of ±2 percent. An accuracy specification, stated in this context, is more meaningful and useful than specifications for reproducibility and resolution. In addition, the requirement that the flow rate transfer standard include a means to vary the sampler's flow rate during calibration is not appropriate for all types of samplers and/or flow rate transfer standards and has been removed. This is another example of a sampler-specific requirement that is better addressed in the sampler manufacturer's instruction manual.

The humidity requirement for the filter conditioning environment in Section 7.4 has been changed from a single specification of 45±5 percent relative humidity (RH) to separate specifications for humidity range (20 percent to 45 percent RH) and humidity control (±5 percent RH). Under the revised requirements, filters may be equilibrated at any preselected humidity between 20

and 45 percent RH, provided that the humidity is controlled to within 5 percent RH. Language has also been added to Section 9.0 to require that the same temperature and humidity conditions be used for both pre- and post-sampling filter equilibration.

The calibration and operational procedures for PM_{10} samplers vary considerably depending on the type of sampler (e.g., high-volume, medium-volume, low-volume) and the type of flow control and flow measurement devices employed in the sampler. Accordingly, the calibration and procedure sections of Appendix J (Sections 8.0 and 9.0) have been revised substantially to be more general in nature. The revised procedures serve to illustrate the steps involved in the calibration and operation of a PM_{10} sampler, and place more emphasis on the sampler manufacturer's instruction manual and the Quality Assurance Handbook for specific guidance.

A new section on sampler maintenance has been incorporated into Appendix J to explicitly require that PM_{10} samplers be maintained in strict accordance with the procedures provided in the sampler manufacturer's instruction manual. The performance of some PM_{10} samplers may be adversely affected by the buildup of substantial quantities of non-PM_{10} particulate matter within the sampler inlet. Such samplers may require periodic cleaning and other maintenance to ensure accurate collection of PM_{10} particulate matter. This new section has been added as Section 10.0, and the calculations and references sections have been renumbered accordingly.

When temperature and pressure corrections to sampler flow indicator readings are required, corrections based on existing temperature and pressure at the time the readings are taken (or daily average values during the sampling period in some cases) are preferable. However, incorporation of site or seasonal average temperatures and barometric pressures into the sampler calibration to avoid daily temperature and pressure corrections is also allowed. When temperature and pressure corrections to flow indicator readings are required, existing temperature and pressure at the time the readings are taken (or daily average values during the sampling period in some cases) must be used. Likewise, the calculations section has been changed to require that the average barometric pressure and average ambient temperature *during the sampling period* be used to calculate Q_{std}. Site or seasonal average values for temperature and barometric pressure may be required in the adjustment of the set-point of certain types of flow control devices (e.g., mass flow controllers). Site or seasonal average values for temperature and pressure are used in these cases to ensure that the deviations in actual volumetric flow rates, resulting from daily changes in temperature and pressure at the monitoring site, are centered about the sampler inlet's design flow rate.

Other minor wording changes have been made throughout Appendix J to clarify the requirements.

B. Designation of Reference Methods for PM_{10}

Before a method for PM_{10} is approved as a PM_{10} reference method, it must meet the requirements of Appendix J and be tested and designated as a reference method in accordance with the provisions of 40 CFR Part 53. Testing of candidate reference methods will generally be conducted by the sampler manufacturers. A notice will be published in the Federal Register in accordance with Part 53 whenever an application for a PM_{10} reference method determination is received by EPA. Likewise, a notice of designation and other information pertinent to the designation will be published in the Federal Register each time a PM_{10} reference method is approved for use. PM_{10} sampler manufacturers are required to provide sampler purchasers with an operation or instruction manual containing detailed procedures for the calibration, operation, and maintenance of the sampler. Additional guidance and recommendations regarding filter media, type of analytical balance required for mass determinations, and other requirements of the method should also be provided in the manual. Part 53 requires submission of the manual as part of a manufacturer's application for a reference method determination. The instruction manual will be reviewed for technical accuracy and consistency with the requirements of Appendix J and must be approved as part of the requirements for designation of the method as a reference method.

C. Technical Change to Appendix G

Because the high-volume method described in Appendix B will continue to be used in conjunction with Appendix G ("Reference Method for the Determination of Lead in Suspended Particulate Matter Collected from *Ambient Air*") and for other purposes that may be specified, EPA is promulgating the technical changes to Appendix G as proposed. Under the final rule the reference 10 in Appendix G has been deleted and section 5.1.1 of the Appendix has been revised to read as follows:

"High Volume Sampler. Use and calibrate the sampler as described in Appendix B to this Part." The Appendix has also been revised to specify more directly that the high-volume method described in Appendix B is to be used in conjunction with the reference method for lead.

VI. Summary of Salient Public Comments and Agency Responses

An overview of public comments on the major aspects of the March 20, 1984 proposal are presented in Section II. The most important comments on specific issues are categorized and summarized below together with Agency responses. A more comprehensive compilation of comments and Agency responses is contained in a separate Response to Comments Document that has been placed in the Docket (No. A-82-37).

A. Health Effects Criteria and Selection of the Primary Standards

1. Indicator for the Primary Standards

Comments: PM_{15} rather than PM_{10} should be used as the indicator for the primary standards because PM_{15} more accurately reflects particle deposition in the thoracic regions, provides an ample margin of safety in protecting health, and puts less emphasis on coarse particles that are relatively inert than does PM_{10}.

Agency Response: EPA considered the major analysis (Swift and Proctor, 1982) and preliminary arguments (AMC, 1982) in support of a PM_{15} indicator in developing the 1984 proposal. Although EPA deferred judgment pending additional analysis and review, the decision to propose PM_{10} and not PM_{15} was based, in part, on reservations concerning the PM_{15} indicator. The likelihood that the available data from mouthpiece studies overstated thoracic deposition during "natural" breathing was recognized in a qualitative sense by CASAC (cf. July 1981 transcript, p. 581; Docket No. A-82-37) and presented as one reason for recommending PM_{10} rather than PM_{15} or TSP as an indicator. The 1982 staff paper reflected this argument in recommending 10 μm rather than 15 μm as the cutpoint for the indicator (SP, pp. 76-77). The criteria document addendum points out that assumptions used in the quantitative analyses used to support PM_{15} (Swift and Proctor, 1982) appear to underestimate thoracic particle deposition; this underestimation would reduce any margin of safety associated with an

ndicator derived from these data. Extension of the Swift and Proctor analysis itself suggests that approximately 10 to 20% of 10 μm particles could penetrate to the thoracic region, rather than the 0% penetration [illegible] by some commenters who argued for a "D_a" at 10 μm.

The Swift and Proctor analysis as well as several more recent analyses and experimental studies of particle deposition are reviewed in the criteria document and staff paper addendum. The more recent assessments tend to support the original proposal of PM_{10}. The criteria document addendum compares the work of Miller et al. (1986), using the more recent deposition data, with the Swift and Proctor analysis and confirms that the latter understates deposition of particles larger than 6 μm in individuals who habitually breathe through the mouth.

The more recent data also show some fraction of particles of 10 μm and larger can penetrate as far as the alveolar region (CDA, Figure 2-1). The risk associated with deposition of insoluble coarse particles in this region is of particular concern because of slow clearance time (CDA, p. 2-6). Although removal in the tracheobronchial region is more rapid, deposition of coarse particles in the tracheobronchial region may be associated with bronchoconstriction and alteration of clearance mechanisms (SP, Table 5-2). The 1982 staff paper took these factors into account in the original recommendation for a 10 μm indicator that included all of the fine and a portion of the coarse fraction.

After considering these updated assessments, the EPA staff reaffirmed its original recommendation of PM_{10} as an indicator for the standards (SP, p. 32). In reviews of the March 20, 1984 proposal and of the criteria document and staff paper addenda, the CASAC also reaffirmed its recommendation for PM_{10} as an indicator (Lippmann 1986 a,c). The majority of public comments on this issue also favored PM_{10}.

In summary, EPA finds that the presently available record clearly favors the PM_{10} indicator over the alternative PM_a indicator.

Comments: Some commenters suggested that while PM_{10} represents an improvement over TSP, the fine fraction (<2.5 μm) is of relatively greater concern to health than the coarse fraction (2.5 to 10 μm). Such commenters suggest that a $PM_{2.5}$ standard is needed—in addition to or, in some comments, instead of a PM_{10} standard.

Agency Response: The possibility of a fine particle indicator for the primary standard was examined in the staff paper (pp. 68-70). This suggestion is based in part on the recognition that ambient particle mass and volume are distributed such that a rough division "minimum" at about 1 to 3 μm separates the "fine" (smaller) and "coarse" fractions. Each fraction has somewhat distinct chemical and physical properties and sources. The staff, however, noted a number of difficulties in using fine particles (less than a nominal 2.5 μm) alone instead of PM_{10} as the indicator for the primary standards. These include:

(1) Substantial overlap can occur between the two modes and in some cases the division minimum can disappear. Moreover, despite the differing origins and chemistries of the modes, each is chemically heterogeneous. The respiratory tract, in effect, alters the ambient distribution, with a mixture of fine and coarse modes being deposited in both the tracheobronchial and alveolar regions. Indeed, the 2.5 μm "cut" is within the size range of maximum efficiency for alveolar deposition (2 to 4 μm). The mixing of these size fractions in the respiratory tract and the heterogeneity within each fraction therefore blurs the distinction between the fractions in terms of health effects.

(2) Coarse dusts have been associated with responses such as bronchoconstriction, altered clearance and alveolar tissue damage (SP, Table 5-2). Given current information, it would be premature to ascribe all of the effects in the British, U.S., and other epidemiological studies to the fine fraction, or to any single chemical entity within that fraction.

EPA believes that a separate fine particle standard in addition to the PM_{10} standard is not warranted for the following reasons:

(1) Fine mass typically comprises on the order of 40 to 70% of PM_{10}. Therefore, the PM_{10} standards provide substantial limits on fine mass, and

(2) The limited epidemiological data presently available must provide the principal basis for any particulate matter standard. Because these data do not separate the effects of fine and coarse fractions, it is most reasonable to use these data to support a single set of standards.

(3) To the extent that emerging information suggests additional protection may be necessary, it may be more appropriate to consider the addition of chemical-specific (e.g., acid aerosols) standards rather than a fine particle standard in future primary standard revisions.

2. Interpretation of Community Epidemiological Studies

Comments: A number of commenters took issue with EPA's interpretation of the various analyses of London mortality data. These commenters suggest that (a) the London data can be used to show only an association of excess mortality with high concentrations of pollution during unique episodes in which BS and SO_2 levels exceeded 500 to 1000 μg/m³, (b) a number of the analyses suffer from methodological flaws precluding valid conclusions, (c) the conclusion that effects may be possible at low pollution levels (e.g., <250 μg/m³) or that there is a continuum of association with no identifiable threshold is not supportable, (d) the results of Mazumdar et al. (1982) and Ostro (1984) are more consistent with the hypothesis that particulate matter is acting as a surrogate for some other causal agent rather than as a causal agent itself, and (e) it is biologically implausible that mortality could be affected by particulate matter at levels below those shown by Lawther et al. (1970) to produce morbid effects in sensitive populations.

Agency Response: EPA's assessment of the various London mortality analysis is discussed at length in the criteria document, the staff paper, and the addenda to these documents. The 1982 criteria document found that in the context of historical London exposures, these data indicate clear increases in daily mortality occurred with BS and SO_2 concentrations in excess of 1000 μg/m³ with some indications of likely increases in daily mortality at levels of both pollutants in the range of 500 μg/m³ or more (CD, Table 14-7). These original conclusions on likely effects levels, based largely on the Martin and Bradley (1960) and Ware et al. (1981) analyses, appear reasonably consistent with the original assessment of these data by the original British investigators and the 1969 criteria document. From the re-examination of these data by Ware et al. (1981) and the analysis of subsequent London winters by Mazumdar et al. (1981), the criteria document also concluded small increases in daily mortality might occur at levels below 500 μg/m³. The more recent analyses of these data by Mazumdar et al. (1982), Ostro (1984), and Shumway et al. (1983) all serve to reinforce the possibility that effects were associated with particulate matter at concentrations below 500 μg/m³. A number of commenters, however, including some of the original British investigators (Holland et al., 1985), object to this latter suggestion.

studies and the various criticisms of them submitted as comments on the proposal. In order to respond fully to these criticisms, EPA conducted more sophisticated reanalyses of the original London data to further determine the degree of reliance that can be placed on the published results (Schwartz and Marcus, 1986, CDA, Appendix A). Each of these studies does suffer from limitations and uncertainties delineated in EPA's updated assessment (SPA pp. 17–23; 39–44); these limitations preclude definitive conclusions with respect to causality as well as identification of clear "no observed effects" levels. Nevertheless, EPA maintains its original interpretation, supported by its external science advisors, that these data at least suggest the possibility of effects of particulate matter at BS levels as low as 150 $\mu g/m^3$ and possibly even lower. None of the difficulties in statistical methodology or alternative mechanisms cited by commenters provide an adequate explanation for the consistent finding of association between particulate pollution and mortality at levels below 500 $\mu g/m^3$3 (as BS). The association was found for the majority of 14 winters (analyzed individually) spanning a period when pollution in London and indoor heating practices showed marked changes, and including winters in which BS levels did not exceed 250 $\mu g/m^3$. The relative consistency of the results from year-to-year despite these changes suggests that the observed effect is not explained by indoor air pollution or by long-term demographic shifts in the population. The findings were consistent among different investigators, and persisted after taking SO_2, temperature, and other weather variables into account, and after correcting for autocorrelation structure.

The principal arguments for the suggestion by some (including Mazumdar et al., 1982) that smoke may be acting as a surrogate for some more toxic pollutant or related non-pollution variable are: (1) The coefficients in the regression equations appear to increase with decreasing pollution across the 14 winters, (2) surrogate behavior is commonly observed in statistical analyses, (3) the work of Lawther suggests a threshold for morbidity at around 250 $\mu g/m^3$ as BS; hence mortality would not be expected at lower levels. While the possibility of surrogate behavior remains, the above arguments do not demonstrate that smoke acts as a surrogate for non-pollution variables. The trend toward higher coefficients with lower pollution Mazumdar and Ostro regressions. The existence of higher coefficients in later years, however, prompted these authors to suggest some plausible alternative to non-pollution surrogates, including: (a) The possibility that the composition of pollution changed with time, with an increase in more toxic components, and (b) because the gravimetric mass of particles in the range under 10 μm may not have declined as much as did the black carbon content detected in the smoke measurement (Lodge, 1988), coefficients related only to smoke might be expected to increase. An additional possibility suggested by Schwartz and Marcus is that the effect of higher pollution episodes in earlier winters was blunted by public awareness (and hence reduced exposure) or by a tendency for the most susceptible individuals to succumb on an early day of a multi-day pollution episode.

The use of the Lawther morbidity data as a threshold for mortality is questionable. The London mortality data involve an unequivocal endpoint in a relatively large population (several hundred per day) over a 14 year period. As pointed out by Roth et al. (1986), although the bronchitic population studied was clearly susceptible, the effects indicator used by Lawther was a relatively insensitive one. Moreover, the threshold was determined not by rigorous analysis, but by visual examination of strip chart data. Although the principal author strongly objects (Lawther, 1982), the criteria document points out that the data do not clearly indicate an effects threshold at 250 $\mu g/m^3$. Furthermore, the simple correlation results provided by Lawther et al. (1970) suggest the possibility that a more sophisticated analysis jointly incorporating pollution and weather factors might have found increased morbidity occurring at lower levels. The recent findings of small changes in pulmonary function at lower particulate matter levels in the U.S. and the Netherlands (See Table 1) support the notion that 250 $\mu g/m^3$ (in this case as PM_{10}) is not a reliable effects threshold.

Comments: The derivation of the proposed range of levels for the annual primary standard is without scientific basis. In particular, limitations in the two major series of studies used preclude finding effects of particulate matter at the lower TSP levels shown. In addition, the conversion of the results of these studies to PM_{10} uses an inappropriately low PM_{10}/TSP ratio.

Agency Response: EPA's assessment of studies used to derive the range of levels for the primary standard (Ferris et (CD, pp. 14–44 to 46 and SP, pages 61–62 and 104 –107) was reviewed by CASAC and found to be an appropriate basis for developing revised standard levels (Friedlander, 1982). The assessment clearly points out the limitations and strengths associated with the uses of these studies.

The Ferris et al. work (See Table 2 above) involved a "longitudinal" tracking of lung function and respiratory illness in adults vs. pollution over a 12 year period in Berlin, NH, a small town in which a pulp mill was a major pollution source. As commenters note, the "effects likely" level drawn from the first year of this study is particularly uncertain, as it is based on very limited aerometry. This level, however, was not important in developing the range for the proposed standard. Because of the seriousness of the effect (a prolonged decrement in lung function), the by then decreased concentration observed in the first followup study (130 $\mu g/m^3$ as TSP), was used in developing the upper bound of the range of proposed annual standards. This concentration was based on a full year of monitoring. Based on the historical record, there can be little doubt that pollution declined in this community from 1961 to 1967, the year of the first follow-up. The nature of the particular pollution source (a pulp mill) in this study, together with a finding of very low British smoke level, indicates that a variety of particles, not just products of combustion, may be associated with adverse effects. Although commenters have suggested that other pulp mill emissions may have been responsible for the effects, ambient levels of the gaseous effluents from such sources (reduced sulfur compounds and SO_2) have not been shown to cause reduced lung function.

Estimating PM_{10} levels from this study by using typical national average PM_{10}/TSP ratios does not—as some commenters argued—clearly understate PM_{10} levels. These commenters argued that high PM_{10}/TSP ratios (e.g., 0.8) should be used because sites in the eastern U.S. tend to have higher ratios. The data on PM_{10}/TSP ratios, however, also show a general tendency for lower ratios to occur in industrialized areas with high TSP concentrations (Pollack, et al., 1985). Moreover, air quality measurements taken in the 1960's document the presence of substantial quantities of larger size particles, as evidenced by high dust fall levels and low soiling indexes (Kenline, 1962). The latter author concludes that ... would be expected "if the majority of particles present had diameters of 10 microns or

greater . . . ." EPA therefore believes that the use of ratios characteristic of industrialized areas with high particle concentrations is justified and does not contribute to any excess margin of safety in the estimated effects levels.

The Bouhuys et al. (1978) study (see Table 2 above) was used to set the lower bound for the proposed standard range, which is the level at which the final standard is being promulgated. The study found a difference in three of five respiratory symptoms but no differences in lung functions between two Connecticut towns (Ansonia and Lebanon) that had a historically large (but currently small) difference in levels of particulate matter. Although the authors believed that air pollution did not play a role in the observed differences in symptoms, the data presented do not demonstrate that the differences were due solely to other factors associated with the conduct of the study. Moreover, the finding of excess respiratory symptoms unaccompanied by a persistent change in lung function is not unique. Similar findings were also obtained in the Ferris (1973) follow up study and the more recent six city study results (Ware et al., 1986).

Some commenters argued that the estimated TSP levels derived for the Bouhuys study were too low. EPA disagrees. The staff took the median TSP values reported by Bouhuys et al. over the previous several years as the relevant exposure level for this study because (1) the current gradient in pollution appeared to be too small to result in such effects, and (2) it is unreasonable to attribute all of the observed gradient in effects among urban and rural residents, as measured in 1973, to the maximum historical concentrations reported 8 to 10 years prior to that time. EPA's position is supported by the observations of Ferris et al. (1973, 1976), which show an apparent measurable reduction in symptoms and improved lung function after only a five to six year decline in pollution. This decline suggests that any gradient in effects due to pollution eight to ten years ago would be diminished relative to effects that may be associated with the more recent past. The median value used by EPA for the Bouhuys study is, in fact, also relatively close to the weighted average of all TSP observations reported for Ansonia for the seven years preceding the Bouhuys et al., (1978) measurements, which were taken in 1973 (Lounsbury, 1986).

The approach used to convert the TSP measurements in this study to PM_{10} equivalents was also questioned. The staff rejected use of the limited (15 days) particle size data for Ansonia as unrepresentative because of questions concerning their quality and because they were taken in 1973, after particulate matter concentrations had been reduced to lower levels (SP, p. 82). Absent reliable site-specific particle size data, the staff used the median PM_{10}/TSP ratio seen at other sites in the eastern U.S. with higher than average PM_{10} levels. Because the long-term ratio can vary between 0.3 and 0.65 among such sites, such estimates are admittedly uncertain. Nevertheless, the staff examination of historical air quality and source data associated with the Bouhuys et al. study found no factors that would make the ratio unusually high or low relative to other high concentration sites in the eastern U.S. The analysis by Spengler et al. (1986) of trends in particle size ratios from the 1970's to the present in six eastern cities suggests that the ratio of PM_{10} to TSP in early years with higher TSP levels tends to be comparable to or somewhat lower than the current ratios.

The basis for the final ambient standard is considerably strengthened by the recent results from the six-cities study (Ware et al., 1986). This work also suggests an increased risk of respiratory illness and symptoms, but no differences in lung function, in children across a gradient of pollution that extends to concentrations below those observed in the previous studies. The results are therefore qualitatively consistent with both of the earlier studies. In addition, the associated aerometry permits substantially better estimates of historical PM_{10} data. Taken together, these studies provide substantial support for an annual standard of 50 $\mu g/m^3$.

3. Margin of Safety

Comments: The Agency has incorporated an unrecognized three-fold margin of safety in the 24-hour standards through the means used to convert British Smoke measurements into PM_{10}.

Agency Response: British Smoke measurements collect particles smaller than about 4.5 microns in diameter ($PM_{4.5}$) on a substrate and then measure their absorption of light. Because the measurement depends on light absorption, it is sensitive only to the dark, "sooty" component of the particulate matter. EPA has relied on gravimetric calibrations, performed during the earlier years of the mortality and morbidity studies, that related the British Smoke measurements to particulate mass concentrations that included light-colored as well as dark particles.

The commenters note that the dark, sooty component of the particulate matter in London today constitutes only 40% as large a fraction of the total particulate mass as it did during the period of the studies on which EPA has relied. They argue that the use of those studies to set standards for contemporary particulate pollution therefore introduces an error of a factor of 2.5 (1/0.4). Multiplying this by a typical ratio of PM_{10} to $PM_{4.5}$ of 1.2 (Lodge, 1986), the commenters arrive at an alleged error of a factor of three arising from the Agency's use of the British Smoke measurements.

The commenters rely on the unstated assumption that it is only the dark fraction of particulate pollution that affects human health, and that, since the dark fraction has declined since the time of the studies, the particulate matter in the atmosphere today is less dangerous than that present at the time of the studies. EPA disagrees with this assumption and believes that a more plausible and prudent assumption is that effects on health depend on the mass concentration of particles and not on their color.

Although it is possible that dark, carbonaceous particles were primarily responsible for the observed effects on human health in the London studies, this has not been documented, and there is no evidence to support the assumption that light-colored particles have no significant effect on human health. EPA staff has compared the composition of particulate matter in historical London and in the current U.S. and has concluded that, given the variety of particle types present in the U.S., there is no clear basis for imputing higher acute toxicity to the historical London particles (SP pp. 21–22, 100).

The commenters support their argument with the assertions that the decrease in the dark, sooty fraction of particulate matter in London has been accompanied by the elimination of pollution-related health effects, and that current excursions of fine particle mass in excess of 250 $\mu g/m^3$ have not been associated with health effects in London or elsewhere. EPA finds these assertions to be unsupported. The studies of mortality in London over a 14-year period of declining pollution from 1958 through 1971 found that the relationship between pollution and mortality persisted throughout the period and that, in fact, the regression coefficients assigned to mortality appeared to increase over the period. (Mazumdar et al., 1982; Ostro, 1984). Moreover,

continuing studies in the contemporary U.S. and Europe have suggested health effects at PM_{10} levels below 250 $\mu g/m^3$ (Dockery et al., 1982; Ozkaynak and Spengler, 1985; Dassen et al., 1986).

For these reasons, EPA concludes that it is reasonable and prudent to use the mass concentration estimates derived from historical British Smoke measurements to set ambient standards for current U.S. atmospheres under the assumption that current U.S. particles are equal in toxicity to those found in London at the time of those measurements. Any margin of safety inherent in the British Smoke/PM_{10} conversion for the earlier years when gravimetric calibrations were available is more likely to be on the order of a factor of 1.2 (the ratio of $PM_{4.5}$ to PM_{10} estimated by Lodge, 1986) rather than the factor of three suggested by the commenters. For particulate levels lower than those observed in the earlier years, EPA has supplemented the London studies with the more contemporary American and European studies using direct gravimetric measurements.

Comments: Several commenters expressed concerns that the margin of safety for the range of levels proposed for the 24-hour standard is insufficient. Commenters based these concerns on: (a) Calculations suggesting that even the lower bound may be less stringent than the current standards, (b) evidence from the more recent studies of lung function decrements in children and the analyses of London mortality data, and (c) various studies found to be mainly of qualitative value. In general, such commenters felt that, in view of the available evidence, the standard should be set at levels at or below the lower bound of the proposed ranges.

Agency Response: The overriding consideration in selecting a standard is how well it protects public health, not its relative stringency as compared to the previous standard. EPA believes that standards chosen provide an adequate margin of safety irrespective of the relationship to the former TSP standards. Nevertheless, EPA has compared the stringency of the revised standards with that of the existing standards by estimating the number of areas that would be expected not to attain each set of standards. By this measure, the new PM_{10} standards are equivalent to or somewhat more stringent than the TSP standards (SP, Table 2-1). Commenters who calculated or asserted otherwise often did not take all of the aspects of the standards into account. The margin of safety is a function not only of level, but also of the indicator and form of the standards. The revised form, in particular, makes direct comparison of the relative stringency of proposed range with the current TSP standard inappropriate.

EPA agrees that the analyses of mortality in London justify caution in selecting a 24-hour standard level, and that the recent studies of lung function provide a useful basis for selecting the level. EPA does not, however, believe that these studies compel a standard more stringent than the one chosen. As discussed in Section III.C.1 above, uncertainties in estimating PM_{10} equivalents of low British Smoke concentrations in the later years of the London studies make it difficult to use the studies to set a precise level for a PM_{10} standard. Therefore, it is important to examine the more contemporary studies of lung function that permit a more direct estimation of PM_{10} effects levels. In considering these studies in conjunction with the London mortality and other relevant health studies, EPA finds that a 24-hour standard of 150 $\mu g/m^3$ provides an adequate margin of safety. EPA does not agree with commenters suggestions that it is necessary to prevent any detectable changes in lung function. As discussed in Section III.C.1, a standard of 150 $\mu g/m^3$ will clearly prevent lung function decrements that might be considered to be indicative of adverse effects in well over 95% of children exposed; in fact the evidence suggests that even reversible lung function changes ($FEV_{0.75}$) in excess of 10% are unlikely at this level. EPA therefore believes that the standard provides an adequate margin of safety.

Some commenters favoring standards below the lower bounds of the proposed ranges relied on studies or analyses found by EPA and CASAC to be of little quantitative value for establishing ranges of concern. EPA considered a number of such studies in selecting a margin of safety (e.g., SPA 52–53; SP 109–111), but in EPA's judgment they do not provide a sufficient basis for establishing standards at levels below those derived from the more quantitative studies summarized in Tables 1 and 2 above.

Comments: Some commenters argued that in selecting annual standards much greater weight be given to the results of Ware et al. (1986), which suggest a possible gradient of effects at concentrations extending to the lowest levels observed in the six cities studied (25 $\mu g/m^3$).

Agency Response: EPA disagrees. EPA staff found that the pollution and effects gradient in the three cleanest cities to be too small to provide any strong suggestion of effects at such levels. Moreover, the lack of consistency for "within city" effects in this study argue against placing undue reliance on the suggestion of effects at levels outside of the range suggested by the other long-term studies of interest (Ferris et al., 1973, 1976, Bouhuys et al., 1978). In addition, the 24-hour standard provides an increased margin of safety against annual exposures at levels below 50 $\mu g/m^3$, in areas where long-term exposures are dominated by repeated short-term peaks (Freas, 1986).

B. Secondary Standards

1. Soiling and Nuisance

Comments: The Agency should maintain a secondary TSP standard. Some commenters felt that the proposed secondary annual TSP standard is inadequate, and that the current 24-hour TSP standard should be retained.

Agency Response: As discussed in Section IV.A. above, the CASAC found little scientific support for maintaining a secondary TSP standard. It follows that little data exist to support maintaining the present level or an alternative level for a 24-hour standard designed to protect against soiling and nuisance. Nevertheless, the changes made in the final standard result in both a 24-hour and annual secondary PM_{10} standard. Analysis of the relative protection afforded by the 24-hour PM_{10} standard indicate that it is relatively more stringent than the upper portion of the proposed range for an annual TSP standard. Thus, the final standards should provide more protection than that afforded by the proposed TSP alternative toward which the Administrator was initially inclined. As detailed above, the data do not provide convincing evidence of significant soiling and nuisance effects at concentrations below that permitted by the primary standards.

2. Visibility

Comment: A secondary fine particle standard is needed to protect against visibility impairment and related effects.

Agency Response: The Administrator deferred judgment with respect to a secondary fine particle standard in order to examine the relationship between control programs for regional visibility and the related problems of acid deposition. The initial phase of that examination has now been completed (EPA, 1985). Based on the available information, the Administrator has decided to issue an Advance Notice of Proposed Rulemaking on a secondary fine particle standard in a separate notice in today's Federal Register.

C. Averaging Time and Form of the Standards

1. Expected Exceedances for the 24-hour Standard

Comment: Several commenters were opposed to the proposed statistical form and either favored the current simpler deterministic form or preferred a multiple exceedance or percentile form of the 24-hour standard. Others supported the proposal to adopt a single expected exceedance statistical form. Many of the opposing commenters were concerned that the adjustment for incomplete sampling could cause areas with less than one actual exceedance per year to be misclassified as nonattainment and that the method is sensitive to spurious high concentrations. Those in favor of adopting a single exceedance statistical form recognized the need to account for missing data and argued that this form provides proper health protection.

Agency Response: EPA has carefully reviewed these comments and has decided to maintain the basic proposed statistical form for the 24-hour standard but has made some technical changes and clarifications in response to reviewers comments. The Agency believes that a single exceedance form for the primary standards and the proposed adjustments for incomplete sampling appropriately reflect the health basis for the standard. When sampling is performed less frequently than every day, the number of observed exceedances of the standard level will obviously be, in general, fewer than the actual number of exceedances. If, for example, sampling is performed only every sixth day, as is permitted by the Air Quality Surveillance regulations (40 CFR Part 58) being promulgated today, then, on average, the number of observed exceedances will only be one-sixth of the actual number of exceedances. To fail to correct for this effect would be irrational and would seriously degrade the health protection afforded by the standards. The Agency believes that adequate procedures for handling spurious high concentrations are provided in the "Guideline on the Identification and (Use of Air Quality Data Affected by Exceptional Events", EPA-450/4-86-007. Moreover, single high concentrations will not necessarily cause a location to fail the test for attainment. Appendix K has been modified so that the first observed exceedance is not adjusted for incomplete sampling. If the sampling frequency is promptly increased to every day in accordance with 40 CFR Part 58.13. Accordingly, sites sampling once in six days must observe at least two exceedances in order to fail the test for attainment. Sites sampling every other day or every day must record three or four exceedances over a three-year period in order to fail the test. This change reduces the chances for misclassifying a site as nonattainment.

Although a multiple exceedance form of the 24-hour standard could reduce sampling requirements, such a form would reduce the level of health protection by allowing particulate levels to exceed, on multiple days, the levels that the Administrator has determined to pose an unacceptable health risk. An analysis of alternative numbers of exceedances found that, in the long run, the single exceedance form provided much more consistent health protection than did the percentile form recommended by some commenters (Biller, 1984; 1986).

In response to comments regarding the potential for seasonal variation in particulate matter concentrations, as well as possible intrayear changes in sampling frequency as described in Part 58 of this Chapter, the Agency has decided to require that adjustments for incomplete sampling be performed on a quarterly basis instead of a yearly basis.

2. Expected Arithmetic Mean for the Annual Standard

Comment: Many commenters favored retaining the geometric mean to describe annual average particulate matter concentrations but several supported the proposed use of the arithmetic mean. Those opposed to the proposed method noted that the geometric mean is a more stable statistic and is less sensitive to occasional high readings. In addition, opposing commenters were concerned that a change to an arithmetic mean increases the stringency of the annual standard and that the arithmetic mean does not properly relate to health effects.

Response: As discussed above, EPA has decided to adopt annual primary and secondary standards in terms of expected annual arithmetic mean PM_{10}. The Agency believes that the annual arithmetic mean is a more appropriate indicator for a long-term primary air quality standard than is the geometric mean. It provides a better estimate of total exposure and, with its multiple-year averaging, more appropriately takes into account year-to-year fluctuations in meteorology. As discussed in the rationale, the effect of averaging multiple years of data in order to estimate the expected annual value as well as the use of the arithmetic mean were both considered in setting the concentration level of the standard. The use of the arithmetic mean does not necessarily increase the stringency of the standard level; the stringency depends at the combination of the form, indicator, and level. Holding all else equal, however, the arithmetic form is relatively more protective in areas subject to multiple elevations in 24-hour concentrations. EPA views this as a desirable characteristic.

VII. Regulatory and Environmental Impacts

A. Regulatory Impact Analysis

Under Executive Order 12291, EPA must judge whether a regulation is a "major" regulation for which a Regulatory Impact Analysis (RIA) is required. At the time of the proposal, the Agency judged the proposed revisions to the particulate matter NAAQS to be a major action, and made available to the public a draft analysis entitled: Regulatory Impact Analysis of the National Ambient Air Quality Standards for Particulate Matter—Draft (EPA, 1983). The draft RIA was based on information developed by several EPA contractors (inter alia., Argonne, 1983; Mathtech, 1983) and provided estimates of costs, benefits, and net benefits associated with alternative standards.

In announcing the availability of the draft RIA, the Agency stated that neither the RIA nor the contractors' reports were considered in developing the proposed revisions. Subsequent to the release of the draft RIA, the public and other governmental agencies raised a number of questions regarding the underlying data bases and analyses discussed in the draft RIA. In response to these questions, the Agency modified the cost model used and made other, more limited, changes to the benefits analyses. The number and extent of the changes were constrained, however, by the underlying model structure and the available data. The Agency has carefully evaluated the revised analysis and has concluded that despite the significant improvement made, fundamental questions remain with regard to certain aspects of the methodology used, particularly with respect to the emission reduction/air quality improvement relationship which affects the subsequent cost and benefit calculations. Consistent with its past practice, the Agency has not considered the final Regulatory Impact Analysis of National Ambient Air Quality Standards for Particulate Matter (EPA, 1986c) in reaching decisions on the final standards.

The final RIA has been submitted to the Office of Management and Budget (OMB) for review under Executive

Other Actions. Comments from OMB and EPA's responses to those comments have been placed in the docket.

Reporting Requirements

This final rule does not contain any information collection requirements subject to OMB review under the Paperwork Reduction Act of 1980 U.S.C. 3501 *et seq.*

B. Impact on Small Entities

Under the Regulatory Flexibility Act, 5 U.S.C. 600–612, EPA must prepare initial and final regulatory flexibility analyses that assess the impact a proposed or final rule will have on small entities, which include small businesses, small not-for-profit enterprises, and governmental entities with jurisdiction over populations of less than 50,000. The requirement of preparing such an analysis is waived, however, if the Administrator certifies that the rule will not have a significant economic impact on a substantial number of small entities.

The national ambient air quality standards do not have a direct impact on small businesses or enterprises because the standards themselves do not contain emission limits or other pollution controls. Rather, such controls are contained in State implementation plans promulgated under section 110 of the Act, 42 U.S.C. § 7410. The States are given considerable discretion in selecting a mix of controls to attain and maintain the ambient standards, and the impact on small entities depends on how the States choose to exercise their discretion.

Nonetheless, EPA conducted an analysis of the impact of a hypothetical control strategy, designed to minimize costs, on entities in the industries that would be most affected under that hypothetical control strategy. That analysis, discussed in the notice of proposed rulemaking, 49 FR at 10422, indicated that less than 20% of the entities in those industries would be affected by the proposed standards.

During the public comment period, EPA received no comments on the regulatory flexibility analysis. On the basis of that analysis, the Administrator certifies that the revisions being promulgated today will not have a significant impact on a substantial number of small entities.

VIII. Other Reviews

This final rule was submitted to the Office of Management and Budget (OMB) for review. Comments from OMB and EPA's responses to these comments have been placed in the docket.

List of Subjects in 40 CFR Part 50

Air pollution control, Carbon monoxide, Ozone, Sulfur oxides, Particulate matter, Nitrogen dioxide, Lead.

Dated: June 2, 1987.

Lee M. Thomas,

Administrator.

References

AMC [American Mining Congress] (1982). American Mining Congress Position Paper on Particle Size Issue. American Mining Congress, Washington, DC. June 17, 1982. Docket #A–79–28, II–D–61a.

Anjonne (1983). Costs and Air Quality Impacts of Alternative National Ambient Air Quality Standards for Particulate Matter. Technical Support Document, prepared for U.S. EPA, Ambient Standards Branch, Research Triangle Park, NC. January 1983. Docket #A–79–28, II–A–35.

Biller, W.F. (1984). Investigation of PM_{10} National Ambient Air Quality Standards Based on Multiple Exceedances. Prepared for Strategies and Air Standards Division, Office of Air Quality Planning and Standards, U.S. Environmental Protection Agency, Research Triangle Park, NC; contract no. 68–02–3875. Docket #A–82–37, IV–A–2.

Biller, W.F. (1986). Letter to Henry C. Thomas, U.S. EPA, Office of Air Quality Planning and Standards. Re: Multiple Exceedance PM Standards. December 18, 1986. Docket #A–82–37, IV–D–344.

Booz, Allen and Hamilton, Inc. (1970). Study to Determine Residential Soiling Costs of Particulate Air Pollution. APTD–0713, U.S. Department of Health, Education and Welfare, National Air Pollution Control Administration, Raleigh, NC.

Bouhuys, A., G.J. Beck, and J.B. Schoenberg (1978). Do present levels of air pollution outdoors affect respiratory health? Nature 276: 466–471.

Carey, W.F. (1959). Atmospheric deposits in Britain: A study of dinginess. Int. J. Air Poll. 2:1–28.

Dassen, W., B. Brunekreef, G. Hoek, P. Hofschreuder, B. Staatsen, H. deGrout, E. Schouten, and K. Bierstekar (1986). Decline in children's pulmonary function during an air pollution episode. J. Air. Pollut. Control Assoc. 36: 1223–1227.

DHEW [U.S. Department of Health, Education, and Welfare] (1969). Air Quality Criteria for Particulate Matter. U.S. Government Printing Office, Washington, DC. AP–49.

DHEW (1973). Prevalence of Selected Chronic Respiratory Conditions, United States–1970. DHEW Publication No. (HRA) 74–1511. Series 10, Number 84, Rockville, MD.

Dockery, D.W., J.H. Ware, B.G. Ferris, Jr., F.E. Speizer, N.R. Cook, and S.M. Herman (1982). Change in pulmonary function in children associated with air pollution episodes. J. Air Pollut. Contrl. Assoc. 32:937–942.

EPA [U.S. Environmental Protection Agency] (1982a). Review of the National Ambient Air Quality Standards for Particulate Matter: Assessment of Scientific and Technical Information-OAQPS Staff Paper. Office of Air Quality Planning and Standards, Research Triangle Park, NC. EPA–450/5–82–001.

EPA (1982b). Air Quality Criteria for Particulate Matter and Sulfur Oxides. Environmental Criteria and Assessment Office, Research Triangle Park, NC. EPA–600/8–82–029a–c.

EPA (1983). Regulatory Impact Analysis on the National Ambient Air Quality Standards for Particulate Matter. Office of Air Quality Planning and Standards, Research Triangle Park, NC.

EPA (1985). Developing Long-term Strategies for Regional Haze: Findings and Recommendations of the Visibility Task Force. Research Triangle Park, NC.

EPA (1986a). Second Addendum to Air Quality Criteria for Particulate Matter and Sulfur Oxides (1982): Assessment of Newly Available Health Effects Information. Environmental Criteria and Assessment Office, Research Triangle Park, NC. EPA 600/8–86–020–F.

EPA (1986b). Review of the National Ambient Air Quality Standards for Particulate Matter: Updated Assessment of Scientific and Technical Information. Office of Air Quality Planning and Standards, Research Triangle Park, NC. EPA–450/5–86–012.

EPA (1986c). Regulatory Impact Analysis of the National Ambient Air Quality Standards for Particulate Matter, Second Addendum. Office of Air Quality Planning and Standards, Research Triangle Park, NC.

Ferris, B.G., Jr. and D.O. Anderson (1962). The prevalence of chronic respiratory disease in a New Hampshire town. Am. Rev. Respir. Dis. 86: 165–177.

Ferris, B.G., Jr., I.T.T. Higgins, M.W. Higgins, and J.M. Peters (1973). Chronic non-specific respiratory disease in Berlin, New Hampshire, 1961–1967. A follow-up study. Am. Rev. Respir. Dis. 107:110–122.

Ferris, B.G., Jr., H. Chen, S. Puleo, and R.L.H. Murphy, Jr. (1976). Chronic non-specific respiratory disease in Berlin, New Hampshire, 1967–1973. A further follow-up study. Am. Rev. Respir. Dis. 113:475–485.

Freas, W. (1986). Summary of PM_{10} Probability Simulation Results. Memorandum to John Bachmann, Ambient Standards Branch, December 10, 1986. Docket #A–82–37, IV–B–15.

Friedlander, S.K. (1982). CASAC Review and Closure of the Staff Paper for Particulate Matter. Memorandum to EPA Administrator Anne M. Gorsuch, January 1982. Appendix E in Docket Item A–79–28, II–A–3.

Haines, J.H. (1987). Reanalysis of the Booz, Allen, and Hamilton Soiling Data. Memorandum to John Bachmann, Ambient Standards Branch, Jan. 8, 1987. Docket #A–82–37, IV–A–4.

Hancock, R.P., N.A. Esmen, and C.P. Furber (1976). Visual response to dustiness. J. Air Pollution Control Association 26:54–57.

Hausman, J.A., B.D. Ostro, and D.A. Wise (1984). Air Pollution and Lost Work, Cambridge, MA: National Bureau of Economic Research, NBER Working Paper no. 1263.

becomes available and its review is completed.

Major Scientific Issues and CASAC Conclusions in the SO_x/PM Criteria Document Review

Chapter 1: Executive Summary.

In general, the revised draft Executive Summary critically synthesizes the key points of information discussed at length in the individual chapters. Its conclusions and interpretations of scientific data, studies, and issues are consistent with those presented in each chapter. Relationships among individual chapters are clearly defined; redundancies that do appear are reasonable given the complexity of the subject.

The quality of the Executive Summary would be further improved if more specific statements and/or tables were added to clarify certain important interrelationships. These include the differences in chemical composition associated with each of the several significant size ranges of particulate matter and the health effects associated with the respiratory tract deposition patterns of particulate matter in the several size ranges and different chemical compositions. Quantitative health effects information useful in defining specific concentrations or ranges of concentrations of size-specific and/or chemical specific PM associated with the occurrence of health effects should also be highlighted. In view of evidence that total thoracic (tracheobronchial and alveolar) particle deposition is of public health concern, it would also be helpful to include a discussion of the likely equivalency among British Smokeshade (BS), Total Suspended Particles (TSP), and size selective particle aerometric measurements that would sample or index atmospheric concentrations of those sized particles identified with tracheobronchial or alveolar deposition.

Chapter 2: Physical and Chemical Properties of SO_x/PM.

This chapter is well written and addresses the important issues relevant to a criteria document. It presents a good summary of current knowledge of the factors affecting the physics and chemistry of sulfur dioxide and the pathways and kinetics of its transformation into sulfuric acid. It also provides a good summary of particle characteristics, dynamics, and hygroscopic growth.

Chapter 3: Techniques for the Collection and Analysis of SO_x/PM.

The revised chapter provides an excellent summary of the measurement of sulfur oxides and particulates. Especially important is the discussion of the capabilities of the various measurement techniques and the profile of pollutants in the ambient air which these measurements yield. The chapter correctly notes that British Smoke (BS), Coefficient of Haze (COHS), and Total Suspended Particulate (TSP) measurements do not adequately reflect key physical or chemical properties of particulate matter in the contemporary ambient air. Precise interconversion among units of BS, COHS, and TSP is not possible. In the context of a particulate standard, British Smoke is applicable only to a "sooty" smoke aerosol. It may not be a valid health effects indicator for the aerosol compositions observed in recent summertime episodes in the United States and Europe. Thus, it is unlikely that BS can provide a sensitive index of hazard for today's air pollution.

Chapter 4: Sources and Emissions.

Both natural and man-made sources emit sulfur dioxide and particulate matter into the ambient air. Given the limitations of our ability to derive reliable estimates from both types of sources, the criteria document presents an adequate discussion of current knowledge.

Chapter 5: Environmental Concentrations and Exposure.

This chapter is largely acceptable in its present form. Most of the comments and suggestions which were made for previous drafts have been effectively incorporated. The most important omission from the chapter is information related to chemical composition with respect to particle size. Abundant information of this type is available for sulfates and some trace metals. Given the strong dependence of deposition rates and light scattering on particle size, it might have been worthwhile to refer to this literature in Chapter 5 or to direct attention to other document chapters (e.g., Chapter 2) where such relationships are discussed.

Chapter 6: Atmospheric Transport, Transformation and Deposition.

This chapter is concise, well-written, and effective in communicating information related to the current status of mathematical models for air pollution. The utility of various models is clearly discussed, and the inadequacy of current models for quantitative extrapolation is pointed out. Topics which had been omitted from the previous draft of this chapter have been added to other chapters with overlapping content. The chapter is now acceptable as written.

Chapter 7: Acidic Deposition.

The Committee has recognized the desirability of incorporating existing information on acidic deposition in the present criteria document. Chapter 7 provides an abbreviated but adequate summary of the contribution of sulfur oxides and particulates to the formation, transport, and effects of acidic deposition. The Committee has concluded that Chapter 7 is a scientifically adequate summary with the conditional understanding that EPA is preparing a Critical Assessment Document for Acidic Deposition for its review that recognizes and incorporates information on causes, effects, and data bases for all of the various pollutants relevant to acidic deposition. CASAC has been briefed several times by Agency officials regarding the status of this document. The Committee looks forward to the submission of this integrated assessment for its critical review.

Chapter 8: Effects on Vegetation.

In response to CASAC recommendations and public comments, this chapter on vegetation effects has been greatly improved compared to earlier drafts reviewed by the Committee. It now includes a more concise and interpretive critical evaluation of those few key studies yielding quantitative dose-effect or dose-response information of most use for criteria development and standard-setting purposes. It also reasonably includes tables in the appendices which summarize studies of particulates and sulfur dioxide related vegetation effects that are of less utility for criteria development and standard setting.

The Committee concurs with Chapter 8 evaluations which point to the lack of dose-response data to establish quantitative evidence of deleterious effects on vegetation from particulates at presently encountered U.S. ambient air concentrations. In contrast to particulates, much clearer evidence exists by which to define quantitative exposure-effect relationships for sulfur dioxide effects on vegetation. Laboratory experiments in particular have demonstrated the greater relative toxicity to vegetation from high short-term exposures of sulfur dioxide. This is especially important in view of the fact that ambient air concentrations of sulfur dioxide from point sources often fluctuate widely and result in high intermittent short-term exposures of plants to sulfur dioxide concentrations against a background of longer-term but much lower annual average sulfur dioxide levels. Also of much importance are differences in the relative sensitivity of various plant species to sulfur dioxide exposures. The degree of sensitivity depends in part on factors such as phase of growth at time of exposure, ambient

Holland, W.W., R.E. Waller, and A.V. Swan (1983). Letter to Lester Grant, U.S. EPA, Environmental Criteria Assessment Office, July 14, 1983. Docket #A-79-28, II-D-105.

Holland, W.W., C. Florey, P.J. Lawther, and A.V. Swan (1985). Letter to John Haines, U.S. EPA, Office of Air Quality Planning and Standards, May 28, 1985. Docket #A-82-37, IV-D-347.

ISO [International Standards Organization] (1981). Size definitions for particle sampling. Am. Ind. Hyg. Assoc. J. 42:64-68a.

Kenline, P. (1962). In quest of clean air for Berlin, New Hampshire. U.S. Department of Health, Education and Welfare, R.A. Taft Sanitary Engineering Center, Cincinnati, Ohio.

Lawther, P.J., R.E. Waller, and M. Henderson (1970). Air pollution and exacerbations of bronchitis. Thorax 25:525-539.

Lawther, P.J. (1982). Letter to John Bachmann, U.S. EPA, Office of Air Quality Planning and Standards, February 26, 1982. Docket #A-79-28, II-D-76.

Lawther, P.J. (1986). Letter to John Bachmann, U.S. EPA, Office of Air Quality Planning and Standards, August 22, 1986. Docket #A-82-37, IV-D-318.

Lippmann, M. (1986a). Letter from Morton Lippmann, CASAC Chairman, to EPA Administrator Lee Thomas, January 2, 1986. Docket #A-82-37, IV-D-315.

Lippmann, M. (1986b). Letter from Morton Lippmann, CASAC Chairman, to EPA Administrator Lee Thomas, December 15, 1986. Docket #A-82-37, IV-D-339.

Lippmann, M. (1986c). Letter from Morton Lippmann, CASAC Chairman, to EPA Administrator Lee Thomas, December 18, 1986. Docket #A-82-37, IV-D-338.

Lodge, J.P. (1986). A rational basis for national ambient air standards for particulate matter. Aerosol Sci. Tech. Vol 5 #4: 459-468.

Lounsbury, S. (1986). Long-term median TSP values from Ansonia, Connecticut. Memorandum to John Bachmann, Ambient Standards Branch, December 31, 1986. Docket #A-82-37, IV-B-12.

Lunn, J.E., J. Knowelden, and A.J. Handyside (1967). Patterns of respiratory illness in Sheffield infant school children. Br. J. Prev. Soc. Med. 21:7-16.

Martin, A.E., and W.H. Bradley (1960). Mortality, fog and atmosphere pollution—an investigation during the winter of 1958-1959. Mon. Bull. Minist. Health Lab. Serv. 19:56-73.

Mathtech, (1983). Benefit and Net Benefit Analysis of Alternative National Ambient Air Quality Standards for Particulate Matter, Volumes 1-6. Prepared for Economics Analysis Branch, Strategies and Air Standards Division, Office of Air Quality Planning and Standards, U.S. EPA, Research Triangle Park, N.C., Mathtech, Inc., Princeton, N.J. Docket #A-79-28, II-A-8.

Mazumdar, S., H. Schimmel, and I. Higgins (1981). Daily mortality, smoke and SO_2 in London, England 1959-1972. Proceedings of the Proposed SO_2 and Particulate Standard Specialty Conference. Air Pollution Control Association, Atlanta, Georgia.

Mazumdar, S., H. Schimmel, and I. T. Higgins (1982). Relation of daily mortality to air pollution: an analysis of 14 London winters, 1958/59-1971/72. Arch. Environ. Health 37:213-220.

Miller, F.J., T.B. Martonen, M.G. Menache, D.M. Spektor, and M. Lippmann (1986). Influence of breathing mode and activity level on the regional deposition of inhaled particles and implications for regulatory standards. Cambridge, United Kingdom: Inhaled particles VI: accepted for publication.

Ostro, B.D. (1984). A search for a threshold in the relationship of air pollution to mortality: a reanalysis of data on London winters. EHP Environ. Health Perspect. 58: 397-399.

Ostro, B.D. (1987). Air pollution and morbidity revisited: a specification test. J. Environ. Econ. Manage. 14(1): 87-98.

Ozkaynak, H. and J.D. Spengler (1985). Analysis of health effects resulting from population exposures to acid precipitation precursors. EHP Environ. Health Perspect. 63: 45-55.

Pace, T.G., U.S. EPA, Monitoring and Data Analysis Division (1983). The Use of TSP Data to Estimate PM_{10} Concentrations. Technical Memorandum to John Bachmann, Ambient Standards Branch, Research Triangle Park, N.C. Docket #A-79-28, II-B-19.

Pace, T.G., E.L. Meyer, N.H. Frank, and S.F. Sleva (1986). Procedures for Estimating Probability of Nonattainment of a PM_{10} NAAQS Using total Suspended Particulate or PM_{10} Data. U.S. EPA, Office of Air Quality Planning and Standards, Research Triangle Park, N.C. EPA-450/4-86-017.

Padgett, J., U.S. EPA, Strategies and Air Standards Division (1981). Letter to Dr. Sheldon Friedlander, Chairman, Clean Air Scientific Advisory Committee, October 30, 1981. Docket #A-79-28, II-C-3.

Pollack, A.K., A.B. Hudischewskij and A.D. Thrall (1986). An Examination of 1982-1983 Particulate Matter Ratios and Their Use in the Estimation of PM_{10} NAAQS Attainment Status. Systems Application, Inc., San Rafael, CA. U.S. EPA, Office of Air Quality Planning and Standards, Research Triangle Park, NC. EPA-450/4-85-010.

Roth, H.D., R.E. Wyzga, and A.J. Hayter (1986). Methods and Problems in Estimating Health Risks from Particulates in Aerosols. (S.D. Lee, T. Schneider, L.D. Grant, P.J. Verkerk, eds). Lewis Publishers, Chelsea, MI. pp. 837-857.

Schwartz, J.H. and A. Marcus (1986). Statistical Reanalyses of Data Relating Mortality to Air Pollution During London Winters 1958-1972. U.S. EPA, Research Triangle Park, N.C.

Shumway, R.H., R.Y. Tai, L.P. Tai, and Y. Pawitan (1983). Statistical analysis of daily London mortality and associated weather and pollution effects. Sacramento, CA: California Air Resources Board; contract No. A1-154-33.

Spengler, J.D., S.L.K. Briggs, and H. Ozkaynak (1986). Relationships Between TSP Measurements and Size-Fractionated Particle Mass Measurements in Six Cities Participating in the Harvard Air Pollution Health Study. Prepared for Office of Air Quality Planning and Standards, Office of Policy Analysis, U.S. Environmental Protection Agency, December 8, 1986.

Swift, D.L. and D.F. Proctor (1982). Human respiratory deposition of particles during oronasal breathing. Atmos. Environ. 16:2278-2282.

Ware, J., L.A. Thibodeau, F.E. Speizer, S. Colome, and B.G. Ferris, Jr. (1981). Assessment of the health effects of atmospheric sulfur oxides and particulate matter: evidence from observational studies. Environ. Health Persp. 41:255-276.

Ware, J.H., B.G. Ferris, Jr., D.W. Dockery, J.D. Spengler, D.O. Stram, and F.E. Speizer (1986). Effects of ambient sulfur oxides and suspended particles on respiratory health of preadolescent children. Am. Rev. Respir. Dis. 133: 834-842.

Watson, W.D. and J.A. Jaksh (1984). Production of Household Cleanliness in Polluted Environments. U.S. Department of the Interior, Geological Survey. Docket #A-82-37, IV-D-309.

Addendum I—CASAC Review and Closure of the 1982 Criteria Document for Particulate Matter/Sulfur Oxides and the 1986 Second Addendum to the Criteria Document

January 29, 1982.

Subject: CASAC Review and Closure of the Criteria Document for Sulfur Oxides/Particulate Matter

From: Sheldon K. Friedlander, Chairman, Clean Air Scientific Advisory Committee (CASAC)

To: Anne M. Gorsuch, Administrator

On November 16, 1981, the Clean Air Scientific Advisory Committee of the Science Advisory Board completed its third review of the air quality criteria document for sulfur oxides/particulate matter (SOx/PM). The Committee notes with satisfaction the improvements made in the quality of the document during the course of previous CASAC reviews on August 20-22, 1980 and July 7-8, 1981. The staff of the Environmental Criteria and Assessment Office, directed by Dr. Lester Grant, have proven responsive to Committee advice as well as to comments provided by the general public, and deserve to be commended for the high quality of the document.

The purpose in writing you is to summarize the Committee's major conclusions to assist you in reviewing the scientific data and associated studies relevant to the establishment of revised ambient air quality standards for sulfur dioxide and particulate matter as required by law. This letter further advises you of the Committee's conclusion that the criteria document fulfills the requirements set forth in Section 108 of the Clean Air Act as amended, which requires that the document "shall accurately reflect the latest scientific knowledge useful in indicating the kind and extent of all identifiable effects on public health or welfare" from sulfur oxides and particulates in the ambient air.

The Committee is preparing a separate letter to you summarizing the conclusions of its reviews of the Draft Staff Paper for Particulate Matter. In addition, CASAC will prepare a similar report on the Draft Staff Paper for Sulfur Oxides once that document

temperature and humidity levels, and plant water content. Among studies judged to be most useful for quantitative criteria development and standard setting are those of Dreistnger (1965, 1967) and Dreisinger and McGovern (1970) which demonstrate visible injury to white pine (a commercially important species in some U.S. areas) when natural stands of the tree in southern Canada were exposed for 4 hours to 0.30 ppm or for 8 hours to 0.25 ppm sulfur dioxide emitted from a nearby smelter. Roughly similar exposure-effect relationships were observed in studies reported by Jones et al. (1974) and McLaughlin (1981) on the effects of sulfur dioxide from a southeastern U.S. power plant on a wide variety of natural species in the vicinity of the point source. In these studies some crop and garden species showed visible injury effects with 3 hour exposures to 0.6–0.8 ppm sulfur dioxide, while certain other crop species (potato, cotton, corn, peach) did not show visible injury at levels below 0.8 ppm. In contrast, a chamber study by Hill et al. (1974) suggests that plants common to the southwestern U.S., with markedly lower moisture content and under generally lower ambient air humidity levels, may be able to withstand much higher ambient sulfur dioxide concentrations (up to 11 ppm for two hours) without visible injury.

Chapter 9: Effects on Visibility and Climate.

The technical aspects of this difficult problem are well characterized. The chapter does a good job of discussing the physics and public awareness of visibility. The relationship between fine particle mass concentrations and visibility has been well established. The criteria document thus provides an excellent technical basis for Agency decision-making on these issues.

Chapter 10: Effects on Materials.

This chapter adequately discusses the currently available scientific information concerning the effect of particulate matter and sulfur oxides on man-made materials. This includes critical assessments of available data concerning pertinent materials damage functions, uncertainties associated with existing characterizations of such functions, and limitations regarding estimation of monetary costs and/or benefits associated with the occurrence or control of such damage.

Chapter 11: Respiratory Deposition and Biological Fate of Inhaled Aerosols and Sulfur Dioxide.

This chapter is very much improved compared to earlier drafts reviewed by CASAC and is now a comprehensive and more informative summary of existing knowledge relevant to a criteria document. The existing knowledge in this area is, in many cases, incomplete. For example, a potentially very important factor is the influence of the integrity of lung epithelial barriers (both airway and alveolar) on deposition and clearance. To enhance the chapter's comprehensiveness, this issue should be discussed more sufficiently in the criteria document, despite the paucity of available data.

Chapter 12: Toxicological Studies.

This chapter is quite comprehensive as it describes essentially all toxicological studies relevant to a criteria document on sulfur oxides and particulates. Also, it provides commentary on many studies and the significance of their findings to potential human health effects. In addition, the presentation of the information is more polished than the previous draft because of improved editing.

Chapter 13: Controlled Human Studies.

This is a chapter which thoroughly discusses the published material on controlled human experiments. The scientific criteria for good studies discussed at the beginning of the chapter cannot be overemphasized. While not all studies meet these criteria, the Committee recognizes that EPA must take account of the available literature and believes the studies cited in the chapter have been appropriately selected and discussed. Overall the chapter is well-written and directed toward addressing those questions to which answers are needed. One of the most important criteria for good human clinical studies is that they be double-blind. Unfortunately, most of the studies in the literature were not so performed. This factor is especially significant when sensitive population groups, such as asthmatics, are under study.

The chapter is also improved by the discussion of exposures administered through the nose and mouth during controlled studies. It appropriately notes that caution should be used in any attempted extrapolation of observed quantitative exposure/effects resulting from such protocols, particularly when compared to results that might be expected under ambient exposure conditions. The chapter identifies additional research results from studies using either face mask or open chamber oronasal breathing that would better resolve this issue, and it discusses existing studies in a balanced and thorough fashion.

Chapter 14: Epidemiological Studies.

The current draft of this chapter represents considerable change and improvement over previous drafts reviewed by CASAC. Following discussion with the Committee, EPA has applied a set of guidelines for deciding which epidemiological studies are most appropriate for use in revising ambient air quality standards.

More specific comments on the chapter include the following: (1) the integration of Chapter 14 with Chapter 3 has advanced the "real world" understanding concerning the application of epidemiological methods; (2) the epidemiological studies providing the most useful quantitative concentration/response information for revising the 24-hour ambient particulate standard include: Lawther et al. 1958 and 1970; Martin and Bradley 1960; Martin 1964; Ware et al. 1981; and Mazumdar et al. 1981; (3) the epidemiological studies providing the most useful quantitative concentration/response information for revising the annual ambient particulate standard include: Ferris and Anderson 1962; Lunn et al. 1967; Ferris et al. 1971 and 1976; and Bouhuys et al. 1978; and (4) the studies by Lave and Seskin, 1970, and Mendelsohn and Orcutt, 1979 suggest an association between chronic exposure to high concentrations of sulfates and increases in the level of mortality, but they do not indicate any threshold or safe level from such exposures, and they are not refined enough to provide estimates of the quantitative effect of sulfate concentrations on mortality.

Summary

The Committee made numerous comments of an editorial nature. These remarks, as well as a more detailed discussion of the recommendations and review provided above, are included in the transcripts of the three CASAC meetings held to review this document. With the understanding that the advised changes will be incorporated in the final criteria document, the Committee is satisfied that the air quality criteria document for sulfur oxides/particulate matter is scientifically adequate for use in standard setting.

December 15, 1986.

The Honorable Lee M. Thomas,
Administrator, U.S. Environmental Protection Agency, Washington, DC 20460

Dear Mr. Thomas: The Clean Air Scientific Advisory Committee (CASAC) has completed its review of two documents related to the development of National Ambient Air Quality Standards (NAAQS) for Particulate Matter and Sulfur Oxides. These two documents are the 1982 *Air Quality Criteria for Particulate Matter and Sulfur Oxides*, and the 1986 *Second Addendum to Air Quality Criteria for Particulate Matter and Sulfur Oxides (1982)*, both prepared by the Agency's

Environmental Criteria and Assessment Office (ECAO).

The Committee was impressed with the efforts of the staff of ECAO in preparing a well written, integrated and thorough review of recent relevant scientific studies. The Committee unanimously concluded that this 1986 Addendum, along with the 1982 Criteria Document previously reviewed by CASAC, represent a scientifically balanced and defensible summary of the extensive scientific literature on these pollutants.

Several important issues are discussed in the 1986 Addendum which the Committee believes should be emphasized. These issues were raised during our review of recent studies which relate primarily to guidance at the lower bounds of the ranges for the standards. These studies include the recent reanalyses of the London mortality data, two episodic lung function studies in the United States and the Netherlands, and the comparison of respiratory symptoms and pulmonary function levels of children living in six U.S. cities. Further discussion of these studies and reanalyses, as well as a more detailed discussion of the basis for the Committee's conclusions, are contained in the attached report.

The Committee also reviewed the Staff Papers for particulate matter and for sulfur oxides at the October 15–16, 1986 meeting, and is preparing separate reports reflecting its conclusions and recommendations on each of these two documents.

Thank you for the opportunity to present the Committee's views on these important public health issues.

Sincerely,

Morton Lippmann, Ph.D.,
Chairman, Clean Air Scientific Advisory Committee.

cc: A. James Barnes, Lester Grant, Vann Newill, Craig Potter, Terry Yosie.

Summary of Major Scientific Issues and CASAC Conclusions on the 1986 Addendum to the 1982 Particulate Matter/Sulfur Oxides (PM/SO_x) Criteria Document

The Committee concentrated its review on newer studies and analyses which relate primarily to guidance on the lower limit of the proposed ranges for the standards. In general, the Committee believes the Criteria Document Addendum has appropriately summarized and interpreted the designs, analyses and conclusions of studies that should be considered in the standard setting process. The following is a brief chapter by chapter summary of issues that the Committee wishes to emphasize, or which require further clarification.

Chapter 1: Introduction

In general, this chapter provides an excellent summary of the physical and chemical properties and ambient measurement methods for PM and SO_x. However, the chapter could be strengthened by inclusion of a discussion of direct reading monitors for particulate mass concentrations including beta attenuation, light scattering, or other techniques which may be the dominant measurement techniques in the States in the future. This was discussed at the December 1985 CASAC meeting, with emphasis on the need to move to automated and continuous monitoring for particles.

Chapter 2: Respiratory Tract Deposition and Fate

The presentation in this chapter could be expanded by clarifying the discussion concerning the concept of impaired lungs and the deposition that would occur there as opposed to that in normal subjects. Further, the discussion of broncho-constriction being protective (Svartengren et al., 1984) and the discussion of other types of altered breathing patterns could be made clearer, perhaps by reorganizing this information by specific points.

Chapter 3: Epidemiology Studies

We wish to emphasize several studies and analyses discussed at the October 1986 CASAC meeting. One of these studies (Dassen et al.) should be integrated into this chapter, as was recognized by Agency staff in their remarks at the October 1986 meeting.

(1) The two episodic lung function studies show a consistency of results in Steubenville, Ohio (Dockery et al.) and Ijmond, Netherlands (Dassen et al.), lending credence to reported effects of a mixture of PM and sulfur oxides (SO_x) on respiratory function in children. This is consistent with the earlier work of Stebbings. These studies provide a relatively sensitive indication of possible short term physiological responses of uncertain health significance to PM. The roles of exposure times and duration of functional decrement need better definition.

(2) The London mortality studies, including recent analysis by Agency staff, provide strong evidence that particulate matter is more closely associated with daily mortality than sulfur dioxide concentrations. The criteria document should recharacterize distinctions made between "likely" and "possible" effects levels for establishing upper bounds.

(3) The Six-Cities study has reported that cough and bronchitis are twice as prevalent in children living in cities with PM_{15} in the range of 40–60 $\mu g/m^3$, in comparison to cities with a range of 20–30 $\mu g/m^3$.

Chapter 4: Controlled Human Exposure Studies of SO_x Health Effects

Although this chapter was well done, the Committee suggests that it be strengthened by modifying its existing discussions and by addition of further discussion and tabular material concerning short term exposure effects presented by Drs. Horstman and Folinsbee at the October 1986 CASAC meeting.

Conclusion

The 1986 Addendum to the 1982 Air Quality Criteria Document on PM/SO_x was prepared by EPA at the request of CASAC for the purpose of updating the knowledge of recent scientific studies and analyses. The Committee commends the Agency staff for its efforts in preparing a concise and well written document. The Addendum summarizes key findings from the earlier documents and provides a reasonably complete summary of newly available information concerning particulate matter and sulfur oxides, with major emphasis on evaluation of human health studies published since 1981. The Committee unanimously concludes that this 1986 Addendum, with the incorporation of the changes noted above, represents a scientifically balanced and defensible summary of the extensive scientific literature on these pollutants. These documents fulfill the requirements under section 108 of the Clean Air Act as amended, which requires that the document(s) ". . . shall accurately reflect the latest scientific knowledge useful in indicating the kind and extent of all identifiable effects on public health or welfare . . . " from particulate matter and sulfur oxides in the ambient air.

Addendum II—CASAC Review and Closure of the 1982 OAQPS Staff Paper for Particulate Matter and the 1986 Addendum to the Staff Paper

January 29, 1987.

Subject: CASAC Review and Closure of the OAQPS Staff Paper for Particulate Matter

From: Sheldon K. Friedlander, Chairman, Clean Air Scientific Advisory Committee

To: Anne M. Gorsuch, Administrator

The Clean Air Scientific Advisory Committee (CASAC) recently completed its second and final review of the document entitled *Review of the National Ambient Air Quality Standards for Particulate Matter: Assessment of Scientific and Technical Information, OAQPS Staff Paper.* The Committee notes with satisfaction the improvements made in the scientific quality and the completeness of the staff paper. It has been modified in accordance with the recommendations made by CASAC in July and November 1986. This document is also consistent in all significant respects with the scientific evidence presented and interpreted in the combined criteria document for sulfur oxides and particulate matter. It has organized the data relevant to the establishment of particulate primary and secondary ambient air quality standards in a logical and compelling way, and the Committee believes that it provides you with the [illegible] amount of technical guidance that is needed to make appropriate [illegible] of the standards.

CASAC has prepared this closure memorandum to inform you more specifically of its major findings and conclusions concerning the various scientific issues and studies discussed in the staff paper. In addition, the Committee's review of the scientific evidence leading to the particulate

standard revision leads to a discussion of its own role in the process for setting the standard.

CASAC Conclusions and Recommendations on Major Scientific Issues and Studies Associated With the Development of Revised NAAQS for Particulates

1. Based upon the review of available scientific evidence, a separate general particulate standard remains a reasonable public health policy choice.

2. CASAC reaffirms its initial recommendation of July 1981 to establish a 10 micrometer cut point for a revised primary particulate standard. This recommendation is based upon a recognition of the periodic, and sometimes frequent, tendency of both healthy and sensitive populations to breathe through their mouths and/or oronasally. This practice increases the amount of particulate matter that can penetrate into the thorax because the larger particles are not filtered in the oronasal passages. Deposition of particulates into this region is of special concern to those individuals with pre-existing respiratory problems and children. In addition, the collection of particles of less than 10 micrometer diameter size more closely resembles particles passing into the thoracic region of the human body than the collection of larger sized particles. Furthermore, monitors equipped for a 10 micrometer cut are less wind dependent and can provide a more accurate profile of the contemporary ambient air than samplers which measure total suspended particles.

CASAC's recommended size cut is also similar to proposals of other scientific associations. For example, 88% of the national members of the Air Quality Committee of the International Standards Organization recently voted for a particulate cut point at 10 micrometers for sampling particles which can deposit in the lungs.

The CASAC recommendation is based upon available scientific data. Other individuals and groups have discussed the possibility of establishing a revised particulate standard at a size cut considerably less than 10 micrometers. However, for the current revision of the standard, the scientific data more readily support a 10 micrometer size cut.

3. CASAC reached several major conclusions concerning the revision of the 24-hour and annual particulate standards. At the upper bound of the proposed ranges of 150–350 $\mu g/m^3$ for the 24-hour and 55–110 $\mu g/m^3$ for the annual averages, detectable health effects occur in the populations evaluated in the epidemiological studies. Since the upper end of these ranges contain little or no margin of safety, it would be appropriate to consider lower values for revising the 24-hour and annual standards. In addition, the stated ranges are based solely on quantitative evidence reported in epidemiological studies. A final decision on a revised standard should also incorporate information generated through controlled human, animal toxicology, and from other less quantitative epidemiological studies discussed in the criteria document.

There is an absence of a clearly definable exposure-response relationship for particles, as amply discussed in the criteria document and the staff paper. In addition, because airborne particles are heterogeneous in composition, the potential toxic effects of individual constituents should be considered in setting the standard. Thus, compared to margins of safety set for pollutants such as ozone and carbon monoxide, where exposure-response relationships are better established and small margins of safety are more justifiable, CASAC believes you should consider a revised standard with a wider margin of safety.

4. The Committee reached general agreement that the annual particulate standard should consist of an arithmetic mean. It is recommended that the 24-hour standard include a statistical form and that the number of exceedances is set in relation to the revised standard level.

5. During the past decade, the link between visibility and fine particle mass concentrations has been convincingly documented. Visibility is a sensitive indicator of accumulated man-made pollutants in the ambient air. The public cares about visibility and is willing to pay something for clean air. However, the quantitative basis for establishing a psychological, economic, transportation or any other welfare cost associated with visibility impairment has not been established. In addition, controls required to achieve a given visibility standard are not known due to the complexities of pollutant transport and transformation.

Defining acceptable levels of visibility is a social/policy judgment as well as a scientific decision, but science can provide some guidance. The upper end of the 8–25 $\mu g/m^3$ range for fine particles (those particles with a diameter size of less than 2.5 micrometers) would tend to maintain the status quo for the eastern United States and some western urban areas; but would permit air quality degradation for large areas in the west including national parks. Also, it is highly uncertain that the recommended thoracic particle ranges for the primary standard will protect visibility. The 8–25 $\mu g/m^3$ range for fine particles suggested for visibility protection is a seasonal and spatial average, unlike peak values which will be recommended for the primary standard.

The strongest case for a visibility related standard is one that links emissions of nitrogen oxides and sulfur dioxide with the interrelated aspects of acidic deposition, possible climatological effects, and visibility. Each of these three air quality issues is related to the fine particles which originate both as primary particulate emissions and as secondary aerosols from atmospheric conversions of sulfur dioxide and nitrogen oxides emitted as vapors. In terms of a control strategy to protect public welfare, it may be more efficient to consider a common standard linked to fine particles than to establish a separate set of controls for each of these problems and pollutants.

6. The Committee's evaluation of scientific data and studies in the criteria document and the staff paper lead it to conclude that there is no scientific justification for the establishment of a particulate standard for the specific protection of vegetation.

7. The Committee discussed what effect elimination of a Total Suspended Particulate (TSP) standard would have on the environment. The soiling and nuisance aspects of TSP are essentially local air quality problems because such coarse particles are not transported great distances. This contrasts with visibility or oxidant related problems which are distinctly issues of long range pollution transport. Individuals who serve on the Committee made various recommendations regarding retention or elimination of a secondary standard for TSP, but no clear consensus evolved.

The Process for Setting the Ambient Particulate Standard

In its report of September 21, 1981, CASAC made several major recommendations relating to the process for setting ambient air standards. The Committee is aware that your staff is analyzing its report and is awaiting a response.

A major underlying assumption of the Committee's recommendations was the need to make more explicit the relationship between the scientific evidence in the criteria document and the staff paper and the eventual selection of a numerical level for individual standards. The Committee strongly believes in the need to clarify the standard setting process by

identifying the key studies that will shape the determination of a standard. Intensive evaluation of such studies by CASAC and the public will considerably increase your ability to set a scientifically supportable standard.

The Committee is greatly encouraged by your decision to improve the format and content of OAQPS scientific issue staff papers. In the Draft Staff Paper for Particulate Matter key studies are identified and their implications for setting primary and secondary standards are discussed. More importantly, the inclusion of numerical ranges and their supporting rationale enable the Committee and the public to critically examine the staff's proposed use of the studies. This led to a marked improvement in the quality of the public dialogue concerning the scientific basis for revising the standard. CASAC commends your effort and recommends that all staff papers developed for ambient air standards contain numerical ranges.

CASAC recognizes that your statutory responsibility to set standards requires public health policy judgments in addition to determination of a strictly scientific nature. While the Committee is willing to further advise you on the particulate standard, we see no need, in view of the already extensive comments provided, to review the proposed particulate standards prior to their publication in the Federal Register. In this instance, the public comment period will provide sufficient opportunity for the Committee to provide any additional comment or review that may be necessary.

December 18, 1986.

The Honorable Lee Thomas,
Administrator, U.S. Environmental Protection Agency, Washington, DC 20460.

Dear Mr. Thomas: The Clean Air Scientific Advisory Committee (CASAC) has completed its review of the 1986 Addendum to the 1982 Staff Paper on Particulate Matter *(Review of the NAAQS for Particulate Matter: Assessment of Scientific and Technical Information)* prepared by the Agency's Office of Air Quality Planning and Standards (OAQPS).

The Committee unanimously concludes that this document is consistent in all significant respects with the scientific evidence presented and interpreted in the combined Air Quality Criteria Document for Particulate Matter/Sulfur Oxides and its 1986 Addendum, on which the CASAC recently issued its closure letter. The Committee believes that this document provides you with the kind and amount of technical guidance that will be needed to make appropriate revisions to the standards. The Committee's major findings and conclusions concerning the various scientific issues and studies discussed in the Staff Paper Addendum are contained in the attached report.

Thank you for the opportunity to present the Committee's views on this important public health issue.

Sincerely,

Morton Lippmann, Ph.D.,
Chairman, Clean Air Scientific Advisory Committee.

cc: A. James Barnes, Gerald Emison, Vann Newill, John O'Connor, Craig Potter, Terry Yosie.

Summary of Major Scientific Issues and CASAC Conclusions on the 1986 Draft Addendum to the 1982 Particulate Matter Staff Paper

The Committee found the technical discussions contained in the Staff Paper Addendum to be acceptable with minor revisions.

Particle Size Indicator

The CASAC reaffirms its January 29, 1982 recommendation that a particle size indicator that includes only those particles less than or equal to a nominal 10 um aerodynamic diameter, termed PM_{10}, is appropriate for regulation of particulate concentrations. This judgment is based on analysis of the earlier available data, and the analysis of the recent scientific studies discussed in the 1986 Addendum to the Air Quality Criteria for Particulate Matter/Sulfur Oxides and the 1986 Addendum to the Particulate Matter Staff Paper.

Implications of London Mortality Studies

Further analyses of the London mortality studies, including recent analysis by Agency staff, suggest that:

(1) the data provide no evidence for a threshold for the association between airborne particles and daily mortality or a change of coefficient with changes in particle composition;

(2) mortality effects can be associated with PM alone (with or without sulfur oxides);

(3) there is no reliable quantitative basis for converting British Smoke (BS) readings to PM_{10} gravimetric mass at low (<100–200 $\mu g/m^3$) BS levels, and hence the mortality data are not readily useful for establishing a lower bound for 24-hour PM_{10} NAAQSA, although the suggestion of mortality at relatively low PM levels must be given serious consideration in selecting a margin of safety.

Interpretation of Lung Function Studies for 24-hour Standard

Although the lung function decrements observed in children during and after air pollution episodes are of uncertain health significance, the two episodic lung function studies (Dockery et al., 1986; Dassen et al., 1986) are consistent with each other and the earlier work of Stebbings. They provide a relatively sensitive indication of possible short term physiological responses. Given the difficulty in deriving a lower limit from the mortality studies, these lung function studies can be useful in determining lower bounds for a 24-hour PM_{10} standard.

Interpretation of the Six Cities Study for Annual Standard

In general, the Committee felt that the six cities data are useful in establishing the lower bound of the range for the annual standard. In addition, the following are suggested by the data:

(1) Cough and bronchitis, as defined in this study, are about twice as prevalent in children living in cities with PM_{10} in the range of 40–80 $\mu g/m^3$ in comparison to cities with 20–30 $\mu g/m^3$;

(2) Because factors other than particulate matter may affect the inter-city differences, it is difficult to determine whether these associations should be designated as "likely" health effects;

(3) The results are consistent with the Ostro studies in terms of morbidity responses at long-term average particulate matter exposures within current particulate ambient air quality standards; and

(4) The results are consistent with the Bouhuys study in terms of symptoms without changes in pulmonary function.

Ranges for 24-hour and Annual Standards for PM_{10}

In its January 2, 1986 letter to the Administrator, the CASAC noted that its preliminary analyses of the more recent data do not indicate the need for fundamental changes in the structure of the proposed particle standards; however, the Committee pointed out that these new data suggest the need to focus consideration on standards at or perhaps below the low ends of the ranges proposed in the March 20, 1984 Federal Register Notice. The ranges of interest then proposed were 150–250 $\mu g/m^3$ for 24-hour standard, and 50–65 $\mu g/m^3$ for annual standard.

Since then, EPA staff have proposed updated ranges of interest for both the 24-hour standard (140–250 $\mu g/m^3$), and the annual standard (40–65 $\mu g/m^3$), based on short-term and long-term epidemiological data, respectively. The Committee finds these ranges of interest reasonable, given the scientific data and related uncertainties; however, a final decision should also weigh evidence from clinical and toxicological studies

as well. The Committee agrees with EPA staff that selection of final standards must include consideration of the combined protection afforded by the 24-hour and annual standards taken together.

The Committee recommends that you consider setting the revised standards at the lower ends of the proposed ranges for both the 24-hour and annual standards. The Committee recognizes that the exact levels to be chosen for the 24-hour and annual standards represent a policy choice, influenced by the need to include a margin of safety. Given the uncertainty in the supporting scientific data, the Committee cannot distinguish the health effects that may be observed at different levels near the lower bound, such as the health significance of setting the 24-hour standard at 140 $\mu g/m^3$ compared to 150 $\mu g/m^3$.

Addendum III—Executive Summary of the 1986 Addendum to the Staff Paper

Review of the National Ambient Air Quality Standards for Particulate Matter: Updated Assessment of Scientific and Technical Information—Addendum to the 1982 OAQPS Staff Paper (EPA, 1986b).

Executive Summary

This paper evaluates and interprets the updated scientific and technical information that the EPA staff believes is most relevant to decision making on revised primary (health) national ambient air quality standards (NAAQS) for particulate matter and is an addendum to the 1982 particulate matter staff paper. The paper assesses the factors the staff believes should be considered in selecting the pollutant indicator and level for the primary particulate matter standards, updating and supplementing previous staff conclusions and recommendations in these areas to incorporate more recent information. This assessment is intended to help bridge the gap between the scientific review contained in the EPA criteria document addendum "Second Addendum to Air Quality Criteria for Particulate Matter and Sulfur Oxides (1982): Assessment of Newly Available Health Effects Information" and the judgments required of the Administrator in making final decisions on revisions to the primary NAAQS for particulate matter that were proposed in March 1984 (49 FR 10408). The staff paper and this addendum are, therefore, important elements in the standards review process and provide an opportunity for public comment on proposed staff recommendations before they are presented to the Administrator.

Particulate matter represents a broad class of chemically and physically diverse substances that exist as discrete particles (liquid droplets or solids) ranging in size from molecular clusters of 0.005 micrometers (μm) to coarse particles on the order of 1000 μm. The major chemical and physical properties of particulate matter vary greatly with time, region, meteorology and source category, complicating the assessment of health and welfare effects as related to various indicators of particulate pollution. The original measurement method for the particulate matter NAAQS was the "hi volume" sampler, which collects particles of sizes up to a nominal 25–45 μm (so-called "Total Suspended Particulate" or TSP). EPA has proposed to replace this particulate matter indicator with one that includes only particles with aerodynamic diameters smaller than a nominal 10 μm, termed "PM_{10}". Although a large number of PM_{10} monitors are now in place, reliable and consistent data are, at present, limited. Data from 39 sites in EPA's IP network show long-term urban PM_{10} levels range between 25 and 75 $\mu g/m^3$ and maximum 24-hour values range from 50 to 175 $\mu g/m^3$. Higher values are likely as more data become available. Both fine (<2.5 μm) and coarse (>2.5 μm) particles are substantial components of PM_{10} mass, with a tendency for higher coarse contributions in western U.S. locations with higher concentrations. National estimates of PM_{10} levels are derived from applying measured PM_{10}/TSP ratios to the wider TSP data set. This analysis (for 1983–85 data) estimated that 193 counties exceeded the lower bound of the ranges proposed for PM_{10} standards (150 $\mu g/m^3$ 24 hour, 50 $\mu g/m^3$ annual) while 136 counties had sites that exceeded the current primary TSP standards.

Particle Indicator

Based on an examination of air quality composition, respiratory tract deposition, and health effects and related considerations, the 1982 staff paper recommended adoption of the size specific indicator (PM_{10}) proposed in 1984. The present staff assessment of the more recent information on respiratory tract deposition contained in the criteria document addendum reinforces the conclusions reached in the original staff assessment in 1982. The staff finds that the recent data do not support alternative indicators that have been suggested, which exclude all particles larger than 10 μm. The PM_{10} indicator is generally conservative over the range of tracheobronchial deposition.

Recent information suggesting enhanced tracheobronchial particle deposition for children relative to adults provides an additional reason for an indicator that includes particles capable of such penetration. Given these considerations and its earlier conclusions, the staff reaffirms its recommendation to replace TSP as the particle indicator for the primary standards with a new indicator that includes only those particles smaller than a nominal 10 μm in aerodynamic diameter (PM_{10}). The previously developed effectiveness criteria for samplers are acceptable for regulatory purposes.

Level of Standards

The major scientific basis for selecting PM standards that have an adequate margin of safety remains community epidemiological research, with mechanistic support from toxicological and controlled human investigations. The limitations of epidemiological studies for these purposes must, however, be recognized. Such studies, while representing real world conditions, can only provide associations between a complex pollutant mix measured at specific locations and times and a particular set of observable health points. Difficulties in conducting and interpreting epidemiological studies limit the reliance that can be placed on the results of any single study. None of the available studies have used PM_{10} as a direct measure of pollution, requiring—where appropriate—further conversion of results to estimated PM_{10} units.

The 1982 criteria document and the criteria document addendum identify a limited set of epidemiological studies most useful for developing quantitative conclusions regarding the effects of particulate matter. This updated staff assessment incorporates the previous evaluation of the earlier studies as well as the present assessment of more recent studies.

The updated staff assessment of the short-term epidemiological data is summarized in Table 1; levels are expressed in both the original (British smoke—"BS" or TSP) and PM_{10} units. The "effects likely" row denotes concentration ranges derived from the criteria document and its addendum at or above which a consensus judgment suggests greatest certainty that some effects would occur, at least under the conditions that obtained in the original studies. The data do not, however, show evidence of clear population thresholds but suggest a continuum of response with both the risk of effects occurring *and* the magnitude of any potential effect decreasing with concentration.

This is particularly true for the statistical analyses of daily mortality in London. Substantial agreement exists that wintertime pollution episodes produced premature mortality in elderly and ill populations, but the range and nature of association provide no clear basis for distinguishing any particular lowest "effects likely" levels or for defining a concentration below which no association remains. The recent lung function studies in children suggest that effects are possible in the range listed in Table 1, but the relationships are not certain enough to derive "effects likely" levels for PM_{10}. They do suggest levels below which detectable functional changes are unlikely to occur.

Table 1. Updated Staff Assessment of Short-Term Epidemiological Studies

Effects/study	Measured British smoke levels (as $\mu g/m^3$) (24-hr. avg.)			Measured TSP levels ($\mu g/m^3$ (24-hr. avg.)	Equivalent PM_{10} levels ($\mu g/m^3$)
	Daily mortality in London [1]	Aggravation of bronchitis [2]	Combined range	Small, reversible declines in lung function in children [3,4]	Combined range [5]
Effects Likely	1000	250*–500*	250–500		350–600
Effects Possible	?	<250*	<250	220*–420 [3]—200–250 [4]	140–350
No Significant Effects Noted				125* [4]–160 [3]	<125

* Indicates levels used for upper and lower bound of range.

[1] Various analyses of daily mortality encompassing the London winter of 1958–59, 14 winters from 1958–72, in aggregate and individually. Early winters dominated by high smoke and SO_2 from coal combustion with frequent fogs. From 1982 CD: Martin and Bradley (1960); Ware et al., (1981); Mazumdar et al. (1981). From 1986 CD Addendum: Mazumdar et al. (1982); Ostro (1984); Shumway et al., (1983); Schwartz and Marcus (1986). Later studies show association across entire range of smoke, with no clear delineation of "likely" effects or threshold of response possible.

[2] Study of symptoms reported by bronchitis patients in London, mid-50's to early 70's: Lawther et al. (1970).

[3] Study of pollution "episodes" in Steubenville, Ohio, 1978–80: Dockery et al. (1982).

[4] Study of 1985 pollution episode in Ijmond, The Netherlands: Dassen et al. (1986).

[5] (a) *Conversion of BS readings to PM_{10} levels:* Assumes for London conditions and BS readings in the range 100–500 $\mu g/m^3$, BS < PM_{10} < *TSP*. Precise conversions are not possible. Uncertainty in measurements of BS and conversion relationships preclude quantitative estimates of range for lower BS levels. The upper bound assumption (PM_{10} = TSP = BS + 100 $\mu g/m^3$) overestimates PM_{10} levels.

(b) *Conversion of TSP to PM_{10} for Dockery et al. results:* Based on analysis of particle size fraction relationships in Steubenville (Spengler et al. 1986). The lower bound TSP of 220 $\mu g/m^3$ was the peak reported for the Spring 1980 study. A PM_{10}/TSP ratio of about 0.6 occurred at a nearby site on days surrounding this peak. Using lower bound of PM_{10}/ PM_{15} ratio from later year (0.8), the PM_{10} to TSP ratio estimate used is 0.64. The 160 $\mu g/m^3$ reflects peak level in Fall 1980 from episode with no significant functional decline noted.

(c) *Conversion of Dassen et al. results to PM_{10}:* Both PM indices (Respirable Suspended Particles [RSP] and TSP) reached similar levels. Results suggest TSP levels too low, but PM_{10} levels unlikely to be much higher than RSP. Thus RSP = PM_{10} assumed for conditions of higher concentrations in this study. The 125 $\mu g/m^3$ entry reflects an excursion occurring 2 days prior to date on which no decrements noted.

Based on this staff assessment of the short-term epidemiological data, the range of 24-hour PM_{10} levels of interest are 140 to 250 $\mu g/m^3$. The upper end of the range reflects the judgment of the Administrator with regard to the maximum level proposed in 1984 for a 24-hour standard, based on his consideration of the earlier criteria and assessments. Although the recent information provides additional support for the possibility of effects at lower levels, it does not demonstrate that adverse effects would occur with certainty at a PM_{10} concentration of 250 $\mu g/m^3$. This level, therefore, remains an appropriate upper bound. The recent data suggest that the range of levels under consideration of alternative standards can be reduced to 140 $\mu g/m^3$, although the original lower bound of 150 $\mu g/m^3$ is within the range of uncertainty associated with expressing the data as PM_{10}. Neither the studies used to derive this range nor the more qualitative studies of effects in other sensitive population groups (e.g., asthmatics) or effects in controlled human or animal studies provide convincing scientific support for health risks of consequence below 140 $\mu g/m^3$ in current U.S. atmospheres. These qualitative data, as well as factors such as aerosol composition and exposure characteristics, should also be considered in evaluating margins of safety associated with alternative standards in the range of 140 $\mu g/m^3$ to 150 $\mu g/m^3$.

The amended staff assessment of the more quantitative long-term epidemiological data is summarized in Table 2. Long-term studies are subject to additional confounding variables that reduce their sensitivity and make interpretation more difficult. The most important new study shows a gradient of responses in children among six U.S. cities that follows the measured gradient in particulate matter, but response comparisons for locations with somewhat smaller pollution gradients within some of these cities do not follow the same patterns. The results of a separate series of studies on long and intermediate term (2–6 weeks) exposures in a number of U.S. cities (Ostro, 1983, 1987; Hausman et. al. 1984) is more supportive of the possibility of within city effects as comparable U.S. exposure levels. Thus some risk of effects is possible at levels somewhat below those suggested by the 1982 assessment, but it is uncertain given the potential for confounding present in these more recent studies.

Table 2. Updated Staff Assessment of Long-Term Epidemiological Studies

Effects/study	Measured BS levels (as μg/m³)	Measured TSP Levels (μg/m³)					Equivalent PM_{10} level (μg/m³)
	Increased respiratory disease, reduced lung function in children [1]	Increased respiratory disease, symptoms, small reduction in lung function in adults [2]	Increased respiratory symptoms in adults [3]	Increased respiratory symptoms and illnesses in children [4]	Reduced lung function in children [4]	Combined range	Combined range [5]
Effects likely	230–300	180*				>180	>80–?
Effects possible	<230	120–180*	80–150(110)	80*–114		80–180	40–?
No significant [6] effects noted		80–120			40–114	<80	<?

* Indicates levels used for upper and lower bound of range.

[1] Study conducted in 1963–65 in Sheffield, England (Lunn et al., 1967). BS levels (as μg/m³) uncertain.

[2] Studies conducted in 1961–73 in Berlin, N.H. (Ferris et al., 1973, 1976). Effects likely level (180 μg/m³) based on uncertain 2-month average. Effects in lung function were relatively small.

[3] Study conducted in 1973 in two Connecticut towns. (Bouhuys et al., 1973). Exposure estimates reflect 1965–73 data in Ansonia. Median value (110 μg/m³) used to indicate long-term concentration. No effects on lung function, but some suggestion of effects on respiratory symptoms.

[4] Study conducted in 1976–1980 in 6 U.S. cities (Ware et al., 1986). Exposure estimates reflect 4-year averages across cities. Comparable pollution/effects gradients not noted within cities.

[5] Conversion of TSP to PM_{10} equivalents for Berlin, Ansonia studies based on estimated ratio of PM_{10}/TSP for current U.S. atmospheres (Pace, 1983). The estimated ratio ranged between 0.45 and 0.5. Conversion for six-city study based on site-specific analysis of particle size data (Spengler et al., 1986).

[6] Ranges reflect gradients in which no significant effects were detected for categories at top. Combined range reflects all columns.

Based on this updated assessment of the long-term epidemiological data, the staff recommends that the range of annual PM_{10} levels of interest be 40 to 65 μg/m³. The upper end of the range reflects the judgment of the Administrator with regard to the maximum level proposed for an annual standard, based on his consideration of the earlier criteria and assessment. The staff concludes that this level remains a useful upper bound. The recent data prompt consideration of a standard level below the previous lower bound (50 μg/m³) to values as low as 40 μg/m³. Uncertain data from one recent study of six cities suggest that at this level some risk may remain of respiratory effects in children, but no detectable increases in pulmonary function are expected in children or adults.

When evaluating margins of safety for an annual standard, it is particularly important to examine the results of qualitative data from a number of epidemiological, animal, and air quality studies. These suggest concern for effects not directly evaluated in the studies used to develop the ranges. Such effects include damage to lung tissues contributing to chronic respiratory disease, cancer, and premature mortality. The available scientific data do not suggest major risks for these effects categories at current ambient particle levels in most U.S. areas. Nevertheless, the risk that both fine and coarse particles may produce these responses supports the need to limit long-term levels of PM_{10} for a variety of aerosol compositions.

When selecting final standard levels, consideration should be given to the combined protection afforded by the 24-hour and annual standards taken together. For example, a 24-hour standard at 150 μg/m³ would substantially reduce annual levels in a number of areas below 50 μg/m³ adding to the protection afforded by an annual standard in areas with higher 24-hour peak to annual mean ratios.

Because of different form, averaging procedures, size range, and limited PM_{10} data, precise comparison between the above ranges of PM_{10} standards and the current primary TSP standards is not possible. A staff analysis of PM_{10}/TSP ratios applied to recent TSP data shows that the revised lower bounds, taken together, would result in standards clearly more stringent than the current standards. In various analyses, standards at the lower bound of the previous range (150,50) have appeared to range from more stringent to approximately comparable to the present primary standards. Standards at the upper end of the range could, however, result in about a four-fold decrease in the number of areas exceeding the primary standards.

PART 50—NATIONAL PRIMARY AND SECONDARY AMBIENT AIR QUALITY STANDARDS

For reasons set forth in the preamble, Part 50 of Chapter 1 of Title 40 of the Code of Federal Regulations is amended as follows:

1. The authority citation for Part 50 continues to read as follows:

Authority: Secs. 109 and 301(a), Clean Air Act, as amended (42 U.S.C. 7409, 7601 (a)).

2. Section 50.6 is revised to read as follows:

§ 50.6 National primary and secondary ambient air quality standards for particulate matter.

(a) The level of the national primary and secondary 24-hour ambient air quality standards for particulate matter is 150 micrograms per cubic meter (μg/m³), 24-hour average concentration. The standards are attained when the expected number of days per calendar year with a 24-hour average concentration above 150 μg/m³, as determined in accordance with Appendix K to this part, is equal to or less than one.

(b) The level of the national primary and secondary annual standards for particulate matter is 50 micrograms per cubic meter (μg/m³), annual arithmetic mean. The standards are attained when the expected annual arithmetic mean concentration, as determined in accordance with Appendix K to this part, is less than or equal to 50 μg/m³.

(c) For the purpose of determining attainment of the primary and secondary standards, particulate matter shall be measured in the ambient air as PM_{10} (particles with an aerodynamic

diameter less than or equal to a nominal 10 micrometers) by:

(1) A reference method based on Appendix J and designated in accordance with Part 53 of this chapter, or

(2) An equivalent method designated in accordance with Part 53 of this chapter.

§50.7 [Removed and reserved]

3. Section 50.7 is removed and reserved.

4. In Appendix G, reference 10 is removed and reserved and section 5.1.1 is revised to read as follows:

5.1.1 *High-Volume Sampler.* Use and calibrate the sampler as described in Appendix B to this Part.

5. Appendix I is added and reserved.

Appendix I [Reserved]

6. Appendix J is added to read as follows:

Appendix J—Reference Method for the Determination of Particulate Matter as PM_{10} in the Atmosphere

1.0 *Applicability.*

1.1 This method provides for the measurement of the mass concentration of particulate matter with an aerodynamic diameter less than or equal to a nominal 10 micrometers (PM_{10}) in ambient air over a 24-hour period for purposes of determining attainment and maintenance of the primary and secondary national ambient air quality standards for particulate matter specified in § 50.6 of this chapter. The measurement process is nondestructive, and the PM_{10} sample can be subjected to subsequent physical or chemical analyses. Quality assurance procedures and guidance are provided in Part 58, Appendices A and B, of this chapter and in References 1 and 2.

2.0 *Principle.*

2.1 An air sampler draws ambient air at a constant flow rate into a specially shaped inlet where the suspended particulate matter is inertially separated into one or more size fractions within the PM_{10} size range. Each size fraction in the PM_{10} size range is then collected on a separate filter over the specified sampling period. The particle size discrimination characteristics (sampling effectiveness and 50 percent cutpoint) of the sampler inlet are prescribed as performance specifications in Part 53 of this chapter.

2.2 Each filter is weighed (after moisture equilibration) before and after use to determine the net weight (mass) gain due to collected PM_{10}. The total volume of air sampled, corrected to EPA reference conditions (25° C, 101.3 kPa), is determined from the measured flow rate and the sampling time. The mass concentration of PM_{10} in the ambient air is computed as the total mass of collected particles in the PM_{10} size range divided by the volume of air sampled, and is expressed in micrograms per standard cubic meter (μg/std m³). For PM_{10} samples collected at temperatures and pressures significantly different from EPA reference conditions, these corrected concentrations sometimes differ substantially from actual concentrations (in micrograms per actual cubic meter), particularly at high elevations. Although not required, the actual PM_{10} concentration can be calculated from the corrected concentration, using the average ambient temperature and barometric pressure during the sampling period.

2.3 A method based on this principle will be considered a reference method only if (a) the associated sampler meets the requirements specified in this appendix and the requirements in Part 53 of this chapter, and (b) the method has been designated as a reference method in accordance with Part 53 of this chapter.

3.0 *Range.*

3.1 The lower limit of the mass concentration range is determined by the repeatability of filter tare weights, assuming the nominal air sample volume for the sampler. For samplers having an automatic filter-changing mechanism, there may be no upper limit. For samplers that do not have an automatic filter-changing mechanism, the upper limit is determined by the filter mass loading beyond which the sampler no longer maintains the operating flow rate within specified limits due to increased pressure drop across the loaded filter. This upper limit cannot be specified precisely because it is a complex function of the ambient particle size distribution and type, humidity, filter type, and perhaps other factors. Nevertheless, all samplers should be capable of measuring 24-hour PM_{10} mass concentrations of at least 300 μg/std m³ while maintaining the operating flow rate within the specified limits.

4.0 *Precision.*

4.1 The precision of PM_{10} samplers must be 5 μg/m³ for PM_{10} concentrations below 80 μg/m³ and 7 percent for PM_{10} concentrations above 80 μg/m³, as required by Part 53 of this chapter, which prescribes a test procedure that determines the variation in the PM_{10} concentration measurements of identical samplers under typical sampling conditions. Continual assessment of precision via collocated samplers is required by Part 58 of this chapter for PM_{10} samplers used in certain monitoring networks.

5.0 *Accuracy.*

5.1 Because the size of the particles making up ambient particulate matter varies over a wide range and the concentration of particles varies with particle size, it is difficult to define the absolute accuracy of PM_{10} samplers. Part 53 of this chapter provides a specification for the sampling effectiveness of PM_{10} samplers. This specification requires that the expected mass concentration calculated for a candidate PM_{10} sampler, when sampling a specified particle size distribution, be within ±10 percent of that calculated for an ideal sampler whose sampling effectiveness is explicitly specified. Also, the particle size for 50 percent sampling effectiveness is required to be 10±0.5 micrometers. Other specifications related to accuracy apply to flow measurement and calibration, filter media, analytical (weighing) procedures, and artifact. The flow rate accuracy of PM_{10} samplers used in certain monitoring networks is required by Part 58 of this chapter to be assessed periodically via flow rate audits.

6.0 *Potential Sources of Error.*

6.1 *Volatile Particles.* Volatile particles collected on filters are often lost during shipment and/or storage of the filters prior to the post-sampling weighing [3]. Although shipment or storage of loaded filters is sometimes unavoidable, filters should be reweighed as soon as practical to minimize these losses.

6.2 *Artifacts.* Positive errors in PM_{10} concentration measurements may result from retention of gaseous species on filters [4, 5]. Such errors include the retention of sulfur dioxide and nitric acid. Retention of sulfur dioxide on filters, followed by oxidation to sulfate, is referred to as artifact sulfate formation, a phenomenon which increases with increasing filter alkalinity [6]. Little or no artifact sulfate formation should occur using filters that meet the alkalinity specification in section 7.2.4. Artifact nitrate formation, resulting primarily from retention of nitric acid, occurs to varying degrees on many filter types, including glass fiber, cellulose ester, and many quartz fiber filters [4, 7, 8, 9, 10]. Loss of true atmospheric particulate nitrate during or following sampling may also occur due to dissociation or chemical reaction. This phenomenon has been observed on Teflon® filters [8] and inferred for quartz fiber filters [11, 12]. The magnitude of nitrate artifact errors in PM_{10} mass concentration measurements will vary with location and ambient temperature; however, for most sampling locations, these errors are expected to be small.

6.3 *Humidity.* The effects of ambient humidity on the sample are unavoidable. The filter equilibration procedure in section 8.0 is designed to minimize the effects of moisture on the filter medium.

6.4 *Filter Handling.* Careful handling of filters between presampling and postsampling weighings is necessary to avoid errors due to damaged filters or loss of collected particles from the filters. Use of a filter cartridge or cassette may reduce the magnitude of these errors. Filters must also meet the integrity specification in section 7.2.3.

6.5 *Flow Rate Variation.* Variations in the sampler's operating flow rate may alter the particle size discrimination characteristics of the sampler inlet. The magnitude of this error will depend on the sensitivity of the inlet to variations in flow rate and on the particle distribution in the atmosphere during the sampling period. The use of a flow control device (section 7.1.3) is required to minimize this error.

6.6 *Air Volume Determination.* Errors in the air volume determination may result from errors in the flow rate and/or sampling time measurements. The flow control device serves to minimize errors in the flow rate determination, and an elapsed time meter (section 7.1.5) is required to minimize the error in the sampling time measurement.

7.0 *Apparatus.*

7.1 PM_{10} Sampler.

7.1.1 The sampler shall be designed to:

a. Draw the air sample into the sampler inlet and through the particle collection filter at a uniform face velocity.

b. Hold and seal the filter in a horizontal position so that sample air is drawn downward through the filter.

c. Allow the filter to be installed and removed conveniently.

d. Protect the filter and sampler from precipitation and prevent insects and other debris from being sampled.

e. Minimize air leaks that would cause error in the measurement of the air volume passing through the filter.

f. Discharge exhaust air at a sufficient distance from the sampler inlet to minimize the sampling of exhaust air.

g. Minimize the collection of dust from the supporting surface.

7.1.2 The sampler shall have a sample air inlet system that, when operated within a specified flow rate range, provides particle size discrimination characteristics meeting all of the applicable performance specifications prescribed in Part 53 of this chapter. The sampler inlet shall show no significant wind direction dependence. The latter requirement can generally be satisfied by an inlet shape that is circularly symmetrical about a vertical axis.

7.1.3 The sampler shall have a flow control device capable of maintaining the sampler's operating flow rate within the flow rate limits specified for the sampler inlet over normal variations in line voltage and filter pressure drop.

7.1.4 The sampler shall provide a means to measure the total flow rate during the sampling period. A continuous flow recorder is recommended but not required. The flow measurement device shall be accurate to ±2 percent.

7.1.5 A timing/control device capable of starting and stopping the sampler shall be used to obtain a sample collection period of 24 ±1 hr (1,440 ±60 min). An elapsed time meter, accurate to within ±15 minutes, shall be used to measure sampling time. This meter is optional for samplers with continuous flow recorders if the sampling time measurement obtained by means of the recorder meets the ±15 minute accuracy specification.

7.1.6 The sampler shall have an associated operation or instruction manual as required by Part 53 of this chapter which includes detailed instructions on the calibration, operation, and maintenance of the sampler.

7.2 *Filters.*

7.2.1 *Filter Medium.* No commercially available filter medium is ideal in all respects for all samplers. The user's goals in sampling determine the relative importance of various filter characteristics (e.g., cost, ease of handling, physical and chemical characteristics, etc.) and, consequently, determine the choice among acceptable filters. Furthermore, certain types of filters may not be suitable for use with some samplers, particularly under heavy loading conditions (high mass concentrations), because of high or rapid increase in the filter flow resistance that would exceed the capability of the sampler's flow control device. However, samplers equipped with automatic filter-changing mechanisms may allow use of these types of filters. The specifications given below are minimum requirements to ensure acceptability of the filter medium for measurement of PM_{10} mass concentrations. Other filter evaluation criteria should be considered to meet individual sampling and analysis objectives.

7.2.2 *Collection Efficiency.* >98 percent, as measured by the DOP test (ASTM–2986) with 0.3 μm particles at the sampler's operating face velocity.

7.2.3 *Integrity.* ±5 μg/m³ (assuming sampler's nominal 24-hour air sample volume). Integrity is measured as the PM_{10} concentration equivalent corresponding to the average difference between the initial and the final weights of a random sample of test filters that are weighed and handled under actual or simulated sampling conditions, but have no air sample passed through them (i.e., filter blanks). As a minimum, the test procedure must include initial equilibration and weighing, installation on an inoperative sampler, removal from the sampler, and final equilibration and weighing.

7.2.4 *Alkalinity.* <25 microequivalents/gram of filter, as measured by the procedure given in Reference 13 following at least two months storage in a clean environment (free from contamination by acidic gases) at room temperature and humidity.

7.3 *Flow Rate Transfer Standard.* The flow rate transfer standard must be suitable for the sampler's operating flow rate and must be calibrated against a primary flow or volume standard that is traceable to the National Bureau of Standards (NBS). The flow rate transfer standard must be capable of measuring the sampler's operating flow rate with an accuracy of ±2 percent.

7.4 *Filter Conditioning Environment.*

7.4.1 Temperature range: 15° to 30° C.

7.4.2 Temperature control: ±3° C.

7.4.3 Humidity range: 20% to 45% RH.

7.4.4 Humidity control: ±5% RH.

7.5 *Analytical Balance.* The analytical balance must be suitable for weighing the type and size of filters required by the sampler. The range and sensitivity required will depend on the filter tare weights and mass loadings. Typically, an analytical balance with a sensitivity of 0.1 mg is required for high volume samplers (flow rates >0.5 m³/min). Lower volume samplers (flow rates <0.5 m³/min) will require a more sensitive balance.

8.0 *Calibration.*

8.1 *General Requirements.*

8.1.1 Calibration of the sampler's flow measurement device is required to establish traceability of subsequent flow measurements to a primary standard. A flow rate transfer standard calibrated against a primary flow or volume standard shall be used to calibrate or verify the accuracy of the sampler's flow measurement device.

8.1.2 Particle size discrimination by inertial separation requires that specific air velocities be maintained in the sampler's air inlet system. Therefore, the flow rate through the sampler's inlet must be maintained throughout the sampling period within the design flow rate range specified by the manufacturer. Design flow rates are specified as actual volumetric flow rates, measured at existing conditions of temperature and pressure (Q_a). In contrast, mass concentrations of PM_{10} are computed using flow rates corrected to EPA reference conditions of temperature and pressure.

8.2 *Flow Rate Calibration Procedure.*

8.2.1 PM_{10} samplers employ various types of flow control and flow measurement devices. The specific procedure used for flow rate calibration or verification will vary depending on the type of flow control or flow indicator employed. Calibration in terms of actual volumetric flow rates (Q_a) is generally recommended, but other measures of flow rate (e.g., Q_{std}) may be used provided the requirements of section 8.1 are met. The general procedure given here is based on actual volumetric flow units (Q_a) and is intended to illustrate the steps involved in the calibration of a PM_{10} sampler. Consult the sampler manufacturer's instruction manual and Reference 2 for specific guidance on calibration. Reference 14 provides additional information on the use of the commonly used measures of flow rate and their interrelationships.

8.2.2 Calibrate the flow rate transfer standard against a primary flow or volume standard traceable to NBS. Establish a calibration relationship (e.g., an equation or family of curves) such that traceability of the primary standard is accurate to within 2 percent over the expected range of ambient conditions (i.e., temperatures and pressures) under which the transfer standard will be used. Recalibrate the transfer standard periodically.

8.2.3 Following the sampler manufacturer's instruction manual, remove the sampler inlet and connect the flow rate transfer standard to the sampler such that the transfer standard accurately measures the sampler's flow rate. Make sure there are no leaks between the transfer standard and the sampler.

8.2.4 Choose a minimum of three flow rates (actual m³/min), spaced over the acceptable flow rate range specified for the inlet (see 7.1.2) that can be obtained by suitable adjustment of the sampler flow rate. In accordance with the sampler manufacturer's instruction manual, obtain and verify the calibration relationship between the flow rate (actual m³/min) as indicated by the transfer standard and the sampler's flow indicator response. Record the ambient temperature and barometric pressure. Temperature and pressure corrections to subsequent flow indicator readings may be required for certain types of flow measurement devices. When such corrections are necessary, correction on an individual or daily basis is preferable. However, seasonal average temperature and average barometric pressure for the sampling site may be incorporated into the sampler calibration to avoid daily corrections. Consult the sampler manufacturer's instruction manual and Reference 2 for additional guidance.

8.2.5 Following calibration, verify that the sampler is operating at its design flow rate (actual m³/min) with a clean filter in place.

8.2.6 Replace the sampler inlet.

9.0 *Procedure.*

9.1 The sampler shall be operated in accordance with the specific guidance provided in the sampler manufacturer's instruction manual and in Reference 2. The

general procedure given here assumes that the sampler's flow rate calibration is based on flow rates at ambient conditions (Q_a) and serves to illustrate the steps involved in the operation of a PM_{10} sampler.

8.2 Inspect each filter for pinholes, particles, and other imperfections. Establish a filter information record and assign an identification number to each filter.

8.3 Equilibrate each filter in the conditioning environment (see 7.4) for at least 24 hours.

8.4 Following equilibration, weigh each filter and record the presampling weight with the filter identification number.

8.5 Install a preweighed filter in the sampler following the instructions provided in the sampler manufacturer's instructional manual.

8.6 Turn on the sampler and allow it to establish run-temperature conditions. Record the flow indicator reading and, if needed, the ambient temperature and barometric pressure. Determine the sampler flow rate (actual m^3/min) in accordance with the instructions provided in the sampler manufacturer's instruction manual. NOTE.—No onsite temperature or pressure measurements are necessary if the sampler's flow indicator does not require temperature or pressure corrections or if seasonal average temperature and average barometric pressure for the sampling site are incorporated into the sampler calibration (see step 8.2.4). If individual or daily temperature and pressure corrections are required, ambient temperature and barometric pressure can be obtained by on-site measurements or from a nearby weather station. Barometric pressure readings obtained from airports must be station pressure, not corrected to sea level, and may need to be corrected for differences in elevation between the sampling site and the airport.

8.7 If the flow rate is outside the acceptable range specified by the manufacturer, check for leaks, and if necessary, adjust the flow rate to the specified setpoint. Stop the sampler.

8.8 Set the timer to start and stop the sampler at appropriate times. Set the elapsed time meter to zero or record the initial meter reading.

8.9 Record the sample information (site location or identification number, sample date, filter identification number, and sampler model and serial number).

8.10 Sample for 24±1 hours.

8.11 Determine and record the average flow rate (Q_a) in actual m^3/min for the sampling period in accordance with the instructions provided in the sampler manufacturer's instruction manual. Record the elapsed time meter final reading and, if needed, the average ambient temperature and barometric pressure for the sampling period (see note following step 8.6).

8.12 Carefully remove the filter from the sampler, following the sampler manufacturer's instruction manual. Touch only the outer edges of the filter.

8.13 Place the filter in a protective holder or container (e.g., petri dish, glassine envelope, or manila folder).

8.14 Record any factors such as meteorological conditions, construction activity, fires or dust storms, etc., that might be pertinent to the measurement on the filter information record.

8.15 Transport the exposed sample filter to the filter conditioning environment as soon as possible for equilibration and subsequent weighing.

8.16 Equilibrate the exposed filter in the conditioning environment for at least 24 hours under the same temperature and humidity conditions used for presampling filter equilibration (see 8.3).

8.17 Immediately after equilibration, reweigh the filter and record the postsampling weight with the filter identification number.

10.0 *Sampler Maintenance.*

10.1 The PM_{10} sampler shall be maintained in strict accordance with the maintenance procedures specified in the sampler manufacturer's instruction manual.

11.0 *Calculations.*

11.1 Calculate the average flow rate over the sampling period corrected to EPA reference conditions as Q_{std}. When the sampler's flow indicator is calibrated in actual volumetric units (Q_a), Q_{std} is calculated as:

$$Q_{std} = Q_a \times (P_{sa}/T_{sa})(T_{std}/P_{std})$$

where

Q_{std} = average flow rate at EPA reference conditions, std m^3/min;

Q_a = average flow rate at ambient conditions, m^3/min;

P_{sa} = average barometric pressure during the sampling period or average barometric pressure for the sampling site, kPa (or mm Hg);

T_{sa} = average ambient temperature during the sampling period or seasonal average ambient temperature for the sampling site, K;

T_{std} = standard temperature, defined as 298 K;

P_{std} = standard pressure, defined as 101.3 kPa (or 760 mm Hg).

11.2 Calculate the total volume of air sampled as:

$$V_{std} = Q_{std} \times t$$

where

V_{std} = total air sampled in standard volume units, std m^3;

t = sampling time, min.

11.3 Calculate the PM_{10} concentration as:

$$PM_{10} = (W_f - W_i) \times 10^6 / V_{std}$$

where

PM_{10} = mass concentration of PM_{10}, μg/std m^3;

W_f, W_i = final and initial weights of filter collecting PM_{10} particles, g;

10^6 = conversion of g to μg.

Note.—If more than one size fraction in the PM_{10} size range is collected by the sampler, the sum of the net weight gain by each collection filter ($\Sigma(W_f - W_i)$) is used to calculate the PM_{10} mass concentration.

12.0 *References.*

1. Quality Assurance Handbook for Air Pollution Measurement Systems, Volume I. Principles. EPA-600/9-76-005, March 1976. Available from CERI, ORD Publications, U.S. Environmental Protection Agency, 26 West St. Clair Street, Cincinnati, Ohio 45268.

2. Quality Assurance Handbook for Air Pollution Measurement Systems, Volume II. Ambient Air Specific Methods. EPA-600/4-77-027a, May 1977. Available from CERI, ORD Publications, U.S. Environmental Protection Agency, 26 West St. Clair Street, Cincinnati, Ohio 45268.

3. Clement, R.E., and F.W. Karasek. Sample Composition Changes in Sampling and Analysis of Organic Compounds in Aerosols. Int. J. Environ. Analyt. Chem., 7:109, 1979.

4. Lee, R.E., Jr., and J. Wagman. A Sampling Anomaly in the Determination of Atmospheric Sulfate Concentration. Amer. Ind. Hyg. Assoc. J., 27:266, 1966.

5. Appel, B.R., S.M. Wall, Y. Tokiwa, and M. Haik. Interference Effects in Sampling Particulate Nitrate in Ambient Air. Atmos. Environ., 13:319, 1979.

6. Coutant, R.W. Effect of Environmental Variables on Collection of Atmospheric Sulfate. Environ. Sci. Technol., 11:873, 1977.

7. Spicer, C.W., and P. Schumacher. Interference in Sampling Atmospheric Particulate Nitrate. Atmos. Environ., 11:873, 1977.

8. Appel, B.R., Y. Tokiwa, and M. Haik. Sampling of Nitrates in Ambient Air. Atmos. Environ., 15:283, 1981.

9. Spicer, C.W., and P.M. Schumacher. Particulate Nitrate: Laboratory and Field Studies of Major Sampling Interferences. Atmos. Environ., 13:543, 1979.

10. Appel, B.R. Letter to Larry Purdue, U.S. EPA, Environmental Monitoring and Support Laboratory, March 18, 1982. Docket No. A-82-37, II-I-1.

11. Pierson, W.R., W.W. Brachaczek, T.J. Korniski, T.J. Truex, and J.W. Butler. Artifact Formation of Sulfate, Nitrate, and Hydrogen Ion on Backup Filters: Allegheny Mountain Experiment. J. Air Pollut. Control Assoc., 30:30, 1980.

12. Dunwoody, C.L. Rapid Nitrate Loss From PM_{10} Filters. J. Air Pollut. Control Assoc., 36:817, 1986.

13. Harrell, R.M. Measuring the Alkalinity of Hi-Vol Air Filters. EMSL/RTP-SOP-QAD-534, October 1985. Available from the U.S. Environmental Protection Agency, EMSL/QAD, Research Triangle Park, North Carolina 27711.

14. Smith, F., P.S. Wohlschlegel, R.S.C. Rogers, and D.J. Mulligan. Investigation of Flow Rate Calibration Procedures Associated With the High Volume Method for Determination of Suspended Particulates. EPA-600/4-78-047, U.S. Environmental Protection Agency, Research Triangle Park, North Carolina 27711, 1978.

7. Appendix K is added to read as follows:

Appendix K—Interpretation of the National Ambient Air Quality Standards for Particulate Matter

1.0 *General.*

This appendix explains the computations necessary for analyzing particulate matter data to determine attainment of the 24-hour and annual standards specified in 40 CFR 50.6. For the primary and secondary standards, particulate matter is measured in the ambient air as PM_{10} (particles with an aerodynamic diameter less than or equal to a nominal 10 micrometers) by a reference method based on Appendix J of this part and designated in accordance with Part 53 of this chapter, or by an equivalent method designated in accordance with Part 53 of this chapter. The required frequency of measurements is specified in Part 58 of this chapter.

Several terms used throughout this appendix must be defined. A "daily value" for PM_{10} refers to the 24-hour average concentration of PM_{10} calculated or measured from midnight to midnight (local time). The term "exceedance" means a daily value that is above the level of the 24-hour standard after rounding to the nearest 10 $\mu g/m^3$ (i.e., values ending in 5 or greater are to be rounded up). The term "average" refers to an arithmetic mean. All particulate matter standards are expressed in terms of expected annual values: expected number of exceedances per year for the 24-hour standard and expected annual arithmetic mean for the annual standards. The "expected annual value" is the number approached when the annual values from an increasing number of years are averaged. In the absence of long-term trends in emissions or meteorological conditions, the term "year" refers to a calendar year.

Although the discussion in this appendix focuses on monitored data, the same principles apply to modeling data, subject to EPA modeling guidelines.

2.0 *Attainment Determinations.*

2.1 *24-Hour Primary and Secondary Standards.*

Under 40 CFR 50.6(a) the 24-hour primary and secondary standards are attained when the expected number of exceedances per year at each monitoring site is less than or equal to one. In the simplest case, the number of expected exceedances at a site is determined by recording the number of exceedances in each calendar year and then averaging them over the past 3 calendar years. Situations in which 3 years of data are not available and possible adjustments for unusual events or trends are discussed in Sections 2.3 and 2.4. Further, when data for a year are incomplete, it is necessary to compute an estimated number of exceedances for that year by adjusting the observed number of exceedances. This procedure, performed by calendar quarter, is described in Section 3. The expected number of exceedances is then estimated by averaging the individual annual estimates for the past 3 years.

The comparison with the allowable expected exceedance rate of one per year is made in terms of a number rounded to the nearest tenth (fractional values equal to or greater than 0.05 are to be rounded up; e.g., an exceedance rate of 1.05 would be rounded to 1.1, which is the lowest rate for nonattainment).

2.2 *Annual Primary and Secondary Standards.*

Under 40 CFR 50.6(b), the annual primary and secondary standards are attained when the expected annual arithmetic mean PM_{10} concentration is less than or equal to the level of the standard. In the simplest case, the expected annual arithmetic mean is determined by averaging the annual arithmetic mean PM_{10} concentrations for the past 3 calendar years. Because of the potential for incomplete data and the possible seasonality in PM_{10} concentrations, the annual mean shall be calculated by averaging the four quarterly means of PM_{10} concentrations within the calendar year. The formulas for calculating the annual arithmetic mean are given in Section 4. Situations in which 3 years of data are not available and possible adjustments for unusual events or trends are discussed in Sections 2.3 and 2.4. The expected annual arithmetic mean is rounded to the nearest 1 $\mu g/m^3$ before comparison with the annual primary standard (fractional values equal to or greater than 0.5 are to be rounded up).

2.3 *Data Requirements.*

40 CFR 58.13 specifies the required minimum frequency of sampling for PM_{10}. For the purposes of making comparisons with the particulate matter standards, all data produced by National Air Monitoring Stations (NAMS), State and Local Air Monitoring Stations (SLAMS) and other sites submitted to EPA in accordance with the Part 58 requirements must be used, and a minimum of 75 percent of the scheduled PM_{10} samples per quarter are required.

To demonstrate attainment of either the annual or 24-hour standards at a monitoring site, the monitor must provide sufficient data to perform the required calculations of Sections 3 and 4. The amount of data required varies with the sampling frequency, data capture rate and the number of years of record. In all cases, 3 years of representative monitoring data that meet the 75 percent criterion of the previous paragraph should be utilized, if available, and would suffice. More than 3 years may be considered, if all additional representative years of data meeting the 75 percent criterion are utilized. Data not meeting these criteria may also suffice to show attainment; however, such exceptions will have to be approved by the appropriate Regional Administrator in accordance with EPA guidance.

There are less stringent data requirements for showing that a monitor has failed an attainment test and thus has recorded a violation of the particulate matter standards. Although it is generally necessary to meet the minimum 75 percent data capture requirement per quarter to use the computational formulas described in Sections 3 and 4, this criterion does not apply when less data is sufficient to unambiguously establish nonattainment. The following examples illustrate how nonattainment can be demonstrated when a site fails to meet the completeness criteria. Nonattainment of the 24-hour primary standards can be established by (a) the observed annual number of exceedances (e.g., four observed exceedances in a single year), or by (b) the estimated number of exceedances derived from the observed number of exceedances and the required number of scheduled samples (e.g., two observed exceedances with every other day sampling). Nonattainment of the annual standards can be demonstrated on the basis of quarterly mean concentrations developed from observed data combined with one-half the minimum detectable concentration substituted for missing values. In both cases, expected annual values must exceed the levels allowed by the standards.

2.4 *Adjustment for Exceptional Events and Trends.*

An exceptional event is an uncontrollable event caused by natural sources of particulate matter or an event that is not expected to recur at a given location. Inclusion of such a value in the computation of exceedances or averages could result in inappropriate estimates of their respective expected annual values. To reduce the effect of unusual events, more than 3 years of representative data may be used. Alternatively, other techniques, such as the use of statistical models or the use of historical data could be considered so that the event may be discounted or weighted according to the likelihood that it will recur. The use of such techniques is subject to the approval of the appropriate Regional Administrator in accordance with EPA guidance.

In cases where long-term trends in emissions and air quality are evident, mathematical techniques should be applied to account for the trends to ensure that the expected annual values are not inappropriately biased by unrepresentative data. In the simplest case, if 3 years of data are available under stable emission conditions, this data should be used. In the event of a trend or shift in emission patterns, either the most recent representative year(s) could be used or statistical techniques or models could be used in conjunction with previous years of data to adjust for trends. The use of less than 3 years of data, and any adjustments are subject to the approval of the appropriate Regional Administrator in accordance with EPA guidance.

3.0 *Computational formulas for the 24-hour standard.*

3.1 *Estimating Exceedances for a year.*

If PM_{10} sampling is scheduled less frequently than every day, or if some scheduled samples are missed, a PM_{10} value will not be available for each day of the year. To account for the possible effect of incomplete data, an adjustment must be made to the data collected at each monitoring location to estimate the number of exceedances in a calendar year. In this adjustment, the assumption is made that the fraction of missing values that would have exceeded the standard level is identical to the fraction of measured values above this level. This computation is to be made for all sites that are scheduled to monitor throughout the entire year and meet the minimum data requirements of Section 2.3. Because of possible seasonal imbalance, this adjustment shall be applied on a quarterly

basis. The estimate of the expected number of exceedances for the quarter is equal to the observed number of exceedances plus an increment associated with the missing data. The following formula must be used for these computations:

$$e_q = v_q + [(v_q/n_q) \times (N_q - n_q)] = v_q \times N_q/n_q \quad [1]$$

where

e_q = the estimated number of exceedances for calendar quarter q.
v_q = the observed number of exceedances for calendar quarter q.
N_q = the number of days in calendar quarter q.
n_q = the number of days in calendar quarter q with PM_{10}, and
q = the index for calendar quarter, q = 1, 2, 3 or 4.

The estimated number of exceedances for a calendar quarter must be rounded to the nearest hundredth (fractional values equal to or greater than 0.005 must be rounded up).

The estimated number of exceedances for the years, e, is the sum of the estimates for each calendar quarter.

$$e = \sum_{q=1}^{4} e_q \quad [2]$$

The estimated number of exceedances for a single year must be rounded to one decimal place (fractional values equal to or greater than 0.05 are to be rounded up). The expected number of exceedances is then estimated by averaging the individual annual estimates for the most recent 3 or more representative years of data. The expected number of exceedances must be rounded to one decimal place (fractional values equal to or greater than 0.05 are to be rounded up).

The adjustment for incomplete data will not be necessary for monitoring or modeling data which constitutes a complete record, i.e., 365 days per year.

To reduce the potential for overestimating the number of expected exceedances, the correction for missing data will not be required for a calendar quarter in which the first observed exceedance has occurred if: (a) there was only one exceedance in the calendar quarter, (b) everyday sampling is subsequently initiated and maintained for 4 calendar quarters in accordance with 40 CFR § 58.13 and (c) data capture of 75 percent is achieved during the required period of everyday sampling. In addition, if the first exceedance is observed in a calendar quarter in which the monitor is already sampling every day, no adjustment for missing data will be made to the first exceedance if a 75 percent data capture rate was achieved in the quarter in which it was observed.

Example 1

During a particular calendar quarter, 28 out of a possible 92 samples were recorded, with one observed exceedance of the 24-hour standard. Using formula [1], the estimated number of exceedances for the quarter is

$e_q = 1 \times 92/28 = 2.556$ or 2.56

If the estimated exceedances for the other 3 calendar quarters in the year were 2.30, 0.0 and 0.0, then, using formula [2], the estimated number of exceedances for the year is $2.56 + 2.30 + 0.0 + 0.0$ which equals 4.86 or 4.7. If no exceedances were observed for the 2 previous years, then the expected number of exceedances is estimated by $(1/3) \times (4.7 + 0 + 0) = 1.57$ or 1.6. Since 1.6 exceeds the allowable number of expected exceedances, this monitoring site would fail the attainment test.

Example 2

In this example, everyday sampling was initiated following the first observed exceedance as required by 40 CFR § 58.13. Accordingly, the first observed exceedance would not be adjusted for incomplete sampling. During the next three quarters, 1.2 exceedances were estimated. In this case, the estimated exceedances for the year would be $1.0 + 1.2 + 0.0 + 0.0$ which equals 2.2. If, as before, no exceedances were observed for the two previous years, then the estimated exceedances for the 3-year period would then be $(1/3) \times (2.2 + 0.0 + 0.0) = 0.7$, and the monitoring site would *not* fail the attainment test.

3.2 Adjustments for Non-Scheduled Sampling Days.

If a systematic sampling schedule is used and sampling is performed on days in addition to the days specified by the systematic sampling schedule, e.g., during episodes of high pollution, then an adjustment must be made in the formula for the estimation of exceedances. Such an adjustment is needed to eliminate the bias in the estimate of the quarterly and annual number of exceedances that would occur if the chance of an exceedance is different for scheduled than for non-scheduled days, as would be the case with episode sampling.

The required adjustment treats the systematic sampling schedule as a stratified sampling plan. If the period from one scheduled sample until the day preceding the next scheduled sample is defined as a sampling stratum, then there is one stratum for each scheduled sampling day. An average number of observed exceedances is computed for each of these sampling strata. With nonscheduled sampling days, the estimated number of exceedances is defined as

$$e_q = (N_q/m_q) \times \sum_{j=1}^{m_q} (v_j/k_j) \quad [3]$$

where

e_q = the estimated number of exceedances for the quarter.
N_q = the number of days in the quarter.
m_q = the number of strata with samples during the quarter.
v_j = the number of observed exceedances in stratum j, and
k_j = the number of actual samples in stratum j.

Note that if only one sample value is recorded in each stratum, then formula [3] reduces to formula [1].

Example 3

A monitoring site samples according to a systematic sampling schedule of one sample every 6 days, for a total of 15 scheduled samples in a quarter out of a total of 92 possible samples. During one 6-day period, potential episode levels of PM_{10} were suspected, so 5 additional samples were taken. One of the regular scheduled samples was missed, so a total of 19 samples in 14 sampling strata were measured. The one 6-day sampling stratum with 6 samples recorded 2 exceedances. The remainder of the quarter with one sample per stratum recorded zero exceedances. Using formula [3], the estimated number of exceedances for the quarter is

$e_q = (92/14) \times (2/6 + 0 + \ldots + 0) = 2.19$

4.0 Computational Formulas for Annual Standards.

4.1 Calculation of the Annual Arithmetic Mean.

An annual arithmetic mean value for PM_{10} is determined by averaging the quarterly means for the 4 calendar quarters of the year. The following formula is to be used for calculation of the mean for a calendar quarter:

$$\bar{X}_q = (1/n_q) \times \sum_{i=1}^{n_q} X_i \quad [4]$$

where

$\bar{X}_q$ = the quarterly mean concentration for quarter q, q = 1, 2, 3, or 4.
n_q = the number of samples in the quarter, and
X_i = the ith concentration value recorded in the quarter.

The quarterly mean, expressed in $\mu g/m^3$, must be rounded to the nearest tenth (fractional values of 0.05 should be rounded up).

The annual mean is calculated by using the following formula:

$$\bar{X} = (1/4) \times \sum_{q=1}^{4} \bar{X}_q \quad [5]$$

where

$\bar{X}$ = the annual mean, and
$\bar{X}_q$ = the mean for calendar quarter q.

The average of quarterly means must be rounded to the nearest tenth (fractional values of 0.05 should be rounded up).

The use of quarterly averages to compute the annual average will not be necessary for

monitoring or modeling data which results in a complete record, i.e., 365 days per year.

The expected annual mean is estimated as the average of three or more annual means. This multi-year estimate, expressed in $\mu g/m^3$, shall be rounded to the nearest integer for comparison with the annual standard (fractional values of 0.5 should be rounded up).

Example 4

Using formula [4], the quarterly means are calculated for each calendar quarter. If the quarterly means are 52.4, 78.3, 82.1, and 83.2 $\mu g/m^3$, then the annual means is

$$\bar{x} = (1/4) \times (52.4 + 78.3 + 82.1 + 83.2 = 68.25 \text{ or } 68.3$$

4.2 Adjustments for Non-scheduled Sampling Days.

An adjustment in the calculation of the annual mean is needed if sampling is performed on days in addition to the days specified by the systematic sampling schedule. For the same reasons given in the discussion of estimated exceedances (Section 3.2), the quarterly averages would be calculated by using the following formula:

$$\bar{x}_q = (1/m_q) \times \sum_{j=1}^{m_q} \frac{k_j}{\sum_{i=1}^{k_j} (x_{ij}/k_j)} \quad [6]$$

where

$\bar{x}_q$ = the quarterly mean concentration for quarter q, q = 1, 2, 3, or 4,

x_{ij} = the ith concentration value recorded in stratum j,

k_j = the number of actual samples in stratum j, and

m_q = the number of strata with data in the quarter.

If one sample value is recorded in each stratum, formula [6] reduces to a simple arithmetic average of the observed values as described by formula [4].

Example 5

During one calendar quarter, 9 observations were recorded. These samples were distributed among 7 sampling strata, with 3 observations in one stratum. The concentrations of the 3 observations in the single stratum were 202, 242, and 180 $\mu g/m^3$. The remaining 6 observed concentrations were 55, 68, 73, 92, 120, and 155 $\mu g/m^3$. Applying the weighting factors specified in formula [6], the quarterly mean is

$$\bar{x}_q = (1/7) \times [(1/3) \times (202 + 242 + 180) + 55 + 68 + 73 + 92 + 120 + 155] = 110.1$$

Although 24-hour measurements are rounded to the nearest 10 $\mu g/m^3$ for determinations of exceedances of the 24-hour standard, note that these values are rounded to the nearest 1 $\mu g/m^3$ for the calculation of means.

[FR Doc. 87-13707 Filed 6-30-87; 8:45 am]
BILLING CODE 6560-50-M

UNITED STATES ENVIRONMENTAL PROTECTION AGENCY
Office of Air Quality Planning and Standards
Research Triangle Park, North Carolina 27711

27 JUL 1987

MEMORANDUM

SUBJECT: Ambient Air Issue from New Jersey
Department of Environmental Protection (DEP)

FROM: G.T. Helms, Chief
Control Programs Operations Branch

TO: William S. Baker, Chief
Air Branch, Region II

In response to your request, we have reviewed your position with respect to a determination of ambient air applicability in the vicinity of the proposed EF Kenilworth, Inc. (EFKI) cogeneration unit in Union County, New Jersey. As we understand it, EFKI will build and operate the plant on property leased (long-term lease) from Schering Corporation. As we see it the EFKI operator will be completely separate from the Schering operation and except for the land owned and operated by a different Company. The fact that EFKI has entered into a contract to supply electricity/steam to Schering is not really relevant to the ambient air issue.

We agree with your position that all property outside of the property leased and controlled by EFKI would be considered ambient air. The word "controlled" is emphasized since nothing is said in either your memorandums or New Jersey's letter to Region II about what, if any, fence or other physical barrier would be installed to prevent public access to the EFKI leased property. If such physical barrier is not erected, then all land including the leased site would have to be considered as ambient air.

If you have any questions, please contact Sharon Reinders, at 629-5253.

cc: D. Tyler
J. Tikvart
D. Wilson
G. McCutchen

nearest 1 $\mu g/m^3$ before comparison with the annual primary standard (fractional values equal to or greater than 0.5 are to be rounded up)." is corrected to read "The expected annual arithmetic mean is rounded to the nearest 1 $\mu g/m^3$ before comparison with the anual standards (fractional values equal to or greater than 0.5 are to be rounded up).".

18. On page 24667, column 3, Section 3.0 of Appendix K, change "Computational formulas for the 24-hour standard" to "Computational formulas for the 24-hour standards".

19. On page 24668, column 1, line 17 of Appendix K, change "$_q$" to "q" and line 24, change "years" to "year".

20. On page 24668, the following formulas in Appendix K are corrected:

Formula (2) is corrected to read

$$e = \sum_{q=1}^{4} e_q$$

formula (3) is corrected to read

$$e_q = (N_q/m_q) \times \sum_{j=1}^{m_q} (v_j/k_j)$$

formula (4) is corrected to read

$$\bar{x}_q = (1/n_q) \times \sum_{j=1}^{n_q} x_j$$

and lines 6 and 7 under formula (4) which read "x_i=the ith concentration value recorded in the quarter." are corrected to read "x_i=the ith concentration value recorded in the quarter.".

formula (5) is corrected to read

$$\bar{x} = (1/4) \times \sum_{q=1}^{4} \bar{x}_q$$

21. On page 24669, column 2, line 4 of Appendix K, change "means" to "mean".

22. On page 24669 of Appendix K, the formula which reads

$\bar{x} = (1/4) \times (52.4 + 75.3 + 82.1 + 63.2 = 68.25$ or 68.3

is corrected to read

$\bar{x} = (1/4) \times (52.4 + 75.3 + 82.1 + 63.2 = 68.25$ or 68.3

23. On page 24669, formula (6) in Appendix K is corrected to read

$$\bar{x}_q = (1/m_q) \times \sum_{j=1}^{m_q} \sum_{i=1}^{k_j} (x_{ij}/k_j)$$

[FR Doc. 87-17983 Filed 8-6-87; 8:45 am]
BILLING CODE 6560-50-M

---

40 CFR Parts 51 and 52

[AD-FRL-3244-6]

PM_{10} Group I and Group II Areas

AGENCY: Environmental Protection Agency (EPA).

ACTION: List of PM_{10} Group I and Group II areas.

SUMMARY: On July 1, 1987, the EPA promulgated national ambient air quality standards (NAAQS) for particulate matter with an aerometric diameter of a nominal 10 micron of less (PM_{10}) (see 52 FR 24634). The EPA also promulgated policies and regulations by which it will implement the PM_{10} NAAQS (52 FR 24672). In accordance with these policies, EPA has categorized areas of the Nation into three groups based on the likelihood that the existing State implementation plan (SIP) must be revised to protect the PM_{10} NAAQS. Areas with a strong likelihood of violating the PM_{10} NAAQS and requiring substantial SIP revisions were placed in Group I; areas where attainment of the PM_{10} NAAQS is uncertain and the SIP may require only slight adjustment were placed in Group II; and areas with a strong likelihood of attaining the PM_{10} NAAQS, and therefore probably having an adequate control strategy, were placed in Group III.

By this notice, EPA is identifying the Group I and Group II areas in each State. The remainder of the State not in Group I or II is placed in Group III.

ADDRESSES: Information supporting the placement of each area in Group I, II, or III can be obtained from the respective EPA Regional Office which services the particular State. The addresses of the Regional Offices are:

- State Air Programs Branch, EPA, Region I, JFK Federal Building, Boston, Massachusetts 02203.
- Air Programs Branch, EPA, Region II, 26 Federal Plaza, New York, New York 10278.
- Air Programs Branch, EPA, Region III, 841 Chestnut Building, Philadelphia, Pennsylvania 19107.
- Air Programs Branch, EPA, Region IV, 345 Courtland Street, N.E., Atlanta, Georgia 30365.
- Air and Radiation Branch, EPA, Region V, 230 South Dearborn Street, Chicago, Illinois 60604.
- Air Programs Branch, EPA, Region VI, Allied Bank Tower, 1445 Ross Avenue, Dallas, Texas 75202-2733.
- Air Branch, EPA, Region VII, 726 Minnesota Avenue, Kansas City, Kansas 66101.
- Air Programs Branch, EPA, Region VIII, 999 18th Street, Suite 1300 Denver, Colorado 80202-2413.
- Air Programs Branch, EPA, Region IX, 215 Fremont Street, San Francisco, California, 94105.
- Air Programs Branch, EPA, Region X, 1200 6th Avenue, Seattle, Washington 98101.

FOR FURTHER INFORMATION CONTACT: Kenneth Woodard, Standards Implementation Branch (MD-15), U.S. Environmental Protection Agency, Research Triangle Park, North Carolina 27711. Telephone: (919) 541-5351 (FTS 629-5351).

SUPPLEMENTARY INFORMATION:

I. Background

On July 1, 1987 (52 FR 24672), EPA promulgated in 40 CFR Parts 51 and 52 policies and regulations by which it will implement the PM_{10} NAAQS. The EPA's policies for developing SIP's for PM_{10} are discussed fully in section IV.C. of the preamble to that Federal Register (52 FR 24679). Also as noted in that preamble, section 110(a)(1) of the Clean Air Act (Act) requires that each State adopt and submit, within 9 months after revision of a NAAQS, a SIP providing for attainment and maintenance of the primary NAAQS as expeditiously as practicable but no later than 3 years from the date EPA approves the SIP.

Due to a lack of PM_{10} ambient monitoring data, EPA considered different ways of implementing this requirement, including simply calling upon States to develop and submit a full PM_{10} attainment demonstration and control strategy for every area of the country within the 9-month period. The EPA believes, however, that such a requirement would be unreasonable in many areas. An analysis of ambient total suspended particulate (TSP) data for 1984-1986 in conjunction with the methodology described in EPA's "probability guideline" (Procedures for Estimating Probability of Nonattainment *of a PM_{10} NAAQS Using Total*

Suspended Particulate Matter or PM_{10} Data, EPA 450/4-86-017) indicates that there could be from 50 to 150 counties in which the PM_{10} NAAQS will not be attained. While these numbers are the best indication at this time of the potential nonattainment situation for PM_{10}, they are only estimates and will probably change as new ambient PM_{10} data become available. The estimates are, however, useful as an indication of the degree of PM_{10} SIP development that may eventually be necessary. The key point is that many of the 3141 counties in the Nation may need no additional particulate matter SIP provisions to meet the revised NAAQS. Thus, for many areas, the existing TSP SIP's may already provide for timely attainment and maintenance of the PM_{10} NAAQS. To call upon areas that almost certainly have adequate SIP's to resubmit those SIP's along with full attainment demonstrations would be unnecessary and therefore wasteful of limited State resources.[1]

There are, also, several areas where available data indicate that air quality may be close to the level of the NAAQS. Many of these areas may actually be shown, with more ambient data, to be in attainment or may need only minor SIP changes. Therefore, EPA believes that a demand for immediate submissions of attainment demonstrations and control strategies for all of these areas is unreasonable when additional PM_{10} air quality data could provide a more clear picture of the status of the area. On the other hand, due to applicable Act requirements and the potential environmental risk, the Administrator did not consider it reasonable to permit delay in the development of PM_{10} control programs for areas with severe air quality problems until adequate PM_{10} data were available to show that the area was violating the PM_{10} NAAQS.

For the reasons given immediately above, EPA adopted a policy by which it is dividing all areas of the country into three categories: (1) Areas with a strong likelihood of violating the PM_{10} NAAQS and requiring substantial SIP adjustment (Group I), (2) areas where attainment of the standards is possible and existing SIP's probably need less adjustment (Group II), and (3) areas with a strong likelihood of attaining the PM_{10} NAAQS and therefore needing only adjustments to the applicable prevention of significant deterioration/new source review (PSD/NSR) and monitoring provisions in their SIP's (Group III).

The EPA used a three-step process to categorize areas into Groups I, II, and III. First, where only ambient TSP data or limited amounts of PM_{10} data were available, EPA in cooperation with State agencies used those data and the probability guideline to classify areas preliminarily as Group I, II, or III. The EPA presumed that, at a minimum, the (1) areas with a probability of not attaining the PM_{10} standard of at least 95 percent fit into Group I, (2) areas with a probability of between 20 and 95 percent fit into Group II, and (3) areas with a probability of less than 20 percent fit into Group III.

Second, EPA's Regional Offices, after consulting with the appropriate State and local agencies, evaluated the existing TSP SIP's, available existing source data, and other relevant information for each area in their jurisdiction (1) to see whether information other than the probability of nonattainment justified changing the group for an area, and (2) to determine the appropriate group for areas that the EPA could not classify under the first step because ambient TSP data were unavailable.

Third, to insure national consistency, all grouping was reviewed by representatives of EPA's Headquarters staff and Regional Offices.

The EPA has completed the process of categorizing areas and the Group I and II areas are listed by State in the following section of this notice. Any area of a State not listed as Group I or II is considered to be in Group III.

The requirements and schedules for developing PM_{10} SIP's are different for Group I, II, and III areas. Immediate action to develop a full SIP that will bring about attainment and maintenance of the PM_{10} NAAQS is required for Group I areas because they have a strong likelihood of violating the NAAQS and requiring substantial revision of the existing SIP. Since the attainment status of Group II areas is uncertain, time is allowed for additional monitoring of ambient PM_{10} concentrations before revision of the existing control strategy is required. Group III areas have a strong likelihood of attaining the PM_{10} NAAQS. Therefore, for Group III areas, the State need only submit SIP revisions for the preconstruction review program and monitoring network (52 FR 24681) within 9 months. The requirements for SIP development for each group are discussed fully at 52 FR 24680–24682.

The Group I and II areas of concern are generally described below as a county, a township, or a planning area. These descriptions are only the initial definitions of the areas that must be investigated in the SIP development process. In the process of monitoring and modeling PM_{10} concentrations and determining the extent of sources of PM_{10} emissions that impact the areas, the States will better define the boundaries of the area that is or may be violating the standards.

In 1977, Congress added section 107(d)(1) to the Act which required EPA to designate areas as nonattainment, unclassifiable, or attainment for the NAAQS existing at that time. In 40 CFR Part 81, EPA made such designations for TSP. Since the PM_{10} NAAQS is being implemented under the provisions of section 110 of the Act, such designations are not necessary for PM_{10}. Thus, EPA will not make such designations for PM_{10} (see 52 FR 24682). However, EPA will retain the TSP designations to implement the requirements of Part C of the Act relating to PSD (see 52 FR 24685).

II. List of Areas

Separate lists of Group I and Group II areas follow. They are listed by county within each State. The area of concern or planning area within the county is specified where appropriate.

GROUP I AREAS

State and Counties	Area of Concern
Alaska:	
Anchorage	Anchorage.
Juneau	Juneau.
Arizona:	
Cochise	Paul Spur/Douglas area.
Pinal	Hayden/Miami area and Phoenix planning area.
Gila	Hayden/Miami area.
Maricopa	Phoenix planning area.
Yuma	Yuma planning area.
Pima	Rillito planning area.
California:	
Inyo	Owens Valley planning area and Saline Valley planning area.
Mono	Mammoth Lakes planning area.
Fresno	San Joaquin Valley.
Kern	San Joaquin Valley and Searles Valley planning area.
Kings	San Joaquin Valley.
Tulare	San Joaquin Valley.
Los Angeles	LA metropolitan area.
California:	
Orange	LA metropolitan area.
Riverside	South Coast Air Basin and Coachella Valley.
San Bernardino	South Coast Air Basin and Searles Valley planning area.
Imperial	Imperial Valley planning area and Salton Sea planning area.
Colorado:	
Archuleta	Pagosa Springs.
Adams	Denver metropolitan area.
Denver	Denver metropolitan area.
Arapahoe	Denver metropolitan area.
Jefferson	Denver metropolitan area.
San Miguel	Telluride.
Prowers	Lamar.
Pitkin	Aspen.

[1] Developing a sound attainment demonstration is generally resource intensive. It requires an in-depth study of the emission characteristics of specific sources in the demonstration area and a thorough evaluation of the anticipated effects of various emission levels from those sources. The EPA estimates it could require up to 4 work years and $250,000 to develop a SIP for each area found to be violating the NAAQS.

GROUP I AREAS—Continued

State and Counties	Area of Concern
Fremont	Canyon City.
Connecticut:	
New Haven	Interstate 95 corridor.
Fairfield	Interstate 95 corridor.
Idaho:	
Ada	Boise.
Shoshone	Pinehurst.
Bonner	Sandpoint.
Bannock	Pocatello.
Power	Pocatello.
Illinois:	
Madison	County.
Cook	County.
Indiana:	
Lake	County.
Porter	County.
Maine:	
Aroostook	Presque Isle.
Michigan:	
Wayne	County.
Minnesota:	
Ramsey	County.
Montana:	
Flathead	Kalispell.
Lincoln	Libby.
Lake	Ronan, Polson.
Missoula	Missoula.
Rosebud	Lame Deer.
Silver Bow	Butte.
Nevada:	
Washoe	Reno planning area.
Clark	Las Vegas planning area.
New Mexico:	
Dona Ana	County.
Ohio:	
Cuyahoga	County.
Jefferson	County.
Oregon:	
Jackson	Medford and White City.
Josephine	Grants Pass.
Lane	Eugene and Springfield.
Klamath	Klamath Falls.
Texas:	
El Paso	County.
Utah:	
Salt Lake	Salt Lake metropolitan area and Magna.
Utah	Provo.
West Virginia:	
Brooke	Follansbee area.
Washington:	
King	Seattle metropolitan area.
Pierce	Tacoma metropolitan area.
Spokane	Spokane.
Yakima	Yakima.
Thurston	Lacey.
Walla Walla	Wallula.
Wyoming:	
Sheridan	Sheridan.

GROUP II AREAS

State and counties	Area of concern
Alabama:	
Jefferson	North Birmingham and Leeds.
Alaska:	
Fairbanks	Fairbanks.
Arizona:	
Coconino	Flagstaff planning area.
Graham	Safford planning area.
Navajo	Show Low and Joseph City planning areas.
Apache	Show Low planning area.
Santa Cruz	Nogales planning area.
Pima	Ajo and Tucson planning areas.
Cochise	Tucson planning area.
Pinal	Casa Grande planning area.
California:	
Santa Clara	County.
San Joaquin	County.
Stanislaus	County.
Kern	Southeast Desert Air Basin.
Los Angeles	Southeast Desert Air Basin.
Colorado:	
Adams	Brighton.
Boulder	Longmont.
Delta	Delta.
Eagle	Vail.
El Paso	Colorado Springs.
Garfield	Glenwood Springs, Rifle.
Gunnison	Crested Butte.
Routt	Steamboat Springs.
Mesa	Grand Junction, Fruita.
Weld	Greeley.
Guam: Pitt	County.
Idaho: Caribou	Conda.
Illinois:	
LaSalle	Oglesby.
Randolph	Baldwin.
Macon	Decatur.
Rock Island	Rock Island, Moline.
Will	Joliet.
St. Clair	East St. Louis.
DuPage	Addison.
Indiana:	
Marion	Subpart of Indianapolis.
Vigo	Terre Haute.
Iowa:	
Cerro Gordo	Mason City.
Linn	Cedar Rapids.
Polk	Des Moines.
Kansas:	
Wyandotte	Kansas City.
Kentucky:	
Boyd	Cattletsburg and Ashland.
Maryland:	
Baltimore	Baltimore.
Michigan:	
Saginaw	Carrollton.
Monroe	Monroe.
Minnesota:	
Hennepin	Minneapolis.
St. Louis	Duluth and Iron Range.
Itasca	Iron Range.
Lake	Two Harbors twp.
Stearns	St. Cloud twp.
Montana:	
Blaine	Hays.
Flathead	Columbia Falls.
Deer Lodge	Anaconda.
Lewis & Clark	Helena.
Sanders	Thompson Falls.
Lincoln	Eureka.
Nebraska:	
Cass	Weeping Water.
Douglas	Omaha.
Nevada:	
Lander	Battle Mountain area.
Humbolt	Battle Mountain area.
Elko	Battle Mountain area.
Eureka	Battle Mountain area.
New Jersey:	
Hudson	Jersey City.
Camden	Camden.
New York:	
Onondaga	Solvay.
New Mexico:	
Bernalillo	County.
Grant	County.
Santa Fe	County.
Sandoval	County.
Taos	County.
Ohio:	
Wyandot	Carey.
Scioto	New Boston.
Trumbull	Warren, Howland twp.
Lorain	Sheffield twp.
Butler	Middletown.
Seneca	Thompson twp.
Sandusky	Jackson twp.
Belmont	Martins Ferry,
Columbiana	East Liverpool.
Franklin	Columbus.
Hamilton	Cincinnati.
Mahoning	Youngstown.
Montgomery	Dayton.
Richland	Mansfield.
Stark	Canton.
Summit	Akron.
Oklahoma:	
Comanche	County.
Oregon:	
Deschutes	Bend.
Multnomah	Portland.
Union	La Grande.
Lane	Oakridge.
Pennsylvania:	
Allegheny	County.
Philadelphia	Bridesburg—Port Richmond.
Erie	County.
Lawrence	County.
Mercer	County.
Puerto Rico:	
San Juan	San Juan.
South Dakota:	
Pennington	Rapid City.
Texas:	
Dallas	County.
Harris	County.
Lubbock	County.
Nueces	County.
Virginia:	
Buchanan	County.
West Virginia:	
Hancock	County.
Brooke	Remainder of county not in Group I.
Washington:	
Benton	Kennewick.
King	Bellevue.
Wisconsin:	
Brown	DePere.
Milwaukee	Milwaukee.
Waukesha	Waukesha.
Douglas	Superior.
Dane	Madison.
Wyoming:	
Fremont	Lander.

Authority: Sections 110 and 301 of the Act give the Administrator authority to adopt policies necessary to implement NAAQS.

Date: August 3, 1987.

Craig Potter,

Assistant Administrator for Air and Radiation.

[FR Doc. 87-17990 Filed 8-6-87; 8:45 am]

BILLING CODE 6560-50-M

40 CFR Parts 51 and 52

[AD-FRL-3244-3]

Regulations for Implementing Revised Particulate Matter Standards; Correction

AGENCY: Environmental Protection Agency (EPA).

ACTION: Final rule; correction.

SUMMARY: The EPA is correcting errors in the regulations for implementing the revised particulate matter standards which appeared in the Federal Register on July 1, 1987 (52 FR 24672).

FOR FURTHER INFORMATION CONTACT: Mr. Daniel deRoeck at (919) 541-5593 (FTS 629-5593).

SUPPLEMENTARY INFORMATION: The EPA has promulgated revisions to its regulations for the review of new and modified sources and the prevention of significant deterioration of air quality. These revisions address the fact that EPA has revised its national ambient air quality standards for particulate matter. The revised regulations contained errors

UNITED STATES ENVIRONMENTAL PROTECTION AGENCY
Office of Air Quality Planning and Standards
Research Triangle Park, North Carolina 27711

21 SEP 1987

MEMORANDUM

SUBJECT: Ambient Air Definition

FROM: G.T. Helms, Chief
Control Programs Operations Branch

TO: Bruce P. Miller, Chief
Air Programs Branch, Region IV

We are in receipt of your memorandum of August 17, 1987, regarding ambient air. In response to your request, we have considered the need for clarification of the Environmental Protection Agency's (EPA) policy on prevention of significant deterioration (PSD) increment consumption on rooftops and whether the May 16, 1985, Regional Meteorologists memo needs to be revised to avoid ambiguous guidance.

With respect to PSD increments and rooftops, EPA's policy is contained in Joseph Cannon's memo of June 11, 1984. As you correctly pointed out, PSD increment consumption does not apply at the tops of buildings. With respect to the Regional Meteorologists memo, that memo does not attempt to define ambient air beyond what is currently contained in the Code of Federal Regulations and clarified by Senator Randolph in 1980. The meteorologists memo addresses technical modeling concerns and states that for modeling purposes, receptors will be placed everywhere the general public has access outside of contiguous plant property, e.g., rooftops. Subsequent decisions on use of the pollutant concentrations calculated at the receptors is determined by the definition of ambient air and EPA policy and guidance, such as the Cannon memo. Thus, we conclude that the meteorologists memo contains clear guidance on the placement of receptors when modeling and the Cannon memo defines rooftops as not ambient air when calculating increment consumption.

I hope this information is helpful to you.

cc: Joseph Tikvart
Richard Rhoads
Darryl Tyler

UNITED STATES ENVIRONMENTAL PROTECTION AGENCY

SEP 23 1987

MEMORANDUM

SUBJECT: Review of State Implementation Plans and Revisions for Enforceability and Legal Sufficiency

FROM: J. Craig Potter
Assistant Administrator
for Air and Radiation

Thomas L. Adams Jr.
Assistant Administrator for Enforcement
and Compliance Monitoring

Francis S. Blake
General Counsel
Office of General Counsel

TO: Addressees

One critical function that your offices perform is to assure that regulations developed for stationary sources by the States under the Clean Air Act are enforceable and legally sufficient. Our regulations require that the state implementation plans ("SIPs") must "be adopted as rules and regulations enforceable (emphasis added) by the State agency" (40 C.F.R. §51.281 (1987)). We are concerned that review of SIPs for enforceability has not been receiving adequate attention. The Agency sometimes experiences difficulties in its efforts to enforce the current rules because they are not sufficiently clear. The Regional Offices are at the forefront of the federal SIP approval process. The purpose of this memorandum is to remind you of the importance of doing the review necessary to assure that all SIP plans and revisions are enforceable and in conformance with the Act. Please do not forward for approval SIPs which fail to satisfy the enforceability criteria in this memorandum.

Background

Recent information indicates that the attention being paid to SIP approvals is declining, particularly for enforceability. The Office of General Counsel reviews regulations as to their adequacy under applicable law and Agency policy, but not for enforceability. This void is not being filled by other offices. Often, the problems with enforcing the regulations are not immediately obvious and only become known where a case or issue focuses on the particular regulation. At the October 1986

Annapolis meeting of Air Program Directors and Regional Counsel Air Branch Chiefs, a number of problems in recent enforcement cases due to difficulty in interpreting and enforcing regulations were discussed. With the recent work being done to address the nonattainment problem, it is even more critical that regulations be clear and enforceable.

It is appropriate that the Regional air compliance staff and the Regional Counsel's Office have primary responsibility for this enforceability review because they have the most direct experience in compliance and rule interpretation. They also have resources allocated through their workload models specifically for SIP review.

Timing of Review

The Regions should try to review developing State SIP provisions prior to final approval by the State, when the provisions are at their most malleable stage. In line with this, each Region should provide its States with a copy of the implementing guidance associated with this memorandum and a briefing which outlines the enforceability requirements for new SIP submittals. If we provide the States with more explicit guidance and make earlier contacts to resolve problems, we can avoid instances where EPA is pressured to settle for a flawed regulation only because it is better than its predecessor.

Enforceability Criteria

Your review should ensure that the rules in question are clearly worded and explicit in their applicability to the regulated sources. Vague, poorly defined rules must become a thing of the past. SIP regulations that deviate from this policy are to be disapproved pursuant to Section 110(a) of the Clean Air Act, with appropriate references in the C.F.R. Specifically, we are concerned that the following issues be directly addressed. The rule should be clear as to who must comply and by what date. The effect, if any, of changed conditions (e.g., redesignation to attainment) should be set forth. The period over which compliance is determined and the relevant test method to be used should be explicitly noted. Provisions which exempt facilities under certain sizes or emission levels must identify explicitly how such size or level is determined. Also, provisions which allow for "alternate equivalent techniques" or "bubbles" or any other sort of variation of the normal mode of compliance must be completely and explicitly defined and must make clear whether or not EPA case-by-case approval is required to make such a method of compliance federally effective.

Conclusion

SIP revisions should be written clearly, with explicit language to implement their intent. The plain language of all rules, as well as the related Federal Register notices, should be complete, clear and consistent with the intended purpose of the rules. Specific review for enforceability will be a further step in improving the overall SIP process and structure.

We have attached detailed guidance to assist you in implementing this memorandum.

Attachment

Addressees:

Regional Administrators
Regions I-X

Regional Counsels
Regions I-X

Air Management Division Directors
Regions I, III and IX

Air and Waste Management Division Director
Region II

Air, Pesticides, and Toxics Management Division Directors
Regions IV and VI

Air and Radiation Division Director
Region V

Air and Toxics Division Directors
Regions VII, VIII and X

cc: Deputy Regional Administrators
Regions I-X

Regional Counsel
Air Contacts
Regions I-X

Air Compliance Branch Chiefs
Regions II, III, IV, V, VI, IX

Air Program Branch Chiefs
Regions I-X

Darryl Tyler, Director
Control Programs Development Division

Gerald Emison, Director
Office of Air Quality Planning and Standards

cc: John S. Seitz, Director
Stationary Source Compliance Division
Office of Air Quality Planning and Standards

Alan W. Eckert
Associate General Counsel
Air Division

Michael S. Alushin
Associate Enforcement Counsel
Air Enforcement Division

UNITED STATES ENVIRONMENTAL PROTECTION AGENCY

SEP 23 1987

MEMORANDUM

SUBJECT: Review of State Implementation Plans and Revisions for Enforceability and Legal Sufficiency

FROM: Michael S. Alushin
Associate Enforcement Counsel
for Air Enforcement

Alan W. Eckert
Associate General Counsel
Air and Radiation Division

John S. Seitz, Director
Stationary Source Compliance Division
Office of Air Quality Planning and Standards

TO: Addressees

This is to provide implementing guidance on the memorandum issued by J. Craig Potter, Thomas Adams and Francis Blake on this date relating to review of SIP plans and revisions for enforceability and legal sufficiency. We urge you to provide copies of these memoranda to your State Agency Directors.

Applicability

This guidance applies to all SIP proposals which have not completed the state or local agency legal and procedural requirements for SIPs. For proposals that have not yet been submitted to the Regional office for action, the state and local agencies have forty-five (45) days from the date of this guidance to submit such proposals for review in order for the proposal to be considered under previous procedures. SIP packages currently in Headquarters will undergo the usual review but will be returned to the Regions if they contain deficiencies which raise significant questions as to whether the regulation would be enforceable.

Enforceability Criteria

The notion of enforceability encompasses several concepts. At the most basic level, a regulation must be within the statutory authority of the promulgating agency. For example, some states have statutory restrictions or prohibitions on the promulgation of regulations more restrictive than the federal counterpart.

Although we should generally defer to a State's interpretation of the scope of its authority, when there is real doubt we should, at a minimum, consult the responsible State Attorney to be certain the issue has been considered and resolved. When appropriate, an opinion letter should be obtained from the State Attorney General.

Please ensure that the following additional issues are directly addressed.

° Applicability

It should be clear as to whom the regulation applies. The SIP should include a description of the types of affected facilities. The rule should also state in which areas the rule applies (entire state, specific counties, nonattainment, etc.) and advise the reader that State administrative changes require a formal SIP revision. Also, some regulations might require a certain percentage reduction from sources. The regulation should be clear as to how the baseline from which such a reduction is to be accomplished is set. In some cases it may be necessary for enforcement purposes and independent of Clean Air Act requirements for the SIP to include an inventory of allowable and actual emissions from sources in the affected categories in order to set the above baseline.

° Time

The regulation should specify the required date of compliance. Is it upon promulgation, or approval by EPA, or a future date certain? Future effective dates beyond the approved or proposed attainment date should not be allowed unless the related emissions reductions are not needed for attainment. Also, the regulation should specify the important dates required of any compliance schedule which is required to be submitted by the source to the state.

° Effect of Changed C· ıditions

If changed circumstances effect an emission limit or other requirement the effect of changed conditions should be clearly specified. However, you should not approve state regulations which tie the applicability of VOC control requirements to the nonattainment status of the area and allow for automatic nullification of the regulations if the area is redesignated to an attainment status. Such regulations should continue to apply if an area is redesignated from nonattainment to attainment status unless a new maintenance demonstration supporting a change in the rule's applicability is submitted and approved by EPA.

° Standard of Conduct

The regulation must be sufficiently specific so that a source is fairly on notice as to the standard it must meet. For example, "alternative equivalent technique" provisions should not be approved without clarification concerning the time period over which equivalency is measured as well as whether the equivalency applies on a per source or per line basis or is facility wide.

° Incorporation by Reference

Some federal regulations are inappropriate for adoption by reference. For example, a state intending to enforce PSD regulations adopted by reference must adopt 40 C.F.R. §52.21, not 40 C.P.R. §51.166, as only the former is written in a form imposing obligations on permit applicants. Even then, changes may have to be made to take into account the difference between the State's situation and EPA's.

° Transfer Efficiency

Some states have attempted to provide particular VOC sources with relaxations of compliance limits in return for improvements in the efficiency with which the sources use the pollutant producing material. Any rules allowing transfer efficiency to be used in determining compliance must be explicit as to when and under what circumstances a source may use improved transfer efficiency as a substitute for meeting the SIP limit. Such provisions must state whether EPA approval is required on a case-by-case basis. Also, such provisions may not simply reference the NSPS auto coating tables for the transfer efficiency. The improvement should be demonstrated through testing and an appropriate test method should be set forth. Implied improvements noted by the NSPS auto coating TE table are not to be accepted at face value.

° Compliance Periods

SIP rules should describe explicitly the compliance time frame associated with each emission limit (e.g. instantaneous, stack test, 3 hour average or daily). The Regions should not assume that a lack of specificity implies instantaneous compliance. The time frame or method employed must be sufficient to protect the standard involved.

° Equivalency Provisions and Discretionary Emission Limits

Certain provisions allow sources to comply via "bubbles" or "alternate equivalent techniques" or through mechanisms "as approved by the Director." These provisions must make it

clear as to whether EPA approval of state granted alternative compliance techniques is required on a case-by-case basis in order for the changed mode of compliance to replace the existing federally enforceable requirement. If EPA case-by-case approval will not be required, then specific, objective and replicable criteria must be set forth for determining whether the new arrangement is truly equivalent in terms of emission rates and ambient impact. Such procedures must be consistent with the control levels specified in the overall SIP control strategy and must meet other EPA policy requirements, including the "Emissions Trading Policy", 51 Fed. Reg. 43814 (1986), in relevant instances.

° Recordkeeping

The SIP must state explicitly those records which sources are required to keep to assess compliance for the time frame specified in the rule. Records must be commensurate with regulatory requirements, and must be available for examination on request. The SIP must give reporting schedules and reporting formats. For example, these rules must require daily records if the SIP requires daily compliance. Additionally, the recordkeeping must be required such that failure to do so would be a separate violation in itself.

° Test Methods

Each compliance provision must list how compliance is to be determined and the appropriate test method to be used. The allowable averaging times should be explicit. Both the test method and averaging times employed must be sufficient to protect the ambient standard involved.

° Exemptions

If sources under a certain size are exempted from control requirements, the regulation must identify how the size of a particular source is to be determined.

° Malfunction and Variance Provisions

Any malfunction or variance exemptions must be clear in their substantive application and in how they are triggered. The rule must specify what exceedances may be excused, how the standard is to be applied, and who makes the determination.

Conclusion

We appreciate your attention to this matter and hope that the specific review for enforceability will be a further step in improving the overall SIP process and structure. To assist you, we have attached an enforceability checklist. This checklist should be included as part of your technical support packages in all future SIP packages.

Please contact the appropriate staff attorney in the Office of General Counsel or the Office of Enforcement and Compliance Monitoring should you have any questions concerning issues of enforceability in particular instances. Please contact Tom Helms, OAQPS, FTS-629-5526, for other questions concerning implementation of this guidance.

Attachment

Addressees:

Regional Administrators
Regions I-X

Regional Counsels
Regions I-X

Air Management Division Directors
Regions I, III and IX

Air and Waste Management Division Director
Region II

Air, Pesticides, and Toxics Management Division Directors
Regions IV and VI

Air and Radiation Division Director
Region V

Air and Toxics Division Directors
Regions VII, VIII and X

cc: Deputy Regional Administrators
Regions I-X

Regional Counsel
Air Contacts
Regions I-X

Air Compliance Branch Chiefs
Regions II, III, IV, V, VI, IX

Air Program Branch Chiefs
Regions I-X

Darryl Tyler, Director
Control Programs Development Division

Gerald Emison, Director
Office of Air Quality Planning
and Standards

Attachment

SIP APPROVABILITY CHECKLIST- ENFORCEABILITY Revision a test method, emission limit or recording keeping procedures on a existing reg. Established in a new reg for a source or industry.

SIP Package No. _____ Date Rec. _____ Date Due _____

STATE: _____

Subject Matter: _____

_____

(Specific Provision and Description)

Enforceability Analysis	State Submittal (list responses)	EPA Requirement	Approvability (Approvable or Not)
1. Applicability			
a. What sources are being regulated?		Clarity	
b. What are criteria for exemption?		Clarity	
c. Is calculation procedure for exemption clearly specified?		Example calculation or clear explanation of how to determine exemption (line by line, etc.)	
d. Is emission inventory listed in the background document of the attainment demonstration?		Inventory including allowable and actual emissions in source category should be included, for enforcement purposes and independent of any Clean Air Act requirements, in the attainment demonstration if such data is necessary for determining baselines in regulations.	

Enforceability Analysis	State Submittal	EPA Requirement	Approvability (Approvable or Not)
e. Is the averaging time(s) used in the rule different from that of the ambient standard?		The averaging time in the rule must be consistent with protecting the ambient standard in question. Normally, it should be equal to or shorter than the time associated with the standard. Longer term averaging is available only in limited instances provided that the ambient standard is not compromised.	
f. What are the units of compliance (lbs VOC per gallon of solids applied less water, grains per standard cubic foot?)		Clearly stated in the rule	
g. Is bubbling or averaging of any type allowed? If yes, state criteria. Could a U.S. EPA inspector independently determine if the criteria were met? Does EPA have to approve each case?		Explicit description of how averaging, bubbling, or equivalency is to be determined. VOC equivalency must be on a "solids applied" basis. Any method must be independently reproducible. Provision must be explicit as to whether EPA case-by-case approval required. If provision intended to be "generic" then EPA bubble policy must be met.	

Enforceability Analysis	State Submittal	EPA Requirement	Approvability (Approvable or Not)
h. If there is a redesignation, will this change the emission limitations? If yes, which ones and how?		Regulation may not automatically allow for self nullification upon redesignation of area to attainment. New maintenance demonstration required in order to drop regulation.	
2. Compliance Dates			
a. What is compliance date?		Must not be later than approved or about to be approved date of attainment unless emission reductions not necessary for attainment. In some cases, it will be necessary for the regulation to specify dates in compliance schedules that are required to be submitted by source to state.	
b. What is the attainment date?			
3. Specificity of Conduct			
a. What test method is required?		Test method must be explicitly stated.	
b. What is the averaging time in compliance test method?		Averaging time and application of limit must be explicit.	
c. Is a compliance calculation or evaluation required? (i.e., daily weighted average for VOC).			
d. If yes to "c," list the formula, period of compliance, and/or		Formula must be explicit.	

Enforceability Analysis	State Submittal	EPA Requirement	Approvability (Approvable or Not)
4. Incorporation by Reference			
a. What is state authority for rulemaking?			
b. Are methods/rules incorporated by reference in the right manner.			
5. Recordkeeping			
a. What records are required to determine compliance?		Clarity	
b. In what form or units (lbs/gal, gr/dscf, etc.) must the records be kept? On what time basis (instantaneously, hourly, daily)?		Records to be kept must be consistent with units of compliance in the performance requirements, including the applicable time period.	
c. Does the rule affirmatively require the records be kept?		There must be a clear separately enforceable provision that requires records to be kept.	

Enforceability Analysis	State Submittal	EPA Requirement	Approvability (Approvable or Not)
6. Exemptions a. List any exemptions allowed. b. Is the criteria for application clear?		Must be clearly defined and distinguishable from what constitutes a violation.	
7. Malfunction Provisions		Rule must specify what exceedances may be excused, how the standard is to be applied, and who makes the determination.	

UNITED STATES ENVIRONMENTAL PROTECTION AGENCY
Office of Air Quality Planning and Standards
Research Triangle Park, North Carolina 27711

9 OCT 1987

MEMORANDUM

SUBJECT: Processing of Stack Height Negative Declarations

FROM: G. T. Helms, Chief
Control Programs Operations Branch

TO: Chief, Air Branch
Regions I-X

The purpose of this memorandum is to clarify and revise some points in my September 3, 1987, memorandum entitled "Technical Support for Stack Height Negative Declarations." That memorandum included a list of minimum requirements for determining adequate documentation with three additional guidance documents attached. One of the attachments was the August 28, 1987, memorandum from Charles Carter of the Office of General Counsel (OGC) and me to Bruce Miller of Region IV, entitled "Documentary Support for Deficiencies in Stack Height Review Packages." Because several actions are being delayed by inadequate documentation, we sent copies of the August 28 memorandum to all ten Regions as examples to alert them to these problems.

The Tennessee State implementation plan (SIP) was used as an example because we believed it had deficiencies that were common to other negative declaration packages. The use of the Tennessee evaluation as an example was not intended to single out Region IV as having more problems with documentation than other Regions, although the tone of the memorandum might have given this impression. I am sorry for this misrepresentation.

In a recent conference call with OGC and Region IV, Region IV suggested three clarifications and revisions to the guidance that we included in the August 28, 1987, and September 3, 1987, memorandums. We believe these should be incorporated. They are as follows:

1. The requirement for a list of sources evaluated for negative declarations applies only to sources greater than 65 meters.

2. For grandfathering documentation, the date the source was built is not essential, but the type and date of the documentation that the source was built prior to December 31, 1970, must be listed. However, whenever the actual construction date is submitted by the State, it should be included.

NOTE: Attachments 1 and 2 are not included in the Policy and Guidance Notebook.

3. It is not necessary that a Region give assurances that they are confident the documentation is adequate; however, regional management should be satisfied that the State submission meets the requirements of the stack height regulation.

We also agreed during the conference call that the Delaware negative declaration (#3356) (See Attachment 1) includes a good tabular form to present the good engineering practice (GEP) review in a Federal Register notice or the accompanying technical support document (TSD). Attachments 2 and 3 present expanded tables for stacks over 65 meters and for sources over 5000 tons per year. The notice does not have to include tables in these formats, but the information required in them should be discernable from the notice and/or TSD. For example, the Delaware table in Attachment 1 is a shortened version of Attachment 2, since no stacks exceeded GEP.

I hope this memorandum clarifies my past correspondence and gives you a better understanding of the documentation necessary for processing stack height negative declarations. If you have any questions, please call Ted Creekmore (629-5699) or me (629-5526). Thank you for your patience during the processing of these complex SIP revisions.

Attachments

cc: Charles Carter
Pat Embrey
Sharon Reinders
Richard Roos-Collins
Ted Creekmore
Dave Stonefield
Eric Ginsberg
John Silvasi

UNITED STATES ENVIRONMENTAL PROTECTION AGENCY
WASHINGTON, D.C. 20460

MAR 31 1988

OFFICE OF
AIR AND RADIATION

MEMORANDUM

SUBJECT: Transmittal of OAQPS Interim Control Policy Statement

FROM: John S. Seitz, Director
Stationary Source Compliance Division
Office of Air Quality Planning and Standards

TO: Air Management Division Directors
Regions I, III and IX

Air and Waste Management Division Director
Region II

Air, Pesticides and Toxics Management Division Directors
Regions IV and VI

Air and Toxics Division Directors
Regions VII, VIII and X

Air and Radiation Division Director
Region V

Attached is the final Interim Control Policy for developing compliance schedules that require replacement or upgrading of existing air pollution control equipment. Comments solicited from the Air Compliance and Air Programs Branch Chiefs, OECM, and SSCD by a memorandum of January 20, 1988, have been addressed, resulting in a few minor language clarifications and one change to the policy.

The change resulted from a comment on the requirement to maintain existing controls in the interim. In lieu of maintaining the operation of the existing control equipment during the interim period, allowance has been made for installing interim controls which may be more effective in reducing emissions. The usage of interim controls may not result in a delay of the installation of the final control equipment.

Also, clarification has been made concerning the installation of redundant equipment on new control systems. Design requirements mentioned in this policy apply to those sources which require continuous operation of the process equipment. Temporary shutdown during maintenance periods is always a possible compliance alternative to adding redundant control equipment. The policy now states this specifically.

One notable recommended change has not been included. The comment was made that performance bonds should not be applied to activities which may be beyond the control of the source, such as the delivery of materials. Installation of control equipment frequently involves the activities of several contractors and requires careful scheduling to avoid delays. Late delivery of equipment can have a serious adverse effect on the ability of a source to meet a tight installation schedule. A source must take the necessary steps to select the most reliable, rather than the lowest cost vendor, to ensure that schedules are met.

Thank you for your assistance with the development of this policy statement. If you have questions concerning it, please contact Pam Saunders of my staff at FTS 382-2889, EMail EPA6264.

Attachment

INTERIM CONTROL POLICY

PURPOSE

The purpose of this policy is to provide uniform criteria for developing final compliance requirements, schedules, and interim requirements for sources in situations where failing, deteriorating or inadequate air pollution control equipment must be replaced or upgraded.

APPLICABILITY

This policy applies to situations where a determination to rebuild or replace existing control equipment has been made. Situations mentioned in this policy may also be subject to applicable civil penalties as stated in the Civil Penalty Policy.

OBJECTIVES

The objectives of this policy are to require subject sources to:

1. Minimize and continuously monitor emissions during the interim period;

2. Attain final and continuing compliance as quickly as feasible using all available means;

3. Maintain continuous compliance in the future by appropriate design of the final control system, including the continuous monitoring of excess emissions.

POLICY

INTERIM MEASURES

Interim measures combined with continued operation and maintenance of existing controls must be required wherever existing controls are inadequate. During the interim period until the new or upgraded control equipment is operational and the source is in compliance, emissions from the source must not be allowed to increase. The existing though inadequate control equipment must remain operational to the maximum extent possible, including being maintained and

repaired, until such time that construction or tie-in of new equipment requires its shutdown or removal. In lieu of maintaining the existing though inadequate control equipment, interim controls which offer a higher degree of emission reduction and are readily and reasonably available may be installed. The use of such interim controls shall not unduly delay the installation of final control equipment.

When existing control equipment must be taken off line to tie-in or complete construction of new or upgraded equipment, additional interim controls or other interim measures are required to ensure no increase in excess emissions occurs during the tie-in period. Such measures may include installation of additional temporary control equipment or operational controls, e.g., curtailment of production rates, relocation of production to complying process lines or facilities, purchase of power or product elsewhere as needed, or temporary shutdown.

The source should be required to implement an interim continuous emissions monitoring program, to enable the agency to monitor the emissions performance of the source during the interim period.

COMPLIANCE REQUIREMENTS

All compliance schedules must contain specific milestones for design, construction, installation and operation of new or rebuilt control equipment. The milestones should reflect the shortest feasible schedule for achieving compliance and should include, but not be limited to, the following:

1. Submittal of a control plan, including necessary permit applications, to agency;

2. Award of major contract(s) to vendors;

3. Delivery of materials or control equipment;

4. Initiation of off-site fabrication or on-site construction or installation of the control equipment;

5. Completion of installation or rebuilding of control equipment;

6. Testing and demonstration of final compliance by the source.

Performance bonds or stipulated penalties must be associated with every milestone specified in the schedule. To promote an expeditious schedule, the use of prefabricated equipment or the use of double or triple shifts for the construction or installation of equipment should be considered.

CONTINUOUS COMPLIANCE AND MONITORING REQUIREMENTS

A fundamental principle of this policy is that the source must make every possible effort to maintain continuous compliance after the new or rebuilt equipment becomes operational. To assure continuous compliance during future maintenance periods, all new or upgraded equipment must normally include spare compartments (or units) and parts (or equipment) that can maintain emissions at a compliance level while the remainder of the equipment is being replaced, repaired, or maintained. In lieu of this, those sources that do not require continuous availability of the process equipment may shut down during such periods.

To assure the ability of the agency to monitor continuous compliance in the future, the source must periodically report excess emissions to the appropriate air pollution control agency. This may be accomplished by requiring the installation, operation and reporting of data from continuous emissions monitoring equipment. These requirements are to be set out specifically in the compliance agreement.

PN 114-88-03-31-006

UNITED STATES ENVIRONMENTAL PROTECTION AGENCY
WASHINGTON, D.C. 20460

MAR 31 1988

OFFICE OF
AIR AND RADIATION

MEMORANDUM

SUBJECT: Compliance Monitoring Strategy for FY 89

FROM: John S. Seitz, Director
Stationary Source Compliance Division
Office of Air Quality Planning and Standards

TO: Air Management Division Directors
Regions I, III and IX

Air and Waste Management Division Director
Region II

Air, Pesticides, and Toxics Management Division Directors
Regions IV and VI

Air and Radiation Division Director
Region V

Air and Toxics Division Directors
Regions VII, VIII and X

I am transmitting to you the attached Compliance Monitoring Strategy (CMS) for implementation in FY 89. This strategy is the culmination of a multi-year effort that focused on addressing some very important issues of the Air compliance program. I feel the CMS makes major strides in guiding our surveillance activities in a direction that will dramatically improve the program.

As you know, the Compliance Monitoring Strategy will replace the Inspection Frequency Guidance (IFG) in FY 89. The CMS emphasizes flexibility with accountability. This strategy recommends developing a comprehensive inspection plan that identifies all sources or source categories committed to be inspected by the State agency (means State or local agency throughout) during their fiscal year.

The State inspection plan must address national priorities and may also include inspections not normally of EPA concern. The plan, to fully utilize the flexibility offered, will be organized around four groups of sources.

Group I: Traditional stationary sources such as Class A and known Class B SIP, NSPS, and operating NESHAPs sources.

Group II: Asbestos D&R Strategy contractors.

Group III: Small VOC Compliance Strategy sources.

Group IV: Sources of State concern.

High Points of the New Strategy

New features of the Compliance Monitoring Strategy are the following.

(1) Ability to address local air pollution concerns.

The CMS provides State agencies with the discretion to address significant local air pollution concerns such as citizen complaints, odor problems, and other localized toxic, hazardous, and nuisance issues. These types of concerns may not be national priorities, but are legitimate resource expenditures under this strategy. Group IV is where local issues and new State-specific initiatives may be addressed.

(2) Use of inspection targeting.

The concept of inspection targeting provides an approach to systemically direct resources toward the most significant problems. The approach employed is a PC-based model using multiple targeting criteria to determine inspection frequency. The targeting model accepts source specific targeting data supplied by the State inspector in such areas as plant emissions, compliance information, and air quality factors. The model assigns values to these data, and mathematically combines the values to produce a ranking of sources to be inspected along with the estimated resource costs.

(3) Account for the total inspection activity.

This strategy will credit a program for its total inspection activity. The total State inspection resource budget must be provided to EPA for this key aspect to be accomplished effectively.

(4) Maintain minimum resource expenditure levels in the inspection program.

Minimum resource expenditure levels for Group I sources are defined to be the average inspection effort over the last three years. The levels for Group II asbestos D&R contractors are those reported in the SPMS for the latest fiscal year. Group III resource levels are the minimum number of inspections required by the Small VOC Source Compliance Strategy or supplied by the State, whichever is larger. Group IV levels are generally supplied by the State.

5) Focus on national priorities.

Each year the Compliance Monitoring Strategy will reflect the Air program's stated national priorities as identified in EPA's Operating Year Guidance. These national priorities are encompassed by Groups I, II, and III.

Comments

The responses I reviewed from both State and EPA personnel were universally supportive of the general approach in the CMS. I thank you for your time. The kinds of concerns expressed typically revolved around the following issues.

1. Targeting model input data may not be known by the inspector.

Since the model's input is often qualitative and is so critical to effective source compliance understanding, the lack of such data is a key finding. In addition, experience has shown that such a structured model helps guide an inspector toward the needed data to carry out effective source inspections and provides supervisors with valuable management control information.

2. More resources (Regional and State) will be needed to implement the CMS with targeting.

Our experience has shown that initially more time is required to establish the source inventory, to develop a working database, and to negotiate a plan. However, the initial resource commitment is very dependent upon the current condition of an agency's database. Thereafter, the resource burden is greatly reduced.

Given a principal aim of targeting is to be a more focused use of scarce resources, targeting over time, is expected to realize a resource savings. A program using targeting should find and correct more problems than a program that does not. Therefore, resources may actually go further because of more effective use.

3. The Inspection Frequency Guidance (IFG) should remain an option.

We recognize in some cases, as mentioned in the CMS, the current IFG will be a more viable means for States to meet their inspection commitments. Therefore, the IFG is the alternate approach. However, we strongly encourage the use of the CMS with targeting whenever possible. To further promote the CMS, we intend to monitor, in which States and for what reasons, the CMS is not used.

One final observation, after reviewing the comments I found a more comprehensive reading of the strategy should answer any remaining questions. It became apparent that inadequate attention was given to reviewing the strategy because so many questions and comments were already answered in the draft CMS. I will be happy to discuss with anyone issues associated with implementing and interpreting the CMS, but please read it carefully first.

Next Steps

SSCD has arranged to conduct Regional training (States may be invited as well) in the use of the inspection targeting model and provide on-call technical support. Please contact Howard Wright at FTS 475-7034 to schedule training. To effectively coordinate ten Regions training, Mr. Wright would like to know what Regional dates are suitable for this one day training session. Please notify him of your preferred dates by April 22, 1988.

The diskette containing the model along with the Description and Explanation document will be distributed at the training sessions. For technical support in the model's operation, please contact Perrin Quarles Associates, Inc. at 804-979-3700.

Attachment

cc: Air Compliance Branch Chiefs
Regions II, III, IV, V, VI and IX

Air Program Branch Chiefs
Regions I, VII, VIII and X

MAR 3 1 1988

Compliance Monitoring Strategy

Introduction

The Inspection Frequency Guidance (IFG) will be replaced in FY 1989 by the Compliance Monitoring Strategy (CMS), which provides a more flexible approach for determining State[1] inspection commitments. The CMS emphasizes flexibility with accountability. This strategy recommends the development of a comprehensive inspection plan that identifies all sources or source categories committed to be inspected by the State agency during their fiscal year.

Strategy Components

The CMS has five parts.

(1) Objectives

The Compliance Monitoring Strategy has five objectives.

- To provide the ability to address significant local concerns where they differ from national priorities.
- To ensure effective national oversight of the air compliance monitoring program, to permit its evaluation, and to establish a feedback mechanism.
- To promote the importance of enforcement presence through effective compliance monitoring activities.
- To ensure an adequate level of resource commitment.
- To assure emission standards are met through effective use of compliance monitoring activities.

(2) Requirements

Sources subject to this strategy, if its flexibility is to be fully utilized, are the following.

Group I: Traditional stationary sources - Class A and known Class B SIP, NSPS, and operating NESHAPs sources.

Group II: Asbestos D&R Strategy contractors.

[1] means State or local agency throughout.

Group III: Sources subject to the Small VOC Source Compliance Strategy.

Group IV: Sources of State concern.

The national priorities must be met, or in cases where exceptions are justified, the rationale for the exceptions must be agreed to by EPA. Groups I, II, and III will encompass the national priority categories in FY 1989. However, national priorities may change from year to year.

In FY 1989, the national priorities are the following.

- Class A sources emitting VOC in ozone nonattainment areas. (Group I)

- Class A1 sources emitting TSP, SO2, CO, or NOx in nonattainment areas. (Group I)

- Class A sources emitting any criteria pollutant in attainment or unclassified areas that have known or suspected compliance problems. (Group I)

- Lead SIP and operating NESHAP sources. (Group I)

- Asbestos demolition/renovation contractors per the revised Asbestos Strategy dated March 31, 1988. (Group II)

- Small VOC sources per the Small VOC Source Compliance Strategy dated July 6, 1987. (Group III)

Inspection quality under this strategy must be Level II or higher, as defined by EPA guidance. Furthermore, this strategy will credit a program for its total inspection activity. That is, this approach will account for the total federally-funded compliance monitoring effort including, where it is mutually agreed, the substitution of non-federally regulated source inspections (Group IV) for federally regulated (Group I). It will be necessary to present the rationale for this substitution and to enter only the substituted Group IV sources into CDS.

The inspection targeting model will be run by States wishing to use the flexibility this strategy offers to determine the inspection commitment for Group I sources and those Group IV sources that will be substituted for Group I source inspections. Inspector-supplied data on emissions, air quality compliance history, inspection level, inspection time and inspection frequency are inputs into the model for these sources. The output of the targeting model is a priority ranking of sources to be inspected with cumulative resource needs. Attachment 1 provides further details on the inspection targeting model. Training in the use of the model will be provided at EPA's Regional Offices upon request.

The asbestos and small VOC source strategy requirements, where applicable, will be used to determine the inspection commitments for Groups II and III.

Recognizing the significant departure this strategy is from the IFG, it is expected to take more than one year for widespread implementation of the inspection targeting approach. For that reason, Headquarters will closely monitor the implementation of the CMS to assess progress and to make necessary adjustments. Therefore, the Regions are required to report in which States, and for what reasons, the inspection targeting approach is not used. This information should be submitted annually to SSCD along with each State's inspection plan.

The strategy requires a minimum inspection resource base (baseline) be established for each group. It will be used by the EPA Regions as a benchmark to evaluate their States' inspection plan submittals. The minimum baseline for each State is established in FY 1989 in the following way.

Group I: The average number of inspections from the last three years, as reported in CDS.

Group II: The number of inspections in the last fiscal year, as reported in SPMS.

Group III: The number of inspections the Small VOC Source Compliance Strategy requires, or, supplied by the State, whichever is larger.

Group IV: The number of inspections supplied by the State.

The total level, i.e., the summation of the minimum baselines for Groups I-IV, used to established the baseline in FY 1989 shall not be reduced in subsequent years.

(3) State Inspection Plan Submittal.

Each inspection plan submittal will present how that State will address national priorities and will justify exceptions to the national priorities. The plan will also identify specific sources to be inspected, allocate the total inspection budget among source groups, and cover other issues that are necessary to meet the Compliance Monitoring Strategy objectives and requirements.

The targeting model should be used to determine Group I and specific Group IV sources to be included in this inspection plan as well as their priority of inspection. Groups II and III will be addressed by their national strategy requirements and by the resources allocated to each group. For other Group IV source inspections, a block resource allocation will be made by the State in their plan submittal.

These steps will allow the State agency to develop their initial comprehensive inspection plan, which will be submitted to the EPA Region for review. To justify exceptions to national priorities, the State must submit the basis for their decisions, such as the inspection targeting model inputs and results.

(4) Final Inspection Plan Negotiation

The final comprehensive State inspection plan will be agreed to by both the EPA Region and the State. This plan will result in the State's inspection commitment to EPA for FY 1989. The resources necessary to fulfill this commitment are provided by the Section 105 federal grant and State matching funds.

The final mutually accepted plan will have two parts.

(a) Inspection commitments and associated resource allocations.

- Group I sources will be identified by name.
- Group II contractors will be identified by name.
- Group III sources will be identified by category with the estimated resources allocated to this group.
- Group IV sources will be identified by name if they are to be traded off for Group I source inspections, otherwise an estimated resource allocation will be assigned this group.

(b) Accountability measures such as data to be reported in CDS to measure the States fulfillment of their inspection plan commitments. (see Reporting and Evaluation component).

The EPA Region and State will use the following to finalize the plan.

- State-supplied input and output from the inspection targeting model's ranking of Groups I and IV sources.

- National strategies for asbestos D&R and small VOC sources.

- Other EPA-established national priorities.

- State-supplied inspection resource budgets by group.

- Baseline EPA estimates of inspection resource budgets by group. This gives EPA a benchmark to assess the State-supplied inspection resource budget.

(5) Reporting and Evaluation

Improving upon the current IFG, this strategy will emphasize effective and timely reporting of accountability measures, evaluate each year's results of plan implementation, and build the resulting recommendations into guidance for the upcoming operating year.

The principal data management tool EPA will use for evaluating the implementation of this strategy is the CDS. The specific sources, as well as data needed for evaluation, should in most cases be tracked in the CDS.

The data that must be kept current and complete in the CDS for Groups I, II, and III sources and those specific Group IV sources that are substituted for Group I inspections, consistent with existing CDS guidance, include the following.

- source identifier and location information.
- current and historic compliance status.
- key enforcement actions such as inspections and source tests completed, EERs submitted, and malfunction reports.
- pollutant specific classification for all Class A sources and for any sized VOC source in an ozone nonattainment area.
- nonattainment and attainment status code (PAQC).
- pollutant code (PLLT).
- air program code.
- inspection flag.

For other Group IV sources that are not of federal concern, a year end accounting of resources consumed versus the beginning of the year block resource allocation estimates should be discussed at the time of the plan evaluation. This is part of the total inspection activity assessment and provides a complete picture of resource use in the inspection program. These other Group IV sources are not tracked in the CDS.

Additional mechanisms that will be used to monitor and evaluate the implementation of this strategy will be the National Air Audit System and the Section 105 compliance guidelines. The NAAS is presently being revised to accommodate the CMS. The Section 105 compliance guidelines are under development and will be issued this year.

Alternate Approach

In the event that a State and EPA Region cannot work out an inspection plan using the recommended strategy approach, the current Inspection Frequency Guidance plus the Asbestos D&R and Small VOC Source Compliance Strategies will determine the State inspection commitments for the upcoming year. See Attachment 2 for the full text of the current IFG.

For those States that use the current IFG to identify their FY 1989 inspection commitments, an inspection plan must still be submitted to and accepted by the EPA Region. These plans will basically be limited to Groups I, II, and III sources.

The fundamental differences between a State inspection plan developed using the current IFG and one using the full CMS will be the following.

- Group IV source inspections will generally not be in an IFG-based inspection plan.

- An IFG-based inspection plan will not capture an agency's total inspection activity.

- Specific focus on national priorities is not as well defined in an IFG-based inspection plan.

While offering this alternate approach, EPA strongly recommends using the full CMS with inspection targeting whenever possible. However, it is recognized that for such reasons as the lack of suitable software and hardware, a small, easily managed regulated community, an adequate resource base for comprehensive inspection coverage, and an inspection program tied to an operating permit fee system, the CMS with inspection targeting will not be universally appropriate.

Responsibilities

(1) EPA Headquarters

EPA Headquarters is responsible for the annual implementing guidance for the Compliance Monitoring Strategy. It will be issued to the Regional Offices before April of the preceding fiscal year.

In addition, ongoing refinement and training in the use of the inspection targeting model is Headquarters responsibility. It is expected that as more agencies become familiar with the value of targeting to their program, the model will sell itself. After initial training, some level of ongoing support will be necessary for the users of this tool. Headquarters will provide that support.

Finally, Headquarters will evaluate and report the previous year's implementation of the strategy to the Air compliance community in the second quarter of the next fiscal year. The results will be incorporated into the annual implementing guidance and any strategy modifications.

(2) EPA Regional Offices

The Regions are charged with negotiating, approving, and submitting to Headquarters by August the individual State inspection plans for the upcoming federal fiscal year. Along with the inspection plans, the Regions are required to report to Headquarters in which States, and for what reasons, the inspection targeting approach is not used.

In addition, the Regions must ensure that the applicable sources scheduled to be inspected per the negotiated inspection plan are entered and flagged in

CDS on time. The Regions are also responsible for ensuring the appropriate data necessary for evaluation are in CDS or are reported to EPA in a complete and timely fashion.

(3) State Agencies

The State agencies are responsible for providing information and for running the inspection targeting model, where applicable. They are also responsible for meeting the commitments of their negotiated inspection plans. Finally, the State agencies are responsible for ensuring the appropriate data are reported in a timely and complete fashion to the Regional Office or directly into CDS.

When preparing an inspection plan submittal, it is recommended the State use the inspection targeting model for ranking Group I sources, and those Group IV sources that may be substituted for Group I source inspections, on a State-wide level. The inputs and results are then presented at the inspection plan negotiation meeting with EPA.

For local districts that have direct Section 105 grantee status, it is recommended that such districts be ranked using the inspection targeting model separately from other districts in their State. In such a State, the State-wide ranking should be an aggregation of individual local grantee district rankings with the rest of the State. However, as a general practice, running district by district rankings and aggregating them to the State level is discouraged. To do this diminishes a management benefit of the inspection targeting model that allows identifying where current resource distributions may need reallocation.

For Assistance

The EPA Headquarters contact for this strategy is Howard Wright. He can be reached at (202) 475-7034. The contractor for the inspection targeting model is Perrin Quarles of Perrin Quarles Associates, Inc. He can be reached at (804) 979-3700.

Attachment 1

Further Details on the Inspection Targeting Model

The inspection targeting model is jointly funded by Regions V, VIII, and SSCD. It is being piloted in Michigan and Colorado. These efforts have provided a refined product ready for more widespread application.

The model is a computerized program which ranks sources for inspection priority based on information supplied by State agency inspectors. It currently runs on a standard XT or AT personal computer and on an Apple MacIntosh. Approximately 3 megabytes of storage capacity and 512 RAM are required to run the program for a 2,500 source database. The program is menu-driven and requires no special computer knowledge.

What Information is Needed to Use the Model?

Targeting data for each source normally include:

- Source identification and classification information
- Size data (for targeted pollutants)
- Last inspection results
- Other recent compliance history (to the extent available)
- The inspector's assessment of potential upset conditions at the source (with four options)
- The inspector's rating of O&M practices at the source (with four options)
- NAAQS attainment status
- Relative contribution of the source to air quality problems (with four options)
- Whether there are multiple compliance problems and/or multiple pollutant impacts
- The desired inspection frequency for the source
- The required inspection time and relative inspection difficulty for the source
- Other unique targeting considerations that the inspector feels should be considered, as well as the inspector's own rating of the source's inspection priority (on a 1 to 4 scale).

What is Needed to Implement the Program?

The following steps are necessary to start up and maintain the program.

- Compile a list of sources that will be eligible for inspection targeting.

The State must identify all NSPS and NESHAPs sources and all sources over a minimum size (e.g., 10 tpy actual uncontrolled emissions). Inspectors should review this list to make sure that important sources have not been omitted. This review may occur when the inspectors are completing individual data forms. Our experience has shown for the typical State, this

pre-screening of the inventory may take 10 working days of total inspector time during the initial year.

- Prepare targeting data forms for each source included on the targeted source list.

Basic source identification information can be compiled by administrative staff using information normally available in agency reports, emissions inventories, and the like. A data form for each source may be partially filled out by administrative staff, then forwarded to inspectors responsible for the individual sources. Compliance and other unique targeting information would be provided by the inspectors.

To minimize misinterpretation and inconsistency among inspectors and to ensure maximum efficiency, a half-day meeting or work session should be scheduled to review the data form and answer questions. All inspectors should participate. The forms should then be filled out by the inspectors, and checked by a designated reviewer or manager.

If all inspectors participate, the initial meeting and data form completion process should take no more than 3 working days for each inspector.

- Enter targeting data into the computer program.

After targeting data forms have been completed, computer entry may be performed by clerical staff. Initial entry should be made by one person, then checked by another person to ensure accuracy. Experience indicates that initial data entry should require an average of approximately 2 minutes per form and verification should require approximately 1 minute per form.

- Generate ranking and planning reports.

A ranking report may be generated by simple menu driven computer commands. The length of time required to generate the report is dependent on the number of sources and the computer capability. A typical XT processor at 6 mh without a math coprocessor will normally process a 500-source database in 2-3 hours. The printing of the report may be generated in 10-30 minutes depending on the speed and type of printer and computer. These time requirements are significantly reduced by using a 80286 or 80386 based computer system.

- Maintain the database.

Once established, the database may be fairly easily maintained. As new inventory, compliance, or air quality data are obtained, these may be entered directly into the computerized database by inspectors or field support staff. It is also possible to edit the hard copy form for data entry by clerical staff.

Maintaining the program may be accomplished in a single annual update, or it may be accomplished as new data are obtained (e.g., immediately following an inspection). Editing and reentry require less than one-half of the time per form that was required for initial completion and entry.

Summary

The model itself is easy to use for anyone. It was designed for use by inspectors and managers with very limited computer skills. There is a help file accessible at any time as data are being input.

When the ranking and estimated inspection times are coupled with the known resource base, the actual sources planned to be visited annually can easily be determined. As a result, an inspection plan is born. This plan can serve the State agency as an effective management tool for its own inspectors as well as serve to meet the EPA's Compliance Monitoring Strategy requirements.

Final refinement of the targeting model is completed. It is available to all EPA Regions for your testing and familiarization prior to implementation in FY 1989. It is on a floppy disk with accompanying documentation and will be distributed at the time of the Regional training. Headquarters will continue to support this activity with on-call technical assistance.

Attachment 2

Inspection Frequency Guidance

INTRODUCTION

The inspection is the primary compliance assurance method presently available in the air program for validating source performance. Therefore, EPA believes it is imperative that an effective inspection program be implemented in all States. The following guidance on the expected frequency of inspections is intended to balance the need for a nationally-uniform data base to enable an evaluation of the effectiveness of the program with the needs of State and local agencies to make optimal use of their limited resources to address the varied and unique air quality problems faced by each State and locality.

CRITERIA FOR INSPECTION

The frequency of an inspection shall be determined by which requirements are applicable (SIP, NSPS, NESHAPs) and, for SIP and NSPS sources, by whether the source is a Class A1 or A2 source. In cases where more than one program requirement is applicable, the source must be inspected based on the highest frequency of inspection for any of the applicable requirements. It is imperative that all sources be identified by source classification (if applicable) and appropriate air program (SIP, NSPS, NESHAPs) and that these data be duly entered and maintained in EPA's Compliance Data System (CDS).

DEFINITION OF AN INSPECTION

For the purpose of this guidance, a minimally-acceptable State or local compliance inspection (Level II) is an onsite visit to the operating source to assess compliance with at least applicable federal air pollution control requirements. At a minimum, a compliance inspection must be performed for all federally-regulated air pollutants emitted by the source. Also, a source that is regulated for visible emissions should be evaluated using an acceptable reference method. Where a source is federally-regulated for more than opacity, a compliance inspection involving only a visible emissions observation is not generally considered to be a minimally-acceptable compliance inspection.

As part of the minimally-acceptable source compliance inspection, an inspector must record the process operating conditions and, if appropriate, the control device conditions to determine if any significant change has occurred since the last inspection or any process or control operation outside normal or permitted conditions has occurred. It is expected that minimally-acceptable compliance inspections would also include at least an operations log check of process and control equipment including continuous emission monitoring systems logs. It should be noted that these requirements for a minimally-acceptable inspection do not require the direct measurement of operating conditions by the inspector.

CLASS A1 SIP SOURCES

All operating Class A1 SIP sources regulated under the Clean Air Act shall be inspected annually. Annually is construed to mean at least one onsite visit is made to each such source between October and September, corresponding to the federal fiscal year.

There are four permissible exceptions to the Class A1 annual inspection requirement. The first is for sources whose operations are seasonal in nature (e.g., alfalfa dehydrators) and which do not operate more than 90 days per year. This operating time restriction does not need to be included in a permit for a source to qualify. However, the nature of its business should clearly preclude the source from operating more than 90 days per year. To qualify for this exception, a seasonal source should be well-controlled, should not have a history of noncompliance, and should not be located in a nonattainment area for a pollutant that is the determining pollutant for the Class A1 classification. All seasonal sources must in any event be inspected at least once every five years.

The second category is for Class A1 SIP gas-fired combustion facilities (gas turbines, boilers, and internal combustion sources) which are regulated only for sulfur dioxide emissions and which can operate in compliance with the sulfur dioxide emissions limitations without controls.

The third category is Class A1 NSPS and PSD gas turbines that are regulated only for NOx emissions. An annual compliance determination for these sources can be accomplished through record checks without an annual onsite inspection of equipment.

The last category is oil-fired or coal-fired industrial boilers which are Class A1 SIP sources only because of their sulfur dioxide emissions and which can operate in compliance with the sulfur dioxide emission limitations without either controls or use of low sulfur fuel.

To be excepted, sources in these latter three categories should not have a history of noncompliance. All excepted sources shall be inspected at least once every five years.

Exceptions to the annual inspection requirement should be communicated by the Regional Office to EPA's Stationary Source Compliance Division (SSCD) at the start of the inspection year and the data base properly adjusted by the Regional Offices for subsequent analysis and reporting. Regional Offices are encouraged to discuss with SSCD any novel issues which may arise in their discussions with their States.

CLASS A2 SIP SOURCES

Except as noted below, operating Class A2 sources regulated under the Clean Air Act shall be inspected biennially. However, a State may propose a modified inspection scheme to its EPA Regional Office which presents at least the same level of resource commitment but which the State believes is more

responsive to the needs of its air quality program. This can consist of any combination of additional Class A1 SIP inspections, Class A2 SIP inspections, and inspections of other sources regulated under the Clean Air Act. This could include Class B SIP sources in those areas where they are particularly significant. EPA Regional Offices and their States are free to establish whatever approach is best suited to their situation as long as the following conditions are met:

- SSCD must receive information copies of such agreements at the start of fiscal year.

- The State must demonstrate that the modified approach is based on at least the same resource expenditures as would be required to inspect all Class A2 SIP sources on a biennial basis.

- All operating Class A2 SIP sources must be inspected at least once every five years.

NSPS SOURCES

Any operating NSPS-subject source which is Class A1 in size shall be inspected at least once every federal fiscal year. All other NSPS sources shall be treated as Class A2 sources.

NESHAPs SOURCES

All operating nontransitory NESHAP-subject sources shall be inspected at least once every federal fiscal year.

ALTERNATIVES TO CONDUCTING PERIODIC ONSITE INSPECTIONS

An alternative to an onsite visit for purposes of satisfying inspection frequency guidance by the State for any SIP or NSPS source is the use of continuous emission monitoring Excess Emission Reporting (EER) on a quarterly basis in lieu of periodic inspection requirements. An EER is a suitable alternative to an onsite inspection if EER data from the source is at least equivalent to the information that could be obtained from a minimally-acceptable inspection as previously defined. EER data must be submitted for all pollutants emitted by the source for which the source is regulated. The intended use of the EER alternative must be agreed upon between the State and the EPA Regional Office and EPA must receive the name and CDS numbers of all sources covered by the alternative.

Another alternative to an onsite inspection is available for sources whose compliance is based solely on the characteristics of the fuel oil burned (typically percentage of sulfur in the fuel). This alternative is an inspection of the fuel oil supplier's records and a sampling of the supplier's product. To realize the saving of inspector time, a source's fuel oil suppliers must be known and fixed over time. If a source purchases fuel oil from the spot market, has many suppliers, or has suppliers which are not easily monitored by the State, this alternative may not be appropriate.

Memorandum from Emison, G.A., OAQPS, to Air Management Division Director, Regions I, III, and IX, Air and Waste Management Division Director, Region II, Air, Pesticides and Toxics Management Division Director, Regions VII, VIII, and X, Air and Radiation Division Director, Region V. March 31, 1988. (PN 113-88-03-31-048)

TO BE PROVIDED LATER

PN 113-88-03-31-048

UNITED STATES ENVIRONMENTAL PROTECTION AGENCY
WASHINGTON, D.C. 20460

31 MAR 1988

OFFICE OF
AIR AND RADIATION

MEMORANDUM

SUBJECT: Transmittal of Reissued OAQPS CEMS Policy

FROM: Gerald A. Emison, Director
Office of Air Quality Planning and Standards

TO: Air and Waste Management Division Director
Region II

Air Management Division Directors
Region I, III and IX

Air, Pesticides and Toxics Management Division Directors
Regions IV and VI

Air and Toxics Division Directors
Regions VII, VIII and X

Air and Radiation Division Director
Region V

Attached is the OAQPS policy on Continuous Emission Monitoring Systems (CEMS) data. This policy was originally issued on July 28, 1987. However, because of the late transmittal date, FY 1988 implementation of the policy was done voluntarily. The policy, after minor streamlining, is being reissued at this time to insure implementation during FY 1989. It has been streamlined by removing the outdated section called "Future Actions."

In accordance with the Operating Year Plan, FTEs and LOE contract funds have been allocated to the Regional Offices for CEMS and compliance monitoring activities. Implementation of this strategy should help you utilize these available resources more efficiently and effectively.

Furthermore, note that tracking SO_2 CEMS requirements is an element of the FY 1989 Strategic Planning and Management System (SPMS). The FY 1989 SPMS requires determination and reporting of the compliance status of SO_2 sources subject to CEMS requirements. Specifically, these sources are to be identified, and their compliance status determined with respect to CEMS installation, certification, report submission and emission limits. While SO_2 sources are emphasized in SPMS, this measure should be carried out for all sources with CEMS requirements.

If you wish to discuss this further, please contact me or Louis Paley of SSCD at FTS 382-2835.

Attachment

cc: John Calcagni, AQMD
Jack R. Farmer, ESD
William Laxton, TSD
Don R. Clay, OAR
Bruce Armstrong, OPAR
Paul M. Stolpman, OPAR
Michael S. Alushin, AED
Alan W. Eckert, OGC
CEMS Technical Coordinators

UNITED STATES ENVIRONMENTAL PROTECTION AGENCY
WASHINGTON, D.C. 20460

31 MAR 1988

OFFICE OF
AIR AND RADIATION

SUBJECT: CEMS Policy

APPROVED: Gerald A. Emison, Director
Office of Air Quality Planning and Standards

DATE:

Purpose

This states the OAQPS policy, which is effective immediately, on the use of Continuous Emission Monitoring Systems (CEMS) data and provides specific guidance as to how that policy should be implemented.

Definition

CEMS is one of several self-monitoring techniques used by regulatory agencies to monitor continuous compliance of sources. Sampling and analysis of sulfur in fuel to assess SO_2 compliance of sources and recordkeeping for assessment of compliance with volatile organic compound (VOC) emission limitations are two other self-monitoring techniques.

Information

As the air compliance program resolves initial compliance problems and sources install control equipment, efforts to assure continuous compliance become increasingly important. Based on the review of State and Regional programs that promote the use of CEMS, OAQPS has found that CEMS is a valuable tool for assuring continuous compliance. Self-monitoring techniques should be integrated into the air compliance program as a means of assessing stationary source continuous compliance with air quality regulations.

Some of the States which effectively use CEMS data in compliance monitoring and in supplementing or supporting enforcement actions are Washington (with SO_2 and total reduced sulfur data) and Tennessee (with opacity monitoring data). Ohio has a comprehensive program for requiring CEMS in operating permits which has resulted in installation of CEMS on a wide variety of source types. Pennsylvania and Indiana have highly structured CEMS programs, including penalty programs based on reported excess emissions.

Policy

OAQPS is committed to promoting, encouraging and utilizing CEMS data as a compliance assessment measure. Our Office is also committed to the use of CEMS in direct enforcement where CEMS is the compliance test method and for supporting enforcement where CEMS is not the compliance test method. OAQPS encourages the use of CEMS data by States in compliance monitoring and in supplementing or supporting enforcement actions. If it is technically feasible, CEMS requirements should be incorporated into NSR preconstruction reviews, operating permits and resolutions of enforcement actions including consent decrees and administrative orders.

CEMS should be used to assure continuous compliance of sources in both attainment and nonattainment areas. Resources should be allocated to monitor continuous compliance of sources in areas where the greatest environmental benefit is likely to occur. Therefore, priority should be given to NESHAPS sources subject to continuous monitoring requirements (currently 40 CFR 61, subparts F, N, O and V) and to SIP (including major and minor NSR sources) and NSPS sources in nonattainment areas (for the pollutant for which the area is in nonattainment). Next, CEMS should be used to monitor the continuous compliance of NSPS and PSD sources in attainment areas. Sources with excessive emission limit excursions identified by CEMS data should be targeted for follow-up action (on-site inspection or §114 letter). Where CEMS is the compliance test method, CEMS data should be used to identify significant violators. These sources will then be tracked in accordance with the "Timely and Appropriate Enforcement Response Guidance," issued by OAR on April 11, 1986.

There are two different types of CEMS data - direct compliance monitoring data and excess emissions monitoring data. Where CEMS is the compliance test method, the status of the source is established and documented by CEMS data. Compliance status determined by CEMS data should be coded in the Compliance

Data System (CDS). Violations identified by direct compliance monitoring data require appropriate enforcement action including the assessment of penalties. There are plans to modify the CEM Subset of CDS to allow for entry of direct compliance monitoring data. Use of CEMS data for direct enforcement where CEMS is the compliance test method is discussed in "Guidance: Enforcement Applications of Continuous Emission Monitoring System Data," issued by OAQPS and OECM on April 22, 1986.

The second type of CEMS data is where CEMS is not the compliance method. In these cases, CEMS data should be used to monitor the continuous compliance of sources and to initiate follow-up action including on-site inspections, requesting further information, and issuing a notice of violation. This application is also discussed in the aforementioned guidance.

Conclusion

CEMS is an important technique for monitoring the continuous compliance of stationary sources. It should be an expanding component of the air compliance program. Evaluation of CEMS data has been shown to be effective for identifying sources with continuous compliance problems and has allowed agencies to utilize their compliance monitoring resources more effectively.

UNITED STATES ENVIRONMENTAL PROTECTION AGENCY
WASHINGTON, D.C. 20460

APR 22 1988

OFFICE OF
AIR AND RADIATION

MEMORANDUM

SUBJECT: Interim Policy on Stack Height Regulatory Actions

FROM: J. Craig Potter
Assistant Administrator
for Air and Radiation (ANR-443)

TO: Director, Air Management Division
Regions I, III, IX
Director, Air and Waste Management Division
Region II
Director, Air, Pesticides, and Toxics Management Division
Regions IV, VI
Director, Air and Radiation Division
Region V
Director, Air and Toxics Division
Regions VII, VIII, X

On January 22, 1988, the U.S. Court of Appeals for the District of Columbia issued its decision in NRDC v. Thomas, 838 F. 2d 1224 (D.C. Cir. 1988), regarding the Environmental Protection Agency's (EPA's) stack height regulations published on July 8, 1985 (50 FR 27892). Subsequent petitions for rehearing were denied. Although the court upheld most provisions of the rules, three portions were remanded to EPA for review:

1. Grandfathering pre-October 11, 1983 within-formula stack height increases from demonstration requirements [40 CFR 51.100(kk)(2)];

2. Dispersion credit for sources originally designed and constructed with merged or multiflue stacks [40 CFR 51.100(hh)(2)(ii)(A)]; and

3. Grandfathering of pre-1979 use of the refined H + 1.5L formula [40 CFR 51.100(ii)(2)].

A number of pending State implementation plan (SIP) and other rulemaking actions may be affected by this decision in advance of EPA's promulgation of further revisions of the stack height regulations. This includes not only rulemaking packages developed to respond to the 1985 stack height regulations, but also such actions as issuance of new source review (NSR) and prevention of significant deterioration (PSD) permits, permit modifications, SIP revisions

dealing with specific source emission limitations, and redesignations under section 107 of the Clean Air Act. Consequently, until resolution of litigation and completion of any rulemaking activity to respond to the court decision, the following policy will be applied.

In general, actions to approve States' rules may proceed provided appropriate caveat language is inserted which notes that the action is potentially subject to review and modification as a result of the recent court decision. Actions addressing State permitting authority should require States to provide notice that permits are subject to review and modification if sources are later found to be affected by revisions to stack height regulations. Where States currently have the authority to issue permits under fully-approved or delegated NSR and PSD programs, any permits issued prior to EPA's promulgation of revised stack height regulations should provide notice as described above that they may be subject to review and modification. Regional Office staff are requested to contact their State officials and notify them accordingly. Where EPA has retained authority to issue permits, it should also insert appropriate cautionary language in the permit.

The EPA will try to avoid taking source-specific actions that may need to be retracted later. Such actions may include certain emission limitations and good engineering practice demonstrations which reflect dispersion credit affected by the remand. The EPA may approve these State submittals on a case-by-case basis, with the explicit caution that they and the sources affected by them may need to be evaluated for compliance with any later revisions to the stack height regulations, as a result of the litigation. The EPA will continue to process, under normal procedures, any source-specific actions which do not involve the remanded provisions.

Requests for redesignation of areas from nonattainment to attainment which are affected by any of the remanded provisions of the stack height regulations will be put on hold until EPA has completed any rulemaking necessary to comply with the court's remand. This is due to the issue of whether EPA has authority to unilaterally change attainment designations.

During this interim period, the Regional Office staff should review with their States all regulatory actions involving dispersion credits and identify those actions or sources affected by the remanded provisions. The Region should consult with their States on appropriate action for all such packages, consistent with this policy.

If you have any questions regarding the application of this policy, please contact Doug Grano at FTS 629-0870 or Janet Metsa at FTS 629-5313.

cc: D. Clay
A. Eckert
J. Emison
D. Grano
J. Metsa

Attachment B

The following boilerplate, or variations tailored to suit particular situations, should be used in rulemaking actions affected by the stack height remand.

General Addition

"The EPA's stack height regulations were challenged in NRDC v. Thomas, 838 F.2d 1224 (D.C. Cir. 1988). On January 22, 1988, the U.S. Court of Appeals for the D.C. Circuit issued its decision affirming the regulations in large part, but remanding three provisions to the EPA for reconsideration. These are:

1. Grandfathering pre-October 11, 1983 within-formula stack height increases from demonstration requirements [40 CFR 51.100(kk)(2)];

2. Dispersion credit for sources originally designed and constructed with merged or multiflue stacks [40 CFR 51.100(hh)(2)(ii)(A)]; and

3. Grandfathering pre-1979 use of the refined H + 1.5L formula [40 CFR 51.100(ii)(2)]."

Addition for Stack Heights Rules Packages

"Although the EPA generally approves [State's] stack height rules on the grounds that they satisfy 40 CFR Part 51, the EPA also provides notice that this action may be subject to modification when EPA completes rulemaking to respond to the decision in NRDC v. Thomas, 838 F.2d 1224 (D.C. Cir. 1988). If the EPA's response to the NRDC remand modifies the July 8, 1985 regulations, the EPA will notify the State of [__] that its rules must be changed to comport with the EPA's modified requirements. This may result in revised emission limitations or may affect other actions taken by [State] and source owners or operators."

Additions for Stack Negative Declaration Packages

"The EPA is not acting on ____ sources (identified in table form or by asterisk) because they currently receive credit under one of the provisions remanded to the EPA in NRDC v. Thomas, 838 F.2d 1224 (D.C. Cir 1988). The [State] and EPA will review these sources for compliance with any revised requirements when the EPA completes rulemaking to respond to the NRDC remand."

Additions for Stack Height Emission Limitation Changes or Good Engineering Practice Demonstration

The OAQPS and OGC will provide language on a case-by-case basis when the EPA is acting on a source-specific package which is affected by the remand.

Language for Proposed NSR and PSD SIP Approvals

"Under this program, [State] will be issuing permits and establishing emission limitations that may be affected by the court-ordered reconsideration of the stack height regulations promulgated on July 8, 1985 (50 FR 27892). For this reason, EPA requires that the State include the following caveat in all potentially affected permit approvals until the EPA completes its reconsideration of remanded portions of the regulations and promulgates any necessary revisions:

> 'In approving this perm ., [name of agency] has determined that the application complies with the applicable provisions of the stack height regulations as revised by EPA on July 8, 1985 (50 FR 27892). Portions of the regulations have been remanded by a panel of the U.S. Court of Appeals for the D.C. Circuit in NRDC v. Thomas, 838 F.2d 1224 (D.C. Cir. 1988). Consequently, this permit may be subject to modification if and when EPA revises the regulation in response to the court decision. This may result in revised emission limitations or may affect other actions taken by the source owners or operators.'

[State] must make an enforceable commitment to include this caveat in all affected permits before the EPA can take final action approving the [NSR or PSD] program."

Language for Final NSR and PSD SIP Approvals

"Under this program, [State] will be issuing permits and establishing emission limitations that may be affected by the court-ordered reconsideration of the stack height regulations promulgated on July 8, 1985 (50 FR 27892). For this reason, the EPA has required that the State include the following caveat in all potentially affected permit approvals until the EPA completes its reconsideration of remanded portions of the regulations and promulgates any necessary revisions:

> 'In approving this permit, [name of agency] has determined that the application complies with the applicable provisions of the stack height regulations as revised by the EPA on July 8, 1985 (50 FR 27892). Portions of the regulations have been remanded by a panel of the U.S. Court of Appeals for the D.C. Circuit in NRDC v. Thomas, 838 F.2d 1224 (D.C. Cir. 1988). Consequently, this permit may be subject to modification if and when the EPA revises the regulations in

response to the court decision. This may result in revised emission limitations or may affect other actions taken by the source owners or operators.'

[State] has made an enforceable commitment to include this caveat in all affected permits by letter dated [__]. This commitment is being incorporated into the Code of Federal Regulations for the State of [__] as part of EPA's approval action."

See Attachment D for sample CFR amendment.

The Regional Offices are requested to contact those States that currently have permitting authority and request that they include similar language in any permits issued until EPA has completed its reconsideration of the stack height regulations and has promulgated any necessary revisions.

Attachment C

State	AQMD #	Description	Disposition
AZ/CA/NV	3059	Promulgation of Stack Height Regs.	HQ
AZ/CA/NV	3210	App. and Disapp. of Stack Height Req.	RO
SC	3243	Negative Declaration	RO
MS	3330	Mississippi's Negative Declaration	RO
NJ/NY/VI	3418	Stack Height Revisions	RO
WA	3480	Stack Height Rules	HQ
MD	3543	Negative Declaration	RO
AR	3548	Stack Height Rules	HQ
OH	3570	Stack Height Regulations	HQ
TX	3572	Stack Height Regulations	HQ
LA	3592	Revisions to Stack Height Rules	HQ
DE	3600	Stack Height Regulations	HQ
OH	3334	Redesignation of Galia County to Attainment	Hold
SD	3618	Administrative Rules	RO
CO	3623	Negative Declaration	RO

PN 123-88-05-17-016

UNITED STATES ENVIRONMENTAL PROTECTION AGENCY
Office of Air Quality Planning and Standards
Research Triangle Park, North Carolina 27711

MAY 17 1988

MEMORANDUM

SUBJECT: Application of the Interim Policy for Stack Height Regulatory Actions

FROM: John Calcagni, Director
Air Quality Management Division (MD-15)

TO: Chief, Air Branch
Regions I-X

On April 22, 1988, J. Craig Potter, Assistant Administrator for Air and Radiation, issued a memorandum entitled, "Interim Policy on Stack Height Regulatory Actions" (Attachment A). The memorandum requests that the Regional Offices review with their States all regulatory actions involving dispersion credits and determine the appropriate action consistent with the policy. The purpose of today's memorandum is to provide guidance in carrying out the interim policy.

In general, actions taken at this time to approve or disapprove statewide stack height rules which are affected by the remand must include the qualification that they are subject to review and modification on completion of EPA's response to the court decision. Permits issued under the prevention of significant deterioration or new source review programs should also contain caveat language for sources which may be affected by the remand. Attachment B contains example boilerplate language to be inserted into permits and regulatory packages. Note that States must commit to including the caveat before EPA will take final action on packages affecting permitting authority. Those actions not involving the remanded provisions may proceed as usual.

In contrast to our policy regarding the processing of stack height rules, our policy for source-specific State implementation plan (SIP) revisions is to avoid proceeding with actions which may need to be retracted later. You are advised to consult with my staff and the Office of General Counsel staff prior to submitting such rulemaking packages. Affected sources must be deleted from negative declaration packages prepared under the 1985 stack height regulations before EPA can proceed with action on them.

My staff has applied the policy when reviewing packages currently in Headquarters (Attachment C). While proposals to approve (or disapprove) State rules will remain on the Headquarters clock, the Regional Offices are requested to review these packages and provide appropriate boilerplate as soon as possible. Negative declaration packages and final actions on State rules are being returned to the Regional Office clock as more substantial revisions and commitments may be required. The redesignation packages currently in Headquarters which contain sources affected by the remand are being placed on formal hold.

If you have any questions regarding the April 22 policy, today's guidance, or disposition of the SIP's, please contact Janet Metsa (FTS 629-5313) or Doug Grano (FTS 629-0870).

Attachments

cc: R. Bauman
R. Campbell
C. Carter
G. McCutchen
J. Pearson
J. Sableski

bcc: B. Armstrong
P. Embrey
G. Foote
E. Ginsburg
D. Grano
N. Mayer
J. Metsa
S. Reinders
R. Roos-Collins
SO_2 SIP Contacts
Stack Height Contacts, Regions I-X

142

RESPONSE TO QUESTIONS REGARDING PM_{10} STATE IMPLEMENTATION PLAN (SIP) DEVELOPMENT

OFFICE OF AIR QUALITY PLANNING AND STANDARDS
RESEARCH TRIANGLE PARK, NORTH CAROLINA 27711

JUNE 1988

The following are questions regarding implementation that have been raised since the United States Environmental Protection Agency (EPA) promulgated national ambient air quality standards (NAAQS) for particles with an aerodynamic diameter less than or equal to a nominal 10 micrometers (PM_{10}), July 31, 1987. The questions are arranged by subject and the responses were prepared by the Air Quality Management and Technical Support Divisions of the Office of Air Quality Planning and Standards (OAQPS).

RECEPTOR MODELING AND RECONCILING MODELING RESULTS

1. Why should States use dispersion models rather than receptor models?

   Dispersion models are the preferred analytical tool for control strategy development because they estimate concentrations at locations other than the monitoring site. Also, they can more easily analyze for attainment in future years. Receptor models should be primarily viewed as an additional method which will improve confidence in the dispersion model results.

2. Clarify the use of uncertainty of ambient measurements.

   The ambient uncertainty referred to in receptor modeling is the analytical uncertainty of the method which is used to determine the elemental or toxic concentrations. Generally, x-ray fluorescence is used for elemental analysis and this method is more accurate for some elements than others. This difference in accuracy should be reflected in the uncertainties for each element.

3. Are receptor models useful if you are looking at 24-hour samples?

   Multivariate analysis and dispersion models are better suited for annual averaging times. The chemical mass balance and microscopic methods are well suited for 24-hour samples.

4. If we take 15 samples, should we use all of them in a receptor analysis?

   Generally, analyze as many samples as time and budget permit. Priority should be given to analysis of samples that are collected when concentrations are the highest. (Refer to page 7 of Protocol for Reconciling Differences Among Receptor and Dispersion Models.)

5. How does a State reconcile the differences between dispersion and receptor models if they are based upon different years (time periods)?

   Combine the model results into groups which represent similar meteorological conditions. Refer to page 7 of Protocol for Reconciling Differences Among Receptor and Dispersion Models (EPA-450/4-87-008).

6. Clarify the PM_{10} SIP Development Guideline section 6.4 "Determining Emission Limits" regarding the use of actual versus allowable emissions.

The emissions used should be the same as those used in the base year and design year in accordance with the guidance in section 7.4 of the supplement to the PM_{10} SIP Development Guideline (SIP guideline). The "Source Category Contributions to Ambient Concentrations" (AC_i) would be representative of actual base year conditions. If the control strategy development is to be based on receptor modeling (i.e., no dispersion model is applicable), then special attention must be given to the use of the following equation contained in section 6.4:

$$\% RI_i - \frac{ISR_i \ (ug/m^3)}{AC_i \ (ug/m^3)}$$

If the emissions change between the base and design years, the AC_i must be adjusted to reflect the design year conditions. This is accomplished by assuming that the change in the ambient concentrations resulting from source category i is proportional to changes in emissions from that category between the base and design years. The equation depicted below may be used to derive the appropriate AC_i for the design year.

$$AC_i \text{ (design year)} = AC_i \text{ (base year)} \times \frac{\text{design year emissions}_i}{\text{base year emissions}_i}$$

The $emissions_i$ must be estimated consistently with Table 9-1 in the Guideline for Air Quality Models (Revised), EPA-450/2-78-027R, and with the discussion in section 7.4 of the supplement to the SIP guideline. If the preceding adjustment is made, the percent RI_i applies to design year $emissions_i$.

DISPERSION MODELING

1. Is EPA working on a model to handle secondary particle formation in a manner suitable for SIP control strategy demonstrations?

   No model recommended for regulatory use at this time handles secondary particle formation in a manner suitable for SIP control strategy demonstration. However, EPA has completed work on two models, PEM-2 (an urban model) and MESOPUFF-II (a medium scale transport model), that can provide a supporting analysis (see page 4-8 of the SIP guideline).

2. Is an exercise to evaluate dispersion model accuracy necessary before utilizing the model for control strategy demonstrations?

   Use of the dispersion models contained in Appendix A of the Guidelines on Air Quality Models (Revised) and listed in Table 4-3 on page 4-9 of the SIP guideline do not require the evaluation of model accuracy before utilization for control strategy demonstration. These models have already been evaluated for a number of situations and have been found to perform well. However, the evaluation of model performance for an individual situation is strongly encouraged where appropriate data bases are available. This evaluation can be used to identify deficiencies in the emission inventory and source characterizations for the area [see Example Modeling to Illustrate SIP Development for the PM_{10} NAAQS].

3. How should PM_{10} fugitive dust sources be modeled?

   PM_{10} fugitive dust sources can be modeled as area, line, or volume sources with the Industrial Source Complex (ISC) model, depending on which is most appropriate for the individual fugitive dust source type. For urban area analysis, fugitive dust sources can be modeled as area sources with either the Gaussian-Plume Multiple Source Air Quality Algorithm (RAM) or Climatological Dispersion Model (CDM 2.0) as well as with the ISC model.

4. Does a modeled violation in a Group II or Group III area trigger the need for a SIP revision?

   Yes, a modeled violation will result in the State being required to revise the SIP to correct the deficiency. For Group II areas, the same timetable triggered by a monitored violation must be followed (i.e., immediately notify the appropriate Regional Office of the violation, within 30 days evaluate the existing SIP, and within 6 months submit a PM_{10} control strategy that has been revised as necessary to maintain the standards). For Group III areas, EPA will call for a SIP revision under section 110(a)(2)(H) of the Clean Air Act (Act).

EMISSION INVENTORIES/EMISSION FACTORS

1. What are the emission inventory requirements for Group II and III areas?

   These requirements are specified in the supplement to the SIP guideline, section 5.

2. Does Mobile 4 calculate PM_{10} emissions?

   No. A separate program is available to calculate PM_{10} emissions. Contact Jon Adler, EPA Office of Mobile Sources, Ann Arbor, Michigan, at (313) 688-4260 or FTS 374-8260.

3. Must an emission inventory be prepared for an entire county?

   Not necessarily, unless the entire county is included in the designated attainment demonstration area. The area to be included is determined based on various considerations discussed in the SIP development guidance. Often, inventories are compiled for entire counties because some of the key data used to estimate emissions, particularly for area and mobile sources, is most readily available on a countywide basis. However, such data can be apportioned to subcounty areas, if so needed.

4. How far out does the emission inventory go?

   See response to question #3 concerning the area to be inventoried. The distance out should be based primarily on the characteristics of the sources in the area. All sources that would cause a significant PM_{10} concentration gradient in the area of concern should be modeled.

5. The EPA does not have emission factors for 40-50 percent of the PM_{10} sources in Wisconsin. What is EPA doing to develop new emission factors for these sources?

   The EPA has been in contact with Wisconsin regarding their "gaps." The estimate of 40-50 percent mentioned at the workshop was based on a preliminary State PM_{10} inventory. The EPA's initial review indicated that some of the identified gaps could be filled and many sources needed to be better defined. Wisconsin plans to refine its inventory, but until it does, the extent of their gaps cannot be ascertained. The EPA has anticipated that Wisconsin and others will encounter gaps and has efforts underway to assist in filling gaps identified by State and local agencies. In addition, EPA is establishing a clearinghouse to handle gap filling requests and proposals from State/local agencies.

6. The EPA needs to provide more information on control efficiencies. Should a State use the control efficiency or equation if no information on PM_{10} emissions is available?

We agree that better information is needed on control efficiencies for PM_{10}. Unless better information is available elsewhere, States may use the table and procedure described in Appendix C-2 of AP-42 to estimate PM_{10} control efficiency for the types of control equipment listed in the table.

7. How does a State handle a range of control efficiencies in AP-42?

AP-42 does not give ranges of control efficiencies for PM_{10}. The table of control efficiencies in Appendix C-2 of AP-42 presents single values of percent efficiency for each of various segments of particle size. How these are used individually or how they are combined is explained with an example in Appendix C-2.

8. The EPA needs to clarify which inventories are based on actual versus allowable emissions for the three groups of areas.

The requirements in Attachment 1 specify which are based on actual versus allowables for the three groups of areas.

9. What is the difference between the base year and attainment year emission inventory?

For Group I areas, the base year is a recent year for which adequate air quality data are available to evaluate a model's applicability to an area. This is an optional step that may be performed before a model is used in the SIP control strategy development. There may be cases where a particular model has already been sufficiently evaluated in other similar areas. In such instances, an evaluation for the area in question may not be necessary. Nevertheless, a base year emission inventory is a useful starting point for the control strategy analysis.

An inventory for the projected year of attainment, before the control strategy is applied, is the basis for the model application to determine the target percent reduction in PM_{10} emissions needed to attain the standard. This inventory should consider any permanent source changes between the base and attainment year, including projected new sources, modifications, shutdowns, new or discontinued controls, growth, and banked emissions. In addition, source emissions should be based on allowables, as specified in Table 9-1 of the EPA modeling guideline document.

For Group II and III areas, inventory data are only applicable to a recent "base" year and should reflect actual emissions. In addition, for Group II areas, an allowables inventory is required for the base year. In Group II and III areas, the base year may change as the data are updated for a more recent year.

10. If the Aerometric Information Retrieval System (AIRS) program limits sources to those greater than 100 tons per year (tpy), does this limit size of the source to be considered in the plan?

Annual reporting of source emissions to EPA are limited to 100 tpy sources, but neither the National Emissions Data System (NEDS) nor AIRS limit entry of point source data for sources of less emissions, if desired for some other purpose (e.g., SIP's). For SIP purposes, EPA is requiring no higher cutpoint than 50 tpy (uncontrolled or uncontrolled potential) for inventorying and submitting data for point sources in Group I areas. Detailed data may be necessary for even smaller sources if they are likely to cause a significant PM_{10} concentration gradient in the area of concern.

11. Is the suggested PM_{10} point source form (revised 9/87) compatible with the Emissions Information System (EIS)?

Not presently. Some software or guidance may be developed to enhance compatability but since EIS is likely to be replaced by AIRS based State systems, the current thinking is to try to build the compatability into AIRS. This feature is not in the initial design plans for AIRS, but is being considered as part of an add-on module.

12. Regarding submittal requirements for Group I areas in 9 months,

a) What year do you use as the baseline inventory:

The latest year for which adequate air quality data are available for model evaluation. The selection should be made with concurrence of the appropriate EPA Regional Office.

b) How do you determine the attainment year ahead of time?

A projection needs to be made based on an estimate of how long EPA will take to approve the SIP and the best information available as to when all the measures in the control strategy can be effected.

c) Why is EPA using the old definition of uncontrollable potential emissions? Is EPA including controls on the source, or are potential emissions totally uncontrollable? (Person asking question referred to a court decision of a few years ago.)

The requirements specify that the cutpoint for inventorying emissions as point sources is for source emissions if totally uncontrolled or the potential emissions of a controlled source if it were to operate uncontrolled. This is only to determine if separate records as a point source are necessary, not to consider in this manner for control purposes. The purpose is to have a separate record for verification if a source's impact does not or does not fully reflect its reported emissions based on an assumed level of control.

d) If you use a 24-hour standard, do you have to submit annual and daily inventory?

Generally, no. In many instances, a State (or designated local agency) may have to run a model for daily and annual periods to assure that both standards will be protected, even if air quality measurements show exceedances for only one of the periods. In such instances, only the annual inventory data needs to be submitted to EPA, although the 24-hour period inventory data should be available for review, if needed. There are some exceptions. Some areas may experience seasonal rises in emissions which largely cause their nonattainment problem. If the problem involves more than one season (e.g., summer wind blown dust and winter wood burning), then only that seasonal inventory should be submitted. In the dual season situations, a model analysis should be done for each season separately, and the results combined for the annual standard analysis. For the daily standard analysis, the model would have to be run for a 24-hour period for each season. For the single season problem, only a 24-hour modeling analysis for the appropriate season is appropriate.

e) In areas with significant secondary aerosol emissions potential, does EPA require inventories for secondary pollutants that may form in the atmosphere?

Generally, only inventories of primarily emitted particulates (or condensible aerosols at ambient temperatures) are required. However, if the control strategy developed to attain the PM_{10} NAAQS includes measures to reduce locally emitted precursors of secondarily formed particles, then the precursor pollutants should be inventoried. This assumes that EPA and the State have agreed upon a dispersion model to use in demonstrating the adequacy of such a control strategy.

13. Regarding Group II areas submittal (within 37 months) requirements:

a) How do you determine allowable emissions?

For the selected base year, use the criteria in Table 9-1 of EPA's modeling duideline document. There may be a need to consult with the appropriate EPA Regional Office in determining which sources in an area should be treated as point sources, other contributing sources, and background sources.

b) What is the object of the allowable emission inventory for Group II areas? (It was suggested that this be reevaluated.)

The object is for the State to evaluate the extent to which allowable emissions may exceed actual emissions. This gap poses a potential for future exceedances should economic or other factors become conducive for sources to emit up to their allowables. If a wide gap exists for any major source in the area (large enough to cause a violation of the NAAQS), the State must either modify source permits or emission limitations to bring these closer in line with actual emissions and, thereby, minimize the potential for future exceedances or submit a demonstration that the NAAQS will be maintained with emissions at allowable levels. This objective is in accord with the stated intent in the Act to "attain and maintain the standards" (emphasis added).

14. Regarding Group III areas:

a) Is annual reporting (referred to in the second slide at the PM_{10} Implementation Workshops) required in addition to NEDS reporting.

No. This is the same as the present NEDS reporting. The NEDS is the current system for handling these data, but in the near future it will be changed to AIRS. Therefore, we referred to this in generic terms (in preceding slides) as annual "national" reporting of emissions.

b) Is the NEDS report due next year, or when?

The NEDS report continues to be due every year. However, through calendar year (CY) 1987 data due in CY 1988, States will still report total particulate emissions data. Beginning with CY 1988 data due in CY 1989, States will be required to report PM_{10} emissions data.

15. Regarding PM_{10} controlled and uncontrolled emissions factors, why is the penetration factor included in the calculation of PM_{10} emissions using an uncontrolled PM_{10} emission factor? Shouldn't it instead be used in the calculation using a controlled emission factor?

No. The penetration factor is used to account for the efficiency of the control device if a source is controlled and an uncontrolled emission factor is used to calculate emissions. If the source is controlled and an appropriate controlled emission factor is used to calculate emissions, the controlled emission factor already takes into account the control efficiency of the source; hence, a penetration factor is not needed in the calculation.

16. New emission factors are needed for:

a) Fugitive dust sources.

The EPA has developed gap filling factors for open sources for several fugitive dust sources which are not covered in AP-42. These are default factors based on technology transfer, engineering judgment, etc. It will cover about 10-15 such sources. The report should be distributed to State/local agencies in February 1988.

b) Fugitive emission sources, especially construction activities.

Open fugitive dust sources are covered in the preceding response. Few PM_{10} factors exist for industrial operations because of a dearth of test information for such sources. The EPA will continue to try to develop stop gap factors for such sources. For construction activities, there is no overall factor for such activities because of their diversity. PM_{10} are presently available for some but not all distinct construction operations. Some of the construction activities for which PM_{10} factors exist are road dust emissions, batch or continuous drop (loading or unloading), and storage (sand or dirt) piles. A clearinghouse has been established by EPA to facilitate the filling of gaps as they occur in inventory development.

AIR QUALITY MONITORING NETWORK DESIGN

1. For monitoring purposes, how large is a neighborhood?

   Neighborhood, in this context, refers to the spatial scale of representativeness in Appendix D of 40 CFR 58. A neighborhood scale defines concentrations within some extended area of the city that has relatively uniform land use with dimensions in the range of 0.5 to 4.0 kilometers.

2. In the Group I areas, one must sample every day at one site. What sampling frequency is required for other samplers in the monitoring area?

   Section 58.13(i) requires everyday PM_{10} sampling for at least one site in Group I areas during the first year of sampling and it must be located in the area of expected maximum concentration. The remaining sites in the Group I area require a minimum of every sixth-day sampling. This does not preclude operating one or more of the remaining sites more frequently than every sixth day.

3. How long must total suspended particulate (TSP) samplers continue to operate?

   Appendix C, section 2.2, 40 CFR 58 specifies that the high-volume sampler may be used as a PM_{10} surrogate State/Local Air Monitoring System (SLAMS) as long as the measured concentrations are below the PM_{10} NAAQS. This applies only to the those samplers which are not a part of the National Air Monitoring System (NAMS) network.

   No TSP samplers may be a part of the official PM_{10} NAMS network. However, Appendix C also specifies that if a PM_{10} NAMS site is designated at a site which was previously a TSP NAMS site, then the TSP and PM_{10} samplers must be concurrently operated for a 1-year period. The purpose of this is to maintain historical continuity for trends purposes. All or part of the 1-year period could have been before the July 1 promulgation or before the official approval of the NAMS PM_{10} network.

   A subset of the NAMS TSP sites are being requested to continue operation to provide filters for the National Particulate Network (NPN). These filters are being analyzed for trace metals and the data are used for long-term trends. Studies are being planned to test the possibility of switching these analyses to the PM_{10} filters. However, until these studies and analyses are complete, the TSP sampler will continue to be used for the NPN.

The officially designated NAMS TSP samplers may be discontinued (except as discussed above) only after the PM_{10} network description has been approved and all the PM_{10} samplers so designated are fully operational at the required frequency. A reduction of some of the TSP samplers from the currently approved NAMS/SLAMS network may be considered on a case-by-case basis before the above conditions are met. Except for the cases noted above and situations where TSP samplers are used to collect particulates for lead analyses and where there is a State standard for TSP, agencies are encouraged to discontinue the use of TSP samplers.

4. How soon are collocated PM_{10} required?

Part of the requirements in an approved PM_{10} network is for all the PM_{10} samplers to meet the quality assurance (QA) procedures as set forth in Appendix A. The collocation of PM_{10} samplers is a part of the QA plan as specified in Appendix A, section 3. Therefore, the collocated PM_{10} samplers must be designated and operating before the NAMS PM_{10} network can be approved.

5. Must TSP monitoring be continued for lead?

Yes. At the current time, the reference methods for lead as specified in the regulations call for the collection of ambient lead by the high-volume sampler collection method. Until such time EPA changes the lead standard and/or reference method, the continued use of the high-volume sampler for monitoring ambient lead levels is required.

6. When does NAMS, SLAMS PM_{10} monitoring start?

The regulations require the NAMS and SLAMS network description to be submitted within 6 months after the effective date of the regulation. The NAMS network, and the SLAMS network in Group I and II areas, must be operational within 1 year after the effective date of the regulation. The remaining SLAMS network (i.e., Group III areas) must be operational within 2 years after the effective date of the regulation. There is nothing, however, to preclude an agency from submitting their network descriptions early and, upon approval, implementing their NAMS and/or SLAMS networks early.

7. If a State has PM_{10} dichotomous and PM_{10} size-selective samplers, considering the potential for higher values from the size-selective, which data set should the State use?

All data must be used at face value after promulgation for attainment/nonattainment purposes, design value development and monitoring frequency determination.

8. How does one incorporate PM_{10} into the Pollutant Standard Index (PSI) and what are the breakpoints?

One incorporates PM_{10} into the PSI by discontinuing TSP monitoring and substituting PM_{10} monitors and following the procedure described in the Part 58 Appendix G regulation, which identifies the PSI breakpoints, and in the guideline entitled Guidance for PM_{10} Episode Monitoring, Methods, EPA-450/4-83-005, February 1983.

9. Are mass flow controllers affected by atmospheric changes?

Yes, they are. Although the mass flow remains constant, the actual volumetric flow rate through the inlet fluctuates as the ambient temperature and barometric pressure change at the sampling site. Normally, the range of the fluctuations is within the tolerance limits of the inlet. However, the flow rate set point of the mass flow controller must be correctly adjusted so that the deviations are centered with respect to the seasonal average temperature and barometric pressure at the site. Detailed procedures for calculating the set point and adjusting a mass flow controller are contained in Volume II of EPA's Quality Assurance Handbook for Air Pollution Measurement System, section 2.11, EPA report 600/4-77-027a.

EXCEPTIONAL EVENTS GUIDANCE

1. What is the purpose of flagging described in the Exceptional Events Guideline?

The basic purpose of the flagging system is to identify those air quality measurements that are influenced by exceptional events. These are events which, if unidentified, could lead to possible misinterpretation or misuse of the data. Because the flagging system relies heavily on the identification and understanding of events that may have influenced a particular air quality measurement, its major thrust is information exchange. The criteria for identification of "exceptional events" are designed to be expansive enough to encompass most good faith claims by State and local agencies of when data should be considered for special treatment. It is not intended to reflect EPA's views on the validity of these claims. The flagging of data is merely a way for a State or local agency to state that it regards the data as influenced by exceptional events, and may later claim that the data should be discounted for certain purposes.

2. Who flags data?

Under the flagging system, State and local air pollution control agencies will be responsible for initially identifying and documenting data influenced by exceptional events. These agencies also must develop the appropriate background information used to support the decision to flag an individual piece of data; they must submit the information to EPA for concurrence and make it available for the public's review upon request.

3. Does flagging imply use or nonuse of data?

The guideline's general policy is to allow consideration of excluding flagged data from use in regulatory actions. The actual exclusion of the use of flagged data would only be allowed if, as a result of a public review process, the responsible government agency, e.g., the State air agency during the State regulatory process, and the U.S. EPA during the Federal review/approval process, determines that the data are inappropriate for use in a specific regulatory activity. This consideration for exclusion of flagged data carries with it no prior presumption towards use or nonuse of flagged data. The exclusion of flagged air quality data for SIP regulatory activities (areawide or local control strategy development, SIP design values, attainment /nonattainment status, enforcement actions, etc.) shall be considered on a case-by-case basis and discussed during the public review process. Exclusion of the flagged data would only be allowed if the responsible control agency determines in conjunction with a public review that the flagged data are inappropriate for use.

4. Is there consistency in the definition of exceptional events nationally?

This guideline provides general definitions for these events and general criteria for their use in flagging air quality data. The application of a definition may vary from area to area because of differing air quality and control situations. For example, salting and sanding of streets for snow and ice control may be an exceptional event in the southern sections of the country, whereas they may be routine, controllable events in the northern sections. Therefore, definitions in the Exceptional Events Guideline are only a national guide and are not meant to replace reasonable judgment on the part of the Regional, State, and local air pollution control agency officials in defining and identifying exceptional events for the purpose of flagging data.

5. How is exceptional defined for exceptional events?

Webster defines "exceptional" as forming an exception, rare, uncommon, extraordinary, deviating from the norm. With respect to air quality considerations in this guideline, an exceptional event is defined as an event that is not expected to recur routinely at a given location, or that is possibly uncontrollable or unrealistic to control through the SIP process. As noted previously, what is exceptional in one area of the country may not be exceptional in another. Therefore, some judgment is needed in identifying whether an event is exceptional in the area of the country where it has occurred.

6. How frequently does an event have to occur before it is considered not an exceptional event?

During the 4-year development of the guidance, which was reviewed three times by State and local agencies and numerous times by Regional Offices, no concensus was arrived at concerning frequency of occurence or how rare should be defined. Therefore, no absolute definition or numerical quantity has been assigned to rare or unusal. An attempt has been made to leave some room for interpretation because, what may be unusual or exceptional for one part of the country may be typical for another and this variability requires flexibility in national definitions and criteria.

7. If data are flagged as an exceptional event and the level is greater than the 24-hour NAAQS (150 ug/m^3), is the flagged value counted as an exceedance?

Yes. A 24-hour value greater than the level of the 24-hour NAAQS, after rounding to the nearest 10 ug/m^3, is defined as an exceedance of the 24-hour standard. All data, flagged or unflagged, should be available to the public for comparison to the NAAQS to determine if 24-hour exceedances and, in turn, if violations of the 24-hour or

annual NAAQS have occurred. However, in section 2.4 of Appendix K, EPA has authorized special treatment of air quality data affected by uncontrollable events caused by natural sources or unusual events that are not expected to recur at a given location. These events may be discounted or weighted according to the likelihood of their recurrence, subject to the approval of the Regional Administrator in accordance with EPA guidelines.

Moreover, the use or nonuse of flagged exceedances for SIP purposes will be determined on a case-by-case basis. For example, a flagged exceedance caused by a volcanic eruption would not require modification to an approved SIP.

8. Will flagged data be used to determine monitoring frequency requirements as specified in 58.13?

Yes. However, if the exceptional event has received regional concurrence prior to the time in which revisions to existing sampling frequency would be required to have occurred, a request for relief from accelerated sampling schedule can be submitted to the Regional Administrator for SLAMS or the Administrator for NAMS sites.

9. Under what circumstances will prescribed burning not be considered as an exceptional event?

In those areas of the country where prescribed burning is used regularly and extensively for agricultural and/or forestry land management, prescribed burning may not be considered an exceptional event for the purposes of flagging air quality data. Prescribed burning in these areas is usually subject to rules and regulations, including smoke management plans, under which a regulatory agency permits burning after deciding where, and to what extent, the smoke will be allowed to impact air quality.

10. Why do we call "agricultural tilling" an exceptional event?

This event was included along with highway construction, salting, and sanding of streets and others, which are not exceptional; however, they may be difficult or impractical to control through the SIP process. There are some conditions attached to the agricultural tilling; such as, it must occur within a reasonable distance (500 meters) of the monitor and the data in question must have been collected during or immediately after the day of tilling.

11. What type of documentation is required for an exceptional event?

The type and extent of documentation for an exceptional event will vary depending on type and nature of the event on a case-by-case basis. A discussion of documentation is provided in section 4.4 of

the Exceptional Events Guideline. It could be as simple as a newspaper article concerning a severe windstorm or as complex as a chemical or microscopic filter analysis.

12. After EPA has completed the grouping process, can data be flagged?

The Exceptional Events Guideline was developed independently from the PM_{10} SIP grouping process and it concerns all criteria pollutants. If data are entered into AIRS, they can be flagged at entry. If the AIRS system is not used, flagged data should be submitted along with the SLAMS annual report or its cover letter.

13. Is there a procedure for public comment on exceptional event data?

It was not the intention of the Exceptional Events Guideline to create or prescribe a procedure for public comment. Public review only becomes necessary when a decision is made to use or not to use data for particular regulatory purposes. All of these regulatory purposes require some form of public input. It is the intention of the guideline to utilize those public review processes already in place.

14. When is the last date data may be flagged and documentation submitted?

Requests for flagging data including the documentations should be submitted prior to, or together with, the submission of the SLAMS annual report covering the timeframe for which the data was generated.

15. Can only ambient PM_{10} values greater than the NAAQS be flagged?

The exceptional events policy applies to any concentration, regardless of magnitude, affected by the infrequent activities included in the policy. Otherwise, the annual arithmetic mean concentration for an area may be overestimated due to a few high 24-hour concentrations (but not exceeding the NAAQS) caused by exceptional events.

1. With the statistical form of the standard, when does the 3-year timeframe start for evaluating compliance with the standard?

The 3-year timeframe for evaluating attainment (compliance) started on or before promulgation with the initial deployment of PM_{10} samplers. According to Appendix K to Part 50, the 3 years must be calendar years, although 3 running years may be used for the initial period of PM_{10} data collection to allow for midyear startup.

Data collected both before and after the July 1, 1987 promulgation can be used to satisfy the 3-year data requirement. However, in order for data to be considered "valid," the data must be consistent with the short-term and long-term sampling requirements described in Part 58.13 as well as the data capture requirements of Appendix K.

Once the short-term requirements are satisfied, 2 additional years of data satisfying the long-term sampling requirement would then be needed.

The data used to satisfy the short- and long-term sampling requirements can be data collected prior to the July 1, 1987 promulgation.

2. How is the gray zone data interpreted now that the regulations are promulgated?

Prior to promulgation, PM_{10} data were used in combination with TSP data to place areas into one of three groups for SIP development purposes. PM_{10} data from the Sierra Anderson 321A instruments that were within 20 percent of the standard (0 to +20 percent) were not used to place an area in Group I. Other data or SIP conditions would be required for that classification. The EPA has determined that a potential bias in PM_{10} measurements exists in some situations. This was demonstrated in Phoenix where the particulate matter contained a large percentage of coarse particles. Since there was limited time to evaluate the potential for coarse particle influence on existing PM_{10} monitoring programs, the concept of the gray zone was developed where areas were placed in Group II, so that more time would be provided to determine the correct status with respect to the standards.

A series of meetings are ongoing among EPA staff to resolve issues related to instrument modification and the recording of observations in the "gray zone" since the promulgation of the NAAQS for PM_{10}. A policy statement is expected by mid-1988.

3. If an area has a lot of exceedances, does EPA care what procedures are used to characterize these exceedances? What procedures are available to the States?

The estimated number of 24-hour exceedances is needed for several applications. The foremost application is the determination of attainment or nonattainment with the 24-hour standard. For this application, the estimate of the expected number of exceedances is derived according to the formulas specified in Appendix K to Part 50. If this estimate is less than or equal to 1.0, the site passes the attainment test for the 24-hour standard. If this estimate exceeds 1.0, then the site fails the attainment test. When the observed number of exceedances in the last 3 years is greater than or equal to 4, however, the computation for the estimated number of exceedances is not necessary--the 24-hour standard is automatically violated.

If the observed number of exceedances is greater than 3 (or the site is otherwise determined to be in nonattainment with the 24-hour standards), procedures other than those specified in Appendix K may be used to estimate the number of exceedances per year. This may be of interest, for example, in the evaluation of dispersion models and design value estimation. For these applications, the use of a statistical distribution fitted to observed PM_{10} concentrations may be considered.

4. How much data capture per site is required before a site can be used in an attainment demonstration?

Three years of PM_{10} data are needed which are sampled in accordance with Part 58.13 monitoring frequency requirements and produces 75 percent data capture in each calendar quarter.

5. Can you use more than 3 years of data?

Yes, more than 3 years of data may be used. This is permitted by the regulation provided that the additional years of data are representative of current conditions and that all additional years are used. This is stated in Appendix K to Part 50.

6. What would happen if one of the attainment evaluation years does not have 75 percent data capture?

The test for attainment requires 3 calendar years of data. If one of the most recent 3 years of monitoring data does not satisfy the minimum 75 percent data capture for at least one calendar quarter, then this year cannot be used to test for attainment with the standards. If an attainment demonstration is desired, then (a) make use of the guideline on exceptions to minimum data completeness to "fix" the

incomplete year, or (b) use additional prior calendar years of PM_{10} data to come up with the required 3 complete calendar years. Appendix K permits the use of more than 3 years provided that they are representative and that all such years of data are utilized.

If one of the last 3 years which does not satisfy the 75 percent data capture requirement has exceedances of the 24-hour standard, however, these exceedances cannot be ignored in the estimate of the expected number of exceedances. At an absolute minimum, the observed number of exceedances for the calendar quarter would be considered in the computation of the estimate of the expected number of exceedances. Adjustment for incomplete sampling could still be considered, but must be considered cautiously in this situation, because the annual number of estimated exceedances could be overestimated with insufficient data. Adjustment for incomplete sampling must be permitted even without 75 percent data capture so that there is no incentive to terminate sampling in a quarter with an observed exceedance to avoid a large number of estimated exceedances.

Similarly, the average for a calendar quarter which does not satisfy the 75 percent data capture requirement could also be considered in the computation of the 3-year annual arithmetic mean. In this way, a quarter with high PM_{10} concentrations and less than 75 percent data capture is not necessarily ignored. The use of averages based on incomplete data must also be used very cautiously because of the potential for biased estimates. Appendix K indicates that one-half the minimum detectable concentration (one-half ug/m^3) can be substituted for the missing values in order to judge nonattainment. Other "reasonable" approaches could also be considered. For example, if the temporal distribution of available observations within the quarter is balanced and at least 12 observations are available, then a quarterly mean can be computed from the available data for attainment or nonattainment purposes. The observations can be considered temporally balanced if no less than 20 percent of the total number of quarterly observations are in any single month.

7. Can data from incomplete years be ignored in the attainment determination?

Data from incomplete years can only be ignored if the PM_{10} concentrations from those incomplete quarters or years indicate attainment. Those incomplete periods cannot be ignored if they indicate potential nonattainment.

8. How will a variable monitoring frequency affect the attainment determination?

The variable monitoring frequency can affect the minimum data completeness requirements specified in Appendix K. Those requirements indicate that the site must produce 75 percent data capture and must be

sampled according to the frequency specified in Part 58.13 of the monitoring regulations. This may be once in 6 days, every other day or every day. If the site is sampling at a frequency less than that required by Part 58.13, then the site does not satisfy the minimum data completeness requirements and cannot be used to measure attainment with the standards.

If a site does sample at the correct frequency and produces the required 75 percent data capture, the missing data periods among the scheduled samples may not be intentional. It would not be acceptable, for example, to only sample on weekdays in order to capture 75 percent of the possible samples.

9. In adjusting for trends in particulate matter emission and air quality data, would we differentiate between: (2, 2, 0), (2, 2, 2), (0, 1, 2) exceedances per year over the last 3 years?

The adjustment for trends is only permitted if the most current year indicates attainment with the standards. Therefore, only the first example cited (2, 2, 0), would qualify for consideration for trends adjustment. In addition, the justification for trends adjustment is not merely the appearance of a trend in observed air quality during the last 3 years. Rather, it is based on a documented trend in the underlying emissions during this period.

The adjustment for trends is not intended for situations in which emissions have increased and the average of the last 3 years of monitoring data do not indicate nonattainment. Thus, the case (0, 1, 2) with a corresponding increase of emissions during this period could not be adjusted for the emission trend to indicate nonattainment.

10. Can data be combined among sampling sites?

In general, you cannot mix data from more than one monitoring site for attainment/nonattainment demonstration or estimation of design values, regardless of the similarity of the sources that are affecting the sites. However, there may be special situations where this may be justified and data can be combined among consecutive time periods (e.g., because of a minor movement of an instrument). Such instances would have to be clearly documented to justify this special treatment of these data.

In a situation in which a number of districts are suffering from similar emission problems, the data from monitors in these districts cannot generally be combined. However, a single monitoring area can be defined which includes all such districts. In this way, one site can be designated as the worst site in the multidistrict area and only this site would be required to monitor at a frequency greater than once every 6 days.

11. If you exceed the 24-hour and annual standards, which one is controlling?

By definition, the "controlling" standard is the standard which requires more emission control in order to be attained. Furthermore, when this standard is attained, then the other standard will also be attained. In the simplest case, where emission reductions are directly proportional to air quality improvement and the background is assumed to be zero (or negligible), the standard with the highest ratio of its design value to the level of the corresponding standard is the controlling standard. This is the case that is assumed in Part 58.13 where the 24-hour standard is said to be controlling if it has the largest ratio.

Normally, the annual and 24-hour design values would be reevaluated from current air quality data for each site in the monitoring area during the annual network review and used to define sampling requirements. However, dispersion modeling may be used to reassess PM_{10} design values and corresponding sampling requirements.

If it is determined by modeling that emission reductions are not directly proportional to air quality improvement, then modeling derived estimates could indicate a different controlling standard. For example, the annual standard may be the "controlling" standard even though the 24-hour standard at monitoring locations has the larger ratio of its design value to the standard level.

If the modeling results regarding a controlling annual standard and the corresponding control strategy are deemed valid for the current year during the annual network review, then 1 in 6-day sampling may be utilized at the designated worst site; selective sampling requirements for 24-hour controlling standards based on observed monitoring data may be waived. Nevertheless, the occurrence of high 24-hour design values estimated from monitoring data should be considered in the SIP tracking and the reassessment of the existing control strategy to make sure that the SIP strategy is still valid and that underlying conditions have not shifted towards a controlling 24-hour standard.

12. How do you use a 24-hour design value that was extrapolated from observed data?

A 24-hour design value is extrapolated from observed data when less than 1 complete year of data are available (i.e., 365 observations). The extrapolated design value must be used to determine whether the 24-hour or the annual standard is controlling, for the purposes of defining monitoring requirements. The extrapolated design value is also used in the development of the control strategy.

If a dispersion model is used in the control strategy development, the model derived design value is the preferred design value. In this case, the extrapolated 24-hour design value from ambient data would be used in the model evaluation. The model should be compared to statistically extrapolated values as well as observed data if the number of 24-hour observations represent less than 1 complete year of data.

Receptor models make use of the chemical composition of actual PM_{10} samples. If a receptor model is used, then obviously, the receptor model cannot make comparisons to a hypothetical sampling day which was not observed. The receptor model would focus on the highest day(s) to determine the emission contributions to the peak PM_{10} values. The extrapolated design value in this case would be used to determine the extent of emission reduction that may be needed for these sources. The extrapolated design value indicates the PM_{10} concentration that might have been observed if sampling was performed every day. An assumption is made that the same sources would contribute to the PM_{10} concentration predicted by the statistical extrapolation.

If dispersion or receptor models are not applicable, then the design value derived from ambient air quality data must be used to define emission reductions. If the data are incomplete (i.e., < 365 observations), then a design value based on observed data must be viewed as tentative and subject to revision. The extrapolated design value can be used to estimate emission reductions that may be needed.

13. Do you have to extrapolate to get your design value when you have less than everyday sampling?

The SIP guideline describes several methods for estimating design values. One of these is table look-up which does not involve extrapolation. Since the regulation does not specify the design value estimation procedure and only provides references for consideration, extrapolation is not required. However, the SIP guideline does state that for the purposes of determining the controlling standard (annual or 24-hour), extrapolation must be considered.

14. Why did you use the upper 10 percent of data to estimate the 24-hour design value?

Procedures described in the SIP guideline for estimating the 24-hour design value only depend on the highest values in an air quality data set. The table look-up procedure may only utilize the highest value observed in the last 3 years. The procedures that involve the use of statistical distributions or graphical estimation only utilize the upper tail of the data. The highest values could be caused by a different set of source receptor relationships and meteorological conditions. Common practice is to consider the top 5-10 percent of the data.

MONITORING SCHEDULES AND TREATMENT OF EXCEEDANCES

1. How do you handle a change of sampling schedule in the middle of a quarter?

   If the sampling schedule changes in the middle of a calendar quarter, the calculations for the quarterly mean and the estimated number of exceedances are performed on the basis of the total number of observations recorded for the quarter, regardless of the sampling schedule(s) involved. In Appendix K to Part 50, the calculation of the annual mean and the adjustment for incompleteness of sampling do not consider the month in which the samples were recorded.

   The change in sampling schedule may be important, however, for determining if the site is sampling at the correct sampling frequency in accordance with Part 58.13. The monitoring requirements are always described in terms of calendar quarters. Therefore, the minimum frequency reported for the quarter is the frequency with which the monitoring requirements are compared.

2. What site should be selected to sample on an accelerated schedule within a monitoring area?

   The regulations specify that for some areas at least one site must monitor every day or every other day and that this site must be located in the "area of expected maximum concentration." A variety of considerations for site selection are discussed in Part 58.13 of the new monitoring regulations including: the magnitude of the high value observed in the most current year, changes in PM_{10} emission sources and the use of the last 3 years of data for network stability. Ideally, when the selected site is in attainment with the PM standards, the entire monitoring area will also be in attainment. The selected site will be called the "designated worst site."

3. If a site is in the long-term monitoring plan, when does it adjust its sampling frequency?

   At the time of the annual network review, the annual and 24-hour design values are recomputed. One site is designated the worst site and its sampling frequency is determined in accordance with the selective sampling requirements. The new sampling frequency must be initiated on or before the beginning of the next calendar year. It is advantageous, however, to track air quality data on a real-time basis and not wait for the midyear network review. This can keep sampling schedules more consistent with current air quality status.

Air quality data, reported to EPA, is summarized by calendar quarter and calendar year. The sampling frequency used to produce the data must also be reported, as well as the dates of any changes in sampling frequency. The minimum reported frequency will define the frequency for the quarter. This value will be used to judge if minimum sampling frequency requirements have been satisfied. Since Part 58 requirements are stated in terms of calendar quarters, and Appendix formulas are computed in terms of calendar quarters, it is desirable to start new schedules at the beginning of a calendar quarter.

4. When is the short-term sampling period completed?

The short-term sampling requirements of Part 58 define the first year of monitoring for the site designated as the worst site in the monitoring area. In Group I and Group II areas, the sampling frequency at the designated worst monitor for the first year of monitoring shall be every day and every other day, respectively. In addition, everyday sampling for 4 consecutive calendar quarters is required in Group II and Group III areas that observe a single exceedance of the 24-hour standard. Acceleration to everyday sampling following an observed first exceedance is part of the short-term plan.

A definition of an equivalent year is also provided, whereby 2 or 3 years of data produced at lower sampling frequencies could satisfy the first year requirement. If more than 1 year of data are used to satisfy the short-term sampling requirement, these data shall only count as 1 year towards the required 3 years of "valid" data.

When the designated worst site satisfies the short-term requirements, the entire monitoring area satisfies the short-term, "first year" requirement.

5. How are data collected prior to promulgation judged to be consistent with the short-term and long-term sampling requirements?

If more than 1 year of PM_{10} data were collected prior to promulgation, then some of these data could be used to satisfy the short-term, "first year" requirement and the remaining data could be used to satisfy 1 or more years of long-term monitoring. The short-term requirements depend on the area grouping and the occurrence of any exceedances of the 24-hour standard for Group II and Group III areas.

Once the short-term requirement is satisfied, the long-term sampling requirement depends on the controlling standard and the relative level to the 24-hour standard if it is controlling. If the annual standard is judged to be controlling in a Group II or Group III area, then 1 or more prior years of data collected every sixth day would be sufficient to satisfy the long-term sampling requirements. However, if it is determined that the 24-hour standard is controlling,

then the adequacy of the frequency of the prior sampling depends on the relative level to the 24-hour standard. This only applies to the designated worst site in the monitoring area. In principle, this determination should be made for the year in which the data were collected, but due to practical constraints, this determination can be made on the basis of the current assessment of PM_{10} air quality status. If, for example it is determined that the 24-hour standard is controlling and the designated worst site is 30 percent above the level of this standard, i.e., design value equals 195 ug/m3, then every other day sampling would be required according to Part 58.13.

6. Short-term monitoring plan: Is more than one monitoring site required to increase its sampling to everyday for 1 year if an exceedance is observed at multiple sites during the same calendar quarter?

   Only one site is required to increase its sampling to everyday following the first observed exceedance. If several sites observe a single exceedance in the same calendar quarter, one site is designated the worst site and this site would be expected to increase to everyday sampling within 90 days following the end of this calendar quarter. The selection of the worst site will be based on observed concentrations as well as other considerations regarding knowledge about emissions and meteorology.

7. Short-term monitoring plan: How is the first exceedance treated at a site, if another site in the monitoring area is already sampling everyday (or planning to) in accordance to Part 58.13?

   By policy, EPA shall exempt the first observed exceedance at all sites in a monitoring area from adjustment for incomplete sampling in the exceedance calculations, if one site, the designated worst site, goes to everyday sampling for 1 year. The monitoring agency may choose to increase the sampling at additional sites if it feels that these sites are potential nonattainment sites, reflecting different emission sources or source receptor relationships.

8. Short-term monitoring plan: How is the second observed exceedance treated in a monitoring area, prior to the initiation of everyday sampling at the designated worst site?

   When a second exceedance occurs at the designated worst site or if a second exceedance occurs at any other site prior to the initiation of everyday sampling in the monitoring area, then this exceedance (and subsequent exceedances) would be adjusted for incompleteness of sampling.

Exceedances are adjusted for incompleteness of sampling on a quarterly basis, using the total number of samples in the quarter. The second exceedance is estimated using the total number of observations (minus one observed sample for the first observed exceedance).

9. Short-term monitoring plan: During the period of everyday sampling following the first observed exceedance, how are exceedances interpreted which are observed at sites sampling less than everyday?

When the designated worst site is sampling everyday, other sites sampling less frequently may measure exceedances of the 24-hour standard. Except for the first observed exceedance, all exceedances at all sites are adjusted for incompleteness of sampling. If a site which is sampling less than everyday observes an exceedance, then the exceedance will be adjusted for incompleteness of sampling. However, if the designated worst site observes a higher value on the same day, then designated worst site will continue to be used to assess attainment/nonattainment, regardless of the estimated number of exceedances at the other sites. If the designated worst site records a lower value on the same exceedance day, then the site recording a higher value must go to everyday sampling to avoid adjustment for incomplete sampling. The designated worst site would be expected to continue its current sampling schedule until the time of the next annual network review. At this point, one or more of these sites could be identified for accelerated sampling.

10. Long-term monitoring plan: How are exceedances interpreted at sites which are sampling less than the designated worst site?

As described above, the designated worst site will be used to assess attainment/nonattainment if it observes higher concentrations on days with exceedances at other sites.

11. Long-term monitoring plan: How is the first exceedance interpreted?

If the first exceedance occurs in the long-term plan (even if another site in the monitoring area previously observed an exceedance and increased its sampling to everyday) then an increase to everyday sampling must be initiated. This is not necessary if the designated worst site previously recorded an exceedance and currently records a higher concentration on the same sampling day. If multiple sites record an exceedance on this day, then only one site is required to accelerate its sampling. The acceleration to everyday sampling will avoid the adjustment for incompleteness of sampling in the exceedance calculations for this first exceedance and help to determine if this site should be the new designated worst site. Since the monitoring is in the long-term phase, however, the evaluation of revised sampling frequencies would take place during the annual network review and the change in sampling frequency can commence at the beginning of the following calendar year.

Everyday sampling must be followed for 1 year, even if it is determined that the selective sampling requirements do not require it on the basis of the estimated design value.

12. If an area designated Group II or Group III observed its first exceedance and wants that exceedance to count as one in future exceedance calculations, does it have to initiate everyday sampling in its first year of monitoring?

If the exceedance occurred after promulgation, the area must satisfy the Part 58.13 requirements for 4 calendar quarters of everyday sampling following the first observed exceedance, in order to permit the first exceedance to count as one in the exceedance calculations. If the first exceedance at the site occurred prior to the promulgation date, however, the site will be exempt from the additional everyday sampling requirement. This is consistent with the policy used for the area grouping process, where the first observed exceedance was not adjusted for incompleteness of sampling at all sites.

If an area observes its first exceedance after the promulgation and does not initiate the required everyday sampling, the exceedance shall be adjusted for incompleteness of sampling. On this basis, the site could fail the attainment test for the 24-hour standard. If this site is in a Group III area, then EPA could call for a SIP revision.

13. Is there a problem with having more than one monitor in a given source area?

In single (or multiple) source situations, multiple high concentration areas are likely. The number of monitors needed to cover all such areas, and to provide sufficient spatial resolution within each area, will depend on professional judgment and the available resources. It should be recognized that difference in sample frequency (and subsequent adjustment for incomplete sampling) may complete the attainment/nonattainment status. Thus, in a case where more than one site is placed in areas of expected maximum concentration, either all sites should be sampling at the accelerated schedule, or only one site should be part of the SLAMS with the others designated special purpose monitors. If it is determined that each such site is affected by different emissions or meteorology, then it may be appropriate to designate each site as the maximum concentration site in its own monitoring area.

MONITORING DEADLINES

1. How do the monitoring deadlines relate to the attainment dates for Group II areas?

Technically, the SLAMS networks do not have to be in place and operational until August 1, 1988. Therefore these areas are not required to have any PM_{10} data prior to this point. On this basis, 3 years of PM_{10} data might not be available until July 31, 1991. According to the SIP guideline, however, Group II areas are required to determine if they are attainment or nonattainment by September 1, 1990 (37 months from the effective date of the regulation). Thus, if a Group II area wants to be considered to be in attainment with the standards, it must have its worst monitoring site to be producing data by August 1, 1987. This provides 3 years for data collection and 1 month for analysis. If monitoring was not initiated by August 1, then 3 years of data will not be available by the required date. In order for attainment to be demonstrated in this situation, a Regional Administrator waiver for not satisfying the minimum data completeness requirements must be granted (in accordance with the EPA Guideline on Exceptions to Data Requirements for Determining Attainment of the Particulate Matter Standards, April 1987) or dispersion modeling must be performed. Otherwise, the area cannot be considered to be in attainment with the standards.

Since nonattainment can be determined in less than 3 years, this determination can be made at any time. PM_{10} data collected prior to promulgation shall be used to judge nonattainment with the standards.

DEVELOPMENT PLANS/SIP PROCESSING

1. What is EPA's timeframe for SIP processing?

   The EPA's policy is to publish a notice of proposed rulemaking within 7 months after a complete SIP or SIP revision is submitted. A notice of final rulemaking would be published within 7 more months.

2. What is the outside attainment date?

   Three years from SIP approval, unless a 2-year extension is justified. We know that some areas may not be able to attain in that timeframe. See question 7 on page 42.

3. How does a State set a compliance date when EPA approval date is indeterminant?

   Source compliance dates must be within 3 years of SIP approval. The SIP could be approved within 14 months of its submission to EPA. The time between State adoption of the SIP and EPA approval may be reduced by parallel processing during the period of public review and comment.

4. Can States expect feedback from EPA when they complete the milestones in their development plans (i.e., emission inventory draft control strategies, etc.)?

   The States are encouraged to work closely with their EPA Regional Offices and submit drafts of emission inventories, emission factors, model protocol, regulations for review. The EPA will give as much feedback as time permits; the State is not to stop progress while waiting for comments, however.

5. Do all SIP actions require a public hearing?

   Yes, since each State must revise their SIP for Group III areas and since the Group II commitments will be incorporated into the SIP, all such revisions and additions should be included in a public hearing.

6. (a) Why is August 1990 the deadline for PM_{10} determinations of attainment status?

   The EPA is allowing up to 37 months to determine attainment status.

   (b) Does a State have to wait 37 months before it declares an area to be nonattainment if a violation of the PM_{10} standard is observed?

   No, see the SIP guideline, section 7.3.2.(3).

7. What is the attainment date for Group II areas which observe violations?

   Three years from approval of the committal SIP.

8. What demonstration of need is necessary for a 2-year extension of the attainment deadline?

   See SIP guideline supplement, section 7.3.6.

9. Is it possible to request a 2-year extension after you submit the initial SIP (including committal SIP's) to EPA?

   No, see SIP guideline supplement, section 7.3.6.

10. Whose resources will be used to analyze the ambient air sampling filters?

    The State's resources which are supplemented by EPA grant funds.

ATTAINMENT DEMONSTRATION

1. Why must an area demonstrate attainment based upon allowable emissions?

   A SIP is to protect the NAAQS at all times. Therefore, it is necessary to demonstrate that the SIP will protect the NAAQS when sources are emitting PM_{10} at the maximum rates allowed. See SIP guideline, section 7.4.1.

2. What type of demonstration is required for a Group II or III area?

   See SIP guideline, section 7.3.2. No demonstration is required for Group III areas.

3. If a facility emits more than 50 tpy, must it be considered in the plan?

   See SIP guideline supplement, section 5.

4. Are sulfates fair game for controls?

   Yes, if a State needs to reduce the precursors of sulfate formation in the atmosphere, they have that prerogative. The State must work with EPA to develop a procedure for projecting the ambient effect of this control strategy.

5. How many years are required in extending projections?

   The SIP's should take into account the effect on PM_{10} emissions of future growth for 10 to 20 years into the future [see 40 CFR 51.110(h) and (k)(4)].

6. Will EPA consider a several year control strategy for secondary aerosol problems?

   If an area cannot attain the PM_{10} standards because of secondary particle formation, the area may be able to justify an extension under section 110(e). In addition, EPA is evaluating a policy on long-term nonattainment.

7. Maximum allowable emission modeling will never show attainment and does not reflect reality and it may be impossible to adopt control measures. Actual emissions are significantly less than maximum allowable emissions. (Example: natural gas versus oil in power plants.)

   If boilers actually emit 0.001 lb PM_{10}/mmBtu but are allowed to emit 0.3 lb PM_{10}/mmBtu by permit, the SIP must be designed to protect the NAAQS when boilers are emitting 0.3 lb/mmBtu. If boilers do not need to emit 0.3 lb/mmBtu allowable in the future, then the limit should be lowered. See SIP guideline supplement 7.4.1.

8. Comment: In some States, there are a large number of sources with old permits. It is not reasonable to use allowable limits.

   See section 7.4.1. A screening model should be used to identify significant point sources for which allowable emission limits must be used. Areas sources do not really have allowable emission limits that are above the controlled level.

9. Are seasonal controls legal, e.g., burn natural gas in winter and coal in summer?

   Generally, control measures must be applied year-round (especially those applicable to combustion sources) to continually meet the applicable emission limit. However, it may be necessary for a State to develop separate control strategies to solve different seasonal PM_{10} problems. In such cases, the seasonal control strategies must have seasonally enforceable emission limits and separate demonstrations of attainment of the 24-hour NAAQS. The abilities of the seasonal control strategies to attain the annual PM_{10} NAAQS must also be demonstrated using the highest seasonal allowable emission rates or an average annual rate (see SIP guideline supplement, section 7.4.1).

10. What are the general SIP requirements for Group III areas?

    See SIP guideline, section 7.3 and supplement, section 7.4.3.

11. How does one define the boundary of a Group I or II area?

    See SIP guideline, section 2.5.

TRANSITION POLICY

1. When can redesignation of TSP nonattainment area request be submitted?

   States can request area redesignation from TSP nonattainment to attainment if the area has sufficient data to make the demonstration under EPA's previous policy. Otherwise, a State can request redesignation to unclassifiable when it submits its PM_{10} SIP for the area (see 52 FR 24682).

2. Will EPA permit a State to relax its emissions from reasonably available control technology (RACT) to actual emission levels?

   Yes, consistent with SIP guideline supplement, section 7.5.

3. What is to be done about States with TSP SIP's which are disapproved under section 110?

   The State should focus on developing approvable PM_{10} SIP's. However, it is likely that the elements of the TSP SIP that were disapproved will be needed for the PM_{10} SIP.

4. To what extent should enforcement actions during the transition period be focused on for control of PM_{10}?

   See SIP guideline supplement, section 7.5.

5. What happens to SIP's in process?

   See SIP guideline supplement, section 7.5.

PM_{10} STACK TEST

1. Does EPA plan to promulgate an emission test method for PM_{10}? What is EPA's plan for test methods for condensibles and secondary particulate?

   An advance notice of proposed rulemaking for the reference method was published April 8, 1988 (see 53 FR 11683).

3. The EPA uses a modified Method 5 to test wood stoves. It collects the back half of the train (condensibles). Why can't this be used for PM_{10} condensibles?

   The modified Method 5 is designed to measure volatile materials generated from combustion of wood. It does not necessarily represent PM at atmospheric conditions.

4. How can the exhaust gas recirculation (EGR) probe be placed in the stack--too big for the port?

   The EGR probe requires a minimum 4-inch port.

5. If you do not have good PM_{10} emission factors, can a State use a Method 5 emission test and assume the emissions are all PM_{10}?

   The EPA would suggest following the test procedure described in Appendix C of the SIP guideline to determine the PM_{10} portion of the emission gas stream. Use of Method 5 emission test method will provide an overestimate of the emissions.

EMISSION LIMITS/CONTROL STRATEGIES

1. How does a State quantify the emissions during startup/shutdown/malfunctions?

   The point of the provisions for addressing startups, etc., was not that the State must quantify emissions from these periods, rather that the State regulations be designed as discussed in section 7.4.

2. If emissions are mostly (e.g., 70 percent) PM_{10}, do the the PM limits have to be revised to be PM_{10} limits?

   No, not if the SIP can attain the NAAQS without doing so.

3. Will a State in the next 5 years have PM_{10}, TSP, and visible emission (V.E.) limits for a source?

   V.E. limits are required by 40 CFR 51.212(b), and TSP or PM_{10} limits will be necessary to restrict the mass emission rate from a source. The combination of these emission limits must protect the PM_{10} NAAQS and restrict consumption of TSP increments under the program to prevent significant deterioration.

4. What is the most effective way of cleaning streets? The Midwest Research Institute report was inconclusive.

   The most effective way is to prevent material from depositing on street surfaces. Additional guidance is forthcoming in a project being conducted by EPA.

5. Does EPA have a list of RACT that can be used to evaluate the control strategies?

   No. However, EPA can help in providing references on available control measures.

6. How current is the MRI report on control of fugitive emissions?

   The report includes references through spring, 1984. Some update will be provided through the above mentioned EPA fugitive dust project.

7. The EPA needs a clearinghouse on control strategies.

   The EPA has a clearinghouse on control techniques and will act as a focal point for control strategies.

8. When must the State start enforcing the new emission limits?

   As soon as possible so attainment can be as expeditious as possible.

MISCELLANEOUS ISSUES

1. How do we handle violations of the PM_{10} standards caused by emissions from a foreign country?

   These situations are investigated and resolved case-by-case.

2. What is the interrelationship between air toxic and PM_{10} controls?

   See supplement to SIP guideline, section 9. In general, PM_{10} control strategies should attempt to maximize control of air toxics.

3. If a violation in a Group II or III area is modeled (e.g., as part of an NSR analysis), does the area have to develop a full demonstration SIP?

   SIP revisions have not been required for Group II and III areas because EPA does not have evidence that the NAAQS is being violated or that the SIP is inadequate. If modeling for any reason shows that the SIP is inadequate to protect the PM_{10} NAAQS, a SIP revision and demonstration of attainment is required.

4. The EPA should correlate opacity limits for roadways with emission reductions needed for high, medium, and low silt loadings.

   The EPA Region V is attempting to develop this in studies in Ohio and Indiana.

5. Is there a general requirement that Group III areas must meet RACT?

   No, it is being assumed that the existing emission limits are adequate until EPA receives evidence to the contrary.

6. Does EPA expect more sources to be controlled as a result of PM_{10} implementation? Will there be an improvement in air quality?

   Most of the areas not meeting the PM_{10} NAAQS were also not meeting the TSP NAAQS. Therefore, sources must be controlled and the ambient PM concentration reduced to attain the PM_{10} NAAQS.

7. What is an adequate demonstration for maintenance?

   The SIP should show that the standard will be maintained for the next 10 to 20 years. [51.42, 51.110(h), 51.110(K)(4)]

8. Are Part D transportation control measures (TCM's) applicable to section 110 requirements?

   TCM's implemented to attain the TSP NAAQS must continue to be enforced until it is demonstrated that they are not necessary to attain and maintain PM_{10} NAAQS. If TCM's have not been adopted, they are optional.

9. Does EPA have discretion to revise the SIP once the State submits it?

The EPA cannot and will not revise a SIP as long as it is approvable and will attain the NAAQS. If the State fails to submit an approvable SIP, EPA may have to promulgate a Federal plan.

INTERIM RURAL FUGITIVE DUST POLICY

1. If an area is impacted by seasonal fugitive dust and is not attaining the PM_{10} standard in other seasons due to other sources, does the source have to reduce emissions from those other sources?

   Yes, see SIP guideline supplement section 7.4.

2. Is EPA developing a rural fugitive dust (RFD) policy?

   Yes, the policy was proposed in 52 FR 24716. In the interim, the policy for TSP is being used. See SIP guideline, section 7.11. An area designated under the interim policy must comply with the final policy if an when it is revised.

3. If a Group I area meets the definition of a rural fugitive dust area (RFDA), why is it in Group I?

   Areas are only considered RFDA's if there is evidence that RFD is the primary cause of violations and the area has low population and little impact from industrial sources or wood smoke.

4. If the violations are caused by wood burning, is that rural fugitive dust?

   No, see the answer to question 3.

5. If offsets are required in an RFDA, do they have to be fugitive or stack emissions?

   Either.

6. How is wood smoke considered when determining if an area is RFDA?

   Currently, it is being addressed on a case-by-case basis. It will be addressed in the final RFD policy.

7. What is normal background?

   The average PM_{10} concentration measured at a remote regional scale monitoring site. See Appendix D of the SIP guideline.

8. Where are the rural fugitive dust areas presently designated under PM_{10}?

   New Mexico, Kansas, and Nebraska.

9. What are the requirements for RFDA?

Those areas that meet the requirements of an RFD area are placed in Group III and are subject to Group III SIP requirements.

10. Can additional areas be classified as RFDA's and if so when?

Yes, if a State requests at any time that the area be classified as RFDA and can show that it meets the requirements for an RFDA. The area must also comply with the final policy if and when it is revised.

ENFORCEMENT OF PM_{10} RULES

1. Can you use V.E. regulations to control emissions from storage piles?

   Yes, to enforce control measures such as wet suppression or wind screens.

2. Does a State have to enforce new emission limits before the attainment date?

   Yes, see SIP guideline supplement section 7.4.

3. Can EPA provide guidance on enforcement of nontraditional controls in the SIP's?

   Additional guidance on fugitive dust controls is being prepared by EPA. Compliance methodology must be specified in the SIP's.

4. What is required in a Group III area if the SIP is unenforceable?

   If EPA knows a PM regulation is unenforceable, the State will be required to revise the regulation to make it enforceable.

SIP DISAPPROVAL/SANCTION POLICY

1. Can withheld State Grant Funds be used to pay EPA salaries or contractors?

Withheld funds can be used to pay for contractor (not EPA salaries) to prepare EI, modeling, etc.

2. How can EPA use section 176(b) as a sanction if Part D no longer applies?

Section 176(b) states that "[if the State] is not implementing any requirement . . . under section 110 . . . the Administrator shall not make any grants under this Act."

3. Will sanctions result from only a State failure to submit a plan or will EPA sanction a State for missing development plan milestones? What authority does EPA have to impose sanctions before 9 months?

The EPA's policy on failure to attain is being developed. However, EPA does not intend to impose sanctions for failing to meet a milestone in a schedule to develop and implement a SIP, but the State's record in meeting milestones will be a factor in determining when sanctions will be imposed.

4. Can EPA use sewage facility sanctions under section 316 of the Act?

The EPA can condition or withhold grants for construction of new treatment works if new sewage treatment capacity would be created that may cause or contribute to an increase in PM_{10} emissions in excess of those planned for the SIP. However, under a separate policy, EPA has limited construction grants only to address existing needs. Thus, these sanctions have little value.

5. If there is a State/local consolidated grant and the local submits a proper SIP but the State is recalcitrant, can the sanctions be applied against the State part and not the local part of this grant?

If Federal grant funds are given directly to the local agency, this will continue if the agency is meeting EPA requirements. Sanctions on funds that are passed through the State agency depend on regulations between the State and local agency.

6. Are specific funds being set aside in the grants for PM_{10} SIP development?

The EPA identified $2 million of its section 105 grant funds in 1986 and 1987 for use in development of PM_{10} SIP's. In 1988, between $1 million and $2 million were again designated for use in preparing PM_{10} SIP's.

7. If PM_{10} SIP is nonapprovable and cannot demonstrate attainment in 3 to 5 years, what do they do? Do sanctions apply only for failure to submit a SIP?

The EPA's policy on failure to attain is being developed.

EMERGENCY EPISODE PLANS

1. Regarding priority classifications, is it true that we do not look at annual geometric mean for PM_{10}? Are classifications revised from those of TSP?

   The EPA has not revised the criteria for classification of Regions for emergency episode plans with regard to particulate matter under 40 CFR 51.150. States would be wise to reevaluate their priority classifications as required by 40 CFR 51.153 to determine if Group I and Group II areas for PM_{10} should have emergency episode plans.

2. Can you use emergency episode strategy as part of your control strategy?

   No, the emergency episode strategy is designed to achieve extra temporary emission reductions beyond those needed under normal meteorological conditions.

3. What emergency powers do States have to shut down industries during harmful episodes?

   The State, in adopting an emergency episode plan, is giving the State agency authority to order emission reductions for the purpose of avoiding PM concentrations at significant harm levels.

NEW SOURCE REVIEW

1. Will the full TSP increment be available after a TSP nonattainment area is redesignated to unclassifiable?

   The applicable baseline date would be established on the date of the first complete prevention of significant deterioration (PSD) application (for particulate matter emissions) which is submitted on or after the date when the area is designated as unclassifiable for TSP. The full increment may not be available, however, in cases where actual emission increases in the baseline area have occurred from major stationary sources on which construction commenced after January 6, 1975. Conversely, expansion of the allowable TSP increment may have to be taken into account if actual emission reductions (from major sources) occur prior to the baseline date. Actual emission decreases involving construction at a major stationary source occurring since January 6, 1975 will expand the increment if such decreases are included in a federally enforceable permit or SIP.

2. What is the rationale for maintaining the section 107 area designations for TSP when there are no longer TSP NAAQS?

   The TSP area designations have been retained because of their direct relationship to the applicability of the statutory Class II (and III) increments for particulate matter. (The EPA intends to keep the existing TSP increments in force until States have adopted new PM_{10} increments in their SIP's.) Under section 162(b) of the Act, areas designated as attainment or unclassifiable are defined as Class II areas (unless otherwise established as Class I areas or redesignated under section 164). The EPA believes that this provision applies on a pollutant basis so that the Class II TSP increments under section 163(b)(2) apply only in Class II TSP areas, i.e., TSP attainment or unclassifiable areas.

   It should be noted that EPA intends to allow States to redesignate any existing TSP nonattainment areas to unclassifiable once a revised implementation plan providing for adequate protection of the PM_{10} NAAQS is approved by EPA.

3. Why are there increments in an area that is nonattainment for PM_{10}?

The reason that EPA has required a PSD increment analysis in an area that is "nonattainment" for PM_{10} is because the existing increments for particulate matter, defined under section 163 of the Act, are based on ambient concentrations of TSP. The significance of this is that EPA, in accordance with its interpretation of applicable portions of the Act, has ruled that the Class II and III TSP increments must continue to apply in areas designated as either attainment or unclassifiable for TSP. As explained in the previous response (to Question 2), the Class II (TSP) increments are to apply in areas designated as attainment or unclassifiable for TSP.

While the TSP increments will continue to apply for several years (approximately September 1991), PSD sources which would not cause violations of the TSP increments, but would cause or contribute to violations of the PM_{10} NAAQS, would not be allowed to proceed with their construction plans, unless the appropriate PM_{10} emission offsets were acquired and approved by the permit granting authority.

4. What triggers new source review (NSR)--TSP or PM_{10}?

Either TSP or PM_{10} may trigger NSR. Generally speaking, however, it would be more accurate to think of NSR being triggered by either particulate matter emissions or PM_{10} emissions. TSP and PM_{10} are ambient indicators of the pollutant particulate matter. NSR requirements are generally triggered by significant amounts of a pollutant which potentially could be emitted by a new or modified source. In the case of particulate matter, significant amounts of either particulate matter emissions or PM_{10} emissions, or both, would require that certain NSR requirements must be addressed. For example, if a major source would emit significant amounts of particulate matter emissions, best available control technology (BACT) and an increment analysis for TSP would be required. If, however, particulate matter emissions would not be emitted in significant amounts, but PM_{10} emissions would (as in the case of a source that could take credit for contemporaneous emission decreases of particulate matter emissions but still finds that its potential emissions of PM_{10} are significant), then the source would be required to apply BACT and comply with the PM_{10} NAAQS. If both forms of particulate matter would be emitted in significant amounts, then, of course, all of the above mentioned requirements would apply.

5. If a PM_{10} NAAQS violation is found in a Group III area, would a PSD review be required for PM_{10}?

Yes, since the PSD requirements for PM_{10} apply everywhere (from a geographic applicability standpoint), PSD review would be required regardless of the PM_{10} grouping or air quality status relative to the

PM_{10} NAAQS. In such instances, where a proposed major source or major modification would cause or contribute to a PM_{10} NAAQS violation, the PSD requirements would have to be augmented by an emission offset requirement under procedures approved in accordance with 40 CFR 51.166(b).

It should also be noted that, in the event a PM_{10} NAAQS exceedance is found in a Group III area, EPA intends to require a SIP revision which must meet the criteria for a Group I area in order to be approvable. Such revision would have to provide for increased ambient monitoring activities and a control strategy which provides for attainment of the PM_{10} NAAQS within 3 years of plan approval. As part of the control strategy, a State may find it necessary to establish more stringent NSR requirements than currently exist for such areas. For example, a State may find it appropriate to establish a requirement that new major sources in the area meet the lowest achievable emission rates for their PM_{10} emissions. Similarly, other Part D-based requirements could be considered as well.

6. What triggers offsets for PM_{10}?

A requirement that a major new or modified source must obtain PM_{10} emission offsets is triggered by a preconstruction review finding that such new or modified sources would cause or contribute to a violation of the PM_{10} NAAQS. States may develop an emission offset program in accordance with the newly amended requirements under 40 CFR 51.165(b) for implementing PM_{10} offsets. The EPA has already ruled that the nonattainment area offset requirements based on Part D of the Act do not apply to PM_{10}.

7. How are PM_{10} precursors taken into account for emission offsetting purposes?

The EPA presently has no policy prescribing allowances for PM_{10} precursors for emission offsetting purposes. No models are yet available to predict ground level PM_{10} concentrations that would result from precursors. As mentioned in the PM_{10} preamble to the July 1, 1987 Federal Register notice (see 52 FR 24707), EPA will review on a case-by-case basis any State requests to incorporate in the SIP a provision allowing precursor offsets for PM_{10} where a site specific model may be proposed for such implementation.

8. When does a PM_{10} source have to obtain emission offsets which provide a net air quality benefit rather than just compensate for its own adverse impact?

This issue was discussed in the July 1, 1987 Federal Register notice (see 52 FR 24684 footnote 14 and discussion on 52 FR 24699, column 1). Basically, a net air quality benefit is required when a proposed major source or major modification would cause or contribute to a violation of the PM_{10} NAAQS (or any other NAAQS) in an area lacking an approved attainment strategy for the particular pollutant.

In the absence of an attainment demonstration, no downward trend in overall emissions has been established; therefore, the proposed source must provide some air quality improvement to help remedy the existing ambient problems. Once a downward trend in emissions is established via an approved attainment demonstration, a new source need only compensate for its adverse emissions so as not to interfere with the attainment demonstration.

9. What happens if a State does not have an approved NSR SIP in a TSP nonattainment area after the construction ban has been lifted?

The EPA considers the provisions of the interpretative rule (Offset Rule) under 40 CFR Part 51, Appendix S, to apply in the absence of a construction ban where a State does not have an approved NSR SIP. Permits issued by States in accordance with the Offset Rule are considered to be federally enforceable by EPA.

10. If a State does not have a PSD program for PM_{10}, why doesn't EPA assume such responsibility?

The EPA assumes immediate responsibility for a PSD program for PM_{10} only in those cases where EPA also has PSD responsibility (i.e., where the SIP has been disapproved with respect to PSD). Where States have an approved PSD program under their SIP, the Act clearly provides 9 months from the promulgation date of regulatory amendments before a revised plan must be submitted to EPA for approval. This statutory provision is reflected in the PSD requirements for SIP's under 40 CFR 51.166(a)(6)(i). The EPA has no authority under the Act to promulgate PSD regulations until a State fails to submit its revised SIP in a timely manner.

June 7, 1988

MEMORANDUM

SUBJECT Revised Model Clearinghouse Operational Plan

FROM: Joseph A. Tikvart, Chief
Source Receptor Analysis Branch (MD-14)

TO: Chief, Air Branch, Region VII
Chief, Technical Support Branch, Region I
Chief, Air and Radiation Branch, Region V
Chief, Air Programs Branch, Regions II, III, IV, VI, VIII, IX, X

On February 9, 1988 I notified you of the expansion of the Model Clearinghouse to include all criteria pollutants. That memorandum explained briefly how the expanded Clearinghouse would operate and identified individuals in the Technical Support Division and in the Air Quality Management Division who would be involved in resolving Agency regulatory modeling issues. The memorandum also promised that we would be revising the 1981 Operational Plan for the Model Clearinghouse to reflect the current operation. Attached is a copy of that revised plan.

To highlight major functions of the operational plan which you should become most familiar with, please note the structure of the Clearinghouse contained in Section 3, particularly Figure 1. Also you should become familiar with the procedures for referring modeling issues to the Clearinghouse, described in Section 4. Appendix B identifies the contacts in the Regions for various types of modeling problems. Please check over these lists for accuracy and keep us informed of any changes of these personnel in your Region.

It should be remembered that the Model Clearinghouse is a service we provide to the Regional Offices. We do not normally deal directly with the State/local agencies or with industry since this would compromise our function as second level reviewers and would interfere with your function. However we have discussed access by States to Clearinghouse expertise through the Regional Offices. Where a State wishes such a contact, we urge your staff to work closely with their State counterparts to establish a mutally agreed-upon position on the issue.

Finally, for purposes of responding to questions from States and local agencies about the Clearinghouse and its operation, we have no problem if you wish to furnish them with a copy of this plan. For questions from the public we would prefer that you instead provide them with a copy of Appendix C, a separate copy of which is attached. This Appendix is a revised version of a flyer we have distributed for a number of years at the EPA booth at the annual APCA meeting.

Summary

The Model Clearinghouse is the single EPA focal point for reviewing the use of modeling techniques for criteria pollutants in specific regulatory applications. The Clearinghouse also serves to compile and periodically report for Regional Office benefit Agency decisions concerning deviations from the requirements of the "Guideline on Air Quality Models (Revised)."

Need for the Model Clearinghouse

The Guideline states that when a recommended model or data base is not used, the Regional Administrator may approve the use of other techniques that are demonstrated to be more appropriate. However, there is also a need to provide for a mechanism that promotes fairness and consistency in modeling decisions among the various Regional Offices and the States. The Model Clearinghouse promotes this fairness and uniformity and also serves as a focal point for technical review of "nonguideline" techniques proposed for use/approval by a Regional Administrator.

Functions of the Model Clearinghouse

The major function of the Clearinghouse is to review specific proposed actions which involve interpretation of modeling guidance, deviations from strict interpretation of such guidance and the use of options in the guidance, e.g., Regional Office acceptance of nonguideline models and data bases. This is handled in two ways: (1) the Clearinghouse, on request from the Regional Office, will review the Region's position on proposed (specific case) use of a nonguideline model for technical soundness and national consistency, and (2) the Clearinghouse will screen Federal Register regulatory packages for adherence to modeling policy and make recommendations for resolution of any issues identified.

A secondary function of the Model Clearinghouse is to communicate to regulatory model users in EPA significant decisions involving the interpretation of modeling guidance. This is accomplished through an annual "Clearinghouse Report" which itemizes the significant decisions that have been made and the circumstances involved. This report serves to improve consistency in future decisions and as a source of technical information for the Regional Offices. In addition to the annual report the Clearinghouse informs users on a contemporary basis of significant decisions through copies of written decisions and briefings at various meetings and workshops.

Structure of the Clearinghouse

The Clearinghouse is formally located in the Source Receptor Analysis Branch (SRAB) of OAQPS. However, the Air Quality Management Division (AQMD) also participates in Clearinghouse matters involving SIP attainment strategies and other regulatory functions.

The primary responsibility for managing the Clearinghouse and ensuring that all of its functions are carried out is performed by a person full-time within SRAB. The responsibility for responding to requests for review of modeling issues is assigned, on a pollutant/program basis to three SRAB individuals. In addition, AQMD supports the Clearinghouse with staff who are also knowledgeable in modeling policy. These individuals are responsible for screening SIP submittals and related documents, referring modeling issues to SRAB through the Clearinghouse and documenting the final (and any significant interim) decision on disposition of the issues.

Communication Chain

The Model Clearinghouse functions within the organizational structure of EPA. As such the Clearinghouse serves the EPA Regional Offices. It coordinates with and communicates decisions to the Regional Offices. Any coordination with State and local agencies and individual sources on Clearinghouse activities is a function of the EPA Regional Offices.

Office of Air Quality Planning and Standards
Research Triangle Park, North Carolina 27711

JUN 27 1988

PN 110-88-06-27-095

MEMORANDUM

SUBJECT: "Grandfathering" of Requirements for Pending SIP Revisions

FROM: Gerald A. Emison, Director
Office of Air Quality Planning and Standards (MD-10)

TO: Director, Air Management Division
Regions I, III, IX
Director, Air and Waste Management Division
Region II
Director, Air, Pesticides and Toxics Division
Region IV, VI
Director, Air and Radiation Division
Region V
Director, Air and Toxics Division
Region VII, VIII, X

Recommendations for improving SIP processing generally at EPA were presented to the Deputy Administrator and approved fully. It is the intention of the Agency's management that the recommendations be implemented promptly. This is being done by an Intra-Agency Work Group composed of Headquarters and Regional Office persons. This memorandum provides guidance on applying previously applicable standards to pending SIP revisions where the relevant requirements have changed since the state prepared the SIP submittal (i.e., "grandfathering").

In a number of cases, States have submitted SIP packages that were consistent with the EPA "requirements" (i.e., standards, regulations, policies, legal interpretations, guidances, and clarifications) in effect at the time. As a result of processing delays and policy evolution, the applicable requirements were revised before the proposed SIP change received EPA approval. When the revised requirements did not contain an appropriate grandfathering provision (e.g., a provision allowing SIP packages to be acted upon based on the requirements in effect at the time of State adoption), SIP reviewers assumed that the appropriate action was to disapprove the SIP revision and/or return it to the State for changes.

Not only can this delay rulemaking, but it also may be inequitable and serve as an irritant to effective EPA/State/local agency cooperation. Moreover, such action usually results in an ineffective use of resources by the State and EPA. Consequently, we are today extending the concept

of grandfathering contained in existing guidance (e.g., for modeling), as described in the enclosure. It is the intent of EPA management that grandfathering be applied where it is warranted and appropriate. Today's guidance was developed in conjunction with the Regional Offices and the Office of General Counsel. We believe that it deals with the equity issue, will not have a noticeable environmental impact overall, will strengthen the Agency's working relationship with its State and local partners, and does not conflict with either the Clean Air Act or the Administrative Procedures Act.

Attachment

cc: Air Branch Chiefs, Regions I-X
Regional Counsel (Air Branch Chiefs), Regions I-X
Don Clay
Alan Eckert
Mike Alushin
John Seitz
Robert Cahill
John Calcagni
Bob Wayland
Dick Wilson
Bill Laxton
Charles Gray

bcc: Work Group Members
Jack Farmer
Rich Ossias
Peter Wyckoff
Bern Steigerwald

GUIDANCE ON GRANDFATHERING OF

REQUIREMENTS FOR PENDING SIP REVISIONS

June 1988

Introduction

EPA is expanding its guidance on how to apply previously applicable requirements in two general situations where the issue may arise: (1) when new or newly revised "requirements" (i.e., standards, regulations, policies, legal interpretations, guidances, or clarifications) for SIPs are issued by the Agency and (2) when rulemaking action is taken on a "SIP revision" (i.e., a State-specific EPA rulemaking under the Clean Air Act). This guidance will be in effect for complete SIP revisions submitted to EPA and for requirements issued and/or revised by EPA after today. In general, all SIP revisions submitted before today will continue to be reviewed based on EPA's current policy, which is to decide each SIP revision based on the requirements in existence at the time of EPA's rulemaking.

Grandfathering is not to be considered mandatory or automatic. In determining whether grandfathering should apply, and what the appropriate date should be, the decision maker should keep in mind the thrust of this guidance, i.e., to honor good faith effort on the part of the State/local agency submitting the revision, balancing equity with other considerations. This guidance expressly is not intended as a vehicle to allow circumvention of tighter requirements or to facilitate the avoidance of difficult decisions.

Legal Background

Whenever a new requirement is established by Congress (via statute) or by EPA (via regulation or policy), it becomes generally applicable unless the authority establishing the requirement provides otherwise. When Congress enacts a new statute, it applies to all matters then pending before an agency unless Congress specifically provides otherwise in the statute. The Agency has no authority to grandfather any matter from the new statutory requirements without explicit provisions in the statute.

When EPA issues new regulations, they are also generally applicable unless the regulations themselves include grandfathering provisions. If grandfathering provisions are not explicit in the regulations and absent a contrary interpretation by the Agency, courts will apply the new rules to matters pending before the Agency. Thorpe v. Housing Authority of

Durham, 393 U.S. 268 (1969). However, an agency does have some flexibility to provide grandfathering provisions in new regulations. Generally, such provisions are appropriate where they meet a four-part test. First, the new rule represents an abrupt departure from well-established practice. Second, affected parties have relied on the old rule. Third, the new rule imposes a large burden on those affected. Fourth, there is no strong statutory interest in applying the new rule generally. Sierra Club v. EPA, 719 F.2d 436 (D.C. Cir. 1982), cert. den. 468 U.S. 1204 (1984). In the past, EPA has generally included explicit grandfathering provisions in new regulations where appropriate. Under this guidance, EPA will affirmatively consider the need for grandfathering provisions in all new regulations.

An agency has very broad authority to decide how and when to issue new guidance, since as a purely legal matter guidance is not absolutely binding on subsequent proceedings. Pacific Gas and Electric Co. v. FPC, 506 F.2d 33 (D.C. Cir. 1974). Historically, EPA has provided only limited grandfathering from revised guidance. This document establishes a detailed framework for grandfathering pending SIP revisions from all future EPA requirements.

The Guidance

The following will be considered in deciding whether to apply grandfathering to an individual SIP revision and in developing appropriate grandfathering provisions for each EPA SIP requirement:

A. General Guidance: A SIP revision generally will remain subject to the requirements in effect either (a) on the date that the State adopts the SIP revision (provided a complete, fully adopted revision is submitted promptly, generally within 60 days of the adoption), or (b) on the date that the USEPA proposes the SIP revision under the parallel processing procedure. However, in specific cases, EPA will apply different dates as appropriate (e.g., see memorandum, J. Tikvart to Regional Modeling Contacts, January 2, 1985, concerning grandfathering modeling requirements). A discussion of what constitutes a complete, fully adopted SIP revision is found in the memorandum, G. Emison to Regional Air Directors, March 18, 1988.

B. There are certain exceptions to the general grandfathering guidance:

1. Grandfathering should not be considered if the State has not acted in good faith in preparing and submitting a SIP revision. For example, an incomplete revision hurriedly submitted to avoid coverage under a new or revised EPA requirement should not be grandfathered. Similarly, grandfathering should not be considered when a SIP revision is submitted

substantially in excess of 60 days after State adoption as specified in paragraph A.

2. Grandfathering of SIP revisions may not be appropriate or possible when a court ruling has explicitly changed a current federal requirement or has convinced EPA that a previous requirement is no longer supportable. Under these circumstances, the Office of General Counsel (OGC), in consultation with the Office of Enforcement and Compliance Monitoring (OECM) and the Office of Air and Radiation (OAR), will define the limits of the court's decision and how it may affect EPA's requirements and SIP revisions, including previously approved SIP revisions, pending SIP revisions, and SIP revisions which are to be submitted in the future. OGC will make its best effort to issue such an opinion within 60 days from the date of the court's decision.

Based on this analysis, OAR will issue a decision on the appropriateness of grandfathering and the continued use of the pre-court ruling requirement on pending and future SIP revisions. This decision will generally be issued within 90 days from the date of the court's decision. OAR will also issue a decision on the appropriate action to take, e.g., notice of SIP deficiency or "no action" needed at this time, on previously approved SIP revisions.

3. The Administrator may determine that grandfathering is not appropriate under a certain new policy. He could conclude that the old policy was ill-founded, or simply not wish to grandfather due to the importance of the new policy to EPA's programs. Where a new policy issued by the Administrator specifically states that grandfathering is not appropriate or establishes a particular grandfathering provision that differs from this guidance, such provisions would of course supersede this guidance.

4. Grandfathering of a particular SIP revision or requirement is not appropriate if a decision to grandfather it would have an imminent and substantial adverse environmental impact or could permanently foreclose the continued use of the provisions and/or sanctions of Part D of the Clean Air Act, e.g., changes in Section 107 designations or the full approval of Part D plans, both of which may foreclose the future use of sanctions to assure the correction of any deficiency arising from the change in EPA requirements.

5. Action on a SIP revision which comports with the revised requirements but not the original requirements may be based on the revised requirements.

6. If a SIP revision complies with the original but not the revised requirements, and such lack of compliance renders the SIP as a whole substantially inadequate to assure the attainment and maintenance of the National Ambient Air Quality Standards (NAAQS) under the revised requirements, an individual analysis of the appropriateness of grandfathering under the four-part test established in the Sierra Club case discussed above under Legal Background must be conducted. If the analysis concludes that grandfathering of the particular SIP revision is appropriate, action may be based on the original requirements. In such an event, however, additional actions may be necessary depending upon the nature of the SIP revision being considered.

a. For SIP revisions (e.g., variances and interim emission limits) which would have an effective lifetime of 2 years or less from the date of EPA final rulemaking, no additional action will generally be taken, because of the length of time it would take for the State and EPA to change the action to comport with the revised requirements. Any subsequent requests for the continuation of grandfathering (i.e., beyond the effective lifetime of the original SIP revision) should be rejected.

b. For SIP revisions which would otherwise have an effective lifetime of greater than 2 years, other rulemaking actions will be necessary to assure that the SIP ultimately comports with the revised requirements.

(i) Elements in plans that have been "conditionally" approved will be approved subject to the further condition that the plan as a whole be corrected as necessary to assure full compliance with all requirements of the Clean Air Act. For a discussion of EPA's original policy on conditional approval, see 44 FR 20372 (April 4, 1979), 44 FR 38583 (July 2, 1979) and 44 FR 67182 (November 23, 1979).

(ii) Elements in fully approved plans will be approved with the simultaneous issuance of a CAA Section 110(a)(2)(H) notice of deficiency.

Under either of these circumstances, the approval of the particular SIP revision should contain a sunset provision that terminates the effectiveness of the approval within a predetermined period, generally 2 years. In addition, the Region should make an affirmative effort to assure that the timeframe (generally 2 years) for complete, fully adopted State rulemaking action involved with either the notice of SIP deficiency or conditional approval is strictly adhered to. If a State does not adhere to this schedule, the Region will initiate appropriate steps to ensure ultimate compliance, e.g., performance-based grant actions, sanctions, and EPA promulgations.

7. Certain classes of changes are only indirectly related to attainment and maintenance of national ambient air quality standards. Such changes may involve PSD/NSR rules, stack height provisions, permit fees and similar generic requirements which are clearly not intended to be permanently grandfathered. Changes of this type are to be handled as described in paragraph 6 above.

C. All new requirements issued by OAR or OGC will address their impact on SIP revisions previously approved or pending, and SIP revisions to be submitted in the future. New requirements will contain provisions incorporating the general grandfathering guidance (paragraph A above) whenever appropriate and possible. Generally, changes in EPA's requirements will have effective dates which are 60 days from the date of signature to allow States to adjust their pending rulemaking actions before they are finally adopted and submitted. Longer effective dates should be used when the changed requirements affect fundamental, long-term air quality strategy development tools and the requirements of the change are resource intensive.

D. SIP revisions framed to meet major requirements currently being reconsidered by EPA or currently under litigation should proceed and will not be held back from rulemaking until the issues are decided. SIP revisions approved under these circumstances will be addressed, if necessary, as described in paragraph B(6)(b) above for revised EPA SIP requirements and by paragraph B(2) for requirements being changed because of court decisions.

E. Staff personnel making grandfathering decisions should coordinate with Offices of Regional Counsel or OGC on application of this guidance as appropriate, especially in connection with the analysis required under paragraph B(6) above.

F. Each Federal Register notice for action on a SIP revision will state the rationale for which requirements were applied.

PN 165-88-07-05-032

UNITED STATES ENVIRONMENTAL PROTECTION AGENCY
Office of Air Quality Planning and Standards
Research Triangle Park, North Carolina 27711

JUL 5 1988

MEMORANDUM

Subject: Air Quality Analysis for Prevention of Significant Deterioration (PSD)

From: Gerald A. Emison, Director
Office of Air Quality Planning and Standards (MD-10)

To: Thomas J. Maslany, Director
Air Management Division (3AM00)

Your memorandum of May 9, 1988, pointed out that two different procedures are currently being used by the Regional Offices in certain PSD permit analyses. The inconsistency involves the question of how to interpret dispersion modeling results to determine whether a source will cause or contribute to a new or existing violation of a national ambient air quality standard (NAAQS) or PSD increment. This memorandum serves to resolve the inconsistency by reaffirming previous Office of Air Quality Planning and Standards guidance provided in a December 1980 policy memorandum (attached). [See PN 165-80-12-16-007]

As you know, the regulations for PSD stipulate that approval to construct cannot be granted to a proposed new major source or major modification if it would cause or contribute to a NAAQS or increment violation. Historically, the Environmental Protection Agency's (EPA's) position has been that a PSD source will not be considered to cause or contribute to a predicted NAAQS or increment violation if the source's estimated air quality impact is insignificant (i.e., at or below defined de minimis levels). In recent years, two approaches have been used to determine if a source would "significantly" (40 CFR 51.165(b) defines significant) cause or contribute to a violation. The first is where a proposed source would automatically be considered to cause or contribute to any modeled violation that would occur within its impact area. In this approach, the source's impact is modeled and a closed circle is drawn around the source, with a radius equal to the farthest distance from the source at which a significant impact is projected. If, upon consideration of both proposed and existing emissions contributions, modeling predicts a violation of either a NAAQS or an increment anywhere within this impact area, the source (as proposed) would not be granted a permit. The permit would be denied, even if the source's impact was not significant at the predicted site of the violation during the violation period. You have indicated that this is the approach you currently use.

The second approach similarly projects air quality concentrations throughout the proposed source's impact area, but does not automatically assume that the proposed source would cause or contribute to a predicted NAAQS or increment violation. Instead, the analysis is carried one step further in the event that a modeled violation is predicted. The additional step determines whether the emissions from the proposed source will have a significant ambient impact at the point of the modeled NAAQS or increment violation when the violation is predicted to occur. If it can be demonstrated that the proposed source's impact is not "significant" in a spatial and temporal sense, then the source may receive a PSD permit. This approach is currently being used by Region V and several other Regional Offices, and is the approach that you recommend as the standard approach for completing the PSD air quality analysis.

In discussing this matter with members of my staff from the Source Receptor Analysis Branch (SRAB) and the Noncriteria Pollutant Programs Branch (NPPB), it appears that different guidance has been provided, resulting in the two separate approaches just summarized. We have examined the history and precedents which have been set concerning this issue. I also understand that this issue was discussed extensively at the May 17-20, 1988 Regional Office/ State Modelers Workshop, and that a consensus favored the approach being used by Region V and several other Regions. Based on this input, as well as your own recommendation, I believe the most appropriate course of action to follow is the second approach which considers the significant impact of the source in a way that is spatially and temporally consistent with the predicted violations.

By following the second approach, three possible outcomes could occur:

(a) First, dispersion modeling may show that no violation of a NAAQS or PSD increment will occur in the impact area of the proposed source. In this case, a permit may be issued and no further action is required.

(b) Second, a modeled violation of a NAAQS or PSD increment may be predicted within the impact area, but, upon further analysis, it is determined that the proposed source will not have a significant impact (i.e., will not be above de minimis levels) at the point and time of the modeled violation. When this occurs, the proposed source may be issued a permit (even when a new violation would result from its insignificant impact), but the State must also take the appropriate steps to substantiate the NAAQS or increment violation and begin to correct it through the State implementation plan (SIP). The EPA Regional Offices' role in this process should be to establish with the State agency a timetable for further analysis and/or corrective action leading to a SIP revision, where necessary. Additionally, the Regional Office should seriously consider a notice of SIP deficiency, especially if the State does not provide a schedule in a timely manner.

(c) Finally, the analysis may predict that a NAAQS or increment violation will occur in the impact area and that the proposed source will have a significant impact on the violation. Accordingly, the proposed source is considered to cause, or contribute to, the violation and cannot be issued a permit without further control or offsets. For a new or existing NAAQS

violation, offsets sufficient to compensate for the source's significant impact must be obtained pursuant to an approved State offset program consistent with SIP requirements under 40 CFR 51.165(b). Where the source is contributing to an existing violation, the required offsets may not correct the violation. Such existing violations must be addressed in the same manner as described in (b) above. However, for any increment violation (new or existing) for which the proposed source has a significant impact, the permit should not be approved unless the increment violation is corrected prior to operation of the proposed source (see 43 FR p.26401, June 19, 1978; and 45 FR p.52678, August 7, 1980).

Your memorandum also states that other air quality analysis issues exist within the NSR program which need consistent national guidance. You recommend a more coordinated effort between SRAB and NPPB to review outstanding NSR issues. We agree; however, rather than establishing a formal work group as you propose, we are optimistic that the formal participation of representatives of the NSR program in the Modeling Clearinghouse will help resolve coordination problems. Earlier in the year, the Modeling Clearinghouse was officially expanded to include representation from the NPPB to coordinate PSD/NSR issues which have a modeling component.

I trust that this is responsive to the concerns which you have raised. By copy of this memorandum, we are also responding to a Region V request for clarification on the same issue (memorandum from Steve Rothblatt to Joe Tikvart/Ed Lillis, dated February 18, 1988).

Should you have any further questions concerning this response, please feel free to contact Gary McCutchen, Chief, New Source Review Section, at FTS 629-5592.

Attachment

cc: Air Division Directors, Regions I-X
Air Branch Chiefs, Regions I-X
D. Clay
J. Calcagni
J. Tikvart
E. Lillis
G. McCutchen
D. deRoeck

PN 110-88-11-21-099

UNITED STATES ENVIRONMENTAL PROTECTION AGENCY
Office of Air Quality Planning and Standards
Research Triangle Park, North Carolina 27711

NOV 21 1988

MEMORANDUM

SUBJECT: Revision to Policy on the Use of PM_{10} Measurement Data

FROM: Gerald A. Emison, Director
Office of Air Quality Planning and Standards (MD-10)

TO: See Attached List

A joint Office of Air Quality Planning and Standards (OAQPS)/Environmental Monitoring Systems Laboratory (EMSL) committee has evaluated the issue of potential uncertainty in measurement data produced by PM_{10} samplers. They considered modifications and/or clarifications to existing Environmental Protection Agency (EPA) policy contained in the PM_{10} SIP Development Guideline (Section 2.3), the supplementary Response to Questions Regarding PM_{10} State Implementation Plan (SIP) Development (published June 1988), and the data requirements of Appendix K to 40 CFR 50 and Part 58. This committee's issue paper which incorporated comments from Regional staff is attached. This memo follows their recommendations and presents the revised EPA policy regarding the treatment of PM_{10} data produced by reference and nonreference PM_{10} samplers. Treatment of data produced by collocated PM_{10} samplers is also discussed. Deviations to this general policy must receive concurrence of OAQPS.

For this discussion, the term reference sampler shall be used to represent samplers using a reference method based on Appendix J to 40 CFR 50 and designated by EPA in accordance with 40 CFR 53, as well as samplers using an equivalent method designated by EPA in accordance with 40 CFR 53. Nonreference samplers are all other PM_{10} samplers which have not been formally designated as such.

USE OF REFERENCE AND NONREFERENCE SAMPLER DATA

For purposes of evaluating PM_{10} air quality status, all data produced by reference samplers shall be interpreted at face value and can be used to make comparisons with the National Ambient Air Quality Standards (NAAQS) for the purposes of determining attainment or nonattainment, in accordance with

Appendix K to 40 CFR 50. Data collected by nonreference samplers may only be used to supplement and to corroborate data collected by reference samplers where such data are insufficient in quantity to make a determination of whether or not the area is attaining or not attaining the standard. Moreover, data collected by some nonreference PM_{10} samplers shall be interpreted using gray zones to indicate the potential uncertainty in these older data, which was the policy used for determination of Group I, II and III areas. These details for using data produced by nonreference samplers in order to interpret status with respect to the 24-hour and annual NAAQS are contained in Attachment A. Three situations are discussed: attainment, nonattainment and indeterminate. The latter situation is one in which sufficient reference and nonreference data are not available to make an unambiguous attainment or nonattainment determination.

Regulations in 40 CFR 58 require that State and Local Air Monitoring Stations (SLAMS) Networks be established by August 1, 1988; therefore, data collected after this date by nonreference samplers shall not be used. If a nonreference sampler without further modification is designated as a reference sampler in the future, then all of its historical data is retroactively defined as data produced by a reference sampler.

A table providing a general overview of this new policy for interpretation of PM_{10} measurement data is included as Attachment B. The treatment of reference and nonreference data is described according to the dates associated with its collection.

COLLOCATED PM_{10} SAMPLERS

In the event that more than one PM_{10} sampler is operating concurrently at a location, data from reference method samplers always takes precedence over data from nonreference samplers. If multiple samplers are collocated for data quality assessment purposes (i.e., precision and accuracy), similar sampler types must be used and one sampler must be designated a priori for data reporting purposes (Appendix A to 40 CFR 58). Furthermore, if more than one type of sampler is used by a reporting organization, collocated precision sites should be established for each sampler type.

In order to sample more frequently than every 6th day, more than one sampler may be operated at a monitoring site. This group of samplers, plus any samplers sited for data quality assessment purposes, shall represent a single monitoring

station. When more than one sampler (or group) is operated independently by one or more monitoring agencies concurrently for attainment assessment purposes, each sampler (or group) shall represent a different monitoring station. The data from each monitoring station shall be used separately to assess attainment or nonattainment with the NAAQS, provided that the data meet all the requirements for SLAMS specified in 40 CFR 58, includes quality assurance and siting, and a quality assurance program that has been approved by the appropriate Regional Office.

Attachments

Addressees:
Director, Air Management Division, Regions I, III, IX
Director, Air and Waste Management Division, Region II
Director, Air, Pesticides and Toxics Management Division, Region IV
Director, Air and Radiation Division, Region V
Director, Air, Pesticides and Toxics Division, Region VI
Director, Air and Toxics Division, Regions VII, VIII, X
Director, Environmental Services Division, Regions I-VIII, X
Director, Office of Policy and Management, Region IX

cc. G. Foley, AREAL
A. Eckert, OGC

bcc. D. Novello, OGC
J. Bachmann (MD-11)
PM_{10} Measurement Data Working Group
PM_{10} Monitoring Contacts
PM_{10} SIP Contacts

ATTACHMENT A:

USE OF NONREFERENCE PM_{10} DATA TO SUPPORT AND CORROBORATE REFERENCE PM_{10} DATA

COMPARISONS WITH THE 24-HR NAAQS

Data produced by nonreference samplers may be interpreted subject to the following conditions: (1) Exceedances measured with certain PM_{10} dichotomous samplers[1] shall be treated the same as exceedances measured with reference or equivalent method samplers, but only when there also are one or more exceedances subsequently measured with reference samplers at the same location. (2) Data produced with other nonreference samplers shall be interpreted using gray zones (as previously defined in the PM_{10} SIP Development Guideline and which were used for SIP area grouping) as follows - (a) an exceedance measured with a nonreference sampler outside its gray zone can be treated as an exceedance of the NAAQS, only when there also are one or more exceedances subsequently measured with reference samplers at the same location, and (b) a PM_{10} value produced by a nonreference sampler which is in its gray zone is not treated as an exceedance of the NAAQS nor is it treated as a nonexceedance of the NAAQS (i.e. it is treated as an uncertain data value for purposes of making comparisons with the NAAQS), but it does count as a measurement used to satisfy data completeness and compute annual averages.

Accordingly, data produced by nonreference method samplers in combination with data produced with reference method samplers may be used to identify the following situations:

24-hr NAAQS - Attainment Situation

If (1) the total number of observed exceedances measured by reference and nonreference samplers results in an estimated number of exceeedances to be less than or equal to one (subject to the rounding conventions and adjustments specified in Appendix K), (2) uncertain data values produced by nonreference samplers as defined above do not exist, and (3) the combined data produced by these samplers satisfy the data completeness requirements in Appendix K and are in accordance with the established EPA guidelines, i.e. Guideline on Exceptions to Data Requirements for Determining Attainment of Particulate Matter Standards (EPA-450/4-87-005, April 1987), then the State can

[1]Samplers with inlet models SA246B, GMW9200 and WA10.

solicit approval by the appropriate Regional Administrator to demonstrate attainment with the 24-hr NAAQS.

24-hr NAAQS - Nonattainment Situation

If (1) the total number of observed exceedances measured by a reference sampler results in an estimated number of exceedances to be greater than one, or (2) one or more exceedances are observed by a reference sampler and the total number of observed exceedances measured by reference and nonreference samplers results in an estimated number of exceedances to be greater than one (subject to the rounding conventions and adjustments specified in Appendix K), then the State should acknowledge that a nonattainment problem exists and take appropriate action.

24-hr NAAQS - Indeterminate Situation

If the total number of observed exceedances results in an estimated number less than or equal to one, but the available data is insufficient to demonstrate attainment as judged under Appendix K, the State or local monitoring agency must continue PM_{10} sampling until attainment or nonattainment of the NAAQS can be established.

COMPARISONS WITH THE ANNUAL NAAQS

When insufficient reference data are available to estimate the PM_{10} expected annual mean according to Appendix K, then nonreference data can be used to supplement and corroborate data produced by the reference samplers. In order to facilitate this discussion, the following definitions are introduced:

(1) x_r and x_m represent the annual means computed from data produced by reference and nonreference samplers, respectively.

(2) x'_m represents the nonreference mean adjusted for the effect of the gray zone, as follows:

x'_{NR} = 1.2 x_{NR}, if nonreference data is Wedding[2],
= 0.8 x_{NR}, if nonreference data is Sierra Anderson[3],

= x_{NR}, if nonreference data is produced by certain dichotomous samplers specified in footnote 1.

(3) x and x′ represent the range of estimated annual means resulting from a combination of data produced by reference and nonreference samplers and the effects of the gray zones:

$x = p * x_{NR} + (1-p) * x_R$, and
$x' = p * x'_{NR} + (1-p) * x_R$,

where p is the relative weight placed on the nonreference data (e.g. p = 1/3 when 1 year of nonreference and 2 years of reference data are available).

Annual NAAQS - Attainment Situation

If x_R is less than or equal to 50 ug/m³ and both x and x′ are also less than or equal to 50 ug/m³ (subject to the rounding conventions and adjustments specified in Appendix K), then the nonreference data have corroborated that the expected annual mean is less than the level of the NAAQS and the State can solicit approval by the appropriate Regional Administrator to demonstrate attainment with the NAAQS.

Annual NAAQS - Nonattainment Situation

If x_R is greater than 50 ug/m³ and both x and x′ are also greater than that concentration level (subject to the rounding conventions and adjustments specified in Appendix K), then the State should acknowledge that a nonattainment problem exists and take appropriate action.

Annual NAAQS - Indeterminate Situation

If (1) x_R is less than or equal to 50 ug/m³, and x or x′ is greater than 50 ug/m³, or (2) x_R is greater than 50 ug/m³, and x or x′ is less than or equal to 50 ug/m³, then the

---

[2]GMW9000 or any comparable Wedding designed high volume PM_{10} sampler without a cleaning port.

[3]SA321A

status with respect to the annual standard is indeterminate and the State or local monitoring agency must continue PM_{10} sampling until attainment or nonattainment of the NAAQS can be established.

ATTACHMENT B

REVISED POLICY FOR INTERPRETATION OF PM_{10} MEASUREMENT DATA

	DATA COLLECTION TIME PERIOD		
	Prior to Aug. 1, 1987 (effective date of promulgation)	Aug 1, 1987 to July 31, 1988	From Aug. 1, 1988
PM_{10} Sampler:			
Reference Samplers	Face Value	Face Value	Face Value
Unapproved Samplers[1]			
SA & Wedding (older)	Gray Zone[2]	Gray Zone	Not to be Used[3]
Dichots	Face Value	Face Value	Not to be Used[3]

[1] Data produced by unapproved samplers may only be used to support and corroborate data produced by reference samplers.

[2] A zone of uncertainty within which PM_{10} data are used with less authority, as discussed in Attachment A; Gray zone limits were defined in the PM_{10} SIP Development Guideline.

[3] For attainment/nonattainment and design values only; Regional Administrator approval for other SIP purposes (40 CFR 58.14(b)).

Authority: Secs. 1-19, 48 Stat. 31, as amended; 7 U.S.C. 601-674.

2. Section 959.229 is added to read as follows:

§ 959.229 Expenses and assessment rate.

Expenses of $379,675 by the South Texas Onion Committee are authorized and an assessment rate of $0.055 per 50-pound container or equivalent quantity of regulated onions is established for the fiscal period ending July 31, 1989. Unexpended funds may be carried over as a reserve.

Dated: January 13, 1989.

William J. Doyle,

Associate Deputy Director, Fruit and Vegetable Division.

[FR Doc. 89-1250 Filed 1-18-89; 8:45 am]

BILLING CODE 3410-02-M

DEPARTMENT OF THE TREASURY

31 CFR Part 103

Extension of Time for Comments on Proposed Bank Secrecy Act Regulations

AGENCY: Departmental Offices, Treasury.

ACTION: Advance notice of proposed rulemaking, extension of comment period.

SUMMARY: Notice is hereby given that the Department of the Treasury is extending the comment period on the Advance Notice of Proposed Rulemaking Relating to Identification Requirements Required to Purchase Bank Checks, Cashier's Checks, Traveler's Checks and Money Orders, published in the **Federal Register** on December 23, 1988 (53 FR 51846). The Treasury Department has determined that more time is needed for the public to review and comment on the proposal.

DATE: Comments now will be accepted through February 15, 1989.

ADDRESS: Comments should be addressed to Amy G. Rudnick, Director, Office of Financial Enforcement, Department of the Treasury, Room 4320, 1500 Pennsylvania Avenue, NW., Washington, DC 20220.

FOR FURTHER INFORMATION CONTACT: Kathleen A. Scott, Attorney Advisor, Office of the Assistant General Counsel (Enforcement), (202) 566-9947.

Dated: January 13, 1989.

Salvatore R. Martoche,

Assistant Secretary (Enforcement).

[FR Doc. 89-1204 Filed 1-18-89; 8:45 am]

BILLING CODE 4810-25-M

ENVIRONMENTAL PROTECTION AGENCY

40 CFR Part 51

[FRL-3428-2]

State Implementation Plan Completeness Review

AGENCY: Environmental Protection Agency (EPA).

ACTION: Notice of Proposed Rulemaking.

SUMMARY: This notice describes the procedure for assessing whether a State implementation plan (SIP) submittal is adequate to trigger the Clean Air Act requirement that EPA review and take action the submittal. The notice describes, among other things, the criteria for determining the "completeness" of the submittal. EPA is concerned that uncertainty and excessive delays in reviewing SIPs frustrate the development of an optimum State/Federal partnership, cause confusion for sources regarding applicable regulations, and generally dampen initiative in State regulatory programs. Prompted by this concern, EPA is instituting a wide range of SIP processing reforms as described elsewhere in this **Federal Register**. The proposed rulemaking described below is one of these reforms.

EPA's previous SIP processing procedures provided no mechanism to reject or otherwise eliminate essentially unreviewable SIP submittals (i.e., those missing information necessary to make a reasonable decision as to their procedural and environmental adequacy). Heretofore, SIP submittals that lacked required basic information such as evidence of legal authority or of properly conducted public hearings, or technical support information sufficient to describe a proposed change, generally went through full notice and comment rulemaking (proposed and final) before being rejected. Today's proposal provides a procedure and screening criteria to enable States to prepare adequate SIP submittals, and to enable EPA reviewers to promptly screen SIP submittals, identify those that are incomplete, and return them to the State for corrective action without having to go through rulemaking.

EPA believes that this change, together with those described elsewhere in this **Federal Register**, should enable SIP submittals to be prepared and processed more efficiently and, overall, should improve the quality of SIP submittals.

DATE: All comments should be submitted to EPA at the address shown below by March 6, 1989.

ADDRESSES: Interested parties may submit written comments in duplicate to Public Docket No. A-88-18 at: Central Docket Section (A-130), South Conference Center, Room 4, U.S. Environmental Protection Agency, Attention: Docket No. A-88-18, 401 M. Street, SW., Washington, DC 20460.

Materials relevant to this rulemaking have been placed in Docket No. A-88-18 by EPA and are available for inspection at the above address between 8:00 a.m. and 3:30 p.m., Monday through Friday. The EPA may charge a reasonable fee for copying.

FOR FURTHER INFORMATION CONTACT: Mr. James Weigold, Office of Air Quality Planning and Standards (MD-11), U.S. Environmental Protection Agency, Research Triangle Park, North Carolina 27711; Telephone (919) 541-5642 or (FTS) 629-5642.

SUPPLEMENTARY INFORMATION:

Background

The 1970 Clean Air Act (CAA) established the air quality management process as a basic philosophy for air pollution control in this country. Under this system, EPA establishes air quality goals (National Ambient Air Quality Standards—NAAQS) for common pollutants. There are now standards for 6 pollutants: ozone, carbon monoxide, sulfur dioxide, nitrogen dioxide, particulate matter (PM_{10}, and lead. States then develop control programs to attain and maintain these NAAQS. These programs are defined by State Implementation Plans (SIPs) which are approved formally by EPA and are legally enforceable by the Agency. Under section 110(a)(2), a SIP must demonstrate attainment, describe a control strategy, contain legally enforceable regulations, include an emission inventory, and procedures for new source review, outline a program for monitoring, and show adequate resources. In addition, there can be many other requirements specific to the pollutant being considered. Under section 110(a)(3), revisions to a SIP must not interfere with the SIPs ability to meet these requirements. The consequences of State failure to get SIP approval may be serious; they include Federal promulgation of control regulations and economic sanctions.

Affirmative action is required by EPA on essentially all aspects of every SIP and SIP revision. Since EPA's final decision comes after a regulation already is adopted and implemented at the State level, excessive delay in the review process often is a major source of friction in EPA's relations with State

and local agencies. SIP processing at EPA has a schedule goal of 5/2-5/2 for final action. That is, the Regions nominally have 5 months to review submittals in both the proposal and promulgation phases: Headquarters nominally has 2 months in each phase. However, SIP actions often take considerably longer than the total 14 months allocated to publish a final decision.[1]

The lengthy decision process has resulted in strong criticism from sources both inside and outside the EPA. In response, the Deputy Administrator commissioned in July 1987 a senior level task group to assess the problems inherent in the process and to recommend solutions. The task group conducted its assessment and presented recommendations to the Deputy Administrator. The recommendations were approved fully and are described in a companion notice in today's Federal Register. One of these recommendations concerns a procedure and criteria for identifying a "complete" SIP package, thereby providing States with guidance on preparing adequate SIP revisions and EPA with a clearly defined mechanism to keep essentially unreviewable SIP revisions out of the review process.

This is important because if a State submits a SIP change without properly stated emission limits, legal authority or compliance schedules, or which contains other obvious deficiencies, it can enter the full EPA review system. Such a SIP either will be eventually disapproved, or languish while the State is required (perhaps months later) to supply essential data. Heretofore, EPA's procedures did not provide in any comprehensive way prompt rejection for incompleteness. Independently, however, some Regional Offices have tried to deal with this problem, and have developed procedures wherein SIP submittals are judged against a set of completeness criteria. The purpose of these procedures has been to keep incomplete packages out of the more extensive review system, thereby saving both EPA and the State valuable time and resources. Today, EPA is proposing to institute an EPA-wide procedure for completeness review of all SIP submittals.

[1] Note that section 110(a)(2) of the Clean Air Act requires that "The Administrator shall, within four months after the date required for submission of a [SIP] approve, or disapprove such [SIP] for each thereof." Under the Agency's present processing workload, such a time limit is literally impossible to meet for all but the most trivial of actions. EPA maintains that this deadline does not apply to SIP revisions, but rather only to the initial SIP submitted after EPA promulgates a NAAQS. Courts have supported EPA's position, other courts have held that a 4-month review period applies to a SIP revision.

Completeness Review

In order to free EPA resources that would otherwise be consumed in processing incomplete and inherently unapprovable SIPs, EPA has created a completeness review process. Under this process, EPA will review a SIP for completeness when it is initially submitted to determine if all the necessary components have been included to allow the agency to properly review and act on the substance of the SIP revision. This will be a quick screen that will assess the reviewability of a SIP submittal, not its ultimate approvability. EPA will then promptly inform the submitting State whether the agency will proceed to process the SIP revision or if it must be modified by the State because it is incomplete.

There are several benefits to an early determination of completeness. First, the State is informed promptly as to the reviewability of the submittal, a current source of uncertainty in the SIP process. Second, SIP submittals that are inadequate for processing are returned to the State to be corrected, rather than going through the review process only to be disapproved because of a lack of information. Third, unreviewable SIPs are removed from the process early so that resources at the Federal level are allocated to processing only SIPs that are adequate for review. Finally, the completeness criterial provide the States with guidelines on how to prepare reviewable SIPs. It is expected that once the agencies involved (State and local, EPA) become accustomed to the completeness review process, the number of unreviewable submittals will diminish sharply.

Screening criteria have been developed that define the essential elements of an acceptable package, that will avoid obvious inadequacies, and that can be applied uniformly with limited subjective judgement and review. The criteria were developed by EPA Regional Offices already using a list of criteria to determine completeness of SIP packages in an informal way. On March 18, 1988 a policy for determining completeness of SIP submittals was issued by Gerald A. Emison, Director, Office of Air Quality Planning and Standards (OAQPS), to the Regional Offices (a copy has been placed in the docket as item II-B-4). The policy includes basic criteria for determining completeness, and sample letters for accepting and rejecting SIP submittals. This policy will be followed by EPA until today's proposed regulation is made final.

As part of this action, the Administrator is proposing to add these criteria for determining the completeness of State submittals to 40 CFR Part 51 as Appendix V. In addition, EPA proposes to modify § 51.103(a) such that State submissions that do not meet the criteria are not considered official plan submissions for purposes of meeting the requirements of Part 51. In order to be considered as a complete SIP submission or an official submission for Part 51, each plan must meet the criteria described below and in Appendix V. The basic criteria are adaptable for use in parallel processing of State regulations by EPA.[2]

EPA is creating this completeness review process under the authority of Section 301 of the Clean Air Act, which authorizes the Administrator to prescribe such regulations as are necessary to carry out his functions under the Act. EPA is interpreting the terms "plan" in section 110(a)(1) and (2) and "revision" in Section 110(a)(3) to be only those plans and revisions that contain all of the components necessary to allow EPA to a adequately review and take action on such plan or revision under section 110 (and, where applicable, Part D). EPA believes that Congress would not have intended to require EPA to review and take action on SIP submittals that were simply not reviewable because they were lacking important components. Therefore, the Administrator concludes that Section 110(a) requires him to act only on complete State submittals.

Completeness Criteria

The criteria for determining whether a submittal by the State is complete have been separated into two categories: (a) Administrative information and (b) technical support information. Administrative information includes the documentation necessary to demonstrate that the basic administrative procedures have been adhered to by the State during the adoption process. Technical support information includes the documentation that adequately identifies all of the required technical components of the plan submission.

Administrative Information

The administrative information required by the criteria are those basic

[2] Parallel processing is a procedure by which EPA processes as a proposal State rules which have not yet been fully adopted by the State in order to expedite the final review process.

documents that demonstrate that the State has properly followed the administrative requirements called for by the Clean Air Act for the adoption of State implementation plans. These include a letter from the Governor or his designee requesting that EPA approve the SIP revision, and evidence that the revision has been adopted by the State in final form, either as part of the State code if the revision is a regulation, or as appropriate source specific documentation in the form of a permit, order, or a consent agreement. The State also must provide documentation that the necessary legal authority exists within the State to adopt and implement the plan revision, must include the requisite copies of the actual revision (regulation, permit, order, etc.), and must indicate that the revision is enforceable by the State. Finally, the State must submit information indicating that the program administrative procedures have been followed, including evidence of public notice and hearings, a compilation of the public comments, and the State's response to these comments.

Technical Support

The purpose of the technical support information is to identify the State's view of the impact of the revision on the environment. The components are intended to demonstrate that the applicable requirements, such as those for attainment and maintenance of ambient standards, increment consumption, and control technology, are in conformance with basic statutory and EPA requirements. In order for EPA to make a reasonable decision concerning the adequacy of a proposed SIP revision, certain information at a minimum must be included in each submittal. Therefore, for purposes of determining the completeness of a SIP submission the implementation plan revision must include an adequate description of the:

(a) Pollutants involved;

(b) Source location and attainment status of the area;

(c) Emissions changes;

(d) Demonstration that standards/increments are protected;

(e) Information used for any modeling demonstration;

(f) Evidence of continuous emissions controls;

(g) Evidence of emissions limitations and other restrictions necessary to ensure emission levels;

(h) Compliance strategies; and

(i) Technological and economic justification for the change where applicable.

Upon receipt of the plan revision, the Regional Office will objectively examine the revision for inclusion of the administrative and technical support information. When the revision is determined complete, the formal review of the adequacy of the information and the approvability of the revision will proceed. In those situations where the submission does not meet the basic criteria as discussed above and set forth in Part 51, Appendix V, the submission will be returned to the State with a letter indicating the deficiencies found. In accordance with the change proposed in 40 CFR 51.103(a), any submission that does not meet the criteria of Appendix V will not be considered an official submission triggering the Act's requirements for EPA review and action. The basic requirements are similar for sequential and parallel processing, varying only in form dictated by the method of processing. In order to be effective, the determination of completeness should be made expeditiously. The Regional Office generally will make a determination of completeness within 45 days of receiving a SIP revision, using the criteria to make an objective decision.

After the decision has been made on completeness, the Regional Offices will process the SIP revision if the submission is complete, or return the SIP revision to the State if it is incomplete. A letter will be sent to the State, informing the State of the completeness status of the SIP revision. If a SIP submittal is incomplete, the deficiencies will be detailed in the letter to the State. If a SIP submittal is complete, the Regional Office will include EPA's expected processing schedule in the letter to the State.

Administrative Requirements

The docket is an organized and complete file of all the information considered by EPA in the development of these SIP processing changes. The docket is a dynamic file because material is added throughout the notice preparation and comment process. The docketing system is intended to allow members of the public and industries involved to identify and locate documents so that they can effectively participate in the process. Along with the statement of basis and purpose of the SIP processing changes and EPA responses to significant comments, the contents of the docket, except for interagency review materials, will serve as the record in case of judicial review (see Clean Air Act, section 307(d)(7)(A), 42 U.S.C. 7607(d)(7)(A).

Section 317(a) of the Clean Air Act, 42 U.S.C. 7617(a), states that economic impact assessments are required for revisions to standards or regulations when the Administrator determines such revisions to be substantial. The changes described today do not change the substantive requirements for preparing and submitting an adequate SIP package. No increase in cost as a result of complying with the changes described today is expected; moreover, the monitoring, recordkeeping, and reporting requirements have been determined to be insubstantial. Because the expected economic effect of the changes is not substantial, no detailed economic impact assessment has been prepared.

The information collection requirements of these changes are considered to be no different than those currently required by the Clean Air Act and EPA procedures. Thus, the public reporting burden resulting from today's notice is estimated to be unchanged from existing requirements. The public is invited to send comments regarding the burden estimate or other aspect of information collection, including suggestions for reducing any burden, to the docket and the following: Chief, Information Policy Branch, PM-223, U.S. Environmental Protection Agency, 401 M Street SW., Washington, DC 20460; and to the Office of Information and Regulatory Affairs, Office of Management and Budget, Washington, DC 20503, marked "Attention: Desk Officer for EPA."

Under Executive Order 12291, EPA is required to judge whether an action is "major" and therefore subject to the requirement of a regulatory impact analysis (RIA). The Agency has determined that the SIP processing changes announced today would result in none of the significant adverse economic effects set forth in section 1(b) of the Order as grounds for a finding of "major." The Agency has, therefore, concluded that this action is not a "major" action under Executive Order 12291.

This rule was submitted to OMB for review consistent with section 307(d) of the Clean Air Act. A copy of the draft rule as submitted to OMB, any documents accompanying the draft, any written comment received from other agencies (including OMB), and any written responses to those comments have been included in the docket.

The Regulatory Flexibility Act of 1980, 5 U.S.C. 601-612, requires the identification of potentially adverse impacts of Federal actions upon small business entities. The Act requires the completion of a regulatory flexibility analysis for every action unless the Administrator certifies that the action will not have a significant economic impact on a substantial number of small

entities. For reasons described above, I hereby certify that the final rule will not have a significant impact on a substantial number of small entities.

Date: January 9, 1989.

Lee M. Thomas,

Administrator.

For the reasons set out in the preamble, 40 CFR Part 51 is proposed to be amended as follows:

PART 51—[AMENDED]

1. The authority citation for Part 51 continues to read as follows:

Authority: This rulemaking is promulgated under authority of Sections 101(b)(1), 110, 160–69, 171–178, and 301(a) of the Clean Air Act, 42 U.S.C. 7401(b)(1), 7410, 7420–7429, 7501–7508, and 7601(a).

2. Section 51.103 is proposed to be amended by revising paragraph (a) introductory text to read as follows:

§ 51.103 Submission of plans, preliminary review of plans.

(a) The State makes an official plan submission to EPA when the plan conforms to the requirements of Appendix V to this part, and the State delivers five copies of the plan to the appropriate Regional office, with a letter giving notice of such action. The State must adopt the plan and the Governor or his designee must submit it to EPA as follows:

* * * * *

3. Part 51 is proposed to be amended by adding Appendix V to read as follows:

Appendix V—Criteria for Determining the Completeness of Plan Submissions.

1.0 Purpose

This Appendix V sets forth the minimum criteria for determining whether a State implementation plan submitted for consideration by EPA is an official submission for purpose of review under § 51.103.

1.1 The EPA shall return to the submitting official any plan or revision thereof which fails to meet the criteria set forth in this Appendix V, or otherwise request corrective action, identifying the component(s) absent or insufficient to perform a review of the submitted plan.

1.2 The EPA shall inform the submitting official when a plan submission meets the requirements of this Appendix V, such determination resulting in the plan being an official submission for purposes of § 51.103.

2.0 Criteria

The following shall be included in plan submissions for review by EPA:

2.1. Administrative Materials

(a) A formal letter of submittal from the Governor or his designee, requesting EPA approval of the plan or revision thereof (hereafter "the plan").

(b) Evidence that the State has adopted the plan in the State code or body of regulations; or issued the permit, order, consent agreement (hereafter document) in final form. That evidence shall include the date of adoption or final issuance as well as the effective date of the plan if different from the adoption/issuance date.

(c) Evidence that the State has the necessary legal authority under State law to adopt and implement the plan.

(d) A copy of the actual regulation, or document submitted for approval and incorporation by reference into the plan, including indication of the changes made to the existing approved plan, where applicable. The submittal shall be a copy of the official State regulation/document signed, stamped, dated by the appropriate State official indicating that it is fully enforceable by the State. The effective date of the regulation/document shall, whenever possible, be indicated in the document itself.

(e) Evidence that the State followed all of the procedural requirements of the State's laws and constitution in conducting and completing the adoption/issuance of the plan.

(f) Evidence that public notice was given of the proposed change consistent with procedures approved by EPA, including the date of publication of such notice.

(g) Certification that public hearing(s) were held in accordance with the information provided in the public notice and the State's laws and constitution, if applicable.

(h) Compilation of public comments and the State's response thereto.

2.2 Technical Support

(a) Identification of all regulated pollutants affected by the plan.

(b) Identification of the locations of affected sources including the EPA attainment/nonattainment designation of the locations and the status of the attainment plan for the affected areas(s).

(c) Quantification of the changes in plan allowable emissions from the affected sources; estimates of changes in current actual emissions from affected sources or, where appropriate, quantification of changes in actual emissions from affected sources through calculations of the differences between certain baseline levels and allowable emissions anticipated as a result of the revision.

(d) The State's demonstration that the National Ambient Air Quality Standards prevention of significant deterioration increments, reasonable further progress demonstration, and visibility, are protected if the plan is approved and implemented.

(e) Modeling information required to support the proposed revision, including input data, output data, models used, justification of model selections, ambient monitoring data used, meteorological data used, justification for use of offsite date (where used), modes of models used, assumptions, and other information relevant to the determination of adequacy of the modeling analysis.

(f) Evidence, where necessary, that emission limitations are based on continuous emission reduction technology.

(g) Evidence that the plan contains emission limitations, work practice standards and recordkeeping/reporting requirements, where necessary, to ensure emission levels.

(h) Compliance/enforcement strategies, including how compliance will be determined in practice.

(i) Special economic and technological justifications required by any applicable EPA policies.

2.3. Exceptions

2.3.1. The EPA, for the purposes of expediting the review of the plan, has adopted a procedure referred to as "parallel processing." Parallel processing allows a State to submit the plan prior to actual adoption by the State and provides an opportunity for the State to consider EPA comments prior to submission of a final plan for final review and action. Under these circumstances the plan submitted will not be able to meet all of the requirements of paragraph 2.1 (all requirements of paragraph 2.2 will apply). As a result, the following exceptions apply to plans submitted explicitly for parallel processing:

(a) The letter required by paragraph 2.1(a) shall request that EPA propose approval of the proposed plan by parallel processing.

(b) In lieu of paragraph 2.1(b) the State shall submit a schedule for final adoption or issuance of the plan.

(c) In lieu of paragraph 2.1(d) the plan shall include a copy of the proposed/draft regulation or document.

(d) The requirements of paragraphs 2.1(e)–2.1(h) shall not apply to plans submitted for parallel processing.

2.3.2. The exceptions granted in paragraph 2.3.1 shall apply only to EPA's determination of proposed action and all requirements of paragraph 2.1 shall be met prior to publication of EPA's final determination of plan approvability.

[FR Doc. 89–1001 Filed 1–18–89, 8:45 am]

BILLING CODE 6560–50–M

FEDERAL EMERGENCY MANAGEMENT AGENCY

Federal Insurance Administration

44 CFR Part 67

[Docket No. FEMA–6946]

Proposed Flood Elevation Determinations

AGENCY: Federal Emergency Management Agency.

ACTION: Proposed rule.

SUMMARY: Technical information or comments are solicited on the proposed base (100-year) flood elevations and proposed base flood elevation modifications listed below for selected locations in the nation. These base (100-year) flood elevations are the basis for the floodplain management measures that the community is required to either adopt or show evidence of being already in effect in order to qualify or remain qualified for participation in the

Appendix—Continued

Commission docket No.	Former certificate holder	FERC gas rate schedule No.	Purchaser
CI87-22	do	22	Do.
CI87-23	do	23	Do.
CI87-24	do	24	Do.
CI87-25	do	25	Do.
CI87-26	do	26	Do.
CI87-27	do	27	Do.
CI87-261	do	28	Do.
CI87-261	do	29	Do.
CI87-261	do	30	Do.
CI87-261	do	31	Do.
CI87-261	do	32	Do.
CI87-261	do	33	Do.
CI87-261	do	34	Do.
CI87-261	do	35	Do.

[FR Doc. 89-1218 Filed 1-18-89; 8:45 am]

BILLING CODE 6717-01-M

ENVIRONMENTAL PROTECTION AGENCY

[FRL-3505-6]

State Implementation Plan Processing Reform

AGENCY: Environmental Protection Agency (EPA).

ACTION: Notice of procedural changes.

SUMMARY: This notice describes changes being implemented in the way State implementation plans (SIPs) are processed at EPA. The Act requires States to develop plans for attaining and maintaining the six national ambient air quality standards established by EPA. These SIPs, including all revisions to such plans, are reviewed and approved or disapproved by EPA. This process of State plan preparation, submittal to EPA, and subsequent EPA review has been very time-consuming and resource-intensive. The EPA is concerned that uncertainty and excessive delays in processing SIPs frustrate the development of an optimum State/Federal partnership, cause confusion for sources regarding applicable regulations, and generally dampen initiative in State regulatory programs. Prompted by this concern, the Deputy Administrator called for an assessment by senior officials of the processing of SIPs at EPA. The purpose of the assessment was to identify problems and propose solutions.

The problems identified centered on an excessive concern by EPA for the potential precedent-setting value of individual SIP revisions, manifested by excessive delay in reaching decisions on many SIP actions and in uncertainty on the part of sources and State/local agencies as to the outcome of the SIP review process. The changes being implemented, described in detail below, focus on tailoring EPA review to the significance of the action, and adhering to established procedures for processing SIPs within EPA in order to promptly identify problems with SIP submittals and to generally improve the certainty of the process itself. These changes include, among others: review of SIP submittals for completeness against specific criteria, and requiring prompt modification of incomplete submittals; delegation of SIP decision authority to EPA Regional Administrators for a range of SIP actions which are not nationally significant; and providing for the option to "grandfather" SIP submittals that were prepared in good faith by a State but which may become deficient to some degree because of a change in EPA policy subsequent to State adoption.

EPA believes that these changes will produce a number of important benefits. SIP submittals should be processed more efficiently and review decisions made more quickly and equitably; overall, the quality of SIP submittals should be improved. By working more closely, relations between EPA Regional Offices and State/local agencies will be improved, enhancing the effectiveness of air quality management programs generally. Finally, the changes should result in a more accessible and accountable system, enabling parties outside EPA to determine more easily the status of SIP submittals.

DATES: This action will be effective January 19, 1989. All comments should be submitted to EPA at the address shown below by March 6, 1989.

ADDRESSES: Interested parties may submit written comments in duplicate to Public Docket No. A-88-18 at: Central Docket Section (A-130), South Conference Center, Room 4, U.S. Environmental Protection Agency, Attention: Docket No. A-88-18, 401 M Street, SW., Washington, DC 20460.

Materials relevant to this notice have been placed in Docket No. A-88-18 by EPA and are available for inspection at the above address between 8:00 a.m. and 3:30 p.m., Monday through Friday. The EPA may charge a reasonable fee for copying.

FOR FURTHER INFORMATION CONTACT: Mr. James Wagoner, Office of Air Quality Planning and Standards (MD-11), U. S. Environmental Protection Agency, Research Triangle Park, North Carolina 27711; Telephone (919) 541-5642 or (FTS) 629-5642.

SUPPLEMENTARY INFORMATION:

Background

The 1970 Clean Air Act (CAA) established the air quality management process as a basic philosophy for air pollution control in this country. Under this system, EPA establishes air quality goals (National Ambient Air Quality Standards—NAAQS) for common pollutants. There are now standards for 6 pollutants: ozone (O_3), carbon monoxide (CO), sulfur dioxide (SO_2), nitrogen dioxide, particulate matter (PM_{10}), and lead. States then develop control programs to attain and maintain these NAAQS. These programs are defined by State Implementation Plans (SIPs) which are approved or disapproved formally by EPA and, to the extent they are approved, are legally enforceable by EPA. A SIP must demonstrate attainment and maintenance of the applicable NAAQS, describe a control strategy, contain legally enforceable regulations, include an emission inventory and procedures for the preconstruction review of new pollution sources, outline a program for monitoring, and show adequate

resources for the State to implement the SIP. In addition, there can be many other requirements specific to the pollutant being considered. The consequences of State failure to get SIP approval may be serious, including Federal promulgation of control regulations and sanctions.

Affirmative action is required by EPA on essentially all aspects of every SIP action. Since EPA's final decision comes after a regulation already is adopted and implemented at the State level, excessive delay in the review process often is a major source of friction in EPA's relations with State and local agencies.

There can also be differences of opinion between EPA's Regional Offices and Headquarters. Regions provide guidance and support to States in writing SIPs and then must review them and recommend approval or disapproval. The need for flexibility in dealing with each State and situation is important to the Regions. On the other hand, Headquarters' offices have a major responsibility to ensure basic national consistency on legal, policy, and technical issues. Thus, SIP decisions are under constant pressure because they are visible and quantitative tests of the elusive balance sought between State flexibility and the firmness and consistency provided by national directives.

More than 1600 SIP related actions have been processed from 1983 to the present, averaging almost 300 per year. Many of these involved multiple issues. About 75 percent of the actions fall into three categories: attainment demonstrations, single source actions, and (although technically not SIP revisions) actions involving redesignation of attainment status. Most of the remainder involved new source review actions and emission trades.

A rough assessment has been made of the future SIP load. With the promulgation of a national ambient air quality standard for PM_{10}, and the proposed post-1987 ozone and CO attainment policy, the number of SIP submittals will increase significantly over the next few years. About 100 attainment SIPs and more than 180 "committal" type actions for PM_{10} will have to be reviewed. Shortly thereafter, attainment SIPs for ozone (80–70 areas) and for CO (another 50–60 areas) will be sumitted. Potential revisions to EPA's 1985 stack height regulations resulting from the court decision in *NRDC v. Thomas*, 838 F. 2d 1224 (D.C. Cir. 1988), could require review of SIP emission limits for as many as 200 stationary sources. In addition, it is possible that about 30 Section 111(d) SIPs on control of municipal waste combustors will be developed during this period. The preceding are in addition to the average load of 350 submittals per year.

The Current Review Process at EPA

A comprehensive system has been set up for processing SIPs at EPA, involving full notice and comment rulemaking. The major steps are summarized below.

(1) State prepares the SIP, gets necessary approval under State law, provides justification and documentation, and submits it to the Regional Office for the Governor or his designee. The SIP can range in size from a few to hundreds of pages.

(2) EPA Regions comprehensively evaluate the submittal for policy, legal and technical adequacy, prepare a Technical Support Document (TSD), and prepare a proposed final rule indicating approval or disapproval of the action. The rule is signed by the Regional Administrator, if it is a proposal, and sent on for review by EPA Headquarters. The Headquarters' offices thereupon undertake an evaluation of the Regional Office package, regardless of the significance of the SIP action.

(3) The Office of Air Quality Planning and Standards (OAQPS) in Durham, North Carolina manages the Headquarters' review, coordinating the technical, policy and legal evaluation with all relevant Headquarters offices. These may include the Office of General Counsel and the Office of Policy, Planning and Evaluation, as well as several groups within the Office of Air and Radiation (OAR).

Each group, concurs with comment, or nonconcurs. Negotiation with the Regions over SIP issues or interpretation frequently is a part of Headquarters' review.

(4) Proposals are sent to the Assistant Administrator for Air and Radiation for concurrence. Disapprovals and partial approvals of SIPs must undergo Office of Management and Budget review (under Executive Order 12291) before being sent to the Office of the Federal Register (OFR) for publication.

(5) After review by the Assistant Administrator for OAR, all final actions go to the Administrator for signature and then are sent to the OFR.

SIP processing at EPA has a scheduled goal of 5/2–5/2 for final action. That is, the Region nominally have 5 months to review submittals in both the proposal and promulgation phases. Headquarters nominally has 2 months in each phase. However, SIP actions often take considerably longer than the total 14 months allocated to publish a final decision.[1]

The lengthy decision process has resulted in strong criticism from sources both inside and outside the EPA. In response, the Deputy Administrator commissioned in July, 1987 a senior level task group to assess the problems inherent in the process and to recommend solutions. The task group conducted its assessment and presented recommendations to the Deputy Administrator.[2] The recommendations were approved fully and are described herein. However, before discussing the steps being taken by EPA to reform its SIP processing procedures, it is useful to examine the approach taken by the task group, and the problems uncovered.

The Assessment

The project involved a three-level approach. It included (1) formation of a senior-level task group on SIP Processing which met throughout the four-month project, (2) direct discussions with staff intimately involved in SIP processing, both individually (or in small groups) and at a day-long Headquarters/Regional Office workshop, and (3) interviews with senior executives (Deputy Regional Administrators, Office Directors) now at EPA, and former policy makers with EPA and State air agencies. In addition, a few limited analytical assessments (e.g., historical SIP activity, number and distribution of SIPs currently at EPA) were done to better characterize the issue.

The task group consisted of senior officials from EPA's Regional Offices, Headquarters' groups associated with SIP processing, and State air agencies. The group met three times, first to discuss the general problem to be addressed, agree on a course of action, and assign special short-term projects. The second meeting was primarily concerned with process update and with presentations by Regional Office and State agency representatives to give their unique prespectives on the issues.

---

[1] Note that section 110(a)(2) of the Clean Air Act requires that "The Administrator shall, within four months after the date required for submission of a [SIP], approve, or disapprove such [SIP] for each portion thereof." Under the Agency's present processing workload, such a time limit is literally impossible to meet for all but the most trivial of actions. EPA maintains that this deadline does not apply to SIP revisions, but rather only to the initial SIP, submitted after EPA promulgates a NAAQS. Some courts have supported EPA's position; other courts have held that a 4-month review period applies to a SIP revision.

[2] The report is also referred to as entitled "Final Report of the Task Group on SIP Processing," October 1987. A copy is located in the docket as Item II-B-01.

Finally, at the third meeting, results of analytic studies were presented, and the range of options for improving the process was discussed. These meetings led to the SIP processing changes that are being announced today.

The work of the task group was reinforced by discussions with people directly involved with SIP review in order to get an operations view of the issues. This included a comprehensive one-day workshop attended by approximately 50 EPA staff personnel. This group, intimately familiar with the processing and review of SIP packages, exchanged ideas on both issues and potential solutions during the workshop.

To gain yet another perspective, a series of interviews was conducted with persons currently or recently involved with SIP processing from a broader policy sense. For example, the persons interviewed included a former EPA Deputy Administrator, the former heads of State and local air programs, senior industry officials, several past EPA Assistant Administrators, and four current Deputy Regional Administrators. (The complete list of persons interviewed and their summarized views are contained in an appendix to the task group report.)

Significantly, there was a noticeable degree of consistency among those interviewed both in terms of their perception of major problems and in terms of the general thrust of solutions to be pursued. Almost all believed that EPA is too cautious in making SIP decisions, that SIPs vary widely in importance and EPA should tailor its review accordingly, and that the current SIP review system is operated too informally. They also believed that the "moving target" problem (a change in the technical or policy basis for EPA decisions after a SIP has been submitted) needed to be addressed.

Problems Identified

It is clear that the process of reviewing and judging SIPs has been a constant struggle for EPA and the States and is a source of increasing tension. Concerns voiced by participants during the assessment indicated problems at each level of SIP preparation and review. Some cited abuse of the system by the States to relax source limits. Others believed EPA was too inflexible and overzealous, resulting in major processing delays for minor benefits.

It is likely that present problems, if left unattended, will become worse because of continuing resource constraints and plans that call for significant increases in SIP activity over the next few years, particularly in the complex areas of ozone, CO, and PM_{10}. In a relatively recent development, some enforcement actions have been affected by courts which have ruled that EPA cannot enforce the current federally approved SIP against a source for violations occurring more than four months after a SIP revision affecting the source has been submitted to EPA, unless EPA has finally acted on the submittal.

As a result of the discussions and projects described earlier, it was possible to identify a number of fundamental problems that appear to be associated with SIP processing. Some of these problems are concerned primarily with the procedural aspects of SIP review, while others relate more to the underlying philosophy of the SIP review process (i.e., what is the process supposed to accomplish), and the attitudes of the SIP reviewers. For example, there is within EPA a strong concern for consistency in SIP decisions, and a fear that each decision may have important consequences in terms of establishing national precedent. However, such concern may be appropriate for only a small percentage of actions reviewed. Moreover, it appears that the SIP process has been depended upon as a vehicle to identify, resolve, and articulate national policy issues, often at the expense of timely decision making.

The issues identified fall into three basic categories: inordinate concern for the consequences of individual decisions; excessive EPA review, including full review for minor or clearly deficient actions; and uncertainty concerning the outcome of review. These problem categories are discussed briefly below.

A. Inordinate Concern for Individual Actions

As noted, the current process places a premium on consistency, stemming in large part from a fear that a decision statement or explanation concerning a specific State or source may force similar decisions in other States for similar sources. Although there is a need for consistency at some level (e.g., concerning the basic components of an ozone attainment program or a new PM_{10} SIP), it may not be necessary for the results of all decisions to be similar State to State and source to source. It must be remembered that SIPs are intended to be tailored by the States to their specific air quality problems, and the mix of sources from which emissions reductions can be obtained, within the constraints of the Clean Air Act (such as the requirement for reasonably available control technology in nonattainment areas). Although it is important for policy and broad technical requirements to be applied consistently, it is not necessary that the result of their application to localized problems turn out the same.

Because of the emphasis on consistency and the fear of setting precedent with individual decisions, SIP reviewers have been reluctant to risk making mistakes on any SIP change; this, considering the number of actions EPA must review, inhibits rapid review and decision making. There needs to be a greater willingness on the part of all concerned with the process to risk an occasional noncritical mistake in return for more rapid processing and earlier identification of the outcome of the review.

B. Excessive Review

Some SIP packages deserve the full attention of EPA staff and management: as noted, certainly the basic State programs for post-1987 ozone attainment and programs to achieve the newly promulgated PM_{10} ambient air quality standard will need such review. Similarly, SIP revisions for new programs that dictate consistent national implementation, or that involve complex and evolving policy issues, such as generic bubble regulations, should receive review and sign-off by EPA Headquarters. But the same cannot be said for changes to an emission limit on a local printing plant, composition of State boards, or negative declarations under section 111(d). Under EPA's current approach to SIP review, all changes receive Regional Office and Headquarters' review prior to both proposal and final approval (except for those SIPs, aobut 20 percent of the total, processed as direct final [1]). All final actions, no matter how trivial, currently are signed by the Administrator.

There are several problems with this multiple review for all actions: it inherently takes longer than processing only at the Regional Office level; it ties up the scarce Headquarters' resources available for SIP review (thus making a long process even longer); and by introducing more reviewers into the process, it increases the chance of rejection for procedural or other reasons which have no impact on air quality.

There are other aspects to the excessive review problem. If a State

[1] Under this procedure, EPA publishes a single Federal Register notice which indicates that the SIP action will be final in 60 days unless an interested party requests the opportunity to provide adverse comment. If a party does seek to provide adverse comment, EPA then follows the normal SIP processing procedure of notice of proposal and subsequent final rulemaking.

submits a SIP change without properly stated emission limits, legal authority or compliance schedules, or which contains other obvious deficiencies, it can enter the system and be subject to complete EPA review and disapproval. EPA's procedures did not provide in any comprehensive way for immediate rejections for incompleteness. Independently, however, some Regional Offices have tried to deal with this problem. For example, Region I has developed a set of completeness criteria their States must follow; Region VII provides States with an extensive checklist describing the information the Region will look for in a wide range of SIP actions. The purpose is to keep incomplete packages out of the more extensive review system.

On the other hand, even if the submittal is prepared correctly, some actions seem unsuited for full review. Examples include simple recodification of regulations, address changes, or changing modeling or stack test methods to conform to revised EPA guidelines. In such actions, the State is doing exactly what is required and appropriate. Although such changes can be processed as direct final, even that is probably more resource intensive than they are worth. However, there is presently no better way to treat such changes administratively, or keep them out of the system entirely.

Finally, several members of the Task Group believed that, in addition to being concerned with SIP processing, EPA should also examine the SIP process in a more basic way. Specifically, there was debate and interest expressed by some in promoting direct acceptance of operating permits or other State single source emission limits. This would be conditioned on EPA approval of the State's overall framework and strategy for achieving an ambient air quality standard. EPA's continuing role would be to track a State's overall progress and periodically audit the State's implementation of the permit process, taking corrective action as necessary. Some initial steps are being taken in this direction. For example, in response to the "federal enforceability" issue contained in the Chemical Manufacturers Association (CMA) consent agreement concerning challenges to EPA's new source review regulations, EPA is considering the possibility of allowing State operating permits to be deemed federally enforceable in certain circumstances provided that the State's operating permits program has been incorporated into the SIP and approved by EPA. However, full implementation of a system involving direct acceptance of State permits or other limits requires much conceptual discussion concerning State/EPA regulations and fundamental changes to other parts of the national air program, and may require changes to the Clean Air Act.

C. Uncertainty Concerning the Outcome of the Process

It might be expected that processing a revision to a SIP, given the EPA's years of experience, would be a fairly routine process. However, that often is not the case. The fate of a given SIP revision, in terms of both the nature and timing of the ultimate decision, can be uncertain for a number of reasons. Important information necessary for decision making may be left out of a SIP package, or the format and justification for the change may be deficient. This can result not only from inexperience and lack of training at the State and local level, but also from a lack of clear policy guidance from EPA and timely issue resolution. Policies important to SIP preparation and approval may be unstated or poorly documented. In some cases, there may be no policy at all to address a specific SIP issue, and the SIP process itself, through the aggregation of a series of similar actions, is used to evolve a policy. This situation, in part, derives from sporadic management involvement in the SIP process. Constant attention is needed to assure that packages are moved through the system, that problems are promptly identified, and that policy issues are discussed and resolved.

An overt manifestation of uncertainty in the outcome of SIP review is the moving target syndrome. Under current practice, a SIP may be under review at EPA for months and eventually be deemed inappropriate because it doesn't conform to a newly evolved policy, even though it conformed to the policy in place when it was submitted. This not only frustrates the State but results in confusion for the source because until the State actually changes its submittal, it often continues to implement the regulations disapproved by EPA.

Another factor contributing to uncertainty and delay is the reliance on informal communication in processing SIPs. The system traditionally has been characterized by numerous, not judgmental, interactions. Headquarters and Regional Office personnel are reluctant to formally reject packages, but rather try to work with their colleagues in the processing chain by phone calls and often protracted negotiation. This stems in part from reluctance to compromise others that may have acted in good faith. Also, the documentation needed to support a more formal process on a large number of SIP actions can become an excessive burden. Unfortunately, in many cases the informal process prolongs the review time substantially and results in poor documentation for use in similar situations. In addition, the informal process frequently is criticized by States and sources because they can't adequately track the progress of the change once it gets into EPA review.

Solutions Devised

Based on the task group assessment and the problems identified, EPA has devised a number of changes to the SIP processing system which it will begin implementing today. The changes are designed to tailor SIP review to the significance of the action involved, and to improve the certainty of the SIP review process. The changes, including the legal rationale supporting them, are described briefly below and in depth in the next section of this notice.

A. Tailor Review to Significance of Action

EPA has devised a SIP review system under which increasingly intense review procedures will be applied to increasingly significant actions. Minor actions will undergo relatively little review while major actions will continue to receive full Regional Office and Headquarters review. By tailoring the intensity of review to the significance of the action, this hierarchy of procedures will generally decrease SIP processing times by dramatically shortening review periods for minor SIPs and freeing EPA resources to enable major SIP processing to proceed without existing delays.

1. Completeness Criteria

EPA found that many SIP revision submittals were processed through full EPA review despite the fact that they were missing major components which effectively prevented EPA approval. For example, a State might submit an emission limitation without compliance testing procedures. To free EPA resources that would otherwise be consumed processing such deficient SIPs, EPA has created a completeness review process which is being proposed for public comment in an accompanying notice in today's Federal Register. Under this process, a SIP will be reviewed for completeness against certain basic criteria when it is initially submitted to determine if all the necessary components have been included to allow proper review and an ultimate decision on the substance of the SIP

revision. This will be a quick process that will look at the reviewability of an SIP submittal, not its approvability. EPA will then promptly inform the submitting State by letter whether EPA will proceed to process the SIP revision or whether it must be returned to the State because it is incomplete.

EPA is creating this completeness review process under the authority of Section 301 of the Clean Air Act which authorizes the Administrator to prescribe such regulations as are necessary to carry out his functions under the Act. EPA is interpreting the terms "plan" in section 110(a) (1) and (2) and "revision" in section 110(a)(3) to be only those plans and revisions that contain all of the components necessary to allow EPA to adequately review and take action on such plan or revision. EPA believes that Congress would not have intended to require EPA to review and take action on SIP submittals that were simply not reviewable because they were lacking important components. Therefore, the Administrator concludes that section 110(a) requires him to act only on complete State submittals.

EPA recently issued a guidance memorandum to the Regional Offices establishing this completeness review procedure, including a list of completeness criteria, on an interim basis pending notice and comment rulemaking. *See* Memorandum, Gerald A. Emison, Director, Office of Air Quality Planning and Standards, to Regional Office Air Division Directors, March 16, 1988 (a copy is included in the docket as item II–B–4). The Regional Offices are currently using this guidance to conduct completeness reviews. However, elsewhere in today's Federal Register, EPA is proposing to codify these criteria in regulatory form to provide clear benchmarks for States in preparing complete SIP submittals. Specifically, EPA proposes to add the completeness criteria to 40 CFR Part 51 as Appendix V. EPA also proposes to amend § 51.103(a) to specify that State submissions will not be considered official SIP suibmissions upon which EPA is required to act under section 110(a) unless they meet the requirements of Appendix V. The details of the completeness criteria are described fully in the accompanying notice.

2. Letter Notice

EPA is creating a new SIP processing procedure for relatively insignificant SIP revisions that the EPA believes are of essentially no interest to the general public. Historically EPA has processed all SIP revisions through full notice and comment rulemaking in the Federal Register. For insignificant actions of no public interest, this has been costly and time consuming with no apparent benefit. Under the new letter notice procedure for such insignificant revisions, EPA will simply inform the State and directly affected parties by letter that the submitted SIP revision has been approved. The EPA may not publish a notice of proposed rulemaking and opportunity for public comment or an individual notice of final rulemaking in the Federal Register.

EPA's duties to publish proposed and final rulemaking notices and provide opportunity for public comment stem from the Administrative Procedures Act (APA). However, the APA specifically provides that an agency need not provide notice of proposed rulemaking or opportunity for public comment when the agency for good cause finds that it is impracticable, unnecessary, or contrary to the public interst. *See* 5 U.S.C. section 553(b). EPA concludes that it is unnecessary to provide for comment on insignificant SIP revisions because they are of no interest to the general public. Further, in such cases, the delays associated with providing for comment where none would be forthcoming would be contrary to the public interest in expediting SIP processing.

The legislative history of section 553 indicates that the good cause exemption from notice and comment requirements appropriately applies to insignificant SIP revisions. See Senate Comm. on the Judiciary, Administrative Procedure Act: Legislative History, S. Doc. No. 248, 78th Cong., 2d Sess. 200 (1946) ("Unnecessary" means unnecessary so far as the public is concerned, as would be the case if a minor or merely technical amendment in which the public is not particularly interested were involved. "Public interest" supplements the terms "impracticable" or "unnecessary"; it requires that public rulemaking procedures shall not prevent an agency from operating and that, on the other hand, lack of public interest in rulemaking warrants an agency to dispense with public procedure). A number of courts have also held that notice and comment procedures are not required in analagous circumstances. *See, e.g., National Nutritional Foods Association v. Kennedy*, 572 F.2d 377, 385 (2d Cir. 1978); *Texaco, Inc. v. FPC*, 412 F.2d 740, 743 (3d Cir. 1979); *United States v. U.S. Trucking Co.*, 317 F. Supp. 69, 71 (S.D.N.Y. 1970).

Although EPA will not seek comment on letter notice actions or publish individual notices of final rulemaking, in order to keep the general public informed of all SIP actions EPA will publish periodically in the Federal Register a summary list of all actions taken under the letter notice procedure. The effective date of all letter notice actions will, however, be the date of the letter itself rather than that of the subsequent summary Federal Register notice.

EPA will only use the letter notice procedure for insignificant SIP actions such as recodifications or minor technical amendments that EPA feels confident are of no interest to the general public. Further discussion of the SIP categories to be processed under letter notice can be found below in the implementation section of this notice.

3. Increased Use of Direct Final

For some time EPA has used a SIP processing procedure referred to as direct final rulemaking. In the past, EPA has generally used this procedure mostly for insignificant actions that it considered noncontroversial and on which EPA did not anticipate receiving any adverse comment. EPA is now expanding the use of this historically effective direct final procedure to speed processing for a wider range of such minor SIP actions.

Under the direct final procedure EPA still continues to offer the opportunity for public comment as required by the APA. As before, the procedure merely provides a shortcut for final action where no comment is expected. Moreover, those insignificant SIP actions which are truly of no interest to the public will now be processed under the letter notice procedure described immediately above. Further discussion of the potential categories of SIPs to be processed under the expanded use of direct final procedures is included below in the implementation section.

4. SIP Decision Authority

Historically, all SIP revision actions have been thoroughly reviewed at both the Regional Offices and Headquarters, whether or not the action involved was truly of national significance. This has led to the greatest delays in the SIP processing system, and the task group assessment indicated that overall such duplicative review did not appear to contribute substantially to improved SIP content in many cases. The EPA has concluded that all SIP actions that are not nationally significant, and for which Headquarters has prepared guidance for SIP processing, will now be reviewed only at the Regional Offices. Consequently, the Administrator is delegating his authority under section 110(a) of the Clean Air Act to act on such SIP submittals to the Regional

Administrators. Both proposed and final Federal Register notices for these actions will henceforth be signed by the Regional Administrators.

Section 301(a)(1) of the Act authorizes the Administrator to delegate any of his powers and duties under the Act to other EPA employees except "the making of regulations." In an early interpretation of this statutory provision EPA concluded that, while proposed SIP rulemaking did not constitute "the making of regulations", any final action on a SIP would fall within this prohibition. Upon further reflection, EPA now concludes that the prohibition on delegation applies only to regulations initially promulgated by EPA, not to plans prepared by States that EPA merely approves or disapproves.

The natural reading of the statutory phrase "the making of regulations" extends only to regulations that the Administrator himself promulgates. Although in approving a SIP revision the Administrator does incorporate State promulgated regulations into the federally enforceable SIP, he still cannot properly be said to be "making" regulations within the meaning of the section 301(a) prohibition on delegation. As a practical matter, EPA has acquiesced in those judicial decisions holding that EPA must follow the rulemaking procedures of the Administrative Procedures Act (APA), 5 U.S.C. 553, when it approves or disapproves State implementation plans. However, even if SIP review is "rulemaking" under the APA, EPA believes these actions do not constitute "the making of regulations * * *" Thus, while section 301(a)(1) of the Clean Air Act prohibits the Administrator from delegating his authority to make federal regulations, it does not prohibit delegation of his authority to act upon regulations made at the State level.

The implementation section of this notice contains a detailed listing of those categories of SIP actions that the Administrator currently is delegating to the Regional Administrators, those categories the Administrator is delegating but which should still receive some input from Headquarters at this time, and those categories that will continue to receive full Headquarters review for the time being. These categories may change over time as Headquarters prepares additional guidance and Regional Offices become more familiar with new issues.

B. Improve Certainty of Process

The second major focus of EPA's changes in the SIP processing system is to improve processing procedures so that individual actions can be handled with greater certainty. These changes involve increased management control and clarified processing guidelines.

1. Adherence to Formal Procedures

EPA has for some time had detailed procedures for processing SIPs through the existing SIP review system. These procedures include time schedules, default provisions, and issue resolution mechanisms. However, for a number of reasons these procedures have often not been followed precisely in the past. With the adoption of the processing reforms described herein, EPA will be revising its procedures to establish guidelines for each type of SIP review mechanism. When the new guidelines are issued, senior management will make clear that in the future they are to be adhered to more rigorously. This will ensure that State submittals move quickly through EPA's review process, with any major issues being raised promptly for resolution.

2. Grandfathering Policy

In the past, a number of States have submitted SIP revisions that were consistent with EPA requirements (regulations, policies, legal interpretations, etc.) in effect at the time of State adoption of the revision. However, in some cases, because of processing delays and policy evolution, the applicable requirements would change before the revisions received EPA approval. The EPA's past procedure was to return the plan to the State for revision or disapprove the action. Not only did this add more time to an already lengthy process, it also strained EPA/State/local agency relations. Moreover, there was the basic question of fairness involved. In such cases, the State submitted the revision in good faith and in accordance with the rules and policies in effect at the time of submission, only to see months go by and find out the change was rejected due to factors totally beyond its control.

EPA has determined that in general it would better serve the States and the interests of the SIP processing system to continue to process most State submittals based on the requirements in effect at the time the State adopted the change to the SIP. To this end, EPA recently issued guidance on grandfathering entitled "Grandfathering of Requirements for Pending SIP Revisions", sent from Gerald Emison, Director, OAQPS, to EPA Regional Office Air Division Directors, June 27, 1988 (a copy is included in the docket as Item II–B–5).

The guidance provides a structure for grandfathering pending SIP actions to the extent allowed by law. The law in this area indicates that whenever a new requirement is created by Congress (via statute) or by EPA (via regulation or policy), it becomes generally applicable unless the authority establishing the requirement provides otherwise. When Congress enacts a new statute, it applies to all matters then pending before an agency unless Congress specifically provides otherwise in the statute. The EPA has no authority to grandfather any matter from the new statutory requirements without explicit provisions in the statute.

When EPA issues new regulations, they are also generally applicable unless the regulations themselves include grandfathering provisions. If grandfathering provisions are not explicit in the regulations, courts will apply the new rules to matters pending before EPA. *Thorpe* v. *Housing Authority of Durham*, 393 U.S. 268 (1969). However, an agency does have some flexibility to provide grandfathering provisions in new regulations. Such provisions are usually appropriate where they meet a four-part test. First, the new rule represents an abrupt departure from well-established practice. Second, affected parties have relied on the old rule. Third, the new rules impose a large burden on those affected. Fourth, there is no strong statutory interest in applying the new rule generally. *Sierra Club* v. *EPA*, 719 F.2d 436 (D.C. Cir 1982), cert. den. 468 U.S. 1204 (1984). In the past, EPA has included explicit grandfathering provisions in new regulations where appropriate.

An agency has broad authority to decide how and when to issue new guidance, since as a purely legal matter guidance is not absolutely binding on subsequent proceedings. *Pacific Gas and Electric Co. v. FPC*, 506 F.2d 33 (D.C. Cir. 1974). Historically, however, EPA has provided only limited grandfathering from significant guidance primarily due to the importance of the new guidance to EPA's control programs.

EPA's expanded grandfathering guidance states that complete pending SIP actions generally should be subject only to the requirements in effect at the time the State submittal was prepared. However, the guidance includes a number of exceptions to the general rule. The EPA would not grandfather a pending action where a court ruling has changed a requirement, where a court has convinced EPA that a requirement is no longer supportable, where the Administrator determines that

grandfathering is not appropriate, where an imminent and substantial adverse environmental impact would result, where grandfathering would foreclose EPA's ability to exercise its authority under the Clean Air Act, or where the State has not acted in good faith in submitting a plan.

The guidance also states the EPA will analyze the need for grandfathering provisions in all new EPA requirements, and will include such provisions in all cases to the extent appropriate.

3. Improved Guidance and Communication

In order to facilitate implementation of the various SIP processing changes EPA is instituting, existing guidance will be upgraded and new guidance prepared wherever needed. Headquarters offices have committed to provide adequate guidance to Regional Offices and to be available for consultation to assist the Regions in implementing the new programs.

EPA will also be improving communications between Headquarters and Regional Offices, and among different Regional Offices, to effectively implement the decentralized SIP processing system. Improved communication techniques, described in the implementation section, include identifying regional SIP contacts, the "regional staff expert" concept, a SIP clearinghouse, a computerized tracking system, periodic conference calls, and national meetings.

4. SIP Processing Management System

The final change EPA is instituting in the SIP processing system is a new SIP processing management system. Under this system EPA managers will maintain close supervision over the SIP processing system to ensure that SIPs move smoothly through the new procedures. The new management system, described in full in the final section of today's notice, includes both an internal and external audit system, an expanded computerized tracking system, and a SIP processing deviation review system.

Implementation of the Changes

The following discussion focuses on the more significant aspects of the implementation of the SIP processing changes announced today; the final portion addresses improvements in the management system which are being instituted to assure the announced changes are properly implemented.

A. Tailor Review to Significance of Action

1. Completeness Criteria

Screening criteria have been developed that define the essential elements of an acceptable SIP package, that will avoid obvious inadequacies, and that can be applied uniformly with limited subjective judgment and review. The criteria were developed by EPA Regional Offices already using a list of criteria to determine completeness of SIP packages in an informal way. The benefits of using completeness criteria to reject deficient packages include improved consistency and quality in the State submittals received for processing, fewer SIPs disapproved for fundamental inadequacies, more effective use of limited resources at both the Federal and State level, and improved guidelines for new State personnel on how to prepare adequate SIPs. As noted earlier, an interim policy for determining completeness of SIP submittals was issued to the EPA Regional Offices. The policy includes basic criteria for determining completeness, and sample letters for accepting and rejecting SIP submittals.

In a separate notice in today's Federal Register, the Administrator is proposing to add these criteria and procedure for determining the completeness of State submittals to 40 CFR Part 51. EPA will continue to use the interim policy to assess SIP submittals until final rulemaking action is taken on today's accompanying proposal.

The criteria for determining whether a submittal by the State is complete have been separated into two categories: (a) Administrative information and (b) technical support information. Administrative information includes the documentation necessary to demonstrate that the basic administrative procedures have been adhered to by the State during the adoption process. Technical support information includes the documentation that adequately identifies the technical components of the plan submission.

2. Letter Notice

Using a letter notice for non-substantial actions, which EPA will begin doing after today, is a new process where EPA will merely inform a State and directly affected parties by letter that EPA has approved a given SIP revision. The objective of the letter notice approach is to achieve prompt action by EPA on non-substantial actions where the public interest is not served by full notice and comment processing. By using letter notices, EPA's limited resources can be allocated to the expeditious processing of more significant SIP actions.

Under letter notice, as soon as a revision has been deemed approvable, the Regional Administrator or his designee will send a letter to the State and affected parties, informing them of the approval. The EPA may not publish a notice of proposal and provide an opportunity for public comment beyond that already provided for by the State. In order to keep the public informed of these actions, EPA will publish periodically (annually at a minimum) in the Federal Register a summary list of all letter notice actions recently taken, with information concerning the change and the sources affected, as appropriate. These actions will be effective from the date of the letter notice, rather than the eventual summary publication date. The Regional Offices will make the decision whether to process a SIP revision as a letter notice.

EPA intends to use discretion in the application of letter notice processing to insignificant SIP revisions. The following are examples of such revisions. Frequently, States/local agencies will recodify existing regulations into a new structure or to improve the understanding of the program. These changes are superficial from the perspective of the air quality management program and are of little interest to the general public. Other revisions to implementation plans incorporate amended or revised national guidance documents pursuant to EPA directives and are made merely to conform to revised requirements. In other cases, many States have programs using renewable operating permits for the purpose of source regulation. Usually, the permit is renewed without change and the permit action is of little public interest.

Technical amendments, administrative actions, and minor wording changes are further examples of SIP revisions that are suitable for processing by letter notice. It is expected that the list of SIP revisions that can be processed by letter notice will be expanded as experience is gained with the process. EPA specifically requests comment on the appropriateness of using letter notice processing for these and other potential categories.

3. Increased Use of Direct Final

On June 23, 1982 (47 FR 27073), EPA announced procedures to shorten and streamline the SIP review process. One of these procedures was the direct final rulemaking approach. This program has been shown to reduce the SIP processing

review time by about 80 percent. Since its inception, many revisions have been published as direct final rules with very few receiving notice from the public of the desire to comment. The following are some types of SIPs that have been processed successfully as direct finals:

- Amendments to definitions to conform to EPA requirements
- Changes in monitoring/modeling procedures to reference new EPA guidelines
- Revisions to incorporate new test methods by reference
- Single source SIP revisions that make a State's requirements more stringent
- Public availability of emissions data
- Permit fees
- Compliance schedules for section 111(D) plans
- Visibility plans
- Volatile organic compound (VOC) consent orders
- Prevention of significant deterioration (PSD) modeling regulations
- Minor changes to inspection and maintenance (I/M) programs
- New opacity regulations
- Variances
- Operating permits for lead SIPs.

Of 134 SIP revisions processed most recently as direct finals, only two required republishing as proposed rules because of public comment. This history of very little public comment on direct final rules suggested that EPA could use this effective tool more often to speed up the SIP process.

For this reason, EPA issued a memorandum dated December 23, 1987 entitled "Expanded Use of Direct Final SIP Processing," from Gerald A. Emison, Director, OAQPS, to EPA's Regional Offices (a copy is included in the docket as item II–B–2). For the reasons stated above, this memorandum recommended that the direct final rulemaking approach could be used more frequently by the Regional Offices. It is possible that EPA's plan to expand the application of the direct final rulemaking approach may result in an increase in the number of SIPs being withdrawn and subjected to full notice and comment rulemaking because of the desire by the public to comment. However, any increase in the number of direct final actions withdrawn and converted to proposals should be more than offset by the overall improvement in timely processing of total SIP actions.

4. SIP Decision Authority

A cornerstone of the recommendations of the SIP processing task group is the tailoring of review to the significance of the change. To this end, the Administrator is today delegating signature authority for those SIP revisions that are not of national significance to the EPA Regional Administrators.

Eliminating the serial review by the Regional and Headquarters offices for selected categories of SIPs is potentially the most effective recommendation made by the task group. This recommendation is designed to delegate approval/disapproval authority for the majority of SIPs to the Regional Administrators. As noted earlier, all SIP revisions have received both Regional Office and Headquarters review in the past. The Regional Office would review the State submittal and prepare a recommendation to Headquarters either approving or disapproving a rulemaking action. The implementation plan revision would then be forwarded to EPA Headquarters for another round of technical, legal, and policy review. Except for those SIPs processed as direct final rules, all proposed and final rules receive the full Regional Office and Headquarters review. Historically, the second level Headquarters review rarely changed the final recommendation of the Regional Office, although it often contributed to the legal and technical rationale for an action.

Certain plan revisions clearly can have a significant impact on the implementation of national programs, such as basic strategies for demonstrating attainment with ambient standards. In addition, there are programs where a high level of national consistency is important, or which involve emerging programs where major issues on program implementation may as yet be unresolved. Such actions should receive both a Regional Office and a Headquarters review; the latter will ensure consistent policy application for these nationally significant SIPs. SIP actions which initially will continue to be decided by the Administrator are listed in Table 1. This list and the other lists described below are not intended to be permanent—that is, SIP categories may be shifted among them over time. For example, it is EPA's intention to delegate some of the SIP categories on Table 1 to the Regional Administrators as experience with the new process is gained and policies mature. Conversely, if the Regional Offices have difficulty with a delegated category, such SIP actions may be withdrawn from delegation and be subject to full Headquarters review.

TABLE 1

The following SIP actions must undergo full Regional Office and Headquarters review, with decision and signoff by the Administrator (proposed and final):

- O_3 redesignations and O_3 attainment plans (including I&M programs)
- CO attainment plans dealing with area-wide problems
- CO redesignations except those relating to point-source only problems or hot spots
- Group I PM_{10} plans (attainment demonstrations) including those resulting from committal SIPs
- New area-wide VOC regulations (e.g., per CTG requirements, or Post-87 requirements)
- VOC revisions with long-term averaging (i.e., greater than 24-hour)
- SO_2 revisions involving (a) unresolved national issues (e.g., stack height issues; statistical attainment demonstrations, expected exceedances methodologies) or more than one Regional Office; (b) international issues.
- SIP revisions proposing or revising State-developed air quality dispersion model guidelines, and SIP revisions based on the use of non-approved models or deviations from EPA's modeling guidance.
- SIP revisions where EPA is under a court-ordered schedule (e.g., Indiana SO_2 SIP)
- SO_2 Statewide plans (all elements)
- SIPs for new generic State-wide programs (e.g., bubbles, PSD/NSR)
- PSD/NSR SIPs submitted to comply with Post-87 O_3/CO policy
- PSD/NSR SIPs for PM_{10} group I areas
- PSD/NSR SIPs submitted to comply with Alabama Power decisions
- Bubbles which trade off growth allowances
- Visibility plans that address existing impairment
- Any FIP
- Any action proposing or imposing a sanction
- Any SIP revision, approval/disapproval of which would significantly deviate from national policy

A second category of SIP revisions, listed in Table 2, are actions where some Headquarters review is deemed appropriate prior to final action. This category was developed to address those SIPs where guidance is relatively new and thus it is prudent for Headquarters to monitor the decision process at the Regional Office level. This category serves as a transition between Headquarters review and Regional Office review and will provide an opportunity for Headquarters oversight without adding a significant review requirement. Although the Regional Administrators will have decision authority for these SIPs, the Headquarters offices will have 30 days from the date the SIP revision package (including the draft Federal Register notice and support material) is received at Headquarters, to prepare and send comments to the Regional Office. This review is not intended to be a veto authority by Headquarters but rather to provide Headquarters reviewers an

opportunity to provide comments to Regional Office decisionmakers.

TABLE 2

The following SIP actions are delegated for Regional Administrator decision and signoff (proposed and final) but require a 30-day opportunity for Headquarters' review before signoff.

- Particulate matter emissions relaxations
- VOC revisions with extended compliance schedules affecting nonattainment areas
- CO attainment plans dealing with hotspots
- CO redesignations relating to point-source only problems and hot spots
- SO_2 area-wide and source-specific SIP revisions and redesignations, where the source(s) or background sources in the aggregate have allowable emissions of 25,000 TPY or more (except primary nonferrous smelters or emission trading)
- *SO_2 revisions with (a) averaging times greater than the short-term SO_2-NAAQS; (b) revised emission limits due to changes in stack height credits*
- Visibility SIPs involving regional haze
- Direct final rulemaking in categories identified for Administrator signoff (see *Table 1*)
- Any other action not listed elsewhere

Decision authority for all remaining SIPs is being delegated to the Regional Administrators, with no requirement for consultation with Headquarters prior to signoff. The primary criterion used to judge which SIPs could be delegated to the Regional Administrator for decision was the significance of the action. Another criterion was the availability of appropriate policy memoranda/guidance to the Regions for making decisions on the approvability of a SIP. The categories of SIPs initially to be delegated to the Regional Administrator for final approval authority are listed in Table 3. Although these revisions are being delegated for the Regional Administrator's signature, the Headquarters SIP reviewers will be available for discussions with the Regional Offices on any of the categories of SIP revisions. The Regional Offices also have the option of sending SIP submissions which come under any of these categories to Headquarters for the full review, especially where the Regional Office reviews indicate that national issues may be of concern.

TABLE 3

The following SIP actions are delegated for Regional Administrator decision and signoff (proposed and final). Headquarters review is not required but may be requested by the Regional Office.

- All other bubbles and all other single-source regs.
- VOC extended compliance schedules (except those affecting nonattainment areas)
- PM_{10} Group II and III SIPs TSP redesignations
- Lead attainment plans and revisions
- All other SO_2 SIPs, including redesignations; ambient monitoring plans; malfunction rules; State AAQS
- State stack height regulations and negative declarations
- All other PSD/NSR SIPs
- All other visibility plans
- 111(d) plans/negative declarations
- All other direct final rulemaking
- All letter notice actions

SIP issues (and revisions) in categories of potential national significance will continue to be reviewed in Headquarters and signed by the Administrator. The categories of SIPs delegated to the Regional Administrator for decision and sign-off are inherently localized in scope and do not have potential for national impact. (Obviously, an unusual SIP revision in a delegated category could involve broad issues; the changes in procedure announced today provide for full consultation between the Regional Office and Headquarters, and even for the forwarding of such an unusual action for full Headquarters review.) Thus, except for unusual cases, decisions made by a Regional Administrator will be based on local factors, reflect local issues, and may indeed yield varying results, although Regional Offices will apply policies consistently. Such decisions are, therefore, intended to be non-transferable, i.e., do not set precedents for other Regions. For example, an emission limit for a particulate matter source in a State may require a specific value to conform to the State's demonstration of attainment. The same type of plant in another State, however, might have a different limit imposed based on its location and site-specific factors. In short, it is expected that the outcome of the decision process for similar SIP actions can vary from Region to Region. Each such local action must be judged on its own merits. This is acceptable, provided that national policy and guidance applicable to such actions are applied consistently by all Regions involved.

To provide the Regional Office with the necessary support, EPA is completing a comprehensive compilation of policy statements, guidance, and memoranda applicable to those actions where significant Headquarters review is being eliminated. Moreover, to maintain oversight of this decentralized process, EPA will institute more intensive management systems, designed to ensure national consistency in policy application (see discussion on Management Systems later in this notice).

B. Improve Certainty of the Process

1. Adherence of Formal Procedures

Detailed procedures exist for processing and reviewing SIP revisions. Among other things, the procedures provide for firm schedules, default provisions, and mechanisms for issue resolution. The procedures frequently are not following for a variety of reasons. In some cases, a Regional Office may believe that infomally working/negotiating with the State would provide information or result in changes to the submission that would enable EPA to approve the plan revisions. This can occur because there is an inherent reluctance by reviewers to disapprove a plan into which a State or local agency has put considerable effort. The goal of this informal approach was to enhance the relationship with the State, although the ultimate effect may have been the opposite.

The current guidance and procedures for SIP processing are being reviewed, modified as necessary to stress the need for more formal implementation, and will be republished with a clear senior management directive on their importance. Further, the management system decribed below will help ensure that the reviewing offices follow the formal procedures. This, along with increased management attention to the SIP process, should enable those interested in the results of the SIP review process, internally and externally to EPA, to follow more effectively the progress of individual actions.

2. Grandfathering Guidance

EPA issued grandfathering guidance to the Regional Offices as described earlier. The guidance is to be considered in each rulemaking action on a SIP revision and in all new or revised requirements for SIP's issued by EPA. EPA believes that it deals with the fairness issue, will not have noticeable environmental impact and will strengthen EPA's working relationships with the States and local agencies. Under the guidance, a SIP revision may remain subject to the requirements in effect generally on the date of State adoption of the change. The decision to grandfather will be made by either the Administrator or the appropriate Regional Administrator where decision authority has been delegated.

All SIP revisions potentially subject to grandfathering will be reviewed to determine to what extent the submission complies with the new and revised requirements. For such revisions, EPA

will address the impact of the grandfathering decision (positive or negative) in the SIP rulemaking action. In addition, the basis for grandfathering future submittals will be described in all new requirements issued by EPA, addressing the impact on previously approved, pending, and newly submitted SIPs. Such grandfathering provisions generally will have effective dates which are 60 days from the date of signature to allow states to have a reasonable time to complete processing and submit revisions to EPA that may be subject to grandfathering.

Although grandfathering will be considered whenever possible, balancing equity considerations and short-term environmental impacts, it is not automatic and may not be appropriate in all circumstances. These include situations where:

1. The State has not acted in good faith in submitting a plan;
2. A court ruling has changed a federal requirement or has convinced EPA that a previous requirement is no longer supportable;
3. The Administrator determines that it is not appropriate to grandfather under a new EPA policy;
4. A decision to grandfather would have an imminent and substantial adverse environmental impact or foreclose the ability of EPA to exercise its authority under the Clean Air Act (e.g., apply sanctions under Part D).

This guidance builds on existing grandfathering guidance (e.g., air quality dispersion modeling) to establish the general concept of grandfathering where equity dictates such action.

Where grandfathering would render the SIP as a whole substantially inadequate to protect the NAAQS or otherwise to comply with the Act, grandfathering may be allowed only if justified by an individual analysis under the four-part Sierra Club test described earlier, and the grandfathering action would have only a limited life (generally two years). Within that time, the grandfathered revision must terminate (e.g., expiration of a temporary variance), or the State must submit a complete, approvable revision to the SIP to bring it into full compliance with all statutory requirements.

3. Improved Guidance and Communication

Improved guidance and communication is basic to improved certainty in SIP decisionmaking. Many of the recommendations of the task group on SIP processing required new guidance from EPA Headquarters before they could be implemented. These include: the completeness criteria; increased use of direct final; letter notice for nonsubstantial actions; and signature authority for the Regional Administrators. All of these items are discussed elsewhere in this notice.

Logically, action the final sign-off authority is delegated to the Regional Administrator: up-to-date policy and guidance pertinent to the specific categories of SIPs should be assembled and made available to Regional Office reviewers (see section on "SIP Approval Authority" for categories of SIPs). The necessary guidance is being assembled for these categories of SIPs for use by the Regional Offices in the absence of Headquarters review. In addition, alternatives for more timely and systematic update of such guidance are being explored.

Complete and up-to-date guidance is a traditional form of communication between EPA Headquarters and the Regional Offices. EPA recognizes that effective communication will become more important with the implementation of the SIP processing reforms announced today, not only between Headquarters and the Regional Offices, but also between the Regional Offices themselves. It is essential that information on SIP review activities, problems and problem resolution be shared promptly by Headquarters and the Regions so that consistent application of policy and guidance can be assured. Several actions are underway in this regard.

The existing SIP tracking system, "SIP TRAX," which presently only follows SIP submittals from their receipt at Headquarters, is being expanded to track a SIP submittal from receipt by the Regional Office to ultimate disposition (see further discussion under the "Management System" below). Data contained in the system will be refined and adjusted as experience is gained under the new procedures. In parallel with this tracking system change, greater emphasis will be placed on the "key SIP contact" persons in the Regional Offices. Already in place, these persons will have expanded responsibility as the Regional Offices do more of the decisionmaking on SIP submittals. It is expected that more frequent use of conference calls, between some or all Regions, will be made, and a workshop on SIP processing issues will be instituted in conjunction with the Headquarters/Regional Office air program staff conference held annually in North Carolina.

To ensure that effective dialogue takes place periodically, EPA is examining the establishment of a Regional Office SIP Council. Such a Council would be composed of Regional Office SIP review staff, chaired on a rotating basis by one of the offices. The chair would establish a meeting frequency (by teleconference) which could be monthly or at some similar regular period. The purpose of the meetings would be for each Region to discuss SIP processing activities for the period, to highlight unusual issues that arose, and to identify/resolve points of contention between Regions. Headquarters staff would participate in these Council meetings as advisors and to provide policy/technical expertise. Significant results of each meetings would be posted on an electronic bulletin board for future reference and guidance.

Other initiatives are being considered. These include creation of "policy hotlines" establishing Headquarters experts in various program areas to provide quick response to Regional Office inquiries. As an extension of this concept, Regional Office "experts" are expected to emerge over time who would serve the same function for their colleagues. Although the full scope of improved communications techniques has not been fully defined at this time (indeed, should never be finalized since communications flow inherently should be dynamic), EPA is aware of the importance of this function and is giving it high priority.

4. SIP Processing Management System

Effective management of the SIP review process within EPA, including review by both the Regional Offices and Headquarters, is vital to ensure that implementation plans submitted by States are processed expeditiously. As part of this action to improve SIP processing within EPA, the management system is being revised to monitor the processing of implementation plan revisions under the changes described today. A basic goal of this revised management system is to ensure an appropriate degree of consistency between all reviewers in interpreting and implementing the SIP processing guidance and air quality management program policy. The management system will also evaluate the reviewers' conformance to established review procedures. In addition, an outgrowth of the management system will be the identification of issues and problems in implementation plan guidance, policies, and procedures at both Headquarters and Regional Offices. With such information, EPA can ensure the timely update of policy and processing guidance.

The management program is designed to ensure the adequacy of the processing procedures and to facilitate the review of implementation plans. Identification of program deficiencies is not intended to result in recriminations but to improve the process. The effect of the improved management program should be increased public confidence in the air quality management program, and more certainty on the part of States and industry regarding the operation of the SIP review process.

Audits

A key feature of the management system is the development of an audit program. The audit program is designed to review actions, generally after processing is complete and final action is taken, to determine whether processing procedures and program policy have been adhered to during the review of the implementation plan. It is not the intent of the management program to review, or second-guess, every SIP action that is processed within EPA.

The frequency of program audits will be based upon several factors. One factor is the total number of implementation plan revisions processed by a particular office. This is important because significant processing deviations are more likely to result when the number of actions is high. A second factor to be considered in determining the frequency of the audit cycle is the type of actions processed—newly implemented programs with a significant level of complexity should receive greater attention than programs which are well established. Another element in determining the frequency of audits will be the prior performance o the reviewing office. Those that have demonstrated problems should receive greater attention and thus more frequent audit than areas with demonstrated capabilities. As a corollary, in addition to examining performance of specific organizations, the audit program will identify program areas where several organizations are demonstrating a lack of understanding, indicating the possible need for improved guidance.

The audit program must be designed such that the interval between audits is not too lengthy. With reasonable frequency, the management system must be able to obtain an overview of the basic program and the personnel responsible for implementing the program. Such a review is necessary to ensure that the skills and knowledge to effectively process all types of plan revisions are maintained; this is necessary even where few and/or routine plan revisions are received.

The audit program will employ two basic sources of information: (1) Records and documents submitted or prepared as part of the formal submittal and review process; and (2) discussions with the individuals in Headquarters and/or Regional Offices involved with processing of plans in general and associated with specific SIP actions. Through review of the processing documentation and the implementation plan submittal, the auditor can determine independently the procedures followed, how specific policies were applied, conformance to national policy and guidance, etc. Discussions with the individual responsible for the processing and review of SIP actions will provide information related to deficiencies that exist in the processing guidance, difficulties in conforming to program policy for specific actions, and elements missing from EPA guidance that should receive attention at the national level.

The Regional Offices will need to maintain the full documentation and history of each SIP action processed. In the majority of cases this will not result in any extra work load since most of this information is contained in the files already maintained by the appropriate Regional Office. In addition to the currently maintained manual records, EPA intends to expand an operational microcomputer-based system for maintaining the status of currently active implementation plans. The current system tracks SIP revisions for maintaining the status of SIP actions upon receipt of the package by Headquarters and contains no information on plan revisions at the Regional Office; the system will be expanded to maintain information on the status of SIP actions under review by any EPA organizational element. This will permit the rapid transfer of information between Regional Offices and Headquarters on the status of all actions which are active within EPA.

There are two types of audit functions anticipated by this program—internal and external. An internal program audit involves the routine audit of the SIP review process by those individuals within the reviewing organization who are directly responsible for the review of the SIP. This internal audit will occur at both Headquarters and the Regional Offices on an ongoing basis. Rather than mandate the procedures to be used by each Regional Office and appropriate Headquarters office for the internal audit, each office will establish audit procedures that are appropriate based upon resources, capabilities, and the nature of SIP revisions processed. For example, it may consist of senior staff familiar with the program requirements reviewing a selected portion of the revisions processed by the SIP review staff. The Regional Offices will focus their internal audit efforts on those actions to be signed by the Regional Administrators.

The external audit is designed to obtain an independent overview of the program. This audit will be conducted by Headquarters individuals with experience in SIP review but who do not take an active role in the process. The external audit will address all facets of the program including adherence to processing procedures, interpretation of EPA policy, the impact of air quality management, and the effectiveness of the revised procedures in expediting the processing of State submissions. In addition, Headquarters offices will be audited on how well new policy is distributed and explained to the Regional Offices. Audit guidelines will be developed and distributed to all offices responsible for SIP review, identifying in advance the major points of emphasis in the audit program. The external audit will examine not only program deficiencies but also the positive aspects of implementation of the program, providing a report both on how program deficiencies can be improved and on how innovative solutions have increased the efficiency of the SIP review process. An important output of the audit program is the identification of training needs for those individuals responsible for SIP review.

Recordkeeping System

As previously mentioned, EPA has implemented a microcomputer-based data system for tracking the progress of SIPs during Headquarters review. This system, "SIP TRAX," currently tracks specific milestones of the Headquarters review process. These include:

(1) When the revision was received in Headquarters;
(2) Date of staff concurrence;
(3) Date of approval by the Assistant Administrator/Administrator;
(4) Date published in the Federal Register.

The system is accessible by the Regional Offices through a microcomputer-based bulletin board system and is updated on a weekly basis. SIP TRAX will be expanded to incorporate the initial phases of SIP review that occur in the Regional Offices before the implementation plan is forwarded to Headquarters for review. This is important since the process of transfer of SIP decision responsibilities will result in many SIP

actions not coming to Headquarters and thus would not be entered in a system tracking only Headquarters review.

There are several reasons for maintaining such a system. In order for the various Headquarters offices responsible for program development to maintain a sense of the major SIP issues being addressed, a method of summarizing SIP actions processed is necessary. The development of a data base system that can provide such information will reduce the resource burden of soliciting input from Regional Offices. In addition, EPA is frequently asked about the specific status of implementation plan revisions in process by the public, industries, and members of Congress. Since the system will be regularly updated to contain information on all SIP actions, the data base will be more complete and accurate than one solely relying on Regional Offices' responses to periodic inquiries. Overall, an integrated system will allow EPA to determine more accurately the status of, and time and resource commitments allocated to, SIP review wherever it occurs.

Processing Deviations

In addition to the basic program oversight, an important function of the audit will be to identify those circumstances where deviations from processing guidance have occurred. These processing deviations will be examined from the perspective of the potential impact of the action. The identification of processing deviations could result in varying responses, ranging from simple improvements in the review process to those few cases expected where the State may be required to submit a corrective SIP action to resolve a deficiency. The specific corrective action to be taken will be determined on a case-by-case basis.

The majority of implementation plan revisions submitted by States are associated with source specific actions, are administrative in nature, or are in direct response to EPA mandates to incorporate explicit regulatory provisions or language. In most cases, the environmental effect of SIP processing deviations are expected to be insignificant, and thus there should be no need to require the State to submit additional information or to make further revisions to a specific submittal. However, for recurring problems, the State will be notified that a particular aspect of submitting implementation plan revisions should be modified to avoid the problems identified.

More important deviations may include actions where the potential exists for significant environmental impact. As previously stated, SIP actions that are likely to affect the program on a national basis will receive full EPA review and decision by the Administrator. As a result, the actual number of environmentally significant deviations should be limited. Nevertheless, the audit process is designed to identify such situations so that appropriate actions to limit the impact can be taken promptly. In these cases, corrective action will depend on the problem. For proposed actions, EPA may need to withdraw the proposal and reverse the proposed approval/disapproval action. Alternatively, where EPA has fully processed and approved a revision to the implementation plan, it may be necessary to issue a notice of SIP deficiency requiring the State to submit a revision to correct the identified problem. The response to each case would be decided based upon the specific merits of the plan revision involved and the potential environmental impact.

Administrative Requirements

The docket is an organized and complete file of all the information considered by EPA in the development of these SIP processing changes. The docket is a dynamic file because material is added throughout the notice preparation and comment process. The docketing system is intended to allow members of the public and industries involved to identify and locate documents so that they can effectively participate in the process. Along with the statement of basis and purpose of the SIP processing changes and EPA responses to significant comments, the contents of the docket, except for interagency review materials, will serve as the record in case of judicial review (see Clean Air Act, section 307(d)(7)(A), 42 U.S.C. 7607(d)(7)(A)).

The effective date of these changes is January 18, 1989.

Section 317(a) of the Clean Air Act, 42 U.S.C. 7617(a), states that economic impact assessments are required for revisions to standards or regulations when the Administrator determines such revisions to be substantial. The changes described today do not change the substantive requirements for preparing and submitting an adequate SIP package. No increase in the cost as a result of complying with the changes described today is expected; moreover, the monitoring, recordkeeping, and reporting requirements have been determined to be insubstantial. Because the expected economic effect of the changes is not substantial, no detailed economic impact assessment has been prepared.

The information collection requirements of these changes are considered to be no different than those currently required by the Clean Air Act and EPA procedures. Thus, the public reporting burden resulting from today's notice is estimated to be unchanged from existing requirements. The public is invited to send comments regarding the burden estimate or other aspect of information collection, including suggestions for reducing any burden, to the docket and to the following: Chief, Information Policy Branch, PM-223, U.S. Environmental Protection Agency, 401 M Street, SW., Washington, DC 20460; and to the Office of Information and Regulatory Affairs, Office of Management and Budget, Washington, DC 20503, marked "Attention: Desk Officer for EPA."

Under Executive Order 12291, EPA is required to judge whether an action is "major" and therefore subject to the requirement of a regulatory impact analysis (RIA). The Agency has determined that the SIP processing changes announced today would result in none of the significant adverse economic effects set forth in section 1(b) of the Order as grounds for a finding of "major." The Agency has, therefore, concluded that this action is not a "major" action under Executive Order 12291.

This notice was submitted to OMB for review consistent with section 307(d) of the Clean Air Act. A copy of the draft notice as submitted to OMB, any documents accompanying the draft, any written comment received from other agencies (including OMB), and any written responses to those comments have been included in the docket.

The Regulatory Flexibility Act of 1980, 5 U.S.C. 601-612, requires the identification of potentially adverse impacts of Federal actions upon small business entities. The act requires the completion of a regulatory flexibility analysis for every action unless the Administrator certifies that the action will not have a significant economic impact on a substantial number of small entities. For reasons described above, I hereby certify that the final rule will not have a significant economic impact on a substantial number of small entities.

Date: January 3, 1989.

Lee M. Thomas,

Administrator.

[FR Doc. 89-1082 Filed 1-13-89; 8:45 am]

BILLING CODE 6560-50-M

Dave Solom

PN 165-89-02-15-042

UNITED STATES ENVIRONMENTAL PROTECTION AGENCY
WASHINGTON D C 20460

FEB 15 1989

Mr. John W. Boston
Vice President
Wisconsin Electric Power Company
Post Office Box 2046
Milwaukee, Wisconsin 52301

OFFICE OF GENERAL COUNSEL

Dear Mr. Boston:

This is a revised final determination, on reconsideration, regarding the applicability of the Clean Air Act's New Source Performance Standards (NSPS) and Prevention of Significant Deterioration (PSD) provisions to the proposed life extension project at the Port Washington steam electric generating station, which is owned and operated by Wisconsin Electric Power Company (WEPCO). This determination supplements the determination set forth in an October 14, 1988 letter to you from Lee M. Thomas, which in turn incorporated my September 9, 1988 memorandum. I find it necessary to reconsider EPA's original determination and issue this revised determination in part to address matters raised by, and new information submitted by, WEPCO representatives since the October 14 letter. WEPCO believes that these new aspects call into question the accuracy of EPA's prior determination.

For the following reasons, EPA today reaffirms, with limited exceptions detailed below, its earlier findings regarding the Port Washington life extension project. I hereby incorporate by reference the October 14 letter and the September 9 memorandum, and reaffirm the findings and conclusions in those two documents except where they are specifically superseded below.

This action constitutes final agency action for purposes of judicial review under section 307(b) of the Clean Air Act, 42 U.S.C. § 7607(b).

I. CAPITAL EXPENDITURE

EPA explained in its earlier determination that under the General Provisions of the NSPS regulations, a physical or operational change which increases emissions at an affected facility is a modification subject to NSPS. See 40 CFR 60.14(a). However, 40 CFR 60.14(e) provides certain exceptions to that general rule. In particular, section 60.14(e)(2) provides that an increase in production rate at an affected facility would not, by itself, be considered a modification if that increase is accomplished without a capital expenditure.

As has been discussed in recent meetings between WEPCO and EPA, the October 14, 1988 letter from Lee M. Thomas was based in

part on information supplied by WEPCO in a letter dated October 11, 1988 which indicated that the increase in production rate at each of the five units would be accomplished with a capital expenditure. On October 13, 1988, and November 22, 1988 WEPCO submitted revised capital expenditure calculations. EPA has carefully reconsidered its earlier determination based on those two additional submissions.[1] However, as explained below, they provide no grounds on which to alter EPA's earlier finding on capital expenditure.

The modification provisions are designed in part to subject to NSPS those emissions increases caused by an increase in production rate that is in turn attributable to a significant investment in improvements to the capital stock. Consistent with this intent, capital expenditure calculations employ the total, as opposed to annual, cost of a given project at each affected facility.

Thus, the December 16, 1975 preamble to the promulgated definition of capital expenditure states that "...the total cost of increasing the production or operating rate must be determined. All expenditures necessary to increasing the facility's operating rate must be included in this total" (40 FR 58416) (emphasis added). The total cost of the planned work at each facility is then compared to the product of the existing facility's basis and the annual asset guideline repair allowance percentage used by the Internal Revenue Service for taxation purposes. If the total project cost for each facility exceeds the product of the basis and repair percentage for each facility, there is a capital expenditure at that facility. See 40 CFR 60.2.

It is appropriate to accumulate, for capital expenditure purposes, the cost of the renovations necessary to increase the facility's production rate, because the overall work necessary to increase a facility's production rate pursuant to a particular renovation project is the same whether the work is performed in one calendar year or during two (or more) years. The use of annual costs could encourage sources to distort normal business planning by artificially stretching out costs over time as a means of evading a finding of capital expenditure and consequent NSPS coverage.[2]

---

[1] The October 13, 1988 submission was not received in time to be considered in issuing EPA's letter of October 14, 1988.

[2] Indeed, it appears that WEPCO may have extended the planned length of the Port Washington life extension project for precisely this purpose after being informed by EPA in the October

Rather, the purpose of the exemption in 40 CFR 60.14(e)(2) is to exclude from NSPS coverage increases in production rate that are accomplished without "an expenditure for long-term additions or improvements." See 39 FR 36948 (preamble to proposed NSPS regulations). Where the economic realities of the case are that increased production and, hence, emissions, are due to normal fluctuations in the business cycle rather than a considered decision to invest in substantial capital improvements, the NSPS do not apply.

The letter submitted on October 13 from Neil Childress of your staff to Gary McCutchen of EPA presented updated basis figures (determined by multiplying the original capital investment in the facility by a coefficient representing the inflation in construction costs between the year of the investment and the year in which the capital expenditure calculation is made) for each of the emissions units at Port Washington. These figures included costs of repair or replacement of equipment, such as steam turbines, that is not part of the existing affected facility for NSPS purposes. Since applicability determinations under the NSPS modification provisions are based on the existing affected facility, capital expenditure determinations likewise are limited to costs associated with the affected facility. For NSPS Subpart Da, the affected facility is the steam generating unit as defined at 40 CFR 60.40a. Therefore, EPA staff requested WEPCO to limit the basis figures to the steam generating unit.

The November 22, 1988 letter from Neil Childress to Walt Stevenson of EPA presented revised cost figures on the renovation work on steam generating units 1 - 4 related to the capital expenditure calculations. These November 22 basis figures are understood to be limited to costs associated with the affected facility. The November 22 letter also presented a revised and extended schedule for the renovation work, under which the costs of repairs in any one year would not exceed the product of the annual asset guideline repair allowance percentage, which is 5% for electric utility steam generating units, and the basis of each unit. Mr Childress' letter concluded that since 5% of each

---

14, 1988 letter that there would be a capital expenditure using the original schedule. The unit 1 renovations have been extended from four years to five; unit 2 has been extended from four years to six; unit 3 has been extended from three years to six; unit 4 has been extended from two years to four. (Compare Telecopier Transmission, Neil Childress, WEPCO, to Gary McCutchen, EPA, October 11, 1988 (table attached to Response to Question No. 4) with Letter, Neil Childress, WEPCO, to Walt Stevenson, EPA, November 22, 1988, at page 2.)

unit's updated basis is not exceeded by the cost of renovation work in any one year, there would not be a capital expenditure at any of the units. The revised figures also show that the total costs for each unit over the entire renovation period would exceed the 5% basis figure by 50% to 325%.

As explained above, it is the total cost, not the annual cost of a renovation project that determines whether a capital expenditure has occurred. Accordingly, based on the calculations and total project costs in WEPCO's November 22, 1988 letter, the proposed project would result in a capital expenditure at each of the five Port Washington units, and those units would not qualify for the exemption in the NSPS modification provisions at 40 CFR 60.14(e)(2).[3] As to unit 5, WEPCO did not submit cost data limited to the affected facility. Thus, I have no reason to alter EPA's original determination that WEPCO has not demonstrated that the increase in production rate at unit 5 can be accomplished without a capital expenditure.

In addition, I have determined that it is more appropriate to utilize the original basis of each affected facility (as adjusted to reflect past capital improvements), expressed in nominal dollars, rather than the updated basis, expressed in current dollars, in determining NSPS applicability. Thus, even if WEPCO were correct that annual renovation costs, rather than total costs, should be used in capital expenditure calculations, in this case a comparison of annual renovation costs and the

---

[3] WEPCO has argued that since the definition of capital expenditure at 40 CFR 60.2 refers to the IRS "annual asset guideline repair allowance percentage" (emphasis added), EPA is bound by the literal language of its own regulations to use annual rather than total project costs in making capital expenditure calculations. However, the regulations do not dictate such a result. Instead, on their face they call for a comparison between total renovation costs and the annual asset guideline. Had EPA intended the result suggested by WEPCO, it would have explicitly called for comparison of annual costs of the change for projects exceeding one year with the annual asset guideline. This it did not do. In addition, as indicated above, the purpose of the capital expenditure provision would not be served by annualizing project costs for capital expenditure purposes.

(adjusted) original basis of each affected facility shows that a capital expenditure would still occur.[4]

In making a more detailed inquiry into the capital expenditure matter in response to WEPCO's request, I have found that neither the NSPS General Provisions nor the preamble thereto contain any discussion of the matter of original versus updated basis, and that EPA has rarely been called upon to address this issue. However, upon review of EPA's past practice in this area, I have found that in developing performance standards for particular industries, EPA has provided the regulated community a mechanism to calculate the original basis in making capital expenditure calculations. See, e.g., "Equipment Leaks of VOC in Petroleum Refining Industry -- Background Information for Promulgated Standards," EPA-450/3-81-015b, December 7, 1983.[5] This suggests that EPA intended the original basis to be utilized to determine whether a capital expenditure is going to be made.

Moreover, I believe that the use of original basis is consistent with the overall purpose of the NSPS modification regulations in general, and the capital expenditure provisions in particular. The effect of using original basis is that the greater the age of an affected facility, the more likely it is that a given investment resulting in increased production will be deemed a capital expenditure and trigger NSPS. This is consistent with Congress' intent in adopting new source performance standards. Older facilities are more likely to use outdated equipment which does not reduce pollution to the extent more current technology does. Congress included modified sources within the new source performance standards of section 111 to ensure the use of new technology on such sources. See CAA §§ 111(a)(2), 111(a)(4);

II. AIR HEATER RENOVATIONS AT UNIT 1

In January 1989, WEPCO asked EPA to determine whether replacement of the heat transfer surface elements on the unit 1 air heater would trigger PSD or NSPS applicability. However, in a letter dated February 3, 1989, WEPCO withdrew this request,

---

[4] It is worth noting in this regard that if EPA were to adhere to a literal reading of IRS guidelines as urged by WEPCO, it would have no choice but to use original basis as well as annualized costs in making capital expenditure calculations for Port Washington. Using this formula, WEPCO would exceed the repair allowance percentage at units 1 - 5 for most years, and NSPS would still apply.

[5] This Background Information Document provides an alternative to the method prescribed in the General Provision when it is difficult to determine original costs. The formula uses replacement costs and an inflation index to "approximate the original cost basis of the affected facility."

asserting that it could not receive approval in the time necessary, while reserving the right to renew it at a later time as to unit 1 or any other unit at Port Washington. Because this issue may arise again, and because I believe it bears upon the project as a whole, I find it appropriate to address the matter of air heater element replacement. Based on the information submitted regarding this new plan, as well as the earlier information submitted regarding air heater replacement work, I conclude that if WEPCO were to proceed under its revised and now withdrawn plan, it would not alter EPA's earlier finding that PSD and NSPS would apply. In order to explain this finding, it is useful to first summarize the relevant facts.

Originally, WEPCO advised EPA that it planned to replace the air heaters at units 1 - 4 in their entirety. As WEPCO explained:

> Air heaters are subject to the erosive and corrosive effects of the flue gas passing through them and require regular maintenance of the heat transfer surfaces.
>
> The plate-type air heaters on Units 1 - 4 do not lend themselves to replacement of the individual elements. Worn sections have been patched and blocked, where accessible, over the years. Now, however, overall corrosion and perforation has passed beyond the practical point of repair, and replacement of the air heaters is the economical way to maintain the air preheater system.
>
> The air heaters on Port Washington Unit 5 and the other units on the Wisconsin Electric system [other than Port Washington units 1 - 4] are of the Ljungstrom basket design, which allows the heat transfer surfaces (baskets) to be replaced easily. ***

See, e.g., List of Port Washington Projects, p. 6 (Attachment to April 22, 1988 letter from John W. Boston, WEPCO, to Gary McCutchen, EPA).

On January 11, 1989, WEPCO informed the State of Wisconsin that it was considering replacing all the plate elements at unit 1. In a letter to the State of Wisconsin, WEPCO described this project as routine repair work, "necessary to halt the continuing decrease in the capability of Unit 1," and submitted a list of 40 generating units where significant portions of the air heater have been replaced. See Letter, with attachment, from Mark P. Steinberg, WEPCO, to Dale Ziege, Wisconsin Department of Natural Resources, January 11, 1989.

In a telephone conversation with EPA staff the next day, WEPCO indicated that it desired to perform the unit 1 plate replacement work during a current unit outage; that it intended to replace only half, not all, of the elements, at a cost of approximately $500,000; that it intended to later scrap this work and replace the entire air heater as described in the original scope of work, at a cost of $2,600,000; and that it was considering performing the same work at unit 4 also. See Record of Telephone Conversation between David Schulz, EPA, and Mark Steinberg, Neil Childress, and Walter Woelfle, WEPCO, January 12, 1989.

In a meeting on January 17, 1989, WEPCO related that if it replaced half of the plate elements now, it probably would replace the remainder as part of the total renovation project at a later date and not replace the air heater in whole. WEPCO also related that complete replacement of the plate elements should increase unit 1's capability to the original design capacity. Finally, WEPCO stated in response to questions from EPA staff that none of the air heaters or plate elements at units 1 - 4 had ever been replaced in the past. See Memorandum, Meeting with WEPCO regarding the Port Washington Generating Station, from David Schulz, EPA, to Files, January 27, 1989.

In addition to the above information, I note that WEPCO's list of 40 units at which air heater element replacements have occurred include no units containing plate elements such as those on units 1 - 4 at Port Washington. Instead, all of the examples submitted are of the Ljungstrom basket type or the tubular type. I conclude that those examples are too dissimilar to the plate-type elements in use at units 1 - 4 to support WEPCO's contention that the work in question is routine.[6]

Based on all of the foregoing, I find no reason to depart from EPA's earlier conclusion that PSD and NSPS would apply to the air heater work on unit 1. It appears that despite WEPCO's recent recharacterization of this work as a separate project, it is properly viewed as an integral part of the overall Port Washington life extension project. WEPCO cannot evade PSD and NSPS applicability by carving out, and seeking separate treatment of, significant portions of an otherwise integrated renovation program. Such piecemeal actions, if allowed to go unchallenged, could readily eviscerate the clear intent of the Clean Air Act's

---

[6] Further, even the list of air heater replacement work submitted by WEPCO did not establish this as routine repair work. Those 40 units comprise only a small fraction of total operating utility units, and even at the 40 units, air heater repair or replacement appears to have been a one-time occurrence, not routine repair.

new source provisions. Accordingly, if seen as part of WEPCO's previously proposed renovation project, the recent recharacterization of the unit 1 air heater work does nothing to alter the factors determinative of PSD and NSPS coverage.

III. CAPACITY TESTING FOR UNITS 1 - 4

A. Impact of Test Results on NSPS Applicability.

In Lee Thomas' October 14, 1988 letter, EPA stated that baseline emissions for NSPS purposes are determined by hourly maximum capacity just prior to the renovations. EPA relied on actual operating data to determine that current maximum capacity at units 1 - 4 has significantly deteriorated, such that the restoration of original design capacity through the life extension project would result in corresponding emissions increases. As to unit 5, EPA stated that current capacity at unit 5 is zero because it is physically inoperable. EPA rejected WEPCO's unsupported assertions that all five units could be operated at high capacities, but held open the possibility of further discussions on that point. Subsequently, in November and December of 1988, following discussions with EPA, WEPCO conducted capacity tests to determine current actual capacity.

Based on its review and analysis of the test data, EPA finds that the tests adequately demonstrate that units 2 and 3 can be operated at their original design capacity on a sustained basis. Accordingly, I hereby supersede EPA's earlier determination and find that NSPS would not apply to units 2 and 3 by virtue of the proposed renovations so long as the capacity of these units after completion of the work is no higher than demonstrated in the recent tests (694,000 and 690,000 pounds of steam per hour, respectively). As discussed in more detail below, this revised NSPS determination does not affect our determination that the PSD provisions would be applicable to the proposed work on these two units.

During the tests on units 1 and 4, WEPCO was able to operate these units at 497,000 and 586,000 pounds of steam per hour, respectively, representing 72% and 89% of these units' respective original design capacities. These tests are adequate to confirm EPA's original determination that units 1 and 4 are not capable of operating at their original design capacities, and that restoration of the lost capacity through the life extension will trigger NSPS coverage. EPA today also determines that these tests are not adequate to show that current actual capacity for purposes of establishing the NSPS baseline is as high as the levels achieved during the recent tests. Rather, I reaffirm that baseline for those units is determined by the lower capacities reflected in recent actual operating data as set forth in Lee Thomas' October 14 letter. EPA must reject the tests for

purposes of establishing actual NSPS baselines because during the testing discussed above, there were significant, measured exceedances of the applicable particulate mass emission limit, and several measured exceedances of the applicable opacity limit contained in the Wisconsin State Implementation Plan. One of the purposes of these tests was to determine the maximum actual capacity of the Port Washington units that can be achieved in a lawful manner. As a consequence of the measured exceedances, WEPCO's tests cannot be relied on to demonstrate that the company could lawfully sustain the levels achieved during the testing.

Regarding unit 5, I find that by declining to conduct or schedule capacity tests, WEPCO has effectively conceded that unit 5 is at present inoperable. Therefore, I reaffirm that its baseline for NSPS purposes is zero.

B. Impact of Test Results on PSD Applicability.

In its February 3, 1989 letter, WEPCO asserted that EPA's October 14, 1988 determination assumed that the emission rate of each unit would increase following the renovations. Thus, WEPCO claims, EPA did not address the question whether units that are not increasing their emission rates following renovation can be deemed to trigger PSD. WEPCO is incorrect on both counts.

EPA's prior determination explained that under the PSD program, unlike NSPS, baseline emissions are determined by representative actual emissions prior to the physical or operational change. Accordingly, the results of testing conducted by WEPCO, intended to determine current maximum hourly capacity, have no impact on the existence of a significant net emissions increase for PSD purposes. Hence, those test results provide no reason to alter EPA's prior determination regarding PSD applicability.

Actual emissions are the product of the emission rate (amount of pollution per unit of production or throughput, e.g., pounds of sulfur dioxide per ton of coal combusted), the production rate or capacity utilization (amount of production or throughput per hour, e.g., tons of coal combusted per hour), and the hours of operation (e.g., hours per year). In its prior determination, EPA explained that an increase in any one of these three factors, if attributable to a physical or operational change, can trigger an emissions increase for PSD purposes, and rejected WEPCO's contention that only increases in the emission rate were determinative. In so doing, EPA explicitly assumed that emissions increases at Port Washington would come not from an increase in emission rate, but rather from increases in production rate or hours of operation. See Memorandum from Don R. Clay, September 9, 1988 at 8.

WEPCO further implies in its February 3, 1989 letter that the demonstration that units 2 and 3 can operate now at maximum design capacity means that there will be no increase in production rate for PSD purposes following the renovations. This is not the case because PSD baseline emissions are determined by representative actual emission rate, production rate, and hours of operation prior to the physical change. Representative actual emissions are determined by examining the actual emissions during a representative two year period, (See 40 CFR 52.21(b)(21)(ii)) which in this case the Administrator determined to be 1983 and 1984 (See Lee Thomas' Oct. 14 letter, at 5). The hourly capacity demonstration for NSPS purposes is not relevant to the PSD analysis.

IV. NSPS OPERATIONAL LIMITATIONS

In my September 9, 1988 memorandum, I pointed out that an affected facility cannot avoid NSPS applicability by offsetting, through the use of fuel with a lower sulfur content, an increase in the emission rate that would otherwise occur due to a physical or operational change. As I explained at that time, 40 CFR 60.14(e) provides that use of an alternative fuel or raw material -- such as higher-sulfur coal -- which an existing facility was designed to accommodate before a physical or operational change does not constitute a modification for NSPS purposes. It follows that the facility cannot avoid NSPS by switching to lower-sulfur fuel to counteract a prospective increase in emission rate because, under the regulations, the facility would always have to option to switch back to a higher-sulfur fuel at a later date without triggering NSPS.

Subsequent to the issuance of EPA's October 14, 1988 letter, WEPCO inquired whether it might be able to utilize lower-sulfur coal to avoid NSPS at Port Washington, notwithstanding the regulatory provision explained above, by agreeing to federally enforceable permit conditions that would bar the company from switching back to higher sulfur coal in the future. Restrictions of this nature are acceptable for netting transactions under the Act's PSD provisions. However, the statute reflects a basic political decision that fossil fuel-fired sources not rely only on natural occurring less-polluting fuels to comply with the NSPS. Instead, Congress declared that compliance must depend in part upon the application of flue gas treatment or other pollution control technologies. Thus, section 111(a)(1)(A)(ii) defines "standard of performance" for fossil fuel-fired sources as

> requiring the achievement of a percentage reduction in the emissions from such category of sources from the emissions which would have resulted from the use of

> fuels which are not subject to treatment prior to combustion ... .

Congress further clarified this point in a later paragraph of section 111(a) by adding:

> For the purpose of subparagraph (1)(A)(ii), any cleaning of the fuel or reduction in the pollution characteristics of the fuel after extraction and prior to combustion may be credited ... to a source which burns such fuel.

This core policy judgment is reflected as well in the legislative history of the 1977 Clean Air Act amendments. For example, the Conference Report states:

> The Senate concurs in the House provision with minor amendments. The agreement requires (1) that the standards of performance for fossil fuel-fired boilers be substantially upgraded to require the use of the best technological system of continuous emission reduction and to preclude use of untreated low sulfur coal alone as a means of compliance; ... (3) that for fossil fuel-fired sources, the new source performance standards must be comprised of both a standard of performance for emissions and an enforceable requirement for a percentage reduction in pollution from untreated fuel.

H.R. Rep. No. 95-564, 95th Cong., 1st Sess. 130.

Because the will of Congress is so clear that lower-sulfur fuels alone will not suffice to comply with NSPS, it would be inconsistent with the legislative intent for EPA to allow sources to use lower-sulfur fuel to avoid coverage of NSPS in the first instance in the manner suggested by WEPCO. If EPA were to follow such a course, numerous modifications to existing facilities could escape coverage in a manner contrary to the statutory purpose.

V. THE TIMING OF THE LIFE EXTENSION PROJECT

In discussions with EPA, WEPCO has challenged, on grounds of timing, EPA's position on baseline emissions for NSPS purposes. In its prior determination, EPA explained that under the NSPS regulations, baseline emissions are determined by hourly maximum capacity just prior to the renovations. Thus, the baseline for unit 5 at Port Washington is zero because the unit has been shut down for several years due to safety concerns. In response,

WEPCO has presented the hypothetical question whether EPA would still have found a zero baseline if unit 5 had been shut down on a Friday due to some unexpected or catastrophic failure of a major component previously in good working order, and WEPCO had sought to replace that component on the following Monday. WEPCO asserts that in such circumstances, EPA should have established baseline emissions using the emissions rate just prior to the breakdown.

I find it unnecessary to engage in speculation by addressing the hypothetical situation presented by WEPCO, because it is far removed from the true circumstances surrounding the proposed Port Washington life extension project. In fact, unit 5 has been shut down for over four years, not a weekend, and that is the foundation of EPA's analysis and determination.

In conclusion, with limited exceptions, EPA today reaffirms the decisions reached in the October 14 determination. In addition, EPA has concluded that the work on each unit constitutes a capital expenditure and that the proposed air heater plate replacement work on unit 1 would trigger PSD and NSPS. As a result of the capacity test demonstration, however, I find that units 2 and 3 at Port Washington can be operated at their design capacity on a sustained basis. Therefore EPA's earlier determination with respect to NSPS applicability is superseded and NSPS would not apply to units 2 and 3 by virtue of the proposed renovations so long as the capacity of these units after the completion of this work is no higher than demonstrated in the recent tests. This determination does not affect PSD applicability for these two units. If you should have any questions about the foregoing, please feel free to contact me. Thank you for your cooperation in this matter.

Sincerely,

Don R. Clay
Acting Assistant Administrator
for Air & Radiation

Office of Air Quality Planning and Standards
Research Triangle Park, North Carolina 27711

16 MAR 1989

PN 165-89-03-16-039

MEMORANDUM

SUBJECT: Use of Allowable Emissions for National Ambient Air Quality Standards (NAAQS) Impact Analyses Under the Requirements for Prevention of Significant Deterioration (PSD)

FROM: John Calcagni, Director
Air Quality Management Division (MD-15)

William G. Laxton, Director
Technical Support Division (MD-14)

TO: Thomas J. Maslany, Director
Air Management Division, Region III

William B. Hathaway, Director
Air, Pesticides, & Toxics Div., Region VI

This memorandum is in response to recent requests from your offices for clarification of the Environmental Protection Agency's (EPA) policy concerning the implementation of the PSD air quality impact analysis under 40 CFR 51.166(k) [also §52.21(k)]. Of specific concern is the question of whether the required analysis for new major sources and major modifications is to be based on actual or allowable emissions from existing background sources. This memorandum sets forth the position that allowable emissions should generally be used. However, as explained below, certain allowances may be made, primarily with respect to the evaluation of impacts on the long term NAAQS, to consider an existing source's actual annual operations. This position best resolves the inconsistencies between previous written guidance for PSD and the guidance applicable to NAAQS attainment demonstrations for State implementation plans (SIP's).

The PSD regulations at 40 CFR 51.166(k) stipulate that "allowable emission increases from the proposed source or modification, in conjunction with all other applicable emissions increases... would not cause or contribute to air pollution in violation of [any national ambient air quality standard (NAAQS)]." (Emphasis added.) While this provision clearly requires the use of allowable emissions for the new or modified source, it offers no similarly explicit requirement regarding emissions to be used for existing source contributions.

Nationally, States and EPA Regional Offices have utilized several interpretations which have lead to a consistency problem in implementing the requirement for a NAAQS demonstration under 40 CFR 51.166(k). Some States presently accept the use of actual source emissions for existing background point sources, and reference EPA guidance to support their position. Regions, on the other hand, encourage the use of emissions estimates more closely reflecting legally allowable emissions.

Available EPA guidance for PSD, which dates back to 1980, supports the use of actual emissions to project the air quality impacts caused by existing point sources. Specifically, the "Prevention of Significant Deterioration Workshop Manual" (EPA-450/2-80-081, October 1980) states that "actual emissions should be used... to reflect the impact that would be detected by ambient air monitors" for the PSD NAAQS analysis. However, because many sources typically emit at rates well below their legally allowable emission rate on an annual basis, we now believe that the use of actual emissions to demonstrate NAAQS attainment could substantially underestimate the potential air quality impacts resulting from existing sources.

The EPA's policy for demonstrating stationary point source compliance with the NAAQS for SIP purposes clearly requires the use of emissions which are more closely tied to allowable emissions. The model emission input data requirements for such SIP demonstrations are contained in Table 9-1 of the "Guideline for Air Quality Models (Revised)" (GAQM), EPA-450/2-78-02R, July 1986. For "nearby background sources" an adjustment to the allowable emission rate[1] may be made only for determinations of compliance with the annual and quarterly NAAQS, and only with respect to the annual operating factor. For "other background sources" an adjustment to both the operating level and the operating factor, as explained in Table 9-1, could be made for determinations of compliance with the long term and short term NAAQS.

The referenced model emission input data requirements for existing point sources are contained in the GAQM which has undergone rulemaking and is incorporated by reference in EPA's PSD regulations under Parts 51 and 52. Although a footnote in Table 9-1 indicates that the model input data requirements may not apply to PSD NAAQS analyses, we now believe that such requirements should be applied to PSD rather than using actual emissions as indicated in the 1980 PSD guidance. Thus,

---

[1]Emission rates for model input consist of three components: 1) the emission limit, e.g., #/mmBtu; 2) the operating level, e.g., mmBtu/hour; and 3) the operating factor, e.g., hours/day, hours/year.

compliance demonstrations for PSD and for stationary source control strategies under SIP's will be accomplished in a consistent manner.

In order to apply Table 9-1 in the GAQM to PSD NAAQS analyses, certain clarifications need to be provided. First, the proposed major new source or major modification must be modeled at its maximum allowable emission rate. Second, the existing facility to which a major modification has been proposed, but whose actual emissions (not including emissions from the proposed modification) will remain unchanged, may be considered as the "stationary point source subject to SIP emission limit(s)..." to determine the model emission input requirements. Portions of the existing facility where the emission rate is expected to increase as a result of the proposed modification should be modeled at the allowable emission rate. Finally, background point sources 1) having already received their construction permit but not yet in operation, or 2) with less than two years of operational history, should also be modeled at their allowable emission rate.

Of course, an analysis which demonstrates no contravention of the standards, based entirely on maximum allowable emissions rates (including full operation for the entire year) for all modeled point sources is acceptable. If a violation of any NAAQS is revealed by this type of analysis, then the adjustments described above may be made in cases where it can be shown to the satisfaction of the permit granting agency that historical operating levels and/or operating factors will be representative of future conditions.

This use of Table 9-1 of the GAQM for accomplishing the required PSD NAAQS analysis will supersede the various procedural interpretations presently being applied. Since different procedures are currently in use, we believe that it is necessary to provide a grace period for implementing the required procedure. Consequently, modeling analyses for any PSD application submitted to the reviewing agency on or after October 1, 1989 should be based on legally allowable emissions or must use the model emission input data requirements contained in Table 9-1 of the GAQM as clarified above for PSD purposes.

cc: Air Branch Chief, Regions I-X
New Source Review Contacts
Regional Modeling Contacts
E. Lillis
J. Tikvart
T. Helms
B. Bauman

UNITED STATES ENVIRONMENTAL PROTECTION AGENCY
Office of Air Quality Planning and Standards
Research Triangle Park, North Carolina 27711

EC

31 MAR 1989

PN 165-89-03-31-040

MEMORANDUM

SUBJECT: Application of Building Downwash in Prevention of Significant Deterioration (PSD) Permit Analyses

FROM: John Calcagni, Director
Air Quality Management Division (MD-15)

TO: William B. Hathaway, Director
Air, Pesticides, and Toxics Division (6T)
Region VI

Thank you for your memorandum of March 8, 1989 in which you urge consideration of changes to EPA's current policy of applying building downwash to background sources in PSD modeling. Your memorandum describes problems associated with the collection of building dimension data necessary for downwash modeling, and you suggest that EPA might issue rules and provide funding to collect this building data. Alternatively, you believe that downwash modeling should not be required for any background sources.

Members of my staff are currently analyzing several approaches for handling background sources. This will be the subject of a future conference call with the Regional Offices. In the interim, some of our concerns regarding this issue and your specific suggestions are discussed below.

The Guideline on Air Quality Models notes that background concentrations are an essential part of the total air quality concentration to be considered in determining source impacts and therefore requires certain background sources to be fully modeled. The Guideline indicates that ". . . all sources expected to cause a significant concentration gradient in the vicinity of the source or sources under consideration for emission limit(s) should be explicitly modeled." This guidance provides considerable flexibility and requires judgment to be exercised by the reviewing agency in identifying which background sources should be fully modeled. The burden of collecting building dimension data may be mitigated somewhat by application of this judgment. We are exploring the development of additional guidance to better assist in this judgment. However, I caution that it may not be possible to establish many objective "bright line" tests that will eliminate the need for Regional Office judgment in individual cases.

I realize that information needed to model background sources is frequently not contained in the State's existing emission inventory. In some cases the applicant will need the reviewing agency to assist in collecting the data. However, I am not convinced that we must undertake a national effort to issue regulations or to fund the States/Regional Offices to collect the data. It is important to note that the PSD rules place this burden primarily on the proposed source, not the regulatory agencies.

Your memorandum suggests that the PSD analyses could ignore building downwash effects. I do not believe that the PSD rules and the Guideline allow this alternative. Further, since it is not unusual to find a national ambient air quality standards (NAAQS) violation caused by downwash, the PSD analysis must carefully consider that possibility. If a proposed source contributes to a NAAQS violation caused by downwash from a background source, the permit cannot be issued. On the other hand, not every source potentially subject to downwash must be evaluated. Therefore, we are pursuing alternatives to better define the range within which detailed modeling should be required.

In summary, please be assured that we are sensitive to the issues raised in your memorandum and that we will coordinate with Region VI in this effort. If you have any questions, please contact me or have your staff contact Doug Grano at 629-5255.

cc: R. Bauman
D. deRoeck
E. Ginsburg
D. Grano
W. Laxton
E. Lillis
J. Tikvart
D. Wilson
J. Yarbrough

UNITED STATES ENVIRONMENTAL PROTECTION AGENCY
Office of Air Quality Planning and Standards
Research Triangle Park, North Carolina 27711

PN 123-89-04-20-017

APR 2[illegible] 1989

Mr. John P. Proctor
Bishop, Cook, Purcell and Reynolds
Law Offices
1400 L Street, N.W.
Washington, D.C. 20005-3502

Dear Mr. Proctor:

Your letter of February 23, 1989 to Administrator Reilly was referred to me for response. The issues you describe were previously raised to the attention of the Environmental Protection Agency's (EPA's) Region III Office. You now question Region III's rejection of your position that the best available retrofit technology (BART) emission rate used in determining the creditable stack height can be ignored for purposes of setting the facility's operating rate as long as the operating rate is consistent with the national ambient air quality standards (NAAQS). The response provided to you by Region III on October 6, 1988 was extensively discussed with this office and with the Office of General Counsel, and we fully endorse Region III's conclusions and supporting rationale.

In your letter you stated that the sole basis for conducting a fluid modeling study is to justify credit for stack height above formula height, and that nothing requires States to rely on the BART emission rate to determine the appropriate operating rate. Actually, as noted by Region III, before such credit may be considered, the preamble to the stack height regulation is clear that the operating rate must be limited to the BART or new source performance standards (NSPS) rate. The preamble to the stack height regulation also notes that an emission limit more stringent than BART/NSPS may be needed because the sources must also meet the NAAQS and prevention of significant deterioration requirements.

We agree with Region III's conclusion that NRDC v. Thomas, 838 F.2nd 1224 (D.C. Cir 1988), does not support your position. In your February 23, 1989 letter to Administrator Reilly, you raise a new argument not presented to Region III. You argue that the court recognized that operating emission limitations are to be determined after stack height credit has been calculated, based on the court's acknowledgement that Congress imposed technology-based limits in some situations, and EPA has authority to mandate such limits for modeling demonstrations to determine stack height credit. From this you conclude that a technology-based emission rate used for fluid modeling is relevant only to that modeling.

In response, we point out first that the court's discussion of technology-based emission limitations (838 F.2d at 1241) was in reference to NRDC's control-first position and not related to fluid modeling as you suggest. We believe that the opinion indicates clearly that the court regarded the presumptive NSPS emission limit as a limit that must be complied with once the fluid modeling was completed ("We find the attempt of industry to bar control-first no stronger than NRDC's effort to require it in the within-formula context." 838 F.2d at 1241; ". . . industry petitioners assert that in order to use the NSPS presumption, EPA must be able to point to substantial evidence that it is attainable by most of the affected sources. But as EPA allows any source to use a higher emissions rate when NSPS is infeasible, there is no need for any sort of generic demonstration that it is normally so." id at 1242).

Second, in quoting EPA's statement about the significance of fluid modeling demonstrations, the court was merely citing with approval EPA's rationale for refusing to grandfather demonstrations undertaken and approved prior to adoption of the 1985 regulations. This in no way implies a finding by the court that the presumptive NSPS requirement (or higher BART limit) is not the constraining limit. Neither of these references provides support to your position.

In conclusion, we are in full agreement with the position taken by Region III that sources seeking credit above formula height must meet an emission rate consistent with BART/NSPS. While final action as to any particular source would necessarily await a State implementation plan revision, I hope the above responds to your inquiry. Staff in our Region III Office are available to assist you and your client, and I suggest that you contact them directly if you have further questions.

Sincerely,

Gerald A. Emison
Director
Office of Air Quality Planning
and Standards

cc: Charles Carter, OGC
Thomas Maslany, Region III
Marcia Mulkey, Region III

UNITED STATES ENVIRONMENTAL PROTECTION AGENCY
Office of Air Quality Planning and Standards
Research Triangle Park, North Carolina 27711

3 MAY 1989

MEMORANDUM

SUBJECT: Identification of New Areas Exceeding the NAAQS

FROM: John Calcagni, Director
Air Quality Management Division (MD-15)

TO: William Laxton, Director
Technical Support Division (MD-14)

This is in response to your earlier request for our consideration of two modeling related State implementation plan (SIP) issues. Specifically, the two issues are: (1) approval of a proposed SIP emission limit for a source under consideration when there are modeled violations of the national ambient air quality standards (NAAQS) due to nearby background sources in the surrounding area, and (2) the resource burden associated with assembling the data necessary for modeling the background sources. This memorandum restates the existing policy developed by the Model Clearinghouse and discusses limited exceptions to the policy.

SIP Approvals

Our general policy may be summarized as follows:

1. Background concentrations are an essential part of the total air quality concentration to be considered in determining source impacts. Nearby sources which are expected to cause a significant concentration gradient in the vicinity of the source under consideration should be explicitly modeled (as "background" sources).

2. Under section 110 of the Clean Air Act, each SIP must provide for attainment and maintenance of the NAAQS. Where background sources are found to cause or contribute to a violation, a SIP revision for the source under consideration generally should not be approved until each violation in the modeled Region is prevented or eliminated through the SIP rules. This policy avoids approval of a SIP revision which does not provide for attainment throughout the modeled area.

I also recognize that section 110 allows for approval of portions of SIPs. Therefore, exceptions to the general policy may be warranted in certain circumstances. Before any exception will be considered, it must be clearly shown that the SIP would be improved as a result of the partial approval. As a minimum, the following factors should be considered in determining exceptions to the general policy:

1. Approval would not interfere with expeditious attainment (i.e., emissions from the source under consideration do not cause or contribute to the modeled violation).

2. There would be an environmental benefit (i.e., the SIP revision would result in an actual emissions decrease and ambient air quality improvement).

3. Enforcement of the SIP would be improved (e.g., without approval there would be no federally enforceable measure for the source under consideration or ambiguities in the previous limit serve to frustrate enforcement efforts).

Where it is found that an exception should be made based on the above factors, we expect the proposed approval notice to specifically identify the background source violations and clearly state that the State retains an obligation to take action expeditiously to correct the background violations. The final approval notice for the source under consideration should not be promulgated before the State acknowledges the background violations and submits an acceptable schedule for corrective action. The schedule would then be included in the final notice as the State's response to EPA's identification of violations. A SIP call pursuant to section 110(a)(2)(H) should be issued where a State fails to acknowledge its obligation and submit a schedule for resolution of violations during the comment period.

Resources

The resource burden associated with assembling the necessary data and modeling the background sources has been extensively discussed through the Model Clearinghouse and annual modelers' workshops. I believe that the resource burden associated with modeling background sources using current modeling guidance need not be as great as it potentially appears.

The Guideline on Air Quality Models (Guideline) states that the nearby (background) source inventory should be determined in consultation with the local air pollution control agency. Specifically, the Guideline states that "The number of (background) sources is expected to be small except in unusual

situations." In this and in other areas, the Guideline necessarily provides flexibility and requires judgment to be exercised by the reviewing agency. The resource burden may be mitigated somewhat by application of this judgement.

In investigating whether more explicit guidance is needed, my staff has coordinated with the Model Clearinghouse and the modeling and SO_2 contacts in each Regional Office. Given the flexibility that is provided by existing guidance and the tendency for more explicit policy to reduce this flexibility, no further guidance was judged necessary. The Regional Offices generally have been able to work with their States to collect sufficient data to support the necessary modeling. Consequently, there was little support for the suggestion to revise the current policy to more explicitly limit the number of sources that should be modeled for downwash.

Conclusion

I believe that an exception to the general policy regarding processing of SIP revisions may be warranted where it is in the best interests of air quality to approve certain SIP revisions notwithstanding the existence of violations due to background sources. However, the affected State retains an obligation to take corrective action in response to any properly conducted analyses which demonstrate a violation. This policy is consistent with the Guideline and Model Clearinghouse actions. My staff is available to assist in application of this policy on a case-by-case basis.

If you would like to discuss these issues further, please call me or have your staff contact Doug Grano at extension 5255.

cc: R. Bauman
R. Campbell
P. Embrey (OGC)
E. Ginsburg
D. Grano
J. Silvasi
D. Stonefield
J. Tikvart
D. Wilson
Air Division Directors, Regions I-X

UNITED STATES ENVIRONMENTAL PROTECTION AGENCY
Office of Air Quality Planning and Standards
Research Triangle Park, North Carolina 27711

JUN 30 1989

MEMORANDUM

SUBJECT: Response to PM-10 Control Strategy Issues

FROM: Gerald A. Emison, Director
for Office of Air Quality Planning and Standards (MD-10)

TO: Irwin L. Dickstein, Director
Air and Toxics Division, Region VIII

As you know, the Office of Air Quality Planning and Standards (OAQPS) is currently providing technical support to Region VIII and the State of Utah in response to their specific requests for assistance in the preparation of the Utah PM-10 State implementation plan (SIP). On June 2, you wrote to me identifying six issues which need resolution in order for Utah to proceed with development of the SIP. The following is OAQPS' response to those questions:

1a. How should secondary particulates be evaluated for modeling and control strategies?

Section 4.3.1 of the PM-10 SIP Development Guideline states that no model recommended for regulatory use at this time handles secondary particulate or other transformations in a manner suitable for SIP control strategy demonstrations. Thus, any techniques to be used in this regard need to be justified on a case-by-case basis. Our staffs have discussed the May 10 State of Utah proposal for assessing the impacts of secondary particles formed by emissions from Geneva Steel. While little detail has been provided, we agreed with your staff that the proposed technique to add secondary particulate from chemical mass balance (CMB) modeling to the primary PM-10 impacts from industrial source complex modeling in proportion to the ratio of secondary to primary particulates identified in the CMB source profile appears viable.

A procedure to use the results of this modeling analysis to develop a control strategy for secondary particles must also be justified on a case-by-case basis. My staff will comment on Utah's proposed techniques for control strategy development when requested to do so by the Region.

1b. How much credit can be given to control strategies on "assumptions" of source(s) contribution?

Credit will be based on the amount of emission reduction that can be justified by the State in its SIP. The assumptions underlying the emission

reductions would be different for each source category and, thus, would need to be justified on a case-by-case basis. Discussion of credits for three particular source categories is given in question #3 below. For sources with stack test data, the effectiveness of the particular control device could be used to estimate the post-control emissions and, thus, to determine the emission reduction credits. The effectiveness assumptions should be based on the best available information and post-control stack testing should be required to verify the control effectiveness. In those cases where control effectiveness values derived from AP-42 are deemed inappropriate for a specific application, the State may, with appropriate justification and Regional Office and emission factor clearinghouse concurrence, use a different effectiveness value.

2. What should be the design value: modeled or monitored values?

Section 6.2 of the PM-10 SIP Development Guideline states that the preferred approach for estimating a design value is through the use of an applicable dispersion model corroborated by receptor models, any available total suspended particulates data, and any available PM-10 data. It is our understanding that, for the most part, this approach is being attempted in the Utah (Provo) PM-10 SIP. If corroboration is not possible, we recommend that the dispersion model be used except for periods of stagnation; for periods of stagnation, monitored PM-10 data should be used to establish the design value.

3a. How much credit can be given to mandatory wood burning bans?

A Residential Wood Combustion Workshop was held by Region VIII and OAQPS in March 1989 in Missoula, Montana. The supporting document for the workshop, "Guidance Document for Residential Wood Combustion Emission Control Measures," provides the guidance for determining credits. The State of Utah had a representative in attendance at the workshop.

The guidance document describes the recommended features for mandatory curtailment program elements. The essential elements include: a public awareness program, a curtailment program, and an enforcement program. As stated in the document, good programs could receive as much as 50 percent credit for wood burning stoves. This credit is considered a starting point and should be adjusted according to the quality of the programs implemented and justification presented. The features which enhance or detract from the effectiveness of programs are described in detail in the document. It is important that in the course of developing a curtailment program and determining (applicable) credits that the State use the "Guidance Document for Residential Wood Combustion Emission Control Measures."

3b. How much credit can be given to various street sanding/salting control measures?

There is little quantitative information on the effectiveness of control measures for street sanding and salting operations. Generally, the measures would focus on reducing the amount of abrasive material used through improved

planning and spreading methods, using better quality (e.g., more durable) abrasives and more rapid and efficient cleanup. As you know, there is currently an effort under way by the Colorado Department of Health to investigate street sanding control measures further. Also, OAQPS' Emission Standards Division is currently compiling information on the durability and silt content of road abrasives. Results are expected in late 1989. Robin Dunkins and Larry Elmore of my staff are preparing additional information on the effectiveness of street sanding control measures which may be helpful until these studies are complete. My staff will be in contact with Lee Hanley to discuss this information in early July.

3c. How much credit can be given to diesel inspection/maintenance programs?

In previous conversations with my staff, Region VIII was referred to the Office of Mobile Sources for assistance in determining credits for diesel inspection/maintenance. I understand that you have been in contact with them.

4. Will EPA accept a SIP with only compliance schedules and specific overall emission reductions for the stationary source categories that have been identified as major contributors to PM-10 (e.g., not specifically defined control measures)?

A SIP submitted to EPA for approval must meet the "Criteria for Determining the Completeness of Plan Submissions" as delineated in the Federal Register January 19, 1989 (54 FR 2141). One completeness criterion is that the State has adopted the SIP. There is an exception for parallel processing; however, EPA can review and propose to approve a SIP through parallel processing, even though the State has not adopted the necessary regulations, if the technical support criteria have been submitted. The technical support information to be submitted include:

- identification of the affected sources (those to be controlled),
- quantification of the changes in allowable emissions from the affected sources,
- procedures for determining compliance by the sources, and
- a demonstration that the PM-10 standards will be attained within 3 years if the affected sources comply with the new allowable emission rates.

The EPA will give final approval to the SIP after the State has adopted the necessary regulations. We understand that regulation adoption may require a protracted period before final approval can be granted.

5. What emission factor should be applied if such factor does not exist in AP-42? Would the SIP have to be amended if, and when, AP-42 factors are developed?

Emission factors are useful tools that can be used to estimate average emissions from categories of sources when developing emissions inventories for geographic areas such as Salt Lake City and Provo, Utah. If factors are not available in AP-42 for certain source categories, however, the following alternative actions should be taken in order of priority to determine representative emission rates.

a. Conduct source tests to characterize emissions. Tests may be conducted by the source, provided that appropriate quality assurance steps are undertaken. (This alternative may be employed even if emission factors are available, but are disputed.)

b. Contact the EPA Emission Factor Clearinghouse if source testing (alternative a) is not practicable to determine if an unpublished factor already exists or can be derived from existing data.

c. If an unpublished factor cannot be obtained, select a default emission rate in consultation with the State (and the source, if appropriate) that can be used until a factor is developed by the clearinghouse.

A SIP would not ordinarily have to be amended if AP-42 factors are developed later. Factors are available in AP-42 or other EPA reports for nearly all of the larger source categories impacting an area. New factors becoming available for smaller sources should not significantly impact the SIP control strategy. In the unlikely event that a new or revised factor could significantly affect the SIP strategy, a case-by-case evaluation should be made in consultation with OAQPS to determine whether a SIP revision is warranted. If such a condition occurs prior to the proposed SIP being approved by EPA, a case-by-case determination should also be made as to whether the SIP strategy needs to be adjusted. Various considerations, including the existing PM-10 air quality or air quality trend in the vicinity of the source(s), might affect the need for a SIP revision.

6. How does the State enforce PM-10 emission limits without a PM-10 stack test method? Since PM-10 stack test methods currently under review do not consider condensibles for compliance determinations, should the State address condensible PM-10 for stationary sources in its attainment strategy?

In accordance with the SIP Development Guideline, the State of Utah may develop a PM-10 compliance stack test method based on the modified Method 5 procedure described in Appendix C of that guideline. The procedure is also described in the Federal Register of June 6, 1989 (54 FR 24213) as proposed EPA Reference Method 201A for measuring PM-10 emissions from stationary sources. A variation of that method which moves the collecting filter from inside the stack to a heated enclosure outside of the stack may be used to capture particulate matter that condenses above 120 degrees Celsius (120° C). We understand that it may be necessary to regulate particulate matter that

condenses below 120° C; Gil Wood, Chief, Emission Measurement Branch, will contact your staff separately to discuss techniques to measure these condensibles.

I hope that the above discussion is helpful to you. We will continue to work with you to ensure that the proper guidance is given to Utah to develop an approvable PM-10 SIP. Please continue to contact Tom Pace for overall coordination. I also encourage you to continue to work directly with the technical support contacts which have been previously identified.

cc: G. Wood
J. Tikvart
M. Martinez
J. Calcagni
J. O'Connor
L. Hanley
D. Gillam
B. Blaszczak
Director, Air Division, Regions I-VII, IX, X

OAQPS:AQMD:SDPMPB:MD-15:TPace:lferrell:629-5585:6/21/89
Revised:RBauman:PFinch:629-5629:6/30/89
Disk: TP#1, Doc. DICKSTIN
OAQPS-471 Due: 6/23/89

UNITED STATES ENVIRONMENTAL PROTECTION AGENCY
Office of Air Quality Planning and Standards
Research Triangle Park, North Carolina 27711

185

15 JUL 1990

MEMORANDUM

SUBJECT: PM-10 SIP Demonstrations for Small Isolated Areas With Spatially Uniform Emissions

FROM: Robert D. Bauman, Chief
SO_2/Particulate Matter Programs Branch (MD-15)

Joseph A. Tikvart, Chief
Source Receptor Analysis Branch (MD-14)

TO: Chief, Air Branch
Regions I-X

This memorandum is in response to recent conversations between the Particulate Matter Programs Section and Regions VIII and X. The Regions have repeatedly expressed the need for flexibility in control strategy demonstration requirements when confronted with air-sheds where receptor modeling, coupled with proportional (rollback) modeling is considered to be adequate to identify source contributions and demonstrate attainment. The purpose of this memorandum is to discuss the rationale and justification for exercising this flexibility.

It is appropriate in certain situations to rely on a receptor model (RM) demonstration (i.e., use of receptor modeling, emission inventories, design value obtained by air quality monitoring, and proportional modeling) as the basis for a control strategy demonstration. This approach is an option provided for in sections 4 and 6 of the PM-10 SIP Development Guideline. While it is clear from the guideline that the use of dispersion models in combination with receptor models is the preferred approach, in certain limited situations, the use of an RM demonstration alone may be adequate to demonstrate attainment. The State must obtain approval to use the RM demonstration option prior to SIP submittal. The decision that an RM demonstration is adequate to demonstrate attainment is the responsibility of the Regional Office; however, the Region should consult the Model Clearinghouse for advice in making this determination. The Region must justify the determination and, in doing so, must consider all of the following:

1. The spatial representativeness of the monitoring network and the spatial uniformity of emissions. The PM-10 monitoring network must be representative of the maximum air quality impacts from the predominant (i.e., generally on the order of 90 percent) sources and source categories in the PM-10 emission inventory. Emissions from

area source categories are often distributed nearly uniformly across the area. This implies that ambient patterns would not be characterized by strong concentration gradients, thus lessening the need for an extensive monitoring network. However, areas with point sources will generally find an RM demonstration difficult to justify because the concentration pattern would be characterized by local "hot spots." In such cases, a dispersion model, along with representative meteorological data are typically required.

In a few areas, emissions of antiskid materials from a small number of road surfaces constitute the predominant PM-10 source category. These emissions should be uniformly distributed along these road surfaces. The monitoring network must be shown to be in accordance with EPA's monitoring guidance and spatially representative of the maximum air quality impact from this source category.

2. The temporal representativeness of the monitoring network. If the 24-hour NAAQS is controlling, the network must have samples collected at sufficiently frequent intervals to ensure that the impacts from the governing emission sources are adequately monitored.

3. The impact of only a few, relatively well characterized source categories. Receptor models can generally well characterize only a limited number of chemically distinguishable sources or source categories.

The above criteria imply that the area should be relatively small, characterized by uniform areawide emissions of one or two source categories, and geographically isolated from other PM-10 source areas. Examples of circumstances where RM demonstrations may be justifiable are small air-sheds where the only significant emission sources are residential wood combustion and/or road antiskid materials. It must be noted that the prerogative to use RM demonstrations should be exercised judiciously. Even when a RM is employed, consideration should be given to initiation of basic meteorological measurements as a contingency to the control program being found inadequate and predictive dispersion modeling being necessary at a later time. The use of dispersion modeling and receptor modeling in combination remains the preferred approach when both models are applicable to a particular circumstance.

cc: T. Pace
D. Stonefield
D. Wilson
Regional Modeling Contact, Regions I-X
PM-10 Contact, Regions I-X

§ 334.380 Chesapeake Bay off Fort Monroe, Virginia; restricted area, U.S. Naval Base and Naval Surface Weapon Center.

(a) *The area.* Beginning at latitude 37°00'30"N, longitude 76°18'05"W; thence to latitude 37°00'39"N, longitude 76°17'42"W; thence to latitude 37°00'39"N; longitude 76°16'11"; thence to latitude 36°59'18"N, longitude 76°17'52"W; thence to latitude 37°00'05"N, longitude 76°18'17"W; and thence north along the seawall to the point of beginning.

* * * * *

Dated: October 4, 1990.

Patrick J. Kelly,

Major General, USA, Director of Civil Works.

[FR Doc. 90-25678 Filed 10-30-90; 8:45 am]

BILLING CODE 3710-62-M

ENVIRONMENTAL PROTECTION AGENCY

40 CFR Part 51

[AD-FRL-3855-7]

Preparation, Adoption, and Submittal of State Implementation Plans; Corrections to PM-10 Areas of Concern

AGENCY: Environmental Protection Agency (EPA).

ACTION: Technical corrections to the areas of concern for certain Group I and II areas.

SUMMARY: The EPA published national ambient air quality standards (NAAQS) and implementation policies for particulate matter (PM) with an aerodynamic diameter of a nominal 10 microns or less (PM-10) on July 1, 1987 (52 FR 24634 and 52 FR 24672). A notice identifying areas with very high probabilities (Group I) and moderate probabilities (Group II) of violating the PM-10 standards was published on August 7, 1987 (52 FR 29383). A notice that the grouping of three of these areas had been modified was published on March 28, 1989 (54 FR 12820). Work to develop State implementation plans (SIP's) to attain the PM-10 NAAQS began immediately for the Group I areas. Ambient PM-10 concentrations have been monitored in the Group II areas since 1987.

The EPA is, by this notice, clarifying the descriptions of certain Group I and Group II areas of concern listed in the August 7, 1987 notice. This action is being taken because the areas were only generally described in 1987 as cities, counties, or planning areas. The States were given guidance in the PM-10 SIP Development Guideline (EPA-450/2-86-002, June 1987) on how to further define the extent of areas violating the PM-10 standards in the process of developing PM-10 SIP's. Therefore, some States have provided EPA with more detailed descriptions of certain Group I and Group II areas of concern.

DATES: These corrections are effective October 31, 1990.

ADDRESSES: Information supporting the Group I and Group II area descriptions can be obtained from the respective EPA Regional Office which services that particular State. The addresses of the Regional Offices are:

- State Air Programs Branch, EPA Region I, J.F.K. Federal Building, Boston, MA 02203-2211.
- Air Programs Branch, EPA Region II, 26 Federal Plaza, New York, NY 10278.
- Air Programs Branch, EPA Region III, 841 Chestnut Building, Philadelphia, PA 19107.
- Air Programs Branch, EPA Region IV, 345 Courtland Street, NE., Atlanta, GA 30365.
- Air and Radiation Branch, EPA Region V, 230 South Dearborn Street, Chicago, IL 60604.
- Air Programs Branch, EPA Region VI, 1445 Ross Avenue, Dallas, TX 75202-2733.
- Air Branch, EPA Region VII, 726 Minnesota Avenue, Kansas City, KS 66101.
- Air Programs Branch, EPA Region VIII, 999 18th Street, Denver Place—suite 500, Denver, CO 80202-2405.
- Air Programs Branch, EPA Region IX, 1235 Mission Street, San Francisco, CA 94103.
- Air Programs Branch, EPA Region X, 1200 Sixth Avenue, Seattle, WA 98101.

FOR FURTHER INFORMATION CONTACT: Kenneth R. Woodard, Particulate Matter Programs Section, Air Quality Management Division (MD-15), Office of Air Quality Planning and Standards, U.S. Environmental Protection Agency, Research Triangle Park, NC 27711.

SUPPLEMENTARY INFORMATION:

1. Background

On July 1, 1987, the EPA promulgated revised NAAQS for PM (52 FR 24634). The standards incorporate a new indicator of PM that includes only those particles with an aerodynamic diameter less than or equal to a nominal 10 microns.

Simultaneously, EPA published revised requirements for SIP's to attain and maintain the standards (52 FR 24672). In order to focus Federal and State resources on implementing the PM-10 NAAQS first in those areas of the country believed to be violating the standards, EPA classified all areas of the Nation into one of three groups. Group I areas were those having a very high probability of violating the PM-10 standards based on ambient air quality data available for 1984 through 1987 for PM-10 and total suspended PM. Group II areas had a moderate probability of violating the standards, and Group III areas were those believed to be currently attaining the standards.

A list of Group I and II areas in each State was published in the Federal Register on August 7, 1987 (52 FR 29383). The remaining portion of any State not listed as Group I or II in the August 7 notice was classified in Group III.

A subsequent notice, published on March 28, 1989 (54 FR 12820), announced that three revisions had been made to the list of Group I and II areas. Sandpoint, Idaho, was changed from Group I to Group II, effective August 31, 1987 following a determination that the area lacked sufficient ambient data to justify a Group I classification. Porter County, Indiana, was changed from Group I to Group II, effective November 29, 1988 as a result of a settlement agreement negotiated with Bethlehem Steel Corporation (see *Bethlehem Steel Corporation* v. *Thomas*), 87-2476 (7th Cir.). Mono Basin, California, was changed from Group III to Group II, effective June 8, 1988 following review of the information used for the initial classification.

2. Today's Action

The EPA is, by this notice, providing technical corrections to clarify the descriptions of several Group I and II areas of concern. The EPA described the areas of concern generally as cities, towns, counties, or planning areas in the August 7, 1987 notice and stated that these descriptions were only initial definitions of the areas to be investigated in the PM-10 SIP development process. The EPA had previously provided guidance on procedures for determining the boundaries of areas not attaining the standards in section 2.5 of the PM-10 SIP Development Guideline and in section 6.3 of Procedures for Estimating Probability of Nonattainment of a PM-10 NAAQS Using Total Suspended Particulate or PM-10 Data, EPA-450/4-86-017, December 1986.

State air pollution control agencies, in developing SIP's for Group I and certain Group II areas over the past 3 years, have been collecting data on source emissions and ambient PM-10 concentrations, identifying control measures, and predicting future PM-10 concentrations using dispersion models. Consequently, EPA can now more clearly define the extent of certain

Group I and II areas. However, many of the area descriptions published in the August 7, 1987 notice remain unchanged.

3. Group I Area Descriptions

The list of Group I areas of concern published in the August 7, 1987 Federal Register notice is revised to read as follows:

GROUP I AREAS [1,2,3]

State and counties	Area of concern
Alaska:	
Anchorage	Community of Eagle River.
Juneau	City of Juneau: Mendenhall Valley area.
Arizona:	
Cochise	Paul Spur/Douglas planning area: Township 23 south, Range 25 east (T23S, R25E) T23S, R26E; T23S, R27E; T23S, R28E; T24S, R25E; T24S, R26E; T24S, R27E; T24S, R28E.
Pima	Rillito planning area: Townships: T11S, R9E; T11S, R10E; T11S, R11E; T11S, R12E; T12S, R8E. T12S, R9E; T12S, R10E; T12S, R11E; T12S, R12E;
Maricopa and Pinal	Phoenix planning area: The rectangle determined by, and including, T6N, R3W; T6N, R7E; T2S, R3W; T2S, R7E; T1N, R8E.
Yuma	Yuma planning area: Townships: T7S–R21W, R22W; T8S–R21W, R22W, R23W, R24W; T9S–R21W, R22W, R23W, R24W, R25W; T10S–R21W, R22W, R23W, R24W, R25W.
Pinal and Gila	Hayden/Miami planning area: Townships: T4S, R15E; T5S, R16E, T6S, R16E; plus the portion of Township T3S, R16E, that does not lie on the San Carlos Indian Reservation, and the rectangle formed by, and including, Townships T1N, R13E; T6S, R13E; T1N, R15E; T6S, R15E.
California:	
Inyo	Owens Valley planning area: Hydrologic Unit #18090103.
San Bernardino, Inyo, and Kern	Searles Valley planning area: Hydrologic Unit #18090205.
Mono	Mammoth Lake planning area: Includes the following sections: a. Sections 1–12, 17, and 18 of Township T4S, R28E; b. sections 25–36 of Township T3S, R28E, c. Sections 25–36 of Township T3S, R27E; d. Sections 1–18 of Township T4S, R27E; and e. Sections 25 and 36 of Township T3S, R26E.
Fresno, Kern, Kings, and Tulare	San Joaquin Valley planning area.
Riverside, Los Angeles, Orange and San Bernardino	South Coast Air Basin.
Riverside	Coachella Valley planning area.
Imperial	Imperial Valley planning area.
Colorado:	
Archuleta	Pagosa Springs.
Adams, Denver, Arapahoe, Jefferson, Douglas and Boulder	Denver Metropolitan area: All of Denver, Jefferson, and Douglas Counties, Boulder County (excluding the Rocky Mountain National Park) and the Colorado automobile inspection and readjustment program portions of Adams and Arapahoe Counties.
San Miguel	Telluride.
Prowers	Lamar.
Pitkin	Aspen.
Fremont	Canon City.
Connecticut:	
New Haven	City of New Haven.
Idaho:	
Ada	Boise: Northern Boundary—Beginning at a point in the center of the channel of the Boise River, where the line between sections 15 and 16 in township 3 north (T3N), range 4 east (R4E), crosses said Boise River; thence west down the center of the channel of the Boise River to a point opposite the mouth of More's Creek; thence, in a straight line north 44 degrees and 36 minutes west until the said line intersects the north line of T5N (12 Ter. Ses. 67); thence west to the northwest corner T5N, R1W; Western Boundary—Thence, south to the northwest corner of T3N, R1W; thence east to the northwest corner of section 4 of T3N, R1W; thence south to the southeast corner of section 32 of T2N, R1W; thence west to the northwest corner of T1N, R1W; thence, south to the southwest corner of section 32 of T2N, R1W, thence, west to the northwest corner of T1N, R1W; thence south to the southwest corner of T1N, R1W; Southern Boundary—Thence, east to the southwest corner of section 33 of T1N, R4E; Eastern Boundary—Thence, north along the north and south center line of Townships T1N, R4E, T2N, R4E, and T3N, R4E, Boise Meridian to the beginning point in the center of the channel of the Boise River.
Shoshone	City of Pinehurst.
Bannock and Power	City of Pocatello.
Illinois:	
Cook	a. Lyons Township; b. The area bounded on the north by 79th Street, on the west by Route 57, on the south by Sibley Boulevard and on the east by the Illinois/Indiana State line.
Madison	Granite City Township and Nameoki Township.
Indiana: Lake	Cities of East Chicago, Hammond, Whiting, and Gary.
Maine: Aroostook	City of Presque Isle.
Michigan: Wayne	The area bounded by Michigan Avenue from its intersection with I-75 west to I-94, I-94 southwest to Greenfield Road, Greenfield Road south to Schaefer Road, Schaefer Road south and east to Jefferson Avenue, Jefferson Avenue south (Biddle Avenue through the city of Wyandotte) to Sibley Avenue, Sibley Avenue west to Fort Street, Fort Street south to King Road, King Road east to Jefferson Avenue, Jefferson Avenue south to Helen Road, Helen Road east extended to Trenton Channel, Trenton Channel north to the Detroit River, the Detroit River north to the Ambassador Bridge, Ambassador Bridge to I-75, I-75 to Michigan Avenue.
Minnesota: Ramsey	The area bound by the Mississippi River from Lafayette to Route 494, Route 494 east to Route 61, Route 61 north to I-94, I-94 west to Lafayette, and Lafayette south to the Mississippi River.

GROUP I AREAS [1,2,3]—Continued

State and counties	Area of concern
Montana:	
Flathead	The area bounded by lines from Universal Transmercator (UTM) coordinate 700000mE, 5347000mN, east to 704000mE, 5347000mN, south to 704000mE, 5341000mN, west to 703000mE, 5341000mN, south to 703000mE, 5340000mN, west to 702000mE, 5340000mN, south to 702000mE, 5339000mN, east to 703000mE, 5339000mN, south to 703000mE, 5338000mN, east to 704000mE, 5338000mN, south to 704000mE, 5336000mN, west to 702000mE, 5336000mN, south to 702000mE, 5335000mN, west to 700000mE, 5335000mN, north to 700000mE, 5340000mN, west to 695000mE, 5340000mN, north to 695000mE 5345000mN, east to 700000mE, 5345000mN, north to 700000mE, 5347000mN
Lincoln	Libby.
Lake	Ronan, Polson.
Missoula	Township T13N, R19W, sections 2, 8, 11, 14, 15, 16, 17, East 19, 20, 21, 22, 23, 24, 27, 28, 29, East 1/2 30, East 1/2 31, 32, 33, 34, and T12N, R19W, section 4, 5, 6, 7.
Rosebud	Lame Deer.
Silver Bow	Butte
Nevada:	
Washoe	Reno planning area: Hydrographic area 87.
Clark	Las Vegas planning area: Hydrographic Area 212.
New Mexico: Dona Ana	The area bounded by Anthony Quadrangle, Anthony, New Mexico—Texas, SE/4 La Mesa 15 ' Quadrangle, N3200—W10630/7.5, Township 26S, Range 3E, Sections 35 and 36 as limited by the New Mexico—Texas State line on the south.
Ohio:	
Cuyahoga	County.
Jefferson	The portion of the City of Steubenville south to Market Street, plus the area bounded on the north by the southern boundary of the City of Steubenville, on the west by Ohio Route #7, on the south by the southern border of Steubenville Township, and on the east by the Ohio/West Virginia border.
Oregon:	
Jackson	Medford-Ashland air quality maintenance area (including White City)
Josephine	Grants Pass: The area within the urban growth boundary.
Lane	Eugene/Springfield: The area within the urban growth boundary.
Klamath	Klamath Falls: The area within the urban growth boundary.
Texas: El Paso	City of El Paso.
Utah:	
Salt Lake	County.
Utah	County.
West Virginia: Brooke	Follansbee area bounded on the north by the Market Street Bridge, on the east by West Virginia Route #2, on the south by the extension of the southern boundary of Steubenville Township in Jefferson County, Ohio, and on the west by the Ohio/West Virginia border.
Washington:	
King	The portion of the City of Seattle bounded on the east by I-5/East Duwamish Greenbelt, on the south by 104th Street, on the west by the West Duwamish Greenbelt north to Fairmont Avenue, SW., north on Fairmont to Elliott Bay, and Dearborn Street from Elliott Bay to I-5. The city of Kent and a portion of the Green River valley bounded on east and west by the 100-foot contour, on the north by South 212th Street, and on the south by Highway 516.
Pierce	Tacoma metropolitan area bounded on the north by Marine View Drive from Commencement Bay east to the 100-foot contour, southeast along the 100-foot contour to 64th Avenue East, south along 64th Avenue East extended to I-5, I-5 west to the 100-foot contour near Pacific Avenue, and north along the 100-foot contour to Commencement Bay.
Spokane	The area bounded on the south by a line from Universal Transmercator (UTM) coordinate 489000mE, 5271000mN, west to 458000mE, 5271000mN, thence north along a line to coordinate 458000mE, 5288000mN, thence east to 463000mE, 5288000mN, thence north to 463000mE, 5292000mN, thence east to 481000mE, 5292000mN, thence south to 481000mE, 5288000mN, thence east to 489000mE, 5288000, thence south to the beginning coordinate 489000mE, 5271000mN.
Yakima	The area bounded on the south by a line from Universal Transmercator (UTM) coordinate 694000mW, 5157000mN, west to 681000mW, 5157000mN, thence north along a line to coordinate 681000mN, 5172000mN, thence east to 694000mW, 5172000mN, thence south to the beginning coordinate 694000mW, 5157000mN.
Thurston	Cities of Olympia, Tumwater, and Lacey.
Walla Walla	Walkula.
Wyoming: Shendan	City of Shendan.

[1] For convenience, the entire list of Group I areas, as revised is published above.
[2] When cities or towns are shown, the area of concern is defined by the municipal boundary limits as of the date of this notice.
[3] When a planning area is shown, the area of concern includes the entire planning area unless the area is further defined (e.g., by township, range, and/or section).

4. Group II Area Descriptions

As a result of additional information acquired by the States the descriptions of certain areas of concern published in the August 7, 1987 Federal Register notice are revised to read as follows:

GROUP II AREAS [1, 2, 3]

State and counties	Area of concern
Alabama: Jefferson	North Birmingham and Leeds.
Alaska: Fairbanks	Fairbanks.
Arizona:	
Coconino	Flagstaff planning area.
Graham	Safford planning area.
Navajo	Show Low and Joseph City planning areas.
Apache	Show Low planning area.
Santa Cruz	Nogales planning area: [4] The portions of the following Townships which are within the State of Arizona and lie east of 111° longitude: T23S, R13E; T23S, R14E; T24S, R13E; T24S, R14E.
Pima	Ajo planning area: [4] Township T12S, R6W, and the following sections of Township T12S, R5W: a. Sections 6–8, b. Sections 17–20, and c. Sections 29–32.
Pima	Tucson planning area.
Cochise	Tucson planning area.
Pinal	Casa Grande planning area.
California:	
Santa Clara	County.
San Joaquin and Stanislaus	San Joaquin Valley planning area.[4].
Kern	Southeast Desert Air Basin.
Los Angeles	Southeast Desert Air Basin.
Mono	Mono Basin.
Colorado:	
Adams	Brighton.
Boulder	Longmont.
Delta	Delta.
Eagle	Vail.
El Paso	Colorado Springs.
Garfield	Glenwood Springs, Rifle.
Gunnison	Crested Butte.
Routt	Steamboat Springs.
Mesa	Grand Junction, Fruita.
Weld	Greeley.
Guam: Pri	County.
Idaho:	
Bonner	County.[4].
Caribou	Conda.
Illinois:	
LaSalle	Oglesby [4] including the following townships, ranges, and sections: T32N, R1E, S1; T32N, R2E, S6; T33N, R1E, S24; T33N, R1E, S25, T33N, R2E, S31; and T33N, R1E, S36.
Randolph	Baldwin.
Macon	Decatur.
Rock Island	Rock Island, Moline.
Will	Joliet.
St. Clair	East St. Louis.
DuPage	Addison.
Indiana:	
Marion	Subpart of Indianapolis.
Vigo	Terre Haute.
Porter	County.
Iowa:	
Cerro Gordo	Mason City.
Linn	Cedar Rapids.
Polk	Des Moines.
Kansas: Wyandotte	Kansas City.
Kentucky: Boyd	Catlettsburg and Ashland.
Maryland: Baltimore	Baltimore.
Michigan:	
Saginaw	Carrollton.
Monroe	Monroe.
Minnesota:	
Hennepin	Minneapolis.
St. Louis	Duluth and Iron Range.
Itasca	Iron Range.
Lake	Two Harbors Township.
Stearns	St. Cloud Township.
Montana:	
Blaine	Hays.
Flathead	Columbia Falls: [4] Township T30N, R20W, Sections 7, 8, 9, 16, and 17.
Deer Lodge	Anaconda.
Lewis & Clark	Helena.
Sanders	Thompson Falls.
Lincoln	Eureka.
Nebraska:	
Cass	Weeping Water.
Douglas	Omaha.
Nevada:	
Lander, Humbolt, Elko, & Eureka	Battle Mountain area.
New Jersey:	
Hudson	Jersey City.
Camden	Camden
New York: Onondaga	Solvay.

GROUP II AREAS [1, 2, 3]—Continued

State and counties	Area of concern
New Mexico:	
Bernalillo	County.[6]
Grant	County.
Santa Fe	County.
Sandoval	County.
Taos	County
Ohio:	
Wyandot	Carey.
Scioto	New Boston.
Trumbull	Warren, Howland Township.
Lorain	Sheffield Township.
Butler	Middletown.
Seneca	Thompson Township.
Sandusky	Jackson Township.
Belmont	Martins Ferry.
Columbiana	East Liverpool.
Franklin	Columbus.
Hamilton	Cincinnati.
Mahoning	Youngstown.
Montgomery	Dayton.
Richland	Mansfield.
Stark	Canton.
Summit	Akron.
Oklahoma: Comanche	County.
Oregon:	
Deschutes	Bend.
Multnomah	Portland.
Union	LaGrande: [4] the area within the urban growth boundary.
Lane	Oakridge: [5] the area within the urban growth boundary.
Pennsylvania:	
Allegheny	a. The triangular area bounded on the north by an east-west line passing through the North Braddock monitor (at 600 Anderson Street) and intersecting the center line of the Monongahela River, and on the east by a north-south line passing through the East Pittsburgh monitor (at the intersection of Cliff Street and Draper Street) and intersecting the center line of the Monongahela River; b. The area including Liberty, Lincoln, Port Vue, and Glassport Boroughs and the City of Clairton.[4]
Philadelphia	Bridesburg—Port Richmond.
Erie	County.
Lawrence	County.
Mercer	County.
Puerto Rico: San Juan	San Juan.
South Dakota: Pennington	Rapid City.
Texas:	
Dallas	That portion of the City of Dallas enclosed by Loop 12 highway.
Harris	The area bounded on the north side by a line extending eastward from Bennet Street starting at the Southern Pacific Railroad tracks at the intersection of Bennet Street and Clinton Drive and ending at the intersection of Bennet and Legget Streets, on the east side, along Legget Street southward to Clinton Drive, thence eastward to the intersection of Mayo Shell Road, and thence southward again to the Ship Channel, on the south side, westward along the south edge of the Ship Channel, including Brady Island, to East Erath Street and connecting with the Southern Pacific railroad, on the west side, northward along the southern Pacific Railroad to the intersection of Clinton Drive and Bennet Street.
Lubbock	That portion of the City of Lubbock [4] enclosed by Loop 289 highway.
Nueces	That portion of the City of Corpus Christi, bounded by Nueces Bay on the north, Ocean Drive on the east, Highway 44 on the south, and a line due north from Highway 44 at the intersection of Highway 358 to Nueces Bay on the west.
Virginia: Buchanan	County.
Washington:	
Benton	County.[4]
King	Bellevue.
West Virginia:	
Hancock	City of Wierton.[4]
Brooke	Remainder of county.
Wisconsin:	
Brown	DePere.
Milwaukee	Milwaukee.
Waukesha	Waukesha.
Douglas	Superior.
Dane	Madison.
Wyoming: Fremont	Lander.

[1] For convenience, the entire list of Group II areas, as revised, is published above.
[2] When cities or towns are shown, the area of concern is defined by the municipal boundary limits as of the date of this notice.
[3] When a planning area is shown, the area of concern includes the entire planning area unless the area is further defined (e.g., by township, range, and/or section).
[4] The State has recorded violations of the PM-10 NAAQS based upon air quality data through December 31, 1988.
[5] The State has recorded violations of the PM-10 NAAQS based upon air quality data through December 31, 1989.

Authority: Sections 110 and 301 of the Clean Air Act give the Administrator authority to adopt policies necessary to implement NAAQS.

Dated: October 22, 1990.

William G. Rosenberg,

Assistant Administrator for Air and Radiation.

[FR Doc. 90-25518 Filed 10-30-90; 8:45 am]

BILLING CODE 6560-50-M

40 CFR Part 61

[AD-FRL-3856-4]

National Emission Standards for Hazardous Air Pollutants; Benzene Emissions From Chemical Manufacturing Process Vents, Industrial Solvent Use, Benzene Waste Operations, Benzene Transfer Operations, and Gasoline Marketing System; Correction

AGENCY: Environmental Protection Agency (EPA).

ACTION: Final rule; correction.

SUMMARY: This document clarifies the applicability of § 61.300(a) of the National Emission Standard for Benzene Transfer Operations which was promulgated in the **Federal Register** on Wednesday, March 7, 1990 (55 FR 8341). This action is necessary to clarify that the benzene transfer rule does not apply to the loading of crude oil, natural gas liquids or petroleum distillates such as fuel oil, diesel or kerosene. It was never EPA's intent that the benzene transfer rule apply to crude oil, natural gas liquids or petroleum distillates. The benzene content of these materials is well below the 70 percent cutoff in the regulation and will never approach this cutoff.

This notice also changes the applicability date of § 61.300(e) of the regulation as it applies to the loading of benzene into marine vessels. This change is necessary to allow facilities adequate time to design, purchase and install vapor control systems that comply with the U.S. Coast Guard standards that were issued June 21, 1990 (55 FR 25396) and that are effective July 23, 1990. This correction is consistent with EPA's intent to provide an industry-wide waiver of 1 year so that facilities can take into consideration the Coast Guard standards that address safe design, installation and operation of marine vessel vapor control systems.

EFFECTIVE DATE: March 7, 1990.

FOR FURTHER INFORMATION CONTACT: Mr. Doug Bell at (919) 541-5568 or Ms. Laura Butler, (919) 541-5267, Standards Development Branch, ESD (MD-13), U.S. Environmental Protection Agency, Research Triangle Park, North Carolina 27711.

Dated: October 23, 1990.

Michael Shapiro,

Acting Assistant Administrator for Air and Radiation.

For reasons set out in the preamble, title 40, chapter I, part 61 of the Code of Federal Regulations is amended as follows:

PART 61—[AMENDED]

1. The authority citation for part 61 continues to read as follows:

Authority: Secs. 101, 112, 114, 116, 301 of the Clean Air Act, as amended (42 U.S.C. 7401, 7412, 7414, 7416, 7601).

2. Section 61.300 is amended by revising paragraphs (a) and (e) to read as follows:

§ 61.300 Applicability.

(a) The affected facility to which this subpart applies is the total of all loading racks at which benzene is loaded into tank trucks, railcars, or marine vessels at each benzene production facility and each bulk terminal. However, specifically exempted from this regulation are loading racks at which only the following are loaded: Benzene-laden waste (covered under subpart FF of this part), gasoline, crude oil, natural gas liquids, petroleum distillates (e.g., fuel oil, diesel, or kerosene), or benzene-laden liquid from coke by-product recovery plants.

* * * * *

(e) The owner or operator of an affected facility, as defined in § 61.300(a) that loads a marine vessel shall be in compliance with the provisions of this subpart on and after July 23, 1991. If an affected facility that loads a marine vessel also loads a tank truck or railcar, the marine vessel loading racks shall be in compliance with the provisions of this subpart on and after July 23, 1991, while the tank truck loading racks and the railcar loading racks shall be in compliance as required by § 61.12.

[FR Doc. 90-25731 Filed 10-30-90; 8:45 am]

BILLING CODE 6560-50-M

40 CFR Part 761

[OPTS-62035J; FRL 3801-2]

Polychlorinated Biphenyls in ElectricalTransformers; Correction

AGENCY: Environmental Protection Agency (EPA).

ACTION: Final rule; correction.

SUMMARY: EPA issued a final rule on polychlorinated biphenyls (PCBs) in electrical transformers published in the **Federal Register** issue of July 19, 1988 (53 FR 27322). In the codified text of § 761.30(a)(1)(v), EPA inadvertently omitted subparagraphs (A), (B), and (C). This document corrects that error by reinserting these subparagraphs.

EFFECTIVE DATE: This correction is effective October 31, 1990.

FOR FURTHER INFORMATION CONTACT: Michael M. Stahl, Director, Environmental Assistance Division (TS-799), Office of Toxic Substances, Environmental Protection Agency, Rm. E-543B, 401 M St., SW., Washington, DC 20460, (202) 554-1404, TDD: (202) 554-0551.

SUPPLEMENTARY INFORMATION:

EPA issued a final rule on PCBs in electrical transformers published in the **Federal Register** issue of July 19, 1988 (53 FR 27322), in which § 761.30(a)(1)(v) was revised. It was not EPA's intent to delete subparagraphs (A), (B), and (C) from paragraph (a)(1)(v) when the **Federal Register** notice was published. EPA intended only to revise the introductory text of paragraph (a)(1)(v). This document corrects § 761.30(a)(1)(v) by reinserting subparagraphs (A), (B), and (C).

List of Subjects in 40 CFR Part 761

Environmental protection, Hazardous substances, Labeling, Polychlorinated biphenyls, Reporting and recordkeeping requirements.

Dated: September 10, 1990.

Charles L. Elkins,

Director, Office of Toxic Substances

Therefore, 40 CFR part 761 is amended as follows:

PART 761—[AMENDED]

1. The authority citation for part 761 continues to read as follows:

Authority: 15 U.S.C. 2605, 2607, 2611, 2614, and 2616.

2. In § 761.30 by correctly revising paragraph (a)(1)(v) to read as follows:

§ 761.30 Authorizations.

* * * * *

(a) * * *

(1) * * *

(v) As of October 1, 1990, all radial PCB Transformers with higher secondary voltages (480 volts and above, including 480/277 volt systems)

UNITED STATES ENVIRONMENTAL PROTECTION AGENCY
Office of Air Quality Planning and Standards
Research Triangle Park, North Carolina 27711

NOV 14 1990

MEMORANDUM

SUBJECT: Nonattainment Designations and Classifications

FROM: John S. Seitz, Director
Office of Air Quality Planning and Standards (MD-10)

TO: See Attached List

The attached package deals with designations, classifications, and boundaries, and has been developed with the intent of providing information useful to you and the States for implementing requirements of the new Act. I feel these areas are of particular concern because they require immediate attention and election of choices by the State Governors that must be submitted to EPA within 120 days of enactment.

The package was assembled from the perspective of providing you, in as concise but comprehensive a manner as possible at this time, all the information available for assessment of air quality and boundary issues that might be useful in helping States reach their own decisions on these matters. Included are three basic sections for each NAAQS: (1) air quality tables reflecting attainment/nonattainment designations, classifications, and boundaries--this is the key component of the package; (2) a discussion describing the data and issues associated with each pollutant; and (3) a technical appendix that provides more detail on air quality data computations. I suggest you share this information with the States as soon as possible for use as a tool in implementing the designations and classifications requirements of Title I. Items 1 and 3 were sent to you previously. When you complete your review of this information, please contact us so we can reach agreement on any appropriate changes to the air quality tables. Contact Barry Gilbert (FTS 629-5238) on O_3/CO, Eric Ginsburg (FTS 629-0877) on SO_2/Pb, Dave Stonefield (FTS 629-5350) on PM-10, and Tom Curran (FTS 629-5467) on the technical appendix to facilitate this process and to discuss any issues that surface as you work through the designation process with the States.

I hope this material is helpful and meets your needs. We will be following up this information with more comprehensive guidance in the near future. Toward that end, AQMD will be setting up a conference call in the next 2 weeks with the Regions to review the designations and classifications procedure.

Attachment

Addressees:
Air Management Division Director, Region III
Air and Waste Management Division Director, Region II
Air, Pesticides and Toxics Division Directors, Regions I, IV and VI
Air and Radiation Division Director, Region V
Air and Toxics Division Directors, Regions VII, VIII, IX and X

cc: State Air Programs Branch, Region I
Air Programs Branch, Regions II-IV, VI, VIII-X
Air and Radiation Branch, Region V
Air Branch, Region VII

O_3/CO/NO_2 NONATTAINMENT AREA DESIGNATIONS

Overview

The designation and classification requirements of the amendments are summarized below for ozone (O_3), carbon monoxide (CO), and nitrogen dioxide (NO_2). The attainment/nonattainment status for the O_3, CO, and NO_2 NAAQS is shown in Attachment 1.

The listing is based on the most recent, currently available air quality data in the AIRS system, i.e., 1987-1989 data for O_3 and 1988-1989 data for CO. We believe these are the appropriate years to use since 1989 is the last complete year of quality assured data, and the legislative history indicates that Congress intended the classifications to be based on 1987-1989 data. It is EPA's intention to allow the use of all valid data for those years from properly located monitors in developing nonattainment lists.

The new Clean Air Act (CAA) requires two basic procedures for designating, determining boundaries for, and classifying O_3 and CO areas. First, as of the date of enactment, current section 107 designations of nonattainment for all O_3 and CO areas are adopted by operation of law, including existing boundaries and classifications of nonattainment on the basis of 1987-89 data (1988-1989 for CO). The boundaries for Serious CO nonattainment areas and O_3 nonattainment areas classified as Serious, Severe, or Extreme will be revised to include the entire metropolitan statistical areas (MSA) or consolidated metropolitan statistical areas (CMSA). The EPA will, upon satisfactory demonstration by a State that emissions from part(s) of the MSA/CMSA do not contribute to the NAAQS violation, exclude that part(s) from the nonattainment designation. States also have the opportunity, under limited circumstances, to adjust the classification under the 5 percent rule.

Second, within 120 days of enactment, the Governor shall submit a list of all areas, their designations, and their boundaries, in the State. Within 120 days, EPA shall promulgate this list, making appropriate revisions (after notifying the State). This process may result in the expansion of boundaries for areas designated nonattainment by operation of law as of the date of enactment. In addition, this process may result in the redesignation of areas designated attainment or unclassifiable as of the date of enactment to nonattainment based on current air quality. Areas newly designated to nonattainment will then be classified, and any that are classified Serious or higher are subject to the MSA/CMSA boundary consideration process.

Designations/Classifications/Boundaries at Date of Enactment

Any area currently designated nonattainment under section 107 at the time of enactment of the CAA Amendments of 1990 is designated, by operation of law, as a nonattainment area at the date of enactment. These areas are identified on the attached listing.

Each area designated nonattainment for O_3 will be classified at the time of the designation (date of enactment), by operation of law, as Marginal, Moderate, Serious, Severe, or Extreme on the basis of 1987-89 data. Table 1 lists the design values and attainment dates for each category.

TABLE I

OZONE CLASSIFICATIONS

Area Classification Standard	Design Value*	Primary Standard Attainment Date**
Marginal	0.121 up to 0.138	3 years after enactment
Moderate	0.138 up to 0.160	6 years after enactment
Serious	0.160 up to 0.180	9 years after enactment
Severe	0.180 up to 0.190	15 years after enactment
	0.190 up to 0.280	17 years after enactment
Extreme	0.280 and above	20 years after enactment

* The design value is measured in parts per million (ppm).
** The primary standard attainment date is measured from the date of the enactment of the CAA Amendments of 1990. Attainment should be as expeditious as practicable, but no later than the date listed.

In like manner, each area designated nonattainment for CO shall be classified at the time of the designation (date of enactment), by operation of law, as either Moderate or Serious. Table II lists the design values and attainment dates for each category.

TABLE II

CARBON MONOXIDE CLASSIFICATIONS

Area Classification Standard	Design Value	Primary Standard Attainment Date*
Moderate	9.1 - 16.4 ppm	December 31, 1995
Serious	16.5 and above	December 31, 2000

*Attainment should be as expeditious as practicable, but no later than the date listed.

Boundaries

All areas designated nonattainment at the date of enactment take as their boundaries their current boundaries.

However, within 45 days of enactment, the boundaries for O_3 and CO nonattainment areas located within MSA's or CMSA's that are classified as Serious, Severe, or Extreme are automatically revised to be the entire MSA/CMSA unless the Governor submits a letter by that time stating that the matter should be studied further. If the Governor submits the letter, the State may then submit specific alternative findings demonstrating that the appropriate area is smaller than the MSA or CMSA. If EPA concurs in those findings within 14 months of classification, the smaller area will become the boundary; otherwise, the MSA or CMSA will become the boundary. The legislative history indicates that Congress presumed the boundaries would be MSA/CMSA, and the test for the State to narrow the boundaries is to be a difficult one to pass.

For Marginal and Moderate areas, States can consider such factors as population, population density and growth patterns, commuting patterns, commercial development, industrial development, topographic and meteorological conditions, and pollution or precursor transport in defining the boundaries. The default area for boundaries for O_3 and CO nonattainment areas should be the MSA/CMSA.

Classification Adjustments

The Amendments provide that the classification of O_3 areas classified at the date of enactment and all CO areas may be adjusted by the Administrator within 90 days to the next higher or lower category if the design value is within 5 percent of the adjacent classification category. Adjustments of classifications for O_3 areas classified after the date of enactment may be made by the Administrator 90 days after classification, as described below.

The Amendments grant EPA broad discretion in making or declining to make the adjustment. The EPA intends to examine the individual circumstances supporting a request to adjust the classification. Factors to be considered include the design values of the neighboring areas, the number of exceedances in the area in 1987-1989 (1988-1989 for CO), the design value and number of exceedances considering earlier years, and the area's geographic proximity to and the prevailing meteorology between other areas experiencing air quality violations to which the area under consideration might be contributing.

State List/EPA Promulgation Process

The Act provides that within 120 days after enactment, each State must submit a list of all O_3 and CO areas within the State, designating each area, and determining the boundary for each area. The EPA must promulgate this list within 120 days (approximately 8 months from enactment), although EPA is granted broad authority to make revisions (after first notifying the State). If the Governor does not submit a recommendation for an area, the Administrator shall promulgate the designation that he deems appropriate.

Under this process, the designations of all areas designated nonattainment under section 107 as of the date of enactment will simply be affirmed as nonattainment--such designation may be revised to attainment only through a separate process for redesignation (which requires a maintenance plan). Because the designations are simply being affirmed, the Act does not authorize another classification. Therefore, the classification that occurred for these areas as of the date of enactment will remain. However, the boundaries of these areas may be determined during this process. As described above, for Marginal and Moderate areas, States can consider such factors as population, population density and growth

patterns, commuting patterns, commercial development, industrial development, topographic and meteorological conditions, and pollution or precursor transport in defining the boundaries. The default area for boundaries for O_3 and CO nonattainment areas should be the MSA/CMSA.

Designation of areas designated attainment or unclassifiable as of the date of enactment (because that was their pre-enactment designation) may be revised to nonattainment based on recent air quality. Any such newly designated nonattainment areas will be classified at the time of this designation. If the classification is Marginal or Moderate, the boundaries will be determined through this process; if the classification is Serious or higher, the boundaries will become the MSA/CMSA unless, within 45 days of the classification, the Governor submits a letter indicating a study. In this case, the boundaries will be determined within 8 months of the classification. The classification will also give rise to an opportunity for a 5 percent adjustment--the same as described above--for O_3 areas (but not CO areas because their 5 percent adjustment applies only within 90 days of enactment).

Transitional Areas

Transitional areas are defined in the Amendments as areas designated nonattainment under section 107 of the current CAA before the date of enactment which have not violated the primary NAAQS for O_3 from January 1, 1987 to December 31, 1989. These areas are currently designated nonattainment but there is strong evidence that they have actually attained the standard. New ozone-specific requirements under the Amendments are suspended until December 31, 1991. By June 30, 1992, the Administrator will determine whether these areas attained the standard by December 31, 1991. If EPA determines that an area has attained the standard, the State is required to submit a maintenance plan within 12 months of the determination. At such time as an area is judged not to have attained the standard, but not later than June 30, 1992, the Administrator shall designate the area nonattainment with an appropriate classification assigned.

Transitional areas are identified with a footnote on the attached list.

Nitrogen Dioxide

For NO_2, the current nonattainment area (Los Angeles) is designated nonattainment at the date of enactment by operation of law. No other areas are currently identified as monitoring nonattainment for NO_2.

PM-10 NONATTAINMENT AREA DESIGNATIONS

Overview

Amendments to section 107 of the CAA will, upon enactment, designate by operation of law all areas of the country as either nonattainment or unclassifiable. First, PM-10 Group I areas, as defined in 52 FR 29383 (August 7, 1987), or subsequent modifications to the boundaries issued before enactment, will become nonattainment areas. Second, any Group II or III areas where violations of the PM-10 NAAQS were measured before January 1, 1989 will also become nonattainment areas. Other Group II and III areas will be designated unclassifiable.

PM-10 Designations Under the CAA Amendments

The EPA has published a Federal Register notice (55 FR 45799, October 31, 1990) that makes technical corrections to the descriptions of the areas as published in 1987 (52 FR 29383, August 7, 1987).* The corrections were intended to define more clearly the boundaries of certain areas that will be designated nonattainment by operation of law and were based on information the States have provided in the PM-10 SIP development process. Note that these corrections also identified by footnote those Group II areas with violations based on data through December 31, 1988.

A subsequent Federal Register notice will be published after enactment formally announcing the Group II and Group III areas that were designated nonattainment by operation of law because they recorded violations of the NAAQS before January 1, 1989. This notice will also reaffirm the Group I areas as nonattainment areas. The list of nonattainment areas designated by operation of law identifies the initial nonattainment areas for PM-10. Redesignations of other areas to nonattainment shall follow the general criteria and procedures set forth in section 107(d) of the CAA as amended. Pursuant to these criteria, States will be asked to redesignate to nonattainment any areas determined to be violating the PM-10 NAAQS based on data collected after December 31, 1988.

Boundaries

Boundaries for initial PM-10 nonattainment areas were based on procedures in section 2.5 of the PM-10 SIP Development Guideline and in section 6.3 of Procedures for Estimating Probability of Nonattainment of a PM-10 NAAQS Using Total Suspended Particulate or PM-10 Data, EPA-450/4-86-017, December 1986. Section 6.3 discusses three approaches: (1) qualitatively determining the area of air quality represented by the monitor(s) measuring violations, (2) evaluating the data from a network of monitors and interpolating the PM-10 concentrations between monitors measuring violations and those not measuring violations, and (3) using dispersion modeling to identify the area with violations. Using the above criteria, boundaries of future nonattainment areas should be specified using clearly identifiable political or physical boundaries. This could include city, county, or State boundaries or rivers and mountain ranges. However, the boundaries should encompass the entire area to which a control strategy is expected to apply. The default area for PM-10 designations are the county boundaries.

*Attachment 2 is a listing of PM-10 areas excerpted from the technical corrections Federal Register notice.

LEAD (Pb) NONATTAINMENT AREA DESIGNATIONS

Overview/Current Status

Under section 110 of the CAA, States are required to meet the NAAQS and submit a plan which provides for the implementation, maintenance, and enforcement of this standard. Lead is not, however, subject to requirements of section 107 of the

current CAA which required States to designate areas with respect to attainment of the NAAQS in existence as of enactment of the 1977 CAA Amendments (August 7, 1977). The CAA Amendments contain provisions which would grant EPA authority to designate areas with respect to attainment of the current Pb NAAQS. Where measured violations exist, the EPA believes States should be required to submit such designations.

Pb Designations Under CAA Amendments

After enactment, EPA must notify the Governor of each State of the requirements to designate areas with respect to Pb. The Governors will be asked to designate within 120 days of such notification by EPA, all areas listed as either nonattainment or unclassifiable. Attachment 3 is a listing of 29 Pb smelters which have been targeted as possibly violating the Pb NAAQS. Fourteen of the smelters are located in 12 counties which have measured violations of the Pb NAAQS; these areas should be designated nonattainment. Fifteen are in 12 counties for which insufficient data are available and thus should be designated unclassifiable. The EPA intends to incorporate this action on Pb into the overall designation schedule which provides for promulgation within 120 days following submittal by the Governors.

Boundaries

Due to the similar nature of the pollutants, the approach for determining Pb boundaries will be the same as for PM-10 areas. These approaches are found in section 2.5 of the PM-10 SIP Development Guideline and in section 6.3 of the document entitled Procedures for Estimating Probability of Nonattainment of a PM-10 NAAQS Using Total Suspended Particulate or PM-10 Data. These approaches are: (1) qualitatively determining the area of air quality represented by the monitor(s) measuring violations, (2) evaluating the data from a network of monitors and interpolating the PM-10 concentrations between monitors measuring violations and those not measuring violations, and (3) using dispersion modeling to identify the area with violations. The default areas for Pb designations are the county boundaries.

SO_2 NONATTAINMENT AREA DESIGNATIONS

Overview

Any area currently designated nonattainment under section 107 at the time of enactment of the CAA Amendments of 1990 is designated by operation of law as a nonattainment area. Section 107(d) of the CAA as amended by the 1990 Amendments authorizes the Agency to notify the State that the designation of an area should be revised. The legislation requires the Administrator to first notify the Governor of a State that available information indicates the need to revise a designation. The Governor is then given 120 days from such notification to submit any redesignations and/or additional nonattainment areas. The EPA must then promulgate the redesignation within 120 days after the Governor's submittal.

SO_2 Designations Under CAA Amendments

There are currently 50 SO_2 nonattainment areas designated under section 107. These designations are made predominantly by county, but some States have also elected to designate areas by air quality control region, township, or other area within the State. Based on the available data (1988-1989), the Office of Air Quality Planning and Standards has identified 10 new areas which we expect will be redesignated as nonattainment. Attachment 4 lists the existing nonattainment areas and the areas for which information indicates the designation should be revised to nonattainment.

Boundaries

The SO_2 program will rely on the current boundaries for existing nonattainment areas. When States submit their requests to designate additional areas as nonattainment, EPA will continue to consider other reasonable boundaries. The default area for SO_2 designations is the county boundaries.

UNITED STATES ENVIRONMENTAL PROTECTION AGENCY
Office of Air Quality Planning and Standards
Research Triangle Park, North Carolina 27711

NOV 2 7 1990

MEMORANDUM

SUBJECT: Stack Height Questions

FROM: John Calcagni, Director
Air Quality Management Division (MD-15)

TO: Irwin L. Dickstein, Director
Air and Toxic Division, Region VIII

The following guidance is provided in response to the five issues raised in your memorandum of November 8, 1990 regarding good engineering practice (GEP) stack height. The issues and answers are presented below in the same order as your memorandum.

1. Issue:
A source seeking stack height credit above formula GEP is required by regulation to demonstrate an exceedance of an ambient air quality standard. The regulation also provides that the allowable emission rate to be used in making the demonstration shall be the new source performance standard (NSPS), unless this is shown to be infeasible. The regulations, however, do not address what emission rates to use when there are no NSPS emission rates applicable.

Answer:
The preamble to the stack height regulation is clear that the emission rate must be limited to the NSPS or best available retrofit technology (BART) rate (50 FR 27898). The legislative history of the stack height requirement cautioned that credit for stacks above formula height be granted only in rare cases. For this reason, EPA determined that sources seeking credit above formula height should first attempt to reduce their emissions. In establishing an emission rate other than NSPS, the preamble states that EPA will rely on its BART guideline. Thus, we believe that a BART analysis must be conducted to determine the emission rate to be used in studies demonstrating GEP stack height greater than formula height when no NSPS limit is applicable.

2. Issue:
In completing a BART analysis, should we follow the procedures described in the October 28, 1985 memorandum from Darryl Tyler to the Air Management Division Directors entitled "Implementation of Stack Height Regulations--Presumptive NSPS Emission Limit for Fluid Modeling Stacks Above Formula GEP Height?"

Answer:
This guidance continues to apply to all fluid modeling and field study demonstrations and thus should be followed by the State of Montana and ASARCO.

3. Issue:
Does Headquarters have individuals to review a BART analysis for a primary lead smelter?

Answer:
The Office of Air Quality Planning and Standards will provide whatever assistance is needed to Region VIII concerning the BART analysis.

4. Issue:
Following a demonstration that credits stack height above formula GEP, is the source still required to meet an emission limit consistent with the NSPS/BART limit if the source can demonstrate that it can emit more but still be in compliance with the national ambient air quality standards (NAAQS)?

Answer:
The preamble to the stack height regulation is clear that the operating rate must be limited to the BART or NSPS rate (50 FR 27898). The preamble also notes that an emission limit more stringent than NSPS/BART may be needed because the sources must also meet the NAAQS (50 FR 27899). Thus the BART limit, once established, must be complied with by the source unless additional control is needed to meet the NAAQS when stack height credit is limited to GEP.

5. Issue:
The stack height regulation requires sources seeking credit above formula GEP to show an exceedance of an air quality standard. Does this mean an exceedance of a NAAQS or ambient standards that have been approved in State implementation plans?

Answer:
We interpret the reference in the regulation to "an" ambient air quality standard as meaning a "national" ambient air quality standard. A State, however, is always free to impose more stringent requirements. In some instances, it may be difficult to determine whether a State standard is more stringent than a NAAQS; therefore, a case-by-case analysis would be required when using standards other than a NAAQS.

I trust this guidance adequately responds to your concerns. For further discussion, please have your staff contact Doug Grano at FTS 629-5255.

cc: Pat Embrey, OGC
SO_2 Contacts

UNITED STATES ENVIRONMENTAL PROTECTION AGENCY
Office of Air Quality Planning and Standards
Research Triangle Park, North Carolina 27711

MAR 4 1991

MEMORANDUM

SUBJECT: PM-10 SIP Attainment Demonstration Policy for Initial Moderate Nonattainment Areas

FROM: John Calcagni, Director
Air Quality Management Division (MD-15)

William G. Laxton, Director
Technical Support Division (MD-14)

TO: Director, Air, Pesticides, and Toxics Management Division, Regions I, IV, VI
Director, Air and Waste Management Division
Region II
Director, Air Management Division
Regions III and IX
Director, Air and Radiation Division
Region V
Director, Air and Toxics Division
Regions VII, VIII, X

Overview

The purpose of this memorandum is to document EPA's attainment demonstration policy for initial moderate PM-10 nonattainment areas, i.e., those designated nonattainment upon enactment of the Clean Air Act Amendments of 1990 and, by operation of law, classified as moderate upon enactment. This policy supplements the attainment demonstration guidance set forth in the PM-10 SIP Development Guideline (June 1987), the Guideline on Air Quality Models (Revised), and the memorandum from Joseph Tikvart and Robert Bauman dated July 5, 1990. It is limited in application to those moderate PM-10 nonattainment areas designated nonattainment at enactment, all of which have a November 15, 1991 deadline for submitting attainment demonstrations and other State implementation plan (SIP) requirements. The short period in which the statute mandates the demonstration submittal for these areas has been an important factor in EPA's decision to supplement its attainment demonstration policy.

Policy

Generally, all SIP submittals for the initial moderate PM-10 nonattainment areas should follow the existing guidance on PM-10 modeling as noted above. In the situation where an area has completed or can complete its demonstration by November 15, 1991 consistent with existing guidance, an attainment demonstration based on the existing guidance should be submitted. However, in those situations where time constraints, inadequate resources, inadequate data bases, lack of a model for some unique situations, and other unavoidable circumstances would leave an area unable to submit an attainment demonstration within the short timeframe provided by the newly revised law, then a modified demonstration based on this policy statement may be submitted. Section 189(a)(1)(B) of the recently revised Clean Air Act requires that all modified demonstrations be based on some form of "air quality modeling." In addition, 40 CFR §51.112 requires that a demonstration be shown to be "adequate and appropriate." This supplemental policy is issued in accordance with these statutory and regulatory requirements.

All such modified demonstrations should be accompanied by the following:

1. Documentation of Modified Modeling Method. Documentation of the procedures or analyses used in lieu of those set forth in the previously issued guidance.

2. Rationale for Modified Demonstration. An explanation of why the alternative modeling techniques set forth in the guidance were not used.

3. Justification of Modified Demonstration. A description of how and why the SIP provides an adequate and appropriate demonstration of areawide attainment. If the design value contained in the demonstration is based on monitoring data, the justification should also:

(a) Show that the SIP is based on at least one full year of data from an approved network that meets EPA's quality assurance requirement. Also, the justification should contain a review of the monitoring data (e.g., data completeness, prescribed sampling frequency) in accordance with EPA's SIP development guidance. The justification should also include a review the network's ability to identify the point of maximum concentration and the impact of most significant sources.

UNITED STATES ENVIRONMENTAL PROTECTION AGENCY
Office of Air Quality Planning and Standards
Research Triangle Park, North Carolina 27711

194

MAR 11 1991

MEMORANDUM

SUBJECT: New Source Review (NSR) Program Transitional Guidance

FROM: John S. Seitz, Director
Office of Air Quality Planning and Standards (MD-10)

TO: Addressees

The Clean Air Act Amendments of 1990 (1990 Amendments) make numerous changes to the NSR requirements of the prevention of significant deterioration (PSD) and nonattainment area programs. The 1990 Amendments create new and expanded nonattainment areas, extend PSD coverage to current Class I area boundaries, and mandate a PSD exemption for certain hazardous air pollutants. The Environmental Protection Agency (EPA) intends to propose by September of this year a regulatory package that will implement these and other changes to the NSR provisions. Final adoption of these revised regulations is projected for August 1992.. In the interim period between passage of the 1990 Amendments and adoption of the Agency's final regulations, EPA expects that numerous issues regarding the 1990 Amendments will arise. This memorandum sets forth the Agency's position on the most important of these transitional issues involving the NSR program.

This guidance document does not supersede existing State regulations or approved State implementation plans. However, in some cases, it calls upon States to implement their NSR programs in a manner consistent with provisions of the 1990 Amendments that are applicable immediately and with the requirements that flow directly from these provisions. Nonetheless, the policies set out in this transition memorandum are intended solely as guidance and do not represent final Agency action. They are not ripe for judicial review for this reason. Moreover, they are not intended, nor can they be relied upon, to create any rights enforceable by any party in litigation with the United States. The EPA officials may decide to follow the guidance provided in this memorandum, or to act at variance with the guidance, based on an analysis of specific circumstances. The Agency also may change this guidance at any time without public notice.

The Regional Offices should send this guidance document to their States. Questions from States and applicants concerning specific issues and cases should be directed to the appropriate EPA Regional Office. If you have any general questions, please contact Mr. Michael Sewell of the New Source Review Section at FTS 629-0873 or (919) 541-0873.

Attachment

Addressees
Director, Air, Pesticides, and Toxics Management Division,
Regions I, IV, and VI
Director, Air and Waste Management Division, Region II
Director, Air Management Division, Regions III and IX
Director, Air and Radiation Division, Region V
Director, Air and Toxics Division, Regions VII, VIII, and X

cc: J. Calcagni
R. Campbell
W. Laxton
E. Lillis
J. Rasnic
L. Wegman
J. Weigold
NSR Contacts

New Source Review (NSR) Transitional Guidance

Toxics and National Emissions Standards for Hazardous Air Pollutants (NESHAPS) Issues

1. Section 112 Hazardous Air Pollutants are No Longer Considered Regulated Pollutants Under Prevention of Significant Deterioration (PSD), but NESHAPS Still Apply

Under the 1977 Amendments to the Clean Air Act (Act) and regulations issued thereunder, the PSD requirements of the Act apply to all "major" new sources and "major" modifications, i.e., those exceeding certain annual tonnage thresholds [see 40 CFR 52.21(b)(1)(i) and (b)(2)(i)]. Typically, new sources and modifications become subject to PSD because they exceed the specified tonnage threshold for a criteria pollutant, i.e., a pollutant for which a national ambient air quality standard (NAAQS) has been established under section 109 of the Act. Once a new source or modification is subject to PSD, the PSD requirements apply to every pollutant subject to regulation under the Act that is emitted in "significant" quantities (or, in the case of a major modification, for which there is a significant net emissions increase) [see 40 CFR 52.21(b)(23) and (i)(2)]. Under the 1977 Amendments, best available control technology (BACT) and other PSD requirements apply not only to emissions of criteria pollutants but also to emissions of pollutants regulated under other provisions of the Act, such as section 111 or 112. This regulatory structure was altered by the 1990 Amendments.

Title III of the 1990 Amendments added a new section 112(b)(6) that excludes the hazardous air pollutants listed in section 112(b)(1) of the revised Act (as well as any pollutants that may be added to the list) from the PSD (and other) requirements of Part C. Thus, because they are on the initial Title III hazardous air pollutants list, the following pollutants, which had been regulated under PSD because they were covered by the section 112 NESHAPS or section 111 new source performance standards (NSPS) program, are now exempt from Federal PSD applicability:

- arsenic
- asbestos
- benzene (including benzene from gasoline)
- beryllium
- hydrogen sulfide (H_2S)
- mercury
- radionuclides (including radon and polonium)
- vinyl chloride.

The Title III exemption applies to final Federal PSD permits (i.e., those issued in final form and for which administrative appeals, if any, under 40 CFR 124.19 have been exhausted) issued on or after the date of enactment of the 1990 Amendments (November 15, 1990). For Federal PSD permit applications now under review by either an EPA Regional Office or a delegated State, PSD permit requirements do not apply to the pollutants exempted by Title III. For Federal PSD permits containing PSD requirements for the pollutants exempted by Title III issued on or after November 15, 1990, the permittee may request a revision (e.g., removal of a BACT limit for benzene) to their PSD permit to reflect the Title III exemption from Federal PSD applicability.

Note that pursuant to section 116 and the preservation clause in section 112(d)(7) of the amended Act, States with an approved PSD program may continue to regulate the Title III hazardous air pollutants now exempted from Federal PSD by section 112(b)(6) if the State PSD regulations provide an independent basis to do so. These State rules would remain in effect unless a State revised them to provide similar exemptions. Additionally, the Title III pollutants continue to be subject to any other applicable State and Federal rules; the exclusion is only for Part C rules.

Finally, section 112(q) retains existing NESHAPS regulations by specifying that any standard under section 112 in effect prior to the date of enactment of the 1990 Amendments shall remain in force and effect after such date unless modified as provided in the amended section. Therefore, the requirements of 40 CFR 61.05 to 61.08, including preconstruction permitting requirements, for new and modified sources subject to existing NESHAPS regulations are still applicable.

In summary, the pollutants currently regulated under the Act as of March 1991 that are still subject to Federal PSD review and permitting requirements are:

- carbon monoxide
- nitrogen oxides
- sulfur dioxide
- particulate matter and PM-10
- ozone (volatile organic compounds)
- lead (elemental)
- fluorides
- sulfuric acid mist
- total reduced sulfur compounds (including H_2S)
- CFC's 11, 12, 112, 114, 115

- halons 1211, 1301, 2402
- municipal waste combustor (MWC) acid gases, MWC metals and MWC organics.

2. **Hazardous Air Pollutants that are Regulated as One Component of a More General Pollutant Under Other Provisions of the Clean Air Act are Still Regulated**

Any hazardous air pollutants listed in section 112(b)(1) which are regulated as constituents of a more general pollutant listed under section 108 of the Act are still subject to PSD as part of the more general pollutant, despite the exemption in Title III. For example, volatile organic compounds (VOC's) (a term which includes benzene, vinyl chloride, methanol, toluene, methyl ethyl ketone, and thousands of other compounds) are still regulated as VOC's (but not as individual pollutants such as benzene, etc.) under the PSD regulations because these pollutants are ozone precursors, not because they are air toxics. Also, particulates (including lead compounds and asbestos) are still regulated as particulates (both PM-10 and particulate matter) under the PSD regulations. Lead compounds are exempt from Federal PSD by Title III, but the elemental lead portion of lead compounds (as tested for in 40 CFR Part 60, Appendix A, Method 12) is still considered a criteria pollutant subject to the lead NAAQS and still regulated under PSD.

3. Toxic Effect of Unregulated Pollutants Still Considered in BACT Analysis

Based on the remand decision on June 3, 1986 by the EPA Administrator in North County Resource Recovery Associates (PSD Appeal No. 85-2), the impact on emissions of other pollutants, including unregulated pollutants, must be taken into account in determining BACT for a regulated pollutant. When evaluating control technologies and their associated emissions limits, combustion practices, and related permit terms and conditions in a BACT proposal, the applicant must consider the environmental impacts of all pollutants not regulated by PSD. Once a project is subject to BACT due to the emission of nonexempted pollutants, the BACT analysis should therefore consider all pollutants, including Title III hazardous air pollutants previously subject to PSD, in determining which control strategy is best.

PSD Class I Boundary Issues

1. PSD Applicability Coverage Changes as Class I Area Boundaries Change

Sections 162(a) and 164(a) of the amended Act specify that the boundaries of areas designated as Class I must now conform to all boundary changes at such parks and wilderness areas made since August 7, 1977 and any changes that may occur in the future. The EPA does not believe that Congress intended to create the turmoil which would occur if this redesignation required the modification of permits issued between August 7, 1977 and November 15, 1990, or the resubmission and reevaluation of complete permit applications submitted prior to enactment of the 1990 Amendments. Thus, for this reason, applications considered complete prior to November 15, 1990 should be processed as submitted without regard to the new Class I area boundaries. Exceptions to this general policy are in the areas of increment consumption and air quality related values (including visibility), as discussed below.

For an applicant who submitted a complete PSD application prior to November 15, 1990, if all other PSD requirements are met, a permit may be issued based on the Class I analysis as submitted in the application, unless the reviewing authority finds, on a case-by-case basis, that additional analysis is needed from the applicant to address suspected adverse impacts or increment consumption problems due to the expanded boundaries of the Class I areas. Any existing increment violations in the new boundaries of Class I areas must be remedied through a SIP revision pursuant to 40 CFR 51.166(a)(3).

The PSD applications not considered complete before November 15, 1990 must consider the impact of both existing sources and the new or modified source on the Class I areas as defined by the 1990 Amendments. Thus, the complete application must consider the impacts on the entire Class I area based upon the boundaries in existence on the date of submittal of a complete application; as before, if a Class I boundary changes before the permit is issued, the reviewing authority may find, on a case-by-case basis, that additional analysis is needed from the applicant to address suspected adverse impacts or increment consumption problems due to expanded Class I area boundaries.

NSR Nonattainment Issues

1. NSR Construction Permit Requirements in Nonattainment Areas

In many States, the existing approved Part D permit program by its terms covers all designated nonattainment areas in the State, so a Part D permit program will automatically apply to the new and expanded nonattainment areas which are established under provisions of Title I of the 1990 Amendments. Thus, until new rules are adopted for these new or expanded nonattainment areas, States should apply the requirements of their existing approved Part D permit program. However, in other States, a Part D program may be limited to specified areas and does not apply to new or expanded areas. In these areas, States must implement a transitional permitting program until their existing Part D programs are revised to meet the requirements of the 1990 Amendments and expanded to cover all nonattainment areas in the State. Otherwise, both the goals of Part D and Congress' intent in creating new or expanded nonattainment areas will be frustrated.

The EPA regulations already provide for these new or expanded designated nonattainment areas because the Emission Offset Interpretative Ruling (40 CFR Part 51, Appendix S) governs permits to construct between the date of designation and the date an approved Part D plan is made applicable to the new nonattainment area [see 40 CFR 52.24(k)]. Until a State's new Part D plan is approved by EPA, if a State wishes to issue a permit for a major stationary source or major modification in a new or expanded designated nonattainment area, the State should comply with the requirements of Appendix S. Among other things, Appendix S requires a major source seeking to locate in a nonattainment area to (1) meet the lowest achievable emission rate for such source, (2) provide offsets from existing sources in the area, and (3) show that the offsets will provide a positive net air quality benefit (see 40 CFR Part 51, Appendix S, section IV.A). The EPA believes that in order to carry out the intent of Appendix S, offsets should be required for sources in all categories and in all instances should be calculated on a tons per year basis (see 40 CFR Part 51, Appendix S, section IV.C).

Of course, neither Appendix S nor the existing NSR rules incorporate the NSR changes mandated by Title I of the 1990 Amendments such as lower source applicability thresholds, increased emissions offset ratios, new definitions of major stationary source, and (for ozone nonattainment areas) requirements for nitrogen oxides (NOx)

control and NOx emissions offsets. However, the 1990 Amendments require States to submit to EPA new NSR permit program rules for ozone nonattainment areas by November 15, 1992; for PM-10 nonattainment areas by June 30, 1992; and for most carbon monoxide (CO) nonattainment areas no later than 3 years from the date of the nonattainment designation. The EPA interprets this as an expression of congressional intent not to mandate that States adhere to the more stringent Title I NSR requirements in nonattainment areas during the time provided for State implementation plan (SIP) development. Thus, for NSR permitting purposes in nonattainment areas, the new NSR requirements in Title I are not in effect until the States, as required by the Act, adopt NSR permit program rules to implement the Title I provisions. In addition, EPA encourages any State having adequate authority for early implementation of the NSR changes to do so as soon as possible.

If States fail to submit to EPA the new NSR permit program rules for nonattainment areas by the deadlines in the amended Act, EPA intends to impose in these nonattainment areas a Federal implementation plan (FIP) embodying such requirements. Currently, EPA intends to propose revised NSR regulations at 40 CFR Part 52 that would implement the new Title I NSR requirements under a FIP in a State if that State's revised NSR rules to implement Title I are not submitted in approvable form to EPA and made effective within the State by the deadlines established by the 1990 Amendments.

The area designation in effect on the date of permit issuance by the reviewing agency determines which regulations (Part C or Part D) apply to that permit. In other words, the PSD permit regulations apply to pollutants for which the area is designated as attainment or unclassifiable, and the NSR nonattainment permit regulations apply to pollutants for which the area is designated nonattainment [see 40 CFR 51.166(i)(3) and (5); and 40 CFR 52.21(i)(3) and (5)]. Under these regulations, a PSD permit for a pollutant cannot be issued in an area that is designated nonattainment for that pollutant. For the situation where a source receives a PSD or other permit prior to the date the area is designated as nonattainment, the permit remains in effect as long as the source commences construction within 18 months after the date of nonattainment designation of the area, does not discontinue construction for more than 18 months, and completes construction within a reasonable time [see 40 CFR 52.24(g) and (k)]. Although the PSD regulations provide for extension of these deadlines, no extension would be appropriate where the area has been designated as nonattainment following permit issuance. Accordingly, if

any of these construction provisions are not met, the PSD permit or other permit will not be extended, and the source (if subject to the nonattainment provisions) must obtain a nonattainment permit prior to commencing (or continuing) construction.

The 1990 Amendments create some new and expanded nonattainment areas by operation of law. Other nonattainment area changes are expected as the States and EPA complete the designation process prescribed in amended section 107(d). Because of these provisions, the dates areas switch from attainment to nonattainment for NSR purposes vary by pollutant. However, except for the two instances where the Amendments create changes by operation of law, the new designations and expanded boundaries will not be effective for NSR purposes until EPA promulgates the changes. The promulgations will be announced in the Federal Register.

Congress create new PM-10 nonattainment areas through designations that became effective upon enactment of the 1990 Amendments on November 15, 1990 [see section 107(d)(4)(B)]. Specifically, Congress designated Group I areas and areas where violations of the PM-10 NAAQS had occurred prior to January 1, 1989 as nonattainment. The EPA published a list of these PM-10 areas in a Federal Register notice (see 55 FR 45799, October 31, 1990; see also 52 FR 29383, August 7, 1987). The EPA plans to publish a notice in the Federal Register listing these areas as nonattainment in the near future, but they are already considered nonattainment areas as of November 15, 1990.

Similarly, the 1990 Amendments expand by operation of law some CO and ozone nonattainment areas. However, these changes did not become effective with passage but rather on December 30, 1990. The specifics are as follows:

> Section 107(d)(4)(A)(iv) of the amended Act provides that, with the exception explained below, ozone and CO nonattainment areas located within metropolitan statistical areas (MSA) and consolidated metropolitan statistical areas (CMSA) which are classified as serious, severe, or extreme for ozone or as serious for CO are automatically expanded to include the entire MSA or CMSA. This expansion became effective by operation of law 45 days after enactment unless the Governor submitted a notice by this deadline of the State's intent to seek a modification of the expanded boundaries pursuant to the procedures set forth in section 107(d)(4)(A)(v). So if a

State did not provide this notice, the nonattainment boundaries of all serious, severe, and extreme ozone nonattainment areas in the State and all serious CO areas in the State expanded to include the entire MSA or CMSA on December 30, 1990. If a State did provide timely notice, the Administrator has up to 14 months from enactment to resolve the State's challenge. Until EPA promulgates a resolution of the State's challenge, the old boundaries remain in effect.

Except for these two cases where new or expanded boundaries have been created by operation of law, nonattainment area changes will not be considered effective until the changes are promulgated by the EPA. As to most new areas or expansions of previously-designated nonattainment areas, this will occur 240 days after enactment [see section 107(d)(4)(A)(i) and (ii)]. Newly-created ozone and CO nonattainment areas will be considered part of a designated nonattainment area for NSR purposes at the time of promulgation.

2. Status of Construction Bans

Pursuant to section 110(n)(3), an existing construction ban that was imposed due to the absence of approved Part D NSR rules remains in effect until a revised NSR SIP is approved. Existing construction bans imposed due to disapproval of primary sulfur dioxide NAAQS attainment plans also remain in effect. A Federal Register notice will be published soon announcing the status of construction bans in general and also lifting specific bans where appropriate. Should a construction ban be lifted in any area designated as nonattainment, and the area lacks an approved Part D NSR rule, the State should meet the requirements of 40 CFR Part 51, Appendix S, in issuing permits to major new sources or major modifications prior to the adoption of NSR rules meeting the requirements of the 1990 Amendments.

3. Federal Implementation Plans Remain in Effect

The NSR permitting program in an existing FIP remains in effect until a SIP is approved or a revised FIP is adopted.

4. Use of Previously-Approved Growth Allowances is Prohibited

Section 173(b) invalidates growth allowances in existing SIP's in areas that received a SIP call prior to enactment of the 1990 Amendments, or that receive one thereafter. For NSR permits issued on or after November 15, 1990, previously-approved growth allowances cannot be used

in these areas. Construction permits cannot be issued in SIP-call areas under existing EPA-approved Part D programs to the extent that such permits rely on previously-approved growth allowances. Case-by-case emission offsets must be obtained for any such permits, and other existing Part D requirements must be met.

5. Existing NSR Permitting Rules Continue to Apply in the Northeast Ozone Transport Region (NOTR)

The 1990 Amendments establish a single ozone transport region comprised of the States of Connecticut, Delaware, Maine, Maryland, Massachusetts, New Hampshire, New Jersey, New York, Pennsylvania, Rhode Island, Vermont, and the CMSA that includes the District of Columbia and part of the State of Virginia. For this transport region, including all attainment areas within its boundaries, new section 184(b)(2) specifies that any stationary source that emits or has the potential to emit at least 50 tons per year of VOC's shall be considered a major stationary source and subject to the requirements which would be applicable to major stationary sources if the area were classified as a moderate ozone nonattainment area. For NSR purposes, the requirements of section 184(b)(2) are not in effect in a State until the State submits a new or revised SIP that includes the requirements (or EPA imposes a FIP implementing those requirements). A State in the NOTR has until November 15, 1992 to submit to EPA the new or revised NSR rules addressing the new requirements.

195

Lieutenant Commander, U.S. Coast Guard, project attorney, Ninth Coast Guard District Legal Office.

[illegible]ussion of Regulations

[illegible]e International Bay City River Roar will be conducted on the Saginaw River between the Liberty Bridge and the Veterans Memorial Bridge on the 12th, 13th, and 14th of July 1991. This event will have an estimated 70 hydroplanes which could pose hazards to navigation in the area. Any vessel desiring to transit the regulated area may do so only with prior approval of the Patrol Commander (Officer in Charge, U.S. Coast Guard Station Saginaw River, MI.).

Economic Assessment and Certification

This regulation is considered to be non-major under Executive Order 12291 on Federal Regulation and nonsignificant under Department of Transportation regulatory policies and procedures (44 FR 11034; February 26, 1979). The economic impact has been found to be so minimal that a full regulatory evaluation is unnecessary. This event will draw a large number of spectator craft into the area for the duration of the event. This should have a favorable impact on commercial facilities providing services to the spectators. Any impact on commercial [illegible]c in the area will be negligible. [illegible]nce the impact of this regulation is expected to be minimal, the Coast Guard certifies that it will not have a significant economic impact on a substantial number of small entities.

Federalism

This action has been analyzed in accordance with the principles and criteria contained in Executive Order 12612, and it has been determined that this rulemaking does not have sufficient federalism implications to warrant the preparation of a Federalism Assessment.

List of Subjects in 33 CFR Part 100

Marine safety, Navigation (water).

Final Regulations

In consideration of the foregoing, part 100 of title 33, Code of Federal Regulations, is amended as follows:

1. The authority citation for part 100 continues to read as follows:

Authority: 33 U.S.C. 1233; 49 CFR 1.46 and 33 CFR 100.35.

2. Part 100 would be amended to add a [illegible]porary section 100.35–T0918 to read [illegible]llows:

§ 100.35–T0918 International Bay City River Roar, Saginaw River, Bay City, MI.

(a) *Regulated Area.* That portion of the Saginaw River from the Liberty Bridge on the north to the Veterans Memorial Bridge on the south.

(b) *Special Local Regulations.*

(1) The above area will be closed to navigation and anchorage, except when expressly authorized by the Coast Guard Patrol Commander, from 9:30 a.m. (EDST) until 4 p.m. (EDST) on 12 July 1991, from 9:30 a.m. (EDST) until 4:30 p.m. (EDST) on 13 July 1991, and from 8:30 a.m. (EDST) until 5:30 p.m. (EDST) on 14 July 1991.

(2) If the weather on 14 July 1991 is inclement, the river closure will be postponed until 8:30 a.m. (EDST) until 5:30 p.m. (EDST) on 15 July 1991. If postponed, notice will be given on 14 July 1991 over the U.S. Coast Guard Radio Net.

(3) The Coast Guard will patrol the regulated area under the direction of a designated Coast Guard Patrol Commander. The Patrol Commander may be contacted on channel 16 (156.8 MHZ) by the call sign "Coast Guard Patrol Commander". Any vessel, not authorized to participate in the event, desiring to transit the regulated area may do so only with prior approval of the Patrol Commander and when so directed by that officer. Transiting vessels will be operated at bare steerageway, and will exercise a high degree of caution in the area.

(4) The Patrol Commander may direct the anchoring, mooring, or movement of any boat or vessel within the regulated area. A succession of sharp, short signals by whistle or horn from vessels patrolling the area under the direction of the U.S. Coast Guard Patrol Commander shall serve as a signal to stop. Any vessel so signaled shall stop and shall comply with the orders of the Patrol Commander. Failure to do so may result in expulsion from the area, citation for failure to comply, or both.

(5) The Patrol Commander may establish vessel size and speed limitations, and operating conditions.

(6) The Patrol Commander may restrict vessel operation within the regulated area to vessels having particular operating characteristics.

(7) The Patrol Commander may terminate the marine event or the operation of any vessel at any time it is deemed necessary for the protection of life and property.

Dated: March 5, 1991.

G.A. Penington,

Rear Admiral, U.S. Coast Guard, Commander, Ninth Coast Guard District.

[FR Doc. 91–6221 Filed 3–14–91; 8:45 am]

BILLING CODE 4910–14–M

ENVIRONMENTAL PROTECTION AGENCY

40 CFR Part 81

[AD–FRL–3913–12]

Designations and Classifications for Initial PM–10 Nonattainment Areas

AGENCY: Environmental Protection Agency (EPA).

ACTION: Notice announcing designations and classifications for initial PM–10 nonattainment areas.

SUMMARY: Under section 107(d)(4)(B) of the Clean Air Act (Act) as amended by the Clean Air Act Amendments of 1990 (Pub. L. No. 101–549, November 15, 1990), certain areas were designated as nonattainment for the pollutant PM–10 by operation of law upon enactment of the Amendments. These areas include "Group" I areas identified at 52 FR 29383 (August 7, 1987) and as subsequently clarified at 55 FR 45799 (October 31, 1990). Other areas (i.e., Group II or III areas) containing sites for which air quality monitoring data showed a violation of the national ambient air quality standards (NAAQS) for PM–10 prior to January 1, 1989 were also designated nonattainment for PM–10 by operation of law upon enactment. All other areas were designated unclassified for PM–10 by operation of law. By this notice, EPA is announcing, as required by section 107(d)(2) of the amended Act, all of those areas that were designated nonattainment for PM–10 by operation of law on November 15, 1990.

By this notice, EPA is also announcing, as required by section 188(a) of the amended Act, that all of the areas designated nonattainment for PM–10 by operation of law upon enactment of the Amendments were classified as moderate nonattainment areas at that time. In accordance with section 189(a)(2), States must submit State implementation plans (SIP's) for these areas by November 15, 1991.

DATES: Written comments on this notice must be received by April 15, 1991 at the address below.

EFFECTIVE DATE: These actions will become effective on May 14, 1991.

ADDRESSES: Written comments on this action should be addressed to Larry D. Wallace, Particulate Matter Programs Section, Air Quality Management Division (MD–15), Office of Air Quality Planning and Standards, U.S. Environmental Protection Agency, Research Triangle Park, NC 27711.

The air quality monitoring data supporting the nonattainment designation of the former Group II and III areas monitoring violations of the PM–10 NAAQS prior to January 1, 1989 are available from the respective EPA Regional Office which serves the State where the affected area is located. The addresses of the Regional Offices are as follows:

- State Air Programs Branch, EPA Region I, J.F.K. Federal Building, Boston, MA 02203–2211
- Air Programs Branch, EPA Region II, 26 Federal Plaza, New York, NY 10278
- Air Programs Branch, EPA Region III, 841 Chestnut Building, Philadelphia, PA 19107
- Air Programs Branch, EPA Region IV, 345 Courtland Street, NE., Atlanta, GA 30365
- Air and Radiation Branch, EPA Region V, 230 South Dearborn Street, Chicago, IL 60604
- Air Programs Branch, EPA Region VI, 1445 Ross Avenue, Dallas, TX 75202–2733
- Air Branch, EPA Region VII, 726 Minnesota Avenue, Kansas City, KS 66101
- Air Programs Branch, EPA Region VIII, 999 18th Street, Denver Place—Suit 500, Denver, CO 80202–2405
- Air Programs Branch, EPA Region IX, 75 Hawthorne Street, San Francisco, CA 94105
- Air Programs Branch, EPA Region X, 1200 Sixth Avenue, Seattle, WA 98101

FOR FURTHER INFORMATION CONTACT: Larry D. Wallace, Particulate Matter Programs Section, Air Quality Management Division, Office of Air Quality Planning and Standards, U.S. Environmental Protection Agency, (919) 541–0906 or FTS 629–0906 and at the address indicated above.

SUPPLEMENTARY INFORMATION:

I. Background

A. 1987 Revision of the NAAQS for Particulate Matter

On July 1, 1987, EPA revised the NAAQs for particulate matter, replacing total suspended particulates (TSP) as the indicator for particulate matter with a new indicator that included only those particles with an aerodynamic diameter less than or equal to a nominal 10 micrometers (called "PM–10") (52 FR 24634). At the same time, EPA set forth regulations for implementing the revised particulate matter standards and announced EPA's SIP development policy on PM–10 control strategies necessary to assure attainment and maintenance of the PM–10 NAAQS (see generally 52 FR 24672). The EPA adopted a PM–10 SIP development policy dividing all areas of the country into three categories based on their probability of violating the new NAAQS: (1) Areas with a strong likelihood of violating the PM–10 NAAQS and requiring substantial SIP adjustment were placed in Group I, (2) areas where attainment of the PM–10 NAAQS was possible and existing SIP's needed less adjustment were placed in Group II, (3) areas with a strong likelihood of attaining the PM–10 NAAQS and therefore needing adjustment only to their preconstruction review program and monitoring network were placed in Group III (52 FR 24672, 24679–24682).

B. Prior Listing of and Modification to PM–10 Groups I, II, and III Areas

In accordance with the standards, policies, and regulations published on July 1, 1987 for revising and implementing the new particulate matter standards, EPA identified and listed the Group I and Group II areas in each State in a notice published on August 7, 1987 (52 FR 29383). That notice also indicated that any area of the country not listed as Group I or II was placed in Group III (52 FR 29383).

The EPA subsequently modified the listing for three areas and announced these revisions in a notice published on March 28, 1989 (54 FR 12620). Specifically, the 1989 notice indicated that Porter County, Indiana, was changed from Group I to Group II; Mono Basin, California, was changed from Group III to Group II; and Sandpoint, Idaho, was changed from Group I to Group II.

On October 31, 1990, EPA published technical corrections clarifying the boundaries of concern for some of the areas previously identified as Groups I and II areas (55 FR 45799). When EPA listed the initial groupings for areas in the August 1987 notice, the Groups I and II areas of concern were generally described as cities, towns, counties, or planning areas. The EPA indicated at that time that these descriptions were only the initial definitions of the areas to be investigated in the SIP development process and would be better defined later. The clarifications to the Groups I and II areas announced in October 1990 specifically defined and delineated the boundaries of the Groups I and Group II areas in question based on information obtained in the SIP development process and EPA guidelines and procedures for determining particulate matter boundaries. With respect to Group II areas, the October 1990 notice also set forth those areas containing a site for which air quality monitoring data showed a violation of the NAAQS prior to January 1, 1989.[1]

II. Today's Action

In the 1990 Amendments to the Clean Air Act, Congress used the PM–10 grouping scheme as the starting point for designating areas on nonattainment and unclassifiable for PM–10 by operation of law upon enactment of the Amendments. Group I areas identified in 52 FR 29383 (August 7, 1987) and as subsequently clarified in 55 FR 45799 (October 31, 1990) were designated nonattainment for PM–10 by operation of law [2] [see section 107(d)(4)(B)(i) of the amended Act]. Any other area (i.e., Group II or III areas) containing a site for which air quality monitoring data showed a violation of the NAAQS for PM–10 prior to January 1, 1989 was also designated nonattainment for PM–10 by operation of law upon enactment [see 107(d)(4)(B)(ii) of the amendment Act]. All other areas were designated unclassifiable for PM–10 by operation of law [see 107(d)(4)(B)(iii) of the amended Act]. By this notice, EPA is announcing, as required by section 107(d)(2) of the amended Act, all of those areas that were designated nonattainment for PM–10 by operation of law on November 15, 1990.

Section 188(a) of the amended Act provides that those areas designated nonattainment for PM–10 upon enactment of the 1990 Clean Air Act Amendments were, by operation of law, classified as moderate PM–10 nonattainment areas at the time of their designation as nonattainment. By this notice, EPA is also announcing, as required by section 188(a) of the amended Act, that all of the areas designated as nonattainment for PM–10 by operation of law upon enactment of the Amendments were classified as moderate nonattainment areas at that time.

For administrative efficiency reasons, EPA will defer the ministerial act of formally codifying these PM–10 designations and classifications in 40 CFR part 81 until EPA codifies designations and classifications for other pollutants sometime within the next few months. This notice is provided now in order to make the announcements required by sections 107(d)(2) and 188(a) of the revised Act and to ensure that SIP development for

[1] Footnote 4 of the October 31, 1990 notice references Group II areas with violations of the PM–10 NAAQS.

[2] The notice published on October 31, 1990 (55 FR 45799) reflects the revisions announced in the notice published on March 28, 1989 (54 FR 12620).

the new PM–10 nonattainment areas proceeds in a timely fashion.

Neither of these actions is subject to the APA requirements for notice-and-comment rulemaking (5 U.S.C. 553–557) or section 307(d) of the amended Clean Air Act.[3] Regarding designations, section 107(d)(2) of the amended Act requires the Administrator to publish a notice announcing designations occurring pursuant to section 107(d)(4), but explicitly provides that such announcement is not subject to APA notice-and-comment rulemaking procedures. Thus, Congress has expressly exempted the announcement of those areas designated nonattainment for PM–10 by operation of law under section 107(d)(4)(B) from the notice-and-comment procedural requirements of the APA.

Regarding classifications, section 188(a) of the amended Act requires the Administrator to publish a notice announcing the classifications of these areas. Section 188(a) explicitly states that the provisions of section 172(a)(1)(B) pertaining to lack of notice and comment and judicial review shall apply when the Administrator announces these classifications. Section 172(a)(1)(B), in turn, expressly exempts the classification announcement from the notice-and-comment procedures set forth in 5 U.S.C. 553–557 of the APA.

Nevertheless, for the purpose of providing an opportunity for public participation and avoiding error, EPA will entertain any comments on these actions that are received by April 15, 1991. The EPA's announcement of these actions [for purposes of sections 107(d)(2) and 188(a)] will become effective on May 14, 1991. This will provide enough time for EPA to make any adjustments to the announcement that are appropriate in light of the comments.

III. Initial PM–10 Nonattainment Areas

The following list identifies all of those areas designated as nonattainment for PM–10 on November 15, 1990, upon enactment of the Clean Air Act Amendments of 1990. The EPA also announces, pursuant to section 188(a) of the amended Act, that all of these areas were classified as moderate by operation of law upon enactment of the Amendments.

PM–10 Initial Nonattainment Areas [1,2]

State and counties	Area of Concern
Alaska:	
Anchorage	Community of Eagle River.
Juneau	City of Juneau: Mendenhall Valley area.
Arizona:	
Cochise	Paul Spur/Douglas planning area: Township 23 south, Range 25 east (T23S, R25E); T23S, R26E; T24S, R25E; T24S, R26E; T23S, R27E; T24S, R27E; T23S, R28E; T24S, R28E.
Santa Cruz	Nogales planning area: The portions of the following Townships which are within the State of Arizona and lie east of 111° longitude: T23S, R13E; T23S, R14E; T24S, R13E; T24S, R14E;
Pima	Rillito planning area: Townships: T11S, R9E; T11S, R10E; T11S, R11E; T11S, R12E; T12S, R8E; T12S, R9E; T12S, R10E; T12S, R11E; T12S; R12E; Ajo planning area: Township T12S, R6W, and the following sections of Township T12S, R5W: a. Sections 6–8 b. Sections 17–20, and c. Sections 29–32
Maricopa and Pinal	Phoenix planning area: The rectangle determined by, and including, T6N, R3W; T6N, R7E; T2S, R3W; T2S, R7E; T1N; R8E
Yuma	Yuma planning area: Townships: T7S–R21W, R22W; T8S–R21W, R22W, R23W, R24W; T9S–R21W, R22W, R23W, R24W, R25W; T10S–R21W, R22W, R23W, R24W, R25W.
Pinal and Gila	Hayden/Miami planning area: Townships: T4S, R16E T5S, R16E T6S, R16E plus the portion of Township T3S, R16E that does not lie on the San Carlos Indian Reservation, and the rectangle formed by, and including, Townships: T1N, R13E; T1N, R15E T6S, R13E; T6S, R15E
California:	
Inyo	Owens Valley planning area: Hydrologic Unit #18090103.
San Bernardino, Inyo, and Kern	Searles Valley planning area: Hydrologic Unit #1809005.
Mono	Mammoth Lake planning area: Includes the following sections: a. Sections 1–12, 17, and 18 of Township T4S, R28E; b. Sections 25–36 of Township T3S, R28E; c. Sections 25–36 of Township T3S, R27E; d. Sections 1–18 of Township T4S, R27E; and e. Sections 25 and 36 of Township T3S, R26E
Fresno, Kern, Kings, Tulare, San Joaquin, Stanislaus, Madera.	San Joaquin Valley planning area.
Riverside, Los Angeles, Orange, and San Bernardino.	South Coast Air Basin.
Riverside	Coachella Valley planning area.
Imperial	Imperial Valley planning area.
Colorado:	
Archuleta	Pagosa Springs.

[1] Regarding section 307(d) requirements, today's actions are not among the actions listed in section 307(d)(1) of the amended Act as being subject to the procedural requirements of section 307(d), nor has the Administrator designated these actions as 307(d)(1)(U) of the amended Act.

PM-10 INITIAL NONATTAINMENT AREAS [1,2]—Continued

State and counties	Area of Concern
Adams, Denver, Arapahoe, Jefferson, Douglas, and Boulder.	Denver Metropolitan area: All of Denver, Jefferson, and Douglas Counties, Boulder County (excluding the Rocky Mountain National Park) and the Colorado automobile inspection and readjustment program portions of Adams and Arapahoe Counties.
San Miguel	Telluride.
Prowers	Lamar
Pitkin	Aspen.
Fremont	Canon City.
Connecticut:	
New Haven	City of New Haven.
Idaho:	
Ada	Boise: Northern Boundary—Beginning at a point in the center of the channel of the Boise River, where the line between sections 15 and 16 in township 3 north (T3N), range 4 east (R4E), crosses said Boise River; thence, west down the center of the channel of the Boise River to a point opposite the mouth of More's Creek; thence, in a straight line north 44 degrees and 38 minutes west until the said line intersects the north line of T5N (12 Ter. Ses. 67); thence, west to the northwest corner T5N, R1W; Western Boundary—Thence, south to the northwest corner of T3N, R1W; thence, east to the northwest corner of section 4 of T3N, R1W; thence, south to the southeast corner of section 32 of T2N, R1W; thence, west to the northwest corner of T1N, R1W; thence, south to the southwest corner of section 32 of T2N, R1W; thence, west to the northwest corner of T1N, R1W; thence, south to the southwest corner of T1N, R1W; Southern Boundary—Thence, east to the southwest corner of section 33 of T1N, R4E; Eastern Boundary—Thence, north along the north and south center line of Townships T1N, R4E, T2N, R4E, and T3N, R4E, Boise Meridian to the beginning point in the center of the channel of the Boise River.
Shoshone	City of Pinehurst.
Bannock and Power	City of Pocatello.
Bonner	County.
Illinois:	
Cook	a. Lyons Township b. The area bounded on the north by 79th Street, on the west by Route 57, on the south by Sibley Boulevard and on the east by the Illinois/Indiana State line.
LaSalle	Oglesby including the following Townships, ranges, and sections: T32N, R1E, S1; T32N, R2E, S6; T33N, R1E, S24; T33N, R1E, S25; T33N, R2E, S31; and T33N, R1E, S36.
Madison	Granite City Township and Nameoki Township.
Indiana:	
Lake	Cities of East Chicago, Hammond, Whiting, and Gary.
Vermillion	Clinton Township.
Maine:	
Aroostook	City of Presque Isle.
Michigan:	
Wayne	The area bounded by Michigan Avenue from its intersection with I-75 west to I-94, I-94 southwest to Greenfield Road, Greenfield Road south to Schaefer Road, Schaefer Road south and east to Jefferson Avenue, Jefferson Avenue south (Biddle Avenue through the city of Wyandotte) to Sibley Avenue, Sibley Avenue west to Fort Street, Fort Street south to King Road, King Road east to Jefferson Avenue, Jefferson Avenue south to Helen Road, Helen Road east extended to Trenton Channel, Trenton Channel north to the Detroit River, the Detroit River north to the Ambassador Bridge, Ambassador Bridge to I-75, I-75 to Michigan Avenue.
Minnesota:	
Ramsey	The area bounded by the Mississippi River from Lafayette to Route 494, Route 494 east to Route 61, Route 61 north to I-94 I-94 west to Lafayette, and Lafayette south to the Mississippi River.
Olmsted	City of Rochester.
Missouri:	
Audrain	County.
Montana:	
Flathead	The area bounded by lines from Universal Transmercator (UTM) coordinate 700000mE, 5347000mN, east to 704000mE, 5347000mN, south to 704000mE, 5341000mN, west to 703000mE, 5341000mN, south to 703000mE, 5340000mN, west to 702000mE, 5340000mN, south to 702000mE, 5339000mN, east to 703000mE, 5339000mN, south to 703000mE, 5338000mN, east to 704000mE, 5338000mN, south to 704000mE, 5336000mN, west to 702000mE, 5336000mN, south to 702000mE, 5335000mN, west to 700000mE, 5335000mN, north to 700000mE, 5340000mN, west to 695000mE, 5340000mN, north to 695000mE, 5345000mN, east to 700000mE, 5345000mN, north to 700000mE, 5347000mN. Columbia Falls: Township T30N, R20W, Sections 7, 8, 9, 16, and 17.
Lincoln	Libby.
Lake	Ronan, Polson.
Missoula	Township T13N, R19W, sections 2, 8, 11, 14, 15, 16, 17, East 19, 20, 21, 22, 23, 24, 27, 28, 29, East 1/2 30, East 1/2 31 32, 33, 34, and T12N, R19W, section 4, 5, 6, 7.
Rosebud	Lame Deer.
Silver Bow	Butte.
Nevada:	
Washoe	Reno planning area: Hydrographic area 87.
Clark	Las Vegas planning area: Hydrographic Area 212.
New Mexico:	
Dona Ana	The area bounded by Anthony Quadrangle, Anthony, New Mexico—Texas, SE/4 La Mesa 15' Quadrangle, N3200—W10630/ 7.5, Township 26S, Range 3E, Sections 35 and 36 as limited by the New Mexico—Texas State line on the south.
Ohio:	
Cuyahoga	County.
Jefferson	The portion of the City of Steubenville south of Market Street, plus the area bounded on the north by the southern boundary of the City of Steubenville, on the west by Ohio Route #7, on the south by the southern border of Steubenville Township, and on the east by the Ohio/West Virginia border.
Oregon:	
Jackson	Medford-Ashland air quality maintenance area (including White City).
Josephine	Grants Pass: The area within the urban growth boundary.
Lane	Eugene/Springfield: The area within the urban growth boundary.
Klamath	Klamath Falls: The area within the urban growth boundary.
Union	LaGrande: The area within the urban growth boundary.

PM-10 INITIAL NONATTAINMENT AREAS [1,2]—Continued

State and counties	Area of Concern
nnsylvania:	
Allegheny	The area including Liberty, Lincoln, Port Vue, and Glassport Boroughs and the City of Clairton.
Puerto Rico:	
Guaynabo	Municipality of Guaynabo.
Texas:	
Lubbock	That portion of the City of Lubbock enclosed by Loop 289 highway.
El Paso	City of El Paso.
Utah:	
Salt Lake	County.
Utah	County.
Washington:	
King	The portion of the City of Seattle bounded on the east by I-5/East Duwamish Greenbelt, on the south by 104th Street, on the west by the West Duwamish Greenbelt north to Fairmont Avenue, S.W., north on Fairmont to Elliott Bay, and Dearborn Street from Elliott Bay to I-5; The City of Kent and a portion of the Green River valley bounded on east and west by the 100-foot contour, on the north by South 212th Street, and on the south by Highway 516.
Pierce	Tacoma metropolitan area bounded on the north by Marine View Drive from Commencement Bay east to the 100-foot contour, southeast along the 100-foot contour to 64th Avenue East, south along 64th Avenue East extended to I-5, I-5 west to the 100-foot contour near Pacific Avenue, and north along the 100-foot contour to Commencement Bay.
Spokane	The area bounded on the south by a line from Universal Transmercator (UTM) coordinate 489000mE, 5271000mN, west to 458000mE, 5271000mN, thence north along a line to coordinate 458000mE, 5288000mN, thence east to 463000mE, 5288000mN, thence north to 463000mE, 5292000mN, thence east to 481000mE, 5292000mN, thence south to 481000mE, 5288000mN, thence east to 489000mE, 5288000, thence south to the beginning coordinate 489000mE, 5271000mN.
Yakima	The area bounded on the south by a line from Universal Transmercator (UTM) coordinate 694000mW, 5157000mN, west to 681000mW, 5157000mN, thence north along a line to coordinate 681000mW, 5172000mN, thence south to the beginning coordinate 694000mW, 5157000mN.
Thurston	Cities of Olympia, Tumwater, and Lacey.
Walla Walla	Wallula.
West Virginia:	
Brooke	Follansbee area bounded on the north by the Market Street Bridge, on the east by West Virginia Route #2, on the south by the extension of the southern boundary of Steubenville Township in Jefferson County, Ohio, and on the west by the Ohio/West Virginia border.
Wyoming:	
Sheridan	City of Sheridan.

[1] When cities or towns are shown, the area of concern is defined by the municipal boundary limits as of the date of this notice.
[2] When a planning area is shown, the area of concern includes the entire planning area unless the area is further defined (e.g., by township, range, and/or section).

. Significance of Today's Action

By November 15, 1991, States must adopt and submit to EPA a SIP for all those areas that were classified as moderate PM-10 nonattainment areas by operation of law upon enactment of the 1990 Clean Air Act Amendments [see Subpart 4 of Part D of Title I of the Clean Air Act as amended (section 189)]. All of the areas listed above must submit a SIP meeting the general requirements for nonattainment areas identified in section 172 of the amended Act and the requirements specific to PM-10 in Subpart 4 of Part D. In particular, section 189(a) of the amended Act requires that all of the initial moderate PM-10 nonattainment areas submit a SIP by November 15, 1991 which includes the following:

1. Either a demonstration (including air quality modeling) that the plan will provide for attainment by December 31, 1994 or a demonstration that attainment by that date is impracticable.

2. Provisions to assure that reasonably available control measures (including reasonably available control technology) for the control of PM-10 are implemented by December 10, 1993.

In addition, a new source permit rogram meeting the requirements of Part D of the Act is required for the construction and operation of new and modified major stationary sources of PM-10 (including, in some cases, PM-10 precursors). A SIP revision meeting this requirement is due by June 30, 1992 for all of the initial moderate PM-10 nonattainment areas. The EPA will provide additional guidance on SIP requirements for these areas in the near future.

Also note that EPA must take final action by the end of 1991 with respect to which of these initial PM-10 nonattainment areas should be reclassified from moderate to serious because they cannot practicably attain the PM-10 air quality standards by December 31, 1994 [see section 188(b)(1) of the amended Act]. If reclassified as serious, these areas will be subject to additional control requirements and a new attainment date. Since EPA must propose these reclassifications by June 30, 1991, EPA will work with the States before that date in order to develop a proposed list of moderate areas to be reclassified as serious.

V. Authority

Sections 107(d)(4), 110, 188(a), and 301 of the amended Clean Air Act provide authority for today's action.

Dated: March 7, 1991.

Michael Shapiro,

Acting Assistant Administrator for Air and Radiation.

[FR Doc. 91-5987 Filed 3-14-91; 8:45 am]
BILLING CODE 6560-50-M

GENERAL SERVICES ADMINISTRATION

41 CFR Part 301-1 and Ch. 304

[FTR Interim Rule 3]

RIN 3090-AE19

Federal Travel Regulation; Acceptance of Payment From a Non-Federal Source for Travel Expenses

AGENCY: Federal Supply Service, GSA.

ACTION: Interim rule; correction.

SUMMARY: This action corrects an error in a document amending the Federal Travel Regulation which was published March 8, 1991 (56 FR 9878). In the

UNITED STATES ENVIRONMENTAL PROTECTION AGENCY
WASHINGTON, D.C. 20460

MAR 29 1991

OFFICE OF
AIR AND RADIATION

MEMORANDUM

SUBJECT: Revised Compliance Monitoring Strategy

FROM: John Rasnic, Acting Director
Stationary Source Compliance Division
Office of Air Quality Planning and Standards

TO: Air Management Division Directors
Regions I, III and IX

Air and Waste Management Division Director
Region II

Air, Pesticides, and Toxics Management Division Directors
Regions IV and VI

Air and Radiation Division Director
Region V

Air and Toxics Division Directors
Regions VII, VIII and X

Attached is the revised Compliance Monitoring Strategy (CMS). Thank you for the comments submitted on the draft. Comments received were separated into those which concerned issues of policy, and those which concerned the implementation of the policy. The issues concerning the policy were addressed by changing the CMS as appropriate. The issues concerning implementation will be addressed at an upcoming meeting scheduled for May 1991 with the Regional CMS Representatives. In general, the comments assisted the Strategy in becoming an even stronger document and confirmed the EPA commitment to a greater Federal-State partnership.

The Strategy is effective immediately and should be implemented during the FY 1992 grant negotiations.

Table of Contents

I. **Introduction** 1

II **Purpose of the Strategy** 2

III. **Strategy Requirements** 2

A. Sources to be Included 2

B. Minimum Level of Inspection 3

IV. **Inspection Plan Requirements** 4

A. List of Sources to be Inspected 4

B. How the List of Sources were Determined 4

1. Ranking Method 4

2. Multiple Inspections 7

3. Justification of Substitutions 7

4. Reference Level 8

C. Estimated Resource Allocation for Group I and II Sources for the Year Proposed 8

V. **Reporting Requirements** 9

A. CMS Inspection Tracking System 9

B. Evaluation of the Inspection Plan Results 9

VI. **Responsibilities** 10

Technical Appendices

Appendix 1 Summary of Inspection Plan Contents 1-1

Appendix 2 Definition of "greatest environmental impact" 2-1

Appendix 3 CMS Representatives 3-1

Appendix 4 Further Details on the Inspection Targeting Model 4-1

Appendix 5 Inspection Frequency Guidance 5-1

Appendix 6 Inspection Tracking 6-1

Revised Compliance Monitoring Strategy

March 1991

I. Introduction

Based on both State and EPA concerns, the Compliance Monitoring Strategy (CMS) was revised in FY 1991 for implementation in FY 1992. The revised CMS provides a more flexible and systematic approach for determining State[1] inspection commitments. However, the revised CMS continues to emphasize flexibility with accountability. This strategy requires that the Regional Office and State work together to develop a comprehensive Inspection Plan that identifies the objectives and resource requirements of the inspection program, number of sources to be inspected by category (total program), and state inspection commitments. In addition, this Strategy encourages an evaluation of the past fiscal year's inspection program in order to provide useful information in setting next year's objectives for developing an Inspection Plan.

The implementation of CMS since it was issued in 1988 has demonstrated that greater flexibility for setting inspection commitments has produced greater communication and coordination between the Regions and States. This lays the foundation for better inspection planning and more effective monitoring programs. This and other lessons learned from the implementation of CMS have been used to revise and subsequently strengthen the Strategy. This coordination and open negotiation is encouraged and strengthened under the revised CMS.

The goal of CMS is to develop the most environmentally effective inspection program for each State. To accomplish this goal, more open and frequent planning and discussion between the State and EPA is required, which will build a stronger State-Federal partnership. In addition, the revised CMS provides additional guidance on evaluating Inspection Plans and requires the Regional offices to conduct an evaluation of the Inspection Plan.

Recognizing that this Strategy is a significant departure from the Inspection Frequency Guidance (IFG), it is expected to take several years for widespread implementation. For that reason, Headquarters and the Regional CMS Representatives (listed in Appendix 3) will closely monitor the implementation of the CMS to assess progress and to make necessary clarifications and when needed, policy changes.

It is important to note that CMS is an integral component of the Compliance Program Planning Process (Operating) Guidance, which was issued as a draft on March 4, 1991. The Planning Guidance provides the overall procedures and goals of the current EPA and State compliance program planning process. The CMS provides the specific procedures and objectives for the development of Inspection Plans. Further, in keeping with the Planning Guidance

---

[1] means State or Local agency throughout.

The asbestos D & R inspection program should be dealt with separately, as described under the Asbestos Strategy.

The national priorities must be addressed when developing the Inspection Plan. Group I encompasses, but is not exclusively composed of, the national priority categories for FY 1991. Thus, CMS will require that Group I sources be addressed when developing the Inspection Plan. In cases where substitutions of Group II sources for Group I sources are justified, the rationale for the exceptions must be agreed upon by Region and State (see IV., B., 3).

The national priorities, as stated in EPA's Operating Guidance for FY 1991, are listed below. However, it should be noted that national priorities may change from year to year.

- Sources emitting VOC, PM_{10}, SO_2, CO, or NOx in nonattainment areas for the respective pollutant.

- Lead (Pb) SIP and operating non-transitory NESHAP sources.

B. Minimum Level of Inspection

For an on-site visit to a stationary source to be counted as an inspection, it must meet the minimum requirements of a Level 2 inspection, as defined in "The Clean Air Act Compliance/Enforcement Guidance Manual" (Revised 1987), that includes the following minimum activities where appropriate:

1. review of existing records and log books on source operations, hours of operation, VOC-containing compounds usage, emissions test reports, CEM performance test reports, and other records necessary to evaluate compliance with applicable regulations and permits, particularly for the intervening period following the last inspection;

2. record such process items as feed rates, temperatures, raw material compositions, process rates, and such control equipment performance parameters as water flow rates, and pressure, static pressure drops, and electrostatic power levels; and

3. visible emission observations.

The inspection must include an assessment of the compliance status of all units within a source subject to SIP, NSPS, or NESHAP regulations. Certain sources, because of the size of the source or for other reasons, as agreed between the Region and State (see IV., B., 2.), may require multiple inspections to completely determine compliance at all units and under all air programs.

inspectors. These data include plant emissions, compliance information, and air quality factors. The model assigns values to the data, and quantitatively analyzes the values to produce a ranking of sources. The model also allows an inspector to estimate the amount of time he or she will need to spend at each source, and keeps a running total of the time. The sources to be entered in the ITM may be from both Group I and Group II source categories. A State may alternatively choose to enter only its Group I sources in the ITM, and propose substitutions to the ITM rankings of Group I sources during the negotiations. Appendix 4 contains more information on the ITM. Training in the use of the model will be provided at EPA's Regional Offices upon request.

b. Other quantitative analytical tool

A State may rank its sources using a quantitative model other than the ITM, provided there is concurrence from the Regional Office. The alternative quantitative ranking model should target the most environmentally significant sources. Thus, the model should include similar ranking criteria that is used by the ITM, such as compliance history and air quality. As an example, one State is hoping to use its own "prioritization matrix", a quantitative model which they designed. This matrix uses factors such as toxicity, past compliance history, and population in the impact area to rank sources.

As with the ITM, the sources that a State should enter into the model are Group I and Group II. Or, the State may alternatively propose Group II substitutions after the results of the model have been considered, and during negotiations.

c. Qualitative rankings

A State may choose to rank its sources without benefit of a quantitative model. The State can present a list of sources or categories of sources that it proposes to inspect, including the frequency of inspection, and justify its sources qualitatively. The State should be prepared to discuss why it is proposing to inspect certain sources and not others, using criteria such as air quality, compliance history, and emissions.

So that the ranking approach both reflects the true nature of a State's own air quality problems, and provides the flexibility needed to tackle the problem, the CMS encourages that the method be derived using a multi-step process. The following example is given as an illustration of a possible application of this method.

Step 1. Consider the size and complexity of the inventory of Group I and Group II sources.

To facilitate this step, States are asked to submit their inventory of Group I and II sources to the Regional Office well in

Region and State would extract all sources contributing to this area, calculate the amount which could be inspected given the resources available or reference level, and start the negotiations from there.

d. Inspection Frequency Guidance ranking

The State and Regional Office may use the IFG as an interim method to determine inspection commitments. The IFG does not incorporate the ranking criteria (i.e.- environmental significance, compliance history) necessary for satisfying the objectives of this Strategy. Therefore, the IFG is not encouraged as a long-term ranking method. The IFG is described in Appendix 5.

2. Multiple Inspections

CMS recognizes that a number of inspections of various components of an especially large or complex facility are often required to determine compliance of the facility. In addition, some sources have such poor compliance histories that a stronger enforcement presence is required to maintain compliance. For these reasons, multiple inspections at a single source in AFS can be counted and credited, provided that:

a. each reported inspection of a facility or pre-determined facility component meets the minimum requirements of a Level 2 inspection;

b. each inspection has been concurred on by the EPA Regional Office beforehand; and

c. the inspections are conducted on separate visits.

3. Justification of Substitution of Group II Sources for Group I Sources Where it is not Inherent in the Method Used to Rank Sources.

The Group I sources must be addressed. However, should a source which is not of the Group I category be chosen for inspection, this source must be agreed upon by both the Region and State Offices.

As noted earlier, this strategy encourages the inspection of sources of environmental significance regardless of Group I or II CMS classification. Thus, this approach will account for the total compliance monitoring effort including, where mutually agreed upon by Region and State, the substitution of inspections of Group II sources for Group I. It will be necessary to present the rationale for this substitution and to flag, and enter if not previously entered, only the substituted sources in AFS.

V. Reporting Requirements.

A. CMS Inspection Tracking System

The tracking system for CMS stationary sources in Group I is the AIRS/AFS system. As Group II sources are substituted for Group I sources, they are to be entered and subsequently tracked in AIRS/AFS as well. The Regional Offices and States need to track both the number of sources committed to be inspected, and the total number of inspections conducted. Appendix 6 gives a detailed description of the inspection tracking methodology.

B. Evaluation of the Inspection Plan Results.

An analysis of each State's Inspection Plan results will be conducted at the end of each year by the Regional Office. A subsequent national analysis of each Region's year-end results will be conducted by Headquarters. The evaluations will provide the program with the feedback mechanism needed to ensure that the most effective Inspection Plans will be developed the following year based on the strengths and lessons learned from the previous year. The results of the analysis will help EPA and the State to identify and avoid constraints and subsequently implement improvements in the following year's Inspection Plan.

The purpose of the analysis is to measure whether States have met their commitments, and in cases where they did not, determine "why"; and evaluate to the extent possible, the implications of enforcement presence on compliance and air quality.

The criteria to be used in the evaluation may vary among the Regions. However, the criteria should be inclusive of, but not limited to: 1) entire state source inventory of Federal and State regulated sources vis-a-vis number of inspections conducted; 2) change in ambient air quality from previous years vis-a-vis change in source inventory and compliance rates; 3) numbers of inspections by source type vis-a-vis commitments and priorities; and 4) resulting enforcement actions.

For this evaluation, there will be an exchange of the following data at a minimum: total inventory of Group I and II sources. All inventories of Group I sources must be given in a complete format (i.e.- identified by name, county, etcetera). Inventories of Group II sources can be given in either: 1) a complete format, as referenced above; or 2) numbers of sources and their categories (i.e.- sawmill; plating; pulp and paper, etcetera), and number of CMS inspections at each source.

An evaluation provides feedback to both Regions and States for future discussions and thereby enhances chances that the inspection program will be geared towards the most environmentally significant sources.

definition of greatest environmental impact, substitutions, and multiple inspections) with the Regional Office.

In addition, States are responsible for meeting the negotiated commitments, providing the necessary information to the Regional Office to both negotiate the reference level and enable the Regional Office to conduct the evaluation at the end of the year, reporting inspections in a timely manner to the Regional Office, or directly into AFS (for direct user States), and keeping Regional Office staff informed of problems as well as successes in the implementation of CMS.

For Assistance

The Regional CMS Representatives are listed in Appendix 3. The EPA Headquarters contacts for this strategy are Ron Shafer (FTS 398-8698) and Donna Nickerson (FTS 398-8694).

Appendix 1

Summary of Inspection Plan Contents

The Inspection Plan at a minimum should include:

1. State Objectives of the Inspection Plan.

2. Group I sources chosen for inspection, identified by name, and AFS plant identification number.

3. Group II sources chosen for inspection, identified by name, and AFS plant identification number, and confirmed during or by the end of the open season.

4. Description of the method used to rank sources.

5. Brief description of the criteria used to justify substitution of Group II sources for Group I sources.

6. List of sources scheduled for multiple inspections, and numbers of inspections at each source.

7. Estimated resource allocation for Group I and Group II sources.

Appendix 3

CMS Representatives

Enhanced communications will become increasingly important as we continue to implement the CMS. Therefore, a network of Regional Office representatives has been formed to serve as the focal point for discussing and resolving issues related to the implementation of the CMS. Below is a list of the Regional CMS Representatives and their phone numbers.

Region	Representative	Phone No.
I	Arnold Leriche	FTS 835-3264 617 565-3264
II	Jehuda Menczel	FTS 264-6680 212 264-6680
III	Jim Hagedorn	FTS 597-8554 215 597-8554
IV	Tom Lyttle	FTS 257-2904 404 347-2904
V	Lisa Holscher	FTS 886-6818 312 886-6818
VI	Ray Magyar	FTS 255-7229 214 655-7229
VII	Donna Dees	FTS 276-7625 913 551-7625
VIII	Ron Rutherford	FTS 330-1757 303 293-1757
IX	John Kennedy	FTS 556-5384 415 556-5387
X	Sharon Wilson	FTS 399-0205 206 553-0205

occur when the inspectors are completing individual data forms. Our experience has shown that this pre-screening of the inventory may take as little as 10 working days of total agency staff time during the initial year, depending on the size accessibility and completeness of the agency's database. Even less time may be required if electronic data transfer options are used.

- Prepare targeting data forms for each source included on the targeted source list.

Basic source identification information can be compiled by administrative staff using information normally available in agency reports, emissions inventories, and the like. A data form for each source may be partially filled out by administrative staff, then forwarded to inspectors responsible for the individual sources. Automated transfer of data from AIRS (and possibly other State databases) will expedite this task. However, some targeting information must still be provided by inspectors who are most familiar with the sources.

To minimize misinterpretation and inconsistency among inspectors and to ensure maximum efficiency, a half-day meeting or work session should be scheduled to review the data form and answer questions. All inspectors should participate. The forms should then be filled out by the inspectors, and checked by a designated reviewer or manager.

If all inspectors participate, the initial meeting and data form completion process should take no more than 3 working days for each inspector. This process can be expedited by an automated transfer of data from the AIRS AFS database into preprinted targeting dataforms.

- Enter targeting data into the computer.

Targeting data may be entered directly by inspectors, if desired. Many agencies rely on a central coordinator for this task. However, computer entry may also be performed by clerical staff. In this case initial entry should be made by one person, then checked by another person to ensure accuracy.

- Generate ranking.

A ranking may be generated by simple menu driven computer commands. The length of time required to generate the report is dependent on the number of sources and the computer capability. A typical AT processor operating at 12 mh will normally process a 500 source database in less than 5 minutes. The printing of a 500 source ranking report may be generated in 3 to 20 minutes depending on the speed and type of printer and computer. These time requirements are significantly reduced by using a 80386 based computer system.

Summary

The model itself is easy to use for anyone. It was designed for use by inspectors and managers with very limited computer skills. There are written instructions and a help file accessible while data are being input.

When the ranking and estimated inspection times are coupled with the known agency resource base, the sources that should be inspected during the next year can easily be identified, and an annual inspection plan can be developed. This plan can serve the State agency as an effective management tool for its own inspectors as well as serve to meet the EPA's Compliance Monitoring Strategy requirements.

The targeting model is available to all EPA Regions for your testing and familiarization. It is on a floppy disk with accompanying documentation and will be distributed to interested Regions and States. Headquarters will continue to support this activity with on-call technical assistance. Please contact Perrin Quarles Associates if you have any questions relating to this model or need technical assistance with its application. Telephone: (804) 979-3700. Address: 501 Faulconer Drive, Suite 2-D, Charlottesville, Virginia, 22901.

be noted that these requirements for a minimally-acceptable inspection do not require the direct measurement of operating conditions by the inspector.

Class A1 SIP Sources

All operating Class A1 SIP sources regulated under the Clean Air Act shall be inspected annually. Annually is construed to mean at least one onsite visit is made to each such source between October and September, corresponding to the federal fiscal year.

There are four permissible exceptions to the Class A1 annual inspection requirement. The first is for sources whose operations are seasonal in nature (e.g., alfalfa dehydrators) and which do not operate more than 90 days per year. This operating time restriction does not need to be included in a permit for a source to qualify. However, the nature of its business should clearly preclude the source from operating more than 90 days per year. To qualify for this exception, a seasonal source should be well-controlled, should not have a history of noncompliance, and should not be located in a nonattainment area for a pollutant that is the determining pollutant for the Class A1 classification. All seasonal sources must in any event be inspected at least once every five years.

The second category is for Class A1 SIP gas-fired combustion facilities (gas turbines, boilers, and internal combustion sources) which are regulated only for sulfur dioxide emissions and which can operate in compliance with the sulfur dioxide emissions limitations without controls.

The third category is Class A1 NSPS and PSD gas turbines that are regulated only for NOx emissions. An annual compliance determination for these sources can be accomplished through record checks without an annual onsite inspection of equipment.

The last category is oil-fired or coal-fired industrial boilers which are Class A1 SIP sources only because of their sulfur dioxide emissions and which can operate in compliance with the sulfur dioxide emission limitations without either controls or use of low sulfur fuel.

To be excepted, sources in these latter three categories should not have a history of noncompliance. All excepted sources shall be inspected at least once every five years.

Exceptions to the annual inspection requirement should be communicated by the Regional Office to EPA's Stationary Source Compliance Division (SSCD) at the start of the inspection year and the data base properly adjusted by the Regional Offices for subsequent analysis and reporting. Regional Offices are encouraged to discuss with SSCD any novel issues which may arise in their discussions with their States.

Another alternative to an onsite inspection is available for sources whose compliance is based solely on the characteristics of the fuel oil burned (typically percentage of sulfur in the fuel). This alternative is an inspection of the fuel oil supplier's records and a sampling of the supplier's product. To realize the saving of inspector time, a source's fuel oil suppliers must be known and fixed over time. If a source purchases fuel oil from the spot market, has many suppliers, or has suppliers which are not easily monitored by the State, this alternative may not be appropriate.

UC.

UNITED STATES ENVIRONMENTAL PROTECTION AGENCY
WASHINGTON, D.C. 20460

APR 10 1991

Honorable John D. Dingell
Chairman, Subcommittee on
Oversight and Investigations
Committee on Energy and Commerce
House of Representatives
Washington, D.C. 20515

Dear Mr. Chairman:

Thank you for your letter of November 2, 1990 regarding the General Accounting Offices's (GAO) report of September 27, 1990 which is entitled "Air Pollution: Improvements Needed in Detecting and Preventing Violations" (B-233555). We have reviewed the report and noted its findings and recommendations.

The report discusses the Environmental Protection Agency's (EPA) efforts to detect stationary source violations and take appropriate enforcement actions under the Clean Air Act (the Act). The report recommends that EPA: "implement...emission-monitoring policy by developing regulations that (1) establish criteria for determining where monitors are feasible [for major stationary sources], (2) require monitor use at all sources meeting the criteria, (3) require EPA enforcement staff to use available enforcement authority to overfile to the maximum extent possible when States assess inadequate penalties, and (4) undertake efforts to include specific standards for assessing economic benefit penalties in the next revisions to State Implementation Plans (SIPs)." The remainder of this letter addresses the questions and issues you have posed concerning the report's findings.

I. EPA's Ability to Require Authorized Programs to Impose Economic Benefit Penalties

EPA acknowledges the importance of a strong enforcement program and the value of a penalty scheme that serves as a deterrent for violating sources. In order to accomplish this objective, EPA has developed a Clean Air Act Stationary Source Civil Penalty Policy ("penalty policy") to ensure that federal enforcement actions under the Act result in the assessment of a significant financial penalty. This policy mandates, among other things, recovery to the extent possible, of the economic benefit a source may have received through noncompliance with the Act. In accord with its statutory mandate, much of the Act is implemented at the State and local level. Section 101(a)(3) of the Act provides that "the prevention of and control of air

pollution at its source is the primary responsibility of States and local governments." Also Section 110 of the Act explicitly references the primacy of States in the control of air pollution through the implementation of federally enforceable SIPs. Consequently, EPA relies extensively on the States to enforce the provisions of the Act. In working with the States, we recognize the differences that exist among the various States' penalty authorities and the diversity of approaches they bring to their various programs. EPA has attempted to address this problem in several ways. The Agency, in conjunction with the States, has developed comprehensive guidance policies that address the Agency's and the States' mutual expectations regarding what constitutes a timely and appropriate resolution of violations (see EPA's "Revised Policy Framework for State/EPA Enforcement Agreements", August 25, 1986 (Policy Framework) (Enclosure No. 1) and EPA's "Timely and Appropriate Enforcement Response Guidance" for Significant Air Violators, April 11, 1986 (T&A Guidance) (Enclosure No. 2)). Ideally, we would like to see EPA and the States achieve a uniform approach to the imposition of penalties.

The Policy Framework addresses State penalties in several ways. It requires each program to clarify where a penalty or other sanction is an essential part of an enforcement response to a violation to ensure deterrence. The Air Program's guidance does this by requiring a penalty for all significant non-compliance (SNC). However, it also indicates under criterion #6 that States should, at a minimum, calculate economic benefit and are encouraged to assess that amount at a minimum. They are also encouraged to adopt formal penalty policies, or at a minimum describe to EPA how their penalty authorities or other sanction authorities will be used to create the necessary deterrence.

Additionally, the Policy Framework requires States to maintain accessible summaries of penalty assessments and use of related sanctions for use by Regions in oversight of this aspect of the program, while promising that penalty practices will be reviewed in the context of the whole program. Finally, it clearly states that EPA will pursue its own enforcement action if a State fails to obtain a penalty where defined as appropriate or if its penalty was grossly deficient under the circumstances, considering among other factors, the relation of the penalty to the economic benefit of non-compliance.

Furthermore, EPA continues to provide support to States in developing economic benefit penalty models as a part of their penalty policies. Throughout the year, EPA's Office of Enforcement provides training to State and local programs on how to include the Agency's computerized model (known as BEN) for calculating economic benefit in enforcement actions. Approximately thirty (30) States at present have access to the BEN computer model.

States have expressed concerns with the strict penalty formulas advocated by EPA, because they deal with a broader spectrum of the regulated community. Many of their enforcement actions involve very small companies, individuals or circumstances where economic gain is vague and difficult to assess, (e.g., open burning, etc.) Thus, the States insist that they be allowed to maintain flexibility in utilizing their assessment of penalties involving economic gain.

EPA's Office of Air and Radiation (OAR) is, with the participation of the Office of Enforcement, developing additional guidance which will allow the Agency to evaluate the adequacy of State's penalty assessments (Enforcement Response Guidance). This guidance will assist each State to develop enforcement response plans as a means to measure the individual enforcement actions taken by States and encourage States to develop penalty policies which consider the economic benefit of noncompliance. Such plans will address the full range of responses, including actions such as permit revocations as well as penalty assessments. EPA is also examining the additional enforcement authority provided in Title V of the Clean Air Act Amendments of 1990 as a means of increasing the States' ability to recover penalties that offset the economic benefit of violations. Title V requires that States must have legal authority to assess $10,000 per day for each violation in civil penalties to have a federally approvable operating permits program.

The questions and issues you raised concerning the Agency's need to work with the States to improve their enforcement and penalty practices are set forth below and answered in sequential order.

Q. (1) "To what extent does the EPA in all its regions review SIPS and SIP revisions to ensure that State laws meet the Act's requirements fully and that States' enforcement is effective including the reasonable use of penalties where appropriate?"

A. (1) When SIP revisions are submitted by the States, EPA's Regional Offices are required to review them to ensure their enforceability. In addition, the Office of Air and Radiation performs a review of these analyses to ensure their consistency with national policies and guidance. OAR has issued comprehensive guidance for the States and Regions which discusses in detail the necessary components of an enforceable SIP.

Also, although not a part of the SIP review process, the Regional Offices through their oversight responsibility have reviewed States' enforcement and penalty authorities to advance EPA's position for a credible penalty program. This is done by Regional Offices, in accordance with the T&A Guidance holding monthly conference calls to discuss compliance program implementation, specific cases and pending enforcement actions. Enforcement actions by States not considered to be in accordance with the T&A Guidance are addressed during these monthly program consultations.

Q. (2) "When was the first EPA review of all SIPs made to address these issues?"

A. (2) The first, comprehensive review of SIPs was performed when the SIPs were initially approved by EPA in 1972. Outside the context of formal SIP review, EPA continually reviews the activities of the States to ensure their conformity with national policy. In 1984, EPA and the States developed a national policy guidance for the timely and appropriate resolution of source violations (which was revised in 1986) (see Enclosure No. 1). This policy guidance forms the basis of EPA's oversight procedures to ensure the adequate resolution of State initiated enforcement actions. Since such a significant portion of the air compliance program is implemented at the State level, EPA must rely on the States to resolve most violations. The varying degree of statutory authority that presently exists among State and local enforcement programs does not always result in the recovery of a penalty that is equivalent to the economic benefit of the violation. In its oversight capacity, the Agency continues to work with the States to upgrade their enforcement and penalty authorities. This sometimes involves the Agency assisting States with penalty information needed by State Legislatures in support of increasing their penalty authorities. We believe that the permit program provisions of Title V of the Clean Air Act Amendments of 1990 will provide States with an additional tool by which to upgrade their penalty authority. In the past two years, we completed a comprehensive review of all ozone SIPs and are currently reviewing all SO2 SIPs to ensure among other things their enforceability. The States will be required to submit revisions to the extent deficiencies are noted (within six months for ozone and two years for SO2).

Q. (3) "Has any SIP been disapproved for failure to meet these requirements?"

A. (3) EPA has not disapproved any SIP because of State failure to assess adequate penalties.

Q. (4) Requests that EPA "please provide the requested opinion from your General Counsel [concerning the GAO finding set forth below]."

The GAO states:

The proposed revisions, however, do not address the issue of whether State and local enforcement programs can be required to collect penalties based on the economic benefit violators have obtained. According to senior EPA compliance officials, such legislative direction is needed to change the State and local agencies' practice of not adhering to EPA's civil penalty settlement policy. They pointed out that since the act makes no specific reference to the issue of state and local penalties, these agencies are likely to contest any EPA effort to require that economic benefit penalties be imposed. The EPA officials said that requiring these groups to assess economic benefit penalties appeared to be the most appropriate and practical remedy because (1) State and local programs will continue to carry out most enforcement actions, and (2) EPA's enforcement resources will continue to be limited for the foreseeable future. The EPA officials said that additional legislative authority and/or direction would provide the necessary leverage to compel State and local programs to impose economic benefit penalties.

A. (4) I have requested a legal opinion from the Office of General Counsel (OGC) on this question. When that opinion is available, I will provide you with a copy.

Q. (5) "I do not recall EPA bringing this concern [EPA's interest in having additional leverage to compel State and local programs to increase economic penalties] during consideration of H.R. 3030 or during the conference on S.1630. Is it still a concern after enactment of the 1990 amendments?"

A. (5) Our long term goal is to enable States to get resolution of compliance problems by enhancing their penalty authorities. Title V of the Clean Air Act Amendments of 1990 provides significant new authority pertinent to increasing State penalties. Title V requires all major sources of air pollution to obtain operating permits. Under Title V, to have an approvable permit program States must have authority to assess $10,000 per day for civil penalties for violation of Title V's provisions. However, States are not required to have a permit program, and it is possible that EPA may administer some permit programs. Once the Office of General Counsel provides the legal opinion referred to above, the Office of Enforcement (OE) and OAR will examine what further action EPA should take regarding States' assessing economic benefits in their penalty practices of violations.

Q. (6) "I request that EPA re-examine its policy regarding overfiling particularly in light of the new amendments and consider where it may be appropriate and reasonably used."

A. (6) EPA is concerned that States obtain higher penalties in Clean Air Act enforcement actions. I have asked the Acting Assistant Administrator for Enforcement, Raymond L. Ludwizewski, to convene a workgroup to develop a more vigorous overfiling policy for EPA's air program. This workgroup will include representatives from EPA's Regional Offices, the Stationary Source Compliance Division of the Office of Air and Radiation, and State and local air enforcement agencies. The primary issue the workgroup will be charged with addressing will be, what level of penalties are acceptable in State enforcement actions before EPA should overfile? The workgroup will consider the new requirement in Title V of the Clean Air Act Amendments of 1990, that States have legal authority to assess $10,000 per day for each violation in civil penalties and impose appropriate criminal penalties to have a federally approvable operating permits program. We anticipate that the workgroup will have completed the first draft of the revised overfiling policy within the next six months.

I will keep you apprised of the schedule for producing a recommendation after the workgroup convenes.

Q. (7) "In general, I believe EPA and EPA's General Counsel and the Administrator, in light of the 1990 amendments, need to re-examine its entire enforcement role and policies to ensure that full, fair, consistent, and effective enforcement will be carried out in this decade by EPA and the States.... I request your comments, while noting that the President and EPA never complained to Congress that it lacked resources to enforce the law and carry out the provisions recommended in large part by the President."

A. (7) EPA, is presently examining how to improve the effectiveness of its enforcement program through its "Enforcement in the 1990's Project" and the "Enforcement Four-Year Strategic Plan." One of the areas being reviewed in depth is the State/federal relationship in enforcement. Some of the primary objectives of the 1990's Project's "State/Federal Relationship Workgroup" are to: (1) clarify the appropriate roles and responsibilities of EPA and the States in environmental enforcement, (2) identify barriers and opportunities for State involvement in planning and implementing enforcement strategic plans, (3) consider the need for more effective EPA oversight mechanisms, and (4) examine the implications of strategic planning on existing policies and management systems. The assessment of penalties, in terms of EPA's expectations and oversight is clearly a critical part of this relationship. We plan to complete this review by the end of FY 1991.

II. Improvements to Detect Air Pollution Violations at Major Stationary Sources

EPA recognizes the value of routinely monitoring emissions, keeping records, and requiring periodic reporting from major stationary sources. EPA believes such monitoring is of great benefit both to industry in pollution prevention and energy minimization and to control agencies in continuous compliance and targeting of "problem sources." EPA views continuous emission monitoring in a broader context than that described in the GAO report. While EPA considers continuous emission monitoring systems (CEMS) to be the most useful means of directly determining source compliance with emission regulations, the agency also recognizes the need to rely on the application of

other means of continuous monitoring. These include instrumental monitoring of process parameters such as temperature, pressure, and voltage, and manual monitoring of process information such as the number of gallons and chemical analysis of specific paints used to coat automobiles. These alternative continuous monitoring techniques are appropriate in situations where the technology does not exist for CEMS or the application of technology is not feasible.

EPA, has exercised authorities granted under the Act prior to this year by requiring monitoring (preferentially CEMS) in all NSPS and NESHAPs regulations, and in at least four major categories of SIP-regulated sources. The Agency routinely promoted the use of emission monitoring through guidance and policies, control agency grants, and its management accountability systems.

EPA recognizes the increased emphasis which the Congress placed on enhanced monitoring in the new Clean Air Act Amendments of 1990 and intends to fully explore the additional opportunities and authorities which it received.

Specifically, in promulgating new or revised regulations which pertain to NSPS, NESHAPs, and major source operating permits, EPA will routinely include cost effective continuous monitoring requirements. EPA will preferentially specify the use of continuous emission monitoring systems (CEMS) whenever such instruments are feasible and technologically available. If such instruments are not available, EPA intends to routinely specify the use of process or control system monitoring systems whenever these instruments are technologically available. To the extent neither type of instrumental system is available, EPA intends to specify source use of manual recording of process parameters.

In addition, EPA will require State and local agencies to utilize a similar hierarchical approach in preparing their SIPs to comply with compliance certification and operating permits requirements of the CAAA. To assist the State and local agencies in this effort, EPA will encourage them to utilize, among other things, the data and other information which EPA prepares when it develops NSPS and NESHAPs.

EPA believes GAO understates some of the promotional activities undertaken during the period addressed by the GAO report. These include the following:

- increased Federal promulgation of SIP regulations containing CEMS requirements.

- Headquarters presentations in public and professional conferences, including:

- the American Society of Mechanical Engineers (ASME) meeting (September 1988, in Philadelphia),
- the Air and Waste Management Association (AWMA) CEMS Specialty Conference (November 1989, in Chicago),
- the Engineering Foundation Meetings on Source Measurements (October 1989, in Florida and November 1990, in California).

o Headquarters presentations in Agency workshops and meetings, including:

- six different EPA Air Pollution Training Institute workshops on emission measurement techniques,
- two different workshops on SO_2 SIP processing,

o Establishment of Agency CEMS data follow-up strategies in Regional Offices,

In the following paragraphs EPA provides additional information in response to the five CEMS-related questions raised in your letter.

Q. (8) "Clearly, an increase in CEMS are likely under the revised law. Some of the changes were urged by the President and the EPA, and, as GAO observes, CEMSs are more efficient than inspections, although both are needed. Again, the President and EPA never suggested that EPA lacked resources to implement these requests. I hope that the above comments by 'EPA compliance officials' are not official Administration policy. Please comment."

A. (8) As indicated earlier, EPA intends to implement a continuous monitoring program for all major sources. However, the implementation of this program will have to be done in a manner which ensures that the technology for the given source or source category is feasible and technologically available. It will be phased in over time consistent with the implementation of the CAA amendments. If EPA did not take into consideration these factors, the resources of State and local agencies and industry could very well be a limiting factor.

It should also be noted as previously stated that EPA views the term "continuous monitoring" to include not

only CEMS instruments, but also techniques such as the use of process and control system parameter monitors and manual recordkeeping.

Q. (9) "I presume that the term 'major' sources are those at 100 tons or more and would not include all the 'major' sources now covered by the 1990 amendments. Please comment. I note that Pennsylvania has found that CEMs 'are not appropriate for every major stationary source.'"

A. (9) EPA intends to require the use of continuous monitoring at all "major" sources required to have permits under Title V and those subject to new or revised NSPS and NESHAPS regulations, including those defined by the Clean Air Act Amendments of 1990.

Q. (10) "Please explain the use of CEMs that EPA believes is most efficient and effective. Should they be used to 'detect violations?' Please explain. When are CEMS appropriate for a major stationary source?"

A. (10) CEMS may be used most efficiently and effectively in the following order of priority:

(a) industry self-regulation, pollution prevention, process and energy optimization, and certification of compliance,

(b) detection and documentation of a violation of an emission standard and an operation and maintenance (O&M) requirement,

(d) targeting of sources for possible agency follow-up (e.g., compliance tests, inspections).

Q. (11) "I am interested in this view that CEMs can help a firm reduce its costs, while providing pollution control benefits. If true, EPA should do more to convince the regulated community of these benefits. I request that you address in greater detail the reliability, costs, and benefits issues, as well as the concern that the regulated industry does not want 'full-time' monitors."

A. (11) As noted in the GAO report, CEMS have been shown to provide pollution prevention and energy optimization benefits, as well as compliance certification benefits

to industry. It has been well documented that sources that properly select, install, operate and maintain their CEMS obtain very high levels of reliability (well in excess of 90%) and improved levels of compliance. EPA will continue to vigorously promote CEMS and other forms of continuous monitoring to industry. It will use various techniques to inform and convince industry of the benefits of monitoring including: speaking and presenting technical papers at professional meetings, participating in Agency workgroups, writing and distributing technical reports and manuals to State and industry personnel, and participating in State and industry training activities.

Furthermore, OAR will promote, in cooperation with ORD, the development of new technology which will result in additional CEMS for applications for which there currently are no monitors. As such CEMS become available, EPA will incorporate them into regulatory requirements imposed upon major sources.

As to your question on industry's desire not to have full time monitors, Agency experience suggests that some in industry are very apprehensive about a mechanism or procedure that can document non-compliance and expose their company to potential liabilities that can attach to periods of non-compliance. To many, this is an unknown area that makes them very uncomfortable.

Q. (12) "Finally, GAO observes that EPA 'has not fully followed through' in implementing its 1988 emission-monitoring policy 'calling for CEM installation and use where feasible' because of 'resource limitations and higher priority activities.' That is not an acceptable excuse in light of the President's legislation. EPA and the President promised implementation of the law. Such monitoring is a part of it. Please explain your implementation plans."

A. (12) EPA plans to review and revise as appropriate the 1988 emission monitoring policy taking into consideration the 1990 CAA amendments; EPA will develop a plan which will phase in implementation consistent with the timing for the development of acid rain, operating permit, enhanced monitoring, compliance certification, and the NSPS and NESHAP programs to ensure efficient implementation by EPA, States and industry. The plan will include:

MAR-23-1992 12:01 FROM EPA OAR OAQPS SSCD

(a) developing guidance for how EPA and State agencies should incorporate CEMS, and when to require some other form of continuous monitoring in their regulatory activities,

(b) the development of additional types of CEMS,

(c) incorporating the use of CEMS and other continuous monitors in regulations, guidelines, workshops, etc., and

(d) providing training and technical assistance to agencies and industry related to continuous monitoring.

Q. (13) "[T]he two pictures in the GAO report are apparently EPA pictures. GAO tells us that one was taken in New Jersey in 1990 and the other was taken in Maryland in 1987. There is no discussion in the report about the nature of the pollutants, the controls, or other pertinent information. GAO does not know if there was a violation when they were taken. Also it is unclear why they were taken. Please provide more such details."

A. (13) We are unable to provide you with the requested information at this time. We will seek assistance from GAO in an attempt to identify the sources involved. We will work with the GAO to determine more details regarding these sources.

I trust that this letter is responsive to the questions and issues you have posed. If you have additional questions or concerns, please do not hesitate to contact me, or have your staff contact Michael S. Alushin, the Associate Enforcement Counsel for Air in the Office of Enforcement about questions 5-7. He may be contacted at (202) 382-2820. For information about questions 1-3 and 8-13 please contact John Rasnic, Acting Director, Stationary Source Compliance Division. He may be contacted at (703) 308-8672. For information about question 4, you may contact Alan Eckert, Associate General Counsel for Air and Radiation, on (202) 382-7606.

Sincerely yours,

William K. Reilly

LE-134A:MALUSHIN:382-2820:M3211

2. For the period between April 1, 1991, and May 31, 1991, paragraph (d) of § 117.911 is revised to read as follows:

Note: This is a temporary rule and will not appear in the Code of Federal Regulations.

§ 117.911 Atlantic Intracoastal Waterway, Little River to Savannah River.

* * * * *

(d) SR 171/700 bridge across Wappoo Creek Mile 470.8 at Charleston. The draw shall open on signal, except that the draw need not open from 6 a.m. to 9 a.m. and from 4 p.m. to 6:30 p.m. Monday through Friday, except Federal holidays. From April 1 to November 30, from 9 a.m. to 4 p.m. Monday through Friday, except Federal holidays, the bridge need not open except on the hour and on the half-hour. From April 1 to November 30, from 9 a.m. to 7 p.m., on Saturdays, Sundays and Federal holidays, the bridge need not open except on the hour and half-hour.

* * * * *

Dated: April 9, 1991.

Robert E. Kramek,

Rear Admiral, U.S. Coast Guard, Commander, Seventh Coast Guard District.

[FR Doc. 91-8336 Filed 4-19-91; 8:45 am]

BILLING CODE 4910-14-M

ENVIRONMENTAL PROTECTION AGENCY

40 CFR Part 81

[AD-FRL-3923-6]

Preparation, Adoption, and Submittal of State Implementation Plans; PM-10, Sulfur Dioxide, and Lead Nonattainment and Unclassifiable Area Designations

AGENCY: Environmental Protection Agency (EPA).

ACTION: Information notice.

SUMMARY: Pursuant to sections 107 (d)(3) and (d)(5) of the Clean Air Act as amended by the Clean Air Act Amendments of 1990 (Pub. L. 101-549, Nov. 15, 1990) (the Act), EPA is authorized to promulgate designations of new areas (or portions thereof) as nonattainment, attainment, or unclassifiable for particulate matter less than or equal to 10 microns (PM-10) sulfur dioxide (SO_2), and lead national ambient air quality standards (NAAQS). As required by the Act, EPA has provided notification to all affected States that the lead designations for certain areas should be submitted or that EPA believes that an area's PM-10 or SO_2 designation should be revised. Pursuant to sections 107 (d)(4)(B) and (d)(1)(C) of the Act, certain other areas were designated as nonattainment, by operation of law, for PM-10 and SO_2, respectively. For PM-10, this includes areas previously identified as group I and other areas with violations of the PM-10 NAAQS prior to January 1, 1989. For SO_2, this includes areas which, prior to enactment, were designated as not attaining the primary and secondary SO_2 NAAQS.

The EPA is, by this notice, identifying those PM-10, SO_2, and lead areas for which EPA has provided notification to the affected States that EPA believes the area's designation should be revised to nonattainment or unclassifiable.

ADDRESSES: Information supporting the basis for notifying a State that EPA believes an area's PM-10 or SO_2, designation should be revised to nonattainment or unclassifiable, as well as the basis for requiring States to submit new nonattainment or unclassifiable designations for lead, can be obtained from the respective EPA Regional Office which serves the State where the affected area is located. The contracts and addresses of the Regional Offices are:

Regional offices	States
• Acting Chief, State Air Programs Branch, EPA Region I, JFK Federal Building, Boston, MA 02203-2211, (617) 565-3245; FTS 835-3245.	Connecticut, Maine, Massachusetts, New Hampshire, Rhode Island, and Vermont.
• William S. Baker, Chief, Air Programs Branch, EPA Region II, 26 Federal Plaza, New York, NY 10278, (212) 264-2517; FTS 264-2517.	New Jersey, New York, Puerto Rico, and Virgin Islands.
• Marcia Spink, Chief, Air Programs Branch, EPA Region III, 841 Chestnut Building, Philadelphia, PA 19107, (215) 597-9075; FTS 597-9075.	Delaware, District of Columbia, Maryland, Pennsylvania, Virginia, and West Virginia.
• Bruce P. Miller, Chief, Air Programs Branch, EPA Region IV, 345 Courtland Street, NE., Atlanta, GA 30365, (404) 347-2864; FTS 257-2864.	Alabama, Florida, Georgia, Kentucky, Mississippi, North Carolina, South Carolina, and Tennessee.
• Stephen H. Rothblatt, Chief, Air and Radiation Branch, EPA Region V, 230 South Dearborn Street, Chicago, IL 60604, (312) 353-2211; FTS 353-2211.	Illinois, Indiana, Michigan, Minnesota, Ohio, and Wisconsin.
• Gerald Fontenot, Chief, Air Programs Branch, EPA Region VI, 1445 Ross Avenue, Dallas, TX 75202-2733, (214) 655-7204; FTS 255-7204.	Arkansas, Louisiana, New Mexico, Oklahoma, and Texas.
• Gale Wright, Chief, Air Branch, EPA Region VII, 726 Minnesota Avenue, Kansas City, KS 66101, (913) 236-7020; FTS 276-7020.	Iowa, Kansas, Missouri, and Nebraska.
• Douglas M. Skie, Chief, Air Programs Branch, EPA Region VIII, 999 18th Street, Denver Place—Suite 500, Denver, CO 80202-2405, (303) 293-1750; FTS 330-1750.	Colorado, Montana, North Dakota, South Dakota, Utah, and Wyoming.
David L. Calkins, Chief, Air Programs Branch, EPA Region IX, 75 Hawthorne Street, San Francisco, CA 94105, (415) 744-1219; FTS 484-1219.	Arizona, California, Guam, Hawaii, and Nevada.
• George Abel, Chief, Air Programs Branch, EPA Region X, 1200 Sixth Avenue, Seattle, WA 98101, (206) 442-1275; FTS 399-1275.	Alaska, Idaho, Oregon, and Washington.

FOR FURTHER INFORMATION CONTACT:

Larry D. Wallace (PM-10), Particulate Matter Programs Section, Air Quality Management Division (MD-15), Office of Air Quality Planning and Standards, U.S. Environmental Protection Agency, Research Triangle Park, NC 27711, (919) 541-0906; FTS 629-0906.

Gretchen Hume (SO_2), Sulfur Dioxide Programs Section, Air Quality Management Division (MD-15), Office of Air Quality Planning and Standards, U.S. Environmental Protection Agency, Research Triangle Park, NC 27711, (919) 541-0642; FTS 629-0642.

Laurie Ostrand (Lead), Sulfur Dioxide Programs Section, Air Quality Management Division (MD-15), Office of Air Quality Planning and Standards, U.S. Environmental Protection Agency, Research Triangle Park, NC 27711, (919) 541-3277; FTS 629-3277.

SUPPLEMENTARY INFORMATION:

Background for PM-10

On July 1, 1987, the EPA promulgated revised NAAQS for particulate matter (PM) (52 FR 24634), replacing total suspended particulates (TSP) as the indicator for PM with a new indicator - called PM-10 that includes only those particles with an aerodynamic diameter less than or equal to a nominal 10 microns. At the same time, EPA set forth regulations for implementing the revised particulate matter standards and

EVA - 1 copies

announced EPA's State implementation plan (SIP) development policy elaborating PM-10 control strategies necessary to assure attainment and maintenance of the PM-10 NAAQS (see generally 52 FR 24672). The EPA adopted a PM-10 SIP development policy dividing all areas of the country into three categories based on their probability of violating the new NAAQS: (1) Areas with a strong likelihood of violating the new PM-10 NAAQS and requiring substantial SIP adjustment were placed in group I; (2) areas where attainment of the PM-10 NAAQS was possible and existing SIP's needed less adjustment were placed in group II; and (3) areas with a strong likelihood of attaining the PM-10 NAAQS and, therefore, needing adjustments only to their preconstruction review program and monitoring network were placed in group III (52 FR 24672, 24679-24682).

Pursuant to section 107(d)(4)(B) of the Act, areas previously identified as group I and other areas which had monitored violations of the PM-10 NAAQS prior to January 1, 1989 were, by operation of law, designated nonattainment for PM-10. Descriptions of the areas identified as group I and II areas were clarified in a Federal Register notice on October 31, 1990 (55 FR 45799). That notice also identified group II areas which violated the standards as of January 1, 1989. The EPA has announced all of the areas that were designated nonattainment by operation of law for PM-10 upon enactment of the Act in a Federal Register notice dated March 15, 1991 (56 FR 11101).

In addition, EPA is authorized to promulgate the designation of new areas as nonattainment for PM-10 pursuant to section 107(d)(3) of the Act on the basis of air quality data, planning and control considerations, or any other air quality-related consideration that the Administrator deems appropriate. Based upon available information, EPA has notified the governors of those States with areas which recorded violations of the PM-10 NAAQS on or after January 1, 1989 and indicated that EPA believes these areas should be redesignated as nonattainment. After notification, the governor of each affected State must submit to EPA the designation which he or she considers appropriate for each area in question within 120 days. For administrative efficiency reasons, EPA requested the States to submit the designations by March 15, 1991 (the date the lists of designations for all ozone and carbon monoxide areas are due from the governor of each State pursuant to section 107(d)(4)(A) of the Act). No later than 120 days after the State's response, if any, EPA must promulgate those redesignations which EPA deems necessary and appropriate.

The EPA is by today's notice announcing that EPA believes available air quality information indicates that 16 areas should be redesignated as nonattainment for PM-10, and that EPA has so notified the governors of the affected States. A list of the 16 areas is provided below in table I. As discussed above, after consideration of the State's submittals, if any, EPA will promulgate the designations which EPA deems appropriate and necessary. Pursuant to section 189(a)(2)(B) of the Act, States must submit PM-10 SIP's for these areas to EPA within 18 months after EPA promulgates the nonattainment designation.

Background for SO_2

Following the Clean Air Act Amendments of 1977, EPA published areas identified by the States as nonattaninment, attainment, or unclassifiable. Any area designated as not attaining the primary or secondary SO_2 NAAQS as of the date of enactment of the 1990 Amendments was designated nonattainment for SO_2 by operation of law upon enactment, pursuant to section 107(d)(1)(C)(i) of the Act. The EPA will formally codify these designations in 40 CFR part 81 when EPA codifies the designations for other pollutants.

In addition, as described above, EPA is authorized to promulgate the designation of new areas (or portions thereof) as nonattainment for SO_2, pursuant to section 107(d)(3) of the Act, on the basis of air quality data, planning and control considerations, or any other air quality-related consideration the Administrator deems appropriate. Based upon available information, EPA has notified the governors of the affected States that EPA believes certain areas should be designated as nonattainment for SO_2. After notification, the governor of each affected State must submit to EPA the designation he or she considers appropriate for each area in question within 120 days. For the reasons described above, the EPA requested the States to submit the designations by March 15, 1991. No later than 120 days after the State's response, if any, EPA must promulgate those redesignations EPA deems necessary and appropriate.

As mentioned above, for administrative efficiency reasons, those SO_2 areas designated nonattainment by operation of law upon enactment of the Act will be formally codified in 40 CFR part 81 when EPA codifies the designations for other pollutants. The EPA is by today's notice announcing that EPA has notified the governors of affected States that EPA believes 13 areas, listed in table II of this notice, should be designated nonattainment for SO_2.

Pursuant to section 191(b) of the Act, States must submit SIP's by May 15, 1992 for those SO_2 areas which are designated nonattaiment by operation of law for the primary SO_2 NAAQS and which lack a fully-approved SIP. For those SO_2 areas designated nonattainment after enactment, States must submit SIP's to EPA within 18 months after promulgation of the nonattainment designation, pursuant to section 191(a) of the Act.

Background for Lead

In 1978, when EPA promulgated the lead NAAQS, it was not authorized to designate areas nonattainment, attainment, or unclassifiable. Under section 107(d)(5) of the Act, EPA is now authorized to require States to designate areas (or portions thereof) as nonattainment, attainment, or unclassifiable for lead. Sections 107 (d)(1) and (d)(5) of the Act permit EPA to require States to submit lead designations in a timeframe that EPA deems reasonable, but no sooner than 120 days after date of notification nor later than 1 year after the date of notification. For the reasons described above, the EPA requested the States to submit the designations by March 15, 1991. The EPA must then promulgate these designations no later than 1 year after notifying the State of the requirement to submit designations of certain areas, but first notifying the affected State of any modifications EPA deems necessary and appropriate to the State's submittal.

By today's notice, EPA is announcing that it has notified the governors of affected States that they should proceed to designate as nonattainment those areas that have recorded violations of the lead NAAQS. In addition, EPA has requested the governors to designate as unclassifiable those areas that contain stationary lead sources which EPA believes to be capable of violating the lead NAAQS, but for which existing air quality data are insufficient to designate as attainment or nonattainment. A list of those areas EPA believes should be designated to nonattainment and unclassifiable for lead is provided in table III below.

Any State containing an area that is ultimately designated as nonattainment for lead must submit a SIP to EPA within 18 months of the promulgation of the nonattainment designation, pursuant to section 191(a) of the Act.

Today's Action

The EPA is, by this notice, identifying for the public those PM-10, SO_2, and lead areas for which EPA has notified the affected States that EPA believes the area should be designated or the designation should be revised to nonattainment or unclassifiable. Upon receipt of responses by the governors of the affected States, EPA will review the submitted information and conduct appropriate rulemaking, at which time the public will have additional opportunity for review and comment.[1]

List of Subjects in 40 CFR Part 81

Air pollution control, Lead, Participate matter, Sulfur dioxide.

Authority: Sections 107(d), 110 and 301(a) of the Clean Air Act as amended.

Dated: April 15, 1991.

Michael Shapiro,

Acting Assistant Administrator for Air and Radiation.

Table I—*PM-10 Designations*

[Areas for which EPA has recently notified the affected State that EPA believes the area should be redesignated as nonattainment for PM-10 *]

Arizona	Payson.
	Bullhead City.
California	Sacramento County.
	San Bernardino County.
Colorado	Steamboat Springs.
Idaho	Kootenai County.
Illinois	Edgar County, Hunter and Stratton twps.
	La Salle County, Twp. 33N/ Range 2E/Section 30.
Michigan	Bay County.
Missouri	St. Louis County.
Montana	Thompson Falls.
New Mexico	Bernalillo County.
New York	New York County.
Oregon	Oakridge.
Washington	Benton County.
West Virginia	City of Wierton.

* Based on PM-10 NAAQS violations measured on or after January 1, 1989.

Table II

[Areas for which EPA has recently notified the affected States that EPA believes the area should be redesignated as nonattainment for SO_2]

State and counties	Primary standard exceeded	Secondary standard exceeded
Iowa:		
Clinton Co.	X	X
Illinois:		
Madison Co.	X	X
St. Clair Co.	X	X
Michigan:		
Wayne Co.	X	X
Ohio:		
Butler Co.	X	X
Hamilton Co.	X	X
Oklahoma:		
Kay Co.	X	
Pennsylvania:		
Allegheny Co.	X	
Warren Co.	X	
Texas:		
Harris Co.		
Jefferson Co.		X
Wisconsin:		
Douglas Co.	X	
District of Columbia	X	X

Table III.—Lead Designations

[Areas EPA believes should be designated nonattainment and unclassifiable for lead]

State and counties	Primary & secondary standards exceeded	Cannot be classified
Alabama:		
Pike Co.	x	
Jefferson Co.	x	
California:		
Los Angeles Co.		x
Florida:		
Hillsborough Co.		x
Georgia:		
Muscogee Co.		x
Indiana:		
Marion Co.	x	
Louisiana:		
East Baton Rouge Parish		x
Missouri:		
Jefferson Co.	x	
Holt Co.		x
Iron Co.	x	
Dent Co.		x
Minnesota:		
Dakota Co.	x	
Montana:		
Lewis & Clark Co.	x	
Nebraska:		
Douglas Co.	x	
New York:		
Orange Co.	x	
Onondaga Co.		x
Ohio:		
Cuyahoga Co.		x
Pennsylvania:		
Berks Co.	x	
Tennessee:		
Shelby Co.	x	
Fayette Co.		x
Williamson Co.	x	
Texas:		
Collin Co.	x	
Bexar Co.		x

[FR Doc. 91-9369 Filed 4-19-91; 8:45 am]

BILLING CODE 6560-50-M

[1] Pursuant to section 107(d)(2)(B) of the Act, the promulgation of the lead designations is not subject to the Administrative Procedures Act requirements for notice-and-comment rulemaking [5 U.S.C. 553-557]. However, as a matter of public policy, EPA may choose to provide such notice and comment or other opportunity for public review.

40 CFR Part 281

[FRL-3923-7]

New Hampshire; Approval of State Underground Storage Tank Program

AGENCY: Environmental Protection Agency.

ACTION: Notice of Tentative Determination on Application of New Hampshire for Final Approval, Public Hearing, and Public Comment Period.

SUMMARY: The purpose of this notice is to announce that: (1) The Environmental Protection Agency (EPA) has received a complete application from the State of New Hampshire requesting final approval of its underground storage tank (UST) program under subtitle I of the Resource Conservation and Recovery Act (RCRA); (2) EPA has reviewed New Hampshire's application and has made the tentative decision that New Hampshire's UST program satisfies all of the requirements necessary to qualify for final approval; (3) New Hampshire's application for final approval is now available for public review and copying; (4) public comments are requested; and (5) a public hearing will be held to solicit comments on the application, if requested.

DATES: A public hearing is scheduled for May 23, 1991. The State of New Hampshire will participate in the public hearing held by EPA. The hearing will begin at 10 a.m. and will continue until the end of testimony or 1 p.m., whichever comes first. Requests to present oral testimony must be filed by May 17, 1991. Written consent must be received by May 23, 1991. EPA reserves the right to cancel the hearing should there be no significant public interest. Those informing EPA of their intention to testify will be notified of the cancellation.

ADDRESSES: Comments and requests to testify should be mailed to Susan Hanamoto, Underground Storage Tank Program, HPU-1, U.S. EPA, Region I, JFK Federal Building, Boston, MA 02203. Copies of New Hampshire's final application for program approval are available 8 a.m.-4 p.m., Monday through Friday, at the following locations for review.

New Hampshire Department of Environmental Services, 6 Hazen Drive, Concord, NH 03302, Phone: (603) 271-3644;

U.S. EPA Headquarters, Library, room 211A, 401 M Street, Washington, DC 20460, Phone: (202) 382-5926;

8-8-91
Vol. 56 No. 153

200

Federal Register

Thursday
August 8, 1991

EPA - OAQPS Library
MD-16
RTP, NC 27711

United States
Government
Printing Office
SUPERINTENDENT
OF DOCUMENTS
Washington, DC 20402

OFFICIAL BUSINESS
Penalty for private use, $300

**********5-DIGIT 27711

A FR ENVIR016E EPA F
ENVIR PROTECTION AGENCY
OAQPS LIBRARY RM 826
MD 16
RSCH TRI PK NC 27711

SECOND CLASS NEWSPAPER

Postage and Fees Paid
U.S. Government Printing Office
(ISSN 0097-6326)

assurance/audit surveillance plan; (4) an enforcement plan discussing legal authority and penalties; and (5) train all inspectors prior to program startup. All five items have been satisfactorily addressed by the State and are discussed in the following paragraphs.

The vehicle will fail inspection if any emission control component is missing, disconnected or shows evidence that tampering has occurred or, if the lead detection test reveals lead in the tailpipe of a vehicle requiring unleaded fuel. Vehicles that fail the catalyst, fuel inlet restrictor, or lead detection test must replace the catalyst before being reinspected. Vehicles that fail any item of the inspection will have to be repaired by a mechanic of the owner's choice and returned for reinspection within thirty (30) days. If the vehicle passes reinspection, then a certificate of inspection will be issued.

The DPS rules and regulations require "proper replacement" of tampered or missing items. The State has submitted a written interpretation by the DPS dated July 26, 1987, of the term "proper replacement" in § 856.1(C) of the Oklahoma statutes to mean "original equipment manufacturer (OEM) or equivalent." The catalytic converter may be replaced by an OEM aftermarket catalytic converter, or one that has demonstrated compliance with EPA policy.

The annual anti-tampering inspection requirement will be enforced through a windshield sticker system. Vehicles subject to the anti-tampering inspection will display a larger and different colored windshield sticker than vehicles subject only to the safety inspection. The sticker will also have the word "EMISSION"' across the front.

Although the program will be enforced by State, County and City Police Departments, primary enforcement will rest with the Oklahoma City Police Department. Oklahoma City has adopted the State's regulation and citations can be issued with a maximum penalty of $500 to owners operating non-complying vehicles. The Oklahoma City Police Department has committed to aggressively enforce the anti-tampering program. When a citation is issued, the owner has fifteen (15) days to secure a proper inspection.

The rules and regulations manual requires vehicles owned and operated in the program area to be inspected in that area. All inspection stations, statewide, are required to verify the residence of the vehicle owner prior to conducting an inspection. This will be accomplished by checking the owner's driver's license and the certificate of insurance. The insurance certificate was determined to be the best method of verifying residence since State law requires the certificate to be carried at all times and it must be renewed every six months. If a vehicle subject to the program is presented for inspection outside the program area, the inspection station will not inspect the vehicle and will inform the owner that the vehicle must be inspected in the program area.

A vehicle which has failed an inspection will be easily identified by law enforcement officers since the sticker will be marked with a large "X". Inspection stations are required to remove stickers which have expired when the vehicle is presented for inspection. If the sticker has not expired and the vehicle failed the inspections, it will be marked with an "X". All motorists have the right to appeal to the DPS any rejection certificate issued within seven days. When an inspection decision is appealed, the DPS will reinspect the vehicle within 30 days.

The DPS has trained all inspectors in the I/M program area. The training consists of inspecting the emission control systems and detecting tampering and misfueling. To be certified, an inspector must complete the prescribed training and pass a written test. Inspectors may not transfer from one station to another without being recertified and they are subject to reexamination at any time.

Each inspection station will be visited by a DPS trooper at least once every two months. The trooper will audit the records to ensure that the stickers are accountable and he will observe inspections to ensure compliance with the proper procedures. If deviations are noted, the station and/or inspector is subject to suspension or revocation of license or recertification by the DPS. Any station operator or inspector who is convicted of a violation is subject to a fine of up to $500 and/or imprisonment for not more than 30 days. As committed in a February 7, 1991, letter, the DPS will annually conduct unannounced visits to 10 percent of the Oklahoma inspection stations in unmarked cars driven by troopers in civilian clothes to insure that inspections are being properly conducted. The February 7, 1991, letter states that a minimum of six inspections will be accomplished each calendar quarter. The DPS will also investigate all complaints received from the public with regard to inspection stations or inspectors.

The I/M plan contains recordkeeping or record submittal commitments. The State has committed, in an October 12, 1990, letter to report semiannually to EPA, information relating to the effectiveness and enforcement of the I/M program. Items to be reported include: (1) The approximate number of vehicles to be inspected based on vehicle type, age, fuel type, (2) the number of vehicles receiving and passing initial inspections, (3) the number of vehicles failing the initial inspection, (4) the number passing after repair, (5) the number failing for each emission control device, and (6) the number of inspection stickers issued. The state also committed to report data concerning inspection facilities. Data that will be reported include: (1) The number of facilities licensed to perform inspections, and (2) the number of facility licensees and inspector certificates suspended and revoked.

A public information plan was submitted to EPA on November 7, 1986. That plan described the program that was implemented by the OSDH. Periodic news releases began in October 1986 and increased near the program start date of January 1987 and continued into that year. A brochure, which explains the program, was distributed in June 1986 by the DPS and the OSDH. Other activities during the month of October 1986 were free tampering inspections and the distribution of pamphlets which discussed the tampering inspection program and the health effects of automobile emissions.

L Reasonable Further Progress (RFP)

The Reasonable Further Progress (RFP) curve submitted with the Oklahoma carbon monoxide SIP predicted sufficient reductions would be achieved to attain the carbon monoxide NAAQS. The curve showed that a decrease of 103,535 tons of CO, or 38.1 percent, would occur in Oklahoma County between 1984 and 1988. The OSDH demonstrated that a 32 percent decrease of CO emissions was required to attain the carbon monoxide standard. The RFP report projected an attainment date of April 1988. Since December 31, 1987, no violations of the carbon monoxide NAAQS have occurred in Oklahoma County.

The RFP curve demonstrated that predicted reductions would be achieved with the implementation of the I/M anti-tampering program and the continuation of the Federal Motor Vehicle Control Program.

The State has also committed to report annually on how the I/M program contributes to reasonable further progress. These reports have been submitted by the State for years 1988 through 1988 and indicate that RFP was being met during those years.

Nothing in this action should be construed as permitting or allowing or establishing a precedent for any future

request revision to any SIP. Each request for revision to the SIP shall be considered separately in light of specific technical, economic, and environmental [illegible]s and in relation to relevant [illegible]tory and regulatory requirements.

J. Final Action

Today, EPA is approving the SIP revision submittals of October 17, 1985, January 29, 1986, November 7, 1986, October 12, 1990, and October 15, 1990, which include: (1) The I/M plan with an anti-tampering regulation; and (2) the carbon monoxide plan control strategy and attainment demonstration.

Regulatory Process

Under 5 U.S.C. 605(b), I certify that this SIP revision will not have a significant economic impact on a substantial number of small entities. (See 46 FR 8709)

Under section 307(b)(1) of the Act, petitions for judicial review of this action must be filed in the United States Court of Appeals for the appropriate circuit by October 7, 1991. This action may not be challenged later in proceedings to enforce its requirements (See section 307(b)(2)).

The Office of Management and Budget has exempted this rule from the requirements of section 3 of Executive Order 12291.

[illegible] Agency has reviewed this request [illegible]vision of the federally approved SIP for conformance with the provisions of the 1990 Amendments enacted on November 15, 1990. The Agency has determined that this action conforms with those requirements irrespective of the fact that the adoption of the revision by the State preceded the date of enactment.

List of Subjects in 40 CFR Part 52

Air pollution control, Carbon monoxide, Hydrocarbons, Incorporation by reference, Intergovernmental relations, Reporting and recordkeeping requirements.

Authority: 42 U.S.C. 7401–7642.

Note: Incorporation by reference of the State Implementation Plan for the State of Oklahoma was approved by the Director of the Federal Register on July 1, 1982.

Dated: June 28, 1991.

William K. Reilly,

Administrator.

40 CFR part 52, Subpart LL, is amended as follows:

Subpart LL—Oklahoma

1. The Authority citation for part 52 [illegible]ues to read as follows:

[illegible]ority: 42 U.S.C. 7401–7642.

2. Section 52.1920 is amended by adding paragraph (c)(40) to read as follows:

§ 52.1920 Identification of plan.

* * * * *

(c) * * *

(40) On October 17, 1985, the Governor of Oklahoma submitted a SIP revision designed to achieve the carbon monoxide standard in Oklahoma County. Supplemental information was submitted on January 29, 1986, November 7, 1986, October 12, 1990, and October 15, 1990. The anti-tampering regulation was submitted to EPA by the Governor on October 8, 1985.

(i) Incorporation by reference.

(A) Oklahoma Official Motor Vehicle Inspection Rules and Regulations Manual adopted December 5, 1985, and effective January 1, 1986.

(B) 47 O.S. SUPP. Section 858.1 et seq. adopted May 24, 1984, and effective May 24, 1984.

(C) OP. Oklahoma Attorney General number 84–174 (December 12, 1984).

(D) October 17, 1985, plan reporting commitments for Oklahoma County Reasonable Further Progress schedule, page 6.

(E) The City of Oklahoma City Ordinance No. 12,575, as passed by the Council of the City of Oklahoma City on March 31, 1970, and approved by the Mayor on March 31, 1970.

(ii) Additional material.

(A) A February 7, 1991, commitment letter stating that the DPS will annually conduct unannounced visits at 10 percent of the Oklahoma County inspection stations.

(B) An October 12, 1990, letter committing to report semiannually to EPA, information relating to the effectiveness and enforcement of the I/M program.

[FR Doc. 91–18823 Filed 8–7–91; 8:45 am]

BILLING CODE [illegible]

---

40 CFR Part 81

[AD–FRL–3982–5]

Designations and Classifications for Initial PM–10 Nonattainment Areas

AGENCY: Environmental Protection Agency (EPA).

ACTION: Notice correcting EPA's announcement of the designations and classifications for the initial PM–10 (particulate matter nominally 10 microns or smaller in diameter) nonattainment areas.

SUMMARY: On March 15, 1991 (56 FR 11101), EPA announced the designations and classifications of areas with respect to the national ambient air quality standards (NAAQS) for PM–10 occurring by operation of law upon enactment of the 1990 Amendments to the Clean Air Act (Act) (the "initial PM–10 nonattainment areas").

Sections 107(d)(2) (referencing section 107(d)(4) designations) and 188(a) of the Act specify that EPA must make these announcements. In the March 1991 notice, EPA explained the operative legal provisions governing the designation and classification of these initial areas (see e.g., sections 107(d)(4)(B) (i), (ii), (iii), and 188(a) of the Act).

The EPA also provided an opportunity for the public to comment on EPA's announcement. As noted, this did not stem from any legal obligation. Rather, as a matter of policy, EPA requested public comment on the announcement in order to facilitate public participation and avoid committing errors. In today's action, EPA has responded to pertinent comments addressing the March 1991 Federal Register notice. Where EPA believed appropriate and where there was a legal basis to do so, EPA has made adjustments to the initial PM–10 nonattainment areas in light of the comments. Finally, note that for informational purposes, EPA has restated some of the background discussion provided in the March 1991 notice.

EFFECTIVE DATES: For those areas that have remained unchanged, the effective date of the announcement of the designation and classification of the areas is May 14, 1991, as indicated in the March 15, 1991 Federal Register notice (56 FR 11101).

For those areas where EPA has adjusted or corrected the boundaries, the effective date of the announcement of the designation and classification of such areas is August 8, 1991. (see discussion below).

FOR FURTHER INFORMATION CONTACT: Larry D. Wallace, Particulate Matter Programs Section, Air Quality Management Division (MD–15), Office of Air Quality Planning and Standards, U.S. Environmental Protection Agency, Research Triangle Park, NC 27711. Mr. Wallace's phone number is (919) 541–0906 or FTS 629–0906.

SUPPLEMENTARY INFORMATION: The air quality monitoring data supporting the nonattainment designation of the former Group II and III areas monitoring violations of the PM–10 NAAQS prior to January 1, 1989 are available from the respective EPA Regional Office which serves the State where the affected area

is located. The addresses of the Regional Offices are as follows:

- State Air Programs Branch, EPA Region I, J.F.K. Federal Building, Boston, MA 02203–2211.
- Air Programs Branch, EPA Region II, 26 Federal Plaza, New York, NY 10278.
- Air Programs Branch, EPA Region III, 841 Chestnut Building, Philadelphia, PA 19107.
- Air Programs Branch, EPA Region IV, 345 Courtland Street, NE., Atlanta, GA 30365.
- Air and Radiation Branch, EPA Region V, 230 South Dearborn Street, Chicago, IL 60604.
- Air Programs Branch, EPA Region VI, 1445 Ross Avenue, Dallas, TX 75202–2733.
- Air Branch, EPA Region VII, 726 Minnesota Avenue, Kansas City, KS 66101.
- Air Programs Branch, EPA Region VIII, 999 18th Street, Denver Place—suite 500, Denver, CO 80202–2405.
- Air Programs Branch, EPA Region IX, 75 Hawthorne Street, San Francisco, CA 94105.
- Air Programs Branch, EPA Region X, 1200 Sixth Avenue, Seattle, WA 98101.

I. Background

A. 1987 Revision of the NAAQS for Particulate Matter

On July 1, 1987 EPA revised the NAAQS for particulate matter, replacing total suspended particulates (TSP) as the indicator for particulate matter with a new indicator that included only those particles with an aerodynamic diameter less than or equal to a nominal 10 micrometers (called "PM–10") (see 52 FR 24634). At the same time EPA set forth regulations for implementing the revised particulate matter standards and announced EPA's State implementation plan (SIP) development policy elaborating PM–10 control strategies necessary to assure attainment and maintenance of the PM–10 NAAQS (see generally 52 FR 24672). The EPA adopted a PM–10 SIP development policy dividing all areas of the country into three categories based on their probability of violating the new NAAQS:

1. Areas with a strong likelihood of violating the PM–10 NAAQS and requiring substantial SIP adjustment were placed in Group I.

2. Areas where attainment of the PM–10 NAAQS was possible and existing SIP's needed less adjustment were placed in Group II.

3. Areas with a strong likelihood of attaining PM–10 NAAQS and therefore needing adjustment only to their preconstruction review program and monitoring network were placed in Group III (see 52 FR 24672, 24679–24682).

B. Prior Listing of the Modification to PM–10 Group I, II, and III Areas

In accordance with the standards, policies, and regulations published on July 1, 1987 for revising and implementing the new particulate matter standard, EPA identified and listed the Group I and Group II areas in each State in a notice published on August 7, 1987 (see 52 FR 29383). The 1987 notice also indicated that any area of the country not listed as Group I or II was placed in Group III (see 52 FR 29383).

The EPA subsequently modified the identification for three areas and announced these revisions in a notice published on March 28, 1989 (see 54 FR 12620). Specifically, the 1989 notice indicated that Porter County, Indiana, was changed from Group I to Group II; Mono Basin, California, was changed from Group III to Group II; and Sandpoint, Idaho, was changed from Group I to Group II.

On October 31, 1990 EPA published technical corrections modifying the identification of the locations of concern for some of the areas previously identified as Group I and II areas (see 55 FR 45799). When EPA listed the initial groupings for areas in the August 1987 notice, the Group I and II areas of concern were generally described as cities, towns, counties, or planning areas. The EPA indicated at that time that these descriptions were only the initial definitions of the areas to be investigated in the SIP development process and would be better defined later. The modifications to the identification of the Group I and II areas announced in the October 1990 notice specifically defined and delineated the boundaries of the Group I and Group II areas in question based on information obtained in the SIP development process and EPA guidelines and procedures for determining particulate matter boundaries. Generally, prior to modifying the identification of boundaries in the October 1990 notice, EPA consulted with the affected States, reviewed technical information, and was guided by applicable EPA policy. Weighing these various factors, EPA set the boundaries it believed appropriate.

II. Today's Action

On March 15, 1991 (56 FR 11101), EPA announced the designations and classifications occurring for PM–10 by operation of law upon enactment of the Act (the "initial PM–10 nonattainment areas").[1] Sections 107(d)(2)(A) (referencing section 107(d)(4) designations) and 188(a) of the Act specify that EPA must make these announcements. In the March 1991 notice, EPA explained the operative legal provisions governing the designation and classification of these initial areas (see, e.g., sections 107(d)(4)(B)(i), (ii), (iii), and 188(a) of the Act). The EPA also provided an opportunity for the public to comment on EPA's announcement. As noted, this did not stem from any legal obligation.[2] Rather, as a matter of policy, EPA requested public comment on the announcement in order to facilitate public participation and avoid committing errors. In today's action, EPA has responded to pertinent comments addressing the March 15, 1991 notice.[3] The EPA has made adjustments

[1] In that notice EPA deferred codification of the PM–10 designations and classifications until EPA codifies the designations and classifications of areas across the country with respect to the NAAQS for other pollutants. This codification should occur sometime within the next few months. As discussed below, codification of the designation of the initial PM–10 nonattainment areas will represent the Agency's final action on those designations within the meaning of section 307(b) of the Act, 42 U.S.C. 7607(b).

[2] In the March 15, 1991 notice EPA noted (and has reiterated in today's notice) that neither the announcement of the initial designations nor the initial classifications for PM–10 were subject to the requirements for notice-and-comment rulemaking under either the Administrative Procedure Act (APA) (5 U.S.C. 553–557) or section 307(d) of the Act (see generally 56 FR 11103). Regarding designations, section 107(d)(2) of the Act requires the Administrator to publish a notice announcing designations occurring pursuant to section 107(d)(4), but explicitly provides that such announcement is not subject to APA notice-and-comment rulemaking procedures. Thus, Congress has expressly exempted from the notice-and-comment procedural requirements of the APA the announcement of those areas designated nonattainment for PM–10 by operation of law under section 107(d)(4)(B). Regarding classifications, section 188(a) of the Act requires the Administrator to publish a notice announcing the classifications of these areas. Section 188(a) explicitly states that the provisions of section 172(a)(1)(B) pertaining to lack of notice and comment and judicial review shall apply when the Administrator announces these classifications. Section 172(a)(1)(B), in turn, expressly exempts the classification announcement from the notice-and-comment procedures set forth in 5 U.S.C. 553–557.

[3] The EPA received many pertinent comments in direct response to the notice. However, EPA has attempted also to respond to pertinent comments received from affected States submitted in response to another Agency action. In January and February of 1991, EPA Regional Administrators provided letters to the Nation's Governors explaining some of the specific State actions that were to be completed in order to initiate implementation of title I of the Act as recently amended by the 1990 Amendments ("RA Letters"). Regarding PM–10, for example, EPA informed the Governors of those areas designated nonattainment for PM–10 by operation of law upon enactment of the Act and explained some of the SIP requirements applicable to such areas under the

Continued

to the initial PM-10 nonattainment areas in light of the comments, where EPA [illegible]ved appropriate and where there [illegible] legal basis to do so.

A. Legal Framework

Section 107(d)(4)(B)(i) of the Act clearly specifies those former Group I areas that were designated nonattainment at enactment. That provision states that each former Group I area identified in 52 FR 29383 (August 7, 1987) or modified before enactment of the Act (November 15, 1990) is designated nonattainment for PM-10. As discussed previously, the Federal Register notice published on October 31, 1990 (55 FR 45799) clarified or "modified" EPA's identification of the Group I areas listed in the August 1987 notice.[4] Thus, as explicitly provided by the statute, the Group I areas listed in the October 1990 notice became nonattainment for PM-10 by operation of law upon enactment of the Act on November 15, 1990. The EPA, then, announced that these areas were among the initial PM-10 nonattainment areas in its March 15, 1991 Federal Register notice. Because the Act explicitly provided that the former Group I areas identified in the October 1990 notice became nonattainment for PM-10 by [illegible]ration of law at enactment, EPA [illegible]ves the law generally prohibits any [illegible]dification of these areas at this juncture. The one exception is where, before enactment, EPA committed error in identifying and/or modifying a Group I area as referenced in section 107(d)(4)(B)(i) of the Act.

There are a few circumstances where there is evidence that EPA intended that the boundary for a Group I area identified and/or modified in its October 31, 1990 Federal Register notice (and reiterated in the March 1991 announcement of initial PM-10 nonattainment areas) be different and through administrative oversight or other error failed to so provide.[5] In one instance, for example, EPA mislabeled a highway number. EPA has made adjustments to the boundaries in such circumstances. Faced with the choice of designating erroneous nonattainment areas or interpreting section 107(d)(4)(B)(i) such that it includes the areas identified before enactment in the October 31, 1990 notice but corrected for error, EPA believes the latter approach the most reasonable.[6] Moreover, EPA believes that in providing that the areas identified and/or modified in the October 31, 1990 notice would be nonattainment areas by operation of law upon enactment of the 1990 Amendments, Congress and the President could not have intended to ratify dysfunctional or evidently erroneous boundaries not grounded in fact. Note that these circumstances are in contrast to the situation where commenters requested modification of a former Group I area because they believe, as a technical or policy matter, that all or part of the area should not be designated nonattainment. EPA has not adjusted former Group I areas where there is a judgment dispute about the proper scope of the area or its very designation as nonattainment.[7]

The prior categorization as a Group II or III area bears differently on an area's nonattainment status, in comparison with the Acts' treatment of former Group I areas. Specifically, section 107(d)(4)(B)(ii) of the Act states that "any area containing a site for which air quality monitoring data show a violation of the national ambient air quality standards for PM-10 before January 1, 1989 (as determined under part 50, appendix K, of title 40 of the Code of Federal Regulations) is hereby designated nonattainment for PM-10."[8] The language of section 107(d)(4)(B)(ii) suggests that EPA has more discretion in determining which of the former Group II and III areas were designated nonattainment by operation of law upon enactment of the Act. For example, EPA must exercise some judgment in construing what is a violation within the meaning of 40 CFR part 50, appendix K, to the extent these regulations leave discretion.

Further, section 107(d)(4)(B)(ii) does not define the boundaries of "any area" measuring a pre-1989 violation. The Act does, however, set forth a revised definition of nonattainment area for purposes of section 107(d) designations generally. Specifically, section 107(d)(1)(A)(i) of the Act defines a nonattainment area as "any area that does not meet (or that contributes to ambient air quality in a nearby area that does not meet) the national primary or secondary ambient air quality standard for the pollutant." Thus, coincident with providing that certain former Group II and III areas were designated nonattainment by operation of law at enactment, the Act provided a standard to govern the scope of what that area should be. This definition suggests that EPA must apply its expertise and knowledge to isolate as nonattainment any area it believes violates the standard or any area that significantly contributes to such violation in a nearby area.[9] Further, nonattainment area definition is being applied to these areas for the first time since under EPA's pre-enactment grouping scheme they were not designated nonattainment. The EPA therefore believes that, consistent with this new standard, it has some discretion to apply its technical expertise and appropriately adjust the boundaries of the former Group II or III areas for purposes of determining which

---

revised law. By these letters EPA also initiated the process of redesignating additional areas as nonattainment for PM-10, pursuant to section 107(d)(3) of the Act. Section 107(d)(3) expressly provides an opportunity for State participation in redesignating additional PM-10 nonattainment areas. Section 107(d)(4)(B), the provision addressing designation of the initial PM-10 nonattainment areas (i.e., those occurring by operation of law upon enactment), does not contemplate such a process. Nevertheless, some Governors and State agency officials submitted comments on the initial areas in responding to EPA's suggested additional nonattainment areas. The EPA has responded to any such pertinent comments in this notice.

[illegible]re-enactment modifications to the August 1987 [illegible]e were also made in the Federal Register notice [illegible]ished on March 28, 1988, discussed previously.

[4] This error was brought to EPA's attention in comments submitted in response to EPA's March 15, 1991 announcement or in EPA's review of its records in preparing responses to comments.

[5] Further, section 110(k)(6) expressly authorizes the Administrator to revise designations, classifications, etc. where the Administrator determines that such designations, classifications, etc. were in error.

[6] In cases where there are disputes regarding the proper scope of the designation, if a State later makes a persuasive demonstration (SIP equivalent) that EPA's factual conclusions in identifying a former Group I area were in error, the Agency will consider whether it would be appropriate to correct the error relying on the authority in section 110(k)(6) of the Act.

[7] Since EPA grouped all areas of the country as I, II, or III when it revised the PM-10 NAAQS (see previous discussion) and because all former Group I areas were designated nonattainment by operation of law under section 107(d)(4)(B)(i), the reference to "any area" in section 107(d)(4)(B)(ii) de facto applies to all areas formerly grouped as II and III.

That all former Group I areas would be designated nonattainment by operation of law upon enactment of the Act, while former Group II/III areas would have to measure a violation prior to January 1, 1989 to be so designated, is grounded in some logic and reason. As noted above, when EPA placed areas of the country into Groups I, II, or III, Group I areas were those with a strong likelihood of violating the PM-10 standard.

[8] In the context where the Agency has adjusted the boundaries of a former Group II or III area because it contributes to a violation in a nearby area, the Agency has construed the definition of nonattainment area to require some material or significant contribution to such a violation. The Agency believes that something greater than a molecular impact is required. Further, EPA has adjusted the boundaries of former Group II and III areas designated nonattainment in reliance on its general technical expertise and has not conducted, for example, rigorous modeling analysis. The timeframes set forth in the statute do not contemplate such detailed analysis. For example, the law mandates that all of the areas designated nonattainment by operation of law upon enactment of the Act must submit SIP revisions by November 15, 1991. Such tight deadlines do not afford time for more sophisticated technical analysis.

areas were actually designated nonattainment by operation of law.[10]

Where appropriate, EPA has exercise both types of discretion in res -onding to comments addressing former Group II and III areas that were announced as initial PM–10 nonattainment areas in the March 1991 notice. Specifically, EPA has considered whether a violation within the meaning of part 50, appendix K, occurred and EPA has adjusted nonattainment area boundaries for those areas based on the standard set forth in section 107(d)(1)(A)(i).[11]

B. Responses to Comments

1. Former Group I Areas

a. Hayden/Miami Planning Area, Arizona. Comments were submitted on behalf of ASARCO, Incorporated (ASARCO), addressing EPA's designation of the Hayden/Miami Planning Area in Arizona as an initial PM–10 nonattainment area. ASARCO acknowledged that as a former Group I area "the 'Hayden/Miami' Group I area identified in the notice published at 52 FR 29383 on August 7, 1987, must be designated a nonattainment area * * *" However, ASARCO stated that the March 1991 notice "expands the boundaries of the Hayden/Miami nonattainment area far beyond the limits of the planning area used by the state when developing its PM–10 SIP for Hayden." ASARCO commented that these boundaries are unsupported by ambient monitoring data, information the State of Arizona discovered in its SIP development for the Group I area, EPA guidance documents, and the language of the amended law. Consequently, ASARCO requested that the boundaries of the area be substantially revised.

ASARCO has misinterpreted the legal weight of the October 1990 notice. In its August 1987 notice, EPA only generally referenced the "Hayden/Miami area." In the October 1990 notice, EPA modified and clarified this, enumerating in detail, portions of the Hayden/Miami planning area deemed Group I. These modifications, in turn, were adopted by operation of law upon enactment of the Act (see section 107(d)(4)(B)(i)).

ASARCO argues that EPA can disregard the boundaries in the October 1990 notice because it "did not 'modif[y]' the 'identification' of PM–10 nonattainment areas; rather, that notice defined the boundaries of nonattainment areas that had already been identified in previous notices." This extreme reading of section 107(d)(4)(B)(i) has no basis in reason. An area is identified by its boundaries. Thus, when EPA modified the boundary of a Group I area in its October 1990 notice, it was modifying the identification of the area as section 107(d)(4)(B)(i) expressly contemplates.

ASARCO also argues that the October 1990 notice is not within the intended ambit of section 107(d)(4)(B)(i) because the operative language appeared in the legislative history before the publication of the October notice. This argument ignores the express and plain meaning of the text of section 107(d)(4)(B)(i). That provision states that any modification of the August 1987 notice "before the date of enactment of the Act" is effective. It clearly does not state, for example, that only modifications occurring before legislation or legislative history was introduced are effective, as the commenter apparently believes it should be read.

The EPA has no basis to disregard the boundaries for this former Group I area as modified in the October 1990 notice and adopted by operation of law. ASARCO argues, for example, that EPA should adjust the boundaries because they are inconsistent with the Group I SIP develop for that area, monitoring data, and EPA guidance documents. That the State of Arizona was developing a SIP focusing on certain portions of this former Group I area does not compel EPA either to agree with the SIP's scope or to adjust the area boundaries to comport with that scope. In fact, EPA has taken no action on the former Group I SIP for this area. Generally, prior to modifying the boundaries in the October 1990 notice, EPA consulted with the affected States, reviewed technical information, and was guided by applicable EPA policy. Weighing these various factors, EPA set the boundaries it believed appropriate, and on November 15, 1990 these boundaries were adopted as the nonattainment boundaries for the former Group I area in question.

The Governor of Arizona also submitted comments addressing the Hayden/Miami PM–10 nonattainment area. The Governor commented that the State has submitted a SIP demonstrating attainment in the Hayden area. He also commented that since 1988, monitoring in the vicinity of industrial sources at Miami has not revealed any violations of the PM–10 standards. The Governor stated that the State of Arizona "will be submitting a SIP revision to designate only the area within T5S, R15E as nonattainment." However, in an attachment to the Governor's letter, he provided a more detailed and apparently inconsistent description of portions of Hayden that the Governor believed should be designated nonattainment.

As indicated in response to ASARCO's comments, there is no evidence that EPA intended to provide boundaries for the Hayden/Miami area that are different from those identified in the October 1990 notice and announced in EPA's March 1991 notice in reliance on the October notice. Essentially, there is no evidence of EPA error. Moreover, as explained in the response to ASARCO's comments, EPA is in no way obligated to set nonattainment boundaries for former Group I areas according to the scope of the State's implementation plan for the former Group I area. In fact, EPA has taken no action on the former Group I SIP for this area. In sum, the boundaries for this initial PM–10 nonattainment area will remain as set forth in the March 15, 1991 Federal Register notice.

b. New Haven, Connecticut. The Governor of Connecticut and the State of Connecticut Department of Environmental Protection (CDEP) submitted comments requesting that the boundaries for the New Haven nonattainment area be modified to include only that portion of the city east of the Quinnipiac River. The CDEP noted that CDEP staff had sought to have the boundary revised in the October 31, 1990 notice but that EPA had informed them that "a municipality was the smallest geographic area that could be designated." The CDEP also commented that CDEP staff were told by EPA that the State would have another opportunity to refine the boundaries.

---

[10] Former Group II areas, for example, present an extreme case, clearly compelling EPA to exercise discretion in this way. The August 1987 and October 1990 Federal Register notices stated that any area of a State not listed as Group I or II is considered to be Group III (see 52 FR 29384 and 55 FR 45799). Where EPA determined that such an area measured a violation of the PM–10 standard prior to January 1, 1989, it would be irrational for the Agency to designate as nonattainment entire portions of States far removed from and not significantly contributing to the area monitoring the violation. Rather, EPA must exercise some judgment.

[11] In contrast, unless EPA has committed an error, the statute's treatment of former Group I areas does not contemplate such adjustment. As mentioned, the provision of the Act addressing the nonattainment designation of former Group I areas is quite specific. Section 107(d)(4)(B)(i) calls for the nonattainment designation of "each area identified in 52 FR 29383" or as subsequently modified before the date of enactment of the Act. Thus, the law specifies "each area" that was designated nonattainment. The EPA cannot rely on the Act's definition of nonattainment to adjust these area. The EPA believes such adjustment would contravene the general canon of statutory construction that when interpreting the Act, specific provisions control those that are more general. In this case, EPA believes that Congress has specified that former Group I areas will be nonattainment and EPA cannot rely on the general definition of nonattainment area to adjust the boundaries of these area.

The EPA regrets any miscommunication between Connecticut and EPA that may have occurred when [illegible]ing the modification of Group I [illegible]for the October 1990 notice. However, Connecticut has not submitted any documentation indicating that EPA committed an error in designating the City of New Haven as an initial PM–10 nonattainment area, in reliance on the October 1990 notice. There is no evidence that EPA intended that the boundaries for this area be different from those set forth in the March notice and through administrative oversight or other error failed to so provide. Thus, the City of New Haven is a PM–10 nonattainment area, as described in the March 1991 notice.

c. Pinehurst, Idaho. The Administrator of the Idaho Division of Environmental Quality (IDEQ), on behalf of the Governor, requested that EPA significantly adjust the City of Pinehurst nonattainment area. Believing the nonattainment problem in this area to be a valley airshed problem, IDEQ requested that EPA expand the boundaries to include additional townships along Silver Valley.

There is no documented evidence that EPA committed an error when it modified the boundary for this area in its October 1990 notice or as reiterated [illegible]s March 1991 notice announcing the [illegible]l PM–10 nonattainment [illegible]gnations. Thus, there is no basis to alter the boundaries identified as the "City of Pinehurst" and set forth in the March 1991 notice.

Nevertheless, to the extent that the boundaries described in the State's correspondence are broader than those initially designated nonattainment, EPA is considering whether the State's submittal should be treated as an unsolicited redesignation request within the meaning of section 107(d)(3)(D) of the Act. Under that provision EPA must "approve or deny" a revised designation "[w]ithin 18 months of receipt of a complete State redesignation submittal * * *."

If EPA finds that the submittal is complete and approves the submittal, then the City of Pinehurst and any revised nonattainment area surrounding it in the Silver Valley will be subject to somewhat different statutory deadlines for SIP submittal, attainment demonstration, etc. Compare, e.g., section 189(a)(2)(A) (first SIP for initial nonattainment area due 1 year from enactment) and section 189(a)(2)(B) (first SIP for later redesignated nonattainment area due 18 months from the [illegible]ttainment designation). However, [illegible]A notes that nothing in the Act prohibits the State from submitting a SIP for the entire area they have identified by November 15, 1991, the SIP submittal deadline applicable to the portion of the area initially designated nonattainment and announced in the March 15, 1991 notice.

d. Pocatello, Idaho. The Administrator of the IDEQ submitted information to EPA indicating what portion of the Pocatello area in Bannock and Power counties should be designated nonattainment. In the October 1990 and March 1991 notices, this area was listed as "City of Pocatello." Both of those notices identified Bannock and Power as the affected counties. After reviewing IDEQ's submittal, EPA realized that the "City of Pocatello" sits only in Bannock County. Thus, there is a disconnect or gap between EPA's listing of the "City of Pocatello" as the nonattainment area for both Bannock and Power Counties.

As evidenced by its listing of both counties, EPA intended to include that portion of the Pocatello area in both Bannock and Power Counties in the October 1990 notice. The EPA now realizes that listing was in error. This error, then, was adopted inadvertently in EPA's March 1991 notice announcing the initial nonattainment areas for PM–10. The EPA corrects this error in today's notice as explained in the "Legal Framework" discussion above. The EPA has clarified the boundary for this area consistent with IDEQ's request and EPA's original intent.

The Shoshone-Bannock Tribes also submitted information addressing the boundary for the Pocatello nonattainment area. The Tribes indicated that they agreed with the clarification and expansion of the Pocatello nonattainment area as indicated in IDEQ's submittal. They also requested that EPA include an additional section which they said would include a seasonally operated "open pit silica mine with a rock crushing operation and attendant storage piles * * *."

The EPA has corrected the error it committed with respect to Pocatello as described previously. However, EPA does not believe that the additional section identified by the Tribes was among those intended to be included with the initial Pocatello nonattainment area. Thus, at this time, EPA will not adjust the boundaries for this area to include this section. Nevertheless, if after further study EPA concludes that there is evidence that this area violates the PM–10 standards or significantly contributes to such a violation in a nearby area, then EPA would initiate the process to redesignate this area nonattainment pursuant to section 107(d)(3)(A) of the Act.

e. Cook County, Illinois. The EPA received no formal comments about the portion of Cook County, Illinois, designated nonattainment for PM–10. However, in reviewing records subsequent to the publication of the March 1991 notice, EPA realized that a highway number in the description of this area had been inadvertently mislabeled. This announcement corrects that error in accordance with the legal rationale described above.

f. Presque Isle, Maine. The Maine Department of Environmental Protection (MDEP) and the City of Presque Isle submitted comments addressing EPA's designation of the City of Presque Isle as an initial PM–10 nonattainment area. The City of Presque Isle commented that Presque Isle was incorrectly placed in Group I in August 1987, the notice first announcing groupings after EPA revised the NAAQS for PM–10 in July 1987. Thus, the city requested that it be removed from nonattainment status. The MDEP also objected to the designation of the city as nonattainment and, alternatively, argued that the boundaries of the nonattainment area should be reduced to include a ½ mile radius in the city's urban center. The MDEP submitted a number of supporting documents.

The designation of Presque Isle as nonattainment and the scope of its boundaries appears to be a judgment dispute. In its October 1990 notice, EPA modified the boundaries for this Group I area as it believed appropriate. This area and attendant boundaries then became nonattainment for PM–10 by operation of law upon enactment of the Act. The EPA regrets any miscommunication between EPA and MDEP which may have occurred during the development of the October notice. Nevertheless, this is not a situation where EPA intended that the boundaries in the October 1990 notice be different and, through an error, failed to so provide. Thus, as announced in EPA's March 1991 notice, the boundaries of the Presque Isle PM–10 nonattainment area will consist of the entire city (see section 107(d)(4)(B)(i)).

g. Libby, Montana. The State of Montana submitted information to EPA in conjunction with EPA's development of the October 1990 notice. The EPA reviewed this information and intended to modify the boundaries for this area in accordance with the State's submittal. Through administrative oversight, this modification was not reflected in the October 1990 notice and, consequently, was not announced in the March 1991 notice. The EPA has corrected that error

in today's notice in accordance with the legal rationale described above.

h. Missoula County, Montana. The Governor of Montana submitted comments to EPA indicating that EPA committed an error in modifying the Group I area of concern for this county in EPA's October 1990 notice. Through administrative oversight EPA inadvertently omitted sections of this area that records indicate it intended to include. This error then was reiterated in EPA's March 1991 notice announcing the initial nonattainment areas. The EPA has corrected its error in accordance with the legal rationale explained above.

i. Butte, Montana. As was the case with Libby, the State of Montana submitted information to EPA in conjunction with EPA's development of the October 1990 notice and, after deciding to include it in the notice, EPA inadvertently omitted the information. As with Libby, this error was reiterated in the March 1991 notice announcing the initial PM–10 nonattainment areas. The EPA has remedied its administrative oversight and corrected the boundaries as originally intended in accordance with the legal rationale described above.

In a February 27, 1991 letter to EPA, the Governor of Montana submitted additional information addressing Libby's PM–10 boundaries. The Governor indicated that Montana had completed technical analyses since the publication of the October 1990 notice and submitted detailed boundaries. The Governor indicated that the suggested boundaries would expand the Butte nonattainment area, as listed in the October 1990 notice, far beyond the city limits. Upon comparing the nonattainment boundary submitted by the Governor and the corrected boundary in today's notice, EPA has determined that the boundaries are similar; however, the Governor's suggested boundary for the area is slightly broader. There is no evidence that EPA intended to include the additional area identified in the Governor's letter when EPA modified Group I areas in the October 1990 notice (or announced the initial PM–10 nonattainment areas in the March 1991 notice, in reliance on the October 1990 notice) and through administrative error failed to so provide. Thus, EPA will not adjust the boundary for this area to include the additional area identified in the Governor's letter.

However, to the extent that the boundary described in the Governor's correspondence is broader than that listed in today's notice, EPA will treat the Governor's submittal as an unsolicited request for redesignation with the meaning of section 107(d)(3)(D) of the Act. Under that provision, EPA must approve or deny a revised designation within 18 months of receipt of a complete State redesignation submittal.

If EPA finds that the submittal is complete and approves the submittal, then the additional area submitted by the Governor for the Butte nonattainment area will be subject to somewhat different statutory deadlines for SIP submittal, attainment demonstrations, etc. Compare, e.g., section 189(a)(2)(A) (first SIP for initial nonattainment area due 1 year from enactment) and section 189(a)(2)(B) (first SIP for later redesignated nonattainment areas due 18 months from the nonattainment designation). However, EPA notes that nothing in the Act prohibits the State from submitting a SIP for the entire area they have identified by November 15, 1991, the SIP submittal deadline applicable to the portion of the area initially designated nonattainment and announced in today's notice.

j. Anthony, New Mexico (Dona Ana County). The State of New Mexico Environment Department (NMED) submitted comments addressing the nonattainment designation of the Anthony, New Mexico, area. The NMED stated that Anthony is a rural fugitive dust area (RFDA) and under EPA's "Rural Fugitive Dust Policy" (RFDP), "RFDA sites shall not be designated nonattainment." Further NMED stated that EPA's RFDP remains in effect because EPA indicated "in the October 29, 1990 Federal Register, the existing RFDA policy shall remain in effect until it is revised by EPA." Finally, NMED requested that former RFDA's now designated nonattainment have most of their requirements waived if EPA discontinues the RFDP.

Two 1977 EPA memoranda constitute what has been called EPA's "Rural Fugitive Dust Policy." These memoranda set forth treatment of areas identified as "Rural Fugitive Dust Areas" for the purposes of attainment/nonattainment status as well as SIP development and new source review under the Act before the 1990 Amendments (see, e.g., 52 FR 24716 (July 1, 1987) (historical discussion)). This policy was issued when TSP was the indicator for particulate matter. When EPA revised the particulate matter NAAQS in July 1987, changing the indicator to PM–10, EPA proposed a number of alternative policies. In that notice EPA indicated that the existing policy would remain in effect until EPA adopted a final policy (see 52 FR 24716 (July 1, 1987)).

Since then, the 1990 Amendments to the Act were enacted. As discussed, section 107(d)(4)(B)(i) of the Act provides that all former Group I areas were designated nonattainment by operation of law upon enactment of the Amendments. Further, EPA is unaware of any error it may have committed when it modified the boundary for the Anthony area in its October 1990 notice. Thus, on November 15, 1990 the Anthony, New Mexico, area (as listed in the October 1990 notice) became nonattainment for PM–10 by operation of law. The EPA announced this designation in its March 1991 notice.

The EPA believes the waiver provision alluded to in NMED's comments provides a statutory alternative to EPA's RFDP (see section 188(f) of the Act). The EPA intends to provide guidance to the States on the meaning of section 188(f) later this year. In the meantime, areas designated nonattainment for PM–10, including former RFDA's, should proceed with SIP development in accordance with the new law.

The October 29, 1990 Federal Register notice referenced by NMED was EPA's semiannual Regulatory Agenda (see 55 FR 45134, 45198). This notice is published for informational purposes and has no regulatory effect. In addition, the October publication preceded enactment of the Act. Any confusion created by the reference to the RFDA in that notice should be cleared by today's notice. Finally, EPA notes that former RFDA's will receive the same treatment that all other areas requesting a waiver will receive. If EPA finds that an area satisfied the operative legal standard then, within the construction of the law, EPA will waive those requirements it believes appropriate.

k. Jefferson County, Ohio. Ohio EPA (OEPA) submitted comments indicating that EPA erred in setting the boundaries for that portion of Jefferson County, Ohio, that was designated nonattainment at enactment. After examining the documentation submitted by OEPA, EPA agrees that an error was committed. In both the October 1990 and March 1991 notices, EPA identified a boundary for this area that was incomplete. It appears, for example, that EPA failed to clearly delineate a western boundary. The EPA has corrected its error in accordance with legal rationale described above.

l. El Paso, Texas. The Texas Air Control board submitted comments on this area noting that "on March 8, 1991, the Texas Air Control Board (TACB) passed a resolution * * * approving the Texas Air Control Board Designation Proposal, where the nonattainment area for PM–10 in El Paso was changed to the

City of El Paso including Fort Bliss." Apparently, TACB sought to clarify that Fort Bliss, which is within the city limits but not part of the municipal entity, was included in the City of El Paso nonattainment area. Generally, when EPA lists municipal boundaries or other boundaries identifying a perimeter, all of the area within those boundaries is part of the nonattainment area unless otherwise specified. More specifically, Federal facilities are subject to the requirements of the Act unless thay have been expressly exempted from a requirement because the President has determined that it is in the "paramount interest of the United States to do so" (see section 118 of the amended Act). The EPA is unaware of any such exemption for Fort Bliss. Thus, as indicated in EPA's March 1991 notice, the City of El Paso, and any area within its municipal boundaries, is an initial PM–10 nonattainment area.

m. Wallula, Washington. The Governor of Washington submitted information to EPA requesting that the Wallula nonattainment area be expanded to include Kennewick, Washington. The Governor's submittal stated that these two areas should be combined into one nonattainment area because the Wallula nonattainment area does not include all of the major sources which contribute to the air quality problem in the area. The Governor also noted the close proximity of the monitoring sites in the two areas.

The Wallula area, as described in the October 1990 and March 1991 Federal Register notices, was designated nonattainment by operation of law upon enactment. Further, there is no evidence that in developing either of these notices EPA intended the boundary to be different, but through an error failed to so provide. Thus, the Wallula area is currently a moderate PM–10 nonattainment area. As such, the State of Washington must submit a SIP revision for the area by November 15, 1991 containing the applicable statutory requirements and demonstrating attainment by December 31, 1994 (see generally subpart 4 of part D of title I of the Act).

The EPA agrees that Kennewick has a PM–10 air quality problem and has already initiated the process to redesignate this area nonattainment (see January 31, 1991 letter to the Governor of Washington from the Regional Administrator of EPA Region X; see also 56 FR 16274 (April 22, 1991)). However, absent error, EPA cannot expand the boundaries of the Wallula nonattainment area to include Kennewick. If Kennewick is designated as an additional PM–10 nonattainment area, it will be subject to statutory deadlines for SIP submittal, attainment demonstration, etc., which are different from those of Wallula. However, EPA notes that nothing prevents the State from submitting a SIP for the entire Wallula and Kennewick area by the November 15, 1991 SIP submittal deadline applicable to the initial PM–10 nonattainment areas and, consequently, treating this as a single nonattainment area. The opposite is not true. Under the law, the State of Washington cannot defer submittal of a SIP for Wallula until a SIP for Kennewick is due, assuming Kennewick is ultimately redesignated to nonattainment.

n. Yakima, Washington. The EPA received no formal comments about the portion of Yakima, Washington, designated nonattainment for PM–10. However, in reviewing records subsequent to the publication of the March 1991 notice, EPA realized that a set of coordinates were missing from the boundary description for the area. This announcement corrects that error in accordance with the legal rationale described above.

2. Former Group II and III Areas

a. Ajo, Arizona. Comments were submitted on behalf of the Phelps Dodge Corporation (Phelps Dodge) addressing EPA's announcement of the Ajo planning area as an initial PM–10 nonattainment area. Phelps Dodge commented that air quality data do not show "a violation of the national ambient air quality standard for PM–10 before January 1, 1989 (as determined under part 50, appendix K of title 40 of the Code of Federal Regulations)" because only one exceedance of the 24-hour standard has been measured (see section 107(d)(4)(B)(ii) of the Act). Phelps Dodge commented that, alternatively, the exceedance in question should be treated as an exceptional event.

The PM–10 standard is expressed in terms of an expected value. Section 3.1 of 40 CFR part 50, appendix K, describes the adjustments that must be made to 24-hour data in order to estimate the number of expected exceedances when PM–10 sampling is not conducted on a daily basis. Section 3.1 states that "[i]n this adjustment, the assumption is made that the fraction of missing values that would have exceeded the standard level is identical to the fraction of measured values above this level." The regulations recognize that this adjustment may lead to overprediction. Thus, § 3.1 also states as follows: "To reduce the potential for overestimating the number of expected exceedances, the correction for missing data will not be required for a calendar quarter in which the first observed exceedance has occurred if: (a) There was only one exceedance in the calendar quarter, (b) everyday sampling is subsequently initiated and maintained for 4 calendar quarters in accordance with 40 CFR 58.13, and (c) data capture of 75 percent is achieved during the required period of everyday sampling."

Sampling is conducted once every 6 days at the Ajo Station monitoring site. After the exceedance in question was measured, daily sampling was not commenced. Thus, the regulations require correction for the missing data. After applying the adjustment referenced above, the expected exceedances of the 24-hour standard at Ajo constitute a violation of the PM–10 standard consistent with part 50, appendix K.

Section 2.4 of part 50, appendix K, governs the inquiry of whether the exceedance measured at Ajo should be treated as an "exceptional event." That regulation states that an exceptional event is "an uncontrollable event caused by natural sources of particular matter or an event that is not expected to recur at a given location." Phelps Dodge commented that "gusts in excess of 20 mph" were measured at the closest meteorological station on the day the exceedance was measured. The level of the wind gusts was noted presumably to illustrate the anomalous nature of the event. However, Phelps Dodge submitted no information indicating whether that high wind was the cause of the exceedance and, if so, whether the wind was likely to recur. In fact, Phelps Dodge suggested that the wind gusts were due to the area's seasonal monsoon. Specifically, Phelps Dodge stated that "[t]he conditions at Ajo were characteristic of monsoon weather patterns in southern Arizona." Further, recent meteorological data collected near Ajo by the Arizona Department of Environmental Quality indicate that hourly wind gusts greater than or equal to 20 miles per hour occur at least 7 days per year. The EPA, therefore, does not believe the event is properly deemed exceptional. Thus, as described in the March 1991 notice, the Ajo planning area is an initial PM–10 nonattainment area.

Finally, the State of Arizona appears to agree with the Ajo boundaries. In a May 15, 1991 letter to EPA, the Governor of Arizona suggested boundaries for the Ajo nonattainment area that were consistent with those set forth in EPA's March 1991 announcement.

b. Bullhead City, Arizona. The Arizona Center for Law in the Public

Interest (the Center) commented that "EPA should add the Bullhead City, Arizona, planning area (Mohave County) to the list of initial PM–10 nonattainment areas based on its violation of the annual standard in 1989 and its exceedance of the 24-hour standard in the same year."

Bullhead City was a former PM–10 Group III area. Section 107(d)(4)(B)(ii) governs the initial nonattainment designations of former Group II and III areas. That provision indicates that a former Group II or III area can be designated nonattainment by operation of law upon enactment of the Act only if "monitoring data show a violation of the NAAQS for PM–10 before January 1, 1989 * * *." Violations of the standard occurring in 1989 would not qualify as a violation occurring before January 1, 1989.

Note, however, that pursuant to section 107(d)(3) of the Act, EPA has initiated the process to redesignate this area as nonattainment for PM–10. By letter dated January 24, 1991, the Regional Administrator of EPA Region IX notified the Governor of Arizona that available information indicates that Bullhead City should be redesignated nonattainment for PM–10 and, on that basis, called on the State to submit a redesignation for the area (see also 56 FR 16274 (April 22, 1991)).

c. Payson, Arizona. The Center submitted comments claiming that Payson, Arizona, should be designated as an initial PM–10 nonattainment area. The Center stated that "Payson violated the annual mean PM–10 standard in 1988 and 1989, and also recorded five violations of the 24-hour standard in 1989 * * *."

Payson was a former Group III area. For the reasons noted in the Bullhead City response, those violations occurring on or after January 1, 1989 cannot be a basis for designating Payson as an initial PM–10 nonattainment area.

Further, the 1988 data record for this area did not meet EPA's general data capture requirements (i.e., was incomplete) and was not otherwise sufficiently unambiguous to establish nonattainment (see § 2.3 of part 50, appendix K). More specifically, § 2.3 states that it is "generally necessary" for a monitoring site to have data which includes a minimum of 75 percent of the scheduled PM–10 samples per quarter in order to assess whether a violation of the standard has been recorded. With a minimum sampling frequency of once in 6 days, a valid annual mean must be based on at least 48 observations (12 observations per calendar quarter). However, § 2.3 also states that there are "less stringent data requirements for showing that a monitor has failed an attainment test and thus has recorded a violation of the particulate matter standard." Section 2.3 sets out examples of how nonattainment may be demonstrated when a monitoring site does not meet the completeness criteria. With respect to the annual standard, § 2.3 provides, for example, that nonattainment may be demonstrated "on the basis of quarterly mean concentrations developed from observed data combined with one-half the minimum detectable concentration substituted for missing values."

Applying this analysis to the data collected in 1988 at the Payson monitoring station, EPA concluded that Payson should not be an initial PM–10 nonattainment area. First, according to the State of Arizona data report, a total of 19 PM–10 samples were produced in 1988 by the Payson monitor. This clearly fails the completeness requirement. If, then, one-half the minimum detectable concentration of (4.0 micrograms per cubic meter ($\mu g/m^3$)] is substituted for the missing values (say, 29, i.e., 29+19=48), then the resulting annual mean would be approximately 32 $\mu g/m^3$, which is below the annual PM–10 standard.

However, similar to the Bullhead City situation, pursuant to section 107(d)(3) of the Act, EPA has initiated the process to redesignate this area as nonattainment for PM–10. By letter dated January 24, 1991, the Regional Administrator of EPA Region IX notified the Governor of Arizona that available information indicates that Payson should be redesignated nonattainment for PM–10, and on that basis called on the State to submit a redesignation for the area (see also 56 FR 16274 (April 22, 1991)).

d. Tucson, Arizona. The Arizona Center for Law in the Public Interest also commented that Tucson should be an initial PM–10 nonattainment area. The Center's request was based on monitoring data from three different sites in the Tucson area.

First, the Center stated that the Orange Grove Road sampling station monitored one 24-hour exceedance in 1985 and two in 1988. Since the 1985 exceedance was produced prior to the promulgation of the PM–10 NAAQS (see generally 52 FR 24634, July 1, 1987), EPA did not adjust it for incompleteness of sampling and counted it as 1.0 in the calculation of the average number of estimated exceedances.[12] The analysis specified in § 3.2 of part 50, appendix K, was then applied to the two exceedances observed in 1988.[13] On this basis, EPA calculated 3.1 exceedances for 1988. Section 2.1 specifies that the number of exceedances is determined by averaging the number of exceedances over the past 3 calendar years. Therefore, the number of expected exceedances for the 3-year period from 1986–88 is 1.033. After the rounding called for in § 2.1, 1.033 would be less than or equal to 1.0 which does not constitute a violation of the standard. Assuming for purposes of illustration that the 4-year period from 1985–88 is representative, then, consistent with § 2.3, the 1985 exceedance may be considered. In this situation, the

[12] Generally when sampling is not conducted on a daily basis, EPA adjusts exceedances of the 24-hour standard in order to estimate the number of expected exceedances (see § 3.1 of 40 CFR part 50, appendix K). Section 3.1 states that "[i]n this adjustment, the assumption is made that the fraction of missing values that would have exceeded the standard level is identical to the fraction of measured values above this level."

However, some monitoring of PM–10 occurred prior to the promulgation of part 50, appendix K. This is true of the 24-hour exceedance measured in 1985 at the Orange Grove Road sampling site in Tucson. Part 50, appendix K, was published on July 1, 1987 (effective date of July 31, 1987) when EPA revised the indicator for particulate matter to PM–10 (see generally 52 FR 24634). When it revised the PM–10 standards and promulgated appendix K, EPA did not designate areas and, therefore, could not have intended to subject pre-promulgation data to adjustment due to less than daily sampling for the purpose of designating an area nonattainment. Further, because those collecting data before the rule's promulgation had no notice of the consequences of less-than-every-day sampling, it would be unfair to adjust data collected pre-promulgation at this time. Thus, EPA interprets appendix K such that data collected prior to the rule's promulgation and used for establishing an area's designation is not construed as constituting "incomplete data" within the meaning of appendix K for the narrow purpose of adjusting data for less than daily sampling.

The manner in which the Agency has implemented part 50, appendix K, provides evidence of the Agency's general concern with the unfairness of subjecting pre-promulgation data to adjustment for incompleteness, even before the newly revised Act provided designation for PM–10. In a June 1988 policy document, EPA noted that if the first exceedance in an area occurred prior to the promulgation of the PM–10 standard, it would be exempt from the daily sampling requirement (see generally Response to Questions Regarding PM–10 State Implementation Plan (SIP) Development at page 27). Finally, there is no evidence in the newly revised Act that Congress intended EPA to apply appendix K in a manner different from how the Agency had applied it prior to enactment.

[13] The computations for estimating exceedances to adjust for missing data are performed quarterly. There are special appendix K formulas to address the situation with unscheduled samples in order to reduce a bias which may be introduced by nonuniform sampling during the quarter. During the third quarter of 1988, when the two exceedances occurred, there was a change in sampling frequency from every-other-day to every-day. Accordingly, for the purposes of estimating exceedances, the sample schedule was assumed to be every-other-day for the entire quarter and, for computational purposes, some of the every-day samples are treated as unscheduled.

expected number of exceedances would be 4.1 over a 4-year period which is 1.025. After the rounding called for in § [illegible]s would be less than or equal to 1.[illegible] would not constitute a violation of the standard.

The Center commented that elevated levels of PM–10 were monitored at the Congress Street station. Specifically, the Center states that the annual standard was violated in 1989 and that three exceedances were monitored in 1989. Tucson was a former Group II area. As noted, under section 107(d)(4)(B)(ii) a former Group II area can be designated nonattainment by operation of law upon enactment of the Act only if "monitoring data show a violation of the national ambient air quality standard for PM–10 before January 1, 1989 * * *." Because the violations cited by the Center occurred on or after this date, they would not constitute a basis for designating Tucson as an initial PM–10 nonattainment area.

The Center also commented that the monitor located at Prince Road monitored a violation of the 1989 annual standard. Again, EPA notes that a violation must be monitored prior to January 1, 1989 to constitute a basis for designating Tucson as an initial PM–10 nonattainment area.

Correcting EPA's announcement of the initial PM–10 nonattainment areas is the [illegible]question addressed by the Agency in today's action. Nevertheless, the Center has alerted EPA to possible attainment problems in the Tucson area which may be a basis for redesignating this area as nonattainment pursuant to section 107(d)(3) of the Act. The EPA will review the PM–10 data collected in Tucson on or after January 1, 1989 and expects that it will reach a conclusion about Tucson's status (and whether to initiate the section 107(d)(3) redesignation process) sometime this Fall.

e. Bonner County, Idaho. The Administrator of the IDEQ submitted comments addressing the Bonner County nonattainment area. The EPA announced that "Bonner County" was an initial nonattainment area in the March 1991 notice. The IDEQ submitted a more detailed description, isolating that portion of Bonner County believed to warrant nonattainment designation. Consistent with the definition of nonattainment area in section 107(d)(1)(A)(i) of the Act, in today's notice EPA has refined the boundaries for this area as requested by IDEQ.

f. Oglesby, Illinois. The Governor of Illinois submitted information to EPA r[illegible]ing that an additional section be [illegible]to that portion of Oglesby designated nonattainment for PM–10. Consistent with the definition of nonattainment area in section 107(d)(1)(A)(i), EPA has added the section and announces that the Oglesby PM–10 nonattainment area is as described in Table L

In January 28, 1991 correspondence to the Governor of Illinois, the Regional Administrator of EPA Region V had initiated the process to redesignate as nonattainment this portion of LaSalle County. That process has been mooted by the action announced in today's notice.

g. Clinton Township, Indiana. The Indiana Department of Environmental Management (IDEM) requested that the boundaries for the Clinton Township nonattainment area be reduced to include eight sections in the Township and submitted technical information supporting their request. The EPA has reviewed the information submitted by IDEM and agrees that the area should be modified to include only the eight sections identified. The IDEM's information shows that violations of the standard are attributable to a coal mine in the area. The EPA believes that limiting the boundaries to the eight sections suggested by IDEM does not exclude any significant sources or any likely nonattainment portions of this area. Thus, EPA is refining the boundaries of that portion of Clinton Township that is designated as nonattainment for PM–10 to include these eight sections, consistent with the definition of nonattainment area in section 107(d)(1)(A)(i) of the Act.

h. Rochester, Minnesota. The Minnesota Pollution Control Agency (MPCA) commented on the City of Rochester's nonattainment status. The MPCA requested that the boundaries for the nonattainment area not include the entire city. They submitted information supporting this request including documents indicating that EPA had intended to include the modified boundaries in its March 1991 notice but through administrative oversight failed to do so.

The EPA believes that the nonattainment area should be less than the entire city, and EPA intended to provide more refined boundaries in its March 1991 notice. Violations in Rochester have been attributed to coal storage at a power plant. This facility is the only significant source in the city. The EPA's refined nonattainment area includes the source and all the area EPA believes to be monitoring violations of the NAAQS due to the source. Thus, consistent with the definition of nonattainment area in section 107(d)(1)(A)(i) of the Act, EPA has refined the nonattainment area.

Rochester Public Utilities (RPU) also submitted comments addressing this area. The RPU requested that EPA reconsider Rochester's nonattainment designation. The RPU commented that no violation of the NAAQS has occurred in the area. Specifically, RPU asserted that there has been no violation of the NAAQS because only one exceedance of the standard has been measured and there have never been two exceedances during any 1 year. Further, RPU commented that the event causing the exceedance was an "exceptional meteorological event" and should not trigger a nonattainment designation. The RPU also commented that the sampler malfunctioned and did not reliably measure PM–10 on the day the exceedance occurred.

The PM–10 NAAQS is expressed in terms of an expected value. Section 3.1 of 40 CFR part 50, appendix K, describes the adjustments that must be made to 24-hour data in order to estimate the number of expected exceedances when PM–10 sampling is not conducted on a daily basis. Section 3.1 states that "[i]n this adjustment, the assumption is made that the fraction of missing values that would have exceeded the standard level is identical to the fraction of measured values above this level." The regulations recognize that this adjustment may lead to overprediction. Thus, § 3.1 also states as follows: "To reduce the potential for overestimating the number of expected exceedances, the correction for missing data will not be required for a calendar quarter in which the first observed exceedance has occurred if: (a) There was only one exceedance in the calendar quarter, (b) everyday sampling is subsequently initiated and maintained for 4 calendar quarters in accordance with 40 CFR 58.13, and (c) data capture of 75 percent is achieved during the required period of everyday sampling."

Sampling is conducted once every 6 days at the site where the exceedance in Rochester was measured. Daily sampling was not commenced after the exceedance. Thus, the regulations require a correction for the missing data. After applying the adjustment referenced above, the expected exceedances of the 24-hour NAAQS at Rochester constitutes a violation of the PM–10 NAAQS consistent with part 50, appendix K.

Section 2.4 of part 50, appendix K, governs the inquiry of whether the exceedance measured at the Rochester monitoring site should be treated as an "exceptional event." That regulation states that an exceptional event is "an uncontrollable event caused by natural sources of particulate matter or an event

that is not expected to recur at a given location." The RPU commented that extremely high winds occurred on the day the exceedance was measured. The RPU cited a memorandum by MPCA requesting that EPA treat the exceedance as an exceptional event and noting that the Rochester National Weather Service Office measured wind speeds in excess of 40 miles per hour on the day the exceedance was measured.

As noted, EPA believes that coal storage at a power plant is responsible for the exceedance. Thus, the event in question would not qualify for treatment as an exceptional event under the first prong of the exceptional events standard since it is controllable and was not caused by natural sources. Further, EPA has no basis to believe the event would meet the second prong of the operative legal standard. While high winds were cited, no information was submitted indicating whether that high wind was the cause of the exceedance and, if so, whether the wind was likely to recur.

The EPA also believes there is insufficient technical basis to cast doubt upon the reliability of the measurement. The RPU noted that it had been informed by MPCA that the sampler was encumbered with large particles and possibly a dirty sampler head "such that quantification of PM–10 could not be accurately and reliably measured * * *." Previously, MPCA had submitted to EPA a microscopist's analysis of the filter sample. The analysis concluded that large particles were collected which should not have been measured and suggested that the sample point be invalidated. The EPA found the microscopist's analysis technically deficient since it did not document the quantity of large particles collected and encumbering the sampler. Thus, EPA will not disregard the data due to the inadequately substantiated claim that the sampler malfunctioned.

In sum, EPA has adjusted the boundaries for this area in light of MPCA's comments and consistent with the definition of nonattainment area under section 107(d)(1)(A)(i) of the Act. However, for all of the reasons explained above, EPA denies RPU's request to totally eliminate this area's nonattainment designation.

i. Audrain County, Missouri. The Missouri Department of Natural Resources (MDNR) submitted comments addressing EPA's designation of Audrain County, Missouri, as an initial PM–10 nonattainment area. The EPA identified Audrain County as an initial nonattainment area because of an exceedance of the PM–10 24-hour standard occurring on August 1, 1987. The MDNR submitted information suggesting that these data were invalid. After reviewing the technical information associated with this measured exceedance, EPA has concluded that the PM–10 sampler malfunctioned on August 1, 1987 and operated for a period exceeding 24 hours. Section 1.0 of part 50, appendix K, specifies that a "daily value" is a "24-hour average concentration of PM–10 calculated or measured from midnight to midnight * * *." The EPA has invalidated the exceedance since EPA believes the sampler ran for longer than 24 hours and was not measured from midnight to midnight. By today's notice EPA removes Audrain from the list of initial PM–10 nonattainment areas because EPA believes Audrain County has not measured a "violation" of the PM–10 NAAQS within the meaning of part 50, appendix K.

j. Columbia Falls, Montana (Flathead County). The Governor of Montana requested that EPA expand, by adding one section, the Columbia Falls nonattainment area. In light of the Governor's comments and consistent with the definition of nonattainment area set forth in section 107(d)(1)(A)(i) of the Act, EPA has adjusted the boundaries set forth in the March 1991 notice.

k. Lubbock, Texas. The TACB as well as the City of Lubbock submitted comments on the March 15, 1991 Federal Register notice providing an analysis of the Lubbock PM–10 air quality data collected over a 4-year period from 1988–1989. The TACB commented that they had performed an analysis of all PM–10 filters showing an exceedance of the NAAQS. These analyses included an interpretation and evaluation of soil samples and particulate matter collected on the filters. The results of the analysis of the filter and soil samples indicated that there was a distinct difference between the particulate matter deposited on the filters from routine monitoring days and those from the days of high gusty winds and blowing dust. The three exceedances of the PM–10 24-hour standard at the Lubbock monitoring sites since 1986 were determined by the TACB to be influenced by wind-blown dust transported from out of State sources. As a result, the TACB and the City of Lubbock contend that the days on which exceedances were measured were days with unusually high wind gusts and, as such, these days should be considered as exceptional events and excluded from the records in accordance with EPA's exceptional events policy under 40 CFR part 50, appendix K, § 2.4. They also contend that if the days with the high winds were excluded as exceptional events, the highest 24-hour concentration recorded at the Lubbock monitoring sites would be 126 $\mu g/m^3$, which is below the national standard of 150 $\mu g/m^3$.

The EPA has reviewed all data submitted by the TACB and the City of Lubbock in making its decision on the attainment status of the Lubbock area. Section 2.4 of part 50, appendix K, indicates that certain exceedances of the PM–10 NAAQS can be adjusted to take exceptional events and trends into account. The data available indicate that Lubbock has monitored a limited number of PM–10 levels in excess of the 24-hour PM–10 standard. Further, the influence of long-range transport of wind-blown dust on these measured exceedances makes it difficult to determine the associated frequency and nature of these exceedances. This results in uncertainty in how to treat these exceedance events. Because of this uncertainty, EPA feels that an unclassified status is appropriate for Lubbock while additional information is collected.

III. Table Describing the Initial Moderate PM–10 Nonattainment Areas Corrected by Today's Notice

Based on the foregoing discussion, EPA today is changing its March 15, 1991 (56 FR 11101) announcement of the initial PM–10 nonattainment areas. The nonattainment designations for those areas corrected by today's notice are set forth in the following table. Consistent with EPA's announcement in the March 1991 notice, all of these areas were classified as "moderate" PM–10 nonattainment areas by operation of law, pursuant to section 188(a) of the Act.

TABLE I.—PM–10 INITIAL NONATTAINMENT AREAS[14,15,16,17]

State and counties	Area of concern
[redacted]	
Bannock and Power	The City of Pocatello: Sections 13–36 of range 33 east and township 5 south; Sections 15–23 and 25–36 of range 34 east and township 5 south; Section 31 of range 35 east and township 6 south; Sections 1–36 of range 33 east and township 6 south; Sections 1–36 of range 34 east and township 6 south; Sections 5–36 of range 35 east and township 6 south; Sections 7, 8, 15–22, and 27–35 of range 36 east and township 6 south; Sections 4–6 of range 33 east and township 7 south; Sections 1–4, 10–14, and 24 of range 34 east and township 7 south; Sections 1–30, and 32–36 of range 35 east and township 7 south; Sections 2–11, 14–23, and 26–35 of range 36 east and township 7 south; Sections 1–4 of range 35 east and township 8 south; Sections 3–6 of range 36 east and township 8 south.
Bonner County	The Sandpoint area: Sections 1–3, 9–12, 15, 16, 21, 22, 27, 28 of range 2 west and township 57 north; and the western ¾ of Sections 14, 23, and 26 of the same township and range coordinates.
Illinois:	
Cook	a. Lyons Township. b. The area bounded on the north by 79th Street, on the west by Interstate 57 between Sibley Boulevard and Interstate 94 and by Interstate 94 between Interstate 57 and 79th Street, on the south by Sibley Boulevard, and on the east by the Illinois/Indiana State line.
LaSalle	Oglesby including the following Townships, ranges, and sections: T32N, R1E, S1; T32N, R2E, S6; T33N, R1E, S24; T33N, R1E, S25; T33N, R2E, S31; T33N, R1E, S36; and T33N, R2E, S30.
Indiana:	
Vermillion	Part of Clinton Township including the following sections: Sections 15, 16, 21, 22, 27, 28, 33 and 34.
Minnesota:	
Olmsted	The area bounded on the south by U.S. Highway 14; on the west by U.S. Highway 52; on the north by 14th Street NW. between U.S. Highway 52 and U.S. Route 63 (Broadway Avenue), U.S. Route 63 north to Northern Heights Drive, NE., and Northern Heights Drive NE. extended east to the 1990 City of Rochester limits; and on the east by the 1990 City of Rochester limits.
Montana:	
Flathead	The area bounded by lines from Universal Transmercator (UTM) coordinate 700000mE, 534700mN, east to 704000mE, 5347000mN, south to 704000mE, 5341000mN, west to 703000mE, 5341000mN, south to 703000mE, 5340000mN, west to 702000mE, 5340000mN, south to 702000mE, 5339000mN, east to 703000mE, 5339000mN, south to 703000mE, 5338000mN, east to 704000mE, 5338000mN, south to 704000mE, 5336000mN, west to 702000mE, 5336000mN, south to 702000mE, 5335000mN, west to 700000mE, 5335000mN, north to 700000mE, 5340000mN, west to 695000mE, 5340000mN, north to 695000mE, 5345000mN, east to 700000mE, 5345000mN, north to 700000mE, 5347000mN. Columbia Falls and vicinity: Township T30N, R20W—Sections 7, 8, 9, 16, 17, and 18.
Lincoln	Libby and vicinity: T30N, R31W—Sections 2, 3, 4, 5, 9, 10, 11, 14; 15, 23, 26, 35, and west ½ of Section 24, west ½ of Section 25, and west ½ of Section 36; plus T31N, R31W—Sections 26, 27, 29, the east ½ of Sections 30, 32, 33, 34, and 35.
Missoula	Missoula and vicinity including the following sections: T13N, R19W—Sections 2, 8, 11, 14, 15, 16, 17, 19, 20, 21, 22, 23, 24, 27, 28, 29, 30, 31, 32, 33, and 34; T12N, R19W—Sections 4, 5, 6, 7; T13N, R20W—Sections 23, 24, 25, 26, 35, and 36.
Silver Bow	Butte: The Northwest corner of section 2, T.3N., R.8W., thence Easterly to Northeast corner Section 5, T.3N, R.7W.; thence Southerly to Northwest corner Section 9, T.3N., R.7W; thence Easterly to Northeast corner Section 10, T.3N, R.7W.; thence Southerly to Southeast corner Section 22, T.2N., R.7W.; thence Westerly to Southwest corner Section 19, T.2N., R.7W.; thence Northerly to Northwest corner Section 19, T.2N., R.7W.; thence Westerly to Southwest corner Section 14, T.2N., R.8W.; thence Northerly to Southwest corner Section 35, T.3N., R.8W.; thence Westerly to Southwest corner Section 34, T.3N., R.8W.; thence Northerly to Northwest corner Section 27, T.3N., R.8W.; thence Westerly to Southwest corner Section 20, T.3N., R.8W.; thence Northerly to Northwest corner Section 17, T.3N., R.8W.; thence Easterly to Northwest corner Section 14, T.3N., R.8W.; thence northerly to the point of beginning.
[redacted]	
Ohio:	
Jefferson	The area bounded by Market Street (State Route 43) from the West Virginia/Ohio border west to Sunset Blvd. (U.S. Route 22). Sunset Blvd. west to the Steubenville Township/Cross Creek Township boundary, the township boundary south to the Steubenville Corporation limit, the corporation boundary east to State Route 7, State Route 7 South to the Steubenville Township/Wells Township boundary, the township boundary east to the West Virginia/Ohio border, and North on the border to Market Street.
Washington:	
Yakima	The area bounded on the south by a line from UTM coordinate 694000mW, 5157000mN, west to 681000mW, 5157000mN, thence north along a line to coordinate 681000mN, 5172000mN, thence east to 694000mW, 5172000mN, thence south to the beginning coordinate 694000mW, 5157000mN.

[14] When cities or towns are shown, the area of concern is defined by the municipal boundary limits as of November 15, 1990 (the date of enactment of the Act) except for areas which were formerly Group I, in which case the area of concern is defined by the municipal boundary limits as of October 31, 1990 (See 55 FR 45799). (This footnote is applicable to today's action and also corrects the first footnote to the table listed in the March 15, 1991 FEDERAL REGISTER notice (56 FR 11105).)

[15] When a planning area is shown, the area of concern includes the entire planning area as of November 15, 1990 (the date of enactment of the Act) except for areas which were formerly Group I, in which case the area of concern is defined by the entire planning area as of October 31, 1990 (see 55 FR 45799). This is true except to the extent the planning area is further defined (e.g., by township, range, and/or section). Such geographical descriptors remain a part of the nonattainment boundaries irrespective of whether they are included in the planning area. (This footnote is applicable to today's action and also corrects the second footnote to the table listed in the March 15, 1991 FEDERAL REGISTER notice (56 FR 11105).)

[16] Audrain County, Missouri, was removed as an initial PM–10 nonattainment area. See comments above.

[17] Lubbock, Texas, was removed as an initial PM–10 nonattainment area. See comments above.

IV. Significance of Today's Action

By November 15, 1991, States must adopt and submit to EPA a SIP revision for all those areas that were classified as moderate PM–10 nonattainment areas by operation of law upon enactment of the Act (see subpart 4 of part D of title I of the Act as amended). In particular, section 189(a) of the Act requires that all [redacted] initial moderate PM–10 nonattainment areas submit a SIP by November 15, 1991 which includes the following: (1) Either a demonstration (including air quality modeling) that the plan will provide for attainment by December 31, 1994 or a demonstration that attainment by that date is impracticable; and (2) provisions to assure that reasonably available control measures (including reasonably available control technology) for the control of PM–10 are implemented by December 10, 1993. In addition, a new source permit program meeting the requirements of part D of the Act is required for the construction and operation of new and modified major stationary sources of PM–10 (including, in some cases, PM–10 precursors). A SIP revision meeting this requirement is due by June 30, 1992 for all of the initial moderate PM–10 nonattainment areas. The EPA will provide additional

guidance on SIP requirements for these areas in the near future. Also note that EPA will be reclassifying some of these initial PM–10 nonattainment areas from moderate to serious because they cannot practicably attain the PM–10 air quality standards by December 31, 1994 (see section 188(b)(1) of the Act). If reclassified as serious, these areas will be subject to additional control requirements and a new attainment date. The EPA will work with the States in order to develop a proposed list of moderate areas to be reclassified as serious.

V. Effective Date of This Notice

As mentioned, the effective date of the announcement of the designation and classification of areas adjusted or corrected in today's notice is August 8, 1991. While 5 U.S.C. 553(d) (the APA) states that the effective date of certain administrative actions must be 30 days after publication, EPA does not believe that provision of the APA is applicable to this action. Section 107(d)(2) of the Act expressly states that "promulgation or announcement" of a designation under section 107(d)(4) shall not be subject to 5 U.S.C. 553–557. The provision establishing the PM–10 designations that occurred by operation of law upon enactment of the Act (the designation of the "initial PM–10 nonattainment areas") appears at section 107(d)(4)(B). Thus, announcement of the initial PM–10 nonattainment areas is exempt from the notice-and-comment rulemaking procedures set forth in 5 U.S.C. 553–557, including the § 553(d) requirement that the effective date of certain actions must be 30 days after publication.[18]

VI. Finality

The EPA will take final action on the initial designations for PM–10 (under section 107(d)(4)(B) of the Clean Air Act) for the purposes of section 307(b) of the Act when EPA formally codifies these designations in 40 CFR part 81. This includes those designations announced in the March 15, 1991 notice and any subsequent modifications made in this notice. As noted, EPA is expected to complete a part 81 codification for PM–10 and other title I air pollutants in the near future.

VII. Authority

Sections 107(d)(2), 107(d)(4), 110 (including 110(k)(6)), 188(a), and 301 of the Act provide authority for today's action.

Dated: July 31, 1991.

Michael Shapiro,

Assistant Administrator for Air and Radiation.

[FR Doc. 91–18827 Filed 8–7–91; 8:45 am]

BILLING CODE 6560–50–M

[18] If the APA requirement that publication precede the effective date of certain actions by 30 days was deemed applicable to today's action, EPA believes this action would be within the purview of the good cause exception to this requirement. See 5 U.S.C. 553(d)(3). The March 15, 1991 Federal Register notice announcing the initial PM–10 nonattainment areas was effective 60 days after publication (i.e., May 14, 1991) in order to allow for a 30-day comment period and any appropriate follow-up adjustments by EPA. In this Federal Register notice, EPA responds to comments addressing the March 1991 notice. Thus, there is no reason to defer the effective date further.

FEDERAL COMMUNICATIONS COMMISSION

47 CFR Part 1

[FCC 91–217]

Standards for Assessing Forfeitures

AGENCY: Federal Communications Commission.

ACTION: Policy statement.

SUMMARY: This policy statement establishes standards to be used by the Commission in assessing forfeitures. Adoption of the Policy Statement will assist the Commission in ensuring that similarly situated violators are treated in a similar manner and will provide guidance to the public regarding the forfeitures that can be expected in connection with specific violations.

EFFECTIVE DATE: August 8, 1991.

FOR FURTHER INFORMATION CONTACT: David H. Solomon, Office of General Counsel, Federal Communications Commission (202) 632–6990.

SUPPLEMENTARY INFORMATION:

Policy Statement

Adopted: July 11, 1991; Released: August 1, 1991.

By the Commission:

I. Introduction

1. In this Policy Statement, we establish standards for assessing forfeitures. These standards are set forth in the appendix. We intend to be guided in the future by these standards, although we note that we remain "free to exercise * * * discretion in situations that arise" in specific case. See *Guardian Federal Savings & Loan Ass'n* v. *Federal Savings and Loan Insurance Co.*, 589 F. 2d 658, 666 (DC Cir. 1978).

II. Background

2. The Commission has traditionally assessed forfeitures on a case-by-case basis, in light of relevant precedent. In 1989, Congress substantially increased the dollar amounts of our forfeiture authority. Public Law No. 100–239, 103 Stat. 2131. As the Commission implements this increased forfeiture authority, we believe it is appropriate to depart from our traditional case-by-case approach and adopt more specific standards for assessing forfeitures. Such standards will assist the Commission in ensuring that similarly situated violators are treated in a comparable manner, and will provide guidance to the public regarding the forfeitures that can be expected in connection with specific violations. (The Commission remains free, of course, to respond to violations with other or additional action, for example, admonishment, revocation or non-renewal.) Establishing forfeiture standards is consistent with a recommendation of the Administrative Conference of the United States (ACUS), and is similar to approaches taken by some other independent regulatory agencies. See Agency Assessment and Mitigation of Civil Money Penalties, Recommendation No. 79–3, 1 CFR 305.79–3; General Statement of Policy and Procedure for NRC Enforcement Actions, 10 CFR chapter 1, part 2, appendix C.

III. Discussion

3. *Section 503 Forfeitures.* Most Commission forfeitures are issued under the Commission's general forfeiture authority contained in section 503 of the Act. Under section 503(b)(2), for each violation or each day of a continuing violation, the Commission may now assess forfeitures of up to $25,000 against broadcasters, cable operators or applicants for such facilities, $100,000 against common carriers or applicants for such facilities, and $10,000 against others. In addition, there is a limit on forfeitures for continuing violations involving a single act or failure to act of $250,000 for broadcasters, cable operators or applicants for such facilities and $1,000,000 for common carriers or applicants for such facilities. A limit of $75,000 applies to continuing violations involving a single act or failure to act by others.

4. Our new standards for section 503 forfeitures establish base forfeiture amounts for specific classes of section 503 forfeitures. The base forfeiture amounts are based on a ranking of a relative gravity of the violation involved. The base amounts are computed as a percentage of the statutory maximum for the service involved. For example, failure to comply with prescribed tower lighting and

petroleum and coal and is responsible for its worldwide supply, storage, and distribution.

d. Defense Industrial Supply Center (DISC). Buys and manages industrial items such as bearings, ferrous and nonferrous metals, electrical wire, gasket material, and certain mineral ores and precious metals.

e. Defense Personnel Support Center (DPSC). Buys and manages food, clothing, and medical supplies for all the armed services, some Federal agencies and authorized foreign governments.

f. Defense General Supply Center (DGSC). Buys and manages such categories of materials as electrical hardware, materials handling equipment, kitchen and laundry equipment, woodworking and metalworking machines, photographic supplies, and precision measuring instruments.

2. *Depots.* DLA depots are responsible for the receipt, storage, and distribution of DLA-managed materiel. The principal depots are:
Defense Distribution Region West (DDRW)
Defense Distribution Region East (DDRE)
Defense Depot Memphis (DDMT)
Defense Depot Ogden (DDOU)

3. *Service centers.* DLA operates six service centers which provide technical and logistics services. The service centers are:

a. Defense Logistics Services Center (DLSC). Responsible for maintenance of the Federal Supply Catalog System, including the development and dissemination of cataloging and item intelligence data to the Military Departments and other authorized customers.

b. Defense Reutilization and Marketing Service (DRMS). The central clearinghouse for the reutilization, donation, sale, or disposal of DoD-owned excess property, including scrap and waste.

c. Defense Industrial Plant Equipment Center (DIPEC). Manages the reserve of DoD-owned industrial plant equipment. The center repairs, rebuilds, and updates equipment to avoid new procurement costs.

d. DLA Administrative Support Center (DASC). Provides general administrative support to designated DLA activities.

e. Defense National Stockpile Center (DNSC). Maintains the national reserve of strategic materials stored for use in event of war or other national emergency.

f. DLA Systems Automation Center (DSAC). Develops and maintains DLA's automated and computerized systems.

4. *Contract districts.* Six districts, each responsible for contracts covering a multistate or specialized area, administer materiel contracts after they are awarded by the military services, defense agencies, some civil agencies, and certain foreign governments. The districts are:

Defense Contract Management District Northeast (DCMDN).
Defense Contract Management District Mid Atlantic (DCMDM).
Defense Contract Management District North Central (DCMDC).
Defense Contract Management District South (DCMDS).
Defense Contract Management District West (DCMDW).
Defense Contract Management Command International (DCMCI).

III. Requester Requirements

A. Addressing Requests

Address requests to the DLA PLFA most likely to hold the records (see paragraph V of this appendix for mailing addresses of FOIA managers). If the PLFA is undeterminable, address requests to HQ DLA-XAM for proper routing. Requests must be in writing.

B. Description of Records.

Provide a reasonable description of the documents you are seeking. If you have detailed information which would help reduce the search time involved, please include it in your request. If you have a document which references the DLA record you seek, include a copy of that document.

C. Fees and fee waivers.

State your willingness to pay fees above the $15 automatic waiver or provide a justification for waiver of all or part of the costs. Waiver requests must address with specificity each of the fee waiver elements in part 286, subpart F, of this title.

IV. Availability of DLA Publications

Unrestricted DLA regulations, manuals, and handbooks may be purchased from the DLA publications sales outlet. DLA Handbook 5025.1, Defense Logistics Agency Index of Publications, is published quarterly and may be used to help you identify publications of interest to you. Orders for this and other nonrestricted publications may be placed through DASC-PD, Cameron Station, Alexandria, VA 22304-6130. That office will advise you of cost before completing your order.

V. FOIA Mailing Addresses

HQ Defense Logistics Agency, Attn: HQ DLA-XAM, Cameron Station, Alexandria, VA 22304-6100.
Defense Construction Supply Center, Attn: DCSC-WXA, 3990 E. Broad Street, Columbus, OH 43216-5000.
Defense Electronics Supply Center, Attn: DESC-WXA, 1507 Wilmington Pike, Dayton, OH 45444-5252.
Defense Fuel Supply Center, Attn: DFSC-DB, Cameron Station, Alexandria, VA 22304-6180.
Defense General Supply Center, Attn: DGSC-DB, Richmond, VA 23297-5000.
Defense Industrial Supply Center, Attn: DISC-PPR, 700 Robbins Avenue, Philadelphia, PA 19111-5096.
Defense Personnel Support Center, Attn: DPSC-WXA, 2800 South 20th Street, Philadelphia, PA 19101-8419.
Defense Distribution Region East, Attn: DDRE-WX, New Cumberland, PA 17070-5001.
Defense Depot Memphis, Attn: DDMT-WX, 2163 Airways Blvd., Memphis, TN 38114-5000.
Defense Depot Ogden, Attn: DDOU-G, 800 West 12th Street, Ogden, UT 84407-5000.
Defense Distribution Region West, Attn: DDRW-WX, Tracy, California 95376-5000.
Defense National Stockpile Center Attn: DNSC-L, 1745 Jefferson Davis Highway, Crystal Square No. 4, suite 100, Arlington, VA 22202-3402.
Defense Industrial Plant Equipment Center, Attn: DIPEC-LP, 2163 Airways Blvd., Memphis, TN 38114-6051.
Defense Logistics Services Center, Attn: DLSC-WXA, 74 N. Washington Avenue, Battle Creek, MI 49017-3084.
Defense Reutilization and Marketing Service, c/o Defense Logistics Services Center, Attn: CLSC-WXA, 74 N. Washington Avenue, Battle Creek, MI 49017-3084.
DLA Systems Automation Center, Attn: DSAC-E, P.O. Box 1605, Columbus, OH 43216-5002.
DLA Administrative Support Center, Attn: DASC-RA, Cameron Station, Alexandria, VA 22304-6130.
Defense Contract Management District South, Attn: DCMDS-W, 805 Walker Street, Marietta, Georgia 30060-2789.
Defense Contract Management District Northeast, Attn: DCMDN-WX, 495 Summer Street, Boston, MA 02210-2184.
Defense Contract Management District North Central, Attn: DCMDC-WX, O'Hare International Airport, P.O. Box 66926, Chicago, IL 60666-0926.
Defense Contract Management District West, Attn: DCMDW-WXA, 222 N. Sepulveda Blvd., El Segundo, CA 90245-4320.
Defense Contract Management District Mid Atlantic, Attn: DCMDM-RW, 2800 S. 20th Street, Philadelphia, PA 19101-7478.
Defense Contract Management Command International, Attn: DCMCI-MBW, Wright-Patterson AFB, OH 45433-5000.

[FR Doc. 91-29988 Filed 12-16-91; 8:45 am]
BILLING CODE 3620-01-M

ENVIRONMENTAL PROTECTION AGENCY

40 CFR Part 51

[AD-FRL-3977-4]

Preparation, Adoption, and Submittal of State Implementation Plans, Method for Measurement of Condensible Particulate Emissions From Stationary Sources

AGENCY: Environmental Protection Agency (EPA).

ACTION: Final rule.

SUMMARY: Method 202 for the measurement of condensible particulate matter (CPM) was proposed in the Federal Register on October 12, 1990, at (55 FR 41546). This action promulgates this method. On April 17, 1990 at (55 FR 14246) EPA promulgated two methods for measuring particulate matter (PM) with an aerodynamic diameter of 10 μm or less (PM_{10}). Since CPM emissions form very fine particles in the $PM_{2.5}$ size range and are considered PM_{10} emissions, the Agency is adding a method for measuring CPM emissions from stationary sources to appendix M in 40 CFR part 51. The purpose of this

rule is to provide the States with a method for measuring CPM.

EFFECTIVE DATE: December 17, 1991.

ADDRESSES: Background Information Document. The Background Information Document for the promulgated test methods may be obtained from Candace Sorrell or Peter Westlin, MD–19, U.S. EPA, Research Triangle Park, North Carolina 27711, telephone number (919) 541–1064. Please refer to "Summary of Comments and Responses for Method 202."

Docket. Docket No. A–90–03, containing materials relevant to this rulemaking, is available for public inspection and copying between 8:30 a.m. to 12 Noon and 1:30 to 3:30 p.m., Monday through Friday, at EPA's Air Docket Section, Waterside Mall, room M1500, 1st Floor, Gallery 1, 401 M Street SW., Washington, DC 20460. A reasonable fee may be charged for copying.

FOR FURTHER INFORMATION CONTACT: Candace Sorrell or Peter Westlin, Emission Measurement Branch (MD–19), Technical Support Division, U.S. Environmental Protection Agency, Research Triangle Park, North Carolina 27711, telephone number (919) 541–1064.

SUPPLEMENTARY INFORMATION:

I. The Rulemaking

The EPA is proposing to add a method for measuring CPM emissions to appendix M in 40 CFR part 51 to provide a method that States can use in their State implementation plans.

II. Public Participation

The opportunity to hold a public hearing on November 2, 1990 at 10 a.m. was presented in the proposal notice, but no one desired to make an oral presentation. The public comment period was from October 12, 1990 to December 17, 1990.

III. Significant Comments and Changes to the Proposed Rulemaking

Six comment letters were received from the proposal rulemaking. A detailed discussion of these comments is contained in the background document entitled "Summary of Comments and Responses for Method 202" which is referred to in the ADDRESSES section of this preamble. The major comments raised in these letters and the Agency's responses follow.

One commenter suggests that EPA determine the chemical composition of the material collected in the sampling train to verify that it will form ambient condensibles.

The EPA believes that material will collect in the impingers only by condensation or dissolution. Dissolved gases will evaporate during analysis and will not be measured unless the gases react to form a solid or liquid while they are in solution. The EPA has designed Method 202 to prevent the formation of reaction materials from dissolved gases. The EPA believes that any remaining material collected and measured by Method 202 represents the material that would condense in the ambient air. Additional analysis of chemical composition is not necessary.

Another comment raises the concern that the method may collect some portion of the sulfur dioxide (SO_2) as condensible.

The dissolution of SO_2 in water does not lead immediately to the formation of sulfuric acid (H_2SO_4), but tends to lower the solution pH, which further inhibits sulfate or H_2SO_4 formation. The method includes a purging procedure which effectively removes SO_2 before significant oxidation occurs. No additional revisions are necessary.

The commenter feels that if EPA is allowing Method 202 to be used in conjunction with Method 201 or 201A or another dry catch procedure to determine the total PM_{10} measurement, the combined methods should be tested for precision.

The imprecision associated with combining Method 202 with Method 201 or 201A or any other dry catch procedure is not additive because each train provides a separate measurement. Since the total precision associated with the combined methods cannot be larger than the least precise sampling method, a precision evaluation of a combined sampling system is unnecessary.

A commenter suggests that EPA add specific language to the applicability section of the method stating that Method 202 cannot be used on wet sources. He notes that Method 17 is excluded from use on wet sources, and Methods 201 and 201A are not recommended for wet sources.

The EPA agrees that Method 202 with an in-stack filter is not recommended for wet sources, and such a statement has been added to the applicability. However, a heated Method 5 filter could be used in Method 202 instead of the in-stack filter which would allow application to wet sources.

One commenter requests that EPA clearly state that Method 202 should not be used for assessing compliance with emission limits set on the basis of data derived from a different measurement approach.

The EPA agrees that a violation must be shown, in the first instance, by means of measurements made with the applicable test method. Once such a showing is made, however, section 113(e) of the Clean Air Act allows the Agency to rely on any credible evidence, including evidence other than the applicable test method, to establish the duration of the period of noncompliance for the purposes of assessing a penalty.

A commenter believes that the sample collection efficiency and method precision may be affected by the sampling conditions such as impinger temperature and sampling flow rate and the method should address this possibility.

The EPA agrees that the nature of the material in the sample gas may affect collection efficiency. For example, a field demonstration of Method 202 at an oil-fired boiler resulted in about 75 percent impinger collection efficiency. This collection efficiency can be improved with the addition of a second filter place between the second and third impinger. This option has been included in the method with a discussion of applicability.

The commenter feels the 1-hour nitrogen (N_2) purge is too long. He believes the majority of the SO_2 is removed in the first few minutes. He suggests the method be revised to reduce the purge time in conjunction with maintaining the sample under cold conditions and analyzing it within 48 hours.

The EPA does not agree with reducing the purge time. Laboratory tests have shown that a 1-hour purge time is necessary to ensure the adequate removal of SO_2 from the impinger solution.

Another commenter suggests that the method should be revised to give credit for ammonium sulfate ($(NH_4)_2SO_4$) dihydrte and other condensible particulate matter formed in the gas stream due to ammonia (NH_3) injection used to enhance the efficiency of a control device.

The EPA does not agree. The condensible particulate matter formed in the gas stream due to NH_3 injection is emitted to the atmosphere. The EPA believes that condensible particulate matter emitted from the source should be counted as such even if it is a product of a pollution-control technique.

The commenter suggests that EPA consider an alternative to $MeCl_2$ consistent with the Montreal Protocol.

The EPA investigated the effectiveness of a chloroform-ether extraction during the method development phase. The chloroform-ether was not as effective as the $MeCl_2$ in removing organic materials; however, the chloroform-ether procedure was

found to be acceptable for organic extraction. The method has been revised to allow a chloroform-ether extraction.

The commenter supports the exclusion of ammonium chloride as a condensible; however, he expresses concern about $(NH_4)_2SO_4$ forming in the impingers.

The N_2 purge removes SO_2 before significant oxidation occurs. If NH_3 is present in the flue gas, the $(NH_4)_2SO_4$ formed in the impingers would not be counted as a condensible, although the H_2SO_4, which reacted with NH_3, would be counted as a condensible. Method 202 corrects for the NH_3 by measuring the sulfate using an IC analysis and subtracting out the ammonium ion (NH_4^+) mass.

The commenter agrees that the NH_3 added during the titration should be subtracted from the final weight. However, he does not agree with adding back in the water removed by the acid-base reaction.

Because H_2SO_4 is hygroscopic, the H_2SO_4 mass found in the atmosphere would have the water attached to it. The method has been revised to allow the source to correct for only the NH_4^+ or for both NH_4^+ and water as an option depending on the basis for the regulation.

A. Docket

The docket is an organized and complete file of all the information submitted to or otherwise considered by EPA in the development of this proposed rulemaking. The principle purposes of the docket are to: (1) Allow interested parties to identify and locate documents so that they can effectively participate in the rulemaking process, and (2) serve as the record in case of judicial review except for interagency review materials (Section 307(d)(7)(A)).

B. Office of Management and Budget Review

Under Executive Order 12291, EPA must judge whether a regulation is "major" and, therefore, subject to the requirement of a regulatory impact analysis. This rulemaking would not result in any of the adverse economic effects set forth in Section 1 of the Order as grounds for finding a "major rule." It will neither have an annual effect on the economy of $100 million or more, nor will it result in a major increase in costs or prices. There will be no significant adverse effects on competition, employment, investment, productivity, innovation, or on the ability of U.S.-based enterprises to compete with foreign-based enterprises in domestic or export markets. This rulemaking was submitted to the Office of Management and Budget (OMB) for review as required by Executive Order 12291.

C. Regulatory Flexibility Act Compliance

Pursuant to the provisions of 5 U.S.C. 605(b), I hereby certify that this attached rule, if promulgated, will not have any economic impact on small entities because no additional costs will be incurred.

This rule does not contain any information collection requirements subject to OMB review under the Paperwork Reduction Act of 1980, 44 U.S.C. 3501 *et seq.*

Dated: December 6, 1991.

F. Henry Habicht II,

Acting Administrator.

List of Subjects in 40 CFR Part 51

Administrative practice and procedure,
Air pollution control,
Carbon Monoxide,
Inter-governmental relations,
Lead,
Nitrogen dioxide,
Ozone,
Particulate matter,
Reporting and recordkeeping requirements,
Sulfur Oxides,
Volatile Organic Compounds.

The EPA amends title 40, chapter I, part 51 of the Code of Federal Regulations as follows:

PART 51—[AMENDED]

1. The authority citation for part 51 continues to read as follows:

Authority: Section 110 of the Clean Air Act as amended (42 U.S.C. 7410).

2. Appendix M, to part 51 Table of Contents is amended by adding an entry to read as follows:

Method 202—Determination of Condensible Particulate Emissions From Stationary Sources

3. By adding Method 202 to Appendix M to part 51 to read as follows:

Method 202—Determination of Condensible Particulate Emissions From Stationary Sources

1. Applicability and Principle

1.1 Applicability. 1.1.1 This method applies to the determination of condensible particulate matter (CPM) emissions from stationary sources. It is intended to represent condensible matter as material that condenses after passing through a filter and as measured by this method (Note: The filter catch can be analyzed according to the appropriate method).

1.1.2 This method may be used in conjunction with Method 201 or 201A if the probes are glass-lined. Using Method 202 in conjunction with Method 201 or 201A, only the impinger train configuration and analysis is addressed by this method. The sample train operation and front end recovery and analysis shall be conducted according to Method 201 or 201A.

1.1.3 This method may also be modified to measure material that condenses at other temperatures by specifying the filter and probe temperature. A heated Method 5 out-of-stack filter may be used instead of the in-stack filter to determine condensible emissions at wet sources.

1.2 Principle. 1.2.1 The CPM is collected in the impinger portion of a Method 17 (appendix A, 40 CFR part 60) type sampling train. The impinger contents are immediately purged after the run with nitrogen (N_2) to remove dissolved sulfur dioxide (SO_2) gases from the impinger contents. The impinger solution is then extracted with methylene chloride ($MeCl_2$). The organic and aqueous fractions are then taken to dryness and the residues weighed. The total of both fractions represents the CPM.

1.2.2 The potential for low collection efficiency exist at oil-fired boilers. To improve the collection efficiency at these type of sources, an additional filter placed between the second and third impinger is recommended.

2. Precision and Interference

2.1 Precision. The precision based on method development tests at an oil-fired boiler and a catalytic cracker were 11.7 and 4.8 percent, respectively.

2.2 Interference. Ammonia. In sources that use ammonia injection as a control technique for hydrogen chloride (HCl), the ammonia interferes by reacting with HCl in the gas stream to form ammonium chloride (NH_4Cl) which would be measured as CPM. The sample may be analyzed for chloride and the equivalent amount of NH_4Cl can be subtracted from the CPM weight. However, if NH_4Cl is to be counted as CPM, the inorganic fraction should be taken to near dryness (less than 1 ml liquid) in the oven and then allowed to air dry at ambient temperature to prevent any NH_4Cl from vaporizing.

3. Apparatus

3.1 Sampling Train. Same as in Method 17, section 2.1, with the following exceptions noted below (see Figure 202-1). *Note:* Mention of trade names or specific products does not constitute endorsement by EPA.

3.1.1 The probe extension shall be glass-lined or Teflon.

3.1.2 Both the first and second impingers shall be of the Greenburg-Smith design with the standard tip.

3.1.3 All sampling train glassware shall be cleaned prior to the test with soap and tap water, water, and rinsed using tap water, water, acetone, and finally, $MeCl_2$. It is important to completely remove all silicone grease from areas that will be exposed to the $MeCl_2$ during sample recovery.

3.2 Sample Recovery. Same as in Method 17, section 2.2, with the following additions:

3.2.1 N_2 Purge Line. Inert tubing and fittings capable of delivering 0 to 28 liters/min of N_2 gas to the impinger train from a

standard gas cylinder (see Figure 202-2). Standard 0.95 cm (⅜-inch) plastic tubing and compression fittings in conjunction with an adjustable pressure regulator and needle valve may be used.

3.2.2 Rotameter. Capable of measuring gas flow at 20 liters/min.

3.3 Analysis. The following equipment is necessary in addition to that listed in Method 17, section 2.3:

3.3.1 Separatory Funnel. Glass, 1-liter.

3.3.2 Weighing Tins. 350-ml.

3.3.3 Dry Equipment. Hot plate and oven with temperature control.

3.3.4 Pipets. 5-ml.

3.3.5 Ion Chromatograph. Same as in Method 5F, Section 2.1.8.

4. Reagents

Unless otherwise indicated, all reagents must conform to the specifications established by the Committee on Analytical Reagents of the American Chemical Society. Where such specifications are not available, use the best available grade.

4.1 Sampling. Same as in Method 17, section 3.1, with the addition of deionized distilled water to conform to the American Society for Testing and Materials Specification D 1193-74, Type II and the omittance of section 3.1.4.

4.2 Sample Recovery. Same as in Method 17, section 3.2, with the following additions:

4.2.1 N_2 Gas. Zero N_2 gas at delivery pressures high enough to provide a flow of 20 liters/min for 1 hour through the sampling train.

4.2.2 Methylene Chloride, ACS grade. Blanks shall be run prior to use and only methylene chloride with low blank values (0.001 percent) shall be used.

4.2.3 Water. Same as in section 4.1.

4.3 Analysis. Same as in Method 17, section 3.3, with the following additions:

4.3.1 Methylene Chloride. Same as section 4.2.2.

4.3.2 Ammonium Hydroxide. Concentrated (14.8 M) NH_4OH.

4.3.3 Water. Same as in section 4.1.

4.3.4 Phenolphthalein. The pH indicator solution, 0.05 percent in 50 percent alcohol.

5. Procedure

5.1 Sampling. Same as in Method 17, section 4.1, with the following exceptions:

5.1.1 Place 100 ml of water in the first three impingers.

5.1.2 The use of silicone grease in train assembly is not recommended because it is very soluble in $MeCl_2$ which may result in sample contamination. Teflon tape or similar means may be used to provide leak-free connections between glassware.

5.2 Sample Recovery. Same as in Method 17, section 4.2 with the addition of a post-test N_2 purge and specific changes in handling of individual samples as described below.

5.2.1 *Post-test N_2 Purge for Sources Emitting SO_2.* (Note: This step is recommended, but is optional. With little or no SO_2 is present in the gas stream, i.e., the pH of the impinger solution is greater than 4.5, purging has been found to be unnecessary.) As soon as possible after the post-test leak check, detach the probe and filter from the impinger train. Leave the ice in the impinger box to prevent removal of moisture during the purge. If necessary, add more ice during the purge to maintain the gas temperature below 20 °C. With no flow of gas through the clean purge line and fittings, attach it to the input of the impinger train (see Figure 202-2). To avoid over- or under-pressurizing the impinger array, slowly commence the N_2 gas flow through the line while simultaneously opening the meter box pump valve(s). When using the gas cylinder pressure to push the purge gas through the sample train, adjust the flow rate to 20 liters/min through the rotameter. When pulling the purge gas through the sample train using the meter box vacuum pump, set the orifice pressure differential to $\Delta H_@$ and maintain an overflow rate through the rotameter of less than 2 liters/min. This will guarantee that the N_2 delivery system is operating at greater than ambient pressure and prevents the possibility of passing ambient air (rather than N_2) through the impingers. Continue the purge under these conditions for 1 hour, checking the rotameter and ΔH value(s) periodically. After 1 hour, simultaneously turn off the delivery and pumping systems.

5.2.2 Sample Handling.

5.2.2.1 Container Nos. 1, 2, and 3. If filter catch is to be determined, as detailed in Method 17, section 4.2.

5.2.2.2 *Container No. 4 (Impinger Contents).* Measure the liquid in the first three impingers to within 1 ml using a clean graduated cylinder or by weighing it to within 0.5 g using a balance. Record the volume or weight of liquid present to be used to calculate the moisture content of the effluent gas. Quantitatively transfer this liquid into a clean sample bottle (glass or plastic); rinse each impinger and the connecting glassware, including probe extension, twice with water, recover the rinse water, and add it to the same sample bottle. Mark the liquid level on the bottle.

5.2.2.3 Container No. 5 ($MeCl_2$ Rinse). Follow the water rinses of each impinger and the connecting glassware, including the probe extension with two rinses of $MeCl_2$; save the rinse products in a clean, glass sample jar. Mark the liquid level on the jar.

5.2.2.4 Container No. 6 (Water Blank). Once during each field test, place 500 ml of water in a separate sample container.

5.2.2.5 Container No. 7 ($MeCl_2$ Blank). Once during each field test, place in a separate glass sample jar a volume of $MeCl_2$ approximately equivalent to the volume used to conduct the $MeCl_2$ rinse of the impingers.

5.3 Analysis. Record the data required on a sheet such as the one shown in Figure 202-3. Handle each sample container as follows:

5.3.1 *Container Nos. 1, 2, and 3.* If filter catch is analyzed, as detailed in Method 17, section 4.3.

5.3.2 Container Nos. 4 and 5. Note the level of liquid in the containers and confirm on the analytical data sheet whether leakage occurred during transport. If a noticeable amount of leakage has occurred, either void the sample or use methods, subject to the approval of the Administrator, to correct the final results. Measure the liquid in Container No. 4 either volumetrically to ±1 ml or gravimetrically to ±0.5 g. Remove a 5-ml aliquot and set aside for later ion chromatographic (IC) analysis of sulfates. (Note: Do not use this aliquot to determine chlorides since the HCl will be evaporated during the first drying step; Section 8.2 details a procedure for this analysis.)

5.3.2.1 *Extraction.* Separate the organic fraction of the sample by adding the contents of Container No. 4 ($MeCl_2$) to the contents of Container No. 4 in a 1000-ml separatory funnel. After mixing, allow the aqueous and organic phases to fully separate, and drain off most of the organic/$MeCl_2$ phase. Then add 75 ml of $MeCl_2$ to the funnel, mix well, and drain off the lower organic phase. Repeat with another 75 ml of $MeCl_2$. This extraction should yield about 250 ml of organic extract. Each time, leave a small amount of the organic/$MeCl_2$ phase in the separatory funnel ensuring that no water is collected in the organic phase. Place the organic extract in a tared 350-ml weighing tin.

5.3.2.2 Organic Fraction Weight Determination (Organic Phase from Container Nos. 4 and 5). Evaporate the organic extract at room temperature and pressure in a laboratory hood. Following evaporation, desiccate the organic fraction for 24 hours in a desiccator containing anhydrous calcium sulfate. Weigh to a constant weight and report the results to the nearest 0.1 mg.

5.3.2.3 Inorganic Fraction Weight Determination. (Note: If NH_4Cl is to be counted as CPM, the inorganic fraction should be taken to near dryness (less than 1 ml liquid) in the oven and then allow to air dry at ambient temperature. If multiple acid emissions are suspected, the ammonia titration procedure in section 8.1 may be preferred.) Using a hot plate, or equivalent, evaporate the aqueous phase to approximately 50 ml; then, evaporate to dryness in a 105 °C oven. Redissovle the residue in 100 ml of water. Add five drops of phenolphthalein to this solution; then, add concentrated (14.8 M) NH_4OH until the sample turns pink. Any excess NH_4OH will be evaporated during the drying step. Evaporate the sample to dryness in a 105 °C oven, desiccate the sample for 24 hours, weigh to a constant weight, and record the results to the nearest 0.1 mg. (Note: The addition of NH_4OH is recommended, but is optional when little or no SO_2 is present in the gas stream, i.e., when the pH of the impinger solution is greater than 4.5, the addition of NH_4OH is not necessary.)

5.3.2.4 Analysis of Sulfate by IC to Determine Ammonium Ion (NH_4^+) Retained in the Sample. (Note: If NH_4OH is not added, omit this step.) Determine the amount of sulfate in the aliquot taken from Container No. 4 earlier as described in Method 5F (appendix A, 40 CFR part 60). Based on the IC SO_4^{-2} analysis of the aliquot, calculate the correction factor to subtract the NH_4^+ retained in the sample and to add the combined water removed by the acid-base reaction (see section 7.2).

5.3.3 Analysis of Water and $MeCl_2$ Blanks (Container Nos. 6 and 7). Analyze these sample blanks as described above in sections 5.3.2.3 and 5.3.2.2, respectively.

5.3.4 Analysis of Acetone Blank (Container No. 8). Same as in Method 17, section 4.3.

6. Calibration

Same as in Method 17, section 5, except for the following:

6.1 IC Calibration. Same as Method 5F, section 5.

6.2 Audit Procedure. Concurrently, analyze the audit sample and a set of compliance samples in the same manner to evaluate the technique of the analyst and the standards preparation. The same analyst, analytical reagents, and analytical system shall be used both for compliance samples and the EPA audit sample. If this condition is met, auditing of subsequent compliance analyses for the same enforcement agency within 30 days is not required. An audit sample set may not be used to validate different sets of compliance samples under the jurisdiction of different enforcement agencies, unless prior arrangements are made with both enforcement agencies.

6.3 Audit Samples. Audit Sample Availability. Audit samples will be supplied only to enforcement agencies for compliance tests. The availability of audit samples may be obtained by writing:

Source Test Audit Coordinator (MD–77B), Quality Assurance Division, Atmospheric Research and Exposure Assessment Laboratory, U.S. Environmental Protection Agency, Research Triangle, Park, NC 27711

or by calling the Source Test Audit Coordinator (STAC) at (919) 541–7834. The request for the audit sample must be made at least 30 days prior to the scheduled compliance sample analysis.

6.4 Audit Results. Calculate the audit sample concentration according to the calculation procedure described in the audit instructions included with the audit sample. Fill in the audit sample concentration and the analyst's name on the audit response form included with the audit instructions. Send one copy to the EPA Regional Office or the appropriate enforcement agency and a second copy to the STAC. The EPA Regional Office or the appropriate enforcement agency will report the results of the audit to the laboratory being audited. Include this response with the results of the compliance samples in relevant reports to the EPA Regional Office or the appropriate enforcement agency.

7. Calculations

Same as in Method 17, section 6, with the following additions:

7.1 Nomenclature. Same as in Method 17, section 6.1 with the following additions.

C_{cpm} = Concentration of the CPM in the stack gas, dry basis, corrected to standard conditions, g/dscm (g/dscf).

C_{SO_4} = Concentration of SO_4^{-2} in the sample, mg/ml.

m_b = Sum of the mass of the water and $MeCl_2$ blanks, mg.

m_c = Mass of the NH_4^+ added to sample to form ammonium sulfate, mg.

m_i = Mass of inorganic CPM matter, mg.

m_o = Mass of organic CPM, mg.

m_r = Mass of dried sample from inorganic fraction, mg.

V_a = Volume of aliquot taken for IC analysis, ml.

V_{lc} = Volume of impinger contents sample, ml.

7.2 Correction for NH_4^+ and H_2O. Calculate the correction factor to subtract the NH_4^+ retained in the sample based on the IC SO_4^{-2} and if desired, add the combined water removed by the acid-base reaction.

$$m_c = K\, C_{SO_4}\, V_{lc} \qquad \text{Eq. 202–1}$$

where:

K = 0.0205, when correcting for NH_4^+ and H_2O.

= 0.1840, when only correcting for NH_4^+.

7.3 Mass of Inorganic CPM.

$$m_i = m_r \frac{V_{lc}}{V_{lc} - V_a} - m_c \qquad \text{Eq. 202–2}$$

7.4 Concentration of CPM.

$$C_{cpm} = \frac{m_o + m_i - m_b}{V m_{std}} \qquad \text{Eq. 202–3}$$

8. Alternative Procedures

8.1 Determination of NH_4^+ Retained in Sample by Titration.

8.1.1 An alternative procedure to determine the amount of NH_4^+ added to the inorganic fraction by titration may be used. After dissolving the inorganic residue in 100 ml of water, titrate the solution with 0.1 N NH_4OH to a pH of 7.0, as indicated by a pH meter. The 0.1 N NH_4OH is made as follows: Add 7 ml of concentrated (14.8 M) NH_4OH to 1 liter of water. Standardize against standardized 0.1 N H_2SO_4 and calculate the exact normality using a procedure parallel to that described in section 5.5 of Method 6 (appendix A, 40 CFR part 60). Alternatively, purchase 0.1 N NH_4OH that has been standardized against a National Institute of Standards and Technology reference material.

8.1.2 Calculate the concentration of SO_4^{-2} in the sample using the following equation.

$$CSO_4 = \frac{48.03\, V_t\, N}{100} \qquad \text{Eq. 202–4}$$

where

N = Normality of the NH_4OH, mg/ml.

V_t = Volume of NH_4OH titrant, ml.

48.03 = mg/meq.

100 = Volume of solution, ml.

8.3.1 Calculate the CPM as described in section 7.

8.2 Analysis of Chlorides by IC. At the conclusion of the final weighing as described in section 5.3.2.3, redissolve the inorganic fraction in 100 ml of water. Analyze an aliquot of the redissolved sample for chlorides by IC using techniques similar to those described in Method 5F for sulfates. Previous drying of the sample should have removed all HCl. Therefore, the remaining chlorides measured by IC can be assumed to be NH_4Cl, and this weight can be subtracted from the weight determined for CPM.

8.3 Air Purge to Remove SO_2 from Impinger Contents. As an alternative to the post-test N_2 purge described in section 5.2.1, the tester may opt to conduct the post-test purge with air at 20 liter/min. Note: The use of an air purge is not as effective as a N_2 purge.

8.4 Chloroform-ether Extraction. As an alternative to the methylene chloride extraction described in section 5.3.2.1, the tester may opt to conduct a chloroform-ether extraction. Note: The Chloroform-ether was not as effective as the $MeCl_2$ in removing the organics, but it was found to be an acceptable organic extractant. Chloroform and diethylether of ACS grade, with low blank values (0.001 percent), shall be used. Analysis of the chloroform and diethylether blanks shall be conducted according to Section 5.3.3 for $MeCl_2$.

8.4.1 Add the contents of Container No. 4 to a 1000-ml separatory funnel. Then add 75 ml of chloroform to the funnel, mix well, and drain off the lower organic phase. Repeat two more times with 75 ml of chloroform. Then perform three extractions with 75 ml of diethylether. This extraction should yield approximately 450 ml of organic extraction. Each time, leave a small amount of the organic/$MeCl_2$ phase in the separatory funnel ensuring that no water is collected in the organic phase.

8.4.2 Add the contents of Container No. 5 to the organic extraction. Place approximately 300 ml of the organic extract in a tared 350-ml weighing tin while storing the remaining organic extract in a sample container. As the organic extract evaporates, add the remaining extract to the weighing tin.

8.4.3 Determine the weight of the organic phase as described in Section 5.3.2.2.

8.5 Improving Collection Efficiency. If low impinger collection efficiency is suspected, the following procedure may be used.

8.5.1 Place an out-of-stock filter as described in Method 8 between the second and third impingers.

8.5.2 Recover and analyze the filter according to Method 17, Section 4.2. Include the filter holder as part of the connecting glassware and handle as described in sections 5.2.2.2 and 5.2.2.3.

8.5.3 Calculate the Concentration of CPM as follows:

$$C_{cpm} = \frac{m_o + m_i + m_f - m_b}{V m_{std}} \qquad \text{Eq. 202–5}$$

where:

m_f = amount of CPM collected on out-of-stack filter, mg.

8.6 Wet Source Testing. When testing at a wet source, use a heated out-of-stack filter as described in Method 5.

9. Bibliography

1. DeWees, W.D., S.C. Steinsberger, G.M. Plummer, L.T. Lay, G.D. McAlister, and R.T.

Shigehara. "Laboratory and Field Evaluation of the EPA Method 5 Impinger Catch for Measuring Condensible Matter from Stationary Sources." Paper presented at the 1989 EPA/AWMA International Symposium on Measurement of Toxic and Related Air Pollutants. Raleigh, North Carolina. May 1–5, 1989.

2. DeWees, W.D. and K.C. Steinsberger. "Method Development and Evaluation of Draft Protocol for Measurement of Condensible Particulate Emissions." Draft Report. November 17, 1989.

3. Texas Air Control Board, Laboratory Division. "Determination of Particulate in Stack Gases Containing Sulfuric Acid and/or Sulfur Dioxide." *Laboratory Methods for Determination of Air Pollutants*. Modified December 3, 1976.

4. Nothstein, Greg. Masters Thesis. University of Washington, Department of Environmental Health. Seattle, Washington.

5. "Particulate Source Test Procedures Adopted by Puget Sound Air Pollution Control Agency Board of Directors." Puget Sound Air Pollution Control Agency, Engineering Division. Seattle, Washington. August 11, 1983.

6. Commonwealth of Pennsylvania, Department of Environmental Resources. Chapter 139, Sampling and Testing (Title 25, Rules and Regulations, Part I, Department of Environmental Resources, Subpart C, Protection of Natural Resources, Article III, Air Resources). January 8, 1960.

7. Wisconsin Department of Natural Resources. *Air Management Operations Handbook, Revision 3*. January 11, 1988.

BILLING CODE 6560-50-M

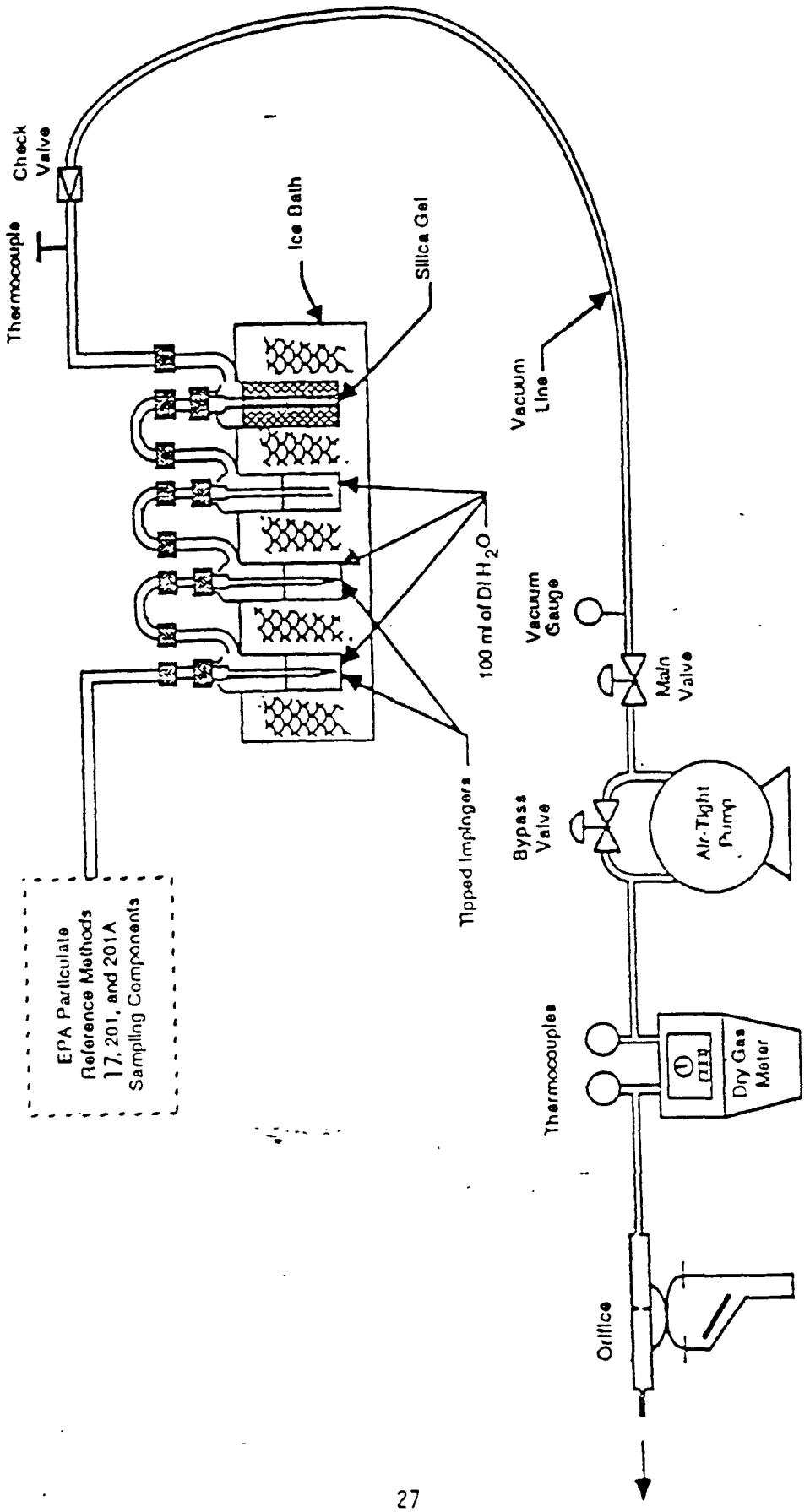

Figure 202-1. Schematic of condensible particulate sampling train.

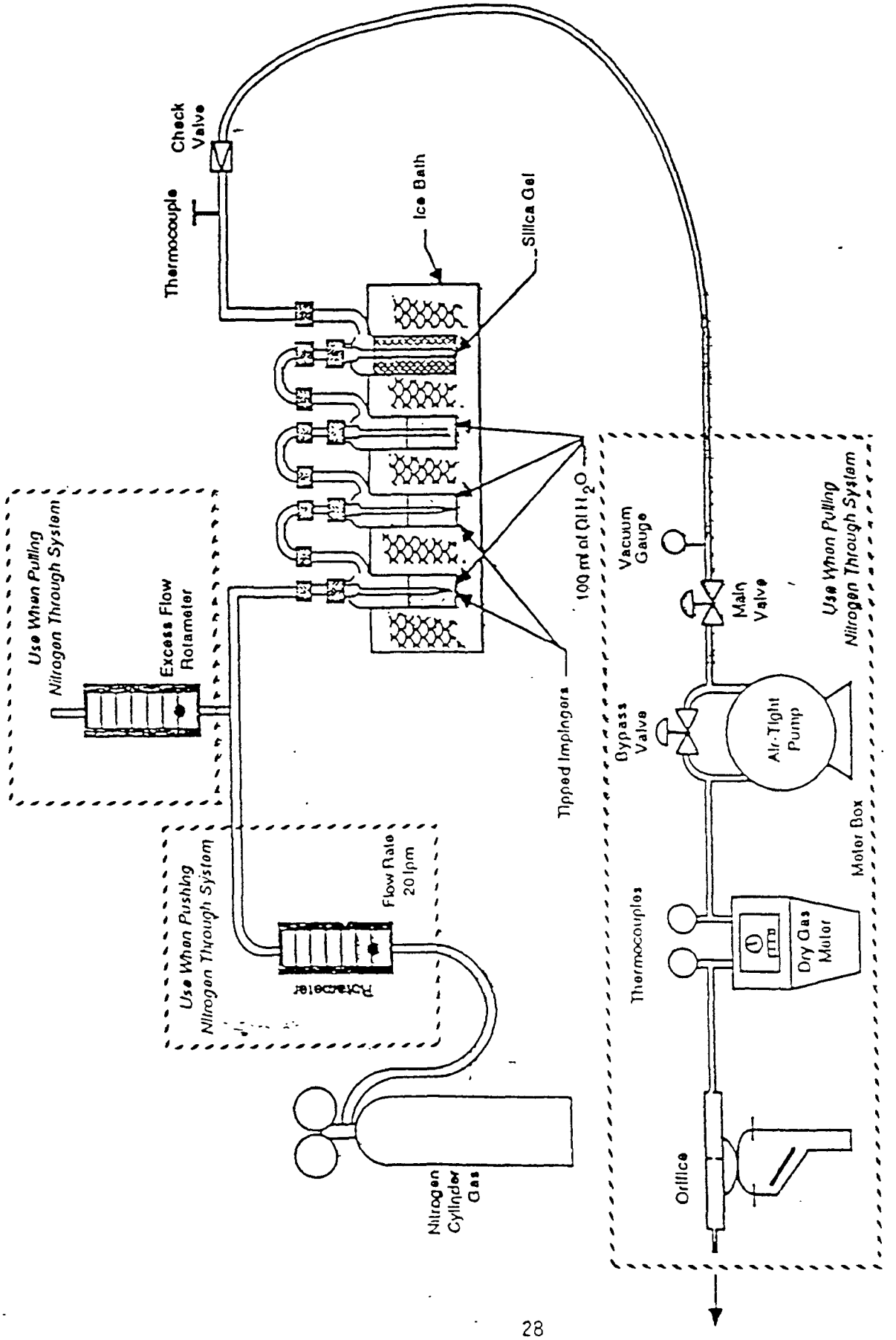

Figure 202-2. Schematic of post-test nitrogen purge system.

BILLING CODE 6560-50-C

Moisture Determination

Volume or weight of liquid in impingers: _____ ml or g

Weight of moisture in silica gel: _____ g

Sample Preparation (Container No. 4)

Amount of liquid lost during transport: _____ ml

Final volume: _____ ml

pH of sample prior to analysis: _____

Addition of NH_4OH required: _____

Sample extracted 2X with 75 ml $MeCl_2$?: _____

For Titration of Sulfate

Normality of NH_2OH: _____ N

Volume of sample titrated: _____ ml

Volume of titrant: _____ ml

Sample Analysis

Container number	Weight of condensible particulate, mg		
	Final weight	Tare weight	Weight gain
4 (Inorganic)			
4 & 5 (Organic)			

Total: _____

Less Blank: _____

Weight of Consensible Particulate: _____

Figure 202-3. Analytical data sheet.

[FR Doc. 91-29657 Filed 12-16-91; 8:45 am]

BILLING CODE 6560-50-M

40 CFR Part 52

[PA-14-1-5353; A-1-FRL-4083-6]

Deficiency for the Allegheny County Portion of the Pennsylvania State Implementation Plan—Banking Provisions

AGENCY: Environmental Protection Agency.

ACTION: Notice of deficiency.

SUMMARY: Allegheny County is located in western Pennsylvania and is one of seven counties which make up the Pittsburgh ozone nonattainment area. The Allegheny County Health Department, Bureau of Air Quality, has promulgated regulations which are substantially the same as the State regulations but which apply solely to the County.

In a May 26, 1988 State Implementation Plan (SIP) call and in a Federal Register notice on September 21, 1989, EPA identified the Pennsylvania regulations for generic bubbles (title 25, § 129.53) and banking (title 25, § 127.67) as deficient. A SIP call is a finding made by EPA pursuant to section 110(a)(2)(H) of the Clean Air Act, 42 U.S.C. 7410(a)(2)(H) in which EPA identifies a SIP to be inadequate to attain and maintain the National Ambient Air Quality Standard (NAAQS). In a June 14, 1988 follow-up letter to the May 26, 1988 SIP call, EPA specifically identified deficiencies in the Allegheny County SIP. In response to this SIP call, Allegheny County was required to submit a workplan to correct all deficiencies in the Allegheny County SIP, including those for the banking regulations (article XX, Section 808). On September 1, 1988, Allegheny County proposed to correct all SIP deficiencies by September 30, 1989. On August 28, 1991, Allegheny County deleted its generic bubble regulation. However, Allegheny County has not corrected or deleted its deficient banking regulations.

On September 28, 1990, EPA sent a letter to Allegheny County to verify that EPA considers section 808 to be deficient and provided formal notification that this regulation must be changed. The corrections to Allegheny County's banking regulation, section 808, are overdue according to Allegheny County's SIP call commitment.

Therefore, this notice reiterates the deficiencies cited in the June 14, 1988 follow-up letter to the May 26, 1988 SIP call to Allegheny County, specifically identifies deficiencies with respect to the Allegheny County banking regulation (article XX, section 808), and explicitly establishes a 60 day schedule for the submittal, to EPA, of an approvable SIP revision to correct deficiencies in the banking regulations or a draft which proposes to delete this regulation from the Allegheny County SIP.

FOR FURTHER INFORMATION CONTACT: Ms. Cynthia H. Stahl, Air, Radiation, and Toxics Division, U.S. Environmental Protection Agency, Region III, (215) 597-9337, FTS 597-9337.

SUPPLEMENTARY INFORMATION: On December 4, 1986, EPA published the final Emissions Trading Policy Statement (ETPS) on the banking and use of emission reduction credits (51 FR 43814). In the ETPS, EPA indicated that it would notify States which had deficient generic rules and require the States to correct those rules according to a schedule established in the notification. The ETPS further stated that if the State did not meet the schedule established in the notification, EPA could issue a SIP call with respect to those generic regulations.

On May 26, 1988, EPA issued State Implementation Plan (SIP) calls for States around the nation. Pennsylvania, including Allegheny County, was one of the States which received a SIP call. Although the ETPS anticipated that a notice would precede a SIP call, in this particular case, EPA has already issued a SIP call to Allegheny County because air quality data indicated that the County continued to exceed the ozone standard for the years 1985-87. EPA stated in that SIP call that all deficient VOC regulations must be corrected within one year. Therefore, no further schedule will be established in this Notice for the correction of deficiencies in the Allegheny County banking regulation.

Emission Offsets (Section 808)

The Allegheny County regulations pertaining to the banking of emission credits are located in article XX, section 808 which also imposes criteria for the calculation of emission offsets. The specific subsections in § 808 which relate to banking are B., C., D., E., and G. The Allegheny County banking regulation, like the Pennsylvania banking regulation, does not meet the December 4, 1986 ETPS because, under the Allegheny County regulation, banked emissions are not required to be surplus, enforceable, permanent, and quantifiable. The banking regulation must meet all the requirements specified in that ETPS including such requirements as specifying how emission credits are to be calculated and specifying all the relevant data needed to perform this calculation. Recordkeeping provisions need to be required and clearly stated and a formal system of recording emission credit/debit transactions must be established. Clear records of ownership, available for public inspection must be kept and updated. Provisions must be added to make emission credit deposits state enforceable at the time of deposit and to make emission credit withdrawals both state and federally enforceable at the time of use. As stated in the December 4, 1986 ETPS, emission credits obtained from a bank must meet the requirements of the applicable program(s) for which their use is intended (Whether bubbling to meet Reasonably Available Control Technology (RACT) source regulations or offsetting emissions for prevention of significant deterioration (PSD) or new source review (NSR) purposes) at the time the emission credits are to be used. The State (and the County) must allow for possible adjustments to the banked emission credits for air quality management purposes by stating the conditions under which banked emission credits can be altered or eliminated. The existence of banked emission credits cannot interfere with the State's (or County's) ability to obtain additional emission reductions to attain or maintain ambient air quality

standards. All external offsets must be federally enforceable. External offsets are those emission credit transactions which involve two or more sources of different ownership/control.

Schedules

EPA's SIP call required that Allegheny County submit a workplan by August 15, 1988 indicating the schedule for completing, among other activities, correction of deficiencies including those listed for the generic bubble regulations in Allegheny County. The schedule was not to exceed one year from the date of the workplan submittal. On September 1, 1988, Allegheny County submitted a workplan with a schedule to submit a final draft to correct all SIP deficiencies by September 30, 1989 and to adopt those changes on a schedule dependent on Pennsylvania's adoption of similar changes. The correction of section 808 deficiencies, while implied in the May 26, 1988 SIP call, was not specifically included. However, the SIP call letter stated that while every attempt had been made to identify all deficiencies, the State (or County) was requested to affirm the list of deficiencies by comparing its SIP with the guidance provided. Therefore, Allegheny County should correct the deficiencies identified in section 808 by submitting an approvable SIP revision to EPA by January 17, 1992.

On April 3, 1990, EPA informed Allegheny County that its banking regulations are substantially identical to Pennsylvania's regulations and that its regulations pertaining to bubbles and banking are deficient in the same respect. On September 28, 1990, Allegheny County was formally notified that EPA could begin the process of rescinding approval of, among other provisions, the generic bubble and banking provisions in the Allegheny County SIP if an approvable SIP revision was not submitted. The consequence of rescinding approval of the Allegheny County banking regulation will be to remove Allegheny County's authority to approve banking transactions without prior EPA approval.

Conclusion

Through the May 26, 1988 SIP call, Allegheny County was formally notified that its generic bubble regulations (section 506) and banking regulations (section 808) are deficient. EPA has previously brought to Allegheny County's attention the deficiencies in the banking regulations. Although EPA believes that the May 26, 1988 SIP call provided Allegheny County with formal notification that the banking regulations are deficient, this notice provides further notification of the specific deficiencies in section 808 banking provisions. Nothing in this notice should be construed as implicitly or explicitly making any determination regarding the nonattainment new source review portion of the Allegheny County SIP.

Action

The purpose of this notice is to reiterate the County's previous obligation to correct the banking regulations (or delete them), and to notify Allegheny County that it must submit an approvable SIP revision to EPA by February 18, 1992. Failure to submit an approvable SIP revision could result in an EPA action to rescind federal approval of the banking regulations in Allegheny County.

Under 5 U.S.C. 605(b), the Regional Administrator certifies that this SIP revision will not have a significant economic impact on a substantial number of small entities. (See 46 FR 8709.)

This Agency action is consistent with the provisions of the 1990 amendments enacted on November 15, 1990. The Agency has determined that this action conforms with those requirements irrespective of the fact that the deficiencies identified in the Allegheny County generic bubble and banking regulations were first identified prior to the 1990 Clean Air Act Amendments.

This action, pertaining to a notice of deficiency for the Allegheny County banking regulation, has been classified as a Table 3 action by the Regional Administrator under the procedures published in the Federal Register on January 19, 1989 (54 FR 2214–2225).

List of Subjects in 40 CFR Part 52

Air pollution control, Ozone, Hydrocarbons, Intergovernmental relations, Reporting and Recordkeeping requirements.

Authority: 42 U.S.C. 7401–7642.

Dated: December 6, 1991.

Edwin B. Erickson,

Regional Administrator.

[FR Doc. 91–30098 Filed 12–16–91; 8:45 am]

BILLING CODE 6560–50–M

[OPTS–42118; FRL 3945–8]

40 CFR Part 799

Testing Consent Order For Sodium Cyanide

AGENCY: Environmental Protection Agency (EPA).

ACTION: Final Rule.

SUMMARY: This document announces that EPA has signed an enforceable testing Consent Order with E.I. du Pont de Nemours and Company (DuPont), FMC Corporation (FMC), Degussa Corporation (Degussa), ICI Americas Incorporated (ICI), and Cyanco Company (Cyanco), hereinafter referred to as "the Companies." The Companies have agreed to perform certain chemical fate and terrestrial effects tests on sodium cyanide (NaCN; CAS No. 143–33–9). This sodium cyanide (NaCN) Consent Order is added to the list of testing consent orders in 40 CFR 799.5000 for which export notification requirements of 40 CFR part 707 apply. This rule constitutes EPA's response to the Interagency Testing Committee's (ITC) recommendation that EPA consider chemical fate and terrestrial effects tests on sodium cyanide.

EFFECTIVE DATE: December 17, 1991.

FOR FURTHER INFORMATION CONTACT: David Kling, Acting Director, Environmental Assistance Division (TS–799), Office of Toxic Substances, rm E–543B, 401 M St., SW., Washington, DC 20460, (202) 554–1404, TDD (202) 554–0551.

SUPPLEMENTARY INFORMATION: Under procedures described in 40 CFR part 790, the Companies have entered into a testing Consent Order with EPA, and have agreed to perform certain chemical fate and terrestrial effects tests for NaCN, (CAS No. 143–33–9). This rule amends 40 CFR 799.5000 by adding NaCN to the list of chemical substances and mixtures subject to testing Consent Orders.

I. Recommendation

In its Twenty-sixth Report to EPA, published in the Federal Register of June 5, 1990 (55 FR 23050), the ITC recommended with intent-to-designate NaCN for environmental effects testing. The rationale for the original recommendation with intent-to-designate appeared in the ITC's Twenty-sixth Report. In its Twenty-seventh Report to EPA published in the Federal Register of March 6, 1991 (56 FR 9534), NaCN was designated as a candidate for rulemaking under TSCA and the testing recommendations were changed because discussions with the Department of Interior (DOI), EPA, and industry identified additional testing data gaps. The Twenty-seventh Report designated certain chemical fate and terrestrial effects tests for NaCN. Specifically, the ITC recommended soil sorption testing as well as testing for

UNITED STATES ENVIRONMENTAL PROTECTION AGENCY
Office of Air Quality Planning and Standards
Research Triangle Park, North Carolina 27711

FEB 25 1992

MEMORANDUM

SUBJECT: Contingency Measure Due Date for Initial PM-10 Moderate Nonattainment Areas

FROM: John Calcagni, Director
Air Quality Management Division (MD-15)

TO: Director, Air, Pesticides and Toxics Management Division, Regions I and IV
Director, Air and Waste Management Division, Region II
Director, Air, Radiation and Toxics Division, Region III
Director, Air and Radiation Division, Region V
Director, Air, Pesticides and Toxics Division, Region VI
Director, Air and Toxics Division, Regions VII, VIII, IX, and X

In the August 1991 "Questions and Answers" guidance, the Office of Air Quality Planning and Standards indicated that States containing areas designated nonattainment for particulate matter (PM-10) under section 107(d)(4)(B) of the Clean Air Act (Act) ("initial nonattainment areas") were obligated to submit the contingency measures required by section 172(c)(9) of the Act on November 15, 1991. This memorandum explains that the Agency has not taken the steps necessary to sanction States with initial PM-10 moderate nonattainment areas for failing to submit the contingency measure requirement by November 15, 1991.

Section 172(c) of the Act spells out general nonattainment plan provisions that applicable implementation plans required under Part D must meet. Section 172(c)(9) addresses the requirement for contingency measures. Section 172(b) indicates that the Administrator shall establish a schedule according to which the provisions required under section 172(c) must be submitted; such schedule, however, may not extend later than 3 years from the affected areas' nonattainment designation.

Part D also contains provisions specifically addressing PM-10 requirements [see generally, Subpart 4]. Among other things, these provisions set out specific plan requirements and associated submittal dates for PM-10 nonattainment areas. For example, section 189(a) indicates that moderate nonattainment areas must submit plan provisions demonstrating attainment by the applicable attainment date or demonstrating that attainment by such date is impracticable. Section 189(a) also requires moderate areas to submit provisions assuring the implementation of reasonably available control measures (RACM) by certain dates as well as provisions meeting new source review requirements. Section 189(a) sets out the specific schedules for these plan provisions, requiring, for example, that the initial PM-10 nonattainment areas submit RACM and a demonstration by November 15, 1991.

The Office of General Counsel has informed us that because Subpart 4 contains no express contingency measure requirement and because the contingency measure requirement does not appear to be integrally related to any other requirement in Subpart 4, the due date for the requirement would be the schedule set by the Administrator under section 172(b).[1] However, the Administrator has not set a schedule for the PM-10 contingency measure submittal. The August 1991 guidance was not issued by the Administrator. Therefore, until the Administrator establishes the due date, States are not obligated to submit contingency measures.

To the extent that States have already submitted contingency measures, we encourage the Regions to approve these plans, as appropriate. However, States should be advised that they will have additional time to submit contingency measures meeting the requirements of section 172(c)(9). Therefore, if a State has submitted or submits the contingency measure requirement before the due date and it appears that the submittal will not be fully approvable, the State could withdraw the measures and submit a revised plan without penalty. Alternatively, the Region could grant a limited approval of the plan. In this instance, the limited approval should not be accompanied with a limited disapproval since EPA would be acting on the State's submittal before it is due. However, the State would be obligated to supplement its submittal appropriately by the deadline.

---

[1]Note that some provisions in section 172(c) appear to be integrally related to a requirement in Subpart 4. For example, the emissions inventory required under section 172(c) is integrally related to the demonstration required under section 189(a). In such instance, the timing of the requirement would be controlled by the Subpart 4 submittal.

Please do not hesitate to contact Gwen Jacobs (FTS 629-5295) if you have any questions about these procedures.

cc: Alan Eckert, OGC
Rich Ossias, OGC
Joe Paisie, AQMD
Gwen Jacobs, AQMD

UNITED STATES ENVIRONMENTAL PROTECTION AGENCY
REGION VIII
999 18th STREET - SUITE 500
DENVER, COLORADO 80202-2405

MAR 13 1992

Ref: 8ART-AP

Jeffrey T. Chaffee, Chief
Air Quality Bureau
Department of Health and Environmental
Sciences
Cogswell Building
Helena, Montana 59620

Re: East Helena Lead SIP

Dear Jeff:

EPA has reviewed the two most recent reports prepared in support of the East Helena Lead SIP, namely the February 3, 1992 report entitled "Design Value Modeling Report; Revised East Helena, Montana, Lead SIP" and the February 10, 1992 report entitled "Supplementary Reconciliation and Verification of ISCST Dispersion Model Lead Apportionments for East Helena, Montana - First and Second Quarters, 1991". Our review of these reports with regard to the respective protocols, which were conditionally approved on December 24, 1991, indicates that, in general, the analyses have been performed in accordance with the approved modeling protocols. However, EPA requests that, for future reports related to the Lead SIP, the State also provide a summary of its review of the material received from Asarco; to date, we have received only verbal comments from John Coefield on these reports. EPA in its oversight and technical support role will then review the information provided. This type of coordination will greatly assist both of our agencies in reducing the amount of questions that may arise during EPA's review of the SIP submittals. Because of the short timeframes associated with the East Helena Lead SIP, we appreciate receiving the materials concurrently with the State; however, in the future we would like to receive the State's comments before providing our final comments on these materials.

The model verification work shows that the reconciled ISCST model meets the performance verification criteria established for this study, and therefore EPA is approving the reconciled ISCST model for use in the Lead SIP attainment demonstration. The supplemental analysis prepared for the first and second quarters of 1991 greatly increases our confidence in the year-round applicability of the ISCST model to the East Helena area.

With respect to the design value modeling, EPA does not concur with the request contained in Asarco's letter of January 31, 1992, that certain receptors be exempt from the Lead SIP modeling efforts. All receptor locations that may affect control

strategy requirements, and meet the definition of "ambient air", must be included in regulatory modeling applications. Ambient air is defined in 40 CFR Part 50.1(e) as "that portion of the atmosphere, external to buildings, to which the general public has access". Receptor points 180 and 197 are adjacent to a roadway to which the public clearly has access; thus, they must be included in the SIP modeling analysis. Although siting criteria may preclude placement of ambient monitors at these receptors, as was discussed by Asarco, this does not preclude the placement of model receptors at these sites. Finally, EPA notes that a successful model reconciliation has been completed, pursuant to an agreed-upon modeling protocol which did not provide for possible downwash effects of the slag pile. EPA thus considers the ISCST predictions at receptor locations 180 and 197 to be reliable, and that it is inappropriate at this time to reopen the issue of slag pile downwash.

Therefore, based upon the design value modeling, the predicted design value of 11.493 ug/m^3, modeled at receptor 180, appears to be valid. Specific comments on the design value report are included in the enclosure to this letter. These comments do not affect the "bottom line" of the design value modeling; however, the final SIP submittal describing the design value modeling must address these issues to ensure accurate documentation of the design value calculation.

Because the March 11, 1991 revised East Helena Lead SIP modeling protocol only briefly addressed the development of control strategies and the attainment demonstration, in this letter EPA would like to summarize the procedures which we believe are necessary during those phases of the SIP development. In particular, the following procedures and protocol will need to be addressed:

1. The East Helena area has been designated as nonattainment for the lead NAAQS; this designation was effective January 6, 1992 (see Federal Register notice 56 FR 56694.) Therefore, the forthcoming SIP must meet the Part D nonattainment plan provisions which are set forth in Section 172 of the CAA. Section 172(c) specifies that SIPs submitted to meet the Part D requirements must, among other things, include reasonably available control measures (RACM) (which includes reasonably available control technology (RACT)), provide for reasonable further progress, provide for nonattainment area new source review, contain contingency measures, and meet the applicable provisions of Section 110(a)(2).

   Therefore, the attainment year strategy must reflect the implementation, at a minimum, of RACM and RACT. The SIP must fully and adequately document these control measures, and indicate how these measures meet all requirements for

federal enforceability. Using the controls determined by the attainment year control strategy analysis, the State should develop a "post-control" attainment year emission inventory. This inventory should reflect allowable emissions. As indicated in Table 9-1 of the Guideline of Air Quality Models (Revised), allowable emissions are determined as follows: for emission limits, this is the maximum allowable or federally-enforceable permit limit; for operating level, this is the actual or design capacity (whichever is greater), or federally-enforceable permit condition; for operating factor, this is the actual operating factor averaged over the most recent two years. Also, the impact of growth on emissions should be considered in the attainment year modeling analysis.

2. Using the emissions inventory developed as indicated above, the reconciled ISCST model should be re-run, using the one year of on-site meteorology. One condition for approval of the Lead SIP is that the predicted attainment year quarterly average lead concentrations must be equal to or below 1.5 ug/m^3 at all receptor points. Other than emission rate changes to reflect RACM/RACT, and other changes directly associated with the implementation of the control measures, the inputs to the SIP attainment demonstration modeling run should be identical to those used in the design value modeling.

Please feel free to contact Mindy Mohr at (303) 294-7539 with any questions regarding this response. We look forward to continued excellent progress on the East Helena Lead SIP.

Sincerely,

Douglas M. Skie, Chief
Air Programs Branch

Enclosure

cc: Terry Coble, Asarco (with enclosure)
P.O. Box 1230
East Helena, MT 59635

Federal Register

Thursday
April 16, 1992

Part III

Environmental Protection Agency

40 CFR Part 52

State Implementation Plans; General Preamble for the Implementation of Title I of the Clean Air Act Amendments of 1990; Proposed Rule

ENVIRONMENTAL PROTECTION AGENCY

40 CFR Part 52

[FRL-4120-2]

RIN 2060-AD12

State Implementation Plans; General Preamble for the Implementation of Title I of the Clean Air Act Amendments of 1990

AGENCY: Environmental Protection Agency (EPA).

ACTION: General preamble for future proposed rulemakings.

SUMMARY: Title I of the Clean Air Act Amendments (CAAA) of 1990 revamped the requirements for areas that have not attained the national ambient air quality standards (NAAQS) for ozone, carbon monoxide (CO), particulate matter (PM-10), sulfur dioxide (SO_2), nitrogen dioxide (NO_2), and lead. In addition, title I made numerous changes in the requirements for State implementation plans (SIP's) in general, including the provisions governing EPA's processsing of SIP revisions, as well as the repercussions of State failures to meet the various SIP requirements. Many of these requirements call for early action by the States. For example, under title I, States with pre-enactment ozone nonattainment areas were to begin submitting SIP revisions 6 months after enactment (May 15, 1991).

This General Preamble principally describes EPA's preliminary views on how EPA should interpret various provisions of title I, primarily those concerning SIP revisions required for nonattainment areas. Although the General Preamble includes various statements that States must take certain actions, these statements are made pursuant to EPA's preliminary interpretations, and thus do not bind the States and the public as a matter of law. In the near future, EPA will begin to take action, pursuant to notice-and-comment rulemaking, on SIP revisions submitted by the States, and issue rules, pursuant to notice-and-comment rulemaking, on various title I provisions. During the comment periods for those subsequent actions, members of the public will have the opportunity to comment on the relevant issues. This General Preamble is an advance notice of how EPA generally intends, in those subsequent rulemakings, to take action on SIP submissions and to interpret various title I provisions.

FOR FURTHER INFORMATION CONTACT: Mr. Brock Nicholson, Chief, Policy Development Section, Ozone/CO Programs Branch (MD-15) at (919) 541-5517, for issues related to ozone or carbon monoxide; Mr. Eric Ginsburg at (919) 541-0877, Sulfur Dioxide/Particulate Matter Programs Branch (MD-15), for issues related to sulfur dioxide, particulate matter, or lead; Mr. Gary McCutchen at (919) 541-5592, Permits Programs Branch (MD-15), for issues related to new source review, U.S. Environmental Protection Agency, Research Triangle Park, North Carolina 27711; Ms. Paula Van Lare at (202) 260-3450 for issues related to mobile sources, 401 M Street, SW., Washington, DC 20460.

SUPPLEMENTARY INFORMATION:

Note: In accordance with 1 CFR 5.9(c), this document is published in the Proposed Rules category.

A list of cited references are contained in the appendices which are available from the public docket, A-91-35 at EPH, 400 M Street, S.W. Washington, D.C. Appendices A through E will be published in a subsequent Federal Register.

OUTLINE

I. Purpose
II. Background
A. History
B. Overview of title I of 1990 CAAA
1. Designations/classifications
2. Pollutant-specific requirements
3. General requirements
4. Part D, subpart 1
5. Miscellaneous
6. Relationship between titles I and II of 1990 CAAA
III. SIP Requirements
A. Ozone
1. General
2. Marginal areas
3. Moderate areas
4. Serious areas
5. Severe areas
6. Extreme areas
7. Nonclassifiable nonattainment areas
8. Transport areas
9. Multi-state ozone nonattainment areas
B. Carbon Monoxide
1. Moderate areas 12.7 ppm and below
2. Moderate areas above 12.7 ppm
3. Serious areas
4. Nonclassifiable areas
5. Multi-state CO attainment areas
6. Areas with significant stationary source emissions
7. Guidance on waivers for mobile source measures
C. Particulate Matter
1. Statutory background
2. Determination of RACM/RACT
3. SIP's that demonstrate attainment
4. SIP's that do not demonstrate attainment
D. Sulfur Dioxide
1. Designations
2. Classifications
3. Plan submission deadlines
4. Attainment dates
5. Nonattainment plan provision
6. Sources of SO_2 policy and guidance
E. Lead
1. Statutory background
2. Pre-SIP submittal activities
3. Transition issues
F. Nitrogen Dioxide
1. Designations
2. Plan deadlines
3. Attainment dates
4. Nonattainment plan provisions
G. New Source Review (NSR)
Nonattainment Permit Requirements
1. Contruction bans
2. Emissions offsets
3. Creditable emission reductions for netting
4. Growth allowances
5. Analysis of alternatives
6. Control technology information
7. Innovative controls for rocket engines and motors
8. Exemptions for stripper wells
9. Outer Continental Shelf Source Applicability
10. Tribal lands applicability
11. Stationary source definition
12. Temporary clean coal technology demonstration projects
13. Failure to submit NSR rules by statutory deadlines
H. General
1. Part D, subpart 1/section 110 (to the extent not covered under pollutant-specific)
2. Conformity
3. Planning requirements including section 174
4. Economic incentives
5. Section 172(c)(1) requirement for all Reasonably Available Control Measures (RACM)
6. Redesignations
7. Transition issues
8. General savings clause
IV. EPA Requirements
A. SIP Processing Requirements
1. Completeness
2. Partial approvals
B. Sanctions and Other Safeguards
1. Background under 1977 CAAA
2. Available measures under 1990 CAAA
3. Application and timing of the section 179 Sanctions
C. Federal Implementation Plans (FIP's)
V. Miscellaneous
A. Relationship of Title I to Title V
1. Introduction
2. Purposes of a SIP
3. Fundamental principles for SIP's/control strategy
4. Satisfying SIP principles
5. Approaches to ensure that permits properly support SIP's
B. Tribal Implementation Plans
C. Section 179B Requirements
VI. Other Requirements
A. Executive Order 12291
B. Regulatory Flexibility Act

I. Purpose

The primary purpose of this preamble is to provide the public with advance notice of how EPA generally intends to interpret various requirements and associated issues that have arisen under title I of the CAAA. The information

provided in this preamble is therefore intended to guide States and to help ensure that they prepare and submit SIP's or SIP revisions that adequately comply with the title I provisions. For quick reference, title I submittals and other actions concerning ozone and CO nonattainment areas required during the early years following the November 15, 1990 enactment of the 1990 CAAA, are listed chronologically (by the date each action is due) on Table 1.

TABLE 1.—MAJOR REQUIRED STATE SUBMITTALS AND ACTIONS

Submittal/action	Ozone classification					CO classification	
	Marginal	Moderate	Serious	Severe	Extreme	Moderate	Serious
By March 15, 1991 (120 days after enactment) [1]:							
A request for more time to study boundaries for serious + area that was designated and classified as of enactment (due 45 days after classification).			X	X	X		X
List of all areas with proposed designations and boundaries (except boundaries for serious + areas with requests for more time to study).	X	X	X	X	X	X	X
A request for more time to study boundaries for serious + area that was designated and classified at 240 days after enactment (requested to be in March 15, 1991, submittal; latest date for request is August 27, 1991).			X	X	X		X
Commitment to submit SIP revision to correct I/M program (i.e., implement previously-required program) ("immediate submittal" of revision for I/M) [2].	X					X	
Commitment to submit SIP revision to implement basic I/M program ("immediate submittal" of revision for I/M) (plus serious areas where urbanized population < 200,000) [2].		X					
By May 15, 1991 (6 months after enactment):							
Submit RACT Corrections	X	X	X	X	X		
Northeast ozone transport commission convenes (applies to Northeast transport region).							
By May 15, 1992 (18 months after enactment):							
Commence actions to adopt and implement enhanced monitoring program requirements.			X	X	X		
By November 15, 1992 (24 months after enactment):							
Submit comprehensive emission inventory	X	X	X	X	X	X	X
Submit requirements for emission statements	X	X	X	X	X		
Submit VOC RACT rules (existing CTG's; non-CTG major sources).		X	X	X	X		
Submit NSR rules	X	X	X	X	X		
Submit Stage II vapor recovery program		X	X	X	X		
Submit Enhanced I/M program; begin implementation [2]			X	X	X		
Submit requirements for transport region (VOC, NO_x, RACT and NSR; Enhanced I/M) (applies across transport region).							
Submit conformity requirements [3]	X	X	X	X	X	X	X
Submit measure for reducing VMT				X	X		X
Submit CO attainment demonstration						[3]X	X
Submit contingency measures (if VMT forecasts exceeded)						[3]X	X
Submit transportation control measures (TCM's)				X	X		X
Submit revision requiring employer trip reduction programs (25% vehicle occupancy rate reductions).				X	X		
Submit oxygenated fuel program						X	X
By November 15, 1993 (36 months after enactment):							
Submit "15% SIP" (i.e., measures showing 15% reduction in VOC baseline).		X	X	X	X		
Submit demonstration re: additional VOC, NO_x reductions as necessary to attain.		X					
Submit NSR program (CO)						X	X
Submit contingency measures for failures to meet milestones			[4]	X	X		
By November 15, 1994 (4 years after enactment):							
Submit attainment demonstration (photochemical dispersion modeling).			[4]	X	X		
Submit RFP demonstration showing 3% average annual reductions commencing 6 years after enactment.			X	X	X		
Submit clean-fuel vehicle program			[4]X	X	X		
Submit Stage II program (or "reflect comparable measures") in transport region.							
Submit plans to incorporate EPA's emission diagnostic rules (estimated time).	X	X	X	X	X		

[1] Certain submittals/actions may actually be required before the end of the time period specified. Check the narrative portion of the document for specific submittal time schedules. Also, the NO_x requirements of CAA section 182(f) will be addressed in supplements to the General Preamble.
[2] See Preamble discussion regarding compliance with submittal dates.
[3] Submittal dates will be delayed pending EPA rulemaking.
[4] Applies to ares with design values > 12.7 ppm.
[4] As applicable in regards to Title II requirements.

The EPA's interpretation of title I provisions provided in the preamble will also provide a basis for subsequent EPA approval or disapproval of SIP submittals concerning NAAQS nonattainment areas. While this preamble should reflect the majority of the SIP requirements under title I, unique circumstances or as yet

unrecognized issues are likely to cause case-by-case exceptions to arise. The EPA intends to provide the public with a formal opportunity to comment on the provisions of this preamble, and other issues that may arise during subsequent rulemakings that take action on SIP revisions submitted by the States under title I and that set out EPA policy on various aspects of title I. This preamble is a General Preamble for those subsequent actions.

This preambles focuses primarily on the SIP submissions required for nonattainment areas under part D of the amended Act. It discusses specific issues concerning the proper interpretation of the title I requirements of areas designated nonattainment (and, for some pollutants, classified) under part D, title I, as well as the proper treatment of nonattainment areas that fall outside of the classification schemes. This preamble discusses requirements for the SIP submissions required for ozone, CO, PM–10, SO_2, NO_2, and lead nonattainment areas. In addition, this preamble discusses interpretation issues that have arisen concerning redesignations at attainment, some general SIP requirements, and EPA action on SIP submissions, as well as the various types of possible State failures to meet certain requirements and the consequent sanctions and Federal implementation plans (FIP's).

This preamble also sets forth EPA's interpretation of the various provisions in the amended Clear Air Act (Act) which change new source review (NSR) requirements for new and modified sources in nonattainment areas. The discussion includes EPA's intended interpretation of the minimum changes all States must make in their SIP's in order to comply with the amended NSR requirements and the deadlines for making these changes. States should use this General Preamble as guidance for revision of their NSR programs and submittal of their NSR SIP's. The Act mandated deadlines for NSR SIP submittals are: May 15, 1992 for areas without approved SO_2 SIP's prior to enactment; November 15, 1993 for all other SO_2 nonattainment areas designated prior to enactment; May 15, 1992 for NO_2; July 6, 1993 for lead nonattainment areas designated January 6, 1992; June 30, 1992 for PM–10 nonattainment areas; November 15, 1992 for ozone nonattainment areas and transport regions; November 15, 1993 for CO nonattainment areas with a design value of 12.7 ppm or less; and November 15, 1992 for CO nonattainment areas with a design value above 12.7 ppm. For future designations, NSR SIP submittals are due within 18 months from redesignation of all SO_2, NO_2, PM–10 and lead nonattainment areas, and within 2 years of redesignation for ozone and many CO nonattainment areas (within 3 years for CO nonattainment areas with design values less than 12.7 ppm).

Note also that these changes apply not only in designated nonattainment areas, but in ozone transport regions, certain tribal lands that are either in nonattainment areas or ozone transport regions, and to specified sources in the Outer Continental Shelf (OCS) area. The EPA intends to amend its existing NSR regulations (see 40 CFR 51.165, 51.166, 52.21, and 52.24) to reflect the changes mandated by the 1990 CAAA. Certain changes to the NSR requirements of the prevention of significant deterioration (PSD) program, part C, title I, will be addressed in a separate EPA proceeding and are not addressed in this preamble.

The timeframe, or scope, of this General Preamble covers the 6-year period following enactment. The SIP submittals for all affected areas are required to be developed, submitted, and approved by EPA within this time period. Complete plan submittals are required for certain PM–10 areas within 1 year of enactment. For ozone and CO nonattainment areas, regulations, emission inventories, control-measure strategies, and attainment demonstrations are due at varying dates from 6 months to 5 years after enactment. Generally, the guidance provided this document is intended to guide nonattainment SIP development until further statutory requirement are issued or EPA determines that revisions are appropriate.

The scope of this General Preamble is limited regarding several new provisions of the 1990 CAAA concerning emissions of the oxides of nitrogen (NO_x). Specifically, the General Preamble does not include a discussion of the new NO_x provisions with respect to the following topics: reasonably available control technology, new source review, interaction of titles I and IV, ozone transport region, section 185B report, and section 182(f). However, EPA recongizes the importance of providing timely guidance to the states to help assure the development and implementation of cost-effective control measures to reduce ozone levels. Accordingly, EPA will issue guidance as soon as possible, as in supplements to the General Preamble.

Six years is a significant milestone in the 1990 CAAA. Within 6 years of enactment, ozone nonattainment areas classified as moderate and above must achieve a 15 percent reduction in volatile organic compound (VOC) emissions, and moderate areas must attain the NAAQS. In addition, moderate CO nonattainment areas must also attain the NAAQS by December 31, 1995. Sulfur dioxide, PM–10, lead, and NO_2 nonattainment areas must also meet significant statutory milestones within the 6-year period.

The appropriate SIP components necessary to meet these goals by the sixth year and to provide adequate plans (due within the first 6 years) for attaining the NAAQS by the appropriate dates beyond the sixth year are covered in this General Preamble. To some extent, this preamble also applies to the period beyond 6 years. For example, it includes much of the guidance applicable to areas designated nonattainment for SO_2, PM–10, and lead beyond the 6-year period. Other guidance that covers the period beyond 6 years from enactment, demonstrating attainment of milestones or NAAQS and future planning for cities with the most significant air pollution problems, will be covered in future supplements to this General Preamble, as necessary.

This preamble is organized to meet the needs of individuals wanting either an overview of EPA's preliminary interpretation of the various provisions of title I of the 1990 CAAA or a detailed discussion of SIP submittal requirements for a specific NAAQS nonattainment classification. An area with a higher nonattainment classification (i.e., it more greatly exceeds a NAAQS than do areas with lower nonattainment classifications for the same NAAQS) generally must adopt all measures required of areas with lower nonattainment classifications, along with specific measures required for the higher classification. Therefore, the general introductory material at the beginning of the preamble and the material describing SIP requirements for all those levels of NAAQS nonattainment equal to or lower than the classification promulgated for a particular nonattainment area, are applicable to the area.

The General Preamble includes citations to its own sections and to sections of various Act (or CAAA) versions. Citations usually comply with the following conventions:

1. General Preamble sections begin with a roman numeral.

2. The Act is referenced by section [or by title (I–V), part (A–D of title I, A–C title II)].

3. Earlier versions of the Act and the 1990 (or earlier) CAAA are identified by date or other specific reference.

A glossary listing the various acronyms used in this document is in appendix A. The bibliography for and list of cited references in this preamble is in appendix B.

II. Background

A. History

The long history of the Clean Air Act (Act) extends back before 1970. A summary of significant events occurring during its development is given in 52 FR 45044 (November 24, 1987).

That summary was part of EPA's proposed Post-1987 Ozone and CO Policy, which focused on requirements for areas that failed to attain the NAAQS by the statutory deadline of December 31, 1987. These proposed requirements included correcting certain SIP deficiencies and fully implementing the 1982 SIP's, adopting enhanced inspection and maintenance (I/M) programs, and submitting revised SIP's that demonstrated attainment over an expanded planning area as expeditiously as practicable by achieving at least a 3 percent per year reduction in the base year emissions.

On May 26, 1988 (in accordance with section 110(a)(2)(H)), EPA began issuing notices of SIP inadequacy (SIP calls) contained in letters to the Governors of States with areas that failed to attain the ozone and CO standards or that contributed to violations of the standards (see 53 FR 34500 (September 7, 1988)). These letters called on States to complete "Phase I" of their SIP call response. Under that phase, the States were to correct the SIP where it failed to meet EPA's existing part D guidance relating to control of VOC and CO emissions from stationary sources, satisfy unimplemented SIP commitments by adopting any missing control measures, and begin updating the base year emissions inventory for future attainment plans.

Beyond the basic attainment planning requirements discussed in the proposed Post-1987 Ozone and CO Policy, the 1977 CAAA included preconstruction permitting requirements for major new and modified sources under two programs, PSD and nonattainment NSR (respectively, parts C and D of title I). In nonattainment areas, new or modified sources as part of a preconstruction review process must (among other things): Obtain emissions offsets, and adopt control technology meeting a lowest achievable emission rate (LAER) standard. In 1980, EPA adopted new final regulations detailing SIP requirements to implement the NSR programs of parts C and D (see 45 FR 52676). The preamble to these regulations should be consulted for an in-depth discussion of the history of the NSR provisions of title I as well as a detailed explanation of program requirements prior to the 1990 CAAA.

B. Overview of Title I of 1990 CAAA

One of the main goals of the 1990 CAAA was to overhaul Act provisions that concerned planning for NAAQS attainment. Although one of the chief motivations for amending the Act was the failure of areas to attain the ozone and CO standards, the process of amending the statute provided an opportunity to address on a comprehensive basis the defects in existing law.

Title I of the CAAA (Provisions for Attainment and Maintenance of NAAQS) for the most part amends and supplements title I of the Act (Air Pollution Prevention and Control).[1] In light of the massive sweep and complexity of title I (1990 CAAA), the reader may find it helpful to view the Title as a collection of six sets of requirements. The following discussion provides a brief overview of these six sets:

1. Designations/Classifications

This set of requirements amends section 107 and the classification provisions in part D (Plan Requirements for Attainment) of the Act. For instance, section 181 addresses ozone classifications and section 186 addresses CO classifications. Specific requirements, by classification, are discussed in section III.A. and section III.B. of this notice.

2. Pollutant-specific requirements

Pollutant-specific requirements for designated ozone; CO; PM-10; and SO_2, NO_2, and lead nonattainment areas are found in part D at subparts 2, 3, 4, and 5, respectively. Where a conflict exists, the pollutant-specific requirements override the new-source permit requirements of section 173.

3. General Requirements

The revised general requirements for all plans regardless of the attainment demonstration required appear early in title I of the CAAA.

Note: The amendments modify numerous sections of the Act, including sections 107, 110, and 171 through 179. These general requirements include procedures for EPA review of SIP submittals (new Act section 110(k)); action on SIP revisions (section 110(1)) and a revised list of requirements for all plans (section 110(a)(2)).

4. Part D, subpart 1

This set includes general requirements for all designated nonattainment areas, especially those designated under new and revised NAAQS. In Subpart 1, Congress repealed the 1987 attainment deadlines for ozone and CO. In some cases, the pollutant-specific requirements contained in subparts 2–5 of part D override subpart 1's general provisions. Subpart 1 also includes a process governing sanctions for State failure to meet statutory requirements. Beyond that, it includes revised new-source permit requirements (section 172(c)(5) and section 173).

5. Miscellaneous

Other provisions of the Act address a variety of topics. Most of these provisions appear toward the end of title I of the CAAA. For example, new Act section 193 (technically in a new subpart 6 of part D) sets forth a "General Savings Clause" governing retention of certain types of previously enacted or mandated requirements. The new Act section 301(d) contains provisions related to Indian tribes. The miscellaneous provisions also include guidance on planning and transportation-related provisions.

6. Relationship Between Titles I and II of 1990 CAAA

Title I generally addresses the nonattainment SIP requirements and title II deals with control of mobile source emissions. While title II principally deals with Federally implemented programs (e.g., Federal Motor Vehicle Control Program (FMVCP)), requirements related to SIP's, such as fuels programs and Reid vapor pressure (RVP), are also contained in the title. Therefore, guidance on implementing these programs will also be provided in this document.

III. SIP requirements

A. Ozone

1. General

(a) *Classifications.* New subpart 2 of part D (section 181) sets a new classification structure for ozone nonattainment areas based on the severity of the nonattainment problem. For each area classified under this section, the attainment date shall be as expeditious as practicable but no later than the date in the following table. The classification scheme is as follows:

[1] The CAAA also amend other titles; for example, new section 301 of the Act adds provisions regarding treatment of Indian tribes to title III of the Act.

Area classification	Design value, ppm	Primary standard attainment date
Marginal	0.121 up to (but not including) 0.138.	November 15, 1993.
Moderate	0.138 up to (but not including) 0.160.	November 15, 1996.
Serious	0.160 up to (but not including) 0.180.	November 15, 1999.
Severe	0.180 up to (but not including) 0.280.	November 15, 2005.
Extreme	0.280 and above.	November 15, 2010.

Additionally, a severe area with a 1986 to 1988 ozone design value of 0.190 up to, but not including, 0.280 parts per million (ppm) has 17 years (until November 15, 2007) to attain the NAAQS.

The designation/classification process for ozone was described in 56 FR 56694 (November 6, 1991).

(b) *Special classifications.* In addition to the five air quality-based classifications, some nonattainment areas do not fit into the classification scheme of section 181(a). The EPA has classified these areas as transitional, submarginal, or areas with incomplete data. Section III.A of this preamble describes the requirements for all areas (marginal to extreme and the special classifications) in much the same way as they are described in section 182.

(c) *Planning.* As provided in subpart 2, emission inventories, provisions for Stage II gasoline vapor recovery, motor vehicle I/M, NSR, stationary-source reasonably available control technology (RACT), and certain other planning or control measures are required within 2 years after enactment (November 15, 1992) for most of the previously and newly designated nonattainment areas. For a very few nonattainment areas, final determination of the nonattainment area boundries may not occur until only a few months before several major rules (e.g., Stage II, I/M, transportation control measures (TCM's), NSR, RACT) and the emission inventory must be submitted. These nonattainment areas should not delay their adoption of rules or preparation of inventories while the boundary determinations are proceeding. Rather, these areas should be prepared to readily adopt rules and complete their emission inventories for the broadest area under consideration should EPA conclude that such broader area is appropriate. The 1990 CAAA require all submittals due within 2 years (November 15, 1992) to address the entire nonattainment area; these submittals can not be delayed due to the final boundaries rulemaking under section 107(d).

(d) *Enforceability.* The EPA has recently developed new model RACT rules (which supersede the previously issued model rules) for controlling VOC emissions from source categories covered by the Group I, II, and III control technique guidelines (CTG's). These model rules are intended to be used by areas subject to RACT "fix-up" requirements in correcting existing RACT rules, as required by section 182(a) (see section III.A.2, marginal areas below), and by areas subject to RACT "catch up" requirements that are required to apply RACT measures in accordance with section 182(b)(2) of the Act (see section III.A.3, moderate areas below). The model RACT rules include provisions for compliance certification, recordkeeping, reporting, monitoring, and test methods and procedures to enable EPA and the States to determine compliance with the requirements of the regulations. For a number of source categories, these compliance provisions have been added to the model RACT rules to improve enforceability because the CTG's and previous guidance for these sources did not include such requirements.

In general, for a SIP regulation to be enforceable, it must clearly spell out which sources or source types are subject to its requirements and what its requirements (work practices, emission limits, etc.) are. The regulation also needs to specify the time frames within which these requirements must be met, and must definitively state recordkeeping and monitoring requirements appropriate to the type of sources being regulated. The recordkeeping and monitoring requirements must be sufficient to allow determinations on a continuing basis whether sources are complying. An enforceable regulation must also contain test procedures in order to determine whether sources are in compliance.

(e) *Structure of requirements.* for areas classified marginal to extreme, virtually all requirements are additive (e.g., a moderate area has to meet all marginal and moderate requirements, unless otherwise specified). The text below presents the requirements in the first applicable classification, then repeated only if the requirements are different for a higher classification.

2. Marginal Areas

(a) *Emission inventory.* See appendix B for pertinent guidance on emissions inventory requirements.

(1) *Schedule.* Section 182(a)(1) requires all nonattainment areas to submit a final, comprehensive, accurate, and current inventory of actual ozone season, weekday emissions from all sources within 2 years of enactment (November 15, 1992). The EPA requests that the draft inventory be submitted between January 1 and May 1, 1992 in order to facilitate early review and allow the submittal of an acceptable inventory in November 1992.

(2) *Requirements.* This initial inventory is for calendar year 1990 and is denoted as the base year inventory. It includes both anthropogenic and biogenic sources of VOC, NOx and CO. The inventory is to address actual VOC, NOx, and CO emissions for the area during the peak ozone season, which is generally the summer months. All stationary point sources and area sources, as well as highway and nonhighway mobile sources within the nonattainment area, stationary sources with emissions of 100 tons or greater per year within a 25-mile wide buffer of the designated nonattainment area, and any OCS sources are to be included in the compilation. Including sources within a 25-mile buffer is necessary to ensure that all sources capable of affecting air quality within the nonattainment area are adequately accounted for in modeling demonstrations and strategy development. For nonattainment areas that are required to do photochemical grid modeling pursuant to section 182(c)(2)(A) (see sections III.A.4.e, serious areas, and III.A.9, multi-State areas), the modeling domain will determine the appropriate size of the area that must be inventoried for modeling purposes.

As one of the first steps in developing the base year inventory, the States are to prepare an inventory preparation plan (IPP), which is due in final form to EPA by October 1, 1991. The IPP should briefly state how the State intends to develop, document, and submit its inventory. Another early step in the inventory development process is preparation of the point source portion of the base year inventory. Guidance for preparing emission inventories was issued in May 1991 ("Procedures for the Preparation of Emission Inventories for Carbon Monoxide and Precursors of Ozone, Volume I"). Because the point source portion of this guidance is essentially the same as it was for the post-1987 SIP's, States should have already begun gathering data on those

sources. States are encouraged to submit the point source portion of the inventory to EPA as early as January 1, 1992.

States that have fully completed portions of their base year inventories for 1987, 1988, or 1989 may request EPA approval to update these portions. Otherwise, States are required to prepare a completely new inventory with a 1990 base year. The EPA guidance on the procedure to request an update was provided in May 1991 ("Procedures for the Preparation of Emission Inventories for Carbon Monoxide and Precursors of Ozone, Volume I").

In July 1991, EPA issued an updated version of MOBILE4, its mobile source emissions estimation model. The updated version MOBILE4.1, replaces and supersedes MOBILE4. States, with the exception of California, are required to use MOBILE4.1 in determining highway mobile source emissions for all of their base year emission inventories under the CAAA. California will consult with the EPA Region IX Office in determining the appropriate mobile source model to use. If other States adopt California tailpipe standards, they should consult with their EPA Regional Office to determine the appropriate mobile model because MOBILE4.1 would not correctly reflect emissions from these States in the future. However, for the base year inventory, and until new California cars are introduced into an area, MOBILE4.1 should be used. The majority of the enhancements in the revised model are internal to the model and do not require the States to make any special procedural adjustments when running MOBILE4.1. The EPA's "Emission Inventory Requirements for Ozone State Implementation Plans," should be referred to for more information. The States will also be required to develop new 1990 base year inventories for highway mobile sources to account for fleet turnover, newly opened-to-traffic highway sections resulting in changes in vehicle miles traveled (VMT) and VMT patterns, and changes in speed limits. States are to follow new guidance for estimating VMT to be published in the Federal Register notice expected to be issued in [OMS to fill in].

New methodologies have been developed to calculate emissions from certain area of off-highway mobile source categories. The categories are solvent uses, railroads, and aircraft. The emission factors for nonroad engines and vehicles have not yet been changed, but may be revised as the result of a study required by the 1990 CAAA. Therefore, for these categories, new emission estimates must be developed by the States using the new methodologies. The new methodologies for calculating emissions for solvent use are contained in the May 1991 document "Procedures for the Preparation of Emission Inventories for Carbon Monoxide and Precursors of Ozone, Volume I"; and for railroads and aircraft in the July 1991 final draft chapters of the document "Procedures for the Preparation of Emission Inventories for Carbon Monoxide and Precursors of Ozone, Volume IV." The States will be required to use these methods when preparing the area and off-highway mobile source portions of their emission inventories.

The EPA document "Procedures for Estimating and Applying Rule Effectiveness in Post-1987 Base Year Emission Inventories for Ozone and Carbon Monoxide State Implementation Plans" (June 1989) should be consulted for information on how to consider rule effectiveness when calculating emissions from stationary sources. One hundred percent rule effectiveness is the ability of a regulatory program to achieve all the emission reductions that could be achieved by full compliance with the applicable regulations at all sources at all times. For the purpose of base year inventories under the CAA, EPA will require the use of an 80-percent-effectiveness default value except as follows. The States are encouraged to derive local category-specific rule effectiveness factors, consistent with the tests and protocol prescribed in the March 31, 1988 memorandum from John S. Seitz, Director, Stationary Source Compliance Division, to Regional Air Division Directors regarding "Implementation of Rule Effectiveness Studies," or complete the questionnaire procedure for all of their source categories as prescribed in "Procedures for Estimating and Applying Rule Effectiveness in Post-1987 Base Year Emission Inventories for Ozone and Carbon Monoxide State Implementation Plans." Finally, the reader should refer to section III.A.9 on multi-State area requirements for additional information related to base year inventories.

By meeting the specific inventory requirements discussed above, the State will also satisfy the general inventory requirements of section 172(c)(3).

(3) *Other uses.* Many other inventories can be derived from the base year inventory. For example, areas may use their base year inventory as part of statewide inventories for purposes of regional modeling in transport areas. The base year inventory also plays an important role in modeling demonstrations for areas classified as moderate and above outside transport regions. Guidance has been developed to aid States in preparing emission inventories for photochemical grid modeling (for serious and above areas and multi-State moderate areas) ("Procedures for the Preparation of Emission Inventories for Carbon Monoxide and Precursors of Ozone, Vol. II," May 1991, "UAM Applications Guidance" and "User's Guide for the Urban Airshed Model, Vol. 4." The reader should also refer to the discussion of attainment demonstration requirements for serious areas (section III.A.4.(e)). Guidance on emission inventory preparation for EKMA (for nonmulti-State moderate areas) is described in "Procedures for Preparation of Emission Inventories for Carbon Monoxide and Precursors of Ozone, Volume I," May 1991.

(b) *RACT corrections.* Section 182(a)(2)(A) requires ozone nonattainment areas to submit within 6 months of classification all rules and corrections to existing VOC RACT rules that were required under the RACT provision, section 172(b)(3) of the old law (and related guidance). The EPA published a Federal Register (56 FR 54554) notice describing this provision and the success of States in meeting the correction deadline, and the readers should refer to that notice. As explained in that notice, areas that were designated nonattainment under section 107 just prior to enactment of the 1990 CAAA are the only areas affected by this requirement because they are the only areas that were then subject to the RACT requirements of section 172(b). These areas were again designated attainment on the date of enactment of the 1990 CAAA, and were then classified under section 181(a)(1) by operation of law. Thus, those areas were required to submit their RACT "fix-ups" as a SIP revision by May 15, 1991.

Newly designated nonattainment areas are not subject to the RACT "fix-ups" required by section 182(a)(2)(A) because they were not subject to section 172(b) of the old law. This is the case even if the State has already adopted rules for the area as part of statewide RACT for purposes other than meeting pre-1990 Act section 172(b). For nonattainment areas that will be expanded to contain portions that were not designated nonattainment prior to enactment, the RACT corrections are due in 6 months (by May 15, 1991) only for the original nonattainment area. However, for moderate areas, the newly designated portions of a nonattainment

area will be subject to the RACT "catch-ups." As explained below in section III.A.3., each moderate nonattainment area (including the newly designated portion) is subject to the RACT "catch-up" requirements of section 182(b)(2), which provide for SIP submittals by November 15, 1992. The RACT "fix-ups" refer to corrections States are required to make to RACT rules that are already in force and to adoption by States of rules that were required by pre-1990 Act section 172(b) to be in force. The RACT "catch-up" refers to the application of RACT for all applicable sources listed in section 182(b)(2), regardless of what was previously required. For purposes of the RACT "fix-ups" requirement, areas that were treated as rural nonattainment areas under EPA policies implementing the pre-amended Act must submit corrections only for previously required rules (Group I and II CTG sources with maximum theoretical VOC emissions greater than 100 tons per year). Other rules (Group III CTG's and non-CTG rules) will be due by November 15, 1992 as part of the catch-up for those previously designated rural nonattainment areas that are classified as moderate or above upon enactment and are not otherwise designated as rural transport areas under the new Act.

(1) *Definition of corrections.* A deficiency is any rule, or in some cases a portion of a rule, that is less stringent than RACT as that requirement was interpreted in pre-1990 Act EPA guidance (issued under sections 108 and 172(b) of the old law). The EPA provided a list of deficiencies for each area as part of the ozone SIP call letters to each State (May–June 1988 and November 1989, notification published 53 FR 34500, September 7, 1988 and 55 FR 30973, July 30, 1990). The EPA also provided States with existing guidance documents and asked them to review rules independently to determine consistency with this guidance.

(2) *Consequences of failure to make corrections.* Sections 179 (a) and (b) and 110(m) provides for the imposition of sanctions and section 110(c) provides for promulgation of a FIP if EPA finds that a State failed to make a required submittal. Under section 179(a), EPA must impose at least one of the two mandatory sanctions listed in section 179(b) 18 months after EPA makes such a finding, unless EPA finds that the State has made a complete submittal in the interim to correct the rules. The second of the two sanctions must be imposed if the deficiency has not been corrected 6 months after the first sanction is imposed. Section 110(m) also includes provisions on sanctions. The EPA will be discussing those provisions in a subsequent Federal Register notice. Refer to section IV.B. for more discussion on sanctions. Under section 110(c), EPA also must promulgate a FIP no later than 2 years after finding a failure to submit.

On October 22, 1991, EPA published a notice (56 FR 54554) finding that nine States and the District of Columbia failed to make a RACT fix-up submittal required under section 182(a)(2)(A). The EPA also plans to publish a set of model Federal VOC regulations. The EPA will use these model regulations as a starting point for Federal promulgation of regulations under section 110(c) as necessary, and will provide an opportunity for comment at that time. To the extent practicable, EPA will formulate any Federal regulations on the model regulations. Federal regulations will be promulgated if the States do not correct the regulations before the end of the 2-year period commencing from the finding.

The EPA will also use the model regulations as the basis for Federal regulations to apply where EPA disapproves any regulation that has been submitted. Finally, EPA expects States may want to use the model rules as a guideline for developing acceptable State rules.

(c) *I/M Corrections.* Section 182(a)(2)(B) requires States that contain marginal ozone nonattainment areas with existing I/M programs, or that were required to include I/M programs in their SIP's by the pre-1990 Act, to submit to EPA immediately upon (1990 CAAA) enactment of any revisions necessary to provide for a program no less stringent than that required prior to enactment or committed to in the SIP in effect at enactment, whichever is more stringent. The section also requires EPA to review, revise, update, and republish in the Federal Register within 1 year of enactment, the guidance for I/M programs required by the Act, taking into consideration the Administrator's investigations and audits of such programs. In short, ozone nonattainment areas must maintain existing I/M programs and must make corrections to those programs to meet existing I/M policy; when updated policy is published, these areas must submit revisions to address any new guidance.

More specifically, section 182(a)(2)(B) requires States to meet the basic I/M performance standard that has been in effect since 1977. This standard is based on a "model" program design consisting of a centralized program that annually tests tailpipe emissions on all light-duty vehicles, using emission standards for 1981 and later model vehicles of 1.2 percent CO and 220 parts per million hydrocarbons (HC) and a 20 percent stringency for pre-1981 vehicles. A compliance rate of 100 percent and a waiver rate of 0 percent are assumed. States must demonstrate an emission reduction for the I/M program included in the SIP that is at least as great as that produced by the "model" basic program (or the program already included in the SIP, whichever is greater), using the most current available version of EPA's mobile source emission model. The I/M programs are required in the urbanized portions, as defined by the Bureau of the Census in 1980, of the marginal nonattainment area.

The EPA expects to issue the policy for I/M programs in the near future. When published, the policy will state the date when such programs are to be implemented. The EPA intends that the policy will allow all areas ample time after publication of the policy to adopt and submit basic or enhanced I/M programs and/or I/M corrections as referenced in section 182(a)(2)(B). States that have both basic and enhanced I/M programs may opt to implement enhanced programs in all affected urbanized areas. States which are only required to implement basic programs (under section 182(a)(2)(B) or the requirements for moderate ozone nonattainment areas and certain CO nonattainment areas, as discussed later in this notice) must submit SIP revisions for I/M programs addressing any revised policy. The guidance will address the elements of the SIP revision.

As mandated by section 202(m), the Administrator will promulgate regulations requiring manufacturers to install diagnostic systems on all new light-duty vehicles and light-duty trucks. The purpose of these systems is to identify and track emission-related systems deterioration or malfunction. According to section 202(m)(3), within 2 years of EPA's promulgating regulations requiring States to do so, all States with I/M programs must amend their SIP to provide for inspection of these onboard diagnostics systems. The EPA will issue revised I/M guidance which addresses onboard diagnostic inspections.

(d) *Periodic inventory.* Section 182(a)(3)(A) requires the States to submit periodic inventories starting the third year after submission of the base year inventory required by section 182(a)(1) (i.e., November 15, 1995) and every 3 years thereafter until the area is redesignated to attainment. However, complete actual inventories will be used to demonstrate whether or not the milestone required in section 182(g) has

been achieved. These inventories must be submitted within the prescribed period following the milestone date. The EPA is recommending that States synchronize their schedules for developing the periodic inventories so that the second periodic inventory (the third inventory overall), which would be due in 1998, will actually be submitted early in 1997 (by February 13, 1997) and will address emissions in 1996. In this way, the milestone demonstration (required under section 182(g)) that is due for serious and above areas in early 1997 can be based on the periodic inventory developed by the States. Future periodic inventories then would also coincide with the subsequent milestone demonstrations rather than the later dates associated with the periodic inventory requirement. The EPA will be issuing guidance on the synchronization of the periodic inventory with the milestone compliance deadlines in the near future.

The first periodic inventory due no later than November 15, 1995 covers actual emissions for the 1993 time period. The States will be involved in significant planning activities during this time. The EPA will, in the future, provide guidance on how to integrate these emission inventory and planning activities. There could be a significant resource and effort savings effect to States that elect to accelerate the second periodic inventory so that it can also be used to demonstrate milestone attainment. Otherwise at least one additional emission inventory would be required by 1998. More information on these assessments and periodic inventories will be provided to States in guidance on emission tracking to be completed shortly.

The periodic inventory shall meet the same requirements as the base year inventory. This periodic inventory shall be based on actual emissions and shall cover VOC, NO_x, and CO emission sources. Like the base year inventory, the periodic inventory shall be based on peak ozone season temperatures, industrial activity, etc. Additional guidance is available in the "Procedures for the Preparation of Emission Inventories for Carbon Monoxide and Precursors of Ozone, Volume I," May 1991.

By meeting the specific periodic inventory requirements discussed above, States will also satisfy the general periodic inventory requirements of section 172(c)(3).

(e) *Emissions statements.* Section 182(a)(3)(B) requires States to submit a SIP revision by November 15, 1992 that requires the submission of annual statements from owners or operators of each stationary source of NO_x and VOC showing the actual emissions of NO_x or VOC. The first statements are due by November 15, 1993, and should show emissions during calendar year 1992.

Each statement shall contain a certification that the information contained in the statement is accurate to the best knowledge of the individual certifying the statement. The EPA will issue additional guidance on the form and content of the statement.

States may waive the requirement for emissions statements for classes or categories of sources that emit less than 25 tons per year of NO_x or VOC if the class or category is included in the base year and periodic inventories, and emissions are calculated using emission factors established by EPA (such as those found in EPA publication AP-42) or other methods acceptable to EPA.

The EPA believes that the emission statement can aid in the development of the periodic emission inventory, serve as the AIRS Facility Subsystem (AFS) update, and track progress for point sources greater than 25 tons/year.

(f) *NSR.* The statutory NSR permit requirements for marginal ozone nonattainment areas are generally contained in the Act under section 172(c)(5), revised section 173, and in newly enacted subpart 2 of part D. These are the minimum requirements that States must include in an approvable implementation plan. A discussion of general NSR permit requirements is contained in section III.G. of this preamble. Section 182(a)(2)(C) requires that States adopt and submit revised NSR regulations for all ozone nonattainment areas classified as marginal or above which incorporate the new provisions of the 1990 CAA, and correct existing regulations to incorporate all NSR provisions in effect immediately before the date of enactment.

(1) *Major stationary source.* For ozone nonattainment areas classified as marginal areas, the term "major stationary source" means any stationary source that emits or has the potential to emit 100 tons per year or more (see discussion in section III.A.9). Lower size thresholds apply to other area classifications and the VOC, to ozone transport areas.

(2) *Offset ratios.* For the purpose of satisfying the emissions offset reduction requirements of section 173(a)(1)(A), the emissions offset ratio is the ratio of total actual emissions reductions to total allowable emissions increases of such pollutant from the new source. For ozone nonattainment areas classified as marginal areas, the emissions offset ratio is at least 1.1 to 1. As per section 173(c)(1), the new or modified source may obtain offsets from the same source or other sources in the same nonattainment area, and in some cases from another nonattainment area if the other area has equal or higher nonattainment classification, and the emissions from the other area contribute to a violation of the ambient standard in the area where the new or modified source is locating. In addition, prior to permit issuance under section 173, the nonattainment plan provisions must demonstrate reasonable further progress (RFP) by requiring sufficient emission reductions to offset emissions increases from new or modified small (nonmajor) sources in the area.

(g) *Rural transport areas.* If an area meets the requirements discussed below and is treated by the Administrator as a rural transport area (RTA) as determined using procedures consistent with the EPA guidance "Criteria for Assessing the Role of Transport of Ozone/Precursors in Ozone Nonattainment Areas," the SIP for such area need only meet those section 182 plan and submission requirements, including NSR provisions, that apply to marginal areas. It should be noted that the NSR requirements applicable in ozone transport regions (e.g., offsets at a 1:1.15 ratio and major VOC source threshold of 50 tons per year) supersede the marginal requirements for RTA's. If, however, a State's request that an ozone nonattainment area be treated as an RTA is denied, the area will be classified according to its design value and all section 182 requirements for that classification will apply.

According to section 182(h), the Administrator's decision to treat an ozone nonattainment area as an RTA is discretionary. This discretion may be exercised only if the Administrator finds that the area neither borders on nor contains any portion of an MSA or CMSA and if VOC (and if EPA deems them relevant, NOx) emissions emanating from the area do not significantly contribute to ozone concentrations measured within or outside of the area. This showing depends upon whether ozone concentrations within or downwind of the area results from "overwhelming transport" of ozone or precursors from sources external to the area. Guidance on determination of "overwhelming transport" is found in "Criteria for Assessing the Role of Transport of Ozone/Precursors in Ozone Nonattainment Areas." A finding of no significant contribution will be based on analysis submitted to EPA by the concerned State in advance of the

required SIP. These results must reasonably implicate an upwind area as the source of the measured ozone concentrations. Also, the area must demonstrate that its emissions are not causing a nonattainment problem in its downwind area.

Any RTA that fails to meet the marginal area attainiment deadlines is subject to bump-up to the appropriate higher nonattainment status (discussed at section III.A.2.(i) of this document). However, if the area still qualifies as an RTA, although the area will be subject to the attainment date for the higher classification, it remains subject only to the submittal and implementation requirements for marginal areas. If it is found that the area no longer qualifies as an RTA, the area will be treated as the higher classified area for SIP requirements as well.

State plans for RTA's located within the interstate ozone transport regions established under section 184 must meet applicable provisions required by section 184 (b) and (c). In particular, provisions of section 184(b)(1)(B) requiring implementation of RACT with respect to all sources of VOC covered by a CTG, and the section 184(b)(2) requirements concerning implementation of vehicle refueling controls identified by the Administrator, must be implemented in a State plan covering an RTA. In addition, an RTA SIP must be revised to include whatever additional control measures are recommended under section 183(c) and whatever best available air quality monitoring and modeling techniques are identified under section 184(d). These plan revisions must be approved by the Administrator.

(h) *Reformulated gasoline "opt-in."* The Governor of any State with a marginal, moderate, serious, or severe ozone nonattainment area may apply to the Administrator to opt-in to the reformulated gasoline program established under section 211(k). Refer to section III.A.4.(o) for more discussion of the program requirements.

(i) *Bump-up provisions.* Although the primary focus of this General Preamble is on the criteria EPA will use in determining the adequacy of the many SIP submittals that are required under the 1990 CAAA, it is useful to describe the amended Act provisions regarding failures to attain or to make emission reduction milestones. The EPA believes that certain areas (in particular, marginal ozone areas) face some important issues related to the consequences of failures to attain by the applicable deadlines. The following discussion describes the basic requirements and procedures for determining and responding to failures to attain to make adequate progress and the specific implications for marginal ozone areas.

(1) *Failure to attain.* Section 181(b)(2) of the Act requires a marginal, moderate, or serious ozone nonattainment area to be reclassified to the higher of the next higher classification, or the classification associated with the area's design value at the time EPA determines that the area failed to meet the standard by the applicable attainment date. The EPA uses the term "bump-up" to describe this reclassification process. An area cannot be bumped up to the extreme classification under this provision.

The EPA must determine within 6 months after the attainment date whether an area has attained. In making this determination, EPA will use the most recently available, quality-assured air quality data covering the 3-year period up to and including the attainment date. For ozone, the average number of exceedances per year shall be used to determine whether the area has attained. For marginal ozone nonattainment areas, this means that the air quality data for the period 1991 to 1993 will be used to determine whether the area has attained by November 15, 1993. (Areas that show attainment prior to this period may be redesignated prior to November 1993 in accordance with section 107(d)(3).)

As provided in section 181(a)(5) for ozone areas, up to two 1-year extensions of the attainment date can be granted to the State if the State has met all applicable requirements, and if no more than one exceedance of the level of the NAAQS has occurred at any monitor in the year in which the area was to have attained. Because EPA will be reviewing available data to determine the attainment status, the State should submit its application for this extension as soon as the necessary air quality data are available.

If EPA determines that an area has not attained, EPA will publish a notice, and the area will be reclassified by operation of law. The Administrator may adjust the submittal dates for the requirements of the "new" classification (to "assure consistency among the required submissions" (section 182(i), but the attainment date will be the date originally specified for that classification in Table 1 of section 181(a). For example, a marginal area has an attainment date of November 15, 1993. If the area does not attain by then, the new attainment date will be November 15, 1996 (the "originial" attainment date for moderate areas at enactment) or, if its air quality would make it a higher classification, the later date associated with that classification.

States should be aware that if an area voluntarily bumps up late in its attainment period, the discretion granted by section 182(b)(1) for the Administrator to adjust schedules for implementing SIP requirements associated with the next higher classification may be seriously limited. In other words, areas that wait until the end of their attainment period before requesting to bump up after already missing implementation requirements, falling behind on their 15 percent RFP (if applicable), and experiencing continuing deterioration in air quality, are likely to have insufficient time for implementing the more stringent requirements of the next higher classification. The EPA, therefore, encourages any area that believes that it will be unable to attain by its applicable deadline, to voluntarily bump-up early enough to maximize the available time for implementing the requirements of the next higher nonattainment level. Early bump-up will help areas avoid sanctions and/or FIP implementation that could result from failure to meet SIP submittal or implementation requirements.

Although section 182(a) specifically excludes marginal areas from the contingency requirements of section 172(c)(9), marginal areas should carefully consider the benefits of contingent or advanced adoption of certain measures that could be implemented quickly should the area not attain by the 1993 date. If a marginal area fails to attain by November 15, 1993, it will become subject to the requirements for moderate areas, in particular the I/M, RACT, and 15 percent reductions requirements. These requirements would have to be met and the standard achieved by November 15, 1996, an extremely tight timeframe for these accomplishments if no prior planning and adoption actions have occurred. If the RACT rules cannot be developed and implemented and the 15 percent requirement cannot be met by November 15, 1996, the area could miss the attainment date for moderate areas and would face the even more stringent requirements for serious areas.

(2) *Special issues for marginal areas.* The retention of the moderate area attainment date for a marginal area that has been bumped up raises some important issues for marginal areas that will have difficulty attaining by the November 15, 1993 deadline. These issues become even more significant if the marginal area applies for and receives one or two of the 1-year

attainment date extensions (section 181(a)(5)).

The EPA believes that marginal areas should carefully consider the consequences of not attaining by November 15, 1993, and should take certain preliminary steps to minimize the potential of being subject to possibly unnecessary major control and planning actions. For example, according to the statutory time frames, it could be the middle of 1994 before a marginal area is bumped up to the moderate classification. If an area had not commenced any early planning and rule development activities, the area would have only 2½ years to meet all of the requirements for moderate areas (e.g., RACT rules, Stage II, 15 percent emission reduction requirement, etc.). While just making the submittals for these requirements would be difficult, it could be even more difficult for the State to implement the measures early enough to reduce emissions and have a significant impact on ozone levels by the end of 1996. As a result, the area could face the possibility of missing the 1996 attainment date for moderate areas and be bumped up again, this time to the serious classification. If the marginal area had earlier received one or two extensions (under section 181(a)(5)), the difficulty of adopting and implementing required measures before the attainment date for moderate areas would be even greater.

Given this potentially difficult situation for marginal areas, EPA strongly urges States with marginal areas that may be unable to attain by the 1993 deadline, to initiate preliminary planning and rule development activities well before that date. Furthermore, EPA proposes to require that States that request attainment date extensions for marginal areas (under section 181(a)(5)) must show in their requests that they have made a significant effort to initiate planning activities and rule development associated with the moderate classification, and that they have taken steps to begin any necessary monitoring activities to develop required information (such as ambient VOC and NO_x data) for the modeling analysis that will be required for the moderate classification. For certain control measures which would be required under the moderate classification, such as I/M, States should show that they have taken any necessary preliminary steps to ensure that the controls could be adopted and implemented quickly. For example, States should consider whether their legislative and regulatory procedures would enable these controls to be fully implemented and to achieve needed emission reductions before the attainment date for moderate areas.

Finally, EPA is considering requiring States that request attainment date extensions under section 181(a)(5) to submit their air quality data on an accelerated time schedule. This early reporting of data could help alert the State and EPA to the need to quickly begin developing and adopting the additional measures for the moderate classification. If the data in the "extension year" reveal more than one exceedance of the national standard.

(3) *Basic I/M.* In the event that a marginal ozone nonattainment area fails to attain the ozone standard by the applicable deadline or extended deadline, and is reclassified to moderate, a basic I/M program must be implemented, regardless of whether the area had an I/M program in place. The EPA intends to exercise its authority under section 182(i) to require such areas to submit a SIP meeting the basic I/M requirements within one year of the reclassification.

3. *Moderate Areas*

Moderate areas are required to meet all marginal area requirements, unless otherwise noted, as well as the following additional requirements.

(a) *Requirement for 15 percent reduction in emissions.* Section 182(b)(1) requires all ozone nonattainment areas classified moderate and above to submit by November 15, 1993, a plan revision that reflects an actual reduction in typical ozone season weekday VOC emissions of at least 15 percent during the first 6 years after enactment. The 15 percent emission reductions must be calculated from the 1990 baseline of actual emissions (adjusted per section 182(b)(1)(B)) and must account for any net growth in emission (i.e., net of growth). While section 182(b)(1) requires a reduction in VOC emissions of 15 percent, the 1990 CAAA do not require any specific numerical percentage of NO_x emission reductions prior to 1996.

The EPA's focus on typical ozone season, weekday VOC emissions—an interpretation of the requirement in section 182(b)(1)(B) for a 15 percent reduction of actual emissions during the "calendar year" of enactment—is consistent with prior EPA guidance. This guidance stems from the fact that the ozone NAAQS is an hourly standard that is generally violated during ozone-season weekdays when conditions are conducive for ozone formation. These ozone seasons are typically the summer months.

A 15 percent reduction is generally appropriate for moderate areas to attain the ozone NAAQS within the applicable timeframe. In some cases, modeling will show that less than a 15 percent reduction would be required for attainment of the standard. However, the 15 percent rate of progress requirement is intended to be the base program that all moderate and above areas must meet. This base program is necessary to ensure actual progress toward attainment in the face of uncertainties inherent with SIP planning, such as emission inventories, modeling and projection of expected control measures. Also, this base program would provide greater assurance of maintenance of the standard after attainment.

In those cases where modeling shows that reductions greater than 15 percent are necessary to attain the standard, the area will be required to achieve those additional emission reductions.

Section 182(b)(1) (B) and (D) define baseline emissions as "the total amount of actual VOC or NO_x emissions from all anthropogenic sources in the area during the calendar year of enactment," excluding the emissions that would be eliminated by FMVCP regulations promulgated by January 1, 1990, and RVP regulations promulgated by November 15, 1990, or required to be promulgated under section 211(h), which requires RVP no greater than 9.0 pounds per square inch (psi) during the high ozone season. The base year emission inventory for calendar year 1990 must be adjusted to remove the aforementioned emissions, as well as biogenic emissions and any emissions from sources outside the designated nonattainment boundary (e.g., within the 25-mile zone around the nonattainment boundaries if included in the emissions inventory). The adjusted base year inventory (i.e., baseline emissions) must contain only actual emissions occurring in the base year, 1990, within the designated nonattainment area boundaries. The baseline emissions should not include pre-enactment banked emission credits since they were not actual emissions during the calendar year of enactment.

(1) *Adjusted base year inventory calculation.* The adjusted base year inventory should be calculated in two steps. The first step consists of developing a 1990 inventory of non-mobile anthropogenic VOC emissions. The second step consists of determining the mobile portion of the inventory after the FMVCP and RVP reduction program (promulgated by the data of enactment or required by section 211(h)) are factored out.

The determination of the baseline will require the use of MOBILE4.1 to model

the effects of fleet turnover and RVP changes. For 1996, the baseline will be determined by applying the 1990 VMT to a hypothetical emission factor for 1996.

The hypothetical emission factor for the 1990 baseline in 1996 is the 1996 emission factor determined by running MOBILE4.1 using 1996 as the evaluation year and the same input parameters used to describe the FMVCP and SIP requirements in 1990, with the addition of RVP at 9 psi (or appropriate level for area). Multiplying this emission factor by the 1990 VMT results in 1990 motor vehicle baseline emissions which exclude the emissions reductions that would be eliminated in 1996 as a result of fleet turnover under the pre-enactment FMVCP and the section 211(h) RVP requirements. The 1990 motor vehicle baseline emissions for 1996 are added to the 1990 inventory of non-motor vehicle anthropogenic VOC emissions to calculate the 1990 total baseline emissions for 1996. This number is the adjusted base year inventory needed to calculate the amount of emissions reductions needed by 1996, as well as the target level of emissions in 1996.

(2) *Calculation of target level of emissions.* After the adjusted base year inventory is developed, the 1996 target level of emissions would be calculated by multiplying the adjusted base year inventory by 0.85 and then subtracting from this product the emission reductions expected to result by 1996 from corrections to RACT rules and I/M programs.

Once the 1996 target level of emissions is calculated, States must develop whatever control strategies are needed to meet that target. Some air planning agencies may be used to thinking in terms of the emissions reduction required relative to a current control strategy projection (particularly for stationary sources), rather than a target level of emissions. Projections of 1996 emissions would be used to calculate the required emissions reduction expressed on such a basis by simply taking the difference between the 1996 projection inventory (without controls applied) and the 1996 target level of emissions. However, States that choose this approach should be aware that the 1996 target level is dependent only on the 1990 emissions inventory, whereas the calculation of an emission reduction required relative to the current control strategy projection depends on the accuracy of the 1996 projection, which in turn depends on the estimate of future growth in activities. The assessment of whether an area has met the RFP requirement in 1996 will be based on whether the area is at or below the 1996 target level of emissions, and not whether the area has achieved a certain actual reduction relative to having maintained the current control strategy. The following formulas describe how to calculate the 1996 target level of emissions.

Formulas:

BE_{96} = 1990 Baseline Emissions
= 1990 Nonmotor vehicle emissions
+ (1990 VMT × hypothetical 1996 MOBILE4.1 emission factor)

TL_{96} = 1996 target level of emissions

Corrections = RACT rules and I/M program corrections

$TL_{96} = BE_{96} \times (0.85) -$ corrections

(3) *Emission factor adjustments.* Emission factors, as well as inventory calculation methodologies, are continually being improved. If emission factors or methodologies change significantly, EPA may advise the States to correct the base year emission inventory to reflect such changes. If significant changes occur in emission factors or methodologies between enactment and November 15, 1992 (due date for 15 percent demonstration), EPA may require States to make corrections to the base year emission inventory, as well as to the adjusted baseline and the 1996 target level of emissions. If, however, changes occur after the 15 percent demonstration is submitted but before November 15, 1996, then the States would not have to make corrections for purposes of reconciling attainment of the 15 percent milestone. Serious areas should also refer to the discussion on the rate of progress demonstration (section III.A.4(f)) for guidance on changes that might occur before November 15, 1994, and the impact on the post 6-year 3 percent rate of progress demonstration.

(4) *Creditable emission reductions.* In developing the 15 percent reduction control strategy required to be submitted as a SIP revision, States must keep in mind that the 1990 CAAA explicitly disallowed certain reductions from counting toward fulfilling the 15 percent reduction in emissions requirement.

All emission reductions from State or Federal programs are creditable toward the 15 percent progress requirement except for the following:

1. The FMVCP tailpipe or evaporative standards promulgated prior to 1990.

2. Federal regulations on RVP promulgated by November 15, 1990, or required under section 211(h).

3. State regulations required under section 182(a)(2)(A) submitted to correct deficiencies in existing VOC RACT regulations or previously required RACT rules.

4. State regulations required under section 182(a)(2)(B) submitted to correct deficiencies in existing I/M programs or previously required I/M programs.

However, all real/actual reductions, regardless of origin, will contribute to attainment even if they are not creditable toward the 15 percent requirement. While emission reductions resulting from required corrections to VOC RACT rules or I/M programs are not creditable toward the required 15 percent reduction, any future reductions resulting from measures not associated with the required corrections would be creditable. For example, reductions are creditable where the State revises the emission limit or changes the applicability threshold beyond the level required previously for the area in EPA guidance, and these modifications result in further emissions reductions. Other examples of creditable reductions include applying regulations to the new portions of a pre-enactment nonattainment area not previously subject to the regulations, and adopting TCM's listed in section 108(f) that are not already in the SIP. Reductions achieved through rules adopted pursuant to any new CTG are creditable only to the extent that the reductions were not required by a SIP or FIP developed under the pre-amended Act. For example, a non-CTG rule in a SIP, or required to be included in such a SIP prior to enactment, required an 81 percent reduction in VOC emissions. The SIP is then revised to include a post-enactment CTG which recommends a 90 percent reduction in VOC emissions. To the extent that a specific source achieves the 90 percent reduction, only 9 percent would be creditable. In addition, if a State was required to adopt a RACT rule for a particular source under the pre-amended Act but failed to do so, adoption of a rule for that source would be considered part of the RACT fix-ups. Therefore, any reductions achieved by such a rule would not be creditable.

Pre-enactment banked emissions reductions credits are not creditable toward the 15 percent progress requirement. However, for purposes of equity, EPA encourages States to allow sources to use such banked emissions credits for offsets and netting. When States use such banked credits for offsets and netting to the extent otherwise creditable under the part D NSR regulations, these pre-enactment emissions credits must be treated as growth. Consequently, this "growth" must be accounted for, as is the case with all other anticipated growth, in order to ensure that it does not interfere with the 15 percent rate of progress

requirement (which is "net" of growth). In addition, when such growth emissions are used as offsets, they must be applied in accordance with the offset ratio prescribed for the area of concern (e.g., 1.3 to 1 for severe areas, etc.). All pre-enactment banked credits must be included in the nonattainment areas attainment demonstration for ozone to the extent that the State expects that such credits will be used for offsets or netting prior to attainment of the ambient standards. Credits used after that date will need to be consistent with the area's plan for maintenance of the ambient standard. The EPA expects to provide additional clarification on the use of banked emissions in its NSR regulatory update package.

States can only count emissions reductions toward the 15 percent requirement if such emissions meet the creditability and reduction requirements. All creditable emission reductions must be real, permanent, and enforceable. States must keep careful records of all emissions reductions to ensure that the same reductions are not "double-counted" or, more simply, used more than one time (i.e., reductions cannot be used for offsets and to meet the 15 percent rate of progress requirement).

Many states with pre-existing nonattainment areas have already adopted rules defining RACT for most of the larger sources, including non-CTG categories. In such cases, there is considerable concern about what additional measures are needed to meet the 15 percent rate of progress requirement.

One method of achieving creditable reductions from stationary sources in such areas is to improve implementation of rules for existing regulations. This is referred to as "rule effectiveness" improvement. These improvements are subject to the same creditability constraints as are the other emissions reductions. For example, rule effectiveness improvements resulting from corrections to the existing VOC RACT rules made pursuant to section 182(a) are not creditable. Rule effectiveness improvements must reflect real emissions reductions resulting from specific implementation program improvements. Actual emissions reductions must result from improving rule effectiveness; simply improving the methods for calculating rule effectiveness is not creditable.

Rule effectiveness improvements resulting in emissions reductions must be adequately documented before being credited toward meeting the rate of progress requirement. Two methods exist for adequately documenting rule effectiveness improvements. First, a rule effectiveness test meeting EPA's protocol requirements can be performed before and after the improvement is implemented (for further information refer to the March 31, 1988 memorandum from John S. Seitz, Director Stationary Source Compliance Division, to Regional Air Division Directors, regarding "Implementation of Rule Effectiveness Studies"). For example, if rule effectiveness increases from 50 to 75 percent, then the emissions reductions associated with this improvement would be creditable. Second, if the default value of 80 percent is assumed before the improvement and an EPA protocol test is performed after the improvement, only the amount greater than 80 percent is creditable. Thus, if the EPA Protocol test indicates an 85 percent rule effectiveness, then the increase in emissions reductions associated with the improvement from 80 to 85 percent would be creditable toward meeting the VOC progress requirement. If the EPA protocol test indicates that the 80 percent default was incorrect and the rule effectiveness was actually less than 80 percent, then the emissions inventory and the 15 percent requirement must be recalculated.

The CAAA require that the 15 percent emissions reductions come from the baseline emissions. The baseline emissions are defined to be all emissions "in the area," (less required adjustments) which EPA interprets to mean emissions emanating from the designated nonattainment area. All emissions reductions must therefore come from within the designated nonattainment area. Of course, emissions reduction strategies applied to sources just outside the nonattainment area may have a beneficial effect on the nonattainment problem within the designated area.

After the control strategy is developed, the regulations needed to implement the control strategy must be developed and adopted by the State. The control strategy along with the associated regulations must be submitted to EPA by November 15, 1993. The adjusted base year inventory and the 1996 projection inventory (without control measure reduction applied) should be submitted no later than November 15, 1992.

States should be aware of the implications of late implementation of control measures. Section 182(b)(1)(A) requires that the control strategy contain provisions for such specific annual reductions as necessary to attain the standard by the applicable attainment date. If the control strategy effort for a moderate area shows that an amount greater than 15 percent of creditable reductions when combined with the noncreditable reductions is needed to attain the ozone NAAQS by November 15, 1996, the State should plan on achieving the emissions reductions as early as possible. For that matter, any moderate area should plan on implementing control measures as expeditiously as practicable, since EPA will look at air quality data for 1994–1996 to determine if a moderate area has attained the ozone NAAQS. Section 182(b)(2) requires EPA to determine within 6 months after an applicable attainment date whether the area attained the standard by that date, which will dictate the use of the most recent 3 years of air quality data prior to that date. By delaying the implementation of measures until 1996, and thus delaying the resulting emissions reductions, moderate areas may be reclassified as serious areas because emissions reductions will not be achieved early enough to affect the air quality and to attain the ozone NAAQS. In fact, any regulations required to meet the greater than 15 percent rate of progress requirement to attain the ozone NAAQS must be submitted with the control strategy by November 15, 1993, per the requirement making specific annual VOC and NO_x reductions needed to attain the NAAQS due by November 15, 1993.

A moderate nonattainment area can achieve less than the 15 percent required reductions under certain rather restrictive circumstances. The State must demonstrate that the area has an NSR program equivalent to the requirements in extreme areas (section 182(e)), except that "major source" must include any source that emits, or has the potential to emit, 5 tons/year. Additionally, all major sources (down to 5 tons per year) in the area must be required to have RACT-level controls. The plan must also include all measures that can be feasibly implemented in the area, in light of technological achievability. The term "technological achievability" refers to measures that can be successfully implemented in actual practice, not measures that merely appear feasible in a research setting, for example. The EPA will consider on an area-by-area basis what these measures may be, with no presumption beyond that specifically given in the last sentence of section 182(b)(1)(A)(ii), which states to qualify for a less than 15 percent reduction, the State must at least demonstrate that the SIP for the area includes all measures achieved in practice by sources in the same source category in nonattainment

areas of the next higher classification. The term "achieved in practice" is intended to include those measures that have been successfully implemented in one or more nonattainment area of the next higher category. The waiver for the 15 percent progress requirement does not, under section 182(e), apply to nonattainment areas classified as extreme.

All multi-State ozone nonattainment areas should refer to section (III.A.9) for further instructions on coordinating SIP revisions and on developing the attainment demonstration.

By meeting the specific 15 percent reduction requirement discussed above, the State will also satisfy the general RFP requirements of section 172(c)(2) for the time period discussed.

(b) *Attainment demonstration.* Section 182(b)(1)(A) requires a SIP for a moderate ozone nonattainment area to provide for specific annual reductions in VOC and NO_x emissions "as necessary to attain the national primary ambient air quality standard for ozone." This requirement can be met through applying EPA-approved modeling techiniques described in the current version of EPA's "Guideline on Air Quality Models (Revised)." The Urban Airshed Model, a photochemical grid model, is recommended for modeling applications involving entire urban areas. In addition, for moderate areas contained solely in one State, the empirical model, city-specific Empirical Kinetic Modeling Approach (EKMA), may be an acceptable modeling technique. The State should consult with EPA prior to selection of a modeling technique. If EKMA is used, the attainment demonstration is due by November 1993.

In other cases, a State might choose to utilize a photochemical grid model instead of EKMA. Grid modeling will generally provide a better tool for decision makers and the necessary additional time may, therefore, be justified. In such cases, States should consult with EPA on a case-by-case basis on an acceptable approach to meeting the section 182(b)(1)(A) requirement through an interim SIP submittal by November 1993 and a completed attainment demonstration by November 1994. The interim submittal would include, at a minimum, evidence that grid modeling is well under way and a commitment, with schedule, to complete the modeling and submit it as a SIP revision by November 1994. The completed attainment demonstration would include any additional controls needed for attainment. Separate attainment demonstration requirements apply to multi-State moderate areas, as described in section III.A.9.

When projecting motor vehicle emissions for the attainment demonstration, States should use the same procedures as given in EPA VMT forecasting and tracking guidance for moderate CO nonattainment areas. The use of this guidance is limited to projecting motor vehicle emissions, and the information on the reporting requirements for moderate CO areas is not applicable.

The EPA realizes that in some cases certain demonstrations will be complicated by the impact of ozone and precursor transport, and by the RFP requirements and attainment deadlines that apply to areas of different classifications. For example, a moderate area located within the transport region is still subject to the 6-year attainment deadline and to the section 182(b)(2)(A) requirement to provide annual emissions reductions in its plan to attain by the deadline. However, this area is (at least, presumptively) being affected by transport from another area(s) and is, as well, possibly affecting other areas itself. If the "other" area that are affecting air quality levels in this moderate area are classified as serious or severe, those areas will be reducing their emissions over a longer timeframe in order to attain the standard. That is, these "other" areas could still be having significant effects on the moderate area at the time when the moderate area must demonstrate attainment. This same phenomenon can also arise in areas that may be impacted by transport but are not yet in a transport region established under section 176A or section 184.

The EPA believes that these situations are somewhat analogous to the situations addressed in section 182(h) for rural transport areas and in section 182(j) for multi-State ozone nonattainment areas. Section 182(h) recognizes that the ozone problem in a rural transport area is almost entirely attributable to emissions in an upwind area. Therefore, the only requirements for the rural area are the minimal requirements specified for marginal areas, the assumption being that the controls in the upwind area will solve the problem in the rural transport area as well. In a similar way, section 182(j)(2) for multi-State nonattainment areas and section 179B for international areas recognize that an area in one State may not be able to demonstrate attainmemt if other States or area(s) in another country do not meet similar requirements under section 182. In such cases, even though the area would not be able to demonstrate attainment, the sanction provisions of section 179 shall not apply.

In the above cases, there is a recognition in the CAAA that at some point, an area being affected by emissions from another area(s) may not be able to achieve sufficient emissions reductions on its own to demonstrate attainment. In these cases the area is relieved from certain requirements in the CAAA which would require additional controls. There is no explicit recognition in the CAAA of this occurring in other situations. The EPA believes, however, that other similar situations (as discussed above) are likely to arise, and that a reasonable approach is needed to ensure equitable treatment of the areas and expeditious attainment of the standard.

In particular, there are two situations in which an area might be subject to additional emissions reductions requirements related to the demonstration of attainment. In the first situation, an area might be receiving such high levels of transport that even if it reduced its emissions dramatically (e.g., totally eliminated its own emissions), the incoming ozone and precursors would be high enough to continue to cause violations of the standard beyond the applicable attainment date. In the second situation, the area might be able to achieve additional reductions (beyond those already required under section 182). Even where those additional reductions could be achieved to demonstrate attainment, the question arises whether it is equitable to require those reductions or to allow more time for the reductions in the "upwind" area to take place. As described above, however, the statute provides no express relief for these situations. The area does have the option of requesting to be classified to the next higher classification. Thus, where the demonstration of attainment is complicated by transport between two areas of different classifications, the State is still responsible for developing and submitting demonstrations which show that the standard will be attained by the applicable date. In other words, the State must provide for sufficient emissions reductions on a schedule that will ensure attainment in its moderate area, for example, within 6 years after enactment. The EPA believes that the wording in section 182(b)(1)(A)(i) requires the State to develop a plan providing such emissions reductions.

(c) *Contingency measures.* The general requirements for nonattainment plans under section 172(c)(9) specify that each plan must contain additional measures that will take effect without

further action by the State or EPA if an area either fails to make RFP or to attain the standard by the applicable date. These provisions do not apply to marginal ozone nonattainment areas (section 182(a)). This important issue for marginal areas is discussed further under the section on bump-ups (reclassifications upon failure to attain the standard). Additional contingency provisions are included in section 182(c)(9) for serious ozone nonattainment areas and in section 187(a)(3) for CO nonattainment areas with design values above 12.7 ppm. These latter provisions are similar to the section 172(c)(9) requirements except that the focus in section 182 (ozone areas) is on meeting emissions reductions milestones (section 182(g)), and the focus in section 187 (CO areas) is on consistency between previously projected and actual or subsequently projected VMT levels, as well as failure to attain by the required deadline. These contingency measures for SIP's, as required under the CAAA, supersede the contingency requirements contained in the 1982 ozone and CO SIP guidance, 46 FR 7182 (January 21, 1981).

Ozone areas classified as moderate or above must include in their submittals, which are due by November 15, 1993 as set by EPA under section 172(b), contingency measures to be implemented if RFP is not achieved or if the standard is not attained by the applicable date. This contingency submittal date is appropriate since States must demonstrate attainment of the 15 percent milestone at this time. The 1990 CAAA do not specify how many contingency measures are needed or the magnitude of emissions reductions that must be provided by these measures. Assuming that all of the State measures may fail to produce their expected reductions, one interpretation of the CAAA is that a State would have to adopt sufficient contingency measures in this November 15, 1993 plan to make up for this entire shortfall. In other words, the State would have to adopt "double" the measures needed to satisfy the applicable emissions reduction requirements. The EPA believes that this would be an unreasonable requirement given the difficulty many States will already have in identifying and adopting sufficient measures to meet RFP and other requirements.

The EPA believes that the contingency measures should, at a minimum, ensure that an appropriate level of emissions reduction progress continues to be made if attainment of RFP is not achieved and additional planning by the State is needed. Therefore, EPA will interpret the Act to require States with moderate and above ozone nonattainment areas to include sufficient contingency measures in the November 1993 submittal so that, upon implementation of such measures, additional [2] emissions reductions of up to 3 percent of the emissions in the adjusted base year inventory [3] (or such lesser percentage that will cure the identified failure) would be achieved in the year following the year in which the failure has been identified. This "additional" reduction would ensure that progress toward attainment occurs at a rate similar to that specified under the RFP requirements for moderate areas (i.e., 3 percent per year), and that the State will achieve these reductions while conducting additional control measure development and implementation as necessary to correct the shortfall in emissions reductions or to adopt newly required measures resulting from the bump-up to a higher classification. Under this approach, the State would have 1 year to modify its SIP and take other corrective action needed to ensure that milestones are achieved and that RFP toward attainment continues. However, if a State can show that its SIP can be revised to correct any possible failure in less than 1 year, then proportionally less than 3 percent may be considered. In the case of moderate areas, contingency measures would be needed when the area fails to attain the standard by the attainment date (or, for serious and above areas, if the area fails to meet the rate-of-progress requirements for any milestone other than one falling on an attainment year, e.g., the 15 percent required by the end of 1996). If the area fails to attain, it would be bumped up to the serious classification [4] and become subject to the requirements that apply to that classification. Therefore, the contingency measures would be implemented while the State developed and adopted the new measures associated with the serious classification.

One way that contingency measures could meet this requirement is by requiring the early implementation of measures scheduled for implementation at a later date in the SIP. For example, a State could include as a contingency measure the requirements that measures which would take place in later years if the area met its RFP target or attainment deadline, would take effect earlier if the area did not meet its RFP target or attainment deadline. Within 1 year of the triggering of a contingency requiring the early implementation of control measures, the State must submit a revision to the SIP containing whatever additional measures will be needed to backfill the SIP with replacement measures to cure any eventual shortfall that would occur as the result of the early use of the contingency measure.

If EPA notifies an area that a shortfall exists, and that the shortfall is less than 3 percent, the State may choose which contingency measures in its intital (3 percent) contingency plan to implement to meet the shortfall.

The EPA believes that a 3-percent contingency will be adequate for most areas; however, there is the possibility that in some cases 3 percent may be inadequate especially if corrective action is not instituted in a timely manner prior to a milestone date.

To address this possible shortfall (i.e., more than a 3-percent shortfall), EPA will require moderate and above areas to submit both contingency measures providing for a 3-percent reduction and an enforceable commitment to submit an annual tracking program describing the degree to which it had achieved its projected annual emissions reduction (see "Tracking Plan Implementation," section III.A.3(d)). In that annual report, the State must describe what actions it will take to make up for any shortfall before the next milestone, e.g., adopt and implement additional measures (aside from the contingency measures) so as to prevent failure to meet the milestone and therefore not triggering the 3-percent contingency measures. Alternatively, the States must provide for additional contingency measures sufficient to cover the additional shortfall expected due to the milestone failure. Within 1 year from the submittal of such report, the State must submit whatever additional measures will be needed to cure this shortfall. Therefore, more than the "3 percent" of contingency measures could be available as a reserve, even though EPA would only require sufficient contingency measures to be implemented to compensate for the degree of failure. In other words, a shortfall of 2 percent would require implementation of sufficient measures to make up for the 2 percent, not the entire

[2] These emission reductions would be in addition to those that were already scheduled to occur in accordance with the plan for the area.

[3] The adjusted base year inventory is that inventory specified by the provisions under section 182(b)(1)(B).

[4] The moderate area would actually be bumped up to either of the next higher classifications (i.e., serious or severe; areas cannot be bumped up to extreme for failure to attain), if justified by the air quality levels (the design value) at the time.

3 percent (or possibly more, due to the above procedure).

Sections 172(c)(9), 182(c)(9), and 187(a)(3) specify that the contingency measures shall "take effect without further action by the State or the Administrator." The EPA interprets this requirement to be that no further rulemaking activities by the State or EPA would be needed to implement the contingency measures. The EPA recognizes that certain actions, such as notification of sources, modification of permits, etc., would probably be needed before a measure could be implemented effectively. States must show that their contingency measures can be implemented with minimal further action on their part and with no additional rulemaking actions such as public hearings or legislative review. In general, EPA will expect all actions needed to affect full implementation of the measures to occur within 60 days after EPA notifies the State of its failure.

(d) *Tracking plan implementation.* Section 182(b)(1)(A) of the Act requires States with ozone nonattainment areas classified as moderate or higher to submit plans that contain certain "specific annual reductions in emissions of volatile organic compounds and oxides of nitrogen as necessary to attain the national primary ambient air quality standard for ozone by the attainment date applicable under this Act."

Even though the 1990 CAAA contain more specifications for evaluating whether the required emissions reductions have been achieved than the Act previously did, EPA believes that additional actions are needed to assess "interim" State progress in achieving the milestones, which occur (for serious and above areas) 6 years after enactment and every 3 years thereafter (as discussed in section III.A.4.(f)). Furthermore, sections 171(1) and 172(c)(2) provide that all SIP's must require annual incremental emissions reductions as needed to attain by the applicable date.

To meet the section 182(b)(1)(A) requirements, the State plans for moderate and above ozone areas must project the annual progress (i.e., the implementation of measures with the appropriate schedules and the expected emissions reductions) that will result from their control strategies. (See discussion under section III.A.3.(a), requirement for 15 percent reduction in emissions.) These projections must be contained in the State submittal due by November 15, 1993, and must demonstrate that the area will achieve a 15 percent net reduction in VOC emissions (plus whatever additional reductions are needed to attain) by November 15, 1996.

The primary means of demonstrating rate of progress will be through the periodic inventories (i.e., complete, actual inventories) submitted every 3 years. At this time, EPA intends to rely on existing reporting requirements such as emissions statements, compliance certifications, periodic inventories, and the annual AIRS update, rather than imposing additional reporting requirements on the States.

(e) *Major stationary source definition.* For ozone nonattainment areas classified as moderate areas, the term "major stationary source," for purposes of the NSR program and (as discussed below) the RACT requirements for major non-CTG sources, means any stationary source that emits or has the potential to emit 100 tons per year or more.

(f) *RACT "catch-ups"*—(1) *Applicability.* The 1990 CAAA require moderate areas to adopt RACT standards for three types of sources or source categories. This requirement is in addition to the RACT "fix-up" requirement of section 182(a)(2)(A), discussed in section III.A.2.(b) above. The RACT catch-up requirement is meant to ensure that all moderate and above nonattainment areas, regardless of time of designation, have in place all RACT for source categories covered by the CTG's and for major sources that are not subject to a CTG. Stated differently, it requires moderate and above nonattainment areas that previously were exempt from certain (or all) RACT requirements, to "catch up" to those nonattainment areas that were subject to those requirements during that earlier period.

All States should submit negative declarations for those source categories for which they are not adopting CTG-based regulations (because they have no sources above the CTG recommended threshold) regardless of whether such negative declarations were made for an earlier State implementation plan. This is necessary since there may now be sources in the nonattainment area that previously did not exist, or in areas where the boundaries of the nonattainment area have expanded, there may be sources in the new portion of the nonattainment area which should not be overlooked.

Under the first category of requirements in section 182(b)(2) (subparagraph [A]), nonattainment areas are required to adopt RACT for all VOC sources covered by any CTG document issued by the Administrator after enactment and before the area is required to attain the standard. The EPA is required to adopt 11 CTG's before November 15, 1993 (section 183). Although EPA has not yet issued these 11 CTG's, EPA has issued a CTG document in which it lists the 11 CTG's that the Agency plans to issue in accordance with section 183, and establishes the time tables for submittal of RACT rules applicable to the sources covered by those CTG's. This document is located in appendix E.

Under the second set of RACT requirements (subparagraph [B]), the State must adopt provisions applying RACT requirements to all VOC sources covered by any CTG issued before the date of enactment of the new law, even if the CTG was not previously applicable in the area under the previous law. Under the requirements established for implementing the Act prior to the 1990 CAAA, some nonattainment areas were not required to apply RACT to all sources for which there were CTG's. These include areas that originally projected attainment by 1982 and that were not subject to a later EPA call letter for SIP revisions. These areas had to apply RACT for the source categories covered by the Group I and II CTG's that had been issued before the 1982 attainment date; however, they were not required to apply RACT to the categories covered by the Group III CTG's, which were issued after the 1982 attainment date. Thus, for example, the new law requires any nonattainment areas not previously subject to all the CTG's to "catch up" and apply RACT to all sources covered by all the CTG documents. Nonattainment areas not previously required to apply RACT to sources covered by Group III CTG's will have to do so in the SIP revisions. In addition, areas previously consider rural nonattainment areas, which had to apply RACT only to certain major sources in certain CTG categories under prior policy, will have to revise their SIP's to apply RACT to all sources, including nonmajor sources that are covered by any CTG. This requirement does not apply, however, to RTA's that satisfy section 182(h) as discussed in section III.A.2.(g).

In the third case (subparagraph [C]), States are to adopt plans that apply RACT to all other major stationary sources of VOC's in the area, even if no CTG has been issued by EPA with respect to that source. The burden falls on the State to determine individual RACT rules for each of the sources or a "catch-all" RACT rule that would cover major non-CTG sources. In the past, only certain nonattainment areas were required to adopt such "non-CTG"

RACT rules. Under subparagraph (C), all other moderate to extreme nonattainment areas must "catch up" by adopting RACT rule requirements for major non-CTG sources.

(2) *Schedule.* For sources subject to a post-enactment CTG document, States must adopt RACT rules in accordance with the schedule set forth in a post-enactment CTG document. The EPA has issued its first post-enactment CTG document, attached as Appendix E, which establishes the list of the 11 CTG's EPA plans to issue and the applicable dates for submittal of RACT rules for sources subject to a post-enactment CTG. In the CTG document, EPA has provided that States must comply with the RACT submittal time tables established in an applicable CTG. These time tables will establish RACT submittal dates and implementation dates. However, if no CTG has been issued and, therefore, no time table has been established by November 15, 1993, for one or more source categories, the State must submit RACT rules applicable to that source or source category by November 15, 1994. In such a case, those rules must provide that the source must implement those requirements by May 15, 1995.

Areas must submit RACT "catch up" rules for sources covered by a pre-enactment CTG and for major sources not subject to a pre-enactment CTG or covered by the CTG document in Appendix E in the form of a SIP revision request, within 2 years of enactment (i.e., by November 15, 1992). This submittal should also identify sources that are major but which are subject to a post-enactment CTG document. The SIP revisions must provide for the implementation of the RACT measures as expeditiously as practicable, but no later than May 31, 1995.

(3) *Interface with early reductions.* The EPA is required to promulgate maximum achievable control technology (MACT) standards under section 112 for sources which emit hazardous air pollutants (at a minimum, the 189 pollutants listed in section 112(b)(1)). These standards will be promulgated by November 15, 2000 (section 112(e)). The EPA must promulgate the first set of MACT standards by November 15, 1992. Section 112 also provides a mechanism whereby sources may elect to defer compliance with an applicable standard by achieving an early 90 percent (95 percent for particulate matter) reduction in emissions of hazardous air pollutants at specified units (section 112(i)(5)). For sources subject to the first round of MACT standards, a source can obtain the 6-year extension if it commits to make the 90 percent reduction prior to proposal of the MACT standard and actually achieves the 90 percent reduction prior to January 1, 1994. For later standards, the applicant must demonstrate that the 90 percent reduction has been achieved prior to proposal of the applicable MACT standard. Therefore, within the next few months, the sources that are affected by the first phase of MACT standards may begin to submit enforceable commitments for the early reductions program.

In some instances, a source that elects to participate in the early reductions program will also be subject to a future RACT requirement under section 182. Sources may be hesitant to participate in the early reductions program because of the uncertainty regarding future, as yet unspecified, RACT requirements. To alleviate concern about certain RACT requirements, where a source is not subject to a RACT requirement (State is not yet obligated to adopt under the CAAA) at the time it submits an early reductions plan but subsequently becomes subject to such a requirement, EPA believes that it is reasonable to consider the early reductions program in its analysis of what RACT is for that source. In other words, when the State does submit a SIP revision with new RACT requirements that would be applicable to a source that elected to participate in the early reductions program, EPA will consider the reductions made through the program as a factor in determining if the source has implemented a RACT level of control. The EPA anticipates that the fact that a source has made a 90 percent reduction in overall VOC emissions from specified emissions points will be a major consideration in establishing RACT for those emissions points.[5] This issue will be discussed in more detail in the rulemaking on the early reductions program.

As a general rule, EPA will not revisit the RACT issue once the deferment of compliance with a MACT standard has ended. In most cases, the MACT controls should be more stringent than the reductions achieved through the early reductions program. Therefore, once MACT is in place, VOC emissions should not increase.

[5] These principles are based on the assumption that a source is not reducing its hazardous air pollutants by replacing them with nonhazardous VOC's. While EPA recognizes this as a legitimate approach for reducing hazardous air pollutants, EPA would not be able to consider this type of program as a factor in establishing RACT for the source if it does not achieve any real reductions of VOC emissions.

(4) *Guidance.* Under section 183, EPA is to issue several forms of guidance that should help the States meet the requirements of section 182(b)(2). The EPA is required to issue CTG's for VOC emissions from 11 categories of stationary sources for which CTG's have not previously been issued. In addition, EPA must issue CTG's to control VOC emissions from aerospace coatings and solvents and to control emissions from paints, coatings, and solvents used in shipbuilding operations and ship repair. All of these documents are due within 3 years of enactment. The EPA must also conduct a study of VOC emissions from consumer or commercial products and submit a report to Congress not later than 3 years after enactment. Based on the study and report, EPA is required to regulate categories of consumer and commercial products within the time frame set forth in section 183(e)(3)(A).

In addition, the CAA require EPA to recommend alternative control techniques (ACT's) for all categories of stationary sources of VOC and NOx that emit or have the potential to emit 25 tons per year or more of such pollutant. These documents are also due within 3 years of enactment. While these documents will not contain presumptive RACT, they will contain much of the background information on control technologies, costs, etc., which can be used by the States in supporting RACT determinations for major non-CTG sources.

Finally, within 1 year of enactment, EPA is to issue guidance on evaluating the relative cost effectiveness of various control options for controlling emissions from existing stationary sources that contribute to nonattainment. In addition, under section 108(h), EPA is to establish a central data base to make information available concerning emissions control technology, including information from SIP's requiring permits.

(g) *Gasoline vapor recovery.* (Stage II Vapor Recovery Systems). Section 182(b)(3) mandates that States submit a revised SIP by November 15, 1992 that requires owners or operators of gasoline dispensing systems to install and operate gasoline vehicle refueling vapor recovery ("Stage II") systems in ozone nonattainment areas designated as moderate and above. Private fueling facilities (such as government and company fleet fueling facilities) as well as retailers, are subject to the Stage II requirements. Stage II is required at gasoline dispensing facilities that dispense more than 10,000 gallons of gasoline per month (or 50,000 gallons per month for the "independent small business marketers" defined under

section 324). States must require Stage II to be effective under a specified phase-in schedule of 6 months after the State adopts the required regulation for stations constructed after November 15, 1990; 1 year after the adoption date for stations dispensing at least 100,000 gallons per month, based on the 2-year period before the adoption date; and 2 years after the adoption date for all other facilities required to install controls. Also, as appropriate, EPA shall issue guidance concerning the effectiveness of Stage II systems.

Stage II systems have been installed and operated in California for over 10 years and in some other portion of the country for a shorter period. Areas with existing Stage II programs have been implementing their programs using the same approach used in California. The California Air Resources Board (CARB) has been testing and certifying systems for at least 95 percent vapor recovery using established test procedures and methods. Once a system has been certified, a station can install the same Stage II system design without needing to test for 95 percent control effectiveness. To ensure that they are properly installed and maintained, systems are tested with low-cost vapor leakage and blockage tests at installation and then subjected to periodic enforcement inspections.

The EPA intends to require all States to adopt a similar Stage II program approach. That is, States would be required to prescribe the use of Stage II systems that achieve at least 95 percent control of VOC's and that are properly installed and operated.

As an alternative to testing each station for 95 percent control effectiveness, States may require installed Stage II systems to be certified to achieve at least 95 percent either by CARB, or by using CARB test procedures and methods or equivalent test procedures and methods developed by the State and submitted as a SIP revision. In addition, States must require the installed systems to be tested for proper installation and must perform all necessary enforcement.

Supporting and background material for developing, implementing, and enforcing this type of program is provided in technical ("Technical Guidance—Stage II Vapor Recovery Systems for Control of Vehicle Refueling Emissions at Gasoline Dispensing Facilities—Volume 1," November 1991) and enforcement ("Enforcement Guidance for State II Vehicle Refueling Control Programs," December 1991) guidance that the Agency has issued. The Agency now notifies the public that this is guidance issued by the Administrator pursuant to section 182(b)(3)(A).

Additional Stage II provisions contained in section 202(a)(6) concern onboard (on-the-vehicle) vehicle refueling control standards, which are to be developed after consultation with the Secretary of Transportation regarding the safety of onboard systems. Under this section, States are not required to apply the Stage II requirements of section 182(b)(3), gasoline vapor recovery, to facilities located in moderate ozone areas if EPA promulgates onboard refueling control standards. These provisions will be addressed in a separate Federal Register notice.

(h) *Basic I/M.* Section 182(b)(4) requires moderate ozone nonattainment areas to implement basic I/M programs at least as stringent as those required in section 182(a)(2)(B) immediately upon enactment, regardless of whether an I/M program was previously required. Therefore, all moderate areas must either continue existing I/M programs and make corrections to programs required by existing policy or to programs committed to in the SIP in effect at enactment, whichever is more stringent; or develop basic I/M programs consistent with EPA guidance. These areas must also submit revisions addressing revised basic I/M program policy for new and existing programs once revised policy is published. The I/M programs are required in the urbanized area portions of the nonattainment area.

The statute requires these plans "immediately" after enactment, even though in a few cases such areas may be subject to this requirement for the first time. The EPA would normally provide at least 1 year for an area newly subject to such requirements to adopt and implement an I/M program. The EPA will use its authority under the new section 110(k)(4) to conditionally approve basic I/M programs in the case of moderate ozone areas that were newly subject to this requirement at the time of enactment, based upon the State's commitment to develop such a program within 1 year from conditional plan approval, or by the date established EPA's guidance, whichever is sooner.

The EPA will, under section 182(i), require SIP revisions to provide for a basic I/M program within 1 year in areas newly subject to basic I/M requirements in the future as a result of redesignation or reclassification to moderate ozone nonattainment. Where the boundaries of a nonattainment area are changed any time after enactment pursuant to section 107(d)(4)(A), EPA will again conditionally approve SIP revisions based upon commitments submitted promptly after designation to adopt I/M programs within 1 year of conditional plan approval, or consistent with EPA guidance, whichever is sooner in any areas newly subject to I/M requirements by virtue of the boundary change.

The EPA expects to issue the policy for I/M areas in the near future. When published, the policy for I/M programs will state the date when such programs are to be implemented. States that have both basic and enhanced I/M areas may opt to implement enhanced programs in all affected urbanized areas. States which are only required to implement basic programs must submit SIP revisions for I/M programs addressing any revised policy. The guidance will cover the elements of the SIP revision.

In the event that a moderate ozone nonattainment area fails to attain the ozone standard by the applicable deadline or extended deadline, and is reclassified to serious or worse, an inhanced I/M program must be implemented, if the population criteria (an urbanized area, as defined by the Bureau of the Census in 1980, with a population greater than 200,000) are met. The EPA will, under section 182(i), require a SIP revision to provide for an enhanced I/M program within 2 years of the reclassification. As mandated by section 202(m), the Administrator will promulgate regulations requiring manufacturers to install diagnostic systems on all new light-duty vehicles and light duty trucks. The purpose of these systems is to identify and track emission-related systems deterioration or malfunction. According to section 202(m)(3), within 2 years of EPA's promulgating regulations requiring States to do so, all States with I/M programs must amend their SIP to provide for inspection of these onboard diagnostics systems. The EPA will issue revised I/M guidance which addresses onboard diagnostic inspections.

(i) *NSR*—(1) *NSR offset ratio.* For the purpose of satisfying the emissions offset reduction requirements of section 173(a)(1)(A), the emissions offset ratio is the ratio of total actual emissions reductions to the total allowable emissions increases of such pollutant from the new source. For ozone nonattainment areas classified as moderate, the emissions offset ratio is at least 1.15 to 1.

(j) *Bump-up requirements.* As discussed in section III.A.2(i) marginal, moderate, and serious areas will be bumped up if they fail to attain. When a moderate area is bumped up to serious,

section 107(d)(4)(A)(iv) requires that the boundaries reflect the MSA/CMSA unless within 45 days the State notifies EPA of its intent to study the appropriate boundaries for that area. If a State does make such notification, a final determination of boundaries must be made by EPA within 8 months of reclassification to serious.

4. Serious Areas

Serious areas are required to meet all moderate area requirements, unless otherwise noted, as well as the following additional requirements.

(a) *Major stationary source definition.* For ozone nonattainment areas classified as serious areas, the term "major stationary source," for purposes of the NSR program and the RACT requirement for major non-CTG sources, includes any stationary source or group of sources located within a contiguous area and under common control that emits or has the potential to emit at least 50 tons per year.

(b) *RACT.* In serious areas, the same RACT requirements apply as for marginal and moderate areas. However, the major source cutoff is reduced to 50 tons per year sources. This lesser cutoff would result in the need for additional RACT rules in cases where no existing CTG applies to a source located in a serious area and emitting above 50 tons per year, or an existing CTG for the source category subject to a 50 ton per year cutoff only applies to sources above a higher cutoff. Rules for these sources would be subject to the same schedule and requirements of non-CTG RACT specified by section 182(b)(2)(C) (i.e., rules are due by November 15, 1992).

(c) *NSR*—(1) *Offset ratio.* For the purpose of satisfying the emissions offset reduction requirements of section 173(a)(1)(A), the emissions offset ratio is the ratio of total actual emissions reductions to total allowable increased emissions of such pollutant. For ozone nonattainment areas classified as serious, the emissions offset ratio is at least 1.2 to 1.

(2) *Special rules for modification.* State NSR permit requirements for major modifications must be revised in accordance with new rules for modifications under section 182(c) (6), (7), and (8) of the Act. These new rules apply to proposed emissions increases resulting from modifications of major stationary sources in serious and severe areas for ozone. As explained below, these new rules change the way in which proposed modifications must be evaluated to determine whether a major modification will occur, and establish new requirements for sources which are determined to be major modifications.

(i) De Minimis rule. New section 182(c)(6) revises the de minimis test which must be applied to any proposed emissions in a serious (or severe) area. The new de minimis rule establishes an emissions threshold of 25 tons aggregated over a 5-year period to replace the current EPA threshold of 40 tons per year. It also requires an evaluation of past net increases even when the proposed increase itself is below the de minimis level. Thus, an emissions increase resulting from a proposed modification of a major stationary source is de minimis if the net emissions increase—which is to be calculated by aggregating the proposed increase with all other creditable increases and decreases in emissions from the source from the 5 prior calendar years (including the calendar year of the proposed change)—is 25 tons or less. In a break with previous EPA policy, this provision requires this 5-year evaluation even if the proposed increase standing alone would not exceed the de minimis threshold of 25 tons. Consequently, even a small proposed increase (itself less than 25 tons) may not be de minimis and could cause the proposed change to be treated as a major modification subject to the special modification provisions described in the following two sections.

(ii) Modifications of sources emitting less than 100 tons per year. For a proposed modification that is not de minimis (according to the special de minimis rule under section 182(c)(6)), a major stationary source emitting or having the potential to emit less than 100 tons per year must satisfy special rules, delineated under new section 182(c)(7) for such modifications. Under these rules, the proposed modification is subject to the part D NSR permit requirements as a major modification unless it can offset the proposed emissions increase with greater emissions reductions at the source at an internal offset ratio of at least 1.3 to 1. Section 182(c)(7) provides that in the absence of sufficient internal offsets, the part D permit requirements of section 713 must be met, except that when applying the requirement of section 173(a)(2) to such modification, the source shall apply best available control technology (BACT), as defined in section 169 of the Act, as a substitute for the lowest achievable emissions rate (LAER). All other permit requirements of section 173(a) must be satisfied, including the requirement for an emissions offset ratio of at least 1.2 to 1.

(iii) Modifications of sources emitting 100 tons per year or more. If a proposed modification which is not de minimis would occur at a major stationary source emitting or having the potential to emit 100 tons per year or more, then rules consistent with section 182(c)(8) of the CAAA must apply. Section 182(c)(8) provides that such modification is a major modification and is subject to the part D permit requirements. However, the source may elect to offset its proposed emissions increase with a greater reduction in emissions at the source at an internal offset ratio of 1.3 to 1 in order to avoid the requirements of section 173(a)(2) concerning LAER. If the source elects not to obtain the appropriate internal offsets, then LAER will apply with respect to the major modification. In any case, all other part D permit requirements, including emissions offsets at the prescribed ratio 1.2 to 1, must be satisfied by the major modification.

(d) *Enhanced monitoring.* Section 182(c)(1) requires that all SIP's for serious ozone nonattainment areas contain a program of measures designed to enhance and improve both ambient air quality monitoring and emissions monitoring. The program for enhanced ambient air quality monitoring should contain measures for ozone, NO_x, and VOC pollutants. The program for enhanced emissions monitoring should contain measures for NO_x and VOC's. States are required to take immediate action to adopt and implement an enhanced monitoring program upon the issuance of rules to be promulgated by EPA. Upon promulgation of these rules, EPA will provide further direction as to the required actions and schedules for States.

(e) *Attainment demonstration.* Section 182(c)(2)(A) requires a SIP for a serious ozone nonattainment area to provide an attainment demonstration by November 15, 1994. The "attainment demonstration must be based on photochemical grid modeling or any other analytical method determined by the Administrator, in the Administrator's discretion, to be at least as effective" (section 182(c)(2)(A)). This requirement can be met through applying EPA-approved modeling techniques for SIP revisions (see EPA's "Guideline on Air Quality Models (Revised)," 1986). The Urban Airshed Model is recommended for modeling applications involving entire urban areas.

Serious areas generally must meet all requirements of moderate ozone nonattainment areas. As discussed above, moderate ares are required to provide for reductions in VOC and NO_x emissions "as necessary to attain the national primary ambient air quality

standard for ozone" (section 182(b)(1)(A)). To determine the "necessary" emissions reductions, an attainment demonstration is generally required by November 1993, if a photochemical grid model is not used. Serious (and higher) areas, however, must complete photochemical grid modeling analyses and have longer attainment deadlines. In consideration of the additional time necessary to gather data to support and to perform a grid modeling analysis, Congress provided an additional year for serious (and higher) areas to submit their demonstrations of attainment. In light of the fact Congress allowed this additional year, EPA believes that the section 182(c) requirement for serious and higher ozone nonattainment areas to submit photochemical grid modeling by November 1994 supersedes the attainment demonstration otherwise applicable under section 182(b).

When projecting motor vehicle emissions for the attainment and rate of progress demonstration after 1996, States should use the same procedures as given in the EPA VMT forecasting and tracking guidance for serious CO nonattainment areas. For VMT projections up through 1996, States may follow the procedures for VMT forecasting and tracking for moderate CO nonattainment areas. The use of this guidance is limited to projecting motor vehicle emissions; the information in the reporting requirements for moderate or serious CO areas is not applicable.

(f) *Rate of progress demonstration.* Section 182(c)(2)(B) requires that serious ozone nonattainment areas must submit by November 15, 1994 (4 years after enactment), a rate of progress demonstration. The plan must provide for reductions in ozone season, weekday VOC emissions of at least 3 percent per year net of growth averaged over each consecutive 3-year period beginning in 1996 until the attainment date. This is in addition to the 15 percent reduction over the first 6-year period required in areas classified as moderate and above. The baseline for the 3 percent per year rate of progress reductions and creditability requirements are the same as for the 15 percent progress requirement under section 182(b)(1). See section III.A.3.(a) above for a discussion of EPA's focus on ozone season weekday VOC emissions.

Similar to the calculations for the 15 percent requirement (see section III.A.3.(a) of this document), the State must first calculate the 1990 adjusted base year inventory.

(1) *Adjusted base year inventory calculation.* The adjusted base year inventory should be calculated in two steps. The first step consists of developing a 1990 inventory of non-mobile anthropogenic VOC emissions. The second step consists of determining the mobile portion of the inventory after the FMVCP and RVP reduction programs (promulgated by the date of enactment or required by section 211(h)) are factored out. Since the effect of the pre-enactment or current FMVCP as a cumulative reduction from 1990 levels increases each year because of fleet turnover, there will actually be a separate 1990 baseline applicable to each evaluation year specified (e.g. 1999, 2002, etc.).

The determination of the baselines will require the use of MOBILE4.1 to model the effects of fleet turnover and RVP changes. For a given evaluation year, the baseline will be determined by applying the 1990 VMT to a hypothetical emissions factor for the evaluation year. The hypothetical emissions factor for the 1990 baseline in 1999 (or 2002, 2005, etc.) is the 1999 (or 2002, 2005, etc.) emissions factor determined by running MOBILE4.1 using 1999 (or 2002, 2005, etc.) as the evaluation year and the same input parameters used to describe the FMVCP and SIP requirements in 1990, with the addition of RVP at 9 psi (or less where approporiate). Multiplying this emissions factor by the 1990 VMT results in 1990 motor vehicle baseline emissions which exclude the emissions reductions that would be eliminated in 1999 (or 2002, 2005, etc) as a result of fleet turnover under the pre-enactment FMVCP and the section 211(h) RVP requirements. The 1990 motor vehicle baseline emissions for 1999 (or 2002, 2005, etc.) are added to the 1990 inventory of non-motor vehicle anthropogenic VOC emissions to calculate the 1990 total baseline emissions for 1999 (or 2002, 2005, etc.). This number is the adjusted base year inventory needed to calculate the target level of emissions in 1999 (or 2002, 2005, etc.).

Any emissions reductions expected to result by the evaluation year (e.g., 1999, 2002, etc.) from corrections to RACT rules or I/M programs should be subtracted after the baseline has been used to calculate (according to the procedure discussed below) the target level of emissions.

The target level of emissions for a milestone year is the total amount of emissions allowed in the area in order to meet the rate of progress requirement for the year in question. The 1999 target level of emissions can be calculated from 1990 total baseline emissions for 1999 and the 1996 target level of emissions. However, an additional correction factor is needed to account for the mobile source emissions reductions that would have occurred under the pre-enactment FMVCP and section 211(h) RVP requirements between 1996 and 1999 as a result of fleet turnover (assuming that all I/M deficiencies have been fixed). This correction factor is simply the difference between the 1990 total baseline emissions for 1996 and the 1990 total baseline emissions for 1999. The 1999 target level of emissions is therefore calculated by subtracting this fleet turnover correction factor, and 9 percent of the 1990 total baseline emissions for 1999, from the 1996 target level of emissions.

In subsequent milestone years, the fleet turnover correction factor is the difference between the 1990 baseline emissions for the previous milestone year and the 1990 baseline emissions for the current milestone year. The target level is calculated by subtracting this fleet turnover correction factor and 9 percent of the 1990 total baseline emissions for the current milestone year, from the target level of emissions in the previous milestone year.

Once the target level of emissions for a milestone year is calculated, States can develop whatever control strategies are needed to meet that target. Some air planning agencies may be used to thinking in terms of the emissions reductions required relative to a current control strategy projection (particularly for stationary sources), rather than a target level of emissions. Projections of milestone year emissions would be used to calculate the required emissions reductions expressed on such a basis, by simply taking the difference between the milestone year projection inventory (without controls applied) and the milestone year target level of emissions. However, States that choose this approach should be aware that the milestone year target level is dependent only on the 1990 emissions inventory, whereas the calculation of an emissionsreduction required relative to the current control strategy projection depends on the accuracy of the milestone year projection, which in turn depends on the estimate of future growth in activities. The assessment of whether an area has met the reasonable further progress requirement in the milestone year will be based on whether the area is at or below the milestone year target level of emissions and not whether the area has achieved a certain actual emissionsreduction relative to having maintained the current control strategy.

Formulas:

BE_x = 1990 baseline emissions calculated relative to year x

x = milestone year
x = 1999, 2002, 2005, 2008
BG_9 = 9 percent emissionsreduction requirement
TL_x = target level of emissions permitted for year x
$BG_9 = BE_x \times (0.09)$
FT_x = Fleet turnover correction factor
$FT_x = BE_{x-3} - BE_x$
$TL_x = TL_{x-3} - BG_9 - FT_x$
Example: x = 1999
$TL_{99} = TL_{96} - BG_9 - FT_{99}$

For areas with attainment dates occuring in 2007 and 2010 (i.e., Severe 2 and Extreme areas, respectively), the following formulas should be used for calculating the target level of emissions for the attainment year. The final emissions reductions requirement prior to attainment for these areas is 6 percent over a 2-year period (i.e., the time between the last milestone and the attainment date is 2 years).

x = milestone year
x = 2007, 2010
BE_x = 1990 baseline emissions calculated relative to year x
BG_6 = 6% emissions reduction requirement, before growth
TL_x = target level of emissions permitted for year x
$BG_6 = BE_x \times (0.06)$
$TL^2 = TL_{x-3} - BG_6$
$FT_x = BEx - 2 - BE_x$
Example: x = 2007
$TL_{07} = TL_{05} - BG_6 - FT7$

(Note: The correction factor for RACT rule and I/M program correction is not included in these calculations because the associated emissions reductions should have been realized prior to the end of 1996. If this is not the case, an adjustment should be made as in the calculation of the target level of emissions for the first 6 years.)

As discussed in section III.A.3.(a) of this preamble, if changes in emissions factors or in methodologies for developing emissions inventories occur after the 15 percent demonstration is submitted, but before November 15, 1996, then States need not correct the base year inventory—the adjusted baseline on the projection inventory for purposes of reconciling the 15 percent demonstration. However, if such changes occur after November 15, 1991, but prior to November 15, 1994, a serious or above area may be required to make corrections to the base year inventory and attainment year projection inventory for the purposes of developing the 3 percent rate of progress demonstration. If such changes occur after November 15, 1994, EPA will advise on when it would be appropriate for the States to make corrections in future supplements to this General Preamble.

The statute explicitly states that, after 1996, emissions reductions from NOx sources can be substituted for VOC emissions reductions if the resulting reduction in ozone concentrations is at least equivalent to that which would result from VOC emissions reductions. Emissions reductions of NOxare subject to the creditability provisions under section 182(b)(1)(C) and (D). Additionally, any actual NOx emmissions reductions in excess of growth in NOx emissions during the 1990–1996 period may be used to meet post-1996 emissions reductions requirements for ozone nonattainment areas classified as serious. Like VOC reductions, these NOx reductions must be real, enforceable, permanent, net of growth, and meet the creditability requirements. In addition, the NOx reductions must meet the guidance under which NOx reductions can be substituted for VOC reductions. If an area substitutes NOx reductions for VOC reductions, then a rate of progress curve (similar to the one required for VOC) must also be developed for NOx.

Certain NOx emission reduction requirements may also be averaged consistent with EPA guidance. The CAAA encourage the use of market-based approaches in both titles I and IV. The use of economic incentives is explicitly allowed in sections 110(a)(2) and 172(c)(6) of title I. Provisions for averaging emissions of NOx over two or more units are contained in section 407(e). However, compliance with relevant titles would have to be maintained.

If the State elects to allow any pre-enactment banked emissions reductions credits to be used for purposes of new source offsets during the period between 1996 and attainment, then these emissions must be treated as growth (i.e., banked credits become emissions upon use). As such, the increase in emissions must be accounted for in order to ensure the rate of progress requirement is achieved.

States can only count emissions reductions toward the 3 percent per year requirement if such emissions meet the creditability and reduction requirements. All creditable emissions reductions must be real, permanent, and enforceable. States must keep careful records of all emissions reductions to ensure that the same reductions are not used more than one time (i.e., reductions cannot be used for offsets and to meet the rate of progress requirement). Any creditable VOC emissions reductions achieved beyond the required 15 percent during the first 6 years after enactment of the 1990 CAAA (November 15, 1990–November 15, 1996) can be counted toward meeting the 3 percent rate of progress requirement. For example, if an area achieves 20 percent creditable VOC emissions reductions during the first 6 years, then the area can apply the 5 percent surplus reductions toward the 9 percent requirement for years 1996–1999.

Actual NOx emissions reductions exceeding growth in NOx emissions since the 1990 base year may be used to meet post-1996 emissions reductions requirements for ozone nonattainment areas classified as serious and above. Section 182(c)(2)(C) grants EPA broad discretion in determining the conditions under which NOx control may be substituted for, or combined with, VOC control to maximize reduction in ozone air pollution. The EPA believes that since VOC reductions in 1990–1996 (in excess of the required progress amount of 15 percent, which in turn is net of growth) can be carried over to the post-1996 period, NOx reductions in excess of growth since 1990 (there is no progress requirement for NOx) may be carried over as well. Note that these NOx emissions reductions are subject to the substitution requirements of section 182(c)(2)(C) and to the same creditability constraints dictated by section 182(b)(1)(C) and (D) as apply to VOC emissions reductions.

Rule-effectiveness improvements are creditable during the post-1996 period. The same requirements apply as in the 15 percent reduction requirement (see section III.A.3.(a)).

All emissions reductions that are to be credited against the percent reduction requirements must come from within the designated nonattainment area. Of course, emissions reductions strategies applied to sources just outside the nonattainment area may have benficial effects on the nonattainment problem within the designated area. The CAAA require that the rate of progress emissions reductions be calculated from the baseline emissions. The baseline emissions are defined to be all emissions "in the area," which EPA interprets to mean in the designated nonattainment area.

After the control strategy is developed, regulations needed to implement the control strategy must be developed and adopted by the State. The control strategy along with the associated regulations must be submitted to EPA by November 15, 1994. The adjusted base year inventory and the attainment year projection inventory must be submitted no later than November 15, 1994; however, EPA may require an earlier draft submission of these documents to allow early review. If the attainment demonstration for a serious nonattainment area shows that an amount greater than 3 percent per

year averaged over the 3-year period of creditable reductions, when combined with the noncreditable reductions, is needed to attain the ozone NAAQS by the applicable attainment date, areas should plan on achieving the emissions reductions as early as possible. In any case, it will be to an area's advantage to implement control measures early since EPA will look at air quality data for the 3 years leading up to the attainment date (i.e., for serious areas, air quality data from years 1997–1999 will be evaluated) to determine if an area has attained the ozone NAAQS. Delaying the implementation of measures until near the attainment date may result in reclassification to the next higher category because emissions reductions would not have come in time to produce timely attainment of the ozone standard. Any regulations required to achieve the annual reductions necessary to attain the standard must be submitted with the control strategy by November 15, 1994.

A nonattainment area can achieve less than the 3 percent per year required reductions if the State can demonstrate that the plan includes all measures that can be feasibly implemented in the area, in light of technological achievability. The EPA will consider on an area-by-area basis what these measures may be, with no presumption beyond that specifically given in section 182(c)(2)(B)(ii), which states that to qualify for a less than 3 percent reduction the State must at least demonstrate that the SIP for the area includes all measures achieved in practice by sources in the same source category in nonattainment areas of the next higher classification. The 3 percent per year requirement cannot be waived for areas classified as extreme. A determination of the waiver from the 3 percent per year requirement will be reviewed at each milestone under section 182(g) and revised to reflect the availability of any new technologies or other control measures for sources in the same category.

By meeting the specific 3 percent reduction requirements discussed above, the State will also satisfy the general RFP requirements of section 172(c)(2) for the time period discussed.

All multi-State ozone nonattainment areas should refer to the multi-State section (III.A.9) for further instructions on coordination of SIP revisions and on the development of the attainment demonstration.

(g) *Milestone compliance.* Serious and above ozone areas must show that they did achieve their rate of progress emissions reductions (called milestones) in the "compliance demonstrations" required by section 182(g)(2). These demonstrations are due 90 days after each milestone was to have been achieved and shall be submitted as an areawide inventory of actual emissions. The EPA is suggesting that the States synchronize their periodic emissions inventories with their milestone compliance demonstrations (see section III.A.2. of this preamble). The EPA will provide further guidance on acceptable approaches to allow for synchronizing periodic emissions inventories and milestone demonstrations so as to meet the 90-day requirement. Consistent with the tracking provisions discussed in section III.A.3.(c), the submittals for serious and above areas due by November 15, 1994, must contain annual projections of control measure implementation and emissions reductions to occur from November 15, 1996 until the attainment date.

(h) *Bump-up requirements.* As discussed in section III.A.2.(i), marginal, moderate, and serious areas can be bumped up if they fail to attain. Section 182(g) adds additional bump-up provisions for serious and severe areas that miss a milestone. Under those provisions, such areas may elect to bump up to the next higher classification as their means of satisfying the milestone requirements (see discussion in section III.A.4.(i)). The States with serious or above ozone areas must submit compliance demonstrations within 90 days after a milestone was to have occurred, and EPA must determine within 90 days of submittal whether the States' demonstrations are adequate (section 182(g)). The milestones are essentially the emissions reductions required by section 182(b)(1) and (c)(2)(B). For example, serious ozone areas must demonstrate that they have achieved the 15 percent emissions reductions requirement of section 182(b)(1) within 90 days after such milestone should have occurred (e.g., 90 days after November 15, 1996, or February 13, 1997).

Any area newly classified as a severe ozone nonattainment area due to bump-up provisions or reclassification under section 181(b) is subject to the reformulated gasoline program under section 211(k). The effective date of such program is 1 year after reclassification.

(i) *Failure to meet a milestone (Economic Incentive Program).* Under section 182(g)(3), if a State fails to submit a milestone compliance demonstration for any serious or severe area as required by section 182(g)(2), the State shall choose from three options: To be bumped up to the next higher classification, to implement additional measures (beyond those in the contingency plan which will already be triggered and implemented) to achieve the next milestone, or to adopt an economic incentive program (as described in section 182(g)(4)). Based on the schedule in section 182(g)(3) for State election, EPA review of election, and the associated SIP revision (section 182(g)(3)), the time available to develop and implement required additional measures or an economic incentive program will be extemely limited if the State waits until a failure occurs to initiate the program of choice. Thus, EPA urges States to initiate program development as soon as they determine that a failure is likely. States are encouraged to consider inclusion of economic incentive programs where appropriate in the SIP submission due 3 or 4 years after enactment to be of use in meeting the first milestone. Submittal at that time would be more likely to allow for sufficient time to develop, implement, and evaluate the effectiveness of the program. Economic incentive programs are discussed in more detail in section III.G.3.

(j) *Enhanced I/M.* Section 182(c)(3) requires "enhanced" I/M programs in each urbanized area of serious and above ozone nonattainment areas as defined by the Bureau of Census, with 1980 populations of 200,000 or more. The section calls for EPA to establish a performance standard for I/M that programs must achieve, and also sets some minimum design requirements. The Act specifies that the State program must include, at a minimum, computerized emissionsanalyzers, on-road testing, denial of waivers for warranted vehicles or repairs related to tampering, a $450 cost waiver requirement (adjusted annually based on the Consumer Price Index) for emissions-related repairs not covered by warranty, enforcement through registration denial unless an existing program with a different mechanism can prove greater effectiveness, annual inspection unless a State can demonstrate that less frequent testing is equally effective, centralized testing unless the State can prove decentralization is equally effective, and inspection of the emissions control diagnostic system (when required by the Administrator). In addition, each State must report biennially to EPA on emissions reductions achieved by the program

In some cases, areas may have become newly subject to both basic and enhanced I/M requirements at the time of enactment, with the basic I/M requirements due shortly prior to the deadline for submission of the SIP revision providing for the enhanced I/M

program. In such cases, EPA regards enhanced I/M requirements as superseding the basic I/M requirements, and therefore will not require the submission of the basic I/M requirements discussed previously. The EPA will, under section 182(i), require SIP revisions to provide for an enhanced I/M program within 2 years in areas newly subject to this requirement in the future as a result of redesignation or reclassification to serious or worse ozone nonattainment.

The SIP's for enhanced I/M programs are due no later than November 15, 1992. In the event that EPA's enhanced I/M performance standard is not finalized soon enough to provide sufficient time for full SIP development, EPA will use its authority under section 110(k)(4) to conditionally approve SIP submittals committing to adopt enforceable enhanced I/M programs consistent with EPA's guidance. The guidance will cover the elements of a full SIP. The SIP must demonstrate that the I/M program will be operated until the area is redesignated to attainment based on EPA's approval of a section 175A maintenance plan without an enhanced I/M program.

As mandated by section 202(m), the Administrator will promulgate regulations requiring manufacturers to install diagnostic systems on all new light-duty vehicles and light-duty trucks. The purpose of these systems is to identify and track emission-related systems deterioration or malfunction. According to section 202(m)(3), within 2 years of EPA's promulgating regulations requiring them to do so, all States with I/M programs must amend their SIP to provide for inspection of these onboard diagnostics systems. The EPA will issue revised guidance which addresses onboard diagnostic inspections.

(k) *Clean-fuel vehicle program*—(1) *Schedule.* The statute contains in sections 182(c)(4) and 246 certain SIP requirements for areas classified as serious or above ozone nonattainment (based on 1987, 1988, and 1989 calendar year data) and with a 1980 population of 250,000 or more. According to these requirements, SIP provisions for implementing the clean-fuel vehicle program for centrally fueled fleet vehicles prescribed in title II, part C, must be submitted to EPA by May 15, 1994. Areas with a 1980 population of 250,000 or more that are reclassified at some future date as serious or above ozone nonattainment areas must also submit such revisions within 1 year of classification. The Administrator may adjust the compliance deadlines for newly classified areas where compliance with the deadlines would be infeasible.

(2) *Clean-fuel fleet program.* The programs must require a specified percentage of certain fleet vehicles purchased in model year 1998 and thereafter to be clean-fuel vehicles and use clean alternative fuels when operating in the area. For light-duty vehicles and light-duty trucks, the required percentage must be 30 percent in 1998, 50 percent in 1999, and 70 percent in 2000 and thereafter. For heavy-duty trucks, the percentage must be 50 percent in each such year. Light-duty vehicles and light-duty trucks in fleets participating in this program for the above model years must meet the low emissions vehicle (LEV) standards for model year 2001. Fleet phase-in requirements for light-duty vehicles and light-duty trucks (6,000 pounds Gross Vehicle Weight Rating [GVWR] or less) depend on the availability of qualifying vehicles in California by 1998 to 2000. If such vehicles are not available in California in advance of model year 2001, the phase-in schedules for these vehicles will be delayed accordingly.

Some of the major program requirements include: Requirements for fuel providers to make clean alternative fuel available to fleet operators; coverage of Federal fleets (except for certain vehicles certified by the Secretary of Defense as needing an exemption based on national security grounds); provisions for issuing credits, consistent with EPA regulations due 1 year from enactment, for purchasing more vehicles than required or vehicles that meet more stringent standards or for purchasing vehicles prior to the effective date of the program. Such credits may be banked and traded within the same nonattainment area; credits may not be traded between light-duty and heavy-duty vehicle classes.

The Administrator will promulgate rules under section 246(h) to ensure that certain TCM's that restrict vehicle usage based on time-of-day or day-of-week consideration will not apply to any vehicles that comply with the fleet program requirements, notwithstanding the relevant provisions of title I.

Additional information on the requirements for clean-fuel vehicle fleet programs for serious CO nonattainment areas is found in clean-fuel vehicle fleet program, section III.B.3.(c).

(3) *Substitutes for the clean-fuel program.* Each State subject to the fleet program may submit a SIP revision by November 15, 1992, consisting of fully adopted control measures as a substitute for all or a portion of the clean-fuel vehicle program required by section 246. The substitute measures must demonstrate to the satisfaction of the Administrator that the long-term reductions in air emissions of ozone precursors and toxic substances are, at a minimum, equal to those that would be achieved under the clean-fuel vehicle program, or a percentage thereof which would be attributed to the portion of the program for which the revision is to substitute. Substitute measures may not include any measures otherwise required by the Act; however, they would count toward the rate of reduction requirements (i.e., 15 percent).

(l) *California Pilot Test Program.* By November 15, 1992, California must submit a SIP revision requiring that sufficient clean alternative fuel be produced and distributed in California to support the title II, part C, section 249(c) mandatory clean-fuel vehicle pilot program, which begins in model year 1996. Sufficient fuel to allow all vehicles required under the program to operate exclusively, to the maximum extent practicable, on clean alternative fuel while operating in California (section 249(c)) must be available. The revision must require an adequate number of supply locations that are sufficiently distributed to ensure convenient refueling of such vehicles. The revision must apply to all classifications of nonattainment areas as well as to attainment areas within California.

Although EPA, in its April 1991 report on "Getting Started on title I," indicated that California could opt out of the California pilot program, EPA now believes that such a procedure is not contemplated under section 182(c)(4)(B), which provides for opt out of clean fuel vehicle programs in certain circumstances. That is because the part of the California pilot program under which vehicle manufacturers will be required to produce and sell clean-fuel vehicles is a mandatory Federal program administered by EPA; unlike the clean-fuel fleet program, it is not a SIP-based program that depends on the existence of SIP revisions for its implementation. Moreover, while California is to implement the fuel availability aspects of the program through SIP revisions, it would deprive the Federal program of its effectiveness if California could opt out of the fuel availability aspects of the program. The clean-fuel vehicles required under the program would not be assured of having the necessary fuels on which to operate. The conclusion that California should not be able to opt out of the fuel availability aspects of the pilot program is buttressed by section 249(c)(2)(F), which requires EPA to establish Federal

fuel availability requirements for California under its section 110(c) FIP authority, if California fails to submit a SIP revision that satifies the fuel availability requirements of section 249(c)(2).

Section 249(f) provides that any serious, severe, or extreme ozone nonattainment area outside of California may opt in to the pilot program by submitting a SIP revision to EPA that provides incentives for selling or using the clean-fuel vehicles and clean alternative fuels as mandated in the California program. Such revisions must comply with EPA regulations to be promulgated within 2 years of enactment and may not take effect until 1 year after a State has notified vehicle manufacturers and fuel suppliers of such requirements.

The incentives may include a registration fee on non-clean fuel vehicles, provisions to exempt clean fuel vehicles from certain TCM's, or preferential parking provisions for clean-fuel vehicles. The revisions may not include any production or sales mandates for clean-fuel vehicles or clean alternative fuels and may not provide sanctions or penalties for failure to produce or sell such vehicles or fuels. The incentives may not apply to fleet vehicles covered by the clean-fuel vehicle fleet program.

(m) *Gasoline vapor recovery.* The Administrator may by rule revise or waive the section 182(b)(3) requirements for stationary source gasoline vapor recovery for serious, severe, or extreme areas, if the Administrator determines that onboard emissions control systems are in widespread use throughout the motor vehicle fleet. The EPA will address this provision in a separate Federal Register notice concerning section 202(a)(6).

(n) *Transportation controls.* Section 182(c)(5) requires that beginning 6 years after enactment and at 3-year intervals thereafter, serious areas must submit a demonstration of whether current aggregate vehicle mileage, aggregate vehicle emissions, congestion levels, and other relevant parameters are consistent with those used for the area's demonstration of attainment. If the levels projected in the attainment demonstration are in fact exceeded, the State has 18 months to develop and submit a revision of the applicable implementation plan. This plan must include a TCM program consisting of measures from, but not limited to, section 108(f) that, in combination with other mobile source measures, will reduce emissions to levels that are consistent with emissions levels projected in the attainment demonstration. Areas could alternatively submit a new attainment demonstration accounting for the increased vehicle emissions projections. The EPA will release an update of "Transportation—Air Quality Planning Guidelines" in June 1992 and several TCM information documents which will address the section 108(f) measures.

It is important to note that nonattainment areas are not locked into the estimates of future emissions given in the initial SIP submittal. At any time before an area reaches attainment, the State can amend the area's SIP to get a greater reduction from nonvehicle sources. This change would have the effect of increasing the motor vehicle emissions allowed at the next milestone date.

(o) *Reformulated gasoline for conventional vehicles.* The EPA expects to promulgate regulations this year prohibiting the sale of gasoline that has not been reformulated to be less polluting ("conventional gasoline"). Under section 211(k)(10)(D), the prohibition is to apply in the nine areas having the highest ozone design value during the 1987–1989 period and with 1980 populations over 250,000, and within 1 year, to any area reclassified as a severe ozone nonattainment area. The effective date for the prohibition against the sale of conventional gasoline in these nonattainment areas in January 1, 1995.

The prohibition may be extended to any marginal, moderate, serious, or severe ozone nonattainment area at the request of the Governor of the State in which the area is located. Upon receiving a Governor's application, the Administrator will apply the prohibitions set forth in section 211(k)(5) against the sale or dispensing of conventional gasoline in the "opt-in" area effective no later than January 1, 1995, or 1 year after the application is received, whichever is later. The effective date of the prohibition in the opt-in area may be extended by 1 year up to three times by the Administrator if he finds that there is insufficient domestic capacity to produce enough reformulated gasoline for all areas in which conventional gasoline is to be prohibited. The Administrator must make such extensions for areas with lower classifications before making them for areas with higher classifications.

(p) *Contingency provisions.* For serious areas as required by sections 172(c)(9) and 182(c)(9), the contingency measures could be additional measures not already adopted to meet the RFP or other requirements, or the accelerated implementation of measures already planned to meet a future milestone (see section III.A.3.(c) for additional discussion of contingency measures). In the second case, the State would have to adopt additional measures to backfill the SIP with replacement measures to replace those that were previously used as early-implementation contingency measures, and to assure the continuing adequacy of the contingency program.

The contingency measures for serious and above ozone nonattainment areas are required by section 182(c)(9) to be adequate to correct any shortfall in meeting an emissions reductions milestone (e.g., the 3 percent reduction required by late 1999).[6] This requirement presents the problem mentioned above as to the moderate area contingency requirement (it is difficult to predict how much shortfall an area will face at a milestone and hence how much extra reduction its contingency measures should provide for, and it would be unreasonable to require the State to submit contingency measures adequate to address a hypothetical 100 percent shortfall—i.e., submit contingency measures that essentially double what the basic progress demonstration provides). The solution to the problem of setting the appropriate level of contingency measures described in section III.A.3.(c) (as to contingency measures for areas subject to the 15 percent reduction requirement) would also apply to serious and above areas preparing contingency measures as to post-1996 emissions-reductions milestones.

(q) *Long-term measures.* The EPA recognizes that some serious ozone nonattainment areas (and perhaps areas with long-term attainment dates for other pollutants) will have such large emissions reduction requirements that identifying, developing, and adopting in final form the control measures that represent the areas preferred strategy for their demonstrations of attainment may present an unreasonable burden. The EPA believes that these areas may need additional time to fully develop and adopt certain "long-term" measures that would be the preferred means to reach attainment. These measures would include those that require complex analyses and decisionmaking and coordination among a number of government agencies.

The EPA intends to allow these areas reasonable additional time to complete

[6] If the strategy for an area relies on NO_x substitution in lieu of or in addition to VOC reductions, the State should also submit NO_x contingency measures as necessary to meet the 3 percent requirement.

full development and adoption under the following conditions:

(1) The plan containing the demonstration of attainment must identify each measure for which additional time would be needed for full development and adoption.

(2) The plan must show that the long-term measures cannot be fully developed and adopted by the submittal date for the attainment demonstration.

(3) The plan must contain an enforceable commitment by the relevant agency that development and adoption will occur on an expeditious schedule to achieve specified emissions reductions from each long-term measure for each year through the attainment year.

(4) The plan must contain "backstop" measures that would be implemented to achieve equivalent emissions reductions unless the long-term measure is adopted on schedule.

(5) The long-term measures must not be needed to meet any emissions reduction requirement during the first 6 years after enactment.

The "backstop" measures required under condition #4 must be submitted with the 1994 attainment demonstration in fully adopted form. The "backstop" measures must be designed to go into effect automatically on a schedule sufficient to achieve all of the reductions identified with each long-term measure for each year through the attainment year. The "backstop" measures may represent broad, across-the-board reductions in emissions, rather than thoroughly analyzed and developed control measures. For this reason, EPA does not anticipate the actual implementation of "backstop" measures in most cases as States will have ample opportunity to submit SIP revisions incorporating the fully developed long-term measures and deleting the "backstop" measures from the SIP. Additionally, if a long-term measure cannot be developed, then that State has the option to submit a SIP revision identifying a fully developed and adopted alternative measure to replace the original long-term measure prior to any necessary implementation of "backstop" measures.

Thus, a State may find that progress can be achieved with measures that are fully developed by the 1994 SIP submittal date. However, the State may determine that expeditious attainment of the NAAQS is impossible unless the SIP also includes measures which cannot be fully developed until after the 1994 SIP is due. In its 1994 SIP submittal, the State must clearly describe each of these long-term measures and show that each measure cannot be fully developed and adopted until a specified future date, despite expeditious implementation efforts. The 1994 SIP must include with each long-term measure an enforceable schedule binding responsible agencies to achieve identified emissions reductions from each measure.

Along with these provisions, the State's 1994 SIP submittal must include "backstop" measures. The "backstop" measures must be fully adopted and scheduled for implementation to achieve reductions equivalent to those assigned each year by the long-term measures. When each long-term measure is fully developed, it must be submitted to EPA as a SIP amendment. This amendment would also propose deletion of the associated "backstops." The EPA's approval of the long-term measures would also rescind from the SIP the "backstop" measures.

5. Severe Areas

Severe areas are required to meet all *serious area requirements* [1], unless otherwise noted, as well as the following additional requirements.

(a) *Major stationary source definition.* For ozone nonattainment areas classified as severe, the terms "major source" and "major stationary source," for purposes of the NSR program and the RACT requirement for major non-CTG sources, include any stationary source, or group of sources, located within a contiguous area and under common control that emits or has the potential to emit at least 25 tons per year.

(b) *RACT.* Section 182(d) requires that the same RACT requirements apply to severe areas as apply to serious areas. Moreover, as in serious areas, the lower applicability cutoff for major non-CTG sources would result in the need for additional non-CTG RACT rules in cases where no existing CTG applies to a source in the area emitting 25 tons per year, or an existing CTG for the source category subject to a 25-tons-per-year cutoff applies only to sources above a higher cutoff. Rules for these sources would be subject to the same schedule and requirements of non-CTG RACT specified by section 182(b)(2)(C) (i.e., rules are due by November 15, 1992 for major sources not covered by an existing or expected CTG).

(c) *NSR*—(1) *Offset ratio.* For the purpose of satisfying the emissions offset reduction requirements of section 173(a)(1)(A), the emissions offset ratio is the ratio of total actual emissions reductions to total allowable increased emissions from the new or modified source. For severe ozone nonattainment areas, the emissions offset ratio is at least 1.3 to 1 unless the SIP requires all existing major sources in the nonattainment area to use BACT, as defined in section 169(3). In this case, the ratio shall be at least 1.2 to 1.

(d) *TCM's to offset growth in emissions from growth in VMT.* Section 182(d)(1)(A), VMT, applies to severe ozone nonattainment areas. This section requires that States submit revisions to their SIP's by November 15, 1992 that identify and adopt "specific and enforceable transportation control strategies and TCM's to offset any growth in emissions from growth in VMT and numbers of vehicle trips" and to achieve reductions in mobile source emissions as necessary in conjunction with other measures to comply with the periodic emissions reduction and attainment requirements of the CAAA. When projecting motor vehicle emissions for this SIP revision, States should use the same procedures as given in EPA's "Section 187 VMT Forecasting and Tracking Guidance" for serious CO nonattainment areas which will be published separately. The use of this guidance is limited to projecting motor vehicle emissions; the information on the reporting requirements for serious CO areas is not applicable.

The TCM offset provisions apply only to emissions of VOC's. In developing their progress and attainment strategies, however, States may wish to adopt similar offset goals for NO_x emissions from mobile sources, in cases where NO_x reductions are beneficial to attainment.

Section 182(d)(1)(A) also requires States to choose and implement such measures as are specified in section 108(f), to the extent needed to demonstrate attainment. In selecting the measures, Congress directed that States "should ensure adequate access to downtown, other commercial, and residential areas and should avoid measures that increase or relocate emissions and congestion rather than reduce them." In order to avoid future SIP deficiencies, findings of nonimplementation, and mandatory sanctions, EPA encourages States to select realistic TCM's. As part of this effort, States should establish aggregate targets for implementation where the TCM involves actions by numerous local jurisdictions unless the State has obtained, in advance, binding implementation commitments from all responsible jurisdictions.

The EPA interprets this provision to require that sufficient measures be adopted so that projected motor vehicle

[1] See discussion under section III.A.3.f ("RFP Demonstration," Serious Areas) regarding the adoption of long-term measures in severe areas.

VOC emissions will never be higher during the ozone season in one year that during the ozone season in the year before. When growth in VMT and vehicle trips would otherwise cause a motor vehicle emissions upturn, this upturn must be prevented. The emissions level at the point of upturn becomes a ceiling on motor vehicle emissions. This requirement applies to projected emissions in the years between the submission of the SIP revision and the attainment deadline and is above and beyond the separate requirements for the RFP and the attainment demonstrations. Which requirements will be more constraining in an area may vary with time, with the area's mix of sources, and with control measures adopted for other sources. Reductions from any discretionary measures adopted to satisfy this provision are creditable to the RFP requirements.

While the above requirement is simple in concept, its application could encourage areas to delay VMT or emissions reduction measures suitable for use as offsets until the trend in motor vehicle emissions reaches its minimum point and is about to turn upwards. This incentive for delay would exist because earlier implementation would bring the trend to a lower minimum, but would not change the date when the trend line began to increase. Later implementation would, however, delay the date when the trend line would increase. To implement the VMT offset provision while avoiding this counterproductive incentive for delay, EPA has developed the approach described below.

If projected total motor vehicle emissions during the ozone season in one year are not higher than during the ozone season the year before, given the control measures in the SIP, the VMT offset requirement is satisfied. However, if the State plans to implement control measures over and above those specifically required by the Act and those required to demonstrate RFP and attainment earlier than would be necessary and sufficient to prevent an emissions upturn, a projected subsequent growth-related increase to the level of emissions that would occur if these measures were scheduled later will not be considered to violate the requirement to offset emissions increases due to growth in VMT or vehicle trips. The latter situation should be viewed as a temporary reduction in emissions to a level below that required by the provision rather than an increase above the required level, with no effect on emissions at or after the point at which offsetting measures become essential to compliance.

The EPA will approve a SIP revision as meeting this provision despite a forecasted upturn in vehicle emissions, as long as motor vehicle VOC emissions in the ozone season of a given year do not exceed a ceiling level which reflects a hypothetical strategy of implementing otherwise specifically required measures on schedule and saving offset measures until the point at which VMT growth would otherwise cause an emission upturn. The ceiling level is therefore defined (up to the point of upturn) as motor vehicle emissions that would occur in the ozone season of that year, with VMT growth, if all measures for that area in that year were implemented as required by the Act. When this curve begins to turn up due to growth in VMT or vehicle trips, the ceiling becomes a fixed value. The ceiling line would include the effects of Federal measures such as new motor vehicle standards, Phase II RVP controls, and reformulated gasoline, as well as Clean Air Act-mandated SIP requirements such as enhanced I/M, the fleet clean-fuel vehicle program, and the employer trip reduction program. The ceiling line would also include the effect of forecasted growth in VMT and vehicle trips in the absence of new discretionary measures to reduce them. The ceiling line must, in combination with projected emissions from nonvehicle sources, satisfy the RFP requirements for the area. Any VMT reduction measures or other actions to reduce motor vehicle emissions adopted since November 15, 1990 and not specifically required for the area by another provision of the Act would not be included in the calculation of the ceiling line.

Forecasted motor vehicle emissions must be held at or below the minimum level of the ceiling line after the ceiling line reaches its minimum level. If an area implements offset measures early, the forecasted emissions will be less than the ceiling line, and forecasted motor vehicle emissions could increase from one year to the next, as long as forecasted emissions never exceed the ceiling line.

The EPA has received comment indicating that section 182(d)(1)(A) should be interpreted to require areas to offset any growth in VMT above 1990 levels, rather than offsetting VMT growth only when such growth leads to actual emissions increases. Under this approach, areas would have to offset VMT growth even while vehicle emissions are declining. Proponents of this interpretation cite language in the House Committee Report which appears to support the interpretation. The report states that "(t)he baseline for determining whether there has been growth in emissions due to increased VMT is the level of vehicle emissions that would occur if VMT held constant in the area." (H.R. No. 101–490, part 1, 101st Cong. 2d Sess., at 242.)

Although the statutory language could be read to require offsetting of any VMT growth, EPA believes that the language can also be read so that only actual emissions increases resulting from VMT growth need to be offset. The statute by its own terms requires offsetting of "any growth in emissions from growth in VMT." It is reasonable to interpret this language as requiring that VMT growth must be offset only where such growth results in emissions increases from the motor vehicle fleet in the area.

While it is true that the language of the H.R. 101–490 appears to support the alternative interpretation of the statutory language, such an alternative interpretation would have drastic implications for many of the areas subject to this provision. Since VMT is growing at rates as high as 4 percent per year in some cities such as Los Angeles, these cities would have to impose draconian TCM's such as mandatory no-drive restrictions, to fully offset the effects of increasing VMT if the areas where forced to ignore the beneficial impacts of all vehicle tailpipe and alternative fuel controls.

Although the original authors of the provision and H.R. 101–490 may in fact have intended this result, EPA does not believe the Congress as a whole, or even the full House of Representatives, believed at the time it voted to pass the CAAA that the words of this provision would impose such severe restrictions. There is no further legislative history on this aspect of the provision: it was not discussed at all by any member of the Congress during subsequent legislative debate and adoption.

Given the susceptibility of the statutory language to these two alternative interpretations, EPA believes that it is the Agency's role in administering the statute to take the interpretation most reasonable in light of the practical implications of such interpretation, taking into consideration the purposes and intent of the statutory scheme as a whole. In the context of the intricate planning requirements Congress established in title I to bring areas towards attainment of the ozone standard, and in light of the absence of any discussion of this aspect of the VMT offset provision by the Congress as a whole (either in floor debate or in the

Conference Report), EPA concludes that the appropriate interpretation of section 182(d)(1)(A) requires offseting VMT growth only when such growth would result in actual emissions increases.

Section 182(d)(1)(A) requires that specific, enforceable measures selected by the State be submitted by November 15, 1992, along with a demonstration that they are adequate to hold vehicle emissions within the ceiling described above. It also states that these measures, beyond offsetting growth in emissions, shall be sufficient to allow total area emissions to comply with the RFP and attainment requirements. These requirements create a timing problem of which Congress was perhaps not fully aware. Ozone nonattainment areas affected by this provision are not otherwise required to submit a SIP demonstration which predicts attainment of the 1996 RFP milestone until November 15, 1993, and likewise are not required to demonstrate post-1996 RFP and attainment until November 15, 1994. The EPA does not believe that Congress intended the offset growth provision to advance the dates for these broader submissions. Even without the requirement that the offset growth measures be sufficient to allow overall RFP and attainment in conjunction with other measures, EPA believes that the November 15, 1992 date would not allow sufficient time to develop a set of measures that would comply with the offset growth provision over the long term.

To deal with this timing problem so as to allow a more coordinated and comprehensive planning process, EPA will accept committal SIP revisions for the offset growth requirement under the authority of section 110(k)(4). This will allow States 1 year from EPA conditional approval of the committal revision to submit the full revision containing sufficient measures in specific and enforceable form. This may not stretch the effective deadline for the full revision dealing with the post-1996 period all the way to November 15, 1994. The affected States may need to submit their post-1996 RFP and attainment demonstrations somewhat earlier than nominally required by the provisions establishing the requirements for those demonstrations, so that EPA can assess the adequacy of the growth-offsetting measures against all three criteria specified by the 1990 CAAA. With the extra time allowed through the use of a committal SIP revision, States should be able to use procedures for projecting VMT as given in EPA forecasting and tracking guidance for serious CO areas.

(e) *Employer trip reduction program.* Section 182(d)(1)(B) requires that States with severe and extreme ozone nonattainment areas shall submit a SIP revision requiring employers with 100 or more employees in such areas to implement programs to reduce work-related vehicle trips and miles traveled by employees. Guidance on the implementation of the employee trip reduction program will be provided in a supplement to this general preamble.

6. Extreme Areas

Extreme areas are required to meet all severe area requirements, unless otherwise noted, as well as the following additional requirements.

(a) *Major stationary source definition.* For ozone nonattainment areas classified as extreme, the terms major source and major stationary source, for purposes of the NSR program and the RACT requirement for major non-CTG sources, include any stationary source, or group of sources, located within a contiguous area and under common control that emits or has the potential to emit at least 10 tons per year.

(b) *RACT.* Section 182(e) governs extreme areas. In these areas, the same RACT requirements apply as for the severe ozone nonattainment areas. However, the major source cutoff for non-CTG sources is reduced to 10 tons per year. As in the other areas, this lesser cutoff could result in the need for additional non-CTG RACT rules in cases where no existing CTG applies to a source in the area emitting above 10 tons per year, or an existing CTG for the source category subject to a 10-ton-per-year cutoff applies only to sources above a higher cutoff. Rules for these sources would be subject to the same schedule and requirements of non-CTG RACT specified by section 182(b)(2)(c) (i.e., rules are due by November 15, 1992 for major sources not covered by a new or expected CTG).

(c) *NSR*— (1) *Offset ratio.* For the purpose of satisfying the emissions offset reduction requirements of section 173(1)(A), the emissions offset ratio is the ratio of total actual emissions reductions to total increased allowable emissions of such pollutant(s) from the new or modified source. For an extreme ozone nonattainment area, the emissions offset ratio is at least 1.5 to 1, unless the State requires all existing major sources in the nonattainment area to use BACT as defined in section 169(3), in which case the emissions offset ratio shall be at least 1.2 to 1.

(2) *Special NSR rules.* For the purposes of determining the applicability of the NSR permit requirements under section 173(a), the de minimis rule in section 182(c)(6) and the special rules in section 182(c) (7) and (8), as discussed above for serious and severe areas, do not apply in extreme ozone nonattainment areas.

(3) *Modifications in extreme areas.* For modifications of major stationary sources located in extreme areas, the 1990 CAAA eliminate the concept of de minimis altogether for the purposes of determining a major modification. New section 182(e)(2) provides that any physical change of, or change in the method of operation, at the source that results in any increase in emissions from any discrete operation, unit, or other pollutant-emitting activity at the source generally must be considered a modification subject to the part D NSR permit requirements.

Section 182(e)(2) does, however, provide for an exemption from section 173(a)(1) offset requirements if the owner or operator of the major stationary source agrees to offset any proposed increase by a greater amount of onsite reduction in emissions from other discrete operations, units, or activities at an internal offset ratio of 1.3 to 1. In addition, this new section stipulates that the offset requirements do not apply in extreme areas if the modification consists of installing equipment required to comply with the applicable implementation plan, permit, or the Act itself.

(d) *Clean fuels for boilers.* Section 182(e)(3), "Use of Clean Fuels or Advanced Control Technology," applies to certain boilers in extreme ozone nonattainment areas. The State is required to submit a SIP revision by November 15, 1993 that requires affected boilers to use either clean fuels or advanced control technology by November 15, 1998. Affected boilers are individual new, modified, or existing electric utility, industrial, or commercial/institutional boilers that emit more than 25 tons per year of NO_x. The Act specifies, for purposes of this section, that clean fuels are "natural gas, methanol, or ethanol (or a comparably low polluting fuel)," advanced control technology generally means "catalytic control technology or other comparably effective control methods," and the clean fuel must be "used 90 percent or more of the operating time."

A boiler should generally be considered as any combustion equipment used to produce steam. This would generally not include a process heater that transfers heat from combustion gases to process streams, a waste heat recovery boiler that is used to recover sensible heat from the exhaust of process equipment such as a

combustion turbine, or a recovery furnace that is used to recover process chemicals. Boilers used primarily for residential space and/or water heating are not affected by this section.

Only boilers that actually emit more than 25 tons per year of NO_x are affected. Emissions vary from year to year, however, making applicability difficult to determine. Boilers with rated heat inputs of greater than 10–20 million Btu generally have the potential to exceed the 25-tons-per-year limit depending on the fuel type. A source with these high rated heat inputs should therefore be considered affected unless its federally enforceable permit specifically restricts NO_x emissions below 25 tons per year from each boiler. Boilers with rated heat inputs less than 10 million Btu which are coal-fired and less than 15 million Btu which are oil-or gas-fired, may be considered de minimis and exempt from these requirements since it is unlikely that they will exceed the emissions limit, and those few that do will emit very little in the aggregate. The State is free to impose more stringent requirements.

(e) *TCM's during heavy traffic hours.* Section 182(e)(4) (in Title I) authorizes the SIP's for extreme areas to contain provisions establishing TCM's applicable during periods of heavy traffic that reduce the use of high polluting or heavy-duty vehicles. The section states that this authority is granted notwithstanding any other provision of law.

In contrast, section 246(h) requires the Administrator to promulgate regulations to ensure that certain TCM's including time-of-day or day-of-week restrictions and similar measures that restrict vehicle usage, do not apply to any clean-fuel vehicles that meet the requirements of the title II clean-fuel vehicle fleet program. That section states that it applies notwithstanding title I.

The EPA believes that these two provisions can be harmonized by interpreting section 246(h) as allowing only regulations that impose traffic controls on vehicles other than heavy-duty, clean-fuel fleet vehicles. The EPA believes that controlling the nonclean-fuel, heavy-duty fleet vehicles along with all nonfleet, heavy-duty vehicles will effectively reduce congestion and emissions during peak traffic conditions. Sections 182(e)(4) and 246(h) can thus be harmonized by allowing SIP's for extreme areas to include traffic controls on high polluting and most heavy-duty vehicles, but not on heavy-duty, clean-fuel fleet vehicles that have been exempted under EPA regulations promulgated pursuant to section 246(h).

The EPA intends to promulgate its regulations on the fleet program transportation control exemptions shortly. These regulations will address the eligibility of fleets for the TCM exemptions. States may at any time submit TCM's that apply to high polluting or heavy-duty vehicles not subject to the clean-fuel fleet program in extreme areas during periods of heavy traffic.

(f) *New technologies.* The Act recognizes that extreme areas may have to rely to a certain extent on new or evolving technologies to meet certain of the emissions reduction requirements. The relatively long time between developing the initial SIP and attaining the NAAQS, and the degree of emissions reductions needed to attain the standard, guarantees that some control technologies will not be fully demonstrated by the time of SIP development. These measures would include those that may anticipate future technological developments as well as those that may require complex analyses and decision making and coordination among a number of government agencies. Section 182(e)(5) allows the Administrator to approve an extreme area SIP and attainment demonstration that anticipate development of new control technologies, or improvement of existing control technologies if the SIP satisfies the following criteria:

(1) The plan containing the demonstration of attainment must identify all measures, including the long-term measure(s) for which additional time would be needed for development and adoption.

(2) The plan must show that the long-term measure(s) cannot be fully developed and adopted by the submittal date for the attainment demonstration and must contain a schedule outlining the steps leading to final development and adoption of the meaure(s).

(3) The plan must contain commitments from those agencies that would be involved in developing and implementing the schedule for the measure.

(4) The plan must contain a commitment to develop and submit contingency measures (in addition to those otherwise required for the area) that could be implemented if the measure is not developed or if it fails to achieve the anticipated reductions.

(5) The long-term measure(s) must not be needed to meet any emissions reductions requirements within the first 10 years after enactment. The State must submit its contingency measures no later than 3 years before the original long-term measure was to have been implemented. The measures must be adequate to produce emissions reductions sufficient, in conjunction with other approved plan provisions, to achieve the periodic emissions reductions and to attain the ozone NAAQS by the applicable dates. If the Administrator determines that the extreme area has failed to achieve an emissions reductions requirement set forth in section 182 (b)(1) or (c)(2) and that such failure is due in whole or part to an inability to fully implement provisions (related to new technologies) described in section 182(e) (1 through 4) and approved pursuant to section 182(e)(5), the Administrator will require the State to implement the contingency measures to the extent necessary to ensure compliance with the emissions reduction requirements of section 182 (b)(1) and (c)(2). The EPA will set a schedule for implementing contingency measures upon making a finding of failure to meet a milestone.

(g) *Milestone failures (economic incentive programs).* Under section 182(g)(5), if the State fails to submit a compliance demonstration for any extreme area as required by section 182(g)(2), or if the area has not met an applicable milestone as required by section 182(g)(1), the State shall submit a plan revision to implement an economic incentive program (as described in section 182(g)(4)) within 9 months of such failure. The EPA urges the State in this instance to initiate the development of an economic incentive program as soon as it can reasonably define the objectives and scope of an appropriate program, without waiting until such a failure occurs. The EPA belives that early initiation is important so as to allow for sufficient time to develop, implement, and evaluate the effectiveness of the program. Economic incentive programs are discussed in more detail in section III.H.3.

7. Nonclassifiable Nonattainment Areas

(a) *General.* Nonclassified ozone areas consist of transitional, submarginal, incomplete/no data areas. An area is considered transitional under section 185 if it was designated nonattainment both prior to enactment and (pursuant to section 107(d)(1)(C)) at the time of enactment, and did not violate the primary NAAQS for ozone over the 3-year period 1987–1989 (i.e., measured equal to or less than 1.0 exceedances per year based on a full set of quality-assured data from a properly sited monitor(s)). Submarginal areas fall into one of two categories that arise under the provisions of the 1990 CAAA.

This situation exists due to the adjustment for missing or incomplete data when calculating expected exceedances. The first category (Category I) consists of areas presently designated nonattainment that are violating the ozone standard. The second category (Category II) consists of areas designated attainment at enactment that are violating the ozone standard. Finally, if an area retained its nonattainment designation at enactment (under section 107(d)(1)(C)) but adequate data are not available to indicate whether one or more violations of the standards have occurred, the area is considered an incomplete data or no data area.

Section 185A specifically exempts transitional areas from subpart 2 requirements until December 31, 1991. However, the CAAA are silent on whether such areas should be exempt from subpart 1 requirements as well. The CAA provide no specific guidance for submarginal and incomplete/no data areas concerning applicable requirements for these categories. Subpart 1 contains general SIP planning requirements, and EPA believes that subpart 2 is not applicable to submarginal and incomplete/no data areas. Nevertheless, because these areas are designated nonattainment, some aspects of subpart 1 necessarily apply. The EPA's interpretation of the section 172(c) requirements for these areas is given below. Under section 172(b), applicable revisions to the SIP are due 3 years from designation under section 107(d).

(1) *RACT/Reasonably available control measures (RACM)*—(i) Transitional areas. To satisfy section 172(c)(1), transitional areas (section 185A) that continued to show no violations as of December 31, 1991 must ensure, at a minimum, that any deficiencies regarding enforceability of an existing rule are corrected. While section 185A exempts transitional areas from all Subpart 2 requirements until December 31, 1991, and that exemption continues until the area is redesignated to attainment (assuming the area satisfactorily demonstrated attainment by December 31, 1991), States should be aware that in order to be redesignated to attainment such areas must correct any RACT deficiencies regarding enforceability.

(ii) Incomplete/no data areas. Since it is not known whether these areas are violating the standard or not, it is EPA's position that requiring RACT corrections is unreasonable. However, like transitional areas, incomplete/no data areas must correct any RACT deficiencies regarding enforceability of existing rules in order to be redesignated to attainment.

(iii) Sub-marginal areas. Since it is known that sub-marginal areas are violating the standard (only their design value is lower than the threshold for which an area can be classified), it is EPA's position that such areas must make the same RACT corrections (if previously required) as marginal areas. Like marginal areas, sub-marginal areas are exceeding the ozone standard and therefore should apply the same level of RACT as was required before enactment. Under section 172(b), these RACT corrections must be included in the SIP revision due November 15, 1993. However, to the extent an area is subsequently reclassified to one of the nonattainment classifications in Table 1 of section 181, it will be subject to the time schedule of subpart 2.

(2) *Attainment demonstration.* Section 182(a)(4) specifically exempts marginal areas from any attainment demonstration requirement. Since marginal areas are exempt from this requirement, it would be unreasonable to apply this requirement to an area that was either not violating the standard or recorded a design value so low as to be unclassifiable. Therefore, EPA will presume that the existing SIP requirements and any existing and future Federal requirements (e.g., the title II rules) wil be sufficient to provide for attainment in these areas.

(3) *RFP.* A reasonable further progress requirement assumes a long nonattainment period or a large amount of reductions required to attain. Because a transitional, submarginal, or incomplete data area is or is likely to be already in or near attainment, EPA will treat a SIP that includes NSR and RACT corrections (if needed) coupled with Federal measures, as meeting the RFP requirement.

(4) *Emissions inventory.* An emissions inventory is specifically required under section 172(c)(3), and is not tied to an area's proximity to attainment. Moreover, even if these areas are already attaining or near attainment, they will need such an inventory to develop an approvable maintenance plan under section 175A.

(5) *NSR.* Like the emissions inventory requirement, the NSR requirement is not tied to an area's proximity to attainment and therefore exempting a nonattainment area from NSR requirements would clearly violate the Statute. Furthermore, the new NSR program is one of the CAAA's major bulwarks against further deterioration of the Nation's air quality. Therefore, all nonattainment areas, including submarginal, transitional and incomplete/no data areas, are required to adopt NSR programs meeting the requirements of section 173, as amended.

(6) *Monitoring.* Section 172 (b) and (c) explicitly states that nonattainment areas must meet the "applicable" monitoring requirements of section 110(a)(2).

(7) *Contingency measures.* Since submarginal and incomplete/no data areas generally present less serious ozone problems than marginal areas, which are expressly exempted from the requirement for contingency measures under section 182(a), contingency measures are not likely to be necessary to assure attainment for these areas, EPA believes it appropriate not to apply the requirement for contingency measures for these areas under a de minimis approach. The approach is authorized by *Alabama Power* v. *Costle*, 636 F.2d 323, 360–61, 404–05 (DC Circuit 1980), which held that EPA may exempt de minimis actions from a statutory requirement when the burdens of regulation would yield little or no value.

(8) *Attainment dates for nonclassifiable areas.* Section 172(a)(2) requires an attainment date of no later than 5 years from an area's designation as nonattainment. For areas designated nonattainment under section 107(d)(1)(C)(i) (pre-enactment nonattainment areas), the attainment date is November 15, 1995. For newly designated areas, the attainment date will be 5 years from the effective date of the nonattainment designation. For submarginal and incomplete/no data areas that fail to attain in 5 years, EPA is considering one or more of the following options in enforcing a 5-year attainment date for nonclassifiable areas:

(i) If an area fails to attain 5 years from designation, the area would be bumped up to marginal or a classification commensurate with the area's design value if the design value is at least 0.121 ppm.

(ii) If an area fails to attain 5 years from designation either due to incomplete/no data or a submarginal design value, the area retains its status but EPA will tighten subpart 1 requirements. This could include further RACT measures, or possibly a basic I/M program.

The following sections further discuss the applicability of the Act's requirements to each of the three types of nonclassifiable areas.

(b) *Transitional.* A transitional area will have to meet the requirements described below.

(1) *Section 185A requirements.* The Administrator announced in the November 6, 1991 Federal Register which ozone nonattainment areas did not violate the NAAQS during the 36-month period from January 1, 1987 to December 31, 1989. For such areas, the requirements under subpart 2 (of title I part D), including any RACT fix-up obligations, were suspended until December 31, 1991. By June 30, 1992, the Administrator will determine on the basis of the area's average number of exceedances whether the area had in fact attained the NAAQS for ozone by December 31, 1991. Where the Administrator determines that the area attained the NAAQS, the State must submit a maintenance plan for the area within 12 months of such determination. In addition, the other four redesignation requirements under section 107(d)(3)(E) must be met, including RACT fix-ups regarding enforceability.

(2) *Redesignation of transitional areas.* The State must submit complete monitoring data for the transitional area that supports redesignation to attainment (i.e., showing no measured violations during the 36-month period from January 1, 1989, to December 31, 1991) in sufficient time for the Administrator to make a finding of attainment and to promulgate such finding by June 30, 1992. If the Administrator finds the area has attained, the State must submit a maintenance plan within 1 year of the finding along with documentation to support the conclusion that the redesignation requirements under section 107(d)(3)(E) have been met. For a discussion of the specific State actions required in order to satisfy the five redesignation requirements, see "Redesignations" under section III.H.5 of this document.

(3) *NSR.* By November 15, 1992, all nonattainment areas, including transitional areas that have failed to attain, must submit rules to implement the new part D NSR requirements under section 173.[8] In the meantime, the existing part D NSR requirements will remain in effect until the area is redesignated to attainment, at which time the PSD requirements of part C will apply. If the area does not have an approved part D plan for NSR permitting and it issues a permit for a major stationary source or major modification in the transitional area during the interim period before redesignation, the State permit should comply with the requirements in 40 CFR part 51, appendix S.

(4) *Failure to attain.* If a transitional area violates the NAAQS during the 3-year period from January 1, 1989 to December 31, 1991, then it shall be classified in accordance with Table 1, section 181(a). Upon classification, the area shall continue to be subject to the general requirements under subpart 1 not addressed in subpart 2, and those specific provisions under subpart 2 appropriate to the area's classification that would have applied had the area been so classified at the time of the notice of other nonattainment areas' initial classifications under section 181(a)(3). For example, such an area would need to submit RACT fix-up requirements of section 182(a)(2)(A) within 6 months of classification. The Administrator may, however, adjust any applicable deadlines (other than attainment dates) to the extent that such adjustment is necessary or appropriate to ensure consistency among the required submissions.

If complete monitoring data reveal that a transitional area is violating the standard but its design value is less than 0.121 ppm [9]—below the design value ranges in Table 1 (section 181(a))—then the area will be considered submarginal. Refer to the category below entitled "Submarginal."

(c) *Submarginal*— (1) *Category I—(Previously designated nonattainment).* If the area's average expected exceedance rate was more than 1.0 during the 3-year period 1987–1989, it is violating the standard. However, if the area's design value was less than 0.121 ppm, below the threshold for which it can be classified as marginal, the area is submarginal.

(2) *Category II—(New nonattainment areas).* Category II areas are those areas designated unclassified/attainment on the date of enactment, but with an average expected exceedance rate more than 1.0 during the 3-year period 1987–1989. These areas are violating the standard, yet their design values were less than 0.121 ppm, below the threshold for which they can be classified as marginal under Table 1 section 181(1). The EPA also describes such areas as submarginal.

(3) *Requirements.* As discussed above, all nonattainment areas, including submarginal areas, are subject to several of the requirements in subpart 1. Specifically, section 172(b) requires a SIP revision within 3 years of designation that must meet several requirements, in particular, NSR.

If a State submits a request for redesignation to attainment, then a proper and adequate maintenance plan, as defined in section 107(d)(1)(E), must be submitted.

(4) *Failure to attain.* If, at some time in the future (before the area has demonstrated that it has met the five requirements for redesignation under section 107(d)(3)(E)), a submarginal area violates the NAAQS and the design value is equal to or exceeds 0.121 ppm, it is EPA's position that the area will at that time be classified under Table 1, section 181(a), according to its design value.

Once classified, the area will continue to be subject to those subpart 1 requirements not addressed in subpart 2 and the specific provisions of subpart 2 determined by its classification. Under section 182(i), these provisions apply as if the area had been so classified at enactment, except the EPA may adjust any applicable deadlines (other than attainment dates) to the extent necessary or appropriate to assure consistency among the required submissions.

(5) *NSR.* By November 15, 1992, all ozone nonattainment areas, including submarginal areas (both Category I and Category II) must submit rules in approvable form to EPA to implement the new NSR requirements under section 173. In the meantime, the existing part D NSR requirements remain in effect.

If a submarginal area does not have an approved part D NSR permitting program, and the State wishes to issue a permit for a major stationary source or major modification in that area, the State permit must comply with the requirements of 40 CFR part 51,

[8] If a transitional area has not recorded any violations by December 31, 1991, and is in the process of developing a maintenance plan per section 185A, then EPA may not require nonattainment NSR rules. However, these areas must continue to apply their existing NSR program or comply with the NSR permitting requirements of 40 CFR part 51, appendix S. Prior to redesignation, these areas also must adopt and be prepared to implement a permitting program that satisfies the requirements of part C and EPA's regulations implementing the PSD program. Areas should consider the need for offsets under the part C program to insure that new sources do not "cause or contribute" to an increase in pollutant levels that would take the area out of compliance. If the area is found to be out of compliance and the statutory deadlines for adopting amended part D permitting rules for the pollutant in question have passed, EPA may impose a construction ban pursuant to section 113(a)(5) until such time as the area adopts a part D program satisfying the NSR requirements of the CAAA.

[9] Readers are reminded that for purposes of determining exceedances, an exceedance is a daily 1-hour maximum which is equal to or greater than 0.125. In order to be classified under Table 1 section 181(a)(1), a design value must be equal to or greater than .121.

appendix S, until the State adopts the necessary part D NSR provisions.

(6) *Redesignation to attainment.* In order to be redesignated to attainment, the State must demonstrate that the five redesignation requirements (i–v) under section 107(d)(3)(E) have been met. See section III.H.5, which describes the specific actions that will determine compliance with each of these requirements.

(d) *Incomplete data or no data*—(1) *Requirements.* As discussed above in the Introduction, all nonattainment areas, including incomplete data or no data areas, are subject to the requirements in subpart 1. Specifically, section 172(b) requires a SIP revision within 3 years of designation.

If a State submits a request for redesignation to attainment, then a proper and adequate maintenance plan, as defined in section 107(d)(1)(E), must be submitted. The discussion under "Redesignation" in section III.H.5 of this preamble describes the specific actions that will determine compliance with each of these requirements.

(2) *NSR.* By November 15, 1992, all ozone nonattainment areas, including incomplete or no data areas, must submit rules to implement the new NSR requirements of sections 172(c)(5) and 173. In the meantime, the existing part D NSR requirements remain in effect. If the area does not have an approved part D NSR permitting program, and the State issues a permit for a major stationary source or major modification in the area, the State permitting program should comply with the requirements in 40 CFR part 51, appendix S, until the new part D NSR requirements become effective.

8. Transport Areas

Section 176A allows the Administrator to establish a transport region covering multiple States whenever interstate transport of pollutants contributes significantly to violations of the NAAQS. Section 184(a) specifically created at enactment, by operation of law, an ozone transport region comprising the States of Connecticut, Delaware, Maine, Maryland, Massachusetts, New Hampshire, New Jersey, New York, Pennsylvania, Rhode Island, and Vermont, and the CMSA that includes the District of Columbia. Section 184(b) contains the specific requirements for States in the ozone transport region(s).

(a) *Specific requirements.* States within ozone transport regions must revise their SIP's to include specific measures by November 15, 1992 in the case of the region established by section 184(a), or within 9 months of inclusion in a transport region in the case of a State subsequently included in a transport region under section 176A. The discussion here will focus on the region established under section 184(a), and, for convenience, that region will be referred to as the Northeast transport region or just the transport region. If other ozone transport regions are established under section 176A, States in these regions must also adopt and implement the specific controls discussed below.

(1) *Enhanced I/M.* A State within the transport region must adopt a program pursuant to section 184(b)(1)(A) meeting the requirements of section 182(c)(3), "Enhanced Vehicle Inspection and Maintenance Program," for any MSA (or portion of an MSA) within the State that has a population of 100,000 or more. The Act does not address the census year for this population; EPA believes the year of enactment (1990) is the correct year to use in this case.

(2) *RACT on VOC sources.* Each State in a transport region must adopt VOC RACT regulations for sources located within that portion of the State included in a transport region.[10] Under section 184(b)(1)(B), the RACT rules that apply to sources for which a CTG was issued before or after enactment must be submitted by November 15, 1992.

Section 184(b)(1)(B) specifies that the State must submit by November 15, 1992, a plan containing RACT rules for sources covered by a CTG issued after enactment. However, many past-enactment CTG's will not be issued by November 15, 1992; indeed, Congress did not contemplate that all would be issued until November 15, 1993 (see section 183(a)). For that reason it would be impossible for a State to submit actual RACT rules reflecting consideration of the post-enactment CTG's by November 15, 1992. Therefore, in order to meet the submittal requirement, the State must submit an enforceable commitment to adopt and implement RACT rules for sources covered by CTG's issued after enactment in accordance with the schedules contained in each of the CTG's. The CTG document in Appendix E lists the 11 CTG's EPA plans to issue under section 183. The States should refer to that document.

Furthermore, section 184(b)(2) provides that VOC sources with the potential to emit at least 50 tons per year are effectively subject to the moderate area requirements. Therefore, EPA believes that the schedule for submitting and implementing these RACT rules should be consistent with the requirements of section 182(b)(2) which requires submittal by November 15, 1992 and implementation no later than May 31, 1995.

(3) *NSR for VOC sources.* Since section 184(b)(2) requires that stationary sources of VOC having the potential to emit at least 50 tons per year shall be considered major sources and subject to the same requirements that apply to major sources in ozone areas classified as moderate (section 182[b]), the State must also adopt rules to apply the part D NSR permitting provisions [11] for ozone statewide, unless a portion of the State has been excluded from the transport region under section 176A(2). These rules, which are due by November 15, 1992, include requirements that a new or modified major stationary source will apply controls representing LAER, and that the source will obtain an emissions offset prior to operation. The emissions offset is based on the ratio of actual emissions reductions of VOC to total allowable increases in emissions that would result from construction and operation of the source. In this case, the required ratio is at least 1.15 to 1 (the ratio applicable to moderate ozone areas). It should be noted that in these areas classified as serious or higher, a higher offset ratio would apply. State rules must ensure that the offsets obtained for a new or modified stationary source will be consistent with any State or regional attainment strategies. All NSR requirements of part D must be met for permit issuance.

In nonattainment areas within the transport region, offsets must generally be obtained from the nonattainment area where the source wishes to locate except as allowed by section 173(c) of the amended Act. Section 173(c) allows offsets from other nonattainment areas if the area has equal or higher nonattainment classification than the area where the source is located, and emissions from such other area contribute to a violation of the standard

[10] Section 176A(a)(2) provides a process for modifying the boundaries of a transport region. However, EPA will not allow a delay in the adoption of measures under section 184(b) due to a State request to exclude a portion of the State from the transport region. The EPA expects the States within a transport region and the transport commission to consider requests for deletion of areas quickly so as to minimize the uncertainty States may have regarding plan submittals due 2 years from enactment (for the Northeast transport region) or 9 months after subsequent inclusion of an area and transport region. Although section 184(b) does not specifically discuss how much less than the entire State can be subject to the requirements, EPA interprets section 176A as establishing a process whereby a portion of a State can be removed from the region and exempted from the requirements.

[11] See section III.G for a complete discussion of the NSR provisions.

in the nonattainment area in which the new source is located. For attainment areas within the transport region, guidance for location of offsetting emissions at 40 CFR part 51, appendix S, should be followed. Appendix S specifies that emissions offsets for VOC may be obtained from sources located anywhere within the broad vicinity of the proposed new source. Generally, VOC offsets may be obtained if within the same Air Quality Control Region (AQCR) as the new source or from other areas that may be contributing to the ozone problem at the proposed new source location. It is desirable to obtain offsets from sources located as close to the proposed new source site as possible. If the proposed offsets would be from sources located at greater distances from the new source, the reviewing authority should increase the ratio of the required offsets and require a showing that nearby offsets were investigated and reasonable alternatives were not available.

The PSD provisions of part C (as well as the nonattainment provisions discussed above) continue to apply to stationary sources in the areas designated attainment or unclassifiable that are within the ozone transport region. Title I does not exempt these sources from the PSD requirements. Likewise, the major stationary source thresholds defined in the PSD rules continue to apply when determining PSD applicability.

(4) *Gasoline vapor recovery.* Section 184(b)(2) requires the Administrator to complete a study identifying control measures capable of achieving emissions reductions comparable to those achievable through vehicle refueling controls contained in section 182(b)(3) by November 15, 1993. All areas within a transport region are then required, within 1 year of completion of this study, to adopt and submit as an SIP revision the comparable measures or the section 182(b)(3) Stage II vapor recovery measures. However, pursuant to section 182(b)(3), ozone nonattainment areas classified as moderate or above must adopt and submit Stage II rules by November 15, 1992. Although moderate nonattainment areas that are located within an ozone transport region may become exempt from the section 182(b)(3) requirement due to the adoption of onboard regulations (see section 202[a][6]) such areas will remain subject to the transport requirement of section 184(b)(2). The exemption and waiver provision of section 202(a)(6) applies only to the section 182(b)(3) Stage II requirement, not to he the requirement of section 184(b)(2) to adopt Stage II or measures identified as achieving equivalent reductions. The transport provision is a separate requirement that focuses not on Stage II, but on means to get reductions equivalent to what would be achieved under section 182(b)(3).

(b) *Other requirements.* The transport region or portions thereof may also be subject to additional control requirements resulting from recommendations from the transport commission under section 184(c). If EPA approves a recommendation from the commission submitted under section 184(c), EPA will issue a finding that the SIP for the appropriate State(s) is inadequate and must be revised within 1 year to incorporate the recommendations of the transport commission.

Each ozone nonattainment area located within the transport region is still subject to the applicable requirements for a demonstration of attainment under section 182 (b)(1)(A) and (c)(2). The EPA realizes that in some cases certain demonstrations will be complicated by the RFP requirements and attainment deadlines that apply to areas of different classifications.[12] For example, a moderate area located within the transport region is still subject to the 6-year attainment deadline and the section 182(b)(2)(A) requirement to provide annual emissions reductions in its plan to attain by the deadline. However, this area is (at least, presumptively) being affected by transport from another area(s) and is, as well, possibly affecting other areas, itself. If the "other" areas that are affecting air quality levels in this moderate area are classified as serious or severe, those areas will be reducing their emissions over a longer time frame in order to attain the standard. That is, these "other" areas could still be having significant effects on the moderate area at the time when the moderate area must demonstrate attainment.

As discussed within the context of demonstrations for moderate areas, EPA believes that this situation is somewhat analogous to the situations addressed in section 182(h) for RTA's and in section 182(j) for multi-State ozone nonattainment areas. In these cases, the 1990 CAAA recognize that at some point, an area being affected by emissions from another area(s) may not be able to achieve sufficient emissions reductions on its own to demonstrate attainment. In these cases, the area is relieved from certain requirements in the CAAA that would require additional controls. There is no explicit recognition in the CAAA of this occurring in other situations.

In general, two situations exist in which an area might be subject to additional emissions reductions requirements related to the demonstration of attainment. In the first, an area might be receiving such high levels of transport that even if it reduced its emissions dramatically (e.g., totally eliminated its own emissions), the incoming ozone and precursors would be high enough to continue to cause violations of the standard beyond the applicable attainment date. In the second situation, the area might be able to achieve additional reductions (beyond those required under section 182), but even where those additional reductions could be achieved to demonstrate attainment, the question arises whether it is equitable to require those reductions or to allow more time for the reductions in the "upwind" area to take place. As described above, however, the statute provides no express relief for these situations. Thus, where the demonstration of attainment is complicated by transport between two areas of different classifications, the State is still responsible for developing and submitting demonstrations which show that the standard will be attained by the applicable date. In other words, the State must provide for sufficient emissions reductions on a schedule that will ensure attainment in its moderate area, for example, within 6 years after enactment. The EPA believes that the wording in section 182(b)(1)(A)(i) requires the State to develop a plan providing such emissions reductions. The area does not have the option of requesting to be reclassified to the next higher classification.

At this time, EPA is not sure to what degree the situation described above is likely to occur or know of any real cases where this will be a problem. If such a situation were to occur, EPA intends to look at the facts specific to that area. Considerations would include the results of the area's attainment analyses along with any region-wide modeling results in evaluating available SIP approval options. When such areas develop the demonstration of attainment due in November 1994, they should provide a comprehensive assessment of the impacts of all control measures being implemented in both the local and upwind areas. States should clearly show the extent to which the downwind

[12] The discussion here regarding areas within an existing transport region also applies to areas that are impacted by ozone and precursor transport but are not yet in transport regions. Therefore, much of this discussion also occurs under section III.A.3.(b) for moderate areas.

area is dependent on upwind strategies while fully meeting its own requirements associated with its classification.

9. Multi-State Ozone Nonattainment Areas

Section 182(j) defines a "multi-State ozone nonattainment area" as a single ozone nonattainment area that covers more than one State. Section 182(j)(1)(A) and (B) set certain requirements for such areas. First, each State in a multi-State ozone nonattainment area must take all reasonable steps to coordinate the implementation of the required revisions to SIP's for the given nonattainment area (section 182(j)(1)(A)). Next, section 182(j)(1)(B) requires the States to use photochemical grid modeling or any other equally effective analytical method approved by EPA for demonstrating attainment. The EPA is prevented by section 182(j) from approving any SIP revision submitted under that section if a State has failed to meet the above requirements.

A State within a multi-State ozone nonattainment area that fails to provide a demonstration of attainment for that State's portion of the area is allowed by section 182(j)(2) to petition EPA to determine whether such State could have demonstrated attainment but for the failure of one or more States in the area to adequately implement the required measures under section 182 for the given area. If EPA so finds, then the sanctions provisions under section 179 shall not apply to the State whose failure to make an adequate attainment demonstration was due to failure by other States to implement section 182 measures.

Pursuant to section 182(j)(1)(A), EPA is calling on each multi-State ozone nonattainment area to develop a joint work plan as evidence of early cooperation and integration. The work plan must include a schedule for developing the emissions inventories, the 15 percent progress requirement SIP revision (if applicable), the 3 percent per year progress requirement SIP revision (if applicable), and the attainment demonstration for the entire multi-State area. Each State within a multi-State ozone nonattainment area is responsible for meeting all the requirements relevant to the given area.

Marginal multi-State ozone nonattainment areas are excluded from undertaking photochemical grid modeling for submittal in attainment demonstrations by section 182(a)(4), which excludes any marginal area from the requirement to submit attainment demonstrations. (The EPA believes that the section 182(a)(4) exemption supersedes the applicability of the multi-State area modeling requirement for marginal areas.)

Moderate and above multi-State ozone nonattainment areas must submit attainment demonstrations which use photochemical grid modeling (or equivalent). This section 182(j)(1)(B) requirement can be met through application of EPA approved modeling techniques for SIP revisions as recommended in the current version of EPA's "Guideline on Air Quality Models (Revised)." The Urban Airshed Model is recommended for modeling applications involving entire urban areas. Care should be taken to coordinate strategies and assumptions in a modeled area with those in other, nearby modeled areas in order to ensure that consistent, plausible strategies are developed.

Section 182(j) requires States in which a moderate multi-State nonattainment area occurs to use photochemical grid model to demonstrate that prescribed controls are sufficient to attain the NAAQS. The section is silent concerning the timing for such an analysis. However, one of the distinctions between section 182(b) and section 182(c) is that serious areas (for which grid models are required) are given an extra year (until November 1994 instead of November 1993) to submit a SIP reflecting an attainment demonstration. This is in recognition of the time required to gather data to support to perform a grid modeling analysis. Thus, a reading of section 182 (b), (c), and (j) implies that the requirement that multi-State moderate nonattainment areas perform grid modeling effectively extends for 1 year (from November 1993 to November 1994), the deadline for moderate multi-State areas to submit a SIP containing an attainment demonstration. Stated differently, the requirement for grid modeling imposed on multi-State moderate areas by section 182(j) supersedes the requirement to have the November 1993 SIP transmittal contain an attainment demonstration. Instead, for practical reasons, the requirement imposed by section 182(j) implies a need for a November 1994 SIP revision reflecting provisions needed to attain the NAAQS as determined through a grid modeling analysis.

The effect of this interpretation of section 182 (b) (c) and (j) is that the timing for SIP submittals in moderate inter-State nonattainment areas is identical to that in serious nonattainment areas. That is, a SIP revision providing for 15 percent reduction in VOC emissions from 1990 through 1996 is due by November 1993. A second SIP revision containing necessary provisions to demonstrate attainment of the NAAQS is due in November 1994.

B. Carbon Monoxide

The 1990 CAAA create a new classification structure for CO nonattainment areas based on the severity of the nonattainment problem. For each area classified under this section, the attainment date shall be as expeditious as practicable, but no later than the date in the following table. The classification scheme is as follows:

Area classification	Design value, ppm	Primary standard attainment date
Moderate	9.1-16.4 ppm	December 31, 1995.
Serious	16.5 and above.	December 31, 2000.

As provided in part D subpart 3, Emission Inventories, rules for I/M, NSR rules for areas with a design value greater than 12.7 ppm, and certain other planning or control measures are required within 2 years after enactment (November 15, 1992) for both previously and newly designated nonattainment areas. If an area's boundaries are subject to adjustment under section 107(d)(4)(A)(iv) (for serious CO areas), final designation may be promulgated as late as 14 months after enactment, or March 1992—just 8 months before major rules (e.g., I/M, NSR) and the emission inventory must be submitted. These nonattainment areas should not delay their adoption of rules or preparation of inventories while the boundary determinations are proceeding. Rather, EPA believes these areas should be prepared to readily adopt rules and complete their emission inventories for the entire MSA/CMSA, should it be concluded that the nonattainment boundaries will be the MSA/CMSA. The EPA will require those submittals, which are due by November 15, 1992, to address the entire nonattainment area.

In addition to the two classifications, some nonattainment areas do not fit into the classification scheme and are nonclassified areas. The CO section will describe the requirements for all areas (moderate and serious and the special classifications) in much the same way as the 1990 CAAA describes the requirements. The requirements are additive (i.e., a serious area has to meet all moderate requirements and all serious requirements; etc.). Requirements discussed for moderate areas will be repeated for serious areas only if the requirements are different.

1. Moderate Areas 12.7 ppm and Below

(a) *Emission inventory.* Section 187(a)(1) requires moderate CO areas to submit by November 15, 1992, "a comprehensive, accurate, current inventory of actual emissions from all sources, as described in section 172(c)(3)." Draft base year inventories must be submitted between January 1, and May 1, 1992. The inventory is defined as the base year inventory and is a "current inventory." The EPA interprets the requirement that the inventory be "current" to mean that it be an inventory for 1990 (year of enactment). The inventory is to address actual CO emissions during the peak CO season for the area (generally the winter months). All stationary point, area, highway/nonhighway mobile, and OCS sources (if any) are to be included in the compilation.

As one of the first steps in developing the base year inventory, the States are to prepare an IPP, which is due in final form to EPA by October 1, 1991. The IPP should include a brief statement of how the State intends to develop, document, and submit its inventory. Another early step in the inventory development process is preparing the point source portion of the base year inventory. Updated guidance for preparing emission inventories was issued in May 1991; however, the point source portion is essentially the same as it was for the post-1987 SIP's. Thus, States should have already begun gathering data on point source emissions. States are encouraged to submit the point source portion of the inventory to EPA as early as possible.

States that have fully completed portions of their base year inventories for 1987, 1988, or 1989 may request EPA approval to update these portions. Otherwise, States will have to prepare a completely new 1990 base-year inventory. Guidance on the procedure to request an update was provided in May 1991 ("Procedures for te Preparation of Emission Inventories for Carbon Monoxide and Precursors of Ozone, Volume I [Revised]"). However, for purposes of accuracy and compliance with the goals of the 1990 CAAA, EPA encourages all areas to prepare new 1990 base-year inventories even if they already assembled base-year inventories for 1987/1988/1989.

The EPA issued an updated version of MOBILE4, its mobile source emissions estimation model, in July 1991. The updated version is MOBILE4.1, and it replaces and supersedes its predecessor. States, except for California, are required to use MOBILE4.1 in determining highway mobile-source emissions for all of their base-year emissions inventories under the Act. California should consult with EPA Region IX in determining which mobile model to use. The majority of the enhancements in the revised model are internal to the model and do not directly affect the use for base-year inventory emission factor generation purposes. The reader should refer to EPA's "Emission Inventory Requirements for Carbon Monoxide State Implementation Plans" for more information.

The July 1991 guidance also contains information related to some area and off-highway mobile source categories that may significantly affect how emissions are to be determined. For these categories (railroads and aircraft), States must use the new methodology and develop new emission estimates. The States will also be required to develop new 1990 base-year inventories for highway mobile sources that account for fleet turnover, road construction resulting in changes in VMT patterns, and changes in speed limits. The new 1991 guidance on MOBILE4.1 and off-highway mobile sources guidance on VMT should be consulted for additional detail.

The EPA guidance should also be consulted for information on how to account for rule effectiveness when calculating emissions from stationary sources of CO. Rule effectiveness is a measure of the ability of a regulatory program to achieve all the emission reductions that could be achieved by full compliance with the program by all sources at all times. For the purpose of base-year inventories under the 1990 CAAA, EPA will allow the use of an 80 percent default value but will also give States the option to derive local category-specific rule effectiveness factors within some tightly prescribed guidelines discussed in the guidance.

Finally, the reader should refer to section III.B.6 for additional information related to base year inventories for multi-State nonattainment areas.

By meeting the specific inventory requirements discussed above, the State will also satisfy the general inventory requirements of section 172(c)(3).

(b) *I/M corrections.* Section 187(a)(4) requires States with moderate CO nonattainment areas that already include I/M programs or that were required by the pre-1990 Act to include I/M programs in their SIP's, to submit to EPA immediately upon enactment any revisions necessary to provide for a program no less stringent than that required prior to enactment or committed to in the SIP in effect at the time of enactment, whichever is more stringent. Requirements for these I/M programs are contained in section 182(a)(2)(B). This section requires EPA to review, revise, update, and republish in the Federal Register within 1 year of enactment, the guidance for I/M programs required by the Act, taking into consideration the Administrator's investigations and audits of such programs. In short, the moderate areas must maintain existing I/M programs and make corrections to those programs to meet existing I/M policy; when updated policy is published, these areas must submit revisions to address any revised guidance.

More specifically, section 182(a)(2)(B) requires States to meet the basic I/M performance standard that has been in effect since 1977. That performance standard is based on a "model" program design consisting of a centralized progam that annually tests tailpipe emissions on all light-duty vehicles using emission standards for 1981 and later model vehicles of 1.2 percent CO and 220 ppm HC and 20 percent stringency for pre-1981 vehicles. A compliance rate of 100 percent and a waiver rate of zero percent are assumed. States must demonstrate an emission reduction for the I/M program included in the SIP that is at least as great as that produced by the "model" basic program (or the program already included in the SIP, whichever is greater), using the most current available version of EPA's mobile source emission model. The I/M programs are required in the urbanized area portions, as defined by the Bureau of the Census, of the nonattainment area.

The EPA expects to issue the policy for I/M areas in the near future. When published, the policy will state the date when such programs are to be implemented. The EPA intends to allow all areas ample time to adopt and submit required I/M programs, including I/M corrections under section 187(a)(4). States that have both basic and enhanced I/M areas may opt to implement enhanced programs in all affected urbanized areas. States which are only required to implement basic programs must submit SIP revisions for I/M program addressing any revised policy. The guidance will cover the elements of the SIP revision.

As mandated by section 202(m), the Administrator will promulgate regulations requiring manufacturers to install diagnostic systems on all new light-duty vehicles and light-duty trucks. The purpose of these systems is to identify and track emissions-related systems deterioration or malfunction. According to section 202(m)(3), within 2

years of EPA's promulgating regulations requiring States to do so, all States with I/M programs must amend their SIP to provide for inspection of these onboard diagnostics systems. The EPA will issue revised I/M guidance which addresses onboard diagnostic inspections.

(c) *Periodic inventory.* According to section 187(a)(5), moderate CO nonattainment areas are required to submit periodic inventories starting by September 30, 1995, and then every 3 years thereafter until the area is redesignated to attainment. The periodic inventory shall meet the same requirements as the base year inventory. Additional guidance is available on inventory procedures (see section III.A.2.(a)).

By meeting the specific periodic inventory requirements discussed above, the State will also satisfy the general periodic inventory requirements of section 172(c)(3).

(d) *Attainment demonstration.* No attainment demonstration is required for moderate CO areas when the CO design value is 12.7 ppm or below.

(e) *Oxygenated fuels*—(1) *Schedule.* Section 211(m) requires that SIP revisions containing oxygenated fuel requirements be submitted to EPA in adopted form by any State containing all or part of a nonattainment area for CO with a design value of 9.5 ppm or above based on 1988 and 1989 data. Section 187(b) of the Act calls for SIP revisions to implement oxygenated gasoline requirements in certain CO nonattainment areas within 2 years of enactment. Because section 211(m) is more detailed than section 187(b) and applies to a greater number of CO nonattainment areas, the substantive requirements of section 211(m) should be followed in preparing SIP revisions. The design value is to be calculated according to the most recent interpretation methodology issued by the Administrator prior to November 15, 1990, which is contained in June 18, 1990 memorandum from William Laxton, Director, Technical Support Division, to the Regional Division Directors. The statute provides that States with areas having design values of 9.5 ppm or above for any 2-year period after 1989, e.g., 1990 and 1991, have 18 months after such 2-year period or designation as nonattainment, whichever is later, to submit a SIP revision meeting the requirements of this section.

The revision must require that any gasoline sold or dispensed by retailers and wholesale purchasers/consumers in the nonattainment area must contain not less than 2.7 percent oxygen by weight. This oxygen content requirement will also apply to gasoline sold or dispensed by refiners or marketers within the larger of the MSA/CMSA containing the nonattainment area. These gasoline content requirements apply during the time of the year determined by the Administrator to be when the area is prone to high ambient CO concentrations. This yearly period can be expected to be no less than 4 months. The EPA issued proposed guidance on the length of the control periods on July 9, 1991 (56 FR 31151).

States may, at their option, include provisions for marketable oxygen credits in their SIP revisions. Under such a program, gasoline with a higher oxygen content than required could offset gasoline with a lower oxygen content than required. The EPA issued proposed guidelines for such marketable oxygen credit programs on July 9, 1991 (56 FR 31154).

At the request of a State, EPA will consider reducing the time period required for an oxygenated gasoline program. The State must demonstrate that, because of meteorological conditions, a reduced period will ensure that there will be no exceedances of the CO air quality standard outside of such reduced period. The demonstration should include consideration of meteorological conditions, peak periods of CO emissions, and historical ambient air quality data, including peak periods of CO concentrations. The demonstration should use EPA-approved dispersion modeling techniques.

For areas with a design value of 9.5 ppm or more as of November 15, 1990 based on 1988 and 1989 data, the oxygenated gasoline requirements must generally take effect no later than November 1, 1992. For areas which have a design value of 9.5 ppm or greater for any 2-year period after 1989, the oxygenated gasoline requirements must generally take effect no later than November 1 of the third year after the second year of the applicable 2-year period. In both cases, the November 1 date may change based either on EPA's determination of when the area is prone to high ambient concentrations of CO, or on an EPA determination to reduce the control period based on meteorological conditions.

Requirements for oxygenated gasoline need not apply to the attainment area outside of the CMSA or MSA. However, oxygenated gasoline requirements shall continue to apply for nonattainment areas that EPA redesignated as attainment, to the extent needed to maintain the CO standard. The revision shall cover gasoline offered for sale or supply, dispensed, transported, or introduced into commerce.

(2) *Waivers.* The statute provides for a waiver from oxygenated gasoline requirements under certain conditions described below. A waiver from the oxygenated gasoline requirements may be granted to a State which demonstrates to EPA's satisfaction that using oxygenated gasoline would prevent or interfere with the attainment by the area of a NAAQS or a State or local ambient air quality standard for any air pollutant other than CO. A waiver from the oxygenated gasoline requirement may similarly be granted upon demonstration by the State to the satisfaction of EPA that mobile sources of CO do not contribute significantly to CO levels in the area. Finally, EPA may waive for 1 year the effective date of the requirement for oxygenated gasoline in a nonattainment area upon petition from any person asserting that there is an inadequate domestic supply of, or distribution capacity for, such oxygenated gasoline or oxygenate additives necessary to meet the requirements, if EPA finds this assertion to be true. To facilitate EPA review, all claims asserted should be demonstrated and documented in the petition. Upon another petition, EPA may again delay the effective date of the requirement in a nonattainment area for 1 additional year. The EPA issued proposed guidelines for waivers based on inadequate domestic supply of, or distribution capacity for, oxygenated gasoline or oxygen additives on September 3, 1991 (56 FR 43593). These guidelines discuss the contents of such petitions, guidelines for, and decisions on such petitions, as well as other relevant factors.

(f) *NSR.* The part D NSR permit requirements of section 173 apply in CO nonattainment areas. All moderate CO nonattainment areas with a design value of 12.7 ppm or less must submit proposed part D NSR programs no later than November 15, 1993. The provisions of these plans must be developed in accordance with the requirements of sections 172(c)(5) and 173. The major stationary source threshold for all moderate areas remains unchanged at 100 tons per year of CO. If the area does not have an approved part D NSR permitting program and a State wishes to issue a permit for a major stationary source or major modification in such area during the interim period, the State permit should comply with the requirements in 40 CFR part 51, appendix S, until new NSR provisions are in effect.

(g) *Bump-up requirements.* According to section 186(b)(2), moderate CO nonattainment areas that fail to attain

the standard must be reclassified to serious and are then subject to the serious area requirements. This reclassification process is referred to as "bump-up." The EPA must determine within 6 months after the attainment date whether an area has attained the NAAQS for CO. The determination of attainment will be based on the design value for the area as of the attainment date. In making this determination, EPA will use the most recently available, quality-assured air quality data covering the appropriate 2-year period up to and including the attainment date. If EPA determines that an area has not attained, EPA will publish a notice and the area will be reclassified by operation of law. As specified by section 187(f), the Administrator may adjust any applicable deadlines (other than the attainment date) where such deadlines are shown to be infeasible.

As provided in section 186(a)(4), up to two 1-year extensions of the attainment date can be granted for an area if the State has met all applicable requirements contained in its implementation plan, and if the NAAQS has been exceeded no more than once during the year in which the area was to have reached attainment. Because EPA will be reviewing available data to determine the attainment status, the State should submit its application for this extension as soon as the necessary air quality data are available.

2. Moderate Areas Above 12.7 ppm

Unless otherwise noted, all moderate areas above 12.7 ppm shall meet those requirements applicable to moderate areas below 12.7 ppm, as well as the following requirements.

(a) *VMT forecasts.* Section 187(a)(2)(A) requires that States include a forecast of VMT for each year before the attainment year in the SIP revision for CO submitted to EPA by November 1992 under section 187(a)(7). The SIP revision must provide for annual updates of the forecasts and annual reports on the extent to which the forecasts were accurate, as well as estimates of actual VMT in each year for which a forecast was required. The forecast and reporting requirement applies to each CO nonattainment area having a design value above 12.7 ppm at the time of its classification. States should follow EPA guidance on VMT forecasting to be issued shortly.

The first set of forecasts is due with the SIP revision. Subsequent forecasts are to be submitted to EPA together with annual reports. The first forecast year should begin with 1993 (the first foreceast year) and should include all subsequent years up to the year of attainment. The first annual report is due September 1994 and should be accompanied by updated forecasts of 1994 and all subsequent years up to the attainment year.

Annual reports must contain annual updates of the VMT forecasts and must discuss the extent to which such forecasts proved to be accurate. These reports must also contain estimates of actual vehicle miles traveled in each year for which a forecast was required.

Recognizing that a certain amount of statistical variability is present in the VMT estimation process, EPA believes it is appropriate to allow a margin of error to be applied to VMT comparisons but that this margin should be reduced over time to account for improvements in VMT estimation methodologies. Consequently, EPA will allow a 5 percent margin of error for VMT comparisons made in 1994, a 4 percent margin for comparisons made in 1995, and a 3 percent margin for comparisons made in comparisons made in 1994, 1996 and later years. But since each revised forecast becomes the VMT baseline for triggering contingency measures, the application of a margin of error every year could allow the forecasts to increase without bound, without ever triggering contingencies. To avoid this occurrence, EPA believes it is appropriate to limit cumulative VMT growth to no more than 5 percent above the VMT forecast used as the basis for the area's attainment demonstration.

If estimated actual VMT or an updated forecast exceeds the most recent prior forecast by more than the margin of error allowed for a particular year, and/or if estimated actual VMT or forecasted VMT exceeds the cumulative 5 percent cap above the attainment demonstration forecast, contingency measures will be triggered in the nonattainment area. These contingency measures are to be adopted and enforceable in the SIP.

(b) *Contingency measures.* Section 187(a)(3) requires areas with design values above 12.7 ppm to implement contingency measures if any estimate of actual VMT in the nonattainment area, or any updated forecast of VMT contained in an annual report for any year prior to attainment, exceeds the number predicted in the most recent VMT forecast. Contingency measures must also be implemented if the area fails to attain the NAAQS for CO by the attainment date, unless it is granted an extension. For CO area with design values at or below 12.7 ppm, contingency measures are needed to satisfy the provisions under section 172(c)(9) and are due by November 15, 1993, as set by EPA under section 172(b). These provisions require contingency measures to be implemented in the event that an area fails to attain by the applicable attainment date. All contingency measures for CO areas with design values above 12.7 ppm must be adopted and enforceable and submitted to EPA by November 15, 1992, as set by EPA under section 172(b). This is the date by which the State must submit to EPA the CO SIP with demonstrations of attainment for moderate areas having a design value at or above 12.7 ppm. These contingency requirements for SIP's supersede the contingency requirements contained in the 1982 ozone and CO SIP guidance, 46 FR 7182 (January 21, 1981).

The 1990 CAAA do not specify how many contingency measures are needed or the magnitude of emission reductions (or VMT reductions) they must provide. The EPA believes that for serious nonattainment areas, a logical contingency measure for failure to attain by the attainment date would be the adoption of a requirement for a minimum 3.1 percent oxygen content of gasoline subject to the waiver provisions in section 211(m)(3). This suggested contingency measure parallels the requirement under section 211(m)(7) for serious areas which fail to attain the CO NAAQS to adopt and implement an oxygenated fuels program of at least 3.1 percent. For serious areas that fail to meet rate of progress requirements, for moderate areas that fail to attain by the attainment date, and for all areas that exceed a VMT forecast, States may select contingency measures for the reduction of CO emissions.

The EPA believes that for exceedance of a VMT forecast, one appropriate choice of contingency measures would be to provide for the implementation of sufficient VMT reductions or emissions reductions to counteract the effect of 1 year's growth in VMT while the State revised its SIP (including VMT projections) to provide for attainment by the applicable date. These measures may offset either the excess VMT in the nonattainment area or the additional CO emissions in the area that are attributable to the additional VMT. Since EPA will require the State to revise its SIP within 1 year of finding that VMT levels are exceeding forecasts considering the tolerance discussed earlier, the contingency measures should be capable of reducing VMT or resultant emissions by an amount equal to the projected annual growth rate for VMT. In other words, if VMT is expected to increase at a rate of 2 percent per year, the contingency measures under this alternative should be capable of

reducing future VMT (or offsetting VMT growth) by 2 percent.

As discussed above for ozone areas, EPA interprets the requirement for contingency measures to "take effect ... without further action by the State or the Administrator" to mean that no further rulemaking activities by the State or EPA would be needed to implement the measures. Certain actions, such as notification of sources, modification of permits, etc., would probably be needed before a measure could be implemented effectively. States must show that their contingency measures can be implemented with minimal further action on their part and with no additional rulemaking actions.

(c) *Special rule on TCM's for Denver.* The requirements of section 187(a)(2)(B) have the same effect as sections 182(d)(1)(A) and 187(b)(2), discussed below in section III.B.3.(b) (TCM's equivalent to severe ozone TCM's). Readers are referred to that discussion for a description of this requirement.

(d) *Enhanced I/M.* Section 187(a)(6) requires moderate or above CO nonattainment areas with a design value greater than 12.7 ppm to implement enhanced I/M programs in urbanized areas within the nonattainment areas, as defined by the Bureau of Census, with 1980 populations of 200,000 or more. The section requires that the plan meet the requirements of section 182(c)(3), as discussed in the section in this preamble concerning enhanced I/M in serious and above ozone nonattainment areas.

In some cases, areas may have become newly subject to both basic and enhanced I/M requirements at the time of enactment, with the basic I/M requirements due shortly prior to the deadline for submission of the SIP revision providing for the enhanced I/M program. In such cases, EPA regards enhanced I/M requirements as superseding the basic I/M requirements, and therefore will not require the submission of the basic I/M requirements discussed previously. The EPA will, under section 182(i), require SIP revisions to provide for an enhanced I/M program within 2 years in areas newly subject to enhanced I/M requirements in the future as a result of redesignation or reclassification.

The SIP's for enhanced I/M programs are due no later than November 15, 1992. In the event that EPA's enhanced I/M performance standard is not finalized soon enough to provide sufficient time for full SIP development, EPA will use its authority under section 110(k)(4) to conditionally approve SIP submittals committing to adopt enforceable, enhanced I/M programs consistent with EPA guidance. The guidance will cover the elements of the SIP.

If a moderate nonattainment area fails to attain the CO standard by December 31, 1995, and is reclassified to serious, an enhanced I/M program must be implemented if the area meets the population criterion (urbanized area population, as defined by the Census Bureau, of 200,000 or more). The EPA will, under section 182(i), require SIP revisions to provide for an enhanced I/M program within 2 years of redesignation or reclassification.

As mandated by section 202(m), the Administrator will promulgate regulations requiring manufacturers to install diagnostic systems on all new light-duty vehicles and light-duty trucks. The purpose of these systems is to identify and track emissions-related systems deterioration or malfunction. According to section 202(m)(3), within 2 years of EPA's promulgating regulations requiring States to do so, all States with I/M programs must amend their SIP to provide for inspection of these onboard diagnostics systems. The EPA will issue revised I/M guidance which addresses onboard diagnostic inspections.

(e) *Attainment demonstration.* Section 187(a)(7), "Attainment Demonstration and Specific Annual Emission Reductions," applies to CO nonattainment areas with a design value greater than 12.7 ppm at the time of classification. A demonstration of attainment is required by November 15, 1992, and can be met through application of a modeling analysis, following the guidance contained in EPA "Guideline on Air Quality Models (Revised)."

The attainment demonstration must include a SIP control strategy, which is also due by November 15, 1992. The SIP control strategy for a given nonattainment area must be designed to ensure that the area meets the specific annual emission reductions necessary for reaching attainment by the deadline.

(f) *Tracking plan implementation and milestone compliance.* Section 187(a)(2) requires States containing CO nonattainment areas with design values above 12.7 ppm to submit plans that contain forecasts [13] of VMT for each year before the year in which the plan projects attainment. Subsequently, the States must submit annual updates to those forecasts and report on how accurate the previous forecasts proved to be. The annual reports containing estimates of VMT must be preapred for each year in which a forecast was required. Contingency measures, developed in accordance with section 187(a)(3) (see section III.B.2.(b)), must be implemented if either the annual estimates of actual VMT or any new VMT forecasts exceeds the earlier forecasts included in the State plan, considering the tolerance discussed above. The first annual reports for CO areas (with design values above 12.7 ppm) must be submitted to EPA within 9 months after the first full calendar year after the attainment demonstration is due (i.e., the reports must be submitted by September 1994). These reports must contain estimates of actual VMT in the previous year, forecasts of VMT in future years, and verification that contingency measures are being implemented if the actual VMT estimates for the previous year or any new VMT forecasts for any year until the attainment year exceed any earlier forecasts in the State plan. The reports must also show that the control strategies are being implemented as projected in the plan. The EPA wants to use the annual reports to ensure that VMT forecasts are consistent with VMT estimates. Furthermore, a serious CO nonattainment area must demonstrate by March 31, 1996 that it has "achieved a reduction in emissions of CO equivalent to the total of the specific annual emission reductions required by December 31, 1995" (section 187(d)(1)—Milestone Demonstration).

(g) *NSR.* All CO nonattainment areas with a design value greater than 12.7 ppm part D NSR programs meeting sections 172(c)(5) and 173 requirements not later than November 15, 1992, in accordance with section 187(a)(7).

3. Serious Areas

(a) *Major stationary source definition.* As specified in section 187(c)(1), for serious CO nonattainment areas in which stationary sources contribute significantly to CO levels (determined according to guidance issued in the May 13, 1991 memorandum from William Laxton, Director, Technical Support Division, to Regional Air Division Directors), a SIP shall be submitted by November 15, 1992 that provides that the term "major stationary source" includes any stationary source that emits or has the potential to emit 50 tons per year or more of CO. If such determination is not made by EPA under section 187(c)(1), then "major stationary source" includes any stationary source that emits or has the potential to emit 100 tons per year or more of CO.

(b) *TCM's equivalent to severe ozone TCM's.* Serious CO areas (and Denver, Colorado) must adopt and implement

[13] Guidance for preparing the forecasts of VMT is contained in the section 187 VMT Forecasting and Tracking Guidance.

enforceable TCM's in conjunction with other control measures necessary to comply with the periodic emissions reduction requirements of the 1990 CAAA. The TCM's, which are required to offset any growth in emissions from growth in VMT and number of vehicle trips and to achieve necessary reductions in mobile source emissions, are due by November 15, 1992. States should choose from the list of TCM's and other measures in section 108(f). These requirements are contained in section 187(b)(2) for CO areas and section 187(a)(2)(B) for Denver. See section III.A.5.(d) above (severe ozone TCM's) for a discussion of how to calculate growth in emissions from growth in VMT.

All serious CO areas covered by the clean-fuel vehicle fleet program (except for areas in New York State, should any such area ultimately be bumped to serious), as well as Denver, must explain why any section 108(f) measure is not adopted, what proposed emission reduction measures will provide comparable reductions, or why such reductions are not necessary to attain the CO NAAQS. This requirement may be met by an attainment demonstration using EPA modeling techniques that shows the other adopted control measures are sufficient to provide for attainment by the required date.

This requirement must be met by any serious CO area meeting the section 246 definition of "covered area." Section 246 defines "covered areas" as areas with a CO design value of 16 ppm or greater, excluding those areas in which mobile sources do not contribute significantly to CO exceedances. Of the three existing areas with CO design values above 16 ppm, EPA anticipates that one (the Steubenville, Ohio area) may be able to show that mobile sources do not contribute significantly to CO exceedances. Thus, at the minimum, this requirement would apply to the Denver and Los Angeles areas. Areas that are not "covered areas" are not required by this provision to justify their rejection of TCM's.

(c) *Clean-fuel vehicle fleet program.* Section 246(a)(2)(B) requires that all CO nonattainment areas with 1980 populations of 250,000 or more and design values of 16.0 ppm or higher, submit SIP revisions providing for clean-fuel vehicle fleet programs by May 15, 1994 (42 months from enactment).

The programs must require a specified percentage of fleet vehicles in model year 1998 and thereafter to be clean-fuel vehicles that use only clean alternative fuels when operating in the area. For light-duty vehicles and light-duty trucks, the required percentage must be 30 percent in 1998, 50 percent in 1999, and 70 percent in 2000 and thereafter. For heavy-duty trucks, the percentage must be 50 percent in each such year. Light-duty vehicles and light-duty trucks in fleets participating in this program for these model years must also meet the title II clean-fuel vehicle standards for model year 2001. If light-duty vehicles and light-duty trucks of 6,000 pounds GVWR or less are not available in California before model year 2001, the phase-in schedules will be delayed accordingly.

Some of the major program requirements include the following: That fuel providers make clean alternative fuel available to fleet operators; that Federal fleets (except certain vehicles certified by the Secretary of Defense as needing an exemption based on national security grounds) be included in the program; and that credits consistent with EPA regulations due 1 year from enactment be issued for purchasing more vehicles than required, for purchasing vehicles that exceed the established standards, or for purchasing vehicles prior to the effective date of the program. In addition, certain TCM's may not apply to covered fleet vehicles consistent with EPA regulations.

Areas where mobile sources do not contribute significantly to CO exceedances may be able to obtain a waiver from the clean-fuel program. The reader is referred to the discussion in this preamble that addresses guidance on waivers for mobile source measures, section III.B.7.

Each State subject to the fleet program may submit a SIP revision by November 15, 1992 consisting of fully adopted control measures as a substitute for all or a portion of the clean-fuel vehicle program required by section 246. The substitute measures must demonstrate to the satisfaction of the Administrator that the long-term reductions in CO emissions and toxic substances are, at a minimum, equal to those that would be achieved under the clean-fuel vehicle program or the percentage of the emissions reductions attributable to the portion of the program for which the revision is to substitute. Substitute measures may not include any other measures required by the Act.

(d) *Milestone and attainment failures (economic incentive programs).* Economic incentives and transportation control programs (as described in section 182(g)(4)) are required for serious areas under several different types of failure: Failure to submit a milestone demonstration (as defined in section 187(d)(1)), failure to meet the milestone (section 187(d)(3)), or failure to attain the standard by the applicable attainment date (section 187(g)). In all such cases, the State shall submit a plan revision with such incentives within 9 months of failure. The EPA urges such a State to initiate the development of a program of economic incentives and transportation controls as soon as it can reasonably define the objectives and scope of an appropriate program, without waiting until such a failure occurs. The EPA believes that early initiation is important so as to allow for sufficient time to develop, implement, and evaluate the effectiveness of the program. Economic incentive programs are discussed in more detail in section III.G.3.

(e) *Long-term measures.* The EPA recognizes that some serious CO nonattainment areas (and perhaps areas with long-term attainment dates for other pollutants) will have such large emissions reductions requirements that identifying, developing, and adopting in final form the control measures that represent the areas preferred strategy for their demonstrations of attainment may present an unreasonable burden. The EPA believes that these areas may need additional time to fully develop and adopt certain "long-term" measures that would be the preferred means to reach attainment. These measures would include those that require complex analyses and decision making and coordination among a number of government agencies.

The EPA intends to allow these areas reasonable additional time to complete full development and adoption under the following conditions:

(1) The plan containing the demonstration of attainment must identify each measure for which additional time would be needed for full development and adoption.

(2) The plan must show that the long-term measures cannot be fully developed and adopted by the submittal date for the attainment demonstration.

(3) The plan must contain an enforceable commitment by the relevant agency that development and adoption will occur on an expeditious schedule to achieve specified emission reductions from each long-term measure for each year through the attainment year.

(4) The plan must contain "backstop" measures that would be implemented to achieve equivalent emission reductions unless the long-term measure is adopted on schedule.

(5) The long-term measures must not be needed to meet any emission reduction requirement before December 31, 1995.

The "backstop" measures required under condition 4 must be submitted with the 1992 attainment demonstration in fully adopted form. The "backstop" measures must be designed to go into effect automatically on a schedule sufficient to achieve all of the reductions identified with each long-term measure for each year through the attainment year. The "backstop" measures may represent broad, across-the-board reductions in emissions, rather than thoroughly analyzed and developed control measures. For this reason, EPA does not anticipate the actual implementation of "backstop" measures in most cases, as States will have ample opportunity to submit SIP revisions incorporating the fully developed long-term measures and deleting the "backstop" measures from the SIP. Additionally, if a long-term measure cannot be developed, then the State has the option to submit a SIP revision identifying a fully developed and adopted alternative measure to replace the original long-term measure prior to any necessary implementation of "backstop" measures.

Thus, a State may find that progress can be achieved with measures that are fully developed by the 1992 SIP submittal date. However, the State may determine that expeditious attainment of the NAAQS is impossible unless the SIP also includes measures which cannot be fully developed until after the 1992 SIP is due. In its 1992 SIP submittal, the State must clearly describe each of these long-term measures and show that each measure cannot be fully developed and adopted until a specified future date, despite expeditious implementation efforts. The 1992 SIP must include with each long-term measure an enforceable schedule, binding responsible agencies to achieve identified emissions reductions from each measure.

Along with these provisions, the State's 1992 SIP submittal must include "backstop" measures. The "backstop" measures must be fully adopted and scheduled for implementation to achieve reductions equivalent to those assigned each year by the long-term measures. When each long-term measure is fully developed, it must be submitted to EPA as a SIP amendment. This amendment would also propose deletion of the associated "backstops." The EPA's approval of the long-term measures would also rescind from the SIP, the "backstop" measures.

4. "Not Classified" Nonattainment Areas

(a) *General.* Nonclassifiable CO areas consist of "not classified" areas. The EPA describes areas as "not classified" if they were designated nonattainment both prior to enactment and (pursuant to section 107(d)(1)(C) at enactment, and if they did not violate the primary NAAQS for CO in either year for the 2-year period 1988 through 1989.

Although it seems clear that the CO-specific requirements of subpart 3 of part D do not apply to CO "not classified" areas, the 1990 CAAA are silent as to how the requirements of subpart 1 of part D, which contains general SIP planning requirements for all designated nonattainment areas, should be interpreted for such CO areas. Nevertheless, because these areas are designated nonattainment, some aspects of subpart 1 necessarily apply. The EPA interprets the requirements under section 172(c) for these areas below. Applicable revisions to the SIP are due 3 years from designation under section 107(d) (see 56 FR 56694).

(1) *RACM.* Reasonably available control measures are required for areas needing to achieve attainment. Because "not classified" areas may be already attaining or are presumably very near attainment, the EPA believes that additional RACM controls beyond what may already be required in the SIP are not necessary to achieve attainment and are therefore not required.

(2) *Attainment demonstration.* Section 187(a)(7) specifically exempts moderate areas with design values less than 12.7 ppm from requiring an attainment demonstration. Because these moderate areas are exempt from this requirement, it would seem unreasonable to subject this requirement to an area that was not violating the standard. Therefore, EPA will presume that the existing SIP requirements and any existing and future Federal requirements (e.g., the title II rules) will be sufficient to provide for attainment in these areas.

(3) *RFP.* A RFP requirement assumes a long nonattainment period. The fact that a "not classified" area is already in or near attainment obviates the need for an RFP requirement.

(4) *Emissions inventory.* An emissions inventory is specifically required under this section and is not tied to an area's proximity to attainment. Moreover, even if these areas are already attaining or near attainment, they will need such an inventory to develop an approvable maintenance plan under section 175A. Therefore, an emissions inventory must be included in the SIP revision due 3 years from designation.

(5) *NSR.* Like the emissions inventory requirement, the NSR requirement is not tied to an area's proximity to attainment, and therefore exempting a nonattainment area from the NSR requirements is not allowed by the Act. Furthermore, the new NSR program is one of the Act's major bulwarks for preventing further deterioration of the Nation's air quality. Therefore, all nonattainment areas, including "not classified" areas, are required to adopt NSR programs meeting the requirements of section 173, as amended.

(6) *Monitoring.* Section 172 (b) and (c) explicitly states that nonattainment areas should meet the "applicable" monitoring requirements of section 110(a)(2).

(7) *Contingency measures.* Contingency measures are not required for "not classified" areas in light of the fact that moderate areas with a design value less than 12.7 ppm are exempt from the contingency measures requirement.

(b) *Attainment dates for "not classified" areas.* Section 172(a)(2) requires an attainment date of no later than 5 years from an area's designation as nonattainment. For areas designated nonattainment under section 107(d)(1)(C)(i) (pre-enactment nonattainment areas), the attainment date is November 15, 1995. For newly designated areas, the attainment date will be 5 years from the effective date of the nonattainment designation. For areas that fail to attain in 5 years, EPA is considering one or more of the following actions:

(1) If an area fails to attain 5 years from designation, the area is bumped up to moderate if the area's design value is at least 9.1 ppm.

(2) If an area fails to attain 5 years from designation the area retains its "not classified" status, but EPA will tighten Subpart 1 requirements. This could include a showing of enforceable rules or possibly a basic I/M program.

(c) *"Not classified" CO areas.* Violations are determined by the number of nonoverlapping exceedances greater than or equal to 9.5 ppm during the 2-year period 1988–1989. If the number of exceedances in either year was greater than or equal to 2, the area is violating the CO NAAQS.

Once it has been established that the area is violating the standard, the highest second-highest, nonoverlapping 8-hour measured value over the 2-year period is the design value for the area. The design value determines classification. A CO area cannot be classified submarginal because a design value of <9.5 ppm is not violating the standard (i.e., there are less than two exceedances in each of the 2 years), and an area can only be submarginal if it is violating the standard.

(1) *Requirements.* The CO areas termed "not classified" are analogous to ozone transitional areas. The amended Act does not provide guidance in subpart 3 for CO areas that fall into the "not classified" category. However, all nonattainment areas, including "not classified" areas, are subject to several of the requirements in subpart 1 of the Act as discussed above. Specifically, section 172(b) requires a SIP revision within 3 years of designation. The SIP revision must meet several requirements, in particular, NSR.

If a State submits a request for redesignation to attainment, then a proper and adequate maintenance plan as defined in section 175A, is required. The Administrator announced in the November 6, 1991 Federal Register those CO nonattainment areas that did not violate the NAAQS during the 24-month period between January 1, 1988 and December 31,1989. For such areas, the requirements under subpart 3 do not apply.

In order to be redesignated to attainment, a "not classified" area must provide documentation to support the conclusion that the five redesignation requirements of section 107(d)(3)(E) have been met. For a discussion of the specific State actions required for satisfying these five redesignation requirements, see "Redesignations" under section III.H5 of this notice.

(2) *NSR.* By November 15, 1993, all such "not classified" areas must submit rules to implement the new part D NSR permit requirements of sections 172(c)(5) and 173 of the 1990 CAAA. In the meantime, all existing NSR rules will remain in effect. If the area does not have an approved part D NSR permitting program and a State wishes to issue a permit for a major stationary source or major modification in such area during the interim period, the State permitting program should comply with the requirements in 40 CFR part 51, appendix S, until the new part D NSR requirements become effective.[14]

(3) *Failure to attain.* If a "not classified" area violates the NAAQS at some time in the future, then it will be classified in accordance with Table 3, section 186(2). Upon classification, the area will continue to be subject to the requirements under subpart 1 and those specific provisions under subpart 3 appropriate to the classification that would have applied to the area had it been so classified at the time of the notice under section 186(a)(2). Under section 187(f), the Administrator may adjust any applicable deadlines (other than attainment dates) if the deadlines are shown to be infeasible.

5. Multi-State CO Nonattainment Areas

Section 187(e) defines a "multi-State CO nonattainment area" as a single CO nonattainment area that covers more than one State. Section 187(e) also establishes certain requirements for such areas. First, each State in a multi-State CO nonattainment area must take all reasonable steps to coordinate both the SIP revisions required and the implementation of SIP's that apply in the given nonattainment area. Section 187(e) also prevents EPA from approving any SIP revision submitted under this section if a State has failed to meet the above requirements.

Finally, section 187(e)(2) allows a State that fails to provide a demonstration of attainment for that State's portion of a multi-State CO nonattainment area to petition EPA to make a finding that such State could have demonstrated attainment, but for the failure of one or more other States in the area to adequately implement measures required under section 187 for the given area. If EPA makes such a finding, then the sanctions provisions under section 179 for failure to make an adequate attainment demonstration shall not apply to the State awarded the finding.

Pursuant to section 187(e)(1), EPA is calling on each multi-State CO nonattainment area to develop a joint work plan as evidence of early cooperation and integration. The work plan must include a schedule for developing the emissions inventories, the VMT forecasts, and the attainment demonstration for the entire multi-State area. Each State within a multi-State CO nonattainment area is responsible for meeting all the requirements relevant to the given area.

In order to be sufficient to avoid a section 187(e)(2) finding of failure to demonstrate attainment, an attainment demonstration must meet the requirements in section 187(a)(7). Refer to section III.B.3.(e) for guidance on developing attainment demonstrations. Note that moderate multi-State CO nonattainment areas with a design value of 12.7 ppm or lower at the time of classification are not required to meet the requirement of developing an attainment demonstration since section 187(a) excludes all such areas from any requirement for attainment demonstrations.

6. Areas With Significant Stationary Source Emissions

Section 187(c)(3) calls for the Administrator to issue guidelines and rules for determining whether stationary sources contribute significantly to CO levels in an area. In the case of a serious area in which stationary sources contribute significantly to CO levels, section 187(c)(1) requires the State to revise the definition of major stationary source in that area to include any stationary source that emits, or has the potential to emit, 50 tons per year or more of CO.

Guidance on the definition of a significant CO stationary source area is available in an EPA memorandum dated May 13, 1991, from William G. Laxton, Director, Technical Support Division, regarding "Guidance for Determining Significant Stationary Sources of Carbon Monoxide." The guidance defines a significant CO stationary source area through the use of the results of dispersion modeling of one or more stationary sources of CO in the area. The reader should refer to that guidance for further information.

7. Guidance on Waivers for Mobile Source Measures

The waiver provisions of section 187(c)(2) provide the Administrator with discretionary authority to waive certain mobile source requirements in both moderate and serious CO nonattainment areas where mobile sources do not contribute significantly to CO levels in the area. Specifically, the Administrator may on a case-by-case basis waive any requirements that pertain to transportation controls, I/M, or oxygenated fuels where the Administrator determines by rule that mobile source contribution is convincingly demonstrated to be insignificant in relation to the cause of the area's overall CO problem. The EPA will only consider granting a waiver from controls on mobile CO sources under section 187(c)(2) if it is clear that mobile sources in the aggregate do not

[14] If a "not classified" area has not recorded any violations by December 31, 1991, and is in the process of developing a maintenance plan per section 175A, then EPA may not require nonattainment NSR rules. However, these areas must continue to apply their existing NSR program or comply with the NSR permitting requirements of 40 CFR part 51, appendix S. Prior to redesignation, these areas also must adopt and be prepared to implement a permitting program that satisfies the requirements of part C and EPA's regulations implementing the PSD program. Areas should consider the need for offsets under the part C program to ensure that new sources do not "cause or contribute" to an increase in pollutant levels that would take the area out of compliance. If the area is found to be out of compliance and the statutory deadlines for adopting amended part D permitting rules for the pollutant in question have passed, EPA may impose a contruction ban pursuant to section 113(a)(5) until such time as the area adopts a part D program satisfying the NSR requirements of the CAAA.

contribute significantly to the CO nonattainment problem, and there is a SIP submittal demonstrating attainment of the CO NAAQS by the required date without such mobile source controls. This would be in addition to a showing under section 187(c)(3) pertaining to stationary sources that "contribute significantly to carbon monoxide levels in the area." The attainment demonstration should use EPA-approved modeling techniques; i.e., a complete modeling analysis is needed, considering point, area, and mobile source emissions. The waiver would be granted upon approval of the CO SIP. The waiver of mobile source measures would no longer apply if a subsequent maintenance plan demonstration relied on such mobile source measures.

C. Particulate Matter

1. Statutory Background

(a) *Designations.* On the date of enactment of the 1990 CAAA, PM–10 areas meeting the qualifications of section 107(d)(4)(B) of the amended Act were designated nonattainment by operation of law. These areas included all former Group I areas identified in 52 FR 29383 (August 7, 1987) and clarified in 55 FR 45799 (October 31, 1990), and any other areas violating the PM–10 NAAQS prior to January 1, 1989 (many of these areas were also identified in the October 31, 1990 Federal Register notice). All other areas were designated unclassifiable. A Federal Register notice announcing all of the areas designated nonattainment for PM–10 at enactment of the 1990 CAAA and classified as moderate was published in 56 FR 11101 (March 15, 1991). A subsequent notice correcting certain information in the March 15, 1991 notice was published in 56 FR 37654 (August 8, 1991). Subsequent to the 1990 CAAA enactment date, EPA may redesignate any of these unclassifiable areas to nonattainment in accordance with section 107(d)(3). On April 22, 1991 EPA announced in 56 FR 16274 that it had initiated the redesignation process for 16 areas.

(b) *Classifications and attainment dates.* Once an area is designated nonattainment, section 188 of the amended Act outlines the process for classification of the area and establishes the area's attainment date. In accordance with section 188(a), at the time of designation, all PM–10 nonattainment areas are initially classified as moderate by operation of law. A moderate area can subsequently be reclassified as serious either before the applicable moderate area attainment date, if at any time EPA determines the area cannot "practicably" attain the PM–10 NAAQS by this attainment date; or following the passage of the applicable moderate area attainment date, if EPA determines the area has failed to attain (see section 188(b)).

For those areas which were designated nonattainment upon enactment of the 1990 CAAA by operation of law, where EPA determines that the area cannot "practicably" attain the NAAQS by December 31, 1994, the amended Act specifies certain dates by which EPA must propose to reclassify appropriate moderate areas as serious (see 56 FR 58658, November 21, 1991) and take final action. The EPA also has discretionary authority under section 188(b)(1) to reclassify any of these areas as serious at any time, if EPA determines they cannot practicably attain the PM–10 NAAQS by December 31, 1994.[18] The EPA may exercise this discretion where, for example, EPA originally believed an area could attain the PM–10 NAAQS by December 31, 1994 but later determines that it cannot attain. For example, EPA may find an area cannot practicably attain by December 31, 1994 after reviewing the November 15, 1991 SIP submittal for an area. Or, if a State fails to submit a PM–10 SIP for an area, EPA could conclude that the area could not practicably attain the standards by the applicable attainment date based, for example, on the severity of the nonattainment problem, the feasibility of controls, and other pertinent factors. Any decision by EPA to reclassify an area as serious will be based on facts specific to the nonattainment area at issue and will only be made after providing notice in the Federal Register and an opportunity for public comment on the basis for EPA's proposed decision.

The EPA does not believe that reclassifying moderate areas as serious at any time EPA determines that an area cannot practicably attain the standards by the applicable attainment date, rewards areas who delay development and implementation of PM–10 control measures. Rather, EPA believes its policy creates an incentive for the timely submittal and effective implementation of moderate area SIP requirements and facilitates the PM–10 attainment objective. For example, if an area that fails to submit a timely moderate area SIP is reclassified, this does not obviate the requirement that the area submit and implement RACM consistent with the moderate area schedule. Accordingly, the area could be subject to sanctions for its delay in submitting the RACM SIP requirement (see sections 110(m) and 179). Further, reclassification before the applicable attainment date will ensure that additional control measures (i.e. in addition to RACM, serious areas must implement best available control measures (BACM), are implemented sooner and will expedite the application of more stringent new source review requirements to the area (see sections 188(b)(1) and 189(b)(3)). Similarly, where an area submits a timely moderate area SIP, EPA may not discover that the area cannot practicably attain until some time after it begins implementing its moderate area control measures. The EPA then may want to reclassify the area in order to facilitate the development and implementation of BACM. Finally, a reclassified area must demonstrate attainment "as expeditiously as practicable" and no later than specified dates (see section 188(c)(2)). Accordingly, EPA may reclassify an area and conclude that the most expeditious attainment date practicable for the area is a time prior to the latest possible attainment deadline.

For areas designated nonattainment after enactment of the 1990 CAAA, EPA must reclassify appropriate areas as serious within 18 months of the required submittal date for the moderate area SIP. Taken together with the statutory requirement that these SIP's be submitted 18 months after being designated nonattainment, the statute thus requires that EPA reclassify the appropriate moderate area as serious within 3 years of the nonattainment designation.

Finally, in those cases where EPA determines that an area has failed to

[18] One commenter questioned whether EPA has discretionary authority to reclassify an area "at any time" EPA determines the area cannot practicably attain the PM–10 standards by the applicable moderate area attainment date. Under the plain meaning of the terms of section 188(b)(1) EPA has general discretion to reclassify at any time before the applicable attainment date any area EPA determines cannot practicably attain the standards by such date. Accordingly, section 188(b)(1) is a general expression of delegated rulemaking authority. In addition, subparagraphs (A) and (B) of section 188(b)(1) mandate that EPA reclassify at specified timeframes any areas it determines appropriate for reclassification at those dates. These subparagraphs do not restrict the general authority but simply specify that, at a minimum, it must be exercised at certain times. This interpretation furthers the overarching purpose of the statute in that reclassification would expedite the application of additional control measures in the situation where EPA finds, after the mandated reclassification rulemaking and before the applicable attainment date, that an area cannot practicably attain the standards. This, in turn, would expedite ultimate attainment of the PM–10 standards. In summary, EPA believes it is a reasonable interpretation and consistent with the plain language of the statute to construe section 188(b)(1) such that it authorizes EPA to reclassify an area, as appropriate, at any time before the applicable attainment date and mandates that, at a minimum, EPA make this inquiry at specified times.

attain the NAAQS by the applicable attainment date, the area is reclassified as serious by operation of law. The EPA must publish a notice in the Federal Register of such determinations and consequent reclassifications within 6 months following the applicable attainment date.

Since this General Preamble addresses only the control measures recommended for moderate PM–10 nonattainment areas, the following discussion has been limited to the attainment dates for moderate nonattainment areas. Section 188(c)(1) of the amended Act specifies that the initial moderate nonattainment areas (those designated nonattainment upon enactment of the 1990 CAAA) are to attain the PM–10 NAAQS as expeditiously as practicable but no later than December 31, 1994, unless they are reclassified as serious (as described above). Areas designated nonattainment after enactment of the 1990 CAAA and classified as moderate must attain the PM–10 NAAQS as expeditiously as practicable but no later than the end of the sixth calendar year after the area's designation as nonattainment.

(c) *General SIP requirements.* As discussed above, States must develop and submit a SIP providing for the attainment of the PM–10 NAAQS for every area designated nonattainment and classified as moderate for PM–10 under the amended Act. Under section 189(a)(2), States must submit a SIP revision (e.g. RACM/RACT and attainment demonstration) for the moderate PM–10 areas designated nonattainment upon enactment of the 1990 CAAA by November 15, 1992. The NSR program provisions for these areas are due June 30, 1992. States must submit SIP's for those PM–10 areas designated nonattainment after enactment of the 1990 CAA within 18 months of these areas' being designated nonattainment for PM–10.

The specific PM–10 SIP requirements applicable to moderate nonattainment areas are set forth in the PM–10 subpart (subpart 4 of part D, title I). These requirements include section 189(a) (NSR permit program, attainment demonstration, and RACM/RACT); section 189(c) (quantitative milestones); and section 189(e) (PM–10 precursors). The SIP's for moderate PM–10 nonattainment areas must also meet the general provisions applicable to nonattainment areas set forth in subpart 1 of part D, title I of the amended Act to the extent that these provisions are not otherwise subsumed by, or integrally related to, the more specific PM–10 requirements. Whenever possible during this discussion of PM–10, EPA has clarified the relationship between subparts 1 and 4. All SIP's must also meet the applicable regulatory requirements set forth in 40 CFR part 51 except to the extent those requirements are inconsistent with the amended Act.[16] The EPA will provide guidance at a later date for those SIP requirements not addressed in this General Preamble. The discussion below is intended to provide additional background on some of the statutory requirements for moderate PM–10 nonattainment area SIP's and, in some cases, to provide guidance on these statutory requirements.

(d) *NSR permit program.* Section 189(a)(1) of the amended Act provides that for the purpose of meeting the requirements of section 172(c)(5), each State with a PM–10 nonattainment area classified as moderate must submit an implementation plan which contains a permit program meeting the requirements of section 173 for the construction of new and modified major stationary sources of PM–10 (and in some cases PM–10 precursors). For the initial moderate PM–10 nonattainment areas designated according to section 107(d)(4), States must submit the NSR permit program SIP revision to EPA by June 30, 1992. For PM–10 nonattainment areas designated after enactment of the 1990 CAAA, States must submit a SIP containing the NSR permit program within 18 months after designation of each affected area. The EPA intends to issue proposed regulations for the NSR program SIP's. However, in today's General Preamble, EPA has provided guidance on the NSR permit program requirements which is intended to assist States in developing and timely submitting their June 30, 1992 NSR SIP revision for the initial moderate PM–10 nonattainment areas, and any NSR SIP revision submittal due for any additional areas designated nonattainment for PM–10 before the NSR regulations are finalized.

(1) *Moderate areas.* To meet the requirements of section 172(c)(5), States must implement a permit program that meets all the permit requirements of section 173 for the construction and operation of new and modified major stationary sources of PM–10. As defined in section 302(j), the term major stationary source means any stationary source which directly emits, or has the potential to emit, 100 tons per year or more of PM–10. The emissions offset ratio for such sources is equal to or grater than 1:1 as specified in section 173(c).

Section 189(e) makes the control requirements applicable to major stationary sources of PM–10 also applicable to major stationary sources of PM–10 precursors. For the purposes of implementing the requirements of section 189(e), precursors of secondarily-formed PM–10 may include VOC's which form secondary organic compounds, SO_2 which form sulfate compounds, and NO_x which form nitrate compounds. Therefore, the control requirements applicable under PM–10 SIP's for major stationary sources of PM–10 shall also apply to major stationary sources of these potential precursors, except where the Administrator determines that such sources do not significantly contribute to PM–10 levels that exceed the PM–10 ambient standards in the area. The Act leaves unaddressed the question of whether each specific PM–10 precursor should be considered together or independently in determining major source size and the applicability of section 173 (e.g., permit requirements). However, with respect to ozone, EPA's practice has been to consider each specific ozone precursor independently when making similar determinations. Accordingly, EPA proposes to treat PM–10 precursors analogous to ozone precursors and also consider each specific precursor independently when determining source size and whether section 173 provisions apply. Nothing in this guidance, however, would preclude a State from adopting a stricter standard and, thus, proposing to consider all specific PM–10 precursors together.

(2) *Serious areas.* Section 189(b)(3) defines the terms "major source" and "major stationary source" to include any stationary source or group of stationary sources located within a contiguous area and under common control that emits, or has the potential to emit, at least 70 tons per year of PM–10. Such new and modified major stationary sources that emit PM–10 are subject to the permit requirements of section 173 and the PM–10 precursor provisions of section 189(e).

(e) *Attainment demonstration.* Section 189(a)(1)(B) provides that States with moderate PM–10 nonattainment areas must submit a demonstration (including air quality modeling) showing attainment by the applicable attainment date. Alternatively, the State must show

[16] The 1990 CAAA includes a General Savings Clause (see section 193) which provides that regulations (or guidance, etc.) in effect before the enactment of the 1990 CAAA shall remain in effect after enactment. However, the Savings Clause also provides that such regulations (or guidance, etc.) shall remain in effect "except to the extent otherwise provided under this Act, inconsistent with any provision of this Act, or revised by the Administrator," *Id.*

that attainment by the applicable date is impracticable. This SIP submittal is due on November 15, 1992 for the moderate areas designated nonattainment for PM-10 at enactment of the 1990 CAAA and within 18 months for those moderate areas designated nonattainment after enactment of the 1990 CAAA. As a necessary adjunct to the demonstration of attainment, the SIP submittal must contain a comprehensive, accurate, current inventory of actual emissions from all sources of PM-10 in the area, as prescribed in section 172(c)(3).

In general, attainment demonstrations for the initial moderate nonattainment areas should follow the existing modeling guidelines addressing PM-10 (e.g., "PM-10 SIP Development Guideline" (June 1987); "Guideline on Air Quality Models"-(Revised); memorandum from Joseph Tikvart and Robert Bauman dated July 5, 1990) and any applicable regulatory requirements. The EPA also has developed a supplemental attainment demonstration policy that may be followed for initial moderate PM-10 nonattainment areas facing special circumstances. That policy statement is provided in appendix C5. Attainment demonstrations for moderate areas designated after enactment of the 1990 CAAA will be reviewed in accordance with the general guidance addressing PM-10, cited above, and any other applicable EPA guidance or regulations. The supplemental policy also noted above will not apply to these areas.

(f) *RFP/quantitative milestones.* The PM-10 nonattainment area SIP's must include quantitative emissions reductions milestones which are to be achieved every 3 years and which demonstrate RFP, as defined in section 171(1), until the area is redesignated attainment (section 189(c)). Under the milestone requirement, the States must demonstrate to EPA that the SIP measures are being implemented and the milestones have been met, within 90 days after the milestone due date. The EPA must then determine whether or not the State's demonstration is adequate, within 90 days of receiving the demonstration.

Under section 189(c), the State is required to submit a SIP revision if it fails to submit the quantitative milestone demonstration, or EPA determines that a milestone was not met. The SIP revision is due within 9 months of either the missed reporting date or EPA's determination that a milestone was missed. The SIP revision must assure that the State will achieve the next milestone by the applicable date and/or meet the PM-10 attainment date if there is no next milestone.

There is a gap in the law that the text of section 189(c) does not articulate the starting point for counting the 3-year period. The EPA believes it is reasonable to begin counting the 3-year milestone deadline from the due date for applicable implementation plan revisions containing the control measures for the area. The EPA believes it is reasonable to key the milestone clock to the SIP revision containing control measures which will give rise to emission reductions. Further, control measures must be implemented in less than 3 years after the SIP revision containing them is required to be submitted. Therefore, it is reasonable to expect that some reduction in emissions will have occurred 3 years after the SIP revision due date. The EPA believes that measuring the 3-year period from the SIP revision due date is also reasonable. Essentially, EPA believes it would be unreasonable to begin counting the 3-year period whenever the SIP revision is submitted, in disregard of its due date. The statute contains specific SIP submittal and attainment deadlines. These deadlines and the framework they set up inform EPA's interpretation of this requirement. Here, EPA believes that the law contemplates that some improvement in air quality be made between the SIP submittal due date and ensuring 3-year increments. Further, to begin counting from the date of actual SIP submittal and not its due date would allow those States that submit SIP's late to defer meeting their quantitative milestones and, consequently, to defer making RFP toward attainment of the PM-10 standard. Thus, the first quantitative milestone deadline for the initial PM-10 moderate nonattainment areas is November 15, 1994; 3 years after November 15, 1991 when SIP revisions containing RACM (including reasonably available control technology) are due for these areas.

For the initial PM-10 moderate nonattainment areas, the emissions reductions progress made between the SIP submittal (due date of November 15, 1991) and the attainment date of December 31, 1994 (only 46 days beyond the November 15, 1994 milestone date) will satisfy the first quantitative milestone. The de minimis timing differential makes it administratively impracticable to require separate milestone and attainment demonstrations. Thus, EPA's policy is to deem that the emissions reductions progress made between the SIP submittal due date and the attainment date will satisfy the quantitative milestone requirement for these areas. This is consistent with the purpose of the milestone requirement which is to "provide for emission reductions adequate to achieve the standards by the applicable attainment date" (H.R. Rep. No. 490, 101st Cong., 2d Sess. 267 (1990)). However, the Administrator is required to determine within 6 months after the applicable attainment date whether a nonattainment area has attained the standards (sections 179(c) and 188(b)(2)). Therefore, consistent with the milestone requirement, within 90 days after the attainment date, States must demonstrate that the SIP has been implemented and the area has attained the standards or alternatively, qualifies for a 1-year extension of the attainment date (section 188(d)). The EPA will issue future guidance on the RFP/quantitative milestone requirements for those areas designated moderate PM-10 nonattainment after enactment of the 1990 CAAA and for the serious PM-10 nonattainment areas.

(g) *PM-10 precursors.* Section 188(e) provides that the applicable control requirements under PM-10 nonattainment area SIP's in effect for major stationary sources of PM-10 are also applicable to major stationary sources of PM-10 precursors, except where EPA determines that the sources of PM-10 precursors do not contribute significantly to PM-10 levels which exceed the PM-10 NAAQS in the area. This determination will be based upon air quality analysis in which States assess the contribution of precursors. The contribution of precursors may be nonexistent. Alternatively, if precursors do contribute to nonattainment, States will need to consider both the source-receptor relationship and the significance of precursor contributions to overall nonattainment. Factors which may be considered in determining the source-receptor relationship include source mix and density, nonattainment area size, meteorology, and topography. In making a determination regarding significance and the need to control precursors in a specific area, EPA will rely in part on the technical information contained in the State's submittal, including filter analysis, the relative contribution of precursors to overall nonattainment, and the State's RACT/RACM strategy, among other factors. States, however, are encouraged to submit additional material for consideration, with all findings made on a case-by-case basis due to the high degree of variability among nonattainment areas. There will be variability, for example, in the characteristics of the area-wide

nonattainment problem in Spokane, Washington, which may warrant a finding of significance that differs from that made for a point source in Clairton, Pennsylvania. The EPA is required to issue guidance on this requirement. This General Preamble contains a lengthy discussion on control requirements for PM–10 precursors in moderate nonattainment areas and is intended to satisfy the requirement for guidance to the extent such guidance is required for moderate area SIP's having control requirements applicable to major stationary sources of PM–10. The EPA intends to provide additional guidance, if necessary, on control requirements for major stationary sources of PM–10 precursors when it issues proposed regulations for the NSR permit program applicable to PM–10 nonattainment areas, and when it issues guidance on the control technology requirements applicable to major stationary sources in serious PM–10 nonattainment areas.

(b) *RACM/RACT.* Section 189(a)(1)(C) of the amended Act requires that moderate area SIP's contain "reasonably available control measures" for the control of PM–10 emissions. Section 172(c)(1) of the amended Act, in turn, provides that RACM for nonattainment areas shall include "such reductions in emissions from existing sources in the area as may be obtained through the adoption, at a minimum, of reasonably available control technology * * *." Thus, read together, these provisions require that moderate area PM–10 SIP's include RACM and RACT for existing sources of PM–10 emissions.

Under section 189(a) (1), (2) of the amended Act, initial moderate PM–10 nonattainment areas (i.e., those areas designated nonattainment upon enactment of the 1990 CAAA) must submit SIP's containing RACM/RACT control measures by November 15, 1991, and these SIP's must provide for the implementation of RACM/RACT no later than December 10, 1993. Those areas designated nonattainment and classified as moderate after enactment of the 1990 CAAA must submit SIP's containing RACM/RACT control measures 18 months after the nonattainment designation (see section 189(a)(2)(B)). These SIP's must provide for the implementation of RACM/RACT no later than 4 years after the affected areas are designated nonattainment, which is 30 months after the applicable SIP submittal deadline (see section 189(a)(1)(C)).

Note that serious area control requirements are briefly described here as background for subsequent discussion regarding the relationship between moderate and serious area control measures. As discussed above, moderate PM–10 nonattainment areas may be reclassified as serious. Pursuant to section 189(b), States having areas that are reclassified as serious must submit SIP's for the areas containing BACM which includes "the application of best available control technology to existing stationary sources" (H.R. Rep. No. 490, 101st Cong. 2d Sess. 267 (1990)).[17] The SIP's containing BACM/BACT provisions must be submitted within 18 months after the affected area is reclassified as serious (see section 189(b)(2)). These SIP's must provide for the implementation of BACM/BACT no later than 4 years after being reclassified, which is 30 months after the BACM/BACT submittal is due (see section 189(b)(1)(B)).

Under section 190, EPA must issue technical guidance for RACM and BACM by May 15, 1992 for three area source categories: Urban fugitive dust, residential wood combustion, and prescribed silvicultural and agricultural burning. This General Preamble satisfies EPA's obligation to issue guidance on RACM for these source categories. This guidance also updates previously-issued guidance regarding RACT for large stationary sources. The BACM guidance to facilitate SIP development in serious PM–10 nonattainment areas will be issued at a later date.

In addition to requiring RACM guidance for urban fugitive dust, residential wood combustion, and prescribed silvicultural and agricultural burning, section 190 requires that EPA examine other source categories contributing to nonattainment of the PM–10 NAAQS, determine if additional guidance for RACM and BACM is needed, and issue any such guidance by November 15, 1993. This document provides RACM guidance for sources of fugitive dust (including urban), residential wood combustion, and prescribed burning (including silvicultural and agricultural). The EPA believes, at this time, that these categories of sources are contributing to nonattainment of the PM–10 NAAQS. To the extent that these categories of sources are broader than, or in addition to, those expressly identified in section 190, the Administrator is by today's notice, determining that RACM guidance should be issued for these sources and is issuing such guidance. Section 190 also requires that EPA take into account the emission reductions achieved or expected to be achieved under title IV and other provisions in "issuing guidelines and making determinations under this section." In deciding whether to issue guidance for the categories of sources addressed in this document and in issuing this guidance, EPA has considered such emission reductions. The EPA does not believe, at this time, that actual or expected reductions from Title IV or other provisions will significantly reduce emissions from these sources. Preliminary guidance on many of the issues addressed herein was issued by EPA staff on April 2, 1991 to facilitate PM–10 SIP development for moderate nonattainment areas.

2. Determination of RACM/RACT

(a) *RACM.* The suggested starting point for specifying RACM in each SIP is the listing of available control measures for fugitive dust, residential wood combustion, and prescribed burning contained in appendices C1, C2, and C3. If a State receives substantive public comment demonstrating through appropriate documentation that additional control measures may well be reasonably available in a particular circumstance, those measures should be added to the list of available measures for that area. The RACM is then determined for the affected area's SIP. While EPA does not presume that these control measures are reasonably available in any or all areas, EPA expects States to prepare a reasoned justification for rejection of any available control measures. If it can be shown that one or more measures are unreasonable because emissions from the sources affected are insignificant (i.e., de minimis), those measures may be excluded from further consideration as they would not represent RACM for that area.[18] The resulting available control measures should then be evaluated for reasonableness, considering their technological feasibility and the cost of control in the

[17] The Act does not expressly define "best available control measures" (including "best available control technology") for PM–10 nonattainment purposes. Guidance on "best available control measures" (including "best available control technology") requirements to facilitate SIP development for serious PM–10 nonattainment areas will be issued by EPA at a later date.

[18] Where the sources affected by a particular measure contribute only negligibly to ambient concentrations that exceed the NAAQS, EPA's policy is that it would be unreasonable and therefore would not constitute RACM to require controls on the source. In this regard, it is worth noting that the inherent authority of administrative agencies to exempt de minimis situations from regulation has been recognized in contexts such as this where an agency is invoking a de minimis exemption as "a tool to be used in implementing the legislative design" [see *Alabama Power Co. v. Costle*, 636 F.2d 323, 360 (D.C. Cir. 1979)].

area to which the SIP applies. In the case of public sector sources and control measures, this evaluation should consider the impact of the reasonableness of the measures on the municipal or other governmental entity that must bear the responsibility for their implementation (e.g., paving of unpaved public roads). It is important to note that a State should consider the feasibility of implementing measures in part when full implementation would be infeasible. The SIP submittal to EPA should contain a reasoned justification for partial or full rejection of any available control measures, including those considered or presented during the State's public hearing process, that explains, with appropriate documentation, why each rejected control measure is infeasible or otherwise unreasonable. When the process of determining RACM for an area is completed, the individual measures should then be converted into a legally enforceable vehicle (e.g., a regulation or permit program) (see sections 172(c)(6) and 110(a)(2)(A)). The regulations or other measures should meet EPA's criteria regarding the enforceability of SIP's and SIP revisions. These criteria were stated in a September 23, 1987 memorandum (with attachments) from J. Craig Potter, Assistant Administrator for Air and Radiation; Thomas L. Adams, Jr., Assistant Administrator for Enforcement and Compliance Monitoring; and Francis S. Blake, General Counsel, Office of the General Counsel, entitled "Review of State Implementation Plans and Revisions for Enforceability and Legal Sufficiency." As stated in that memorandum, SIP's and SIP revisions which fail to satisfy the enforceability criteria should not be forwarded for approval. If they are submitted, they will be disapproved if, in EPA's judgment, they fail to satisfy applicable statutory and regulatory requirements.

The technical guidance that discusses in detail the suggested initial measures in appendices C1, C2, and C3 and that a State should consider in determining which of the measures in appendices C1, C2, and C3 are technically feasible and economically reasonable in a particular area is contained in four documents: "Control of Open Fugitive Dust Sources," (EPA–450/3–88–008) September 1988; "Guidance Document for Residential Wood Combustion Emission Control Measures," (EPA–450/2–89–015) September 1989; "Prescribed Fire Smoke Management Guide" (NFES No. 1279), February 1985; and "Prescribed Fire Plan Guide" (NFES No. 1939), August 1986. These documents have been in use for several years and are based on substantial input from State and local agencies, trade groups and associations, and control experts. "Control of Open Fugitive Dust Sources" may serve as an example in analyzing control costs for a given area. Copies of these documents may be obtained by contacting National Technical Information Service, 5285 Port Royal Road, Springfield, Virginia 22161.

(b) *RACT.* This guidance follows EPA's historic definition of RACT as the lowest emission limitation that a particular source is capable of meeting by the application of control technology that is reasonably available considering technological and economic feasibility.[19] The RACT applies to the "existing sources" of PM–10 stack, process fugitive, and fugitive dust emissions (e.g., haul roads, unpaved staging areas) (see section 172(c)(1)). The EPA recommends that major stationary sources be the minimum starting point for RACT analysis. Generally, EPA recommends that available control technology be applied to those existing sources in the nonattainment area that are reasonable to control in light of the attainment needs of the area and the feasibility of such controls. Thus, EPA recommends that a State's control technology analyses for existing stationary sources go beyond major stationary sources in the area and that States require control technology for other sources in the area that are reasonable to control in light of the area's attainment needs and the feasibility of such control.[20] Specific guidance on the evaluation of the technological and economic feasibility of control technology for existing stationary sources is contained in appendix C4.

(c) *PM–10 precursors.* Section 189(e) of the amended Act provides that for all PM–10 nonattainment areas, the control requirements applicable under PM–10 SIP's in effect for major stationary sources of PM–10 are also applicable to major stationary sources of PM–10 precursors, except where EPA determines that such sources do not contribute significantly to PM–10 levels which exceed the PM–10 NAAQS in the area. Thus, for example, because moderate PM–10 nonattainment area SIP's should contain RACT for major stationary sources of PM–10, they should also contain RACT for major stationary sources of PM–10 precursors, unless EPA determines otherwise. Section 189(e) also requires that EPA issue guidance for the control of PM–10 precursors. This discussion represents EPA's guidance for controlling PM–10 precursors for major stationary sources in moderate PM–10 nonattainment areas.

As explained earlier (see section III.C.1.(g)), pursuant to the requirement of section 189(e), EPA intends to make a formal determination as to whether major stationary sources of PM–10 precursors contribute significantly to PM–10 levels in a particular area when it takes rulemaking action on the individual moderate area SIP's. However, a determination will be based on air quality analyses, on any additional technical information discovered by individual States during SIP development, and on any other studies conducted by the State or EPA which may help to indicate whether major stationary sources of specific precursors contribute significantly to PM–10 concentrations in a particular area. Therefore, while the subsequent discussion provides guidance as to EPA's implementation of section 189(e), and gives an indication of some of the factors that will guide EPA's findings under this section, none of the general views expressed herein are intended to preclude specific findings based on reviews of individual SIP's for PM–10 nonattainment areas.

The following discussion is intended to provide initial guidance with respect to each of the above named potential

[19] See, for example, 44 FR 53728 (September 17, 1979) and footnote 3 of that notice. Note that EPA's emissions trading policy statement has clarified that the RACT requirement may be satisfied by achieving "RACT equivalent" emissions reductions from existing sources.

[20] Note that Congress has not used the word "all" in conjunction with RACT in either the earlier law or as now amended. Thus, it is possible that a State could demonstrate that an existing source in an area should not be subject to a control technology especially where such control is unreasonable in light of the area's attainment needs or infeasible. Even if EPA was required to impose control technology on every existing stationary source, where a State demonstrates that available control technology for a source is infeasible or otherwise unreasonable, EPA would conclude that "reasonably" available control technology for that source constitutes no control or, stated differently, that no control technology for the source is "reasonably" available. As referenced above, section 172(c) of the amended Act provides that RACT should apply to "existing sources in the area. This is the same language that appeared in the RACT requirement under the CAA prior to the 1990 Amendments (see section 172(b)(3) of the pre-1990 CAAA law). Under the pre-amended law, EPA in effect interpreted the phrase "existing sources in the area" as it is interpreted here. EPA believes that Congress has placed its imprimatur on, if not adopted, EPA's prior interpretation of RACT (see, e.g. section 182(a)(2)(A) of the amended Act see also section 193 of the amended Act (savings clause preserving prior EPA guidance except where inconsistent with the Clean Air Act Amendments)).

PM–10 precursors. Since the potential of SO_2 and NO_2 emissions to contribute significantly to PM–10 exceedances is more regionally dependent than VOC emissions, the following discussion focuses on general regional characteristics attributable to SO_2 and NOx emissions. In the western United States, (considered west of the 100th meridian for the purpose of this discussion), EPA believes that sources of SO_2 and NOx emissions may contribute to exceedances of PM–10 levels in several major metropolitan areas (e.g., Los Angeles, Salt Lake County, Utah County, Denver and the San Joaquin Valley). The EPA's conclusion with respect to these areas is based on the presence of factors which enhance the likelihood of secondary formation from these precursors, such as source mix and density, nonattainment area size, particular meteorology, and topography. Where nonattainment areas are relatively small in size, precursors are usually transported out of the area before secondary particles can form in significant quantity. However, due to the greater size of the areas mentioned above, pollutant transport between airsheds is considerably diminished; consequently, locally emitted PM–10 precursors remain in the area long enough to form secondary particles and make a significant contribution to the PM–10 problem in that area.[21] The particular combination of source mix, meterology, and topography in these major metropolitan areas rarely occurs in other areas in the West. For this reason, EPA believes that sources of SO_2 and NOx emissions are not as likely to be significant contributors to the nonattainment problem in those other areas. Therefore, if EPA determines, based on information contained in SIP submittals and any other available information, that major stationary sources of SO_2 and NOx in the Western United States do not contribute significantly to exceedances of the PM–10 standard, such sources would not be expected to meet the requirements that apply to major stationary sources of PM–10, (e.g., RACT). Further discussion on the need to apply RACT in PM–10 nonattainment areas is found in the sections below addressing control requirements for PM–10 nonattainment areas that do/do not demonstrate attainment.

Unlike the case in the Western United States, as a general matter, pollutant transport between airsheds in the Eastern United States can be responsible for a relatively large portion of secondary particle concentrations in nonattainment areas. Thus, the determination as to whether sources of PM–10 precursors in the nonattainment area would contribute significantly to PM–10 concentrations in the same area is correspondingly more difficult. Moreover, the characteristic contributions of the subject precursors vary. Sulfate compounds, for example, are generally known to be present in significant quantities in many eastern areas, while historically, nitrate compounds have been measured in relatively low concentrations throughout the East. As explained earlier, and as with VOC's, EPA will determine the applicability of section 189(e) based on technical and any other available information provided by States in their individual SIP submittals. However, when considering whether sources in PM–10 nonattainment areas should be required to adopt PM–10 precursor control, EPA will assess the reasonableness of the SIP submittal in light of the fact that substantial region-wide reductions of SO_2, NOx, and VOC emissions are expected to result from the implementation of the Act. These emissions reductions may mitigate precursor contributions due to PM–10 concentrations. The EPA will also take into account the historically low nitrate concentrations in the Eastern United States.

The EPA will also consider the information submitted by States containing major stationary sources of VOC's in areas which are in nonattainment for PM–10 to determine whether VOC emissions from such sources do/do not contribute significantly to exceedances of the ambient standard in their particular area. In considering the reductions to be achieved by controlling PM–10 precursors under section 189(e), Congress has indicated that EPA should take into account reductions achievable from control requirements imposed by other sections or titles of the 1990 Act.[22] Thus, along with their information addressing whether VOC's contribute significantly to PM–10 nonattainment in their area, States may wish to include in their SIP submittals a showing that control of VOC emissions under other Act requirments may suffice to relieve them of the need to adopt PM–10 precursor controls under section 189(e). Any such finding will be made by EPA based on information provided in the individual SIP submittal. Other Act control requirements which could be considered as contributing to VOC reductions are where, for example, areas which are nonattainment for PM–10 are also nonattainment for ozone and, thus, are already required to apply RACT on sources of VOC under section 182(b)(2). The VOC reductions may also be realized from new or modified major stationary sources due to the implementation of NSR programs in ozone nonattainment or attainment areas. When reviewing a SIP submittal containing a request for an exemption from PM–10 precursor controls under section 189(e) in pat because of actual or expected VOC reductions from other control requirements of the 1990 Act, EPA's determination will include an assessment of the reasonableness of the submission. This assessment by EPA will take into account the possible significance of differences between control strategies for PM–10 and other pollutants (e.g., requirements imposing BACT as opposed to RACT, and differences in attainment deadlines).

(d) *Condensible PM–10.* Condensible particulate matter (CPM) refers to particles which form in the atmosphere as the exhaust gases from a source cool. The CPM emissions form particles in the PM–10 size range and are considered PM–10 emissions (see, e.g., "PM–10 SIP Development Guideline," (June 1987) at p. 5–32 and 55 FR 41547 (October 12, 1990)). The EPA issued guidance on CPM in a December 24, 1990 memordandum from John Calcagni and William Laxton entitled "Interim Guidance on Emission Limits and Stack Test Methods for Inclusion in PM–10 SIP's." Generally, RACT for sources of CPM will be reviewed consistent with this guidance. In addition, EPA believes it is reasonable and therefore

[21] The focus here and elsewhere on transport between airsheds and on the characteristics of the nonattainment area flow from the statutory language of section 189(e) which states that in determining not to require RACT for major stationary sources of precursors, EPA must find that the sources do not contribute significantly to PM–10 levels which exceed the NAAQS "in the area." Thus, this provision EPA may determine that major stationary sources of precursors in a nonattainment area should not be subject to RACT because the sources do not contribute significantly to PM–10 levels in the same area.

[22] Congress recognized that sources of PM–10 precursors may be otherwise controlled. For example, the House Report states that "[t]he Committee notes that some of these precursors may well be controlled under other provisions of the Act" (H.R. Rep. No. 490, 101st Cong., 2d Sess. 268 (1990)). Moreover, Congress expressly recommended that EPA consider other provisions of the CAA in addressing precursors. The House Report states as follows: "The Committee expects the Administration to harmonize the PM–10 reduction objective of this section with other applicable regulations of this Act regarding PM–10 precursors, such as NOx" (H.R. Rep. No. 490 at 268). Throughout the discussion of PM–10 precursors EPA has relied on the actual and expected reductions from other CAA requirements and has attempted to reconcile these with the CAA's PM–10 attainment objective.

constitutes RACT to control CPM only where CPM is a significant portion of the emissions from an existing stationary source.[23] Further guidance on the identification of sources where a State's RACT analysis should consider CPM is found in "Assessment of the Controllability of Condensible Particulate Matter," published in October 1990. The EPA recognizes that this document is interim guidance and is still subject to review. Also, note that EPA has recently proposed to add a method for measuring CPM emissions from stationary sources to appendix M of 40 CFR part 51 (55 FR 41546, October 12, 1990).

(e) *Total suspended particulate (TSP) RACT.* Since 1979, EPA has taken action to approve a number of TSP nonattainment area SIP's that require RACT for existing stationary sources of TSP. As a technical matter, RACT level measures to control TSP emissions generally utilize technology that also effectively controls PM–10 emissions. Thus, EPA believes it is reasonable to generally presume that control technology which represents RACT for TSP emissions from a source satisfies the requirement of RACT for PM–10 emissions under the amended Act. However, the reasonableness of this control technology may be refuted for a particular source in a PM–10 nonattainment area by information which indicates that a level of PM–10 control greater than that achieved by the TSP RACT would constitute RACT for PM–10. Further, with respect to controls on stack and process fugitive emission points that represent RACT in currently-approved TSP SIP's, EPA specifically recommends that the emission limits be reviewed in light of improvements in control technology and reductions in control costs that may now make lower emission limits reasonable. In addition, regulations submitted as part of the PM–10 SIP should be reviewed to determine whether they meet EPA criteria regarding enforceability, as noted above (see sections 172(c)(6) and 110(a)(2)(A)). Consistent with the previous discussion on RACM, EPA will not approve any PM–10 SIP containing RACT measures that fail to meet applicable statutory and regulatory requirements for SIP enforceability.

In those PM–10 nonattainment areas that do not have previously-approved part D TSP nonattainment area plans, the particulate matter regulations for existing sources should be reviewed to determine if:

(1) Additional controls are necessary to meet RACT requirements.

(2) The regulations meet EPA's enforceability criteria. Similarly, existing regulations controlling emissions of specific PM–10 precursors should be reviewed on a case-by-case basis for major stationary sources in those areas and RACT analysis conducted unless the Administrator determines the source does not contribute significantly to PM–10 levels which exceed the NAAQS in the area.

Section 110(n)(1) of the amended Act provides that all TSP SIP's, including any revisions, that were approved or promulgated by EPA before enactment of the 1990 CAAA shall remain in effect until EPA approves or promulgates a revision to the SIP under the new law. Further, the General Savings Clause, section 193 of the amended Act, states that any control requirement in effect or required to be adopted by a SIP in effect before enactment of the 1990 CAAA for any area that is a nonattainment area for any air pollutant may not be modified unless the modification ensures equivalent or greater emissions reductions of such air pollutant. Thus, under section 110(n)(1), existing provisions of TSP SIP's remain in effect until such provisions are revised under the new law. Also, under section 193, modifications to TSP control requirements, such as TSP RACT, cannot be approved unless at a minimum they ensure equivalent emission reductions of PM–10.[24]

3. SIP's That Demonstrate Attainment

The SIP's for moderate nonattainment areas should provide for the implementation of control measures for area sources and control technology for stationary sources of PM–10 emissions which demonstrate attainment of the PM–10 NAAQS as expeditiously as practicable and no later than the applicable statutory attainment dates. Therefore, if a State adopts less than all available measures but demonstrates, adequately and appropriately, that (a) RFP and attainment of the PM–10 NAAQS is assured, and application of all such available measures would not result in attainment any faster, then a plan which requires implementation of less than all technologically and economically available measures may be approved.[25] The EPA believes it would be unreasonable to require that a plan which demonstrates attainment include all technologically and economically available control measures even though such measures would not expedite attainment. Thus, for some sources in areas which demonstrate attainment, it is possible that some available control measures may not be "reasonably" available because their implementation would not expedite attainment.

As provided in section 172(c)(9) of the amended Act, all moderate nonattainment area SIP's that demonstrate attainment must include contingency measures. These measures must be submitted by the initial moderate nonattainment areas no later than November 15, 1993 (See section 172(b)).[26] These measures become effective without further action by the State or EPA, upon determination by EPA that the area has failed to make RFP or to attain the PM–10 NAAQS by the applicable statutory deadline. These contingency measures should consist of other available control measures that are not included in the control strategy.

One basis EPA recommends for determining the magnitude of contingency measures is the amount of actual PM–10 emissions reductions required by the SIP control strategy to attain the standards. When developing a control strategy and demonstrating attainment with dispersion modeling, the State may determine that some actual emissions must be reduced and also some allowable emission limits must be reduced to the levels that the sources are actually emitting.

The contingency measures to be implemented if an area does not attain the standards on schedule should be a portion of the actual emissions reductions required by the SIP control strategy to bring about attainment. Therefore, the contingency emissions reductions should be approximately equal to the emissions reductions

[23] Where CPM emissions are a negligible portion of the emissions from an existing stationary source, EPA's policy is that such control may be excluded as being unreasonable for that source (See also *Alabama Power Co. v. Costle*, 636 F.2d 323, 360 (D.C. Cir. 1979), discussed above). RACT for the source would therefore be no control or, stated alternatively, EPA would conclude that control technology for the source is not "reasonably" available.

[24] A moderate PM–10 area is a nonattainment area for any air pollutant within the meaning of section 193. Thus, for these areas, any modifications to any control requirements, including TSP, would have to ensure equivalent emission reductions of PM–10.

[25] See, e.g., 44 FR 20375 (April 4, 1979). See also 56 FR 5460 (Feburary 11, 1991).

[26] This deadline constitutes the formal establishment of the schedule according to which the initial PM–10 moderate nonattainment areas must submit the contingency measure requirement. The initial PM–10 nonattainment areas were designated nonattainment upon enactment by operation of law. See section 107(d)(4)(B). Under the schedule established today, contingency measures must be submitted no later than 3 years from the nonattainment designations for these areas which, in this instance, is no later than November 15, 1993.

necessary to demonstrate RFP for one year. For instance, reductions equal to 25 percent of the total strategy would be appropriate for a moderate nonattainment area since the control strategy must generally be implemented within a 3- to 4-year period between SIP development and the attainment date, and since RFP generally requires annual incremental reductions in emissions to attain the standards.

The contingency measures should consist of other available control measures beyond those required to attain the standards and may go beyond RACM. It is important not to allow contingency measures to obviate an adequate and appropriate control strategy demonstration.

Contingency measures must be implemented immediately after EPA determines the area has failed to make RFP or to attain the standards, i.e., if the shortfall constitutes a fraction of the area's annual reduction target, the measures to be implemented should address the specific deficiency indentity. The purpose of the contingency measure provisions is to ensure that corrective measures will automatically become effective at the time that EPA makes such a determination. The EPA is required to determine within 90 days after receiving a milestone demonstration and within 8 months after the attainment date (or 1 or 2 years later if extensions of the attainment date are granted), whether these requirements have been met (sections 179(c), 188(b)(2) and 189(c)(2)). Contingency measures must be fully adopted and take effect within 1 year without further legislative action once EPA makes such determinations.

Moderate areas that EPA finds have failed to attain the standards by the applicable date are reclassified as serious areas by operation of law (section 188(b)(2)). Guidance for serious areas addressing the contingency measure requirement will be issued at a later date.

4. SIP's That Do Not Demonstrate Attainment

In those moderate PM–10 nonattainment areas where the State's control strategy cannot demonstrate attainment by the applicable date mandated in the Act, the State should document that its control strategy represents the application of RACM, consistent with the "determination of RACM" discussion above, to existing sources. The EPA believes it is reasonable for all available control measures that are technologically and economically feasible to be adopted for areas that do not demonstrate attainment.

Areas that cannot practically demonstrate attainment of the PM–10 standards by the applicable attainment date will be reclassified as serious areas under section 188(b) and will be required to implement BACM, which includes the application of BACT to existing stationary sources (see H.R. Rep. No. 490, 101st Cong., 2d Sess. 276 (1990)). As discussed below, for those areas that will be reclassified as serious, EPA believes it may be reasonable, in some limited circumstances, for States to consider the compatibility of RACM and RACT with the BACM and BACT that will ultimately be implemented under the serious area plans for those areas.

In the case of RACM for area sources, EPA anticipates that any future implementation of BACM for these sources will be additive to, and hence compatible with, RACM. This is because BACM will generally consist of a more extensive implementation of the RACM measures (e.g., paving more unpaved roads, strengthening the components of a smoke management program, imposing additional requirements to improve the performance of wood burning devices). Since EPA anticipates that RACM and BACM for these sources will be compatible, the SIP's for these areas should reflect the application of available control measures to existing sources in moderate nonattainment areas as determined by the analysis described above for RACM.

As discussed previously, the determination of RACT for specific stack and process sources includes consideration of the technological and economic feasibility of control measures. In the case of those moderate PM–10 areas that were designated nonattainment upon enactment of the 1990 CAAA, EPA plans to reclassify those areas which EPA believes cannot practicably attain by December 31, 1994. Implementation of BACT will be required for sources in the initial moderate areas that EPA so reclassifies approximately 2 years after the deadline for implementation of RACT.[27] In many instances, the installation of pollution controls representing RACT may involve substantial capital expenditures. In the event that BACT is later required for those sources, this may require controls significantly incompatible with those recently installed as RACT, largely wasting those recent expenditures. Under such circumstances, the installation of controls in the first round of SIP planning would be unreasonable. Accordingly, SIP's for the initial moderate areas reclassified as serious in the mandatory reclassification rulemaking for these areas need not require major changes to the control systems for specific stack and process sources where a State reasonably demonstrates that such changes will be significantly incompatible with the application of BACT-level control systems. A State's demonstration should include, for example, showing what the State believes RACT and BACT are for the source and why they are significantly incompatible.

In the case of fugitive dust associated with stationary sources, EPA anticipates that the implementation of BACT will be compatible with the implementation of RACT. This is based on the fact that control of such emissions under BACT will generally be additive to RACT controls (i.e., consist of a more extensive application of fugitive dust control measures imposed as RACT). Therefore, EPA expects that to the extent that control of these sources is technologically and economically feasible, the SIP's for these areas must reflect the application of available control technology to address fugitive dust emissions associated with stationary sources.

(a) *Attainment date waiver nonanthropogenic sources).* Under section 188(f) of the amended Act, EPA may waive attainment dates for a moderate area where EPA determines that nonanthropogenic sources of PM–10 contribute significantly to a violation of the PM–10 NAAQS in the area. Thus, those States having moderate PM–10 nonattainment areas where significant contributions to PM–10 emissions come from sources not caused by humans directly or indirectly may request an attainment date waiver. However, EPA may only waive the attainment date for those moderate areas that fully implement their moderate area SIP requirements (see H.R. Rep. No. 490, 101st Cong., 2d Sess. 265 (1990)). Thus, any State having a moderate nonattainment area that the State believes may qualify for an attainment date waiver should be nevertheless

[27] Under section 189(a), moderate areas designated nonattainment at enactment must implement RACM (including RACT) by December 10, 1993. Under section 189(b) areas reclassified as serious must implement BACM (including BACT) within 4 years after reclassification. Thus, if EPA takes final action to reclassify areas in 1992, they will be required to implement BACT approximately 2 years after the December 10, 1993 implementation deadline for RACT.

proceeed with SIP development and implementation.

In addition, the legislative history suggests that Congress contemplated a narrow definition of what may qualify as "nonanthropogenic" and would limit it to activities where the human role in the causation of the pollution is highly attenuated (see generally H.R. Rep. No. 490). "The term 'anthropogenic sources' is intended to include activities that are anthropogenic in origin. An example of such sources is the dry lake beds at Owens and Mono Lakes in California, which give rise to dust storms that are a result of the diversion of water that would otherwise flow to such lakes and should be considered anthropogenic sources" (H.R. Rep. No. 490 at 265). The EPA intends to issue additional guidance on the scope of the waiver provision as it applies to both moderate and serious PM-10 nonattainment areas in the near future.

(b) *International border areas.* Under section 179B of the amended Act, a SIP for a moderate PM-10 nonattainment area affected by emissions originating from sources outside the United States shall be approved by the Administrator provided such plan meets all the applicable requirements under the Act (including, for example, RACM/RACT), other than a requirement that such a plan or revision demonstrates attainment of the PM-10 NAAQS by the applicable moderate area attainment date; and the SIP demonstrates that the area would attain by that date, but for the emissions emanating from outside of the United States. Generally, EPA expects that such areas will be adjacent to international borders (e.g., El Paso, Texas; Nogales, Arizona; Imperial Valley, California).

D. Sulfur Dioxide

1. Designations

The Act, following the 1977 CAAA, gave the primary authority for initiating designations to State Governors. Although State Governors continue to have authority to initiate the designation process (section 107(d)(3)(D)), the 1990 CAAA also give the EPA the authority to initiate and to promulgate designations (sections 107(d)(1), (3)).

(a) *Classification categories.* In general, areas may be designated as nonattainment, attainment, or unclassifiable for the NAAQS (section 107(d)(1)(C)), and they provide authority and schedules for designations of areas following promulgation of a new or revised NAAQS (section 107(d)(1)(A), (B)).

(b) *Basis of designation.* The SO_2 designations can be made on the basis of modeling or monitoring information which indicates attainment or nonattainment of the NAAQS. For example, an area might be designated nonattainment for violation of the primary SO_2 NAAQS, the secondary SO_2 NAAQS, or both.[28] More detailed information about the basis for designations under the new law is provided in the following discussions.

(c) *Methods of designations.* Some areas were designated "by operation of law" upon enactment of the 1990 CAAA based upon their status immediately before enactment. Areas which were designated nonattainment by operation of law (section 107(d)(1)(C)) are listed in 40 CFR part 81.

The EPA now has the authority to redesignate additional areas as nonattainment for SO_2. The first step in this process is for EPA to notify the affected State's Governor that available information indicates that the designation of an area in the State should be revised (section 107(d)(3)(A)). Section 107(d)(3)(A) provides that EPA may act (i.e., notify the Governor that an area should be redesignated) "on the basis of air quality data, planning and control considerations, or any other air quality related considerations the Administrator deems appropriate." No later than 120 days after receiving this notification, the Governor should submit appropriate redesignations to EPA (section 107(d)(3)(B)). If the Governor fails to act within 120 days of this notification, EPA shall promulgate the appropriate designation (section 107(d)(3)(C)). If the Governor does respond, within 120 days after EPA receives the Governor's response, EPA must promulgate a redesignation making any modifications EPA deems necessary (section 107(d)(3)(C)). If EPA intends to modify the Governor's redesignation submittal, then EPA must notify the Governor of the modifications no later than 60 days prior to the date EPA promulgates the redesignation (section 107(d)(3)(C)).

(d) *Criteria for redesignation.* The revised law sets forth specific requirements which govern the redesignation of an area from nonattainment to attainment (section 107(d)(3)(E)). The particular criteria for redesignating nonattainment areas to attainment (section 107(d)(3)(E)) include the following: The area has attained the NAAQS, the area has a fully approved (section 110(k)) implementation plan, the improvement in air quality is due to permanent and enforceable emissions reductions, the area has a maintenance plan meeting the requirements of section 175A, and the area meets all applicable requirements under section 110 and part D. The Agency will issue detailed guidance for States seeking redesignation of nonattainment areas to attainment at a later date.

2. Classifications

The classification provisions (section 172(a)(1)) give EPA the authority to classify nonattainment areas for the purposes of applying attainment dates (section 172(a)(2)(A)). In exercising this authority, EPA may consider such factors as the severity of the nonattainment problem or the availability and feasibility of the pollution control measures. Based upon the classification, EPA may set later attainment dates for areas with more severe air quality problems (section 172(a)(2)(A)). At the present time, EPA does not intend to establish a specific classification scheme for areas which violate the primary or the secondary SO_2 NAAQS.

3. Plan submission Deadlines

Submission deadlines for States to submit implementation plans (part D Plans) for SO_2 NAAQS are given in section 191. Explicit plan submission deadlines are given for nonattainment areas which violate the primary SO_2 NAAQS (section 191). Explicit plan submission deadlines are not given for nonattainment areas that violate only the secondary or both the primary and secondary SO_2 NAAQS, however.

(a) *Initial nonattainment areas.* States with existing nonattainment areas for the primary SO_2 NAAQS where those areas lack fully approved SIP's, including part D plans, must submit implementation plans (section 191(b)). These implementation plans must meet the requirements of subpart 1 of part D, and they must be submitted within 18 months after enactment of the 1990 CAAA (i.e., by May 15, 1992).

(b) *Subsequent nonattainment areas.* States with areas that are designated or redesignated, after 1990 CAAA enactment, as nonattainment areas for the primary SO_2 NAAQS must submit implementation plans (section 191(a)). These implementation plans must meet the requirements of part D and the plans must be submitted within 18 months of the designation or redesignation.

(c) *Secondary NAAQS.* In the past, Congress and the Agency has required more expeditious resolution of nonattainment for primary NAAQS than

[28] The primary SO_2 NAAQS, is that level which is "requisite to protect the public health" (section 109(b)(1)). The secondary SO_2 NAAQS, is that level which is "requisite to protect the public welfare" (section 109(b)(2)).

for secondary NAAQS. Examples of this are the availability of 18-month extensions for implementation plan submittals for secondary NAAQS (section 110(b)), and the discretion allowed in dates for attainment of secondary NAAQS (section 110(a)(2)(A)).

For areas which violate both primary and secondary NAAQS, allowing separate schedules for secondary and primary plans unnecessarily complicates the plan implementation and processing. Therefore, EPA expects secondary NAAQS attainment plans to be submitted on the same schedule as plans for the primary NAAQS for these areas.

As a result of the 1990 CAAA, EPA has the authority to establish a schedule for submittal of a secondary NAAQS plan or plan revision (section 172(b)). The EPA must establish this schedule at the time of the nonattainment designation. The SIP must be submitted no later than 3 years from the date of the nonattainment designation. Although the law allows up to 3 years for SIP submittal, because the level of control is no more difficult to establish than for the primary NAAQS, and absent compelling justification by a State, EPA will require SIP's for these areas within 18 months of nonattainment designation.

4. Attainment Dates.

In the 1990 CAAA, Congress set specific attainment dates for nonattainment areas which were found to violate the primary SO_2 NAAQS.[29] Attainment dates for nonattainment areas violating either just the secondary or both the primary and secondary SO_2 NAAQS were not specified although. Congress deleted the requirement that the secondary NAAQS be attained by a "reasonable" time for attainment of secondary NAAQS (section 110(a)(2)(A)).

The 1990 CAAA require attainment of both the primary and secondary NAAQS "as expeditiously as practicable" (section 172(a)(2) (A) and (B)). Although the 1990 CAAA give EPA authority to establish flexible attainment dates (section 172(a)(2)(A)–(C)), this flexibility does not apply to areas which have specific attainment dates (section 172(a)(2)(D)). Specifically, the flexibility does not apply to attainment of the primary SO_2 NAAQS because the attainment date is specified for primary SO_2 nonattainment areas (section 192), but it does apply to secondary SO_2 NAAQS because the 1990 CAAA do not specify an attainment date for secondary SO_2 nonattainment areas.

(a) *Initial nonattainment areas.* Areas which were designated nonattainment at the time of enactment (i.e., areas which are nonattainment by operation of law), must attain the primary NAAQS as expeditiously as practicable but no later than 5 years after enactment of the 1990 CAAA (i.e., by November 15, 1995) (section 192(b)).

(b) *Subsequent nonattainment areas.* Areas which are redesignated as nonattainment, subsequent to the November 15, 1990 date of enactment, must attain the primary NAAQS "as expeditiously as practicable," but not later than 5 years after the nonattainment designation (section 192(a)).

(c) *Inadequate plan areas (SIP call areas).* Some nonattainment areas have plans which were approved by EPA before enactment of the 1990 CAAA. If, subsequent to the plan's approval, EPA finds that such a plan is substantially inadequate, the plan must be revised to provide for attainment. The revised plan must provide attainment of the primary NAAQS within 5 years from the finding of inadequacy (section 192(c)).

(d) *Attainment of secondary NAAQS.* The 1977 CAAA set the attainment date for secondary NAAQS as "a reasonable time" (section 110(a)(2)(A)). This was consistent with the requirements of the 1970 Act. At the same time, for the new part D nonattainment areas, section 172(a)(1) established the attainment date for secondary NAAQS as "as expeditiously as practicable." The EPA reiterated in regulations that "a reasonable time" after plan approval was allowed for attainment of the secondary NAAQS (40 CFR 51.110(c)(1)).

In the 1990 CAAA, Congress provided for attainment "as expeditiously as practicable" in both primary and secondary nonattainment areas (section 172(a)(2)). Congress set a specific attainment date of 5 years for primary NAAQS (see above) but did not set a specific deadline for attainment of secondary NAAQS (section 192). At the same time, Congress deleted section 110(a)(2)(A), which had stated that attainment dates should generally not exceed 3 years from plan submittal (section 110(a)(2)(A)). This implies that the only test for the approvability of a secondary NAAQS attainment date is whether or not the date is "as expeditiously as practicable" (section 172(a)(2)(B)).

To maintain continuity with past program guidance, EPA plans to allow attainment with the secondary NAAQS to be scheduled on the basis of what is expeditious for the area (section 193). Areas which are nonattainment for the secondary SO_2 NAAQS may be allowed additional time for attainment beyond the deadlines mandated for the primary NAAQS. In general, EPA will rely on the substantive provisions of 40 CFR 51.340 (subpart R) to determine expeditiousness.

Areas which are nonattainment for both the primary and secondary NAAQS may split their attainment dates, i.e., attain the primary NAAQS within 5 years and attain the secondary NAAQS as expeditiously as practicable. This will be acceptable provided that the State can demonstrate that the secondary NAAQS cannot be attained within the same timeframe as the primary NAAQS.

5. Nonattainment Plan Provision

(a) *Overview.* The 1970 Act required States to submit implementation plans which would indicate how the State would attain and maintain the NAAQS. The requirements for these general SIP's were listed in part A, section 110. In the 1977 CAAA, requirements for implementation plans in nonattainment areas were given in part D (section 171–178). These requriements addressed a number of issues including, but not limited to, attainment dates, permit requirements, and planning procedures.

The 1990 CAAA have not made significant changes in the plan requirements for SO_2 nonattainment areas (section 172). For this reason, States may generally continue to rely on past guidance for SO_2 programs. This position is further supported by the General Savings Clause contained in section 193. A summary of existing policy and guidance may be found in the "SO_2 Guideline," the "Guideline On Air Quality Models (revised)," and other documents listed in Appendix B. Despite the continued validity of past guidance in the implementation of the amended Act for SO_2 NAAQS, there are some areas of policy that need to be clarified. One area that will need policy clarification is the issue of plan approval. The EPA intends to consider only the final rulemaking status of the

[29] The 1977 CAAA continued the requirement from the 1970 CAA that States submit implementation plans which provided for attainment of primary NAAQS "as expeditiously as practicable but * * * in no case later than three years" from the date of approval of the plan (1977 CAAA section 110(a)(2)(A)). For secondary NAAQS, attainment was required within "a reasonable time" (section 110(a)(2)(A) after the 1977 CAAA).

For part D nonattainment areas, the 1977 CAAA required attainment for both primary and secondary NAAQS nonattainment areas "as expeditiously as practicable" but for primary standards, a deadline of December 31, 1982 was also given (part D, section 172(a)(1) after the 1977 CAAA).

SIP at the time of enactment in relationship to the requirements of the 1990 CAAA. This is consistent with the Savings Clause for existing plan provisions (section 110(n)(1)). If the nonattainment area had a part D plan that was approved prior to enactment, the EPA will not require a new part D SIP. For these areas, a new part D SIP will not be required regardless of whether the attainment date for the area had passed at the time of encactment of the 1990 CAAA. However, if the approved plan was not a part D plan, the State will have to submit a complete part D plan to EPA for approval because part D plans are requried for nonattainment areas (section 191(b)).

Policy clarification is also needed concerning the status of areas that lack approved part D plans and that contain a SO_2 emission source that has permanently shut down. A minimum of two actions are required for States wishing to establish that these areas are inoperative for SIP purposes.

The first action is that the State must provide EPA with sufficient evidence to establish that the source has in fact been permanently shut down. Three criteria exist for establishing permanent source shutdown. These criteria require proof that the source has been inoperative for at least the 2 preceding years, that the source is precluded from resuming operations, and that the source has been withdrawn from the State's emissions inventory.

The second action is that the State must establish that fully-approved NSR and PSD programs are in place so that the source would be required to undergo NSR prior to start-up if it were reactivated.

After the State has completed these actions, EPA will consider additional plan requirements of such areas on a case-by-case basis. Alternatively, the State may choose to submit complete part D plans to EPA for these areas. As discussed in a previous section on redesignation, section 107(d)(3) provides that a nonattainment area must meet all the requirements set forth in section 107(d)(3)(E), including a maintenance plan consistent with section 175A, before it may be redesignated to attainment. The EPA recognizes that this issue is of immediate concern to some States and Regions. The EPA will issue guidance concerning plan requirements and redesignation requirements in the future.

(b) *Issues*—(1) *RACT.* For most criteria pollutants, RACT is control technology that is reasonably available considering technological and economic feasibility (see memorandum from R. Strelow, December 9, 1976). The definition of RACT for SO_2 is that control technology which is necessary to achieve the NAAQS (40 CFR 51.100 (o)). Since SO_2 RACT is already defined as the technology necessary to achieve NAAQS, control technology which failed to achieve the SO_2 NAAQS would, by definition, fail to be SO_2 RACT.

The EPA intends to continue defining RACT for SO_2 as that control technology which will achieve the NAAQS within statutory timeframes.

(2) *RFP.* Section 171(1) of the amended Act defines RFP as "such annual incremental reductions in emissions of the relevant air pollutant as are required by this part (part D) or may reasonably be required by EPA for the purpose of ensuring attainment of the applicable national ambient air quality standard by the applicable date." This definition is most appropriate for pollutants which are emitted by numerous and diverse sources, where the relationship between any individual source and the overall air quality is not explicitly quantified, and where the emission reductions necessary to attain the NAAQS are inventory-wide. The definition is generally less pertinent to pollutants such as SO_2 which usually have a limited number of sources, relationships between individual sources and air quality which are relatively well defined, and emissions control measures which result in swift and dramatic improvement in air quality. That is, for SO_2, there is usually a single "step" between pre-control nonattainment and post-control between pre-control nonattainment and post-control attainment.

Therefore, for SO_2, with its discernible relationship between emissions and air quality and significant and immediate air quality improvements, RFP will continue to be construed as "adherence to an ambitious compliance schedule." [50]

(3) *Contingency measures.* Section 172(c)(9) of the amended Act defines contingency measures as measures in a SIP which are to be implemented if an area fails to make RFP or fails to attain the NAAQS by the applicable attainment date. Contingency measures become effective without further action by the State or EPA, upon determination by EPA that the area has failed to (1) make reasonable further progress or (2) attain the SO_2 NAAQS by the applicable statutory deadline. These contingency measures shall consist of other available control measures that are not included in the control strategy.

The EPA interprets the contingency measure provisions as primarily directed at general programs which can be undertaken on an areawide basis. Again, SO_2 presents special considerations. First, for some of the other criteria pollutants, the analytical tools for quantifying the relationship between reductions in precursor emissions and resulting air quality improvements remain subject to significant uncertainities, in contrast with procedures for pollutants such as SO_2. Second, emission estimates and attainment analyses can be strongly influenced by overly-optimistic assumptions about control efficiency and rates of compliance for many small sources. In contrast, controls for SO_2 are well understood and are far less prone to uncertainty. Since SO_2 control measures are by definition based upon what is directly and quantifiably necessary to attain the SO_2 NAAQS, it would be unlikely for an area to implement the necessary emissions control yet fail to attain the NAAQS. Therefore, for SO_2 programs, EPA interprets "contingency measures" to mean that the State agency has a comprehensive program to identify sources of violations of the SO_2 NAAQS and to undertake an aggressive follow-up for compliance and enforcement, including expedited procedures for establishing enforceable consent agreements pending the adoption of revised SIP's.

This definition of minimum contingency measures for SO_2 does not preclude a State from requiring additional contingency measures that are enforceable and appropriate for a particular source or source category.

(4) *Stack height issues and remand.* Three provisions of the stack height rules have been remanded to EPA as a result of the court decision in *NRDC* v. *Thomas*, 838 F.2d 1224 (D.C. Cir.), cert. denied, 109 S.Ct. 219 (1988). The EPA has allowed States to move ahead on affected SIP revisions without regard to the remanded section of these rules, but with the caveat that the States must remain aware of the status of these rules, and may be required to take action at a later date to respond to any rule revisions resulting from the remand (see, "Interim Policy on Stack Height Regulatory Actions," J. Craig Potter, April 22, 1988.)

(5) *Existing modeling protocols.* The amended Act requires submittal of a complete SIP 18 months from enactment or nonattainment designation (section

[50] U.S. Environmental Protection Agency, Office of Air Quality Planning and Standards, "Guidance Document for Correction of part D SIP's for Nonattainment Areas," (Research Triangle Park, North Carolina: January 27, 1984), page 25.

191). This 18-month submittal, supported by a guideline model, must be completed even in cases where the modeling protocol is currently under review. Equivalent models to those approved for regulatory use in EPA's "Guideline on Air Quality Models (Revised)" might not be approved in sufficient time to complete SIP development and submittal within the statutory deadline. Therefore, States should proceed with existing guideline models, without deviation from the model guideline, to fulfill the requirements of the 18-month SIP submittal.

If States and/or source owners wish to complete work on alternative models, they may do so. If EPA accepts the alternative models, then the SIP may be revised accordingly. However, if the alternative model is not completed in a timely fashion, or if the alternative is unacceptable, an acceptable regulation must be in place to assure expeditious attainment and to avoid sanctions for failure to submit a SIP (section 172(c)(8)).

The Act as amended in 1990 gives EPA authority to prescribe modeling procedures to determine the effect of emissions on ambient air quality (Part D and section 110(a)(2)(K)(i)). The EPA plans to rely on its "Guideline on Air Quality Models (Revised)" as the basis for all prescribed procedures and is in the process of revising 40 CFR part 51 to effect this requirement.

(6) *Test methods and averaging times.* The NAAQS are expressed as maximum ambient concentrations that are to be met on a continuous basis. Consequently, States must demonstrate that source emission limitations, averaging times, and compliance monitoring methods are sufficient to assure compliance with the air quality standards. The choice of a monitoring technique should consider regulatory needs, monitoring technology costs, and the relative benefits of one technique versus another.

Continuous emission monitoring systems (CEMS) are a reliable technique for continuously monitoring emissions of SO_2 for many source categories. Detailed guidance documents for determining CEMS feasibility in individual cases are listed in section III.D.6. of this preamble (see letters from W. Reilly to J. Dingell, April 10, 1991). Further guidance is being developed. In general, the criteria for determining when CEMS are appropriate are as follows:

i. Any source where there is an established new source performance standard (NSPS) which requires CEMS for determining compliance should rely on this method in the SIP. For example, any utility boiler that physically meets the applicability requirements of 40 CFR part 60, subpart Da, whether it is an "existing boiler" under 40 CFR part 60, subpart Da or not, must have CEMS for NSPS compliance and should therefore rely on CEMS for SIP compliance as well.

ii. Any source that has other regulatory requirements with CEMS as the compliance method should rely on CEMS as the SIP compliance method as well.

The feasibility of using CEMS as the compliance method has already been established for sources that fall into these two categories. For example, in developing NSPS, the Agency has already considered cost, environmental, and energy impacts for these standards. Where CEMS are not technically or economically feasible in other cases, other appropriate continuous monitoring techniques, such as continuous compliance of relevant process parameters or alternatives approved by EPA under title IV, would be appropriate.

(7) *Enforceability.* The SIP measures should be converted into a legally-enforceable vehicle (e.g., a regulation or permit). The regulations or other measures should meet EPA's criteria regarding the enforceability of SIP's and SIP revisions.

Guidance on enforceability requirements has been provided to Regional Offices in various memoranda (see Bauman/Biondi and Potter/Adams/Blake memoranda listed in section III.D.6. of this preamble. Those SIP's and SIP revisions which fail to satisfy the enforceability criteria should not be forwarded for approval. If they are submitted, they will be disapproved if, in EPA's judgement, they fail to satisfy applicable statutory and regulatory requirements.

(8) *Maintenance plans.* As discussed previously, section 107(d)(3) of the amended Act (see subparagraphs A and E of section 107(d)(3) as well as section 175A) requires that nonattainment areas must have a fully-approved maintenance plan meeting the requirements of section 175A before they can be redesignated to attainment. Section 175A(a) mandates, among other things, that a State must submit a SIP revision which provides for maintenance of the NAAQS for at least 10 years after the redesignation to attainment (section 175A(a)). A subsequent SIP revision providing for maintenance of the NAAQS for an additional 10 years is due 8 years into the first 10-year maintenance period.

The law does not provide any exceptions to the maintenance plan requirement. Therefore, in addition to meeting all pre-existing requirements, areas which are designated nonattainment by operation of law (section 107(d)(1)(C)(i)), as well as areas which are designated nonattainment in the future (section 107(d)(3)), must all submit maintenance plans before they can be redesignated to attainment.

The EPA will issue guidance on the contents of section 175A maintenance plans at a later date.

(9) *NSR.* As specified in section 302(j), for SO_2 nonattainment areas the term major stationary source means any stationary source which directly emits, or has the potential to emit, 100 tons per year or more of SO_2. To meet the requirements of section 172(c)(5), States must submit a permit program that meets all the permit requirements of section 173 for the construction and operation of new and modified stationary sources of SO_2.

6. Sources of SO_2 Policy and Guidance

Unless otherwise noted, the guidance documents and sources listed below were developed by the EPA's Office of Air Quality Planning and Standards (OAQPS) located in Research Triangle Park, North Carolina. The EPA plans to address additional policy questions by periodically issuing memorandums which offer guidance in a question-and-answer format. See also:

(a) SO_2 Guidance.

(1) SO_2 Guideline, October 1989.

(2) SO_2 Guideline Appendices, October 1989.

(3) Letter from William Reilly to Representative John Dingell, in response to questions and GAO report, April 10, 1991.

(4) Memorandum from Craig Potter, Thomas Adams, and Francis Blake to Air Division Director, Regions I–X, "Review of State Implementation Plans and Revisions for Enforceability and Legal Sufficiency," September 23, 1987.

(5) Memorandum from Gerald A. Emison, Director, OAQPS, to Air Division Director, Regions I–X, "Transmittal of Reissued OAQPS CEMS Policy," March 31, 1988.

(6) "Approval and Promulgation of Implementation Plans; Dearborn, Lake, and Porter Counties, Indiana," 54 FR 612, January 9, 1989.

(7) Memorandum from Robert Bauman and Rich Biondi to Air Branch Chiefs, "SO_2 SIP Deficiency Checklist," November 28, 1990.

(8) Memorandum from Gerald Emison, Director, OAQPS, to David Kee, Director, Air Management Division, Region V, "Need for a Short-Term BACT Analysis for the Proposed William A. Zimmer Power Plant," November 24, 1986.

(b) *SIP Guidance.* (1) Guidance Document for Correction of Part D SIP's for Nonattainment Areas, January 27, 1984.

(2) Memorandum from R. Strelow to Regional Administrator, Regions I–X, "Guidance for Determining Acceptability of SIP Regulations in Non-Attainment Areas," December 9, 1976.

(c) *Modeling Guidance.* (1) "Guideline on Air Quality Models" (Revised), July 1986.

(2) "Interim Procedures for Evaluating Air Quality Models: Experience with Implementation," July 1985.

(3) Model Clearinghouse.

(d) *New Source Review Guidance.* (1) Memorandum from Richard Rhoads, Director CPDD, to Division Director, Regions I–X, "Growth Restrictions in Secondary NAAQS Nonattainment Areas," October 28, 1980.

(2) New Source Review Prevention of Significant Deterioration and Nonattainment Area Guidance Notebook, January 1988.

(3) Guidance on State Operating Permit Programs, Federal Register notice, June 1989.

(4) NSR Electronic Bulletin Board, Computerized Compilation of Previous and Latest NSR Policy Memoranda and Technical Information Items, Federal Register notice, January 1990.

(5) "Draft Workshop Manual for New Source Review (NSR) Programs," December 1990.

(6) Memorandum from J. Seitz, OAQPS, to Air Division Director, Regions I–X, "New Source Review (NSR) Program Transitional Guidance," March 11, 1991.

E. Lead

1. Statutory Background

(a) *Designations.* In 1978, when EPA promulgated the lead NAAQS, EPA believed that implementation and maintenance of the lead NAAQS should be in accordance with the SIP requirements set forth in section 110 and not part D. The EPA believed that section 107—and and part D requirements—were intended by Congress to apply only to NAAQS which were set prior to 1977. In these cases, SIP's had already been adopted, the attainment dates had already passed, and the SIP's had proven to be inadequate. The designation process was intended as a mechanism to initiate new SIP revisions for those existing NAAQS. Since the attainment date for the lead NAAQS at that time had not yet arrived, no lead SIP's had yet been proven inadequate. Consequently, lead did not meet the circumstances which initially resulted in a need for nonattainment designations and plan revisions under part D.

The Act, as amended, clearly defines EPA's authority to designate areas for lead. Section 107(d)(5) authorizes EPA to require States to designate areas (or portions thereof) as nonattainment, attainment or unclassifiable with respect to the lead NAAQS in effect as of the date of enactment of the 1990 CAAA.[31] As provided in section 107(d)(5), these lead areas are to be designated pursuant to the procedures outlined in section 107(d)(1)(A) and (B) except that certain timeframes of subparagraph (B) have been modified by section 107(d)(5). Section 107(d)(1)(A) permits EPA to require the Governors of affected States to submit recommended designations for the areas EPA seeks designated in a timeframe that EPA deems reasonable. This timeframe, however, can be no sooner than 120 days nor later than 1 year after the date EPA notifies the State of the requirement to submit such designations. Section 107(d)(1)(B) requires that EPA must then promulgate these designations no later than 1 year after notifying the State of the requirement to designate areas for lead. The EPA may make any modifications deemed necessary to the designations submitted by the State (see generally section 107(d)(1)(B) of the Act). However, no later than 120 days before promulgating a modified area, EPA must notify the affected State and provide an opportunity for the State to demonstrate why any proposed modification is inappropriate.

If the Governor of an affected State fails to submit the required lead designations, in whole or in part, EPA is required to promulgate the designation that it deems appropriate for any area (or portion thereof) not designated by the State.

(b) *Area boundaries.* States should identify the boundaries of the nonattainment areas when submitting nonattainment designations for lead. A lead nonattainment area consists of that area which does not meet (or that contributes to ambient air quality in a nearby area that does not meet) the lead NAAQS (see section 107(d)(1) of the amended Act). Generally, EPA recommends that the lead nonattainment boundary be defined by the perimeter of the county in which the ambient lead monitor(s) recording the violation is located. In addition, if the ambient monitor measuring violations is located near another county, then EPA recommends that the other county also be designated as nonattainment for lead. In some situations, however, a boundary other than the county perimeter may be appropriate. States may choose alternatively to define the lead nonattainment boundary by using any one, or a combination, of the following techniques: Qualitative analysis, spatial interpolation of air monitoring data, or air quality simulation by dispersion modeling. These techniques are more fully described in "Procedures for Estimating Probability of Nonattainment of a PM–10 NAAQS Using Total Suspended Particulate or PM–10 Data," December 1986. The EPA recommends that the State submit a defensible rationale for the boundary chosen with the Governor's designation for an area.

(c) *Classification.*[32] Section 172(a)(1)(A) of the amended Act authorizes EPA to classify areas designated as nonattainment for the purposes of applying an attainment date pursuant to section 172(a)(2) or for other reasons. In determining the appropriate classification, EPA may consider such factors as the severity of the nonattainment problem and the availability and feasibility of the pollution control measures (see section 172(a)(1)(A) of the amended Act). The EPA may, but is not required to, classify lead nonattainment areas. At this time, EPA does not intend to classify lead nonattainment areas with respect to the lead NAAQS in effect on date of enactment of the 1990 CAAA. That is, while section 172(a)(1)(A) provides a mechanism to classify nonattainment areas, section 172(a)(2)(D) provides that the attainment date extensions described in section 172(a)(2)(A) do not apply to nonattainment areas having specified attainment dates under other provisions of part D. Section 192(a) specifically provides an attainment date for areas designated as nonattainment for the lead NAAQS in effect at the date of enactment of the 1990 CAAA. Therefore, EPA has legal authority to classify lead nonattainment areas, but

[31] Section 107(d)(5) of the amended Act does not indicate that all areas of the State must be designated. At this time, EPA has only requested that specified areas within affected States be designated. Therefore, most States and the vast majority of the areas within affected States will still have no designations, i.e., will not be designated as attainment, nonattainment, or unclassifiable for lead.

[32] It is important to note that classifications and designations are separate concepts. Designations refer to an area's attainment status (i.e., the area is designated attainment, nonattainment, or unclassifiable). Classifications are applied to areas designated nonattainment and are a mechanism for addressing differences among nonattainment areas. For example, classifications usually result in applying additional control measures and providing longer attainment deadlines for those areas having more serious nonattainment problems.

the 5-year attainment date under section 192(a) cannot be extended pursuant to section 172(a)(2)(D), and EPA deems it inappropriate to establish a classification scheme within the 5-year interval.

(d) *Plan submission.* Generally, the date by which a plan must be submitted for an area is trigggered by the area's nonattainment designation. For areas designated nonattainment for the primary lead NAAQS in effect at enactment of the 1990 CAAA, States must submit SIP's which meet the applicable requirements of part D of the Act within 18 months of an area's nonattainment designation (see section 191(a) of the amended Act).

(e) *Attainment dates.* Generally, the date by which an area must attain the lead NAAQS also is triggered by the area's nonattainment designation. For areas designated nonattainment for the primary lead NAAQS in effect at enactment of the 1990 CAAA, SIP's must provide for attainment of the lead NAAQS as expeditiously as practicable but no later than 5 years from the date of an area's nonattainment designation (see section 192(a) of the amended Act).

2. Pre-SIP Submittal Activities

As discussed above, any States containing an area designated as nonattainment with respect to the lead NAAQS in effect at enactment of the 1990 CAAA must develop and submit a part D SIP providing for attainment. Most of the general part D nonattainment plan provisions are set forth in section 172(c). The SIP's submitted to meet the part D requirements must, among other things, include RACM, RACT, provide for RFP, contain contingency measures and require permits for the construction and operation of major new and modified stationary sources. This portion of the General Preamble does not address more specifically RACM, RFP, contingency measures, or some of the other part D SIP requirements for lead nonattainment areas. States should nonetheless proceed, consistent with more general guidance on part D requirements to collect information and data necessary to complete SIP analyses. A listing of some of the specific SIP activities States should be completing is described below. The EPA will continue to evaluate the need for more detailed guidance on the part D lead SIP requirements as it preceeds with nonattainment designations for lead.

(a) *Nonattainment NSR.* Previously, areas that were not attaining the lead NAAQS were not designated as nonattainment and therefore were not required to have a nonattainment NSR program consistent with section 173 of the Act. However, now that there will be areas designated nonattainment for lead, a nonattainment NSR program is required for such areas. Specifically, section 172(c)(5) requires that States having areas designated nonattainment for lead submit as part of the applicable SIP, provisions requiring permits for the construction and operation of new or modified major stationary sources anywhere in the nonattainment area, in accordance with section 173. Further guidance is provided in the March 11, 1991 memorandum from John Seitz, entitled "New Source Review (NSR) Program Transitional Guidance to Implement the Clean Air Act Amendment Changes that Affect NSR" which is found in Appendix D. Among other things, the March 11, 1991 memorandum addresses the interim NSR requirements applicable to an area upon its designation as nonattainment for lead but before the amended law provides for submittal of its NSR program. The EPA generally recommends that States evaluate their existing rules to determine whether there are any impediments to implementing a nonattainment NSR program in the areas designated as nonattainment for lead.

(b) *Emission inventories.* An emissions inventory is required to determine the nature and extent of the specific control strategies that are needed. Emissions inventories should be based on measured emissions or documented emission factors. The more comprehensive and accurate the inventory, the more effective the control evaluation (see section 172(c)(3) of the amended Act which specifies that nonattainment area SIP's include "a comprehensive, accurate, current inventory of actual emissions from all sources of the relevant pollutant or pollutants in such area * * *"). The States should begin to evaluate the type of emissions inventory that needs to be developed and the type of information that needs to be collected to support a SIP submittal. Postponing completion of the emissions inventory could jeopardize the submittal of the lead SIP within the statutorily-mandated deadlines.

The following documents provide further information for lead emissions inventory development: Draft Manual "Updated Information on Approval and Promulgation of Lead Implementation Plans," EPA, July 1983; "Guideline Series; Development of an Example Control Strategy for Lead," April 1979; and "Guideline Series, Supplementary Guideline for Lead Implementation Plans," August 1978.

(c) *Modeling and meteorological monitoring.* The lead SIP regulations at 40 CFR 51.117 require that atmospheric dispersion modeling be employed for the demonstration of attainment for areas in the vicinity of point sources listed in 40 CFR 51.117(a)(1).[33] To complete the necessary dispersion modeling, meteorological and other data will be necessary. At this time States should be evaluating whether the necessary meteorological data are available and, if not, determine what needs to be done to obtain these data. Dispersion modeling should follow the procedures outlined in the "Guideline On Air Quality Models (Revised)." The "Guideline" indicates that if on-site meteorological stations are used, 12 months of data are required. Postponing the decision to determine whether on-site stations need to be established could jeopardize the submittal of the lead SIP within the statutorily-mandated deadlines.

(d) *Control measures.* As indicated above, EPA is not at this time providing guidance on the RACM measures specific to lead SIP's. States should, however, continue to rely on guidance issued for the control of particulate emissions. In light of the fact that some SIP's are due July 6, 1993, EPA recommends that States focus their efforts more specifically now on evaluations of the affected lead sources. The EPA believes that the efforts States should undertake include an assessment of operation and maintenance (O & M) and work practice measures. In addition, State efforts should identify and analyze control measures which reduce process fugitive and lead-bearing open dust emission sources. These evaluations should consider the technological feasibility of additional control measures, as well as the cost of the identified options.

3. Transition Issues

(a) *Transition from pre-amended law.* As mentioned, under the pre-amended law there were no designations for lead.

---

[33] Generally, in addition to meeting applicable requirements under part D of title I of the amended Act, SIP's for those areas designated nonattainment for lead must also meet the applicable regulatory requirements set forth in 40 CFR part 51 except to the extent those requirements are inconsistent with the amended Act. The 1990 CAAA include a General Savings Clause which provides that regulations (or guidance, etc.) in effect before the enactment of the Amendments shall remain in effect after enactment (see section 193). However, the Savings Clause also provides that such regulations (or guidance, etc.) shall remain in effect "except to the extent otherwise provided under this Act inconsistent with any provisions of this Act or revised by the Administrator." *Id.*

and States were required to submit SIP's in accordance with section 110. The amended law, as discussed, now authorizes EPA to designate areas for lead. There are transitional issues raised by the changes in the new law including, for example, the status of the obligation to submit adequate section 110 SIP's under the pre-amended law and the status of any approved section 110 SIP's.

(b) *Unapproved or inadequate section 110 SIP's.* Before enactment of the 1990 CAAA, a State may have failed to submit a section 110 SIP to EPA, it may have submitted a section 110 SIP which was not approved by EPA, or it may have submitted and had approved a section 110 SIP which EPA subsequently found substantially inadequate. The last situation is true of at least three States. Specifically, prior to the enactment of the CAAA, EPA issued SIP calls for three States having substantially inadequate section 110 SIP's. Except for those areas designated nonattainment for lead, section 110(n)(2) requires these States to continue their section 110 planning in accordance with the SIP calls (or, as the case may be, in response to EPA's 1978 promulgation of the quarterly 1.5 $\mu g/m^3$ lead standard) and to attain the NAAQS by the applicable date specified in section 110(m)(2). Any area in these States that is designated nonattainment under the new law for the existing lead NAAQS must instead submit a part D SIP that comports with the applicable requirements in subpart 1 and subpart 5, including the SIP submittal material deadlines and attainment dates in sections 191 and 192 of subpart 5.

The EPA intends to ensure that a State whose SIP needed correction prior to enactment of the 1990 CAAA and that expects to have an area designated as nonattainment under the new law, continues to progress with its plan development and implementation for that area as provided in section 110(n)(2). Once areas are designated nonattainment for the existing lead NAAQS, the State must complete a SIP providing for attainment by the date that is as expeditious as "practicable" for any such newly-designated nonattainment area. In reviewing any future SIP's under sections 191 and 192, EPA will consider what progress could reasonably have been accomplished both prior to enactment of the new law and after enactment but before the area was designated nonattainment.

(c) *Approved section 110 SIP's.* In the situation where a State submitted and EPA approved or promulgated a section 110 lead SIP before the 1990 CAAA enactment, then all provisions of such SIP shall remain in effect unless and until EPA approves a revision under the new law (see section 110(n)(1)).

F. Nitrogen Dioxide

This section applies primarily to the South Coast Air Basin of California, which is the only designated NO_2 nonattainment area in the Nation. The basin was designated nonattainment by operation of law (section 107(d)(1)(C). The requirements described in this section would also generally apply to any subsequently designated NO_2 nonattainment areas. Nothing in this guidance prevents a SIP for a nonattainment area from containing measures more stringent than the guidance recommends.

In general, the Act, as amended in 1990, does not require significant revisions in the NO_2 NAAQS program. The General Savings Clause (section 193) provides for general program continuity by explicitly preserving existing rules, policies, and guidance that are not affected by Act changes.

1. Designations

The 1977 Act gave the primary authority for initiating designations to State Governors. Although State Governors continue to have authority to initiate the designation process (section 107(d)(3)(D)), the 1990 CAAA also give the Administrator the authority to initiate and to promulgate designations (section 107(d) (1) and (3)).

In general, areas may be designated as nonattainment, attainment, or unclassifiable for the NAAQS (section 107(d)(1)(A) (i), (ii), and (iii)). The 1990 CAAA provide for designations of areas based upon the attainment status for the current NAAQS (section 107(d)(1)(C)); they also provide authority and schedules for designations of areas following promulgation of a new or revised NAAQS (section 107(d)(1) (A) and (B)).

The revised law sets forth specific requirements that govern the redesignation of an area from nonattainment to attainment (section 107(d)(3)(E)). The particular criteria for redesignating nonattainment areas to attainment (section 107(d)(3)(E)) include the following determinations: The area has attained the NAAQS, the area has a fully approved (section 110(k)) implementation plan, the improvement in air quality is due to permanent and enforceable emissions reductions, the area has a maintenance plan meeting the requirements of section 175A, and the area meets all applicable requirements under section 110 and part D. See "Redesignations and Maintenance" under III.H.6 of this document.

2. Plan Deadlines

Submission deadlines for States to submit implementation plans (part D Plans) for NO_2 are given in section 191. Plan submission deadlines are explicitly given for nonattainment areas which violate the primary NO_2 NAAQS (section 191). The NO_2 primary and secondary NAAQS are identical. Thus, the South Coast Air Basin must submit an implementation plan that meets the requirements of subpart 1 of part D, and the plan must be submitted within 18 months after enactment of the 1990 CAAA (i.e., by May 15, 1992).

States with areas that are designated or redesignated, after enactment, as nonattainment areas for the NO_2 NAAQS must submit implementation plans (section 191(a)). These implementation plans must meet the requirements of part D and the plans must be submitted within 18 months of the designation or redesignation.

3. Attainment Dates

In the 1990 CAAA, Congress set specific attainment dates for nonattainment areas that were found to violate the NO_2 NAAQS. The 1990 CAAA require attainment of the NAAQS "as expeditiously as practicable" (section 172(a)(2) (A) and (B)). Although the 1990 CAAA give EPA authority to establish flexible attainment dates (section 172(a)(2) (A)–(C)), this flexibility does not apply to areas that have specific attainment dates (section 172(a)(2)(D)). Specifically, the flexibility does not apply to attainment of the NO_2 NAAQS because the attainment date is specified in section 192.

Areas that were designated nonattainment at the time of enactment (i.e., areas that are nonattainment by operation of law) must attain the primary standard as expeditiously as practicable, but not later than 5 years after enactment of the 1990 CAAA (i.e., by November 15, 1995) (section 192(b)). This requirement applies to the South Coast Air Basin.

Areas that are redesignated as nonattainment, subsequent to the November 15, 1990 date of enactment, must attain the primary standard as expeditiously as practicable, but not later than 5 years after the nonattainment designation (section 192(a)).

4. Nonattainment Plan Provisions

The 1970 Act required States to submit implementation plans that would

indicate how the State would attain and maintain the NAAQS. The requirements for these general SIP's were listed in part A, section 110. In the 1977 CAAA, requirements for implementation plans in nonattainment areas were given in part D (sections 171–178). These requirements addressed a number of issues including, but not limited to, attainment dates, permit requirements, and planning procedures.

The 1990 CAAA have not made significant changes in the plan requirements for NO_2 nonattainment areas (section 172(c)). For this reason, States may generally continue to rely on past guidance for NO_2 programs in meeting those requirements. This position is further supported by the General Savings Clause contained in section 193.

G. New Source Review (NSR) Nonattainment Permit Requirements

This section of the General Preamble describes the new or revised NSR nonattainment permit program requirements under part D of the amended Act and generally explains EPA's interpretation of these requirements. For these new or revised provisions, the provisions discussed below are the minimum statutory requirements States must use to revise their existing NSR nonattainment permit plan provisions (or to adopt such provisions if none exist) which must be submitted to EPA for approval by the deadlines set forth in the CAAA of 1990. In keeping with past practice, EPA intends to issue regulations setting forth in more detail the requirements for an approvable NSR program.

1. Construction Bans

Under the 1977 Amendments to the Act, section 110(a)(2)(I) of the statute required EPA to place certain nonattainment areas under a federally-imposed construction moratorium (ban) that prohibited the construction of all new or modified major stationary sources in nonattainment areas where the State failed to have an implementation plan meeting all of the requirements of part D of the Act. The amended Act repeals the provisions previously found in section 110(a)(2)(I). The amended Act also contains a Savings Clause in section 110(n)(3) that preserves certain existing section 110(a)(2)(I) construction bans in place before November 15, 1990, if the ban was imposed by virtue of a finding that the plan for the area did not contain an adequate NSR permitting program as required by section 172(b)(6) of the 1977 Act, or the plan failed to provide for timely attainment of the SO_2 NAAQS by December 31, 1982. All other construction bans imposed pursuant to section 110(a)(2)(I) are lifted as a result of the new statutory provision. In accordance with new section 110(n)(3), the construction bans that are retained remain in effect until the EPA determines that the SIP meets either the new part D permit requirements or the new requirements for attainment of the NAAQS for SO_2 under subpart 5 of part D, as applicable.

Section 173 and the various subparts of title I of the amended Act contain the requirements for issuance of a NSR construction permit to a new or modified major source in a nonattainment area or ozone transport region. To issue such permits, the permit authority must first find per section 173(a)(4) that "the Administrator has not determined that the applicable implementation plan is not being adequately implemented for the nonattainment area" in accordance with the requirements of part D. If the Administrator determines that the SIP for the part D requirements is not being adequately implemented for the nonattainment area where the new source or modification wants to locate, permits that would otherwise meet the requirements of section 173 cannot be issued.

While EPA policy generally is to impose a FIP where States fail to adopt Clean Air Act NSR provisions, section 113(a)(5) of the amended Act provides that EPA may prohibit the construction or modification of any major stationary source in any area, including an attainment area, where there is a violation of the statute's NSR requirements. Specifically, EPA may apply section 113(a)(5) whenever the Administrator finds, on the basis of available information, that a State is not acting in compliance with any requirement or prohibition of the Act relating to construction of new sources or the modification of existing sources. Upon such a finding, the Administrator may issue an order prohibiting the construction or modification of any major stationary source in any area to which such requirement applies, issue an administrative penalty order in accordance with the requirements of section 113(d), or bring a civil action under section 113(b). Nothing in section 113(a)(5) precludes the EPA from taking other enforcement action or commencing a criminal action under section 113(c) at any time for any such violation. Section 113(a)(5) is discussed in greater detail in section IV.B.2.

2. Emissions Offsets

The 1990 CAAA clarify and expand the basic requirements for emissions offsets already contained in section 173 of part D. Moreover, in limiting the States' opportunities to set up a growth allowance (described in section III.G.3), the 1990 CAAA establish emissions offsets as the primary regulatory mechanism for accommodating major new source growth without jeopardizing the Act's mandate for reasonable progress toward NAAQS attainment. In light of such statutory changes, each State should review the emissions offset requirements in its current NSR rules and determine what revisions are necessary to conform those rules with the criteria described below.

(a) *RFP.* The basic requirement in section 173(a)(1) remains the same in that to issue a permit the State must demonstrate that the new source growth does not interfere with the approved demonstration of reasonable progress for the area. Such growth results from new or increased emissions potential from major stationary sources, as well as from emissions from minor source growth unaccounted for by the control strategy in the EPA-approved SIP.

The EPA interprets section 173(a)(1)(A) to ratify current EPA regulations requiring that the emissions baseline for offset purposes be calculated in a manner consistent with the emissions baseline used to demonstrate RFP. Regarding the amount of offsets that is necessary to show noninterference with RFP, EPA will presume that so long as a new source obtains offsets in an amount equal to or greater than the amount specified in the applicable offset ratio (or, where the statute does not specify an offset ratio, in an amount greater than 1:1), the new source will represent RFP. In general, this presumption may be overcome only if the applicable SIP expressly relies on new sources to generate a greater amount of reductions than set forth in the statutory offset ratios. The offsets still must satisfy the section 173(c) requirements as discussed below.

The EPA regulations at 40 CFR 51.165(a)(3)(i) presently require that offset be based on allowable or actual emissions, depending on which currency is used for RFP and attainment demonstration purposes. Historically, RFP often has been tracked primarily by a yearly assessment of the net actual emissions reductions that have occurred, because actual emissions best correlate with ambient air quality concentrations. In such cases, EPA regulations disallow the use of "paper" offsets based on SIP allowable emissions in excess of actual emissions, and the statutory changes do not call for any change in this approach.

(b) *Geographic location of offsets.* New section 173(c)(1) stipulates that emissions offsets generally must be obtained by the same source or other existing sources in the same nonattainment area. However, the statutory provision does allow offsets to be obtained in another nonattainment area under two specific conditions. First, the other nonattainment area must have an equal or higher nonattainment classification than the nonattainment area in which the source would construct. In applying this provision, the other nonattainment area must have an equal or higher nonattainment classification for the same pollutant. For example, a proposed major new source of VOC seeking to locate in a nonattainment area classified as serious for ozone could possibly obtain emission offsets in another ozone nonattainment area if such area were designated serious, severe or extreme for ozone.

The second condition is that the emissions from such other nonattainment area must contribute to a violation of the NAAQS in the nonattainment area in which the source would construct. The showing that such contribution from sources in another nonattainment area exists should be acknowledged and verified by the permitting authority. Generally, dispersion modeling is used to identify the existence of such impacts.

(c) *Timing of offsets.* New section 173(c)(1) also adds the condition that any emissions offsets obtained in conjunction with the issuance of a permit to a new or modified source must be, "by the time a new or modified source commences operation, in effect and enforceable * * * *." This new statutory condition for offsets augments an existing requirement under section 173 that provides that offsets must be "legally binding" before a permit may be issued. The 1990 CAAA clarified the existing requirement by requiring that the offsets be federally enforceable before permit issuance (see revised section 173(a)). Accordingly, while it is possible for a State to issue a permit to construct once sufficient emissions offsets have been identified and made federally enforceable (generally through a permit condition made to the permit of the existing source), the State must also ensure that the required emissions reductions actually occur no later than the date on which the new source or modified source would commence operation.

(d) *Actual emissions reductions.* New section 173(c)(1) includes the provision that the:

> * * "Total tonnage of increased emissions from the new or modified source shall be offset by an equal or greater amount, as applicable, in the actual emissions of such air pollutant from the same or other sources in the area.

The Act was previously silent on this issue; however, EPA's current policy concerning the baseline for emissions offsets, as contained in the part 51 NSR nonattainment regulations, provides that the offset baseline is the emissions limit under the applicable SIP in effect at the time the permit application is filed, unless the State's demonstration of RFP and NAAQS attainment is based on actual emissions, or the applicable SIP does not contain an emissions limitation for that particular source or source category (see existing § 51.165(a)(3)(i)). The new statutory requirement provides that emissions increases from the new or modified source must be offset by real reductions in actual emissions. As noted above, RFP and attainment demonstrations generally are based on actual emissions. However, to the extent that these plans are based on allowable emissions, offset credit for reductions in allowable emissions (as necessary to conform with the requirements of section 173(a)(1)) is appropriate, but will be deemed inadequate if there is not a real reduction in actual emissions that equals or exceeds, as applicable, the increase in emissions resulting from the operation of the major new or modified source.

(e) *Creditable reductions.* The final condition, added under new section 173(c)(2), prevents emissions reductions otherwise required by the Act from being credited for purposes of satisfying the part D offset requirement. For example, reductions required to meet RACT and acid rain reductions pursuant to statutory requirements are not creditable for emissions offsets. However, the statutory language does allow reductions that are achieved indirectly pursuant to a requirement of the CAAA (incidental emission reductions) to be credited if they meet the other criteria for offsets contained in section 173(c)(1) as described above. Section 112 of the CAAA contains source requirements for hazardous air pollutants. The listed hazardous air pollutants in section 112(b)(1) are not exempt from regulation under the nonattainment provisions of part D. New and existing sources must meet, where applicable, the MACT emissions limitations as promulgated under section 112(d). As part of the schedule to comply with an applicable MACT standard, an existing source may elect to comply with the early reductions requirements of section 112(i)(5). By electing to achieve early reductions, an existing source may, under certain conditions outlined below, meet an alternative emission limit in lieu of meeting an applicable MACT standard for a period of 6 years from the compliance date of an otherwise applicable MACT standard. Except as follows, to obtain the MACT compliance extension, the reduction must be achieved before the otherwise applicable standard is first proposed. A source may also obtain an extension if it achieves the early reductions after the proposal of an applicable MACT limitation but before January 1, 1994, and it makes an enforceable commitment to achieve such reductions before the proposal of the MACT standard.

Emissions reductions of the hazardous air pollutants listed in section 112(b)(1) to meet a standard under section 112(d), including emissions reductions to meet the early reductions requirements of section 112(i)(5), are not creditable emissions reductions. These reductions are required by the Act and therefore are not creditable for offsetting emission increases under part D (section 173(c)(2)).

However, any emissions reductions in excess of the required MACT standards or, in the case of early reductions under section 112(i)(5), any emissions reductions in excess of 90 percent (or in excess of 95 percent for particulates) should be considered surplus and therefore should be creditable for offsetting purposes if all other applicable requirements are met. Also, if emissions of a pollutant other than one of the specific pollutants required to be controlled are reduced as a result of complying with a MACT standard (e.g., reductions in nontoxic VOC's that are incidental to reductions of a toxic VOC that is subject to the MACT standard), or if reductions are achieved pursuant to a State requirement that goes beyond the requirements of the Act, such emissions reductions are considered incidental and, therefore, should be considered as creditable reductions if all other conditions for a creditable offset are met.

For purposes of equity, EPA encourages States to allow sources to use pre-enactment banked emissions reductions credits for offsetting purposes. States may do so as long as the restored credits meet all other offset creditability criteria and such credits are considered by States as part of the attainment emissions inventory when developing their post-enactment attainment demonstration. For VOC offsets, it is important to note that such reductions must be used in accordance

with the offset ratios established by the 1990 CAAA for the different ozone nonattainment area classifications. Existing EPA regulations (40 CFR 51.165(a)(3)(ii)(C)(1)) prohibits certain pre-enactment banked emissions reduction credits, i.e., reductions achieved by shutting down existing sources or curtailing production or operating hours, from being used in the absence of an EPA-approved attainment plan.

3. Creditable Emissions Reductions for Netting

Except for the provisions of subpart 2 of title I, the 1990 CAAA generally do not affect EPA's current procedures for netting emissions decreases and increases (see section III.A.3–5). Netting emissions increases and decreases should be determined consistent with EPA's current NSR rules and EPA's "Emissions Trading Policy Statement (ETPS)" (51 FR 43823, December 4, 1986). Use of pre-enactment reductions for netting with post-enactment emissions increases continues to be available to the extent allowed under State rules. However, because these reductions represent emissions that are not included in the 1990 base year inventory, States should consider the post-enactment increases (less post-enactment decreases) as growth even though, for applicability purposes, the source's net emissions change is de minimis.

Early reductions of hazardous air pollutant (HAP) emissions under section 112(i)(5) may also be creditable emissions reductions for netting. The EPA considers early reductions under section 112(i)(5) to be "surplus" under the ETPS and creditable for netting. As stated above, early reductions cannot be used as creditable reductions for offset purposes due to the statutory limitations of section 173(c)(2).

4. Growth Allowances

Before the enactment of the 1990 CAAA, the Act provided in general that States could establish a pollutant-specific allowance for additional growth in any designated nonattainment area by controlling existing source emissions beyond the amount of reduction required to demonstrate RFP. Based on the amount of excess control of existing emissions, section 172(b)(5) of the 1977 Act provided that States could "expressly identify and quantify the emissions, if any, of any such pollutant which will be allowed to result from the construction and operation of major new or modified stationary sources" in a particular nonattainment area. Before the 1990 CAAA, section 173(1)(A) implied that the emissions reductions used to "allow" the new emissions from the proposed source could be furnished by controlling existing major sources to a greater degree than that required by RACT or by controlling minor sources.

Commensurate with the above provision, section 173(1)(B) of the 1977 Act required that, before a part D permit to construct could be issued to any major new or modified stationary source, the permitting agency had to have determined that "emissions of such pollutant from the proposed source would not cause or contribute to emissions levels which exceed the allowance permitted * * *." Alternatively, when a major new or modified stationary source applied for a part D permit (in the absence of an approved growth allowance), corresponding emissions reductions (offsets) were to be obtained from existing sources as a prerequisite for approving the new construction. These provisions formed the basis for States to develop "growth allowances" in their SIP's.

The revised Act restricts where new allowances may be established and voids certain existing growth allowances. Revised sections 172(c)(4) and 173(a)(1)(B) limit new growth allowances to only those portions of a nonattainment area which have been formally targeted for economic growth by the Administrator, in consultation with the Secretary of Housing and Urban Development. New section 173(b) of the Act invalidates by operation of law any existing growth allowance in any nonattainment area that either received a notice that the SIP was substantially inadequate under section 110(a)(2)(H)(ii) of the 1977 Act, or receives a notice of inadequacy under new section 110(k)(1) of the amended Act. Again, section 173(a)(1)(B) lifts this restriction from targeted economic growth areas. Where a growth allowance is no longer valid or cannot be established, a proposed major new or modified stationary source in a nonattainment area is required to obtain emissions offsets on a case-by-case basis in order to obtain construction approval.

5. Analysis of Alternatives

Before the enactment of the 1990 CAAA, section 172 of part D contained a provision requiring that, in the case of implementation plans that could not demonstrate attainment of the NAAQS for ozone or carbon monoxide by December 31, 1982, such plans must include

> * * * A program which requires, prior to the issuance of any permit * * * an analysis of alternative sites, sizes, production processes, and environmental control techniques for such proposed source which demonstrates that the benefits of the proposed source significantly outweight the environmental and social costs imposed as a result of its location, construction, or modification.

The 1990 CAAA removed this provision from section 172 and added it as new section 173(a)(5). Consequently, such analysis and demonstration are now prerequisites to the issuance of any part D permit.

6. Control Technology Information

Per section 173(d), the States must provide that the control technology information from permits issued under section 173 be promptly submitted to EPA's RACT/BACT/LAER clearinghouse, to other States, and to the general public.

7. Innovative Controls for Rocket Engines and Motors

Under section 173(e) States are authorized to allow offsetting, by alternative or innovative means, of emission increases from rocket engine and motor firing, and cleaning related to such firing. This authorization applies to any existing or modified major source that tests rocket engines or motors under the conditions found at section 173(e) (1) through (4). The conditions require that a proposed modification be solely for the purpose of expanding the testing of rocket engines or motors at a facility already permitted for such purposes, and that the testing is required for a program essential to the national security as certified in writing by the appropriate departments and agencies of the Federal government. Also, the source must have used all reasonable means to obtain offsets, all available offsets must already have been used, and sufficient offsets must not be available to the source. Once these criteria are met, the source will comply with an alternative measure, imposed by the permitting authority, designed to offset any emissions increases not directly offset by the source.

In lieu of requiring alternative offset measures, the permitting authority may impose an emissions fee to be paid to, and used by, the State to maximize emissions reductions in the area of the test facility. Section 173(e)(4) caps such fees at 1.5 times the cost of stationary control costs adopted in the area during the previous 3 years.

8. Exemptions for Stripper Wells

Section 819 of the CAAA provides a limited exclusion for activities related to stripper wells, where such activities occur in certain designated nonattainment areas. The statutory provision as written applies to the production of oil or natural gas from a stripper well, and the equipment used in the exploration, production, development, storage, and processing of such stripper well oil and natural gas. Stripper wells are low-production wells. Oil stripper wells produce less than 10 barrels of oil per day and natural gas stripper wells (as defined in the National Gas Policy Act, 15 U.S.C. section 3318(b)) cannot exceed an average of 60,000 cubic feet per production day during a 90-day production period.

While still subject to the general requirements under sections 172 and 173 of the Act for NSR nonattainment area permits, including requirements applicable under those sections pursuant to subpart 1 of part D of the amended Act, these activities are not required to satisfy the additional nonattainment area requirements enacted under new subparts 2, 3, 4 and 5 of part D of the amended Act. Section 819 of the 1990 CAAA limits this exclusion to PM-10, ozone, or CO nonattainment areas classified as marginal, moderate, or serious (and having a population of less than 350,000). (subpart 5 of part D provides no additional NSR requirements for sulfur oxides, nitrogen dioxide, or lead nonattainment areas.) No exclusion from the additional requirements of subparts 2 through 5 is provided for serious PM-10, ozone or CO nonattainment areas having a population of 350,000 or more, or in severe and extreme ozone nonattainment areas.

9. OCS source Applicability

Section 801 of the 1990 CAAA adds a new section 328 to the Act entitled "Air Pollution from Outer Continental Shelf Activities". This section contains provisions pertaining to the control of air pollution from OCS sources. These provisions necessitate a revision of the Federal NSR regulations under both the PSD and NSR nonattainment permit programs to facilitate implementation of OCS regulations. The OCS regulations will be proposed in a separate EPA action and codified at 40 CFR part 55. The reader is referred to the separate OCS proposal package for more specific information on the OCS rules.

10. Tribal Lands Applicability

As discussed more fully in section V.B. of this preamble, the 1990 CAAA grant EPA the authority to treat Indian tribes in certain respects as States, and specifically allows Tribes to develop tribal implementation plans for implementating the NAAQS on tribal lands. Like SIP's, these plans must include all implementation requirements set out in the Act, including complete NSR programs for constructing or modifying existing sources located on tribal lands. Further guidance on the treatment of Indian tribes will be provided as part of a separate rulemaking required by section 301(d)(2) of the Act.

11. Stationary Source Definition

The 1990 CAAA added a new definition of "stationary source" in section 302(z) of title III of the Act, and amended the existing definition already contained in section 111(a)(3). The addition of the new definition appears to strengthen congressional intent that certain internal combustion engines must be subject to control under State permit programs, while requiring the exclusion of those internal combustion engines which fall under the newly defined category of "nonroad engines." Congress authorized EPA to establish emissions standards for categories of nonroad engines that are deemed to contribute significantly to pollution problems. Such authorization preempts States from further regulating such sources of pollution under the stationary source permit process. The EPA presently believes that most internal combustion engines used in stationary applications should be subject to the State permit process for stationary sources.

12. Temporary Clean Coal Technology Demonstration Projects

Section 415(b)(2) of the amended Act provides under certain conditions an exemption from the part D requirements of title I for the installation, operation, cessation, or removal of a temporary clean coal technology demonstration project. Section 415(b)(1) specifies that clean coal technology projects are those funded under the Department of Energy-Clean Coal technology appropriations or similar projects funded by EPA and limits the applicability of section 415 to existing facilities.

Under section 415(b)(2), to qualify for this exemption, a temporary clean coal demonstration project must operate for no more than 5 years. The project must also comply with any applicable SIP for the area in which the project is located and all other requirements for the attainment and maintenance of ambient air quality standards, both during and after the project. Section 415(b)(4) requires EPA to issue rules or interpretive rulings to implement this exemption. As required, EPA has proposed such changes to the rules for steam electric utility units. These proposed changes were published in the Federal Register on June 14, 1991 (56 FR 27630). Readers are referred to this notice for more details on the applicability of this exemption. Under section 415(b)(4), these rules are limited to those areas where EPA is the permitting authority. Where the State is the part D permitting authority, the State may, but is not required to, adopt and submit to EPA for approval rule changes incorporating the section 415(b)(2) exemption in its SIP.

13. Failure to Submit NSR Rules By Statutory Deadlines

The 1990 CAAA require States to adopt SIP revisions subject to EPA approval that incorporate the new preconstruction permitting requirements for new or modified sources that were discussed in the preceding sections. For instance, new permit rules for PM-10 nonattainment areas must be submitted to EPA by June 30, 1992; new rules for ozone nonattainment areas must be submitted by November 15, 1992; new rules for most CO nonattainment areas are due 3 years from the date of the nonattainment designation. The EPA has previously announced its interpretation that the new NSR requirements did not go into effect with passage of the 1990 CAAA but rather become effective in accordance with the schedule for State adoption of SIP revisions (see J. Seitz, "New Source Review (NSR) Program Transitional Guidance," p. 6 (March 11, 1991) (appendix D)).

If these deadlines pass without States submitting NSR revisions, EPA may impose sanctions on delinquent States. Specifically, the Act (in two separate provisions) grants EPA the authority to impose sanctions based on several different types of State failures including a State's failure to submit a SIP or SIP element, or a State's submitting an inadequate SIP or SIP element (see section IV.B.2). The sanctions include reducing a State's highway funds (section 179(b)(1)) or increasing emissions offsets (to at least 2 to 1) for new and modified sources (section 179(b)(2)). In addition to these general sanctions, section 113(a)(5) provides that when the Administrator finds that a State is not acting in compliance with

any requirement or prohibition relating to NSR, the Administrator may issue an order prohibiting the construction or modification of any major stationary source in any area where such requirements apply. In States that delay in revising their SIP's to include the new preconstruction permitting requirements by the statutory deadline, EPA may exercise this authority by proceeding under section 113(a)(5) whenever a particular new source attempts to construct without meeting the NSR requirements added by the 1990 CAAA, or by issuing a general construction ban. As an alternative, the Administrator could issue a contingent order prohibiting construction of any major new or modified source that failed to obtain a permit that met the amended statutory NSR requirements. The EPA will provide additional information on this issue in its NSR regulatory package.

In addition to imposing statutorily required sanctions, EPA is also required by the statute to promulgate a FIP when it finds that a State has failed to make a required SIP submittal or has made an incomplete submission (see section IV.C). Pursuant to this authority, EPA is developing revised NSR regulations that would include, at 40 CFR part 52, a Federal NSR nonattainment permitting program that EPA (or the State pursuant to a delegation agreement) could implement as a FIP in those States that fail to submit NSR regulations by the statutory deadlines. Because of the importance of the increased offset ratios, reduced source thresholds, and other NSR changes to States' overall attainment effort, EPA presently intends to impose this NSR FIP on any State that fails to adopt its own NSR regulations within the deadlines established by the Act. In addition, or until such time as the FIP is in place, EPA may impose any of the sanctions identified above. Of course, once it receives and approves the State's NSR regulations, EPA would, under ordinary circumstances, withdraw the FIP and any sanctions that may have been imposed.

H. General

1. Part D, Subpart 1/Section 110 (to the Extent Not Covered Under Pollutant-Specific)

Subsections (A) through (M) of section 110(a)(2) set forth the elements that a SIP must contain in order to be fully approved. Although Congress substantially amended section 110(a)(2) upon enactment of the amended Act, many of the basic requirements remain the same.

Amended subsection (A) includes the pre-amended subsection (B) requirement that all measures and other elements in the SIP be enforceable. The amended provision specifically authorizes SIP's to contain certain nontraditional techniques for reducing pollution—economic incentives, marketable permits, and auctions of emissions rights. The EPA reads this language to require even these other means of achieving reductions to be enforceable. Section 172(c)(6), one of the general SIP requirements for nonattainment areas, also includes this requirement in essentially the same language.

Subsection (B) carries forth the pre-amended subsection (C) requirement to monitor and compile data on ambient air quality. The EPA historically has promulgated regulations in part 58 of the CFR, indicating the necessary data States need to collect and submit as part of their SIP. The existing regulations remain in effect, pursuant to section 193, to the extent they are not inconsistent with the new law, until EPA elects to amend them.

The enforcement provisions of pre-amended subsection (D) are now under subsection (C). While this provision retains the preexisting requirement that the SIP include a pre-construction review for all new and modified stationary sources, it deletes the previous provision's specific reference to pre-construction review of sources subject to NSPS.

Amended subsection (D) also contains provisions that essentially remain unchanged. It incorporates language from pre-amended subsection (E) requiring States to include SIP provisions prohibiting sources from emitting pollutants that would contribute significantly to nonattainment, interfere with maintenance of the standard, or interfere with PSD or visibility.[34]

Subsection (E) of the amended Act incorporates one provision from pre-amended subsection (F)—clause (E)(ii) reinforces the section 128 requirement that the SIP contain certain requirements as to State boards. In addition, clause (E)(i) of the amended Act includes the pre-amendment subsection (F) requirement that States ensure that the State and/or local governments have adequate resources to implement the plan. This includes a new requirement that the State ensure that nothing in the SIP is otherwise prohibited by any other State or Federal law. Finally, clause (E)(iii) adds a new requirement—that the State retain responsibility for ensuring adequate implementation in cases in which it relies on local implementation of plan provisions.

Subsection (F) carries forth the requirements of pre-amended subsection (F) that concern emission monitoring. The EPA promulgated monitoring regulations at § 51.210 of the CFR and in appendix P to part 51. Under section 193, the existing regulations remain effective to the extent they are not inconsistent with the new law, until EPA elects to amend them.

Amended subsection (G) also carries forth a provision of pre-amended subsection (F). States must provide authority to bring emergency actions (comparable to that granted to EPA in section 303) in cases where a source or a group of sources present an imminent and substantial endangerment to the public health. The EPA has also adopted regulations regarding such authority in 40 CFR 51.150, and these regulations will remain effective under section 193, to the extent they are not inconsistent with the new law, until EPA amends them.

Subsection (H) was not revised by the amendments. It still requires States to provide for the revision of their SIP's (commonly referred to as "SIP calls") in two circumstances: if the NAAQS were revised, or if EPA made a finding that the plan was substantially inadequate to attain the standard. New section 110(K)(5) gives EPA the authority to issue a SIP call.

Amended subsection (I) adds a new requirement to section 110(a)(2). It now states explicitly that any plan or plan revision must meet the applicable requirements of part D (provisions relating to nonattainment areas). Although this is a new section 110(a)(2) provision, it does not add a new requirement to the Act as a whole. The SIP's for nonattainment areas have always been required to meet the part D requirements.

Subsection (J) has also been retained in its preexisting form. It continues the requirement that SIP's meet the applicable PSD and visibility requirements and the associated consultation and public notification provisions of sections 121 and 137, respectively.

[34] The pre-amended section 110(a)(2)(E) required SIP's to contain a provision prohibiting stationary sources from emitting an air pollutant in amounts which will "prevent attainment" in another State. The amended version of this language requires a SIP provision that prohibits emissions that will "contribute significantly to nonattainment" in another State. However, EPA interpreted the pre-amended language in the manner that Congress expressed in the amended Act. See Air Pollution Control Dist. v. U.S. EPA., 739 F.2d 1071, 1090–93 (6th Cir. 1984). In the Senate Report, Congress noted that the pre-amended language presented an impossible standard and noted that it was adopting "significantly contribute" to clarify when a violation of that requirement would occur. S. Rep. No. 228, 101st Cong., 1st sess. 21 (1989).

Amended subsection (K) reinforces EPA's authority to require States to do air quality modeling. Although this is a section 110(a)(2) provision, EPA has always had the authority to require appropriate modeling. This requirement will be met if the State submits its actual modeling in its SIP submittal, and EPA determines that the submitted SIP measures are approvable. The EPA currently does not have regulations concerning modeling for the SIP demonstration purposes,[35] but has issued guidance (e.g., "EPA's Guideline on Air Quality Modeling" (1987)).

The pre-amended provisions concerning permitting fees has been carried over in subsection (L). Although the language of this provision has not changed, in light of the new permit provisions of the amended Act (title V), these requirements could have a different impact from under the pre-amended Act.

Amended subsection (M) is a new provision requiring States to provide for consultation and participation by local political subdivisions affected by the SIP. This section builds on several other section 110(a)(2) requirements that require consultation and participation in regard to specific SIP elements.

2. Conformity

(a) *General requirements.* Section 176(c) provides the framework for ensuring that Federal actions conform to air quality plans under section 110. Under section 176(c), before any agency, department, or instrumentality of the Federal Government engages in, supports in any way, provides financial assistance for, licenses, permits, or approves any activity, that agency has an affirmative responsibility to ensure that such action conforms to the SIP or FIP.

"Conformity to an implementation plan" is defined in section 176(c)(1) (A and B) of the Act as meaning "conformity to an implementation plan's purpose of eliminating or reducing the severity and number of violations of the national ambient air quality standards and achieving expeditous attainment of such standards; and that such activities will not cause or contribute to any new violation of any standard in any area; increase the frequency or severity of any existing violation of any standard in any area; or delay timely attainment of any standard or any required interim emission reductions or other milestones in any area."

The intent of these provisions is explained in the Committee Report:

> Through the evaluation of the air quality impacts of proposed projects before they are undertaken, the conformity provision is intended to foster long range planning for the attainment and maintenance of air quality standards, and to assure that Federal agencies do not take or support actions which are in any way inconsistent with the effort to achieve NAAQS or which fail to take advantage of opportunities to help in the effort to achieve the NAAQS. (Committee expects that the new conformity provisions will be especially helpful in assuring that air quality considerations play a greater role in Federally supported transportation planning efforts, which can have a major impact on air quality and, in some severely polluted areas, are essential as part of the program for achieving the NAAQS ("Committee Report," page 222.)

Section 176(c)(4) required EPA to promulgate general criteria and procedures for determining conformity by November 1991. In the case of transportation plans, programs, and projects, the EPA Administrator, with the concurrence of the Secretary of Transportation, was required to promulgate criteria and procedures for "demonstrating and assuring" conformity by November 1991. Section 176(c)(4)(C) requires EPA to include in such procedures a requirement that each State submit to EPA and the DOT by November 1992 a revision to the implementation plan that includes criteria and procedures for assessing the conformity of any plan, program, or project subject to the conformity requirements. Until this revision is approved by EPA, existing conformity provisions in the SIP remain in effect. The criteria for determining transportation conformity ultimately require the existence of SIP's which contain estimates of emissions from motor vehicles. Until such times as EPA approves these SIP's however, there exists an interim period with criteria for determining transportation conformity which are different from those that will apply after the SIP is approved. These interim criteria are contained in section 176(c)(3). The EPA and DOT jointly issued guidance on transportation conformity for this interim period based on these criteria in June 1991.

The EPA's transportation conformity regulations are still under development, in coordination with DOT. On October 24, 1991, EPA and DOT jointly issued further guidance indicating that the interim transportation guidance issued on June 7, 1991 would continue in effect until the agencies promulgated final conformity regulations. It is unlikely that final regulations will be available significantly before November 1992 to allow States to submit SIP revisions addressing conformity by November 15, 1992, the date the statute requires EPA to call for such submittals in its regulations. The EPA consequently anticipates that in its conformity regulations, it will establish a later date for such SIP submittals in recognition of the impossibility of imposing the 1992 date. The EPA intends to provide States with a reasonable period to develop conformity regulations, such as the year that Congress had in mind in section 176(c)(4)(C). The EPA notes for clarification that States are under no duty to submit conformity regulations until EPA promulgates its regulations and establishes a date for such submittals. Detailed guidance on the overall conformity program will be provided in later rulemaking actions. The guidance below concerns section 176(c)(1)(B)(iii) as applied to nonattainment areas.

(b) *Establishment of emission budgets for transportation-related actions in ozone or CO nonattainment areas.* In general, Federal actions may not delay timely attainment of any standard or any required interim emission reductions or other milestones in any area. More specifically, after the interim period, conformity cannot be determined for a transportation plan or program unless a determination has been made by the metropolitan planning organization that emissions expected from implementation of such plans and programs are consistent with estimates of emissions contained in the applicable SIP. The EPA interprets these provisions to mean that the combination of highway capacity expansion, highway extensions, support for transit, and TCM's in the transportation plan and program must result in vehicle emissions that are not in excess of those contained in the SIP's demonstration of RFP and attainment, despite any difference that may exist between the area's current and forecasted population, employment, and travel demand and those that were assumed at the time of SIP preparation and adoption. In other words, the conformity provisions envision that the SIP will create an emissions budget (for the criteria pollutant and its precursors) for highway vehicles, and that the transportation planning process will be required to produce plans and programs that will result in emissions within that budget. For regional pollutants (ozone, NO_2, CO in some areas, and PM-10 in some areas) the transportation planning process is not required to demonstrate

[35] Under the PSD provisions of section 320, EPA has historically had such modeling rules. In addition, EPA has used these rules as guidance for other purposes, using the guidance as a basis for what is adequate modeling. This new subsection (K) requirement ratifies EPA's past application of the rules, as rules for PSD purposes and as guidance for other purposes.

again that the budgeted emission level will result in attainment. (For pollutants capable of forming hot spots of nonattainment, an air quality determination is required.)

(1) *Areas required to demonstrate RFP and attainment.* For nonattainment areas that are required to demonstrate RFP and attainment by a future year, the SIP revision that contains those demonstrations will necessarily contain statements of the motor vehicle emissions for future years on which those demonstrations are based. These statements will become the emissions budgets that will be used for later conformity determinations. Budgets will thereby be defined for a number of future dates, depending on the RFP and attainment showings required for the area based on its nonattainment status. States should make sure that these budgets are stated clearly and unambiguously in the SIP. For example, assumed temperature inputs and the geographic area of the inventory must be stated so that comparisons can be made later on an accurate basis. The RFP milestones will usually be defined in terms of typical seasonal weekday emissions, like the base and periodic inventory. Attainment demonstrations may be based on individual episode days, however. If so, the SIP must contain an attainment year inventory expressed on the same basis as the other milestone inventories.

The 1990 CAAA allow a single budget for a nonattainment area for a given criteria pollutant or percussor. However, States have the option of specifying the budgets in more detail or disaggregation. For example, an ozone attainment demonstration using a grid model will contain estimates of vehicle emissions for many small grid squares. The SIP may provide that only the sum of vehicle emissions from all grids within the nonattainment area will apply for purposes of conformity determination, or it may divide the area into subareas and establish a budget for each. This approach would provide additional assurance that transportation plans and programs will result in emission patterns that will produce attainment. Such an approach will of course constrain the transportation planning process, and it may later be found useful for the State to submit a SIP revision showing that some other distribution of emissions, or even a different emission total, is also consistent with attainment. A SIP may also provide for alternative emission budgets each of which is shown to produce milestone compliance and/or attainment, for example, different combinations of VOC and NO_x emissions. Finally, a SIP that demonstrates a margin of safety with respect to milestones may identify a budget for conformity purposes which is higher than expected to result from the measures in the SIP, but is consistent with the milestone and attainment date requirements, for purposes of providing the transportation planning process with a cushion for unexpected growth or less than expected effectiveness from TCM's. This sort of cushion for unexpected growth is only a suggestion and EPA wants to affirm its confidence in the SIP planning process. This does not change the substantive requirements for SIP approval, however.

(2) *Other nonattainment areas.* Transitional, submarginal, and marginal ozone nonattainment areas, not-violating CO areas, and moderate CO areas with design values of 12.7 ppm or less are not required to include specific attainment demonstrations or to show compliance with interim milestones. Consequently, they are not required to contain statements of future emissions which could be used as emissions budget for later conformity determinations. Nevertheless, EPA believes that the intent of section 176(c) is to make conformity a meaningful process for these areas, rather than to release the transportation planning process of all rsponsibility for area-wide motor vehicle emissions. On the other hand, the need to provide emissions criteria for future conformity determinations should not defeat the evident congressional intent to temporarily excuse these areas from having to develop and implement control strategies beyond vehicle fleet turnover, Federal measures, and required measures specified for them in the Act. It also seems clear that Congress did not intend these areas to be subject to any serious constraint on VMT and industrial activity growth prior to the date on which they are vulnerable to being reclassified for failure to attain. To satisfy these intents, these States should choose from two options as described below, and clearly indicate their selection in the SIP.

First option: The State may elect to extend the interim conformity criteria of section 176(c)(3)(A) for the entire period prior to EPA approval of either a section 175(A) maintenance SIP or—following bump up—a SIP that meets RFP and attainment requirements. These interim criteria would otherwise expire when EPA approves the conformity SIP revision described in section III.H.1.a. The most important of these criteria is that the transportation plan and program must contribute to emissions reductions, i.e., that implementation of the plan and program will cause lower emissions than if new projects were not implemented. This option requires the least analysis by the State, but precludes transportation plan-caused increases in emissions that might in fact not interfere with attainment by the deadline due to the large reductions resulting from other measures. In the joint EPA/DOT interim conformity guidance, these areas were implicitly placed under this option and will remain there unless a SIP revision exercising the second option is approved.

Second option: The State may voluntarily submit, as a SIP revision, an attainment demonstration and corresponding motor vehicle emissions budget, like higher classified areas. This may show that transportation plans that cause emissions increases are in fact compatible with attainment, thereby providing the transportation planning process flexibility to adopt such plans later.

(3) *Maintenance plan.* More specific guidance on the content of maintenance plans may be provided at a date closer to when States will be preparing these plans. For now, States should be aware that transportation planning in areas redesignated to attainment and operating under a maintenance plan will also be subject to the emissions budget concept. A budget for motor vehicle emissions must be establishment in the maintenance plan and shown to be consistent with the maintenance demonstration in light of expected emissions from other sources.

(4) *Emission budgets during the replanning period immediately following failure to meet a milestone or failure to attain.* Failure to meet a milestone or to attain by the expected date may be due to inaccurate inventorying of 1990 emissions, inaccurate air quality modeling, excess growth in nonvehicle emissions, or excess growth in vehicle emissions despite the operation of the conformity process. In such cases, the adequacy of the emissions budgets for motor vehicles is called into question and new budgets must be developed as part of the replanning that is required by the 1990 CAAA. Until a new SIP is approved or a Federal plan is promulgated, the previous budgets will continue to be applied for demonstrating conformity.

(c) *Identification and scheduling of transportation control measures.* Section 176(c)(2)(B) requires that transportation improvement programs provide for timely implementation of TCM's consistent with schedules included in the applicable SIP. In

general, EPA will allow emission reduction credit only for TCM's that are fully adopted and for which a sponsoring agency has made an enforceable commitment of its own; nevertheless, the provision regarding transportation improvement programs will be an important aid to implementation. Effective implementation of this provision will require that SIP's adequately describe TCM's with respect to their design, location, scope, scale, and implementation schedule including milestones prior to full adoption.

3. Planning Requirements Including Section 174

Section 174, Planning Procedures, was broadened to ensure that State and local authorities share in the development, implementation, and enforcement of the SIP. This section requires the State to certify the planning organization and to identify the specific State, local, or regional agencies that will develop, adopt, and implement the elements of the SIP. In addition, a new subsection was added to clarify that when a nonattainment area includes more than one State, the affected States may jointly undertake planning procedures. States are required to review and update, as necessary, their SIP planning procedures by November 1992.

Two options are generally available to States through section 174: To continue using the planning organization previously certified, or to certify a new planning organization. If a new planning organization is certified, section 174 requires that organization to include elected officials or local governments in the affected area and representatives of the State air quality planning agency, the State transportation planning agency, the metropolitan planning organization designated to conduct the continuing cooperative and comprehensive transportation planning process for the area under section 134 of title 23, U.S.C., the organization responsible for the air quality maintenance planning process, and any other organization with responsibilities for developing, submitting, or implementing any aspects of the SIP.

The EPA encourages the States to certify either the previous organization or a new organization well before the November 1992 deadline. Early certification will be helpful to the various agencies that must meet deadlines by this date.

Additional guidance on the new section 174 provisions is contained in the update of the 1978 Transportation-Air Quality Planning Guidelines by EPA and DOT, due in November 1991. Previous guidance issued by EPA and DOT in 1977 specific to section 174 was superseded by this 1991 update. The EPA will soon update Subpart M, Intergovernmental Consultation, of the "Code of Federal Regulations" to reflect the new section 174 requirements.

4. Economic Incentives

Since 1980 EPA has developed several programs to allow industry and States more flexibility in meeting statutory requirements of the 1977 Act. One of these initiatives is the Emissions Trading Policy Statement (ETPS) (51 FR 43814, December 4, 1986). The ETPS allows source-specific SIP revisions for sources to trade emissions reductions credits (ERC's) with other sources to meet some emission limitations. All ERC's must be permanent, real, quantifiable, (federally) enforceable, and surplus (i.e., not otherwise needed for an attainment strategy or other already existing control requirements). The ETPS also allows States to develop and adopt generic emission trading programs into their SIP. To receive EPA approval, a generic emission trading program must contain replicable procedures to ensure that all ERC's meet the criteria above.

As discussed below, the CAAA include several new economic incentive programs as well as changing statutory language that may lead to modification to existing policies, including updating of the ETPS. The EPA has started work to inventory potential discrepancies between the ETPS and the CAAA. If warranted, EPA would issue a policy interpretation of the ETPS that EPA will use when applying the ETPS for the SIP approval process.

The 1990 CAAA encourage innovation through the use of market-based approaches, not only in the title IV acid rain program, but also in title I SIP provisions. The use of economic incentives are explicitly allowed for in the general SIP requirements (section 110(a)(2)), the general provisions for nonattainment SIP's (section 172(c)(6)), and in the system of regulations for controlling of emissions from consumer or commercial products (section 183(e)(4)).

Beyond these general allowances for economic incentives, use or considering the use of an option to implement economic incentives is mandated in certain cases. These cases include State failure to submit a compliance demonstration or to meet applicable milestones for RFP for serious, severe, and extreme ozone nonattainment areas (sections 182(g)(3) and 182(h)) and State failure to submit a milestone demonstration, to meet a required specific emissions reductions milestone, or for serious CO nonattainment areas to attain the standard (sections 187(d)(3), 187(g)).

Section 182(g)(4)(A) defines such a State economic incentive program as one that is consistent with EPA rules, the publication of which is mandated by November 15, 1992 (section 182(g)(4)(B)). According to section 182(g)(4)(A), the State program may include but is not limited to, systems of emissions fees, marketable permits, or State fees on the sale or manufacture of products, as well as incentives and requirements to reduce vehicle emissions and VMT's, including any of the TCM's in section 108(f).

One such TCM is the accelerated retirement of vehicles. It is estimated that in some areas of the country, as few as 20 percent of the vehicles produce up to 80 percent of the total vehicle emissions. Because of less stringent emission standards, deterioration, tampering, malmaintenance, old vehicles can emit at very high levels. An accelerated retirement program encourages the removal and destruction/recycling of these older vehicles by offering individuals money of their "old" cars. An incentive is created for owners to voluntarily trade in these vehicles for new, lower emitting vehicles.

The EPA believes that an accelerated retirement program can be an important part of an attainment strategy by providing greater flexibility to industry in complying with emission standards. By this notice, EPA is announcing the availability of an information document of the accelerated retirement of vehicles programs, as required under section 108(f). The document outlines the theory behind accelerated vehicle retirement, considers desirable elements of program design, and discusses the experience of a pilot program sponsored by UNOCAL Corporation in Southern California.

States may include scrappage programs in SIP submissions. Scrappage emissions reductions will get full credit toward SIP attainment demonstrations. To the extent permissible by law, credits generated through scrappage programs may be used to meet air quality limitations.

The EPA interprets 182(g)(4)(A) as allowing a broad range of market-based strategies. The State program is to be "nondiscriminatory" and consistent with inter-State commerce laws (section 182(g)(4)(A)).

The EPA's economic incentive rules are to include model plan provisions for permitted stationary sources, area sources, and mobile sources, as well as

guidelines that specify how revenues generated by the plan provisions shall be used (section 182(g)(4)(B)). These rules will address issues such as setting baselines, banking provisions, administrative requirements and consistency with the title V Permitting Program, title VII Enhanced Monitoring and Compliance Certification Program, and other provisions discussed elsewhere in this notice. The EPA currently views these rules as guidance that is intended to encourage early implementation of appropriate economic incentive programs to potentially avoid such failures in the future. The EPA hopes that the rules will stimulate innovative, market-based approaches, where appropriate, in meeting long-term milestones and goals. The EPA also will give consideration to using these rules as guidance in developing Federal rules and FIP strategies when necessitated by State failures in meeting RFP milestones. The EPA will solicit comments on its economic incentive program rules at the time of proposal of that rulemaking.

The EPA encourages the development of economic incentive programs that increase flexibility and stimulate the use of more cost-effective strategies, as well as provide incentives for continuing to develop and implement innovative emissions reductions technology and strategies beyond those specifically mandated through standards and regulations. However, EPA believes that the implementation of economic incentive programs must also meet the standards of enforceability currently found in traditional regulatory programs.

The Agency wishes to clarify its position regarding mobile/stationary source trading. The agency is very supportive of efforts to trade emission reductions among mobile and stationary sources to the extent such trades would result in a less costly mix of measures to attain the standards and would meet the relevent Clean Air Act requirements. EPA will work with states and individual sources to highlight and develop such trading opportunities and will be taking various steps to encourage such trades.

In particular, EPA will clarify which Clean Air Act requirements can be met by trading emission reductions among mobile and stationary sources and how such trading can be implemented, through guidance it will issue as part of the economic incentive rules and elsewhere as necessary. This guidance will encourage states to consider such trades as they develop their state implementation plans.

Mobile source programs which could generate tradeable credits include, but are not limited to:

- An accelerated vehicle retirement program,
- A program to convert cars or fleets to cleaner fuels, and
- A program to expand the geographic coverage of inspection and maintenance programs.

States can allow stationary sources to use these reductions on an individual basis to meet certain emission reduction requirements or to generate tradeable offsets to help meet new source review requirements where not prohibited by the statute.

5. Section 172(c)(1) Requirement for All Reasonably Available Control Measures (RACM)

Section 172(c)(1) requires the plans for all nonattainment areas to provide for the implementation of all RACM as expeditiously as practicable. The EPA interprets this requirement to impose a duty on all nonattainment areas to consider all available control measures and to adopt and implement such measures as are reasonably available for implementation in the area as components of the area's attainment demonstration.

The EPA has previously interpreted the RACM provisions of the pre-amended Act. The EPA is today changing its prior interpretation and adding specific interpretations with respect to PM-10. The following discussion explains the origins of EPA's past interpretation and the rationale for the current changes to that interpretation.

The EPA previously interpreted this provision under the pre-amended Act in its guidance at 44 FR 20372, 20375 (April 4, 1979). The EPA there indicated that where measures that might in fact be available for implementaton in the nonattainment area could not be implemented on a schedule that would advance the date for attainment in the area, EPA would not consider it reasonable to require implementation of such measures. The EPA continues to take this interpretation of the RACM requirement.

Also in the 1979 guidance, EPA created a presumption that all of the TCM's listed in section 108(f) were RACM for all areas, and required areas to specifically justify a determination that any measure was not reasonably available based on local circumstances. The EPA reiterated that guidance at 46 FR 7182, 7187 (January 22, 1981).

However, based on experience with implementing TCM's over the years, EPA now believes that local circumstances vary to such a degree from city-to-city that it is inappropriate to presume that all section 108(f) measures are reasonably available in all areas. It is more appropriate for States to consider TCM's on an area-specific, not national, basis and to consider groups of interacting measures, rather than individual measures.

The section 108(f) measures should be considered by States as potential air quality control options. Further, the list should not be viewed as exhaustive, but rather indicative of the types of TCM's States should consider in developing the TCM portion of their control strategy. A recent study for EPA identified more than 70 individual measures within broad TCM categories that could be considered as potential controls (SAI, IT, PES 9-90). In addition, any measure that a commenter indicates during the public comment period is reasonably available for a given area should be closely reviewed by the planning agency to determine if it is in fact reasonably available for implementation in the area in light of local circumstances.

Local circumstances relevant to the reasonableness of any potential control measure involve practical considerations that cannot be made through a national presumption. Various TCM's must be locally coordinated to minimize contradictory results and maximize mutually supportive outcomes. Feasibility of TCM implementation can thus be particularly complicated, and EPA recognizes the importance of assessing candidate TCM's in the context of each particular area's situation.

Finally, with respect to TCM's or any other control measures, EPA does not believe that Congress intended the RACM requirement to compel the adoption of measures that are absurd, unenforceable, or impracticable (see 55 FR 38328, September 18, 1990).

The EPA, therefore, concludes that it is inappropriate to create a presumption that all of the measures listed in section 108(f) are per se reasonably available for all nonattainment areas. All States must, at a minimum, address the section 108(f) measures. The EPA believes that at least some of the measures will be reasonably available for implementation in many nonattainment areas. Where a section 108(f) measure is reasonably available, section 172(c)(1) requires its implementation.

The Senate managers' explanation of the new transportation control provisions includes a statement endorsing EPA's 1979 guidance on RACM as recently construed by the Court of Appeals for the Ninth Circuit in *Delaney* v. *EPA*, 898 F. 2d 687 (1990). 136 Cong. Rec. S16971 (daily ed. Oct. 27, 1990). In that case, the court held that

EPA was bound to apply its then-applicable 1979 RACM guidance by its own terms, which created the presumption that all section 108(f) measures were reasonably available. However, the court did not hold that the statute required such an interpretation of the RACM requirement, nor that EPA could not in the future revise its RACM guidance. The EPA remains free to alter its past guidance consistent with a reasonable interpretation of statutory requirements in light of historical experience implementing TCM's.

The legislators who cited the *Delaney v. EPA* decision had lobbied in the Senate Committee bill for a requirement that all section 108(f) measures be implemented in severe ozone nonattainment areas. This position was however abandoned in the final Senate bill. Any statements in the subsequent Senate debates concerning implementation of all section 108(f) measures therefore do not necessarily reflect the views of the Senate as a whole, let alone the entire Congress.

Finally, EPA also notes that it believes the court in *Delaney v. EPA* mischaracterized EPA's guidance in one respect. The court stated that in light of the previous presumption that section 108(f) measures were reasonably available, "a state can reject one of these measures only by showing that the measure either would not advance attainment, would cause substantial widespread and long-term adverse impact, or would take too long to implement." *Delaney*, at *692*. In the case before the court, EPA had argued that certain measures would have substantial widespread and long-term adverse impact. However, EPA believes that its revised RACM interpretation would provide for the rejection of control measures as not reasonably available for various reasons related to local conditions even where such costs fell short of substantial widespread impact. This is especially true in the absence of a presumption that any given measure is per se reasonably available.

Section 177 permits a State to adopt and enforce new motor vehicle emission standards that are identical to those adopted by California and for which a waiver under section 209(a) has been granted. The EPA is not able at this time to specify the emissions reduction credits that may be available to a State that adopts emissions standards identical to California's so-called "Low Emission Vehicle (LEV) program." The EPA is presently developing the updated version of its mobile emissions model—MOBILE5—which will include EPA's estimates of the SIP credits available to States adopting the LEV standards. The EPA plans to complete work on the model in June 1992, at which time it will be made available to States and the public.

The EPA has recently been asked whether a State, which requires under section 177, that new vehicles sold in the State comply with the California standards, must also require that those vehicles use the fuel or fuels upon which they were certified as meeting the California standards. The EPA is undertaking a legal and policy review of this question.

PM–10 is different from O_3 and CO in that here may be many PM–10 areas where mobile sources do not significantly contribute to the nonattainment problem in the area. Section 190 of the Act, which applies specifically to PM–10, recognizes this distinction. Section 190 specifies those source categories for which EPA is required to issue guidance on RACM. Section 190 also provides that EPA shall examine other categories of sources contributing to nonattainment of the PM–10 standard and determine whether additional guidance on RACM is needed. Section 190 represents a statutory expression of those sources generally deemed to contribute to the PM–10 nonattainment problem and requires that EPA determine whether other sources contribute to the PM–10 nonattainment problem and, as necessary, issue RACM guidance for such sources. Thus, in the discussion addressing PM–10 RACM, EPA takes the position that the available control measures EPA has identified in its guidance issued under section 190 are the suggested starting point for determining RACM. Accordingly, the affected State should evaluate these measures and other measures that a commenter demonstrates may well be reasonably available in an area considering their technological and economic feasibility in the area to which the SIP applies.

The EPA received comments requesting that additional control measures, including the TCM's identified in section 108(f) of the amended Act, be added to EPA's guidance on control measures issued under section 190. At this time, EPA has insufficient information to conclude that the sources addressed by these measures contribute to the PM–10 problem in a sufficient number of areas in the nation such that section 190 guidance is necessary. Thus, EPA does not presently believe that each of these measures should be added to the list of measures which is the suggested starting point for the RACM analysis for each of the PM–10 nonattainment areas in the nation. This is not to suggest that States should ignore such measures. In those PM–10 nonattainment areas where mobile sources do significantly contribute to the PM–10 air quality problem, consistent with the statement above regarding section 108(f) measures, the State must, at a minimum, address the section 108(f) measures. Similarly, it follows that where a section 108(f) measure is reasonably available, sections 189(a)(1)(c) and 172(c)(1) require its implementation.

6. Redesignations

Section 107(d)(3) of the Act specifies the procedures and reqirements for changing an area's designation. Subparagraphs (A), (B), and (C) describe the requirements and schedules for such changes when initiated by the Administrator. An additional discussion of the reqirements and schedules is provided in 56 FR 16274 (April 22, 1991) describing the notification of States that certain PM–10, SO_2, and lead areas should be redesignated.

Section 107(d)(3)(E) specifies the conditions under which the Administrator may approve a Governor's request [submitted in accordance with section 107(d)(3)(D)] for redesignating an area from nonattainment to attainment. These conditions are as follows:

(1) The Administrator has determined that the NAAQS has been attained.

(2) The Administrator has fully approved the applicable implementation plan under section 110(k).

(3) The Administrator has determined that the improvement in air quality is due to permanent and enforceable reductions in emissions resulting from implementing the applicable implementation plan and applicable Federal air pollutant control regulations and other permanent and enforceable reductions.

(4) The Administrator has fully approved the maintenance plan for the area as specified in section 175A.

(5) The State has met all applicable requirements for the area under section 110 and part D.

The remainder of this discussion describes how EPA will review a State request to redesignate an area from nonattainment to attainment, and what criteria EPA will use in determining whether the above conditions have been met.

(a) *Requests submitted before enactment.* Some States had submitted requests for redesignation prior to enactment of the 1990 CAAA that EPA

was unable to process before enactment. The EPA plans to review these requests carefully to determine whether the above conditions (as described further under "Requests Submitted After Enactment"), including the maintenance plan requirement, have been essentially satisfied by the State's actions under the provisions of the Act prior to enactment of the 1990 CAAA. The EPA will determine on a case-by-case basis what additional information is needed in order for the requests to be approvable. At a minimum, an appropriate maintenance plan showing maintenance of the standard at least 10 years from the time of EPA approval will still be needed before the request for redesignation is considered complete.

The maintenance plan requirement is not applicable in the very narrow circumstance where the amended Act does not apply to the redesignation. At the time of enactment, November 15, 1990, two redesignation actions were substantially completed—the Atlanta CO redesignation and the Green Bay SO_2 redesignation. Because the States had completed all necessary action, the Agency had done everything but prepare a final approval notice, and no adverse comments were received, EPA determined that the new redesignation requirements were not applicable (see 56 FR 37285 (August 6, 1991); 57 FR 3013 (January 27, 1992)).

States should consult with their EPA Regional Offices to determine what additional information is needed to supplement their requests for redesignation, including information to satisfy any new requirements under section 110 or subpart 1 of part D of the 1990 CAAA. For example, EPA plans to assume that the operating permits program requirements of title V (including the requirement for permit fees) that will be implemented in States over the next few years will effectively satisfy the section 110(a)(2)(L) requirement for permit fees in the subject areas (i.e., in areas for which requests for redesignation were submitted prior to enactment of the Act). States should consult with the Regional Offices about other new requirements under section 110 or subpart 1 of part D in the Act, and whether any additional State actions will be needed to satisfy those requirements.

The EPA believes that the language of section 107(d)(3)(E)(iii) clearly requires that the emission reductions that were achieved and enabled the area to attain the standard must be linked to enforceable regulations. Many of these regulations are rules representing RACT as required for an area before and/or after enactment of the 1990 CAAA (depending on the particular area). Even though EPA has found a range of deficiencies in State RACT rules and has notified many States that corrective action is needed,[36] EPA believes that the current emphasis for areas that had submitted a request for redesignation prior to enactment should be on the enforceability of the rules in place at the time of enactment. Therefore, for these types of areas, the States must make whatever corrections are necessary to ensure that the rules are and continue to be fully enforceable.[37]

As a matter of course, EPA will not require the full set of RACT corrections (e.g., lower source size applicability thresholds) in areas that had submitted a redesignation request prior to enactment and that were not violating the standard at the time of enactment. Imposing more stringent rules (unless needed for maintenance) appears to be unnecessary since applying the current State rules has resulted in attainment of the standard. In other words, the uncertainty of mathematical models or other techniques for projecting attainment when planning first occurred for these areas strongly supported the need for any possible "margin of safety" that might be provided by RACT measures or any other measures. But now that attainment has occurred, the justification or need for the margin of safety that might have been produced by the RACT measures (adopted and implemented in a manner consistent with EPA guidance and policies) is lessened. However, to satisfy the goals of section 107(d)(3)(E)(iii) and to ensure the soundness of the maintenance plan (discussed below), these areas still must ensure that their RACT rules are consistent with any guidance or policies concerning the enforceability of rules (e.g., adopting the most recent EPA test methods and procedures available at the time of the redesignation request). In addition to ensuring that appropriate RACT corrections have been made to ensure that the rules are enforceable, the State must show that the emission inventory that occurred during the time of no violations of the standard is based on the implementation of permanent and enforceable regulations rather than a "temporary" reduction in emissions, which may have resulted from a suspension of industrial production or other temporary change in the industrial or economic activity in the area. Reductions in emissions from shutdowns are considered permanent and enforceable to the extent those shutdowns have been reflected in the SIP, and all applicable permits have been modified accordingly.

During the pendency of these redesignation requests, EPA will not require these areas to adopt amended NSR program elements. However, these areas must continue to apply their existing NSR program or comply with the NSR permitting requirements of 40 CFR part 51, appendix S. Prior to redesignation, these areas also must adopt and be prepared to implement a permitting program that satisfies the requirements of part C and EPA's regulations implementing the PSD program. Areas should consider the need for offsets under the part C program to ensure that new sources do not "cause or contribute" to an increase in pollutant levels that would take the area out of compliance. If the area's redesignation request is rejected and the statutory deadlines for adopting amended part D permitting rules for the pollutant in question have passed, EPA may impose a construction ban pursuant to section 113(a)(5) until such time as the area adopts a part D program satisfying the NSR requirements of the CAAA.

The requirements of the applicable SIP will continue in force and effect even after the request has been approved and the area has been redesignated to attainment except to the extent the maintenance plan shows that such measures are not necessary to maintain the standard. The requirement for new or modified control measures or regulations for these areas is discussed below under "Improvement in Air Quality Results From Implementation of the SIP."

(b) *Requests submitted after enactment.* Any requests for redesignation from nonattainment to attainment that are submitted to EPA after enactment of the 1990 CAAA must satisfy the conditions in section 107(d)(3)(E) that were listed at the beginning of this section (III.H.6). Certain of these conditions (listed above) are further described below.

(1) *Determining whether the area has attained the ambient standard.* The NAAQS for ozone and CO are specified in 40 CFR 50.9 and 50.8, respectively.

[36] The EPA issued SIP calls to a number of States in 1988 and 1989 requiring that they correct their RACT rules as necessary to be consistent with EPA guidance and policies. In addition, new section 182(a)(2) specifically requires all ozone nonattainment areas with a marginal or above classification to correct or add RACT requirements for complying with the provision of pre-enactment section 172(b).

[37] See "Issues Relating to VOC Regulations, Cutpoints, Deficiencies, and Deviations," U.S. Environmental Protection Agency, Office of Air Quality Planning and Standards, Air Quality Management Division, May 25, 1988.

Appendix H of 40 CFR 50.9 (Interpretation of the National Ambient Air Quality Standards for Ozone) explains the procedures for determining whether violations of the ozone standard have occurred. A recent EPA memorandum [38] provides additional guidance on calculating "design values" and attainment for ozone and CO.

Any request for redesignation should be based on the most recently available and quality-assured air quality monitoring data, collected in accordance with the requirements of 40 CFR part 58.

(2) *Full approval of the applicable implemention plan.* Section 110(k)(3) allows the Administrator to approve or disapprove a plan revision in full or in part. Although section 110(k)(4) provides for conditional approval of a SIP revision in certain circumstances, a conditionally-approved plan revision is not to be treated as satisfying the requirements of the Act until the entire revision has been approved as satisfying the Act requirements. Therefore, in order for the request for redesignation of an area from nonattainment to attainment to be approved, the State must have satisfied all requirements of the Act that apply to the area. The requirements have not been met if a revision has been only partially approved (or has been partially disapproved).

(3) *Improvement in air quality results from implementing the SIP.* Section 107(d)(3)(E)(iii) requires that prior to approving a request for redesignation of an area from nonattainment to attainment, the Administrator must determine that the improvement in air quality has resulted from permanent and enforceable emission reductions resulting from implementing the SIP and applicable Federal measures and/or from other permanent and enforceable measures. Before it makes such a determination, EPA will require that these measures satisfy EPA guidance or requirements regarding enforceability, and that the emission inventory for the area during the time in which attainment has been demonstrated is based on permanent and enforceable regulations or measures.

The EPA believes that the language of section 107(d)(3)(E)(iii) clearly requires that the emission reductions that were achieved and enabled the area to attain the standard must be linked to enforceable regulations in the SIP. The EPA will assume that all control measures and regulations in the SIP for an area contribute to attainment of the standard. Therefore, any request for redesignation to attainment must show that permanent and enforceable rules are in place to implement these requirements. This showing will also support the State's demonstration that it has met all requirements that apply to the areas under section 110 and part D (discussed below under "Meeting section 110 and part D Requirements").

In addition to showing that it has developed enforceable rules and measures implementing the requirements that apply to the area, the State must show that the emission inventory that occured during the time of no violations of the standard is based on the implementation of permanent and enforceable regulations rather than a temporary reduction in emissions, which may have resulted from a suspension of industrial production or other temporary change in the industrial or economic activity in the area. Reductions in emissions from shutdowns are considered permanent and enforceable to the extent those shutdowns have been reflected in the SIP and all applicable permits have been modified accordingly.

(4) *A fully approved maintenance plan.* The State must submit a maintenance plan in accordance with section 175A for any area the State requests be redesignated from nonattainment to attainment. This plan must provide for maintenance of the standard for at least 10 years from the anticipated date of redesignation. Eight years after the redesignation date, the State will be required to revise its SIP to provide for maintenance in the area for an additional 10 years (beyond the first 10-year period).

The maintenance plan consists of three basic components: An emission inventory, a maintenance demonstration, and contingency measures. The inventory must include the emissions that occurred during the same period associated with attaining the national standard. The EPA plans to issue additional guidance on preparing these inventories and other components (discussed below) of the maintenance plan.

For the maintenance demonstration, the State must either demonstrate that the future emission inventory will not exceed the inventory that existed at the time of the request for redesignation, or conduct an appropriate modeling analysis consistent with EPA's "Guidelines on Air Quality Models" that shows that the future mix of sources and emission rates when combined with control strategy for the area, will not cause any violations of the ambient standard. Under either alternative, the State must identify the mechanism that will be used to track the progress of the maintenance plan. Where the maintenance demonstration is based on the inventory, the State may choose to periodically update the emission inventory or periodically review the factors used to develop the inventory to determine whether any significant changes have occurred. Where the demonstration is based on modeling, the State may periodically review the assumptions and input data for the modeling analysis. Such reviews and/or updates may typically be done every 3 years. The maintenance plan must contain any additional measures as necessary to ensure that the standard will not be violated. Any future measures must be implemented before any violations might be anticipated, based on tracking of the emission inventory (under the first alternative, above) or the modeling assumptions and input data (under the second alternative). The maintenance plan must also include contingency measures to ensure that any violations can be quickly addressed should such violations occur after the area is designated to attainment. The EPA will review each request for redesignation on a case-by-case basis to determine what contingency measures are needed for possible violations. Section 175(d) requires the maintenance plan to contain, at a minimum, a commitment for the implementation of all measures that were part of the control strategy (i.e., the SIP) for the area prior to redesignation should violations occur in the future.[39] The plan should provide for prompt implementation of these measures with minimal administrative action on the part of the State or other government agency responsible for its implementation.

(5) *Meeting section 110 and subpart 1 (of part D) requirements.* In order to be redesignated from nonattainment to attainment, an area must have met all of

[38] "Ozone and Carbon Monoxide Design Value Calculations," William G. Laxton, Director, Technical Support Division, Office of Air Quality Planning and Standards, June 18, 1990.

[39] This provision implies that the State would have removed or reduced the stringency of certain measures in the SIP after the area was redesignated to attainment. The EPA is soliciting comment on the circumstances in which the State may remove or modify measures that are specifically required (e.g., enhanced I/M) or are required as part of the demonstration of attainment. Any approach would have to ensure that the maintenance plan would prevent future violations either through a limit on overall emissions or a rigorous modeling analysis, or some combination. EPA also solicits comment on the emission limit and modeling analysis should be applied. For example, should a limit on overall emissions be required at least for some period beyond the time the area is designated to attainment?

the applicable requirements in section 110 (regarding general provisions needed in a SIP) and in part D (regarding the requirements for nonattainment plans). Part D contains general provisions that apply to all nonattainment plans and certain sections that apply to specific pollutants (e.g., section 182 applies for ozone nonattainment areas).

Subpart 1 of part D contains the general requirements for nonattainment plans. Section 172(c) describes the provisions required in nonattainment plans. The requirements of subparagraphs (1) through (9) of section 172(c) must be satisfied before a request for redesignation can be approved. In addition, the conformity requirements of section 176 must be met. The discussion below describes further how EPA will assess compliance with these provisions.

(i) RFP. The requirements for RFP will not apply in evaluating a request for redesignation to attainment since, at a minimum, the air quality data for the area must show that the area has already attained. Showing that the State will make RFP towards attainment will, therefore, have no meaning at that point.

(ii) Emission inventory. The emission inventory requirements of section 172(a)(3) will be satisfied by the inventory requirements of the maintenance plan, as discussed above.

(iii) Identification of certain emission increases. Section 172(c)(4) requires an area, in developing its plan for attainment, to identify expected emissions increases that will result from new or modified major sources in a "zone to which economic development should be targeted" according to section 173(a)(1)(B). These provisions effectively allow the State to provide a "growth allowance" for sources in such an area in lieu of the offset requirements under section 173(a)(1)(A). Since this is an optional alternative to requiring the acquisition of offsets under section 173(a)(1)(A), it is not a prerequisite to redesignation. Moreover, once the area is redesignated attainment, these provisions will not apply since the PSD requirements of part C will become effective (see discussion in next section).

(iv) NSR Permit program. Generally, the requirements of the part D NSR permitting nonattainment program will be replaced by the PSD program once an area is redesignated to attainment.[40] (The exception is in ozone transport regions where the part D NSR requirements applicable to moderate areas would continue to apply along with PSD (part C) requirements.) However, to ensure that the PSD program can become fully effective immediately upon redesignation, EPA will require an area to make any needed NSR corrections to their part C NSR programs prior to redesignation.

(v) Other measures to provide attainment. Since attainment will have been reached, no additional measures are needed to provide for attainment. The need for additional measures to ensure that maintenance continues is addressed under the requirements for maintenance plans. Areas should consider the need for offsets under the part C program to ensure that new sources do not "cause or contribute" to an increase in pollutant levels that would take the area out of compliance.

(vi) Compliance with section 110(a)(2). In the requests for SIP redesignation, States must show that their plans satisfy the requirements under section 110. These requirements specify that the plans must contain enforceable emission limits, monitoring requirements, procedures to prevent interstate pollution problems, adequate resources to carry out the control programs, and other provisions related to the development and administration of effective air pollution control programs; a more detailed discussion of these provisions is located in section H. States should consult with their EPA Regional Offices if additional guidance is needed with respect to section 110 requirements.

(vii) Equivalent techniques. The provisions of section 172(c)(8) allow the State to use equivalent techniques for modeling, inventorying, or other planning activities unless EPA determines that the techniques are less effective. This allowance will continue to apply with respect to the requirements of the maintenance plan.

(viii) Contingency measures. The section 172(c)(9) requirements for contingency measures are directed at ensuring RFP and attainment by the applicable date. These requirements no longer apply when an area has attained the standard and is eligible for redesignation. Furthermore, section 175(A) for maintenance plans (discussed above) provides specific requirements for contingency measures that effectively supersede the requirements of section 172(c)(9) for these areas.

(ix) Conformity. The State must show that the section 176 requirements of conformity have been met. The SIP conformity provisions must be consistent with EPA guidance issued pursuant to section 176(c)(4).

(6) *Meeting other part D requirem* For classified ozone areas, the applicable requirements of sections 1 184, and 185 must be met. For CO area the applicable requirements of section 187 must be satisfied. Satisfying these requirements for redesignation purposes is particularly important since the contingency measures of the maintenance plan will require, at a minimum, that the measures in place just before redesignation be implemented if future violations occur.

7. Transition Issues

(a) *Phase II of SIP calls.* Prior to enactment of the 1990 CAAA, the EPA issued SIP calls under section 110(a)(2)(H) of the Act to many areas based on a finding that their SIP's were substantially inadequate to provide for timely attainment of the ozone and/or CO NAAQS. In these SIP calls, EPA stated that States should respond in two phases to produce SIP's that would be adequate to attain and maintain the standards. The EPA first required States, in Phase I of their responses, to update their emissions inventories and make corrections in previously required regulations imposing RACT on exist stationary sources. Phase I responses were due generally by September 30, 1989.

The EPA advised States that they could delay submitting Phase II responses which included a full attainment demonstration and all additional regulations necessary to support such demonstrations, until EPA completed its policy on post-1987 nonattainment planning. Since EPA did not complete its post-1987 ozone/CO policy in anticipation of passage of the 1990 CAAA, EPA has never set a generally applicable date for Phase II SIP call responses. However, the basis underlying the SIP call remains valid even under the amended Act. The SIP's for the affected areas are still substantially inadequate to attain the relevant NAAQS. Since the date for submitting Phase I SIP call responses has already passed, and the amended Act requires all marginal and above ozone nonattainment areas subject to the RACT-correction aspects of the SIP calls to submit those corrections within 6 months of enactment, the requirement for Phase I responses to the SIP calls remains in effect for these areas. Thu these areas should have submitted RACT corrections by May 15, 1991, pursuant to section 182(a)(2)(A) (see Section III.A.2.(b)).

[40] See footnotes 8 and 18.

However, as to Phase II SIP call responses, the amended Act alters both the substantive requirements and submission deadlines for full attainment demonstrations and their component control measures. Thus, although the obligation to submit a SIP adequate to attain and maintain the NAAQS remains in all SIP call areas, both the necessary elements of such plans and the timing of the plan submissions is now governed by the requirements of sections 182 and 187 of the amended Act. The EPA therefore will not require Phase II SIP call response submissions on schedule different from the schedules established by those sections. States should respond to Phase II of the SIP calls by making the submissions otherwise required by sections 182, 184, and 187. This new Phase II schedule supersedes any schedule EPA may have established for any area prior to enactment of the 1990 CAAA.

It should be noted that section 173(b) of the Act restricts the use of growth allowances by all areas that received SIP calls under the 1977 Act. Since EPA is keeping the pre-1990 CAAA SIP calls in effect, use of a growth allowance is restricted in any area that received a SIP call under the 1977 Act.

(b) *Construction ban.* The amended Act repeals the provisions found in section 110(a)(2)(I) of the 1977 Act requiring EPA to impose a construction ban in nonattainment areas that failed to submit plans meeting all of the requirements of part D of the Act. The amended Act also contains a savings clause in section 110(n)(3) that preserves certain existing construction bans. Construction bans remain in place only where imposed by virtue of a finding that the plan for the area did not contain an adequate NSR permitting program as required by section 172(b)(6) of the 1977 Act, or the plan failed to provide for timely attainment of the SO_2 NAAQS.

Thus, EPA cannot impose or maintain any previously imposed construction ban that was based on a finding that the plan for the area did not demonstrate timely attainment and maintenance of the ozone or CO NAAQS. The EPA is developing a rule amending its regulations at 40 CFR 52.24 to clarify the limited applicability of the construction ban and appealing the individual sections of 40 CFR part 52 that imposed the construction ban in each ozone or CO nonattainment area where the ban was imposed solely for failure to provide for timely attainment. Since the amended Act no longer authorizes EPA to impose bans on the above basis, EPA interprets the enactment of the Act's amendments as repealing these bans by operation of law as of the date of enactment and treat those amendments to part 52 as mere administrative housekeeping responsibilities. The EPA will treat those areas previously subject to the construction ban under these circumstances as no longer being subject to the ban after the date of enactment.

It should be noted that where construction bans were imposed for failure to demonstrate timely attainment of a standard (other than for SO_2) and also for failure to contain an adequate NSR program, the ban will remain in effect under the savings clause unless and until the State has submitted and EPA has approved such a permitting program. However, where the ban was originally imposed based only upon a finding that the plan did not provide for timely attainment and maintenance, event if the area in fact did not have an approved new source permitting program, the savings clause by its own terms will not preserve the construction ban. Such areas should of course promptly submit adequate permitting programs, but they will not be subject to the section 110(a)(2)(I) ban in the interim.

(c) *NSR.* The 1990 CAAA make numerous changes to the part D NSR permitting requirements for nonattainment areas. The EPA intends to propose rules by April 1992 to implement the NSR related changes mandated by the 1990 CAAA. In the interim period between passage of the 1990 CAAA and adoption of the Agency's regulations, EPA expects that numerous issues regarding the 1990 CAAA will arise. A March 11, 1991 EPA memorandum signed by John S. Seitz, Director of the Office of Air Quality Planning and Standards, sets forth EPA's position on the most important of these transitional issues involving the part D NSR program. Additional transitional guidance will be provided as needed.

8. General Savings Clause.

New Act section 193 sets forth a "General Savings Clause" governing retention of certain types of previously enacted or mandated requirements. Under section 193, any regulation, standard, rule, notice, order and guidance issued prior to November 15, 1990, shall remain in effect unless it is inconsistent with any provision of the 1990 CAAA or is revised by the Administrator. No control requirement in effect, or required to be adopted by an order, settlement agreement, or plan in effect prior to November 15, 1990, in any nonattainment area for any air pollutant, may be modified after enactment in any way unless the modification will result in equivalent or greater emissions reductions of that pollutant.

IV. EPA Requirements

A. SIP Processing Requirements

1. Completeness

Section 110(k)(1) required EPA to promulgate by August 15, 1991 (within 9 months of enactment), minimum criteria that any SIP submittal must meet. The EPA proposed an initial set of completeness criteria at 56 FR 23828 (May 24, 1991) and finalized them at 56 FR 42216 (August 26, 1991). Those notices describe the procedures for assessing whether a SIP submittal is complete and, therefore, adequate to trigger the Act requirement that EPA review and take action on the submittal. The completeness criteria provide a procedure and criteria that enable States to prepare adequate SIP submittals and enable EPA reviewers to promptly screen SIP submittals, identify those that are incomplete, and return them to the State for corrective action without having to go through rulemaking.

The criteria for determining whether a submittal by the State is complete have been separated into two categories: administrative information and technical support information. Administrative information includes the documentation necessary to demonstrate that the State has adhered to basic administrative procedures during the rule adoption process. Technical support information includes the documentation that adequately identifies all of the required technical components of the plan submissions.

When a submittal is determined to be complete, EPA will inform the State by letter of its determination. The EPA will then begin the formal review for approvability. If a submittal is determined to be incomplete, it will be returned to the State with a letter listing the deficiencies. Consistent with section 110(k)(1)(B), EPA will attempt to make completeness determinations within 60 days of receiving a submittal. However, a submittal will be deemed complete if a completeness determination is not made by EPA within 6 months of EPA's receipt of the submittal.

2. Partial Approvals

(a) *Full, partial, and limited approval and disapproval.* The EPA has authority to fully approve or disapprove a State SIP submittal under section 110(k)(3). However, in some instances a State's submission of a SIP or SIP revision will

include a provision that does not comply with one or more applicable requirements of the Act. The Agency must disapprove those portions of a SIP submittal that do not meet the applicable requirements of the Act (section 110(k)(3)). Where the disapproved portions of a SIP submittal are separable (i.e., disapproval of a provision will not affect the stringency of other portions of the SIP), EPA will partially approve the SIP and disapprove those separate parts. However, there may be instances where inseparable portions of the SIP submittal are disapproved. The EPA has interpreted the Act to provide flexibility in the instance where a submittal as a whole serves to improve air quality by providing progress toward attainment, RFP, and/or RACT, yet fails to comply with all of the Act's requirements. Such an action, called a limited approval, is not considered a complete action on the SIP submittal. To complete the action, EPA must also issue a limited disapproval whereby the Agency disapproves the SIP revision request as a whole for failing to meet one or more requirements of the Act.

(b) *Conditional approval.* Under section 110(k)(4), the Administrator may approve a plan revision based on a commitment of the State to adopt specific enforceable measures by a specified date but not later than 1 year after the date of EPA approval of the plan revision that incorporated that commitment. If EPA finds that the State fails to meet the commitment within that year, the conditional approval would automatically convert into a disapproval. The time periods culminating in imposition of sanctions and/or FIP's do not begin to run until the conditional approval is converted to a disapproval.

B. Sanctions and Other Safeguards

1. Background Under 1977 CAAA

The 1977 CAAA provided for two types of sanctions: Construction bans (i.e., a ban on construction or modification of major sources under section 110(a)(2)(I), of a ban on permitting such sources under section 173(4)) and various forms of funding restrictions. The construction bans automatically applied when EPA disapproved a SIP for failure to meet Act requirements as specified under section 110(a)(2)(I); the permitting ban applies when EPA found that a State failed to implement a SIP provision as specified under section 173(4). In addition, EPA had discretionary authority under section 113(a)(5) to impose a construction ban upon finding that a State was not acting in compliance with NSR permitting requirements in nonattainment areas. The EPA also had authority to apply the restrictions on air grants or highway funding under section 176 (a) and (b), or sewage treatment works funding under section 316(b).

2. Available Measures Under 1990 CAAA

The 1990 CAAA revised the law concerning sanctions and related measures. It sets forth specific criteria in section 179(a) to determine when EPA may apply two types of sanctions specified under section 179(b): Highway funding restrictions, and increased emissions offset ratios for new and modified sources. A third type of sanction, restrictions on air grant funding, is provided for under section 179(a). The construction ban provisions of section 110(a)(2)(I) were largely repealed (see section III.G.1.). However, several other provisions of the Act provide for construction bans and other sanctions to safeguard against increases in air pollution due to SIP planning or implementation failures.

Section 179(a) sets forth the four types of findings, disapprovals, or determinations (hereafter referred to as "findings") which may lead to the imposition of a sanction: That a State has failed to submit a SIP or an element of a SIP, or that the SIP or SIP element submitted fails to meet the completeness criteria for section 110(k); that EPA disapproves a SIP submission for a nonattainment area based on its failure to meet one or more plan elements required by the Act; that the State has not made any other submission required by the Act that meets the completeness criteria or had made a required submission that is disapproved by EPA for not meeting the Act's requirements; or that a requirement of an approved plan is not being implemented.

(a) *Highway funding sanction.* Consistent with the procedures and findings described below, the EPA may (and in some cases must) prohibit approval by the Secretary of Transportation of projects or grants (pursuant to title 23 of the U.S.C.) in the affected nonattainment area except where the Secretary has determined that the purpose of the project or grant is to improve a demonstrated safety problem. In addition, the Act provides exemptions for certain projects and grants that are intended to minimize air pollution problems (section 179(b)(1)).

(b) *Emission offset sanction.* The emission offset sanction provision (section 179(b)(2)) refers to the application of the emission offset requirements of section 173. This sanction applies to new or modified sources or emission units for which a permit is required under part D of the amended Act. Under this sanction, the ratio of emissions reductions that must be obtained to offset increased emissions (caused by the new or modified source) in the sanctioned area must be at least 2 to 1. The ozone pre-sanction ratio ranges between 1 to 1.5, depending upon the classification of the area. The EPA plans to promulgate Federal nonattainment rules at 40 CFR 52.10, which could be used to apply this sanction.

(c) *Grant funding sanction.* According to section 179(a), the Administrator may withhold all or part of the grants that support air pollution planning and control programs that the Administrator may award under section 105.

(d) *Section 173(a)(4) permitting ban.* Section 173 of the amended Act contains the requirements that must be met to issue a NSR construction permit for a new or modified major source in a nonattainment area. A prerequisite contained in section 173(a)(4) for issuing such permits is that the permit authority must find that the Administrator has not determined that the applicable implementation plan is not being adequately implemented as required part D. This means that issuing construction permits for major stationary sources under section 173 is prohibited if the Administrator determines that the approved SIP for complying with the part D nonattainment requirements is not being adequately implemented for the nonattainment area in which the new source wants to locate or in which the source wishing to modify its facility is located.

(e) *Section 113(a)(5) construction prohibition.* Section 113(a)(5) authorizes EPA to prohibit the construction or modification of specific major stationary sources in all areas, including attainment areas, and to take other enforcement actions against individual sources whenever the Administrator finds that a State is not acting in compliance with any requirement or prohibition of the Act related to constructing new sources or modifying existing sources. The authority in section 113(a)(5) may also be used to issue general construction bans. After making a finding under section 113(a)(5), the Administrator may issue an order prohibiting the construction or modification of any major stationary source in any area to which such requirement applies, issue an administrative penalty order in

accordance with the requirements of section 113(d), or bring a civil action under section 113(b). Nothing in section 113(a)(5) shall preclude the United States from commencing, at any time, a criminal action under section 113(c) for any such violation.

(f) *Other sanction provisions.* Section 110(m) includes provisions on sanctions. The EPA will be discussing those provisions in a subsequent Federal Register notice.

3. Application and Timing of the Section 179 Sanctions

Eighteen months after the Administrator makes a finding concerning a State failure (as described below) with respect to a specific plan required by part D or in response to a SIP call, under section 179(a), the Administrator must apply either the highway or offset sanctions of section 179(b) unless the inadequacy has been corrected to EPA's satisfaction. The sanction applied will be chosen on a case-by-case basis depending on the circumstances involved. The EPA must apply both sanctions after 18 months if the Administrator finds a lack of good faith on the part of the State, or after 24 months if the deficiency is not corrected (within 6 months after the first sanction is imposed).

C. Federal Implementation Plans (FIP's)

The Administrator is required to promulgate a FIP within 2 years of finding that a State has failed to make a required submittal or that a received submittal does not satisfy the minimum completeness criteria established under section 110(k)(1)(A) (see 56 FR 42216, August 26, 1991), or disapproving a SIP submittal in whole or in part. Section 110(c)(1) mandates EPA promulgation of a FIP if the Administrator has not yet approved a correction proposed by the State before the time a final FIP is required to be promulgated. Within the Act's general provisions, a FIP is defined explicitly to allow for the inclusion of "economic incentives, such as marketable permits or auctions of emissions allowances" (section 302(y)). The EPA views the use of economic incentives in the context of a FIP as potentially appropriate, especially in cases of failure of ozone nonattainment areas to meet the RFP requirements. Such incentives may focus particularly on permitted sources. In developing FIP strategies that include economic incentives, EPA will look to its economic incentive program rules (section 182(g)(4)) due to be published November 15, 1992, as guidance in developing those elements of the FIP. Economic incentive programs are discussed in more detail in section III.G.3.

There may be areas where EPA has to promulgate Federal NSR regulations. The EPA intends to adopt at 40 CFR 52.10 Federal nonattainment area permitting rules that EPA can impose in States with deficient nonattainment NSR permit programs.

V. Miscellaneous

A. Relationship of Title I to Title V

1. Introduction

The purpose of this section is to discuss the issues originally described in the title V rulemaking preamble (56 FR 21712—May 10, 1991). The three main issues discussed here are how a combination of SIP's and permits can do the job that SIP's now do by themselves, the extent to which EPA will develop RACT protocols or procedures, and how EPA will approach marketable permits and trading of allowances in ozone nonattainment areas.

The approach taken here begins with the purposes of a SIP, which are to make demonstrations (of how attainment, maintenance, and progress will be achieved), and to provide a control strategy that will achieve the necessary reductions and otherwise meet the requirements of the Act.

The key questions are what fundamental principles apply to SIP's, and what features must SIP's and permits have to implement SIP control strategies and to satisfy these principles? The fundamental SIP principles will be used as guiding criteria for judging success in resolving the issues described above.

For a number of reasons explained below, certain elements must be contained in a SIP so that it will satisfy the identified principles and meet the Act's requirements. Other elements could be contained in permits, and still other elements may be shared and/or implemented in part by SIP's and in part by permits.

Following the discussion of fundamental SIP principles and associated SIP and permit features, this section proposes ways to answer the questions raised in the title V proposal.

2. Purposes of a SIP

One purpose of a SIP is to perform demonstrations of how various goals will be achieved. These goals are of three types: Attainment of the NAAQS, maintenance of the NAAQS once attainment occurs, and prescribed rates of progress. To satisfy these purposes, a number of assumptions must be made in the SIP regarding baseline emissions and future growth in various sectors of the economy. For these assumptions, SIP planners often rely on projections of population, motor vehicle travel or economic indicators made by other government agencies, and projections made by the air pollution control agency regarding the future effect of planned pollution control measures.

These assumptions, control strategies, and measures are developed as necessary to meet the attainment objectives for the area and the Act's requirements (e.g., RACT). These assumptions and measures are key components of the SIP. It is important to note that projections of the effect of planned air pollution control measures contained in the SIP's are not merely assumed but are enforced by regulations adopted as part of the SIP. Therefore, if the control measures are not implemented sufficiently to result in required reductions, the State or local agency, or EPA, can take action to enforce implementation of the regulations. This provides a means of achieving, at least in part, the goals of attainment and further progress required in the Act.

For purposes of illustrating the principles and elements of SIP's that apply to sources, the discussion below concentrates more on elements relevant to implementing the control strategies part of a SIP, rather than on those relevant to the demonstration. This simplifies the discussion and reflects the fact that the purpose of the permit is to implement measures, not perform demonstrations, which is unquestionably a purpose of the SIP.

3. Fundamental Principles for SIP's/Control Strategy

To develop an effective SIP control strategy and to achieve the desired result, the SIP and any implementing instruments, including permits, should adhere to certain principles. These principles help provide assurance that the planned emissions reductions will be achieved. These principles are discussed in EPA's policy on emissions trading contained in 51 FR 43814 (December 4, 1986).

(a) *First principle.* The first principle is that the baseline emissions from the source and the control measures be quantifiable (i.e., a specific amount of emissions reductions can be ascribed to the measures). Baseline emissions must be represented accurately in the SIP in order for the benefits of the measure to be properly quantified. Furthermore, the emissions must be representative of the time period of the inventory. Likewise, the effect of the measure must be identified in order to assess the

contribution to the necessary emissions reductions. The value for a measure's effect can be used as a limit in a regulation, or it may be used alone or in combination with assumptions regarding operating hours or production, or as part of the projections in the demonstrations.

(b) *Second principle.* The second principle is that the measures be enforceable. Measures are enforceable when they are duly adopted, and specify clear, unambiguous, and measurable requirements. A legal means for ensuring that sources are in compliance with the control measure must also exist in order for a measure to be enforceable. This principle is well grounded in the Act. New section 110(a)(2) of the Act requires that SIP's include "enforceable emission limitations and other control measures" and "a program to provide for the enforcement of the measures" in the plan. Court decisions made clear that regulations must be enforceable in practice. A regulatory limit is not enforceable if, for example, it is impractical to determine compliance with the published limit.

(c) *Third principle.* The third principle is that the measures be replicable. This means that where a rule contains procedures for changing the rule, interpreting the rule, or determining compliance with the rule, the procedures are sufficiently specific and nonsubjective so that two independent entities applying the procedures would obtain the same result.

(d) *Fourth principle.* The fourth principle is that the control strategy be accountable. This means, for example, that source-specific limits should be permanent and must reflect the assumptions used in the SIP demonstrations. It also means that the SIP must contain means (such as operating permits issued under title V) to track emission changes at sources and provide for corrective action if emissions reductions are not achieved according to the plan. The Act provides for this tracking and remedial action in its requirements for meeting milestones and for contingency measures in SIP's. The EPA will use this principle to explore options for tracking emissions resulting from issuing permits or permit amendments.

The principles of quantification, enforceability, replicability, and accountability apply to all SIP's and control strategies, including those involving emissions trading, marketable permits and allowances. The EPA's emissions trading policy provides that only trades producing reductions that are surplus, enforceable, permanent, and quantifiable can get credit and be banked or used in an emissions trade.

4. Approaches To Ensure That Permits Properly Support SIP's.

The EPA has considered various ways that permits and SIP's can be configured to complement each other and still meet the principles discussed above. The following discussion covers some approaches.

The SIP remains the basis for demonstrating and ensuring attainment and maintenance of the national ambient air quality standards (NAAQS). The permit program collects and implements the requirements contained in the SIP as applicable to the particular permittee. Since permit must incorporate emission limitations and other requirements of the SIP, all SIP provisions applicable to a particular source will be defined and collected into a single document. The applicable requirements in the permit would include any recent SIP changes, whether as a result of a State or local SIP revision or of a FIP action by EPA. The EPA intends to assist in the implementation of the permit program through the use of model permits for numerous source categories.

As previously discussed, title V affords significant operational flexibility. The relationship between title V permits and SIP's is a key factor in determining the extent to which operational flexibility is available to sources, since each permit, in part, must assure compliance with the applicable implementation plan. The EPA recognizes that it will take time to complete the transition from a regulatory system where SIP's are the primary tool for implementing and enforcing the Act, to one where operating permits ultimately assume primary responsibility for implementation and enforcement.

The EPA is considering what means will aid in ensuring a smooth transition to increasingly general, and thus more flexible, SIP's, which may allow permits rather than the SIP's to specify the details of how SIP limits and objectives apply to subject sources. In particular, EPA will be seeking to develop information in the following areas:

(1) The most efficient ways of implementing requirements of SIP's through permits, such as moving detail from SIP's to permits;

(2) Flexible ways for sources to demonstrate compliance with reasonably available control technology (RACT) limits, such as through the use of protocols for defining equivalency or through the development of equivalency determinations in the permitting process (as discussed below); and

(3) Expanded use of emissions trading and marketable permits to achieve SIP objectives as well as providing a sta accountable mechanism for tracking a enforcing emissions reductions at a source.

EPA will be adopting provisions to facilitate the movement toward more flexible SIP's in its final rules to implement title V. EPA plans to include provisions which specify that no permit revision is required for emission trades through economic incentives or marketable permit programs, provided that the permit contains a means or process for implementing the program. Thus, a SIP containing a generic trading rule and a replicable procedure for implementing the rule through a permit may allow trading to occur without a permit revision, provided the permit contains the replicable procedure. This is similar to the way in which permits allow sources to shift among alternate scenarios that were initially provided for in the permit. It States choose to implement trading in this matter, the provisions of the permit allowing the trades must incorporate all of the procedural protections contained in the underlying SIP.

States may also elect to develop SIP's that set forth trading and compliance provisions that sources could use to comply with SIP limits. The SIP would have to include compliance requirements and procedures for the trade which are sufficiently specific to demonstrate compliance. Such provisions can prove useful to sources in cases where permits do not already provide for emission trades.

(a) *Increasing flexibility in SIP's through permits.* In addition, a State may choose to adopt a SIP provision that would authorize sources to meet either the SIP limit or an equivalent limit to be formulated in the permit system. The permit must contain the equivalency determination, as well as provisions that assure that the resulting emission limit is quantifiable, accountable, enforceable, and, based upon replicable procedures, is equivalent to the SIP limit. Consistent with these requirements, States may do so for all appropriate SIP requirements or only for specific requirements for which the State determines equivalency determinations are appropriate. The determination of what constitutes an equivalent limit could take place either during the permit issuance, or renewal process, or as a result of the significa permit modification procedures. The State retains discretion, subject to EPA veto, to decide if an alternative emission limit is justified in any particular case.

(b) *Developing more RACT protocols.* In the title V preamble, the EPA said that it would develop more flexible ways for sources to demonstrate compliance with RACT limits. One way is to use protocols defining equivalent means of compliance. For example, in 1980 EPA released the "Can Coating Policy," which allows cross-line averaging for can coating facilities and provides the calculation technique for doing so.

The EPA is undertaking a study to determine the extent to which multi-day and cross-line averaging can be used to provide specific industries more flexibility in meeting their VOC RACT requirements. This project is focusing on the graphic arts and aerospace industries. For this study, EPA is taking the following steps:

(i) Survey the can coating industry to determine how the protocol has been functioning and to collect data on daily and monthly emissions, coating usage and VOC content. These data will be used to determine whether there is a good and stable correlation between daily and monthly emissions rates and between cross-line and line-by-line emissions.

(ii) Survey aerospace and graphic arts sources to collect emissions data, coating usage and VOC content on a daily basis. These data also will be analyzed to determine the variability of emissions from day to day and line to line.

(iii) Based on the above information, EPA will determine the appropriateness of developing procedures for time-averaging and line-by-line compliance for the graphic arts and aerospace industries and issue these procedures as appropriate.

When EPA completes this process, it will then assess whether it is feasible and desirable to develop procedures for other source categories for which such procedures may be appropriate.

(c) *Exploring marketable permits/ allowance trading.* The EPA fully expects that the use of emissions trading and economic incentives such as marketable permits or allowance trading will increase as the Act is implemented. In addition, EPA is committed to exploring ways to reduce the cost or burden to industry through the use of innovative measures that use the marketplace to reduce costs. And, as mentioned in its title V preamble, the EPA wants to find ways to achieve the goals of the Act without requiring time-consuming SIP revisions for every change at a source.

One way to minimize SIP revisions is through the use of replicable SIP procedures that are implemented by the permit. As long as the terms of the permit complied with the SIP rule, changes to the permit could be made without a SIP revision. The proposed title V regulation, for example, would not require a permit change for emission trades authorized under the Act if such changes were implemented consistently with the replicable procedure specified in the SIP.

The EPA believes that the same principles discussed previously also should apply to measures such as marketable permits, emission trades and allowances. In addition, the principles of surplus and consistency with the SIP should also apply to any trading program. For example, replicability must always be honored to assure that consistent and predictable benefits are derived from a marketable permits program. Also, the principle that baseline emissions and measures should be quantifiable is particularly important when applied to the level of emission trading that might occur in a large ozone nonattainment area.

The EPA does not believe that it has enough information at this time to fully resolve all of the practical questions mentioned above or in the title V preamble regarding marketable permits, trading, and allowances. The EPA believes that, in resolving such questions, it should apply the same principles mentioned above, namely, that such measures should be quantifiable, accountable, enforceable and implemented according to replicable procedures.

B. Tribal Implementation Plans

Section 107 of the 1990 CAAA adds several provisions to the statute that create the first express authority for EPA to treat Indian tribes as States for certain Act purposes. Section 107 also allows a tribe that qualifies for treatment as a State to develop and submit to EPA a tribal implementation plan (TIP) for implementation of the NAAQS on tribal lands (see Act sections 110(o) and 301(d)). Under section 301(d)(2), EPA is required to promulgate regulations by May 15, 1992 for treating of tribes as States. Section 301(d)(3) states that EPA may promulgate regulations setting forth the elements of TIP's and procedures for EPA action on them. In addition, section 301(d)(4) states that where EPA determines that treatment of Indian tribes as identical to States is not appropriate, the Agency may by regulation provide other means by which EPA will directly administer these provisions. In the preambles to the proposed and final rules, EPA will discuss other issues relating to implementation of the Act on tribal lands.

C. Section 179B Requirements

A new section 179B, International Border Areas, was added to the statute. This section applies to nonattainment areas that are affected by emissions emanating from outside the United States. This section requires EPA to approve a SIP if: The SIP or SIP revision meets all of the requirements applicable to it under the Act, other than a requirement that it demonstrate attainment and maintenance of the relevant NAAQS by the applicable attainment date; and the affected State establishes to EPA's satisfaction, that the SIP or revision would be adequate to attain and maintain the relevant NAAQS by the applicable attainment date but for emissions emanating from outside the United States. Further, any State that establishes to the satisfaction of EPA—with respect to an ozone, CO, or PM-10 nonattainment area in such a State—that the State would have attained the relevant NAAQS but for emissions emanating from outside the United States, shall not be subject to the following provisions: extension of the ozone attainment dates pursuant to section 181(a)(5), the fee provisions of section 185, and the bump-up provisions for failure to attain for ozone (section 181(b)(2),[41] CO (section 186(b)(2), and/or PM-10 (section 188(b)(2) NAAQS.[42]

---

[41] Note that the statute contained an erroneous reference to section 181(a)(2) instead of 181(b)(2).

[42] As noted, section 179B(d) states that PM-10 areas demonstrating attainment of the standards but for emissions emanating from outside the United States shall not be subject to section 188(b)(2) (reclassification for failure to attain). By analogy to this provision and applying canons of statutory construction, EPA will not reclassify before the applicable attainment date areas which can demonstrate attainment of the PM-10 standards but for emissions emanating from outside the United States. See section 188(b)(1). First, EPA believes section 179(B)(d) evinces a general congressional intent not to penalize areas where emissions emanating from outside the country are the but for cause of the PM-10 attainment problems. Further, if EPA were to reclassify such areas before the applicable attainment date, EPA, in effect, would be reading section 179(B)(d) out of the statute. Specifically, if EPA proceeded to reclassify before the applicable attainment date those areas qualifying for treatment under section 179(B), an area would never be subject to the provision in section 179(B)(d) which prohibits EPA from reclassifying such areas after the applicable attainment date. Canons of statutory construction counsel against interpreting the law such that language is rendered mere surplusage. Finally, note that section 179(B)(d) contains a clearly erroneous reference to carbon monoxide instead of PM-10 and that this section contains other errors. See, e.g., section 179(B)(c) reference to section 186(b)(9), which does not exist.

In demonstrating that an area could attain the relevant NAAQS but for emissions emanating from outside the United States, approved EPA modeling techniques should be used whenever possible. An emission inventory incorporating vehicle emissions occurring in the United States generated from vehicles registered in the adjacent foreign country must be completed by the State before modeling in the United States' side only and attempting to demonstrate attainment. The EPA recognizes that adequate data may not be available in areas outside the United States. Therefore, modeling (consistent with EPA's "Guidance on Air Quality Models, Revised") may not be possible in all cases. Because very few areas are likely to be affected by this provision, EPA will determine on a case-by-case basis whether the State has satisfactorily made the required demonstration. The State is encouraged to consult with the EPA Regional Office in developing any alternate demonstration methods. Methods that the State may want to consider include: using ozone episodes that do not involve international transport of emissions for modeling (see guidance document entitled "Criteria for Assessing Role of Transported Ozone/Precursors in Ozone Nonattainment Areas"), running the model with boundary conditions that reflect general background concentrations on the U.S. side, analyzing monitoring data if a dense network has been established, and using receptor modeling for PM–10. States should confer with the appropriate EPA Regional Office to establish appropriate technical requirements for these analyses.

VI. Other Requirements

A. Executive Order 12291

Under Executive Order 12291, EPA is required to judge whether an action is "major" and, therefore, subject to the requirement of a regulatory impact analysis. The Agency has determined that this action is exempt from classification as "major" because it is a compilation of interpretive rule and general statements of policy as defined in the Adminstrative Procedures Act (APA). Nevertheless, this notice was submitted to the Office of Management and Budget (OMB) for review.

A copy of the draft notice as submitted to OMB, any documents accompanying the draft, any written comments received from other agencies (including OMB), and any written responses to these comments have been included in the Docket.

B. Regulatory Flexibility Act

Whenever the Agency is required by section 553 of the APA or any other law to publish general notice and proposed rulemaking for any proposed rule, the Agency shall propose and make available for public comment an intial regulatory flexibility analysis.

The regulatory flexibility requirements do not apply for the General Preamble because it is not a regulatory action in the context of the APA or the Regulatory Flexibility Act.

Note: Appendices A through E will be published in a subsequent Federal Register.

Dated: March 27, 1992.

William K. Reilly,

Administrator.

[FR Doc. 92–7954 Filed 4–15–92; 8:45 am]

BILLING CODE 6560–50–M

federal register

Tuesday
April 28, 1992

Part VII

Environmental Protection Agency

40 CFR Part 52

State Implementation Plans; General Preamble for the Implementation of Title I of the Clean Air Act Amendments of 1990; Supplemental; Proposed Rule

ENVIRONMENTAL PROTECTION AGENCY

40 CFR Part 52

[FRL-4127-1]

State Implementation Plans; General Preamble for the Implementation of Title I of the Clean Air Act Amendments of 1990; Supplemental

AGENCY: Environmental Protection Agency (EPA).

ACTION: General Preamble for future proposed rulemakings; Appendices.

SUMMARY: The EPA published a General Preamble for the Implementation of title I of the Clean Air Act Amendments of 1990 on April 16, 1992 (57 FR 13498). This document describes EPA's preliminary views on how EPA should interpret various provisions of title I of the Clean Air Act Amendments of 1990, primarily those concerning State implementation plan (SIP) revisions required for nonattainment areas. It serves as advance notice of how EPA generally intends, in subsequent rulemakings, to take action on SIP submissions.

The appendices to the General Preamble were inadvertently omitted. The appendices contain important support materials that are referenced throughout the General Preamble. Therefore, this notice, containing the aforementioned appendices, serves as a supplement to the General Preamble and should be considered as such.

FOR FURTHER INFORMATION CONTACT: Mr. Brock Nicholson, Chief, Policy Development Section, Ozone/CO Programs Branch (MD-15) at (919) 541-5517, for issues related to ozone or carbon monoxide; Mr. Eric Ginsburg at (919) 541-0877, Sulfur Dioxide/Particulate Matter Programs Branch (MD-15), for issues related to sulfur dioxide, particulate matter, or lead; Mr. Gary McCutchen at (919) 541-5592, Permits Programs Branch (MD-15), for issues related to new source review, U.S. Environmental Protection Agency, Research Triangle Park, North Carolina 27711; Ms. Paula Van Lare at (202) 260-3450 for issues related to mobile sources, 401 M Street, SW, Washington, DC 20460.

ADDRESSES: The appendices are also in Air Docket A-91-35, at 401 M Street, SW, Washington, DC.

Dated: April 21, 1992.

Michael Shapiro,

Acting Assistant Administrator for Air and Radiation.

Appendix A—Glossary

ACT = alternative control technique
AVO = average vehicle occupancy
BACM = best available control measures
BACT = best available control technology
CAA = Clean Air Act
CAAA = Clean Air Act Amendments
CARB = California Air Resources Board
CEMS = continuous emission monitoring system
CO = carbon monoxide
CPM = condensible particulate matter
CTG = control technique guideline
DOI = Department of the Interior
DOT = Department of Transportation
EKMA = Empirical Kinetic Modeling Approach
ERC = emission reduction credits
ETC = employer transportation coordinator
ETPS = Emission Trading Policy Statement
FIP = Federal Implementation Plan
FMVCP = Federal Motor Vehicle Control Program
FR = Federal Register
GVWR = Gross Vehicle Weight Rating
HC = hydrocarbons
I/M = inspection and maintenance
IPP = inventory preparation plan
LAER = lowest achievable emission rate
MMS = Minerals Management Service
MSA/CMSA = metropolitan statistical area/consolidated metropolitan statistical area
NAAQS = national ambient air quality standards
NAS = National Academy of Sciences
NO_2 = Nitrogen dioxide
NO_x = nitrogen oxides
NSPS = new source performance standard
NSR = New Source Review
OCS = outer continental shelf
PSD = prevention of significant deterioration
psi = pounds per square inch
RACM = reasonably available control measures
RACT = reasonably available control technology
RFP = reasonable further progress
RTA = rural transport area
RVP = Reid vapor pressure
SCAQMD = South Coast Air Quality Management District
SO_2 = sulfur dioxide
SIP = State implementation plan
TCM = transportation control measures
TSP = total suspended particulate (matter)
VOC = volatile organic compound
VMT = vehicle miles traveled

Appendix B—Bibliography and Cited References

To obtain copies of OAQPS documents, contact the EPA Library, (919) 541-5514; (FTS) 629-5514. For OMS publications, please contact Mark Wolcott, (313) 668-4219; (FTS) 374-8219.

SIP Inventory Guidance/Requirements

"Procedures for Preparing Emissions Projections," EPA-450/4-91-019, U.S. Environmental Protection Agency, Office of Air Quality Planning and Standards, Research Triangle Park, NC, July 1991.

"Procedures for Emission Inventory Preparation, Volume IV: Mobile Sources," EPA-450/4-81-026d, U.S. Environmental Protection Agency, Office of Mobile Sources, Ann Arbor, MI, July 1991. (also listed below under General Inventory Guidance).

"Procedures for the Preparation of Emissions Inventories for Carbon Monoxide and Precursors of Ozone, Volume I", EPA-450/4-91-016, U.S. Environmental Protection Agency, Office of Air Quality Planning and Standards, Research Triangle Park, NC, May 1991.

"Procedures for the Preparation of Emissions Inventories for Carbon Monoxide and Precursors of Ozone, Volume II: Emission Inventory Requirements for Photochemical Air Quality Simulation Models," EPA-450/4-91-014, U.S. Environmental Protection Agency, Office of Air Quality Planning and Standards, Research Triangle Park, NC, May 1991.

"Emission Inventory Requirements for Ozone State Implementation Plans," EPA-450/4-91-010, U.S. Environmental Protection Agency, Office of Air Quality Planning and Standards, Research Triangle Park, NC, March 1991.

"Emission Inventory Requirements for Carbon Monoxide State Implementation Plans," EPA-450/4-91-011, U.S. Environmental Protection Agency, Office of Air Quality Planning and Standards, Research Triangle Park, NC, March 1991.

"SIP Air Pollutant Inventory Management System (SAMS) Version 4.0 and SAMS User's Manual," U.S. Environmental Protection Agency, Office of Air Quality Planning and Standards, Research Triangle Park, North Carolina, March 1991.

"Example Emission Inventory Documentation for Post-1987 Ozone State Implementation Plans (SIPs)," EPA-450/4-[illegible]018, U.S. Environmental Protection Agency, Office of Air Quality Planning and Standards, Research Triangle Park, NC, October 1989.

"Procedures for Estimating and Applying Rule Effectiveness in Post-1987 Base Year Emission Inventories for Ozone and Carbon Monoxide State Implementation Plans," U.S. Environmental Protection Agency, Office of Air Quality Planning and Standards, Research Triangle Park, NC, June 1989.

Quality Assurance/Inventory Review Guidance

"Quality Review Guidelines for Post-1987 State Implementation Plan (SIP) Base Year Emission Inventories (Draft)," U.S. Environmental Protection Agency, Office of Air Quality Planning and Standards, Research Triangle Park, NC, February 1990. (Final version to be completed in August 1991.)

"Guidance for the Preparation of Quality Assurance Plans for O_3/CO SIP Emission Inventories," EPA-450/4-88-023, U.S. Environmental Protection Agency, Office of Air Quality Planning and Standards, Research Triangle Park, NC, December 1988.

General Inventory Guidance

"Procedures for Emission Inventory Preparation," U.S. Environmental Protection Agency, Office of Air Quality Planning and Standards, Research Triangle Park, NC:

a. "Volume I: Emission Inventory Fundamentals," EPA-450/4-81-026a, September 1981.

b. "Volume II: Point Sources," EPA-450/4-81-026b, September 1981.

c. "Volume III: Area Sources." EPA–450/4–81–028c. September 1981.
d. "Volume IV: Mobile Sources." EPA–450/4–81–028d (Revised). July 1981.
e. "Volume V: Bibliography." EPA–450/4–81–028e. September 1981.

Emission Factors/Models

"Personal Computer Version of the Biogenic Emissions Inventory System (PC–BEIS) With User's Guide." EPA–450/4–91–017. U.S. Environmental Protection Agency. Office of Air Quality Planning and Standards. Research Triangle Park, NC. July 1991.
"User's Guide to MOBILE4 (Mobile Source Emission Factor Model)." EPA–AA–TEB–89–01. U.S. Environmental Protection Agency. Office of Mobile Sources. Ann Arbor, MI. February 1989. (Revised version of MOBILE4 and documentation to be completed in July 1991.)
"Surface Impoundment Modeling System (SIMS) Version 2.0 User's Manual." EPA–450/4–90–019a. U.S. Environmental Protection Agency. Office of Air Quality Planning and Standards. Research Triangle Park, NC. September 1990.
"Background Document for Surface Impoundment Modeling System (SIMS) Version 2.0. EPA–450/4–90–019b." U.S. Environmental Protection Agency. Office of Air Quality Planning and Standards. Research Triangle Park, NC. September 1990.
"AIRS Facility Subsystem Source Classification Codes (SCCs) and Emission Factor Listing for Criteria Pollutants." U.S. Environmental Protection Agency. Office of Air Quality Planning and Standards. Research Triangle Park, NC. September 1989.
"Compilation of Air Pollutant Emission Factors, Volumes I and II and its supplements. Fourth Edition." AP–42. U.S. Environmental Protection Agency. Office of Air Quality Planning and Standards. Research Triangle Park, NC. September 1985.

Citations and Guidance for SIP Corrections

"Guidance Document for Correction of Part D SIP's for Nonattainment Areas." EPA. Office of Air Quality Planning and Standards. Research Triangle Park, NC. January 27, 1984.

Citations and Guidance for PM–10

"Assessment of the Controllability of Condensible Particulate Matter." EPA–600/8–90–75. October 1990.
"Procedures for Estimating Probability of Nonattainment of a PM–10 NAAQS Using Total Suspended Particulate of PM–10 Data." EPA–450/4–86–017. December 1986.
"PM–10 SIP Development Guideline." June 1987.
"Control of Open Fugitive Dust Sources." EPA–450/3–88–008. September 1988.
"Guidance Document for Residential Wood Combustion Emission Control Measures." EPA–450/2–89–015. September 1989.
"Prescribed Fire Smoke Management Guide." NFES No. 1279. February 1985.
"Prescribed Fire Plan Guide." NFES No. 1939. August 1986.

Citations and Guidance for SO_2

"SO_2 Guideline." EPA–450/2–89–019.
"SO_2 Guideline Appendices." EPA–450/2–89–019. October 1989.
"Letter from William Reilly to Representative John Dingell. In Response to questions and GAO report." April 10, 1991.

Citations and Guidance for Lead

"Updated information on Approval and Promulgation of Lead Implementation Plans." U.S. Environmental Protection Agency. Research Triangle Park, NC. July 1983.
"Guideline Series. Development of an Example Control Strategy for Lead." EPA–450/2–79–002. April 1979.
"Guideline Series. Supplementary Guideline for Lead Implementation Plans." EPA–450/2–78–038. August 1978.

Modeling Guidance

"UAM Applications Guidance." May 1991.
"User's Guide for the Urban Airshed Model. Vol. 4." EPA–450/4–90–007D. June 1990.
"Guidance on Air Quality Models (Revised)." EPA–450/2–78–027R. July 1986.
"Interim Procedures for Evaluating Air Quality Models: Experience with Implementation." EPA 450/4–85–006. July 1985.

New Source Review Guidance

"New Source Review Prevention of Significant Deterioration and Nonattainment Area Guidance Notebook." January 1988.
"Draft Workshop Manual for New Source Review (NSR) Programs." December 1990.

Miscellaneous Guidance

"Criteria for Assessing the Role of Transport of Ozone/Precursors in Ozone Nonattainment Areas." U.S. Environmental Protection Agency. Research Triangle Park, NC. EPA–450/4–91–015).
"Enforcement Guidance for Stage II Vehicle Refueling Control Programs." December 1991.
"Getting Started on Title I." U.S. Environmental Protection Agency. OAQPS. Research Triangle Park, NC., April 1991.
"Issues Relating to VOC Regulations. Cutpoints, Deficiencies, and Deviations." Clarification to Appendix D of November 24, 1987 FR (Blue Book, revised January 11, 1990). U.S. Environmental Protection Agency. Office of Air Quality Planning and Standards. AQMD. May 25, 1988.
"Protocols: Can Coaters. 45FR (December 8, 1988) + Topcoaters." EPA–450/3–83–018 (December 1988).
"Technical Guidance—Stage II Vapor Recovery System for Control of Vehicle Refueling Emissions at Gasoline Dispensing Facilities." Volume 1, November 1991.

Memoranda

Memorandum from William Laxton, Director, Technical Support Division, to Regional Air Division Directors, "Guidance for Determining Significant Stationary Sources of Carbon Monoxide." May 13, 1991.
Memorandum from John Seitz, OAQPS to Air Division Director, Regions I–X, "New Source Review (NSR) Program Transitional Guidance." March 11, 1991.
Memorandum from John Calcagni and William Laxton, "Interim Guidance on Emission Limits and Stack Test Methods for Inclusion in PM–10 SIP's." December 24, 1990.
Memorandum from Robert Bauman and Rich Biondi to Air Branch Chiefs, "SO_2 SIP Deficiency Checklist." November 26, 1990.
Memorandum from Joseph Tikvart and Robert Bauman concerning modeling guidelines addressing PM–10, dated July 15, 1990.
Memorandum from William Laxton, Director, Technical Support Division, to Regional Air Division Directors, "Ozone and Carbon Dioxide Design Value Calculations." June 18, 1990.
Memorandum from Craig J. Potter, "Interim Policy on Stack Height Regulatory Actions." April 22, 1988.
Memorandum from Gerald A. Emison, Director, OAQPS, to Regional Air Division Directors, "Transmittal of Reissued OAQPS CEMS Policy." March 31, 1988.
Memorandum from John Seitz, Director, Stationary Source Compliance Division, to Regional Air Division Directors. "Implementation of Rule Effectiveness Studies." March 31, 1988.
Memorandum from Craig Potter, Thomas Adams, and Francis Blake to Regional Air Division Directors, "Review of State Implementation Plans and Revisions for Enforceability and Legal Sufficiency." September 23, 1987.
Memorandum from Gerald Emison, Director, OAQPS, to David Kee, Director, Air Management Division, Region V, "Need for a Short-Term BACT Analysis for the Proposed William A. Zimmer Power Plant." November 24, 1986.
Memorandum from Richard Rhoads, Director CPDD, to Division Directors, Regions I–X, "Growth Restrictions in Secondary NAAQS Nonattainment Areas." October 28, 1980.
Memorandum from R. Strelow to RA's Region I–X, "Guidance for Determining Acceptability of SIP Regulations in Non-Attainment Areas." December 9, 1976.

Federal Register Citations

44 FR 20372, April 4, 1979.
44 FR 20375, April 4, 1979.
44 FR 53782, September 17, 1979.
44 FR 53769, September 17, 1979.
44 FR 53791, September 17, 1979.
45 FR 52676, August 7, 1980.
46 FR 7182, January 21, 1981.
46 FR 7187, January 22, 1981.
51 FR 43812, December 4, 1986.
51 FR 43814, December 4, 1986.
51 FR 43832, December 4, 1986.
52 FR 29383, August 7, 1987.
52 FR 45044, November 24, 1987.
53 FR 34500, September 7, 1988.
54 FR 612, January 9, 1989.
55 FR 30973, July 30, 1990.
55 FR 41546, October 12, 1990.
55 FR 41547, October 12, 1990.
55 FR 45799, October 31, 1990
56 FR 5480, February 11, 1991.
56 FR 11101, March 15, 1991.
56 FR 16274, April 12, 1991.
56 FR 23826, May 24, 1991.
56 FR 27257, June 13, 1991.
56 FR 27603, June 14, 1991.
56 FR 31151, July 9, 1991.
56 FR 31154, July 19, 1991.
56 FR 37654, August 8, 1991.
56 FR 43593, September 3, 1991.
56 FR 54554, October 22, 1991.
56 FR 56694, November 6, 1991.
56 FR 58656, November 21, 1991.

Code of Federal Regulations Citations

40 CFR 50.8.
40 CFR 50.9 Appendix H.
40 CFR 50.9.
40 CFR Part 51.
40 CFR Part 51 Appendix M
40 CFR Part 51 Appendix S.
40 CFR 51.100(o).
40 CFR 51.110(c)(1).
40 CFR 51.117.
40 CFR 51.165.
40 CFR 51.166.
40 CFR 51.340 (Subpart R).
40 CFR Part 52.
40 CFR 52.10.
40 CFR 52.21.
40 CFR 52.24.
40 CFR Part 55.
40 CFR Part 58.
40 CFR Part 60.
40 CFR Part 60 Subpart Da.
40 CFR Part 81.

Appellate Court Citations

Alabama Power Company v. Castle, 636 F.2d 323, 360-61, 404-05 (D.C. Cir. 1980).
NRDC v. Thomas, 838 F.2d 1224, (D.C. Cir. 1988), Cert. denied, 109 S.Ct. 219 (1988).
Delaney v. EPA, 898 F.2d 687, 136 Cong. Rec. S16971 (October 27, 1990).

House of Representatives Reports

H.R. Rep. No. 490, 101st Congress, 2nd Session, pt. 1 at 204, 239, 242, 257, 258, 267, 268, and 381.

Appendix C1—Available Fugitive Dust Control Measures

Background

The available control measures listed below apply to all fugitive dust sources except those to which only available control technology is applicable (i.e., process fugitive dust associated with stationary sources). Fugitive dust is particulate matter suspended in the air either by mechanical disturbance of the surface material or by wind action blowing across the surface. Mechanical disturbance includes resuspension of particles from vehicles traveling over roadways, parking lots, and other open areas. Wind action includes dust blown off inadequately stabilized open areas. The quantity of fugitive dust emissions is dependent upon several factors such as the size of the source, emission rate, and control efficiency. The Environmental Protection Agency's (EPA) policy is to reduce fugitive dust emissions, with an emphasis on preventing, rather than mitigating, them. For example, past efforts to control emissions from paved roads have usually relied on street cleaning to reduce silt loading. The new approach would put a higher priority on measures to prevent silt from getting on the road surface. Mitigative measures should be reserved for those areas/situations where prevention is not feasible. Technical guidance on fugitive dust control measures is found in *Control of Open Fugitive Dust Sources* (EPA-450/3-88-008 September, 1988).

List of Available Control Measures

1. Pave, vegetate, or chemically stabilize access points where unpaved traffic surfaces adjoin paved roads.
2. Require dust control plans for construction or land clearing projects.
3. Require haul trucks to be covered.
4. Provide for traffic rerouting or rapid clean up of temporary (and not readily preventable) sources of dust on paved roads (water erosion runoff, mud/dirt carryout areas, material spills, skid control sand). Delineate who is responsible for cleanup.
5. Require paving, chemically stabilizing, or otherwise stabilizing permanent unpaved haul roads, and parking or staging areas at commercial, municipal, or industrial facilities.
6. Develop traffic reduction plans for unpaved roads. Use of speed bumps, low speed limits, etc., to encourage use of other (paved) roads.
7. Limit use of recreational vehicles on open land (e.g., confine operations to specific areas, require use permits, outright ban).
8. Require improved material specification for and reduction of usage of skid control sand or salt (e.g., require use of coarse, nonfriable material during snow and ice season).
9. Require curbing and pave or stabilize (chemically or with vegetation) shoulders of paved roads.
10. Pave or chemically stabilize unpaved roads.
11. Pave, vegetate, or chemically stabilize unpaved parking areas.
12. Establish dust control measures for material storage piles.
13. Provide for storm water drainage to prevent water erosion onto paved roads.
14. Require vegetation, chemical stabilization, or other abatement of wind erodible soil, including lands subjected to water mining, abandoned farms, and abandoned construction sites.
15. Rely upon the soil conservation requirements (e.g., conservation plans, conservation reserve) of the Food Security Act to reduce emissions from agricultural operations.

Appendix C2—Available Residential Wood Combustion Control Measures

Background

Wood smoke from residential wood stoves and fireplaces is a significant source of PM-10 pollution in some areas in the western United States that do not attain the PM-10 ambient air quality standards. For example, in some mountain communities, atmospheric inversions can trap wood smoke particulates in valleys and cause PM-10 concentrations to reach levels well in excess of the standards.

The U.S. EPA's new source performance standard (53 FR 5860, February 26, 1988) is a long-term strategy designed to improve the performance of wood burning devices nationwide. The EPA believes that this standard alone, though, may not result in attainment of the PM-10 air quality standards in areas affected by wood smoke. Additional available control measures are listed below. They are intended to (1) reduce emissions from current stoves through inspections, education, and shifting to cleaner stoves or fuel; (2) curtail the use of wood stoves or fireplaces during adverse meteorological conditions; and (3) limit future growth in emissions. Additional guidance on these measures is contained in EPA-450/2-89-015 (September 1989), *Guidance Document for Residential Wood Combustion Emission Control Measures*. Nothing in this document prevents a State implementation plan (SIP) in a moderate PM-10 nonattainment area from containing control measures more stringent than RACM.

List of Available Control Measures

1. Establish an episode curtailment program, including: A curtailment plan; a communication strategy to implement the plan; a surveillance plan (e.g., "windshield" survey, opacity trigger); and enforcement provisions including procedures, penalties, and exemptions). A voluntary program will be deemed reasonable if the area demonstrates attainment.
2. Establish a public information program to inform and educate citizens about stove sizing, installation, proper operation and maintenance, general health risks of wood smoke, new technology stoves, and alternatives to wood heating.
3. Encourage improved performance of woodburning devices by:
—Establishing a program to identify, through opacity observation, deficiencies in stove operation and maintenance. (Under such a program, advice and assistance should be provided to the identified households to help reduce visible emissions from their devices.)
—Providing voluntary dryness certification programs for dealers and/or making free or inexpensive wood moisture checks available to burners.
—Evaluating and encouraging, as appropriate, the accelerated changeover of existing devices to new source performance standard or other clean burning new or existing technology stoves (e.g., hybrid designs, pellet stoves) by such approaches as subsidized stove purchases tax credits, or other incentives.
4. Provide inducements that would lead to reductions in the stove and fireplace population (or use) by:
—Slowing the growth of woodburning devices in new housing units by taxes, installation permit fees, or other disincentives.
—Encouraging a reduction in the number of woodburning devices (i.e., removing or disabling the devices) through tax credits or other incentives.
—Discouraging the resale of used stoves through taxes, fees, or other disincentives.
—Discouraging the availability of free (or very inexpensive) firewood by increasing cutting fees or limiting the cutting season.

Appendix C3—Prescribed Burning Control Measures

Background

Prescribed burning, including silvicultural and agricultural burning, is a contributor to PM-10 nonattainment in some regions. In many cases, well-established smoke management approaches are not being followed, resulting in avoidable air quality problems. The EPA has been working closely with the National Wildfire Coordinating Group (NWCG) to develop appropriate

guidance. The objective is to establish smoke management (SM) programs in these areas which constitute reasonably available control measures (RACM), and reduce population exposure to smoke from prescribed burning, while assuring that resource management goals are met.

States should address emissions from prescribed burning in a manner that balances natural resource, agricultural, and other burning objectives with air quality goals and objectives, by utilizing a smoke management program as described in the NWCG's Prescribed Fire Smoke Management Guide (NFES No. 1279, February 1985) and the Prescribed Fire Plan Guide (NFES No. 1939, August 1986), publications of the Boise (Idaho) Interagency Fire Center.

The scope of a SM program should reflect the specific conditions and requirements of a local area. Existing programs may be adequate in many cases and in other cases may provide a basis for developing a refined program. Smoke management should encourage the cooperative efforts of local, State, Federal, and private land managers. Emphasis should be on conducting burns under an established planning process.

For the purpose of PM–10 SIP development, the term prescribed burning includes all open burning of vegetative matter. This includes both planned ignition and prescribed natural fire. Nothing in a SM program constituting RACM is intended to influence vegetation management or fire suppression practices so as to increase the potential for wildfire to the point that natural resources or public safety are compromised.

The EPA believes it is reasonable that a SM program apply in those moderate PM–10 nonattainment areas where it has been shown, through monitoring, modeling, or other analysis, that prescribed burning can or does contribute to violations of the PM–10 national ambient air quality standards (NAAQS). The SM program should also apply to areas outside of the nonattainment area if it is shown that prescribed burning outside of the nonattainment area can or does contribute to NAAQS violations. The prescribed burning control measures reasonably may be limited only to the season(s) when high ambient PM–10 concentrations occur, if it can be shown that the annual PM–10 NAAQS is not violated. *See* H.R. Rep. No. 490, 101st Cong., 2d Sess. 268–269 (1990).

Source categories (e.g., burning of fencelines, ditch banks, small brush piles, small prescribed natural burns, garden plots) may not be reasonably controlled where their impact is de minimis based on consideration of their collective influence on PM–10 emissions, their duration, season, and proximity to potentially affected populations.

An SM program should consist of at least the following components:

Smoke Dispersion Evaluation

As a minimum, the program should use National Weather Service forecasts or other meteorological analyses to determine when meteorological conditions are favorable or unfavorable for dispersion and transport of smoke (i.e., "burn days," "no burn days").

Burn Planning, Authorization, and Administration

The smoke management program should provide a process (e.g., telephone call-in) for receiving burn requests, evaluating requests and granting approval for burns. Approval of a burn should be based on an evaluation of the airshed's capacity/capability to disperse emissions on allowable burn days so that the cumulative emissions from all burns and other sources in the airshed will not cause or contribute to violations of the PM–10 NAAQS. The approval to burn on a burn day should be equitably divided among all categories of burners requesting approval to burn while accommodating the "incentives" specified elsewhere in this policy.

Requirements for Ensuring Burner Qualifications

Voluntary training in smoke management techniques should be reasonably available for all burners. The program should include incentives for burners who complete the voluntary training (e.g., priority for approval to burn on "burn days").

Public Education and Awareness

Information programs on the nature of and reasons for smoke management should be periodically presented to the public (e.g., public service announcements, newspaper articles).

Surveillance and Enforcement

The SM program should rely on routine PM–10 monitoring, and/or modeling supplemented by periodic visual assessments of the effectiveness of the dispersion evaluation program. The existing PM–10 monitoring network should be evaluated for its ability to provide information on the effectiveness of the SM program as applied to burning conducted in and near the nonattainment area. The network should be modified as appropriate. The program should also provide a process for documenting and following up on public complaints and should provide for and levy fines against burners who violate any of its mandatory requirements.

Emission Inventories and Emission Efforts

States should develop and maintain an emission inventory for prescribed burning and all burns should be categorized as to their purpose. Documentation of the size, date, purpose, and emission reduction measures used should be submitted following each large burn. Emission reduction techniques (e.g., mass ignition, rapid mop-up) should be encouraged and incentives (e.g., priority for approval to burn on "burn days") should be offered for demonstrated emission reduction efforts, including the use of alternatives to burning, provided that such incentives can be utilized without compromising resource management objectives.

State Oversight

The relationship of the State air pollution agency with other State agencies to which management of the SM program may have been delegated will need to be determined on a State-by-State basis. Nevertheless, State rules and regulations should be enacted in such a manner that all provisions of the SM program are enforceable by the State through its State implementation plan. Generally, memorandums of understanding should be utilized to clearly specify working relationships among agencies.

Appendix C4—RACT Determinations for Stationary Sources

Background

Congress has for the second time in amending the Clean Air Act (Act) specifically required that reasonable available control technology (RACT) be applied to existing stationary sources in nonattainment areas. In section 172(b)(3) of the Act, as amended in 1977, Congress specified that nonattainment area plans were to "require, * * *, reasonable further progress * * * including such reduction in emissions from existing sources in the area as may be obtained through the adoption, at a minimum, of reasonably available control technology." Thus, RACT was required in SIP's developed for areas that were designated nonattainment for total suspended particulate matter. Now, in section 172(c)(1) of the Clean Air Act, as amended by the Clean Air Act Amendments of 1990 (Nonattainment Plan Provisions—In General), Congress again requires that nonattainment area plans provide for "* * * such reductions in emissions from existing sources in the (nonattainment) area as may be obtained through the adoption, at a minimum, of reasonably available control technology." Thus, RACT is now required for PM–10 nonattainment area SIP's.

The EPA recommends that the RACT for a particular source continues to be determined on a case-by-case basis considering the technological and economic feasibility of reducing emissions from that source (through process changes or add-on control technology). The following technological and economic parameters should be considered in determining RACT for a particular source.

Technological Feasibility

The technological feasibility of applying an emission reduction method to a particular source should consider the source's process and operating procedures, raw materials, physical plant layout, and any other environmental impacts such as water pollution, waste disposal, and energy requirements. The process, operating procedures, and raw materials used by a source can affect the feasibility of implementing process changes that reduce emissions and the selection of add-on emission control equipment. The operation of and longevity of control equipment can be significantly influenced by the raw materials used and the process to which it is applied. The feasibility of modifying processes or applying control equipment is also influenced by the physical layout of the particular plant. The space available in which to implement such changes may limit the choices and will also affect the costs of control.

Reducing air emissions may not justify adversely affecting other resources by increasing pollution of bodies of water, creating additional solid waste disposal

problems or creating excessive energy demands. (An otherwise available PM–10 control technology may not be reasonable if these other environmental impacts cannot reasonably be mitigated.) For analytic purposes, a State may consider a PM–10 control measure technologically infeasible if, considering the availability (and cost) of mitigative adverse impacts of that control on other pollution media, the control would not, in the State's reasoned judgment, provide a net environmental benefit. In many instances, however, PM–10 control technologies have known energy penalties and adverse effects on other media, but such effects and the cost of their mitigation are also known and have been borne by owners of existing sources in numerous cases. Such well-established adverse effects and their costs are normal and assumed to be reasonable and should not, in most cases, justify nonuse of the PM–10 control technology. The costs of preventing adverse water, solid waste and energy impacts will also influence the economic feasibility of the PM–10 control technology.

Alternative approaches to reducing emissions of particulate matter including PM–10 are discussed in Control Techniques for Particulate Emissions from Stationary Sources—Volume I (EPA–450/3–81–005a) and Volume II (EPA–450/3–81–005b), September 1982. The design, operation and maintenance of general particulate matter control systems such as mechanical collectors, electrostatic precipitators, fabric filters, and wet scrubbers are discussed in Volume I. The collection efficiency of each system is discussed as a function of particle size. Information is also presented regarding energy and environmental considerations and procedures for estimating costs of particulate matter control equipment. The emission characteristics and control technologies applicable to specific source categories are discussed in Volume II. Secondary environmental impacts are also discussed.

Additional sources of information on control technology are background information documents for new source performance standards and Identification, Assessment, and Control of Fugitive Particulate Emissions, EPA–600/8–86–023, August 1986.

In some instances, control technologies more modern or more advanced than those described in the documents referenced may exist. In such cases, the State's RACT analysis for a source should consider such available technology.

Economic Feasibility

Economic feasibility considers the cost of reducing emissions and the difference in costs between the particular source and other similar sources that have implemented emission reduction. As discussed above, EPA presumes that it is reasonable for similar sources to bear similar costs of emission reductions. Economic feasibility rests very little on the ability of a particular source to "afford" to reduce emissions to the level of similar sources. Less efficient sources would be rewarded by having to bear lower emission reduction costs if affordability were given high consideration. Rather, economic feasibility for RACT purposes is largely determined by evidence that other sources in a source category have in fact applied the control technology in question.

The capital costs, annualized costs, and cost effectiveness of an emission reduction technology should be considered in determining its economic feasibility. The OAQPS Control Cost Manual, Fourth Edition, EPA–450/3–90–006, January 1990, describes procedures for determining these costs. The above costs should be determined for all technologically feasible emission reduction options.

States may give substantial weight to cost effectiveness in evaluating the economic feasibility of an emission reduction technology. The cost effectiveness of a technology is its annualized cost ($/year) divided by the amount of PM–10 emission reduction (i.e., tons/year) which yields a cost per amount of emission reduction ($/ton). Cost effectiveness provides a value for each emission reduction option that is comparable with other options and other facilities.

If a company contends that it cannot afford the technology that appears to be RACT for that source or group of sources, the claim should be supported with such information as the impact on:

1. Fixed and variable production costs ($/unit),
2. Product supply and demand elasticity,
3. Product prices (cost absorption vs. cost pass-through),
4. Expected costs incurred by competitors,
5. Company profits, and
6. Employment.

If a company contends that available control technology is not affordable and would lead to closing the facility, the costs of closure should be considered. Closure may incur costs for demolition, relocation, severance pay, etc.

Appendix D

United States Environmental Protection Agency, Office of Air Quality Planning and Standards, Research Triangle Park, North Carolina 27711.

March 11, 1991.

Memorandum

Subject: New Source Review (NSR) Program Transitional Guidance.

From: John S. Seitz, Director, Office of Air Quality Planning and Standards (MD–10).

To: Addressees.

The Clean Air Act Amendments of 1990 (1990 Amendments) make numerous changes to the NSR requirements of the prevention of significant deterioration (PSD) and nonattainment area programs. The 1990 Amendments create new and expanded nonattainment areas, extend PSD coverage to current Class I area boundaries, and mandate a PSD exemption for certain hazardous air pollutants. The Environment Protection Agency (EPA) intends to propose by September of this year a regulatory package that will implement these and other changes to the NSR provisions. Final adoption of these revised regulations is projected for August 1992. In the interim period between passage of the 1990 Amendments and adoption of the Agency's final regulations, EPA expects that numerous issues regarding the 1990 Amendments will arise. This memorandum sets forth the Agency's position on the most important of these transitional issues involving the NSR program.

This guidance document does not supersede existing State regulations or approved State implementation plans. However, in some cases, it calls upon States to implement their NSR programs in a manner consistent with provisions of the 1990 Amendments that are applicable immediately and with the requirements that flow directly from these provisions. Nonetheless, the policies set out in this transition memorandum are intended solely as guidance and do not represent final Agency action. They are not ripe for judicial review for this reason. Moreover, they are not intended, nor can they be relied upon, to create any rights enforceable by any party in litigation with the United States. The EPA officials may decide to follow the guidance provided in this memorandum, or to act at variance with the guidance, based on an analysis of specific circumstances. The Agency also may change this guidance at any time without public notice.

The Regional Offices should send this guidance document to their States. Questions from States and applicants concerning specific issues and cases should be directed to the appropriate EPA Regional Office. If you have any general questions, please contact Mr. Michael Sewell of the New Source Review Section at FTS 629–0873 or (919) 541–0873.

Attachment

Addressees

Director, Air, Pesticides, and Toxics Management Division, Regions I, IV, and VI

Director, Air and Waste Management Division, Region II

Director, Air Management Division, Regions III and IX

Director, Air and Radiation Division, Region V

Director, Air and Toxics Division, Regions VII, VIII, and X

cc:

J. Calcagni
R. Campbell
W. Laxton
E. Lillis
J. Rasnic
L. Wegman
J. Weigold
NSR Contacts

Corrections to Original Document: Two errors in the document as issued on March 11, 1991 have been corrected in this copy. On page 2 on the last line, "CFC 112" is changed to correctly read "CFC 113". On page 3 in item 4, the cite "Section 172(b)" is changed to correctly read "Section 173(b)".

New Source Review (NSR) Transitional Guidance

Toxics and National Emissions Standards Hazardous Air Pollutants (NESHAPS) Issues

1. Section 112 Hazardous Air Pollutants are No Longer Considered Regulated Pollutants

Under Prevention of Significant Deterioration (PSD), but NESHAPS Still Apply.

Under the 1977 Amendments to the Clean Air Act (Act) and regulations issued thereunder, the PSD requirements of the Act apply to all "major" new sources and "major" modifications, i.e., those exceeding certain annual tonnage thresholds (see 40 CFR 52.21(b)(1)(i) and (b)(2)(i)). Typically, new sources and modifications become subject to PSD because they exceed the specified tonnage threshold for a criteria pollutant, i.e., a pollutant for which a national ambient air quality standard (NAAQS) has been established under section 109 of the Act. Once a new source or modification is subject to PSD, the PSD requirements apply to every pollutant subject to regulation under the Act that is emitted in "significant" quantities (or, in the case of a major modification, for which there is a significant net emissions increase) (see 40 CFR 52.21(b)(23) and (i)(2)). Under the 1977 Amendments, best available control technology (BACT) and other PSD requirements apply not only to emissions of criteria pollutants but also to emissions of pollutants regulated under other provisions of the Act, such as section 111 or 112. This regulatory structure was altered by the 1990 Amendments.

Title III of the 1990 Amendments added a new section 112(b)(6) that excludes the hazardous air pollutants listed in section 112(b)(1) of the revised Act (as well as any pollutants that may be added to the list) from the PSD (and other) requirements of Part C. Thus, because they are on the initial Title III hazardous air pollutants list, the following pollutants, which had been regulated under PSD because they were covered by the section 112 NESHAPS or section 111 new source performance standards (NSPS) program, are now exempt from Federal PSD applicability:

- Arsenic
- Asbestos
- Benzene (including benzene from gasoline)
- Beryllium
- Hydrogen sulfide (H_2S)
- Mercury
- Radionuclides (including radon and polonium)
- Vinyl chloride

The Title III exemption applies to final Federal PSD permits (i.e., those issued in final form and for which administrative appeals, if any, under 40 CFR 124.19 have been exhausted) issued on or after the date of enactment of the 1990 Amendments (November 15, 1990). For Federal PSD permit applications now under review by either an EPA Regional Office or a delegated State, PSD permit requirements do not apply to the pollutants exempted by Title III. For Federal PSD permits containing PSD requirements for the pollutants exempted by Title III issued on or after November 15, 1990, the permittee may request a revision (e.g., removal of a BACT limit for benzene) to their PSD permit to reflect the Title III exemption from Federal PSD applicability.

Note that pursuant to section 116 and the preservation clause in section 112(d)(7) of the amended Act, States with an approved PSD program may continue to regulate the Title III hazardous air pollutants now exempted from Federal PSD by section 112(b)(6) if the State PSD regulations provide an independent basis to do so. These State rules would remain in effect unless a State revised them to provide similar exemptions. Additionally, the Title III pollutants continue to be subject to any other applicable State and Federal rules; the exclusion is only for Part C rules.

Finally, section 112(q) retains existing NESHAPS regulations by specifying that any standard under section 112 in effect prior to the date of enactment of the 1990 Amendments shall remain in force and effect after such date unless modified as provided in the amended section. Therefore, the requirements of 40 CFR 61.05 to 61.08, including preconstruction permitting requirements, for new and modified sources subject to existing NESHAPS regulations are still applicable.

In summary, the pollutants currently regulated under the Act as of March 1991 that are still subject to Federal PSD review and permitting requirements are:

- Carbon monoxide
- Nitrogen oxides
- Sulfur dioxide
- Particulate matter and PM-10
- Ozone (volatile organic compounds)
- Lead (elemental)
- Fluorides
- Sulfuric acid mist
- Total reduced sulfur compounds (including H_2S)
- CFC's 11, 12, 113, 114, 115
- Halons 1211, 1301, 2402
- Municipal waste combustor (MWC) acid gases, MWC metals and MWC organics

2. Hazardous Air Pollutants that are Regulated as One Component of a More General Pollutant Under Other Provisions of the Clean Air Act are Still Regulated.

Any hazardous air pollutants listed in section 112(b)(1) which are regulated as constituents of a more general pollutant listed under section 108 of the Act are still subject to PSD as part of the more general pollutant, despite the exemption in Title III. For example, volatile organic compounds (VOC's) (a term which includes benzene, vinyl chloride, methanol, toluene, methyl ethyl ketone, and thousands of other compounds) are still regulated as VOC's (but not as individual pollutants such as benzene, etc.) under the PSD regulations because these pollutants are ozone precursors, not because they are air toxics. Also, particulates (including lead compounds and asbestos) are still regulated as particulates (both PM-10 and particulate matter) under the PSD regulations. Lead compounds are exempt from Federal PSD by Title III, but the elemental lead portion of lead compounds (as tested for in 40 CFR part 60, appendix A, Method 12) is still considered a criteria pollutant subject to the lead NAAQS and still regulated under PSD.

3. Toxic Effect of Unregulated Pollutants Still Considered in BACT Analysis.

Based on the remand decision on June 3, 1986 by the EPA Administrator in *North County Resource Recovery Associates* (PSD Appeal No. 85-2), the impact on emissions of other pollutants, including unregulated pollutants, must be taken into account in determining BACT for a regulated pollutant. When evaluating control technologies and their associated emissions limits, combustion practices, and related permit terms and conditions in a BACT proposal, the applicant must consider the environmental impacts of all pollutants not regulated by PSD. Once a project is subject to BACT due to the emission of nonexempted pollutants, the BACT analysis should therefore consider all pollutants, including Title III hazardous air pollutants previously subject to PSD, in determining which control strategy is best.

PSD Class I Boundary Issues

1. PSD Applicability Coverage Changes as Class I Area Boundaries Change

Sections 162(a) and 164(a) of the amended Act specify that the boundaries of areas designated as Class I must now conform to all boundary changes at such parks and wilderness areas made since August 7, 1977 and any changes that may occur in the future. The EPA does not believe that Congress intended to create the turmoil which would occur if this redesignation required the modification of permits issued between August 7, 1977 and November 15, 1990, or the resubmission and reevaluation of complete permit applications submitted prior to enactment of the 1990 Amendments. Thus, for this reason, applications considered complete prior to November 15, 1990 should be processed as submitted without regard to the new Class I area boundaries. Exceptions to this general policy are in the area of increment consumption and air quality related values (including visibility), as discussed below.

For an applicant who submitted a complete PSD application prior to November 15, 1990, if all other PSD requirements are met, a permit may be issued based on the Class I analysis as submitted in the application, unless the reviewing authority finds, on a case-by-case basis, that additional analysis is needed from the applicant to address suspected adverse impacts or increment consumption problems due to the expanded boundaries of the Class I areas. Any existing increment violations in the new boundaries of Class I areas must be remedied through a SIP revision pursuant to 40 CFR 51.166(a)(3).

The PSD applications not considered complete before November 15, 1990 must consider the impact of both existing sources and the new or modified source on the Class I areas as defined by the 1990 Amendments. Thus, the complete application must consider the impacts on the entire Class I area based upon the boundaries in existence of the date of submittal of a complete application; as before, if a Class I boundary changes before the permit is issued, the reviewing authority may find, on a case-by-case basis, that additional analysis is needed from the applicant to address suspected adverse impacts or increment consumption problems due to expanded Class I Area boundaries.

NSR Nonattainment Issues

1. NSR Construction Permit Requirements in Nonattainment Areas

In many States, the existing approved Part D permit program by its terms covers all designated nonattainment areas in the State.

so a Part D permit program will automatically apply to the new and expanded nonattainment areas which are established under provisions of Title I of the 1990 Amendments. Thus, until new rules are adopted for these new or expanded nonattainment areas, States should apply the requirements of their existing approved Part D permit program. However, in other States, a Part D program may be limited to specified areas and does not apply to new or expanded areas. In these cases, States must implement a transitional permitting program until their existing Part D programs are revised to meet the requirements of the 1990 Amendments and expanded to cover all nonattainment areas in the State. Otherwise, both the goals of part D and Congress' intent in creating new or expanded nonattainment areas will be frustrated.

The EPA regulations already provide for these new or expanded designated nonattainment areas because the Emission Offset Interpretations Ruling (40 CFR part 51, appendix S) governs permits to construct between the date of designation and the date an approved Part D plan is made applicable to the new nonattainment area (see 40 CFR 52.24(k)). Until a State's new Part D plan is approved by EPA, if a State wishes to issue a permit for a major stationary source or major modification in a new or expanded designated nonattainment area, the State should comply with the requirements of appendix S. Among other things, appendix S requires a major source seeking to locate in a nonattainment area to (1) meet the lowest achievable emission rate for such source, (2) provide offsets from existing sources in the area, and (3) show that the offsets will provide a positive net air quality benefit (see 40 CFR part 51, appendix S, section IV.A). The EPA believes that in order to carry out the intent of appendix S, offsets should be required for sources in all categories and in all instances should be calculated on a tons per year basis (see 40 CFR part 51, appendix S, section IV.C).

Of course, neither appendix S nor the existing NSR rules incorporate the NSR changes mandated by Title I of the 1990 Amendments such as lower source applicability thresholds, increased emissions offset ratios, new definitions of major stationary source, and (for ozone nonattainment areas) requirements for nitrogen oxides (NOx) control and NOx emissions offsets. However, the 1990 Amendments require States to submit to EPA new NSR permit program rules for ozone nonattainment areas by November 15, 1992; for PM-10 nonattainment areas by June 30, 1992; and for most carbon monoxide (CO) nonattainment areas no later than 3 years from the date of the nonattainment designation. The EPA interprets this as an expression of congressional intent not to mandate that States adhere to the more stringent Title I NSR requirements in nonattainment areas during the time provided for State implementation plan (SIP) development. Thus, for NSR permitting purposes in nonattainment areas, the new NSR requirements in Title I are not in effect until the States, as required by the Act, adopt NSR permit program rules to implement the Title I provisions. In addition, EPA encourages any State having adequate authority for early implementation of the NSR changes to do so as soon as possible.

If States fail to submit to EPA the new NSR permit program rules for nonattainment areas by the deadlines in the amended Act, EPA intends to impose in these nonattainment areas a Federal implementation plan (FIP) embodying such requirements. Currently, EPA intends to propose revised NSR regulations at 40 CFR part 52 that would implement the new Title I NSR requirements under a FIP in a State if that State's revised NSR rules to implement Title I are not submitted in approvable form to EPA and made effective within the State by the deadlines established by the 1990 Amendments.

The area designation in effect on the date of *permit issuance* by the reviewing agency determines which regulations (Part C or Part D) apply to that permit. In other words, the PSD permit regulations apply to pollutants for which the area is designated as attainment or unclassifiable, and the NSR nonattainment permit regulations apply to pollutants for which the area is designated nonattainment (see 40 CFR 51.166(i) (3) and (5); and 40 CFR 52.21(i) (3) and (5)). Under these regulations, a PSD permit for a pollutant cannot be issued in an area that is designated nonattainment for that pollutant. For the situation where a source receives a PSD or other permit prior to the date the area is designated as nonattainment, the permit remains in effect as long as the source commences construction within 18 months after the date of nonattainment designation of the area, does not discontinue construction for more than 18 months, and completes construction within a reasonable time (see 40 CFR 52.24 (g) and (k)). Although the PSD regulations provide for extension of these deadlines, no extension would be appropriate where the area has been designated as nonattainment following permit issuance. Accordingly, if any of these construction provisions are not met, the PSD permit or other permit will not be extended, and the source (if subject to the nonattainment provisions) must obtain a nonattainment permit prior to commencing (or continuing) construction.

The 1990 Amendments create some new and expanded nonattainment areas by operation of law. Other nonattainment area changes are expected as the States and EPA complete the designation process prescribed in amended section 107(d). Because of these provisions, the dates areas switch from attainment to nonattainment for NSR purposes vary by pollutant. However, except for the two instances where the Amendments create changes by operation of law, the new designations and expanded boundaries will not be effective for NSR purposes until EPA promulgates the changes. The promulgations will be announced in the Federal Register.

Congress created new PM-10 nonattainment areas through designations that became effective upon enactment of the 1990 Amendments on November 15, 1990 (see section 107(d)(4)(B)). Specifically, Congress designated Group I areas and areas where violations of the PM-10 NAAQS had occurred prior to January 1, 1989 as nonattainment. The EPA published a list of these PM-10 areas in a Federal Register notice (see 55 FR 45799, October 31, 1990; see also 52 FR 29383, August 7, 1987). The EPA plans to publish a notice in the Federal Register listing these areas as nonattainment in the near future, but they are already considered nonattainment areas as of November 15, 1990.

Similarly, the 1990 Amendments expand by operation of law some CO and ozone nonattainment areas. However, these changes did not become effective with passage but rather on December 30, 1990. The specifics are as follows:

Section 107(d)(4)(A)(iv) of the amended Act provides that, with the exception explained below ozone and CO nonattainment areas located within metropolitan statistical areas (MSA) and consolidated metropolitan statistical areas (CMSA) which are classified as serious, severe, or extreme for ozone or as serious for CO are automatically expanded to include the entire MSA or CMSA. This expansion became effective by operation of law 45 days after enactment unless the Governor submitted a notice by this deadline of the State's intent to seek a modification of the expanded boundaries pursuant to the procedures set forth in section 107(d)(4)(A)(v). So if a State did not provide this notice, the nonattainment boundaries of all serious, severe, and extreme ozone nonattainment areas in the State and all serious CO areas in the State expanded to include the entire MSA or CMSA on December 30, 1990. If a State did provide timely notice, the Administrator has up to 14 months from enactment to resolve the State's challenge. Until EPA promulgates a resolution of the State's challenge, the old boundaries remain in effect.

Except for these two cases where new or expanded boundaries have been created by operation of law, nonattainment area changes will not be considered effective until the changes are promulgated by the EPA. As to most new areas or expansions of previously-designated nonattainment areas, this will occur 240 days after enactment (see section 107(d)(4)(A) (i) and (ii)). Newly-created ozone and CO nonattainment areas will be considered part of a designated nonattainment area for NSR purposes at the time of promulgation.

2. Status of Construction Bans

Pursuant to section 110(n)(3), an existing construction ban that was imposed due to the absence of approved Part D NSR rules remains in effect until a revised NSR SIP is approved. Existing construction bans imposed due to disapproval of primary sulfur dioxide NAAQS attainment plans also remain in effect. A Federal Register notice will be published soon announcing the status of construction bans in general and also lifting specific bans where appropriate. Should a construction ban be lifted in any area designated as nonattainment, and the area lacks an approved Part D NSR rule, the State should meet the requirements of 40 CFR part 51, appendix S, in issuing permits to

major new sources or major modifications prior to the adoption of NSR rules meeting the requirements of the 1990 Amendments.

3. Federal Implementation Plans Remain in Effect

The NSR permitting program in an existing FIP remains in effect until a SIP is approved or a revised FIP is adopted.

4. Use of Previously-Approved Growth Allowances Is Prohibited

Section 173(b) invalidates growth allowances in existing SIP's in areas that received a SIP call prior to enactment of the 1990 Amendments, or that receive one thereafter. For NSR permits issued on or after November 15, 1990, previously-approved growth allowances cannot be used in these areas. Construction permits cannot be issued in SIP-call areas under existing EPA-approved Part D programs to the extent that such permits rely on previously-approved growth allowances. Case-by-case emission offsets must be obtained for any such permits, and other existing Part D requirements must be met.

5. Existing NSR Permitting Rules Continue To Apply in the Northeast Ozone Transport Region (NOTR)

The 1990 Amendments establish a single ozone transport region comprised of the States of Connecticut, Delaware, Maine, Maryland, Massachusetts, New Hampshire, New Jersey, New York, Pennsylvania, Rhode Island, Vermont, and the CMSA that includes the District of Columbia and part of the State of Virginia. For this transport region, including all attainment areas within its boundaries, new section 184(b)(2) specifies that any stationary source that emits or has the potential to emit at least 50 tons per year of VOC's shall be considered a major stationary source and subject to the requirements which would be applicable to major stationary sources if the area were classified as a moderate ozone nonattainment area. For NSR purposes, the requirements of section 184(b)(2) are not in effect in a State until the State submits a new or revised SIP that includes the requirements (or EPA imposes a FIP implementing those requirements). A State in the NOTR has until November 15, 1992 to submit to EPA the new or revised NSR rules addressing the new requirements.

Appendix E

I. Introduction

The EPA is issuing this CTG document under section 182(b) of the Clean Air Act, as amended. Under section 182(b), States must develop RACT rules for sources "covered by a CTG document issued by the Administrator between November 15, 1990 and the date of attainment." The State must submit these RACT rules "within the period set forth by the Administrator in issuing the relevant CTG document." One type of "CTG document" is a CTG: a CTG is a technical document that sets forth a presumptive level of RACT controls for a source category. The Act provides that EPA must issue eleven CTG's by November 15, 1993. In addition, the Act specifically requires the Agency to prepare CTG's for aerospace coatings and ship building and repair within the same timeframe.

This document is not a technical CTG, but rather a second type of CTG document—a document that lists the eleven CTG's EPA anticipates publishing in accordance with section 183(a) and establishes time tables for submittal of RACT rules for sources that are not ultimately covered by a CTG issued by November 15, 1993. The EPA believes that it is necessary to issue this document at this time so that States will be able to determine which sources and source categories fit within the RACT rule submittal requirement for sources that EPA expects to be covered by a post-enactment CTG.

II. List of Eleven CTG's

The EPA plans to issue the following CTG's in accordance with section 183(a).

1. Synthetic organic chemical manufacturing industry (SOCMI) distillation;
2. SOCMI reactors;
3. Wood furniture;
4. Plastic parts coating (business machines);
5. Plastic parts coating (other);
6. Offset lithography;
7. Industrial wastewater;
8. Autobody refinishing;
9. SOCMI batch processing;
10. Volatile organic liquid storage tanks; and
11. Clean up solvents.

III. Authority

Under section 182(b)(2), States must adopt RACT rules for three general groups of sources: (A) Those covered by a post-enactment CTG document; (b) those covered by a pre-enactment CTG; (c) "all other major stationary sources of VOC's." Section 182(b)(2) also establishes the timing for State submittal and source implementation of RACT rules for these three groups. For sources covered by a post-enactment CTG document, the State must submit RACT rules within the period established in the relevant CTG document. For the other two groups, the Act provides specific dates for submittal, November 15, 1992, and implementation, no later than May 31, 1995.

Alone, subparagraphs (A), (B) and (C) seem to set forth three distinct groups of sources. However, the submittal dates under the second portion of the provision potentially could blur the line between these three groups if EPA does not issue before November 15, 1992, a CTG document covering all sources for which it plans to issue a CTG under section 183(a). At that time, States would need to submit RACT rules for all other major stationary sources—those for which neither a pre-enactment CTG nor a post-enactment CTG document had been issued.

The EPA's obligation to issue the eleven CTG's does not ripen until November 15, 1993, and EPA does not anticipate issuing all of these CTG's before November 15, 1992. Therefore, to the extent EPA does not issue a CTG document before November 15, 1992, States would be required to submit non-CTG RACT rules for sources that could in the future be covered by a CTG. In addition, at the time the CTG document was issued, the State could then be required to submit a new rule, consistent with the CTG document, thereby duplicating its earlier effort.

In order to relieve the States from being required to duplicate rules and to relieve sources from potentially being subject to two different requirements within a short period, EPA is issuing this CTG document to retain the sharp distinction between the three different groups in subparagraphs (A), (B), and (C). If a State believes that one of the eleven CTG's listed in Section II will cover a particular major source, the State should follow the timing provisions of Section IV, below for submittal of a rule applicable to that source. The State should identify those sources in its November 15, 1992 RACT submittal.

IV. Time Table

The EPA is establishing the following general time table for States to submit RACT rules for sources that it identifies in a November 15, 1992 submittal as being a source covered by a post-enactment CTG document.

(1) on November 15, 1992, the State must submit a list of major stationary sources that it anticipates will be subject to one of the CTG's listed in Section II, which EPA plans to issue by November 15, 1993.

(2) For those major sources on the list submitted by the State in the 1992 submittal that are not covered by a CTG that EPA has issued by November 15, 1993, the State must submit a RACT rule by November 15, 1994 that requires implementation of RACT by May 15, 1995.

(3) For sources covered by a CTG issued under section 183(a) and for which the State has not, by the date of such issuance, adopted an approvable RACT rule, the State must submit a RACT rule in accordance with the time schedule set forth in the relevant CTG.

(4) For sources subject to a RACT rule that the State adopted and EPA approved under section 182(b)(2) prior to EPA's issuance of an applicable CTG, EPA will work with the State to determine whether the existing rule should be revised once a CTG has been issued that would apply to that source.

[FR Doc. 92-9866 Filed 4-27-92; 8:45 am]

BILLING CODE 6550-50-M

UNITED STATES ENVIRONMENTAL PROTECTION AGENCY
Office of Air Quality Planning and Standards
Research Triangle Park, North Carolina 27711

JUL 9 1992

MEMORANDUM

SUBJECT: Processing of State Implementation Plan (SIP) Submittals

FROM: John Calcagni, Director
Air Quality Management Division, OAQPS (MD-15)

TO: Director, Air, Pesticides and Toxics Management Division, Regions I and IV
Director, Air and Waste Management Division, Region II
Director, Air, Radiation, and Toxics Division, Region III
Director, Air and Radiation Division, Region V
Director, Air, Pesticides, and Toxics Division, Region VI
Director, Air and Toxics Division, Regions VII, VIII, IX, and X

This memorandum provides guidance concerning the processing of SIP submittals. In general, there are three situations that can occur related to each required submittal: the State may fail to submit the required plan, the State may make a submittal that is not complete, or the State may make a complete submittal. Once a State submits a SIP and the Environmental Protection Agency (EPA) has determined that the submittal is complete, EPA must either approve or disapprove the submittal within a specified time period. However, if the State fails to make a required submittal or makes a submittal that is determined to be incomplete, the sanctions and Federal implementation plan (FIP) provisions of sections 179 and 110(c), respectively, will be triggered. In addition, disapproval of a submittal also triggers the sanctions and FIP provisions. These provisions are discussed in further detail in this memorandum.

There are, however, three alternatives to full approval or full disapproval of a complete SIP submittal: partial approval, limited approval, and conditional approval. Each of these is discussed in more detail below along with some guidance as to when each might be used. In addition, Attachment 1 to this

memorandum contains several examples of how these may be used. Attachment 2 to this memorandum is a table that summarizes the requirements discussed below.

Partial Approval/Disapproval

Section 110(k)(3) of the amended Clean Air Act (Act) addresses the situation in which an entire submittal, or a separable portion of a submittal, meets all applicable requirements of the Act. Where the entire submittal meets all the requirements of the Act, EPA will fully approve the entire submittal. In the case where a separable portion of the submittal meets all of the applicable requirements, partial approval may be used to approve that part of the submittal and disapprove the remainder. It is important that the two parts of the submittal be separable. By separable, EPA means that the action it anticipates taking will not result in the approved rule(s) being more stringent than the State anticipated. See Bethlehem Steel Corp. v. Gorsuch, 742 F. 2d 1028 (7th Cir. 1984); Indiana and Michigan Elec. Co. v. U.S. E.P.A., 733 F. 2d 489 (7th Cir. 1984). For example, EPA cannot approve part of a submittal that specifies control measures and disapprove the part that specifies the test methods associated with those control measures. The EPA has frequently taken a partial approval approach in the past to process groups of rules that are submitted together. The EPA can approve some of the rules and disapprove the rest as long as the rules that are disapproved do not affect those that are approved. The disapproval of any part of a required SIP submittal starts the clocks discussed above for sanctions and FIP's.

Limited Approval/Disapproval

In some cases, a submittal may contain certain provisions that meet the applicable requirements of the Act along with other provisions that do not meet the requirements, and the provisions are not separable. Although the submittal may not meet all of the applicable requirements, EPA may want to consider whether the submittal as a whole has a strengthening effect on the SIP. If that is the case, limited approval may be used to approve a rule that strengthens the existing SIP as representing an improvement over what is currently in the SIP and as meeting some of the applicable requirements of the Act.

The Act does not expressly provide for limited approvals. Rather, EPA is using its "gap-filling" authority under section 301(a) of the Act in conjunction with the section 110(k)(3) approval provision to interpret the Act to provide for this type of approval action.

Through a limited approval, EPA would concurrently, or within a reasonable time thereafter, disapprove the rule, under the relevant provision(s) of Part D, for not meeting all of the applicable requirements of the Act. As with the limited approval action the limited disapproval is a rulemaking action, and it is subject to notice and comment. Under section 110(k), EPA must take final rulemaking action on SIP submittals within 12 months of the date EPA determines the submittal is complete or the submittal is automatically deemed to be complete if EPA fails to make a completeness determination. As a general matter, although the statute directs EPA to act within that timeframe, EPA's failure to finalize the disapproval portion of the action within that 12-month timeframe will not affect the validity of any prior or subsequent limited approval or limited disapproval.[1] The EPA's failure to take action prior to the expiration of the 12-month period could, however, subject EPA to a lawsuit to compel such an action.

A key distinction between the limited approval and a partial approval is that under a limited approval EPA's approval action goes to the entire rule. In other words, although portions of a rule prevent EPA from finding that the rule meets a certain requirement of the Act, EPA believes that the rule, as a whole, strengthens the SIP. Therefore, EPA approves the entire rule--even those portions that prohibit full approval. Likewise, when EPA issues the limited disapproval, the disapproval applies to the entire rule as failing to meet a specific requirement of the Act. The rule remains a part of the SIP, however, under the limited disapproval, because the rule strengthens the SIP. The disapproval only applies to whether the submittal meets a specific requirement of the Act and does not affect incorporation of the rule into the approved, federally enforceable SIP.

The primary advantage to using the limited approval approach is to make the State submittal federally enforceable and to increase the SIP's potential to achieve additional reductions. Therefore, limited approval should not be used to approve any rule that is unenforceable for all situations--for example, a rule that lacks a test method. These rules and any other rules that do not have an overall strengthening effect on the SIP should be disapproved. Limited approval can be used, however,

---

[1] The March 22, 1991 memorandum from John Calcagni discussed the potential impact of Abramowitz v. U.S. E.P.A., 832, F. 2d 1071 (9th Cir. 1988), on EPA's decision to split the approval and disapproval portions of a limited approval. After reevaluating that case, we believe it may have a narrower impact than initially described and, therefore, generally would not impact the timing of limited approval/disapproval actions.

where the rule is unenforceable for some limited number of situations but is enforceable for the majority of situations, if the rule, as a whole, strengthens the SIP.

The disapproval coinciding with (or following) the limited approval also starts the sanctions and FIP clocks discussed above. With the limited approval EPA may or may not have a commitment from the State to correct the deficiency. The EPA may choose to use the limited approval approach (instead of conditional approval) in the case where the State has submitted a commitment as part of a rule but EPA has reason to believe that the State will not be able to meet the commitment (as discussed below). Where a limited approval/disapproval approach is taken, the notice of proposed rulemaking (NPR) should clearly identify which requirements have not been met and what action would be required on the part of the State to meet those requirements.

Conditional Approval

Under section 110(k)(4) of the Act EPA may conditionally approve a plan based on a commitment from the State to adopt specific enforceable measures within 1 year from the date of approval. If the State fails to meet its commitment within the 1-year period, the approval is treated as a disapproval. We expect that conditional approvals will be used only in rare situations that merit special consideration. We will evaluate specific types of SIP submittals [e.g., reasonably available control technology (RACT) catch-ups, particles with an aerodynamic diameter less than or equal to a nominal 10 micrometers (PM-10) SIP's] to determine whether certain elements of that type of submittal, or that type of submittal as a whole, merit conditional approval. For this reason and to ensure consistency, Regions should not use conditional approvals without input from Headquarters as to whether such an approach is appropriate. Furthermore, as any statutory deadline approaches, we may issue guidance regarding the appropriate use of conditional approval with respect to that specific requirement.

Once a determination has been made that a specific type of submittal can be considered for conditional approval, Regions must make a determination of whether an individual State submittal should be conditionally approved. The first consideration should be whether the State has made (or agrees to make) a commitment to adopt specific enforceable measures within 1 year of EPA approval. The commitment must be made in writing

by the party responsible for adopting the specified measures before the plan is conditionally approved, and the commitment must be submitted by the State.[2]

In addition, to the extent that the commitment materially alters the existing rule (in respects that the public could not reasonably have anticipated would result from the public review of the existing rule), or is a commitment to adopt an entire rule or set of rules, the commitment must be a SIP revision submittal by the State. In many cases, the determination of whether the commitment materially alters the underlying rule may be based on whether a similar issue was raised during the earlier State proceedings on the submitted rule. In general, each commitment will need to be examined to determine whether it materially alters the submitted rule. As with any SIP revision, in order for EPA to accept the commitment as a SIP revision, the State must have provided notice and public hearing on the submitted commitment. However, EPA has the discretion to parallel process commitments and in limited circumstances may propose conditional approval of the commitment and allow the State process to proceed on a parallel track.

As a general matter, the greater the extent to which a submittal is lacking in important plan elements, the less appropriate the use of conditional approval may be. It should be noted, however, that there may be circumstances under which EPA would accept a SIP revision consisting of a commitment only (without specifically adopted rules) as a candidate for conditional approval. In such cases, the commitment should also be accompanied by a work plan detailing any specific measures to be adopted, the steps that will be taken to adopt the measures, and the schedule for adoption of those measures. As stated earlier, a submittal that consists entirely of a commitment will be considered a SIP revision that is subject to the State process for submitting SIP revisions, e.g., notice and a public hearing.

Where the submittal contains specifically adopted rules that need some revisions or corrections to be fully-approvable, the commitment may not need to be as comprehensive. The commitment should, however, be as explicit as possible concerning the measures that will be adopted, the steps that will be taken to adopt the measures, and the schedule for adoption of those measures.

---

[2] Although the commitment must identify the measures to be adopted and contain a schedule for adopting such measures, it is not necessary for the commitment itself to be enforceable in a State court.

Because the conditional approval relies on a commitment from the State, EPA would need some level of confidence that the State would be able to meet such a commitment. In making a determination as to whether a State could reasonably be expected to meet its commitment, EPA would need to consider a number of factors such as:

- the amount of technical work necessary for the measures to be adopted;
- whether adoption of the measures is expected to be controversial;
- the average length of the State adoption process;
- how far along in the process the State is; and
- the State's past track record.

It should be noted that these are only some of the factors that should be considered. Each Region, in making a determination regarding the credibility of the State's commitment, may have to look at a number of other factors. The Region should clearly explain, either in the NPR or in a technical support document, the rationale for these determinations.

In addition to the determination of whether the State's commitment is credible, the Region must make a determination as to whether it is appropriate to conditionally approve a revision on the merits of that revision. Conditional approval might typically be used in the same types of situations as the limited approval. As with the limited approval, one of the main advantages of the conditional approval approach is to make the State submittal (where the submittal contains control requirements and not just a commitment to adopt enforceable measures) federally enforceable and to increase its potential to achieve additional reductions. Because the conditionally approved submittal will become a part of the SIP, the Region should be certain that the approval of the commitment will not weaken the existing SIP. The Region may also want to consider when the plan (or plan element) that has been submitted was due.

The NPR for a conditional approval should clearly identify which requirements are the subject of the commitment and, therefore, have not been met. In addition, both the NPR and the State's commitment should clearly identify what action is required on the part of the State. Unlike the limited approval/disapproval, the conditional approval does not immediately start the sanctions and FIP clocks. These clocks start if and when the approval is converted to a disapproval.

There are at least two ways that the conditional approval

may be converted to a disapproval.[3] First, if the State fails to adopt and submit the specified measures by the end of 1 year (from the final conditional approval), or fails to submit anything at all, EPA will have to issue a finding of disapproval but will not have to propose the disapproval. That is because in the original proposed and final conditional approval, EPA will have provided notice and an opportunity for comment on the fact that EPA would directly make the finding of disapproval (by letter) if the State failed to submit anything.[4] Therefore, at the end of 1 year from the conditional approval, the Regional Administrator (RA) will send a letter to the State finding that it had failed to meet its commitment and that the SIP submittal is disapproved. The 18-month clock for sanctions and the 2-year clock for a FIP start as of the date of the letter. Subsequently, a notice to that effect will be published in the Federal Register, and appropriate language will be inserted in the Code of Federal Regulations. Similarly, if EPA receives a submittal addressing the commitment but determines that the submittal is incomplete, the RA will send a letter to the State making such a finding. As with the failure to submit, the sanctions and FIP clocks will begin as of the date of the finding letter.

Second, where the State does make a complete submittal by the end of the 1-year period, EPA will have to evaluate that submittal to determine if it may be approved and take final action on the submittal within 12 months after the date EPA determines the submittal is complete. If the submittal does not adequately address the deficiencies that were the subject of the conditional approval, and is therefore not approvable, EPA will have to go through notice-and-comment rulemaking to disapprove the submittal. The 18-month clock for sanctions and the 2-year clock for a FIP start as of the date of final disapproval. If EPA determines that the rule is approvable, EPA will propose approval of the rule. In either instance, whether EPA finally approves or disapproves the rule, the conditional approval remains in effect until EPA takes its final action.

---

[3] It should be noted that this disapproval can be a limited approval/disapproval. In some cases, the Regions may want to use such an approach to retain the enforceability of control measures. The NPR should indicate if this approach is planned.

[4] To provide for this contingency, in the final conditional approval, EPA would need to provide, for example, "If the State fails to make a submittal or makes only an incomplete submittal during the time period for submittal of the rule, EPA will issue a letter to the State which converts the conditional approval to a disapproval."

It should be noted that EPA will conditionally approve a certain rule only once. Subsequent submittals of the same rule that attempt to correct the same specifically identified problems will not be eligible for conditional approval.

Sanctions and FIP Requirements

Actions that Trigger the Sanctions and FIP Requirements

The actions EPA has the authority to take under the sanctions and FIP provisions of the Act correspond to the different steps EPA must follow as it reviews and processes SIP submittals. As discussed previously, the Act in section 179[5] requires EPA to impose sanctions based on four types of actions (findings[6]) provided in section 179(a):

(1) a finding that a State has failed to submit a SIP, a SIP element,[7] or has submitted a SIP or SIP element that does not satisfy the completeness criteria;

(2) that EPA disapproval of a SIP submission for a nonattainment area based on its failure to meet one or more elements required by the Act;

(3) a determination that the State has not made any other submission, has made an inadequate submission (as required by the Act), or that EPA disapproves such a submission; or

(4) a finding that a requirement of an approved plan is not being implemented.

---

[5] Section 110(m) grants EPA broad authority to apply either sanction listed in section 179(b) " . . . at any time (or at any time after) a finding . . ." under section 179(a) with respect to any portion of the State, with certain exceptions. This memorandum is intended to address the application of sanctions under section 179. The section 179 sanctions apply only to the area for which a finding has been made.

[6] Although subsections (1)-(4) refer to findings, determinations and disapprovals, for simplicity these four actions will be referred to as "findings."

[7] Since EPA does not intend to issue a list of such elements per se, to ensure that such findings are consistently applied, findings of failure to submit SIP elements should be decided on a case-by-case basis in conjunction with Headquarters. The basis for the finding should be clear and well-supported.

Under section 110(c)(1), EPA is required to promulgate a FIP based on two types of findings:[8]

(1) a finding that a State has failed to make a required submittal or that a submittal does not satisfy the minimum completeness criteria established under section 110(k)(1)(A), or

(2) the EPA disapproval of a SIP submittal in whole or in part.

The Sanctions and FIP Clocks

Although EPA may make any of the findings discussed above to trigger the 179(a) sanctions and 110(c)(1) FIP requirements, these findings do not require the immediate imposition of sanctions or promulgation of a FIP. Instead the Act provides a "clock" for sanctions and FIP's. For plan submittals required under Part D or in response to a SIP call, section 179(a) allows for up to 18 months for the State to correct the deficiency that is the subject of a finding or disapproval before EPA is required to impose sanctions. Section 110(c)(1) provides for up to 2 years for the State to correct the deficiency and for EPA to approve a new submittal before EPA is obligated to promulgate a FIP.

The Administrator has delegated the authority to make findings of failure to submit to the RA's. The findings are made via letters from the RA's to State governors or other State officers to whom authority has been delegated. The letter itself triggers the sanctions and FIP clocks. For disapprovals, the Federal Register notice in which EPA takes final action triggers the sanctions and FIP clocks. Findings of nonimplementation have traditionally been processed as rulemaking actions through Headquarters. The sanctions clock will start when EPA makes a finding of nonimplementation in the Federal Register after soliciting comment on the proposal (the FIP clock is not triggered by such a finding). Although the findings of failure to submit and SIP disapproval start both the sanctions and FIP clocks, what is required to stop the clocks differs; therefore, they are discussed separately. Note that in some cases the sanctions clock may be stopped while EPA remains under an obligation to promulgate a FIP.

---

[8] Since the deficiency is a failure to implement after a State has submitted a plan and EPA has approved it, it is unnecessary for this finding to trigger a requirement that EPA develop the required rule (i.e., prepare a FIP) and section 110(c)(1) does not require it.

Sanctions Clock

Under section 179(a), in order to stop the sanctions clock, the State must correct the "deficiency" prompting the finding. The EPA must apply one of the two sanctions available under section 179(b) within 18 months after the date of the finding and both sanctions at 24 months, unless the deficiency has been corrected. Section 179(a) also requires EPA to apply both sanctions after 18 months if EPA finds a lack of good faith on the part of the State.

Attachment 3 provides seven scenarios illustrating how the sanctions clock operates, including examples of what constitutes a deficiency correction (and hence a stopping of the clock). In brief, for purposes of the sanctions clock, findings of failure to submit plans or complete plans are corrected when EPA finds the submittal complete[9] [although the FIP clock is still running (see FIP clock discussion)] and disapprovals are corrected when EPA takes final rulemaking action approving the plan. In addition, findings of nonimplementation are corrected when EPA makes a finding in the Federal Register that the State is now implementing that provision.

FIP Clock

Under the FIP provisions, either a SIP must be approved or a FIP must promulgated within 2 years of one of the two findings discussed above. In other words, EPA must approve the State submittal in order to stop the FIP clock. Where the sanctions and FIP clocks were started by EPA disapproval of a plan, the clocks will run concurrently. In this case, to correct the deficiency for purposes of the sanctions clock, the State must make a submittal which EPA finds approvable. Such a determination is not made until EPA issues a final approval of the plan. Final approval of a plan is also what is needed to stop the FIP clock. Attachment 3 provides seven scenarios of how the FIP clock operates.

---

[9] Where EPA made a finding of failure to submit and subsequently finds that the State has made a complete submittal for the plan or plan element that was the subject of the finding, the letter that makes the finding of completeness will notify the State that the sanctions clock is stopped as of the date of that letter. The Region should periodically announce any such findings that represent corrections of failure to submit in the Federal Register.

Available Sanctions

For plan submittals required under Part D or in response to a SIP call, if the State does not correct the specific deficiency within the 18-month period allowed under section 179(a), EPA must apply at least one of the two sanctions available under section 179(b)[10] as described:

(1) Highway funding sanctions. The EPA may impose a prohibition on the approval by the Secretary of Transportation of certain projects, or the awarding of certain grants.

(2) Offset sanctions. A ratio of at least 2-to-1 will be required for emissions reductions within the nonattainment area to offset emissions from new or modified major facilities (as required under section 173).

Regions should determine which of the sanctions will be applied at the 18- and 24-month milestones on a case-by-case basis. As discussed previously, EPA must apply both sanctions at the 18-month mark if it finds there is a lack of good faith effort. Such a determination should be made on a case-by-case basis in consultation with Headquarters. In addition, once one of the sanctions has been imposed, EPA must impose the second sanctions if the deficiency has not been corrected within 6 months (regardless of the State's efforts). Headquarters will issue a proposal of the sanctions and the Regional Office will issue the final rule imposing sanctions.

Conclusion

General comments on this memorandum should be directed to Pam Johnson of the Regional Operations Branch at (919) 541-5270. Comments related specifically to ozone or carbon monoxide should be directed to Carla Oldham at (919) 541-3347. Comments related to particulate matter, sulfur dioxide, or lead should be directed to Chris Stoneman at (919) 541-0823.

cc: Regional Air Counsels, Regions I-X
Chief, Air Programs Branch, Regions I-X
Jane Armstrong, OMS (Ann Arbor)
William Becker, STAPPA/ALAPCO
Denise Devoe, OAQPS (ANR-443)

---

[10] In addition, section 179(a) provides for an air pollution grant sanction that applies to grants EPA may award under section 105. However, since it is not a sanction provided under section 179(b), it is not one of the sanctions EPA must impose after the 18-month period.

Tom Helms, AQMD (MD-15)
Bill Laxton, TSD (MD-14)
Ed Lillis, AQMD (MD-15)
Rich Ossias, OGC (LE-132A)
Joe Paisie, AQMD (MD-15)
John Rasnic, SSCD (EN-341W)
John Seitz, OAQPS (MD-10)
Paula Van Lare, OMS (ANR-445)
Lydia Wegman, OAQPS (MD-10)

Attachment 1

Example 1

A State submits a SIP revision containing four rules: (1) control requirements for bulk gasoline plants, (2) control requirements for gasoline dispensing facilities (Stage I), (3) leak detection requirements for gasoline tanks trucks, and (4) test methods that apply to these three rules. The EPA review of the rules shows that all of the rules except the Stage I rule meet the applicable requirements of the Act. The Stage I rule fails to require submerged fill loading for all storage tanks. This is inconsistent with EPA's RACT guidance and the State has failed to propose an alternative that it has demonstrated is RACT for the applicable sources.

Partial Approval

Under the partial approval option, EPA can approve the rules for bulk terminals and tank truck leaks, approve the test methods, and disapprove the Stage I rule. These rules are separable from the Stage I rule. Disapproval of the Stage I rule does not affect the stringency of the other three rules. Therefore, the other three rules may be approved under this provision. However, the submittal as a whole would only be partially approved.

Limited Approval of Stage I Rule

Under the limited approval approach, EPA could approve the Stage I rule as being an improvement over what is currently in the SIP and, at the same time or within a reasonable time after the approval (but no later than 12 months after the submittal is complete), disapprove the rule because it does not represent RACT. The sanctions and FIP clocks would start upon the final disapproval of the rule.

Conditional Approval

Alternatively, EPA could conditionally approve the Stage I rule if the State committed to revise the rule, within 1 year of the conditional approval, to require submerged fill loading. If the State then failed to make such a revision, EPA would issue a finding converting the conditional approval to a disapproval.

Example 2

If in example 1 the first three rules (containing control requirements) are all approvable but the fourth (containing the test methods) is either deficient or has not been submitted, then the submittal would have to be handled differently. Because a test method is critical in determining the stringency of a control requirement and is needed for the requirements to be enforceable, these rules cannot be considered separable and, therefore, partial approval would not be an option. In addition, because the control requirements will not be enforceable without a test method, it would not be appropriate to use either the limited or conditional approval approach.

Example 3

A State submits a SIP revision that contains four PM-10 rules, two for controlling emissions of fugitive dust and two for the control of residential wood combustion. The rules represent reasonable available control measures (RACM) and include (1) paving or stabilizing unpaved roads, (2) developing a traffic reduction plan for unpaved roads, (3) a mandatory episode curtailment program for residential wood combustion, and (4) encouraging changeover to new source performance standards and wood stoves. The third rule is deficient in that it does not provide a communication strategy on which the curtailment program is dependent.

Partial Approval

The EPA may approve the three rules which satisfy RACM but disapprove the episode curtailment program as failing to meet the RACM requirement. These rules are separable because disapproval of the curtailment program will not have any effect on the stringency or enforceability of the remaining rules.

Limited Approval

The EPA may approve the episode curtailment plan as strengthening the SIP by providing enforceable measures in a SIP which currently has no curtailment program. At the same time or within a reasonable time after the approval (but no later than 12 months after the submittal is complete), EPA must disapprove the rule as not representing RACM. Final disapproval of the rule would start the sanctions and FIP clocks.

Conditional Approval

The EPA may conditionally approve the rule if the State submits a commitment to submit a revised rule within 1 year of the approval. If the State then failed to make such a revision, EPA would issue a finding converting the conditional approval to a disapproval.

Attachment 2

Type of Approval	Separability	Commitment	Act Requirements	SIP Strengthening
Partial	rules must be separable	no commitment necessary	part to be approved must meet all applicable requirements	part to be approved must strengthen the SIP
Limited	deficient portion of submittal is not separable	no commitment necessary	does not have to meet <u>all</u> applicable requirements	submittal as a whole must strengthen the SIP
Conditional	deficient portion of submittal is not separable	State must commit to correct within 1 year	does not have to meet <u>all</u> applicable requirements	submittal as a whole must strengthen the SIP

Attachment 3: Sanctions and FIP Clocks Scenarios

Scenario 1: The EPA receives a SIP and finds it incomplete prior to the statutory due date of the SIP.

Although a finding that the State submitted an incomplete SIP is one of the section 179(a) findings, the sanctions and FIP clocks will not begin to run until after a submittal is due. This is because the finding must be based on the failure to submit a complete required SIP or SIP element and the submittal is not required until it is due under the statute. If a SIP submitted prior to a due date is still incomplete by the due date, then EPA will notify the State by letter that the plan remains incomplete and that the 18-month sanctions clock and the 2-year FIP clock have started.

Scenario 2: The EPA receives a SIP and finds it incomplete on or after the statutory due date of the SIP.

If EPA receives a SIP and finds it incomplete pursuant to section 110(k) on or after the statutory due date of the SIP, then, as in scenario 1, the State has failed to make a complete submittal under section 179(a). The EPA will notify the State by letter that the plan is incomplete and that the 18-month sanctions clock and the 2-year FIP clock have started.

Scenario 3: The EPA receives no submittal at the due date.

If EPA receives no submittal from a State to meet a statutory due date, then it may make a finding of failure to submit under section 179(a)(1), triggering the 18-month sanctions clock and the 2-year FIP clock.

Scenario 4: After the due date, EPA receives a SIP for which it originally made a finding of failure to submit.

Upon receiving the plan, the sanctions clock will continue to run during the completeness review and be stopped if EPA finds the plan complete and continue if EPA finds the plan incomplete. If the 18 months elapse during the time EPA is doing its completeness review, EPA will not impose sanctions unless it determines the plan incomplete. If sanctions have been imposed prior to the State's submittal, the sanctions will remain in place until EPA determines the submittal complete.

The FIP clock continues to run while EPA makes its completeness determination.

Scenario 5: The EPA originally makes a finding of failure to submit, then receives a SIP, finds it complete, but disapproves it in final rulemaking.

Upon a determination that the SIP is complete, the State corrects the deficiency that prompted the finding of nonsubmittal and the sanctions clock stops. A new sanctions clock will start

upon the final SIP disapproval rulemaking. The new sanctions clock will not stop until EPA has taken final action to approve the revised SIP submittal.

Even after the submittal is determined to be complete, EPA remains under obligation to promulgate a FIP. Therefore, the disapproval of the SIP does not start a new FIP clock.

Scenario 6: The EPA originally makes a finding of failure to submit, then receives a SIP, finds it complete, and approves it in final rulemaking.

Upon a determination that the SIP is complete, the State corrects the deficiency prompting the finding of nonsubmittal and the sanctions clock stops. The EPA remains under obligation to promulgate a FIP until EPA takes final rulemaking action to approve the SIP.

Scenario 7: The EPA finds that a State has failed to implement a SIP or SIP provision.

The EPA will make a finding of nonimplementation in the Federal Register after soliciting comment on the proposal. The sanctions clock will start upon EPA taking final action and stop when EPA makes a finding in the Federal Register after notice-and-comment rulemaking that the State has corrected the deficiency that prompted the finding. A finding of nonimplementation does not start a FIP clock.

Document Referenced in "PM-10 Guideline Document"
But Too Lengthy to Include in Appendix A

Document: 57 Federal Register 32,250 (July 21, 1992), Operating Permit Program

April 1993

UNITED STATES ENVIRONMENTAL PROTECTION AGENCY
Office of Air Quality Planning and Standards
Research Triangle Park, North Carolina 27711

SEP -3 1992

MEMORANDUM

SUBJECT: New Source Review (NSR) Program Supplemental Transitional Guidance on Applicability of New Part D NSR Permit Requirements

FROM: John S. Seitz, Director
Office of Air Quality Planning and Standards (MD-10)

TO: Addressees

The Clean Air Act Amendments of 1990 (1990 CAAA) made numerous changes to the NSR requirements in the Clean Air Act (Act). To address some immediate concerns generated by the 1990 CAAA, the Environmental Protection Agency (EPA) issued an initial NSR transitional memorandum on March 11, 1991, entitled "New Source Review Program Transitional Guidance." This memorandum supplements that effort by clarifying EPA guidance regarding the permitting of new or modified sources in situations where a State does not submit a State implementation plan (SIP) revision implementing the augmented Part D NSR provisions of the 1990 CAAA by the applicable statutory deadline. The statutory deadlines for submission of revised NSR SIP's are listed in the attachment. Moreover, as more fully set forth in the March 11, 1991 transitional memorandum, this supplemental memorandum sets forth nonbinding guidance that does not create any rights or otherwise predetermine the outcome of any procedures. Also, many of EPA's interpretations of the new Part D NSR requirements are in the "General Preamble for the Implementation of Title I of the Clean Air Act Amendments of 1990" (General Preamble) (see 57 FR 13498, 13552-556, April 16, 1992). These interpretations are not affected by this memorandum.

Title I of the 1990 CAAA requires that States with nonattainment areas or areas in the Northeast Ozone Transport Region (NOTR) submit to EPA, by specified deadlines, augmented new source permit rules which meet the amended requirements of Part D of Title I of the Act. For example, for NSR permit

programs in most ozone nonattainment areas and the NOTR, section 182 of the Act specifies increased offset ratios, lower source applicability thresholds, and presumptive treatment of nitrogen oxides (NO_x) as ozone (O_3) precursors. For ozone, the 1990 CAAA require that States submit SIP's meeting the amended Part D NSR requirements by November 15, 1992.

Where States do not submit the Part D NSR SIP by the applicable statutory deadline (and for purposes of determining the approvability of revised NSR SIP's), sources that have submitted complete permit applications (as determined by the reviewing authority) by the submittal deadline may receive final permits under existing State NSR rules. In this situation, such sources will be considered by EPA to be in compliance with the Act without meeting the amended Part D NSR provisions of the 1990 CAAA, provided they meet the following conditions:

1. The State and source move expeditiously towards final permit issuance.

2. Construction begins no later than 18 months from the date of permit issuance unless an earlier time is required under the applicable SIP.

3. Construction is not discontinued for a period of 18 months or more.

4. Construction is completed within a reasonable time. States may not grant permit extensions beyond these time periods unless the permittee is required in a federally-enforceable manner to meet the new Part D NSR provisions.

Sources approved for construction in distinct phases require additional clarification. Individual phases of a construction project are considered either as "mutually dependent" or "mutually independent" from the other phases. Mutually-dependent phases are those where construction of one phase necessitates the construction of the other in order to complete a given project or provide a different type (not level) of service. An example of a project with possible mutually-dependent phases is a kraft pulp mill, where all phases of construction are needed to complete the project and produce paper. On the other hand, an example of a project with possible independent phases is a three-boiler, electric power plant, where each boiler could be a mutually-independent phase providing different levels of electrical power.

For phased construction projects with complete permit applications submitted by the Part D NSR statutory deadline for SIP submittal, EPA will grandfather individual phases from meeting the new Part D NSR requirements, provided:

1. For mutually-dependent phases, if one of the facilities has met the construction conditions of this guidance (e.g., begins construction within 18 months of permit issuance), then all dependent phases specifically permitted at the same time will hold such status.

2. For mutually-independent phases, each phase that meets the construction conditions of this guidance (e.g., begins construction of that phase within 18 months of initial permit issuance) will hold such status.

Also, under today's guidance, where States miss the statutory deadline for Part D NSR SIP submittal, for sources that have not submitted complete permit applications by the SIP submittal deadline, EPA will also consider the source to be in compliance with the Act where the source obtains from the State a permit that is consistent with the substantive new NSR Part D provisions in the 1990 CAAA. The substantive new provisions are the new applicability thresholds, the new offset ratios, the offset requirements of section 173, and the NO_x requirements of section 182(f) for most O_3 nonattainment areas and the NOTR.

The State, of course, must be sure that all permits contain the minimum requirements for a Part D NSR permit as required by the current SIP or, where applicable, the Emission Offset Interpretative Ruling [40 CFR Part 51, Appendix S (Offset Ruling)].[1]

Please note that the Act allows States to implement the new Part D NSR provisions prior to the statutory deadlines and in a manner more stringent than EPA guidance or rules. Thus, today's guidance does not apply in any State to the extent that the State's own rules or transitional guidance is more stringent.

---

[1] The Act, as amended, requires offsets for all source categories, and emissions reductions are on a tons-per-year basis. To the extent Appendix S is incompatible with these statutory provisions, it must be considered superseded by the 1990 CAAA.

The Regional Offices should send this memorandum to their States. Questions concerning specific issues and cases should be directed to the appropriate EPA Regional Office. If you have any general questions, please contact Mr. Michael Sewell of the New Source Review Section at (919) 541-0873.

Attachment

Addressees
Director, Air, Pesticides and Toxics Division,
Regions I, IV, and VI
Director, Air and Waste Management Division, Region II
Director, Air, Radiation and Toxics Division, Region III
Director, Air and Radiation Division, Region V
Director, Air and Toxics Division, Regions VII, VIII, IX, and

ATTACHMENT

As required by the Clean Air Act Amendments of 1990, the statutory deadlines for States to submit new Part D new source review (NSR) rules to the Environmental Protection Agency are:

- May 15, 1992 for sulfur dioxide (SO_2) nonattainment areas without approved SO_2 SIP's prior to enactment [see section 191(b)];
- November 15, 1993 for all other SO_2 nonattainment areas designated prior to enactment [see section 172(b)];
- May 15, 1992 for nitrogen dioxide (NO_2) nonattainment areas [see section 191(b)];
- July 6, 1993 for lead nonattainment areas designated on January 6, 1992 [see section 191(a)];
- June 30, 1992 for particulate matter (PM-10) nonattainment areas [see section 189(a)(2)(A)];
- November 15, 1992 for ozone nonattainment areas and transport regions [see section 182(a)(2)(C)];
- November 15, 1992 for carbon monoxide (CO) nonattainment areas with a design value above 12.7 parts per million (ppm) [see section 187(a)(7)]; and
- November 15, 1993 for CO nonattainment areas with a design value of 12.7 ppm or less [see section 172(b)].

For future nonattainment designations, Part D NSR rules are due within 18 months from redesignation for all SO_2, NO_2, PM-10, and lead nonattainment areas [see sections 189(a)(2)(B) and 191(a)], and within 2 years of redesignation for ozone [see section 181(b)(1)] and many CO nonattainment areas (within 3 years for CO nonattainment areas with design values less than 12.7 ppm) [see section 186(b)(1)].

UNITED STATES ENVIRONMENTAL PROTECTION AGENCY
Office of Air Quality Planning and Standards
Research Triangle Park, North Carolina 27711

4 SEP 1992

MEMORANDUM

SUBJECT: Procedures for Processing Requests to Redesignate Areas to Attainment

FROM: John Calcagni, Director
Air Quality Management Division (MD-15)

TO: Director, Air, Pesticides and Toxics Management Division, Regions I and IV
Director, Air and Waste Management Division, Region II
Director, Air, Radiation and Toxics Division, Region III
Director, Air and Radiation Division, Region V
Director, Air, Pesticides and Toxics Division, Region VI
Director, Air and Toxics Division, Regions VII, VIII, IX, and X

Purpose

The Office of Air Quality Planning and Standards (OAQPS) expects that a number of redesignation requests will be submitted in the near future. Thus, Regions will need to have guidance on the applicable procedures for handling these requests, including maintenance plan provisions. This memorandum, therefore, consolidates the Environmental Protection Agency's (EPA's) guidance regarding the processing of requests for redesignation of nonattainment areas to attainment for ozone (O_3), carbon monoxide (CO), particulate matter (PM-10), sulfur dioxide (SO_2), nitrogen dioxide (NO_2), and lead (Pb). Regions should use this guidance as a general framework for drafting Federal Register notices pertaining to redesignation requests. Special concerns for areas seeking redesignation from unclassifiable to attainment will be addressed on a case-by-case basis.

Background

Section 107(d)(3)(E) of the Clean Air Act, as amended, states that an area can be redesignated to attainment if the following conditions are met:

1. The EPA has determined that the national ambient air quality standards (NAAQS) have been attained.

2. The applicable implementation plan has been fully approved by EPA under section 110(k).

3. The EPA has determined that the improvement in air quality is due to permanent and enforceable reductions in emissions.

4. The State has met all applicable requirements for the area under section 110 and Part D.

5. The EPA has fully approved a maintenance plan, including a contingency plan, for the area under section 175A.

Each of these criteria is discussed in more detail in the following paragraphs. Particular attention is given to maintenance plan provisions at the end of this document since maintenance plans constitute a new requirement under the amended Clean Air Act. Exceptions to the guidance will be considered on a case-by-case basis.

1. Attainment of the Standard

The State must show that the area is attaining the applicable NAAQS. There are two components involved in making this demonstration which should be considered interdependently. The first component relies upon ambient air quality data. The data that are used to demonstrate attainment should be the product of ambient monitoring that is representative of the area of highest concentration. These monitors should remain at the same location for the duration of the monitoring period required for demonstrating attainment. The data should be collected and quality-assured in accordance with 40 CFR 58 and recorded in the Aerometric Information Retrieval System (AIRS) in order for it to be available to the public for review. For purposes of redesignation, the Regional Office should verify that the integrity of the air quality monitoring network has been preserved.

For PM-10, an area may be considered attaining the NAAQS if the number of expected exceedances per year, according to 40 CFR 50.6, is less than or equal to 1.0. For O_3, the area must show that the average annual number of expected exceedances, according to 40 CFR 50.9, is less than or equal to 1.0 based on data from all monitoring sites in the area or its affected downwind environs. In making this showing, both PM-10 and O_3 must rely on 3 complete, consecutive calendar years of quality-assured air quality monitoring data, collected in accordance with 40 CFR 50, Appendices H and K. For CO, an area may be considered attaining the NAAQS if there are no violations, as determined in accordance

with 40 CFR 50.8, based on 2 complete, consecutive calendar years of quality-assured monitoring data. For SO_2, according to 40 CFR 50.4, an area must show no more than one exceedance annually and for Pb, according to section 50.12, an area may show no exceedances on a quarterly basis.

The second component relies upon supplemental EPA-approved air quality modeling. No such supplemental modeling is required for O_3 nonattainment areas seeking redesignation. Modeling may be necessary to determine the representativeness of the monitored data. For pollutants such as SO_2 and CO, a small number of monitors typically is not representative of areawide air quality or areas of highest concentration. When dealing with SO_2, Pb, PM-10 (except for a limited number of initial moderate nonattainment areas), and CO (except moderate areas with design values of 12.7 parts per million or lower at the time of passage of the Clean Air Act Amendments of 1990), dispersion modeling will generally be necessary to evaluate comprehensively sources' impacts and to determine the areas of expected high concentrations based upon current conditions. Areas which were designated nonattainment based on modeling will generally not be redesignated to attainment unless an acceptable modeling analysis indicates attainment. Regions should consult with OAQPS for further guidance addressing the need for modeling in specific circumstances.

2. State Implementation Plan (SIP) Approval

The SIP for the area must be fully approved under section 110(k),[1] and must satisfy all requirements that apply to the area. It should be noted that approval action on SIP elements and the redesignation request may occur simultaneously. An area cannot be redesignated if a required element of its plan is the subject of a disapproval; a finding of failure to submit or to implement the SIP; or partial, conditional, or limited approval. However, this does not mean that earlier issues with regard to the SIP will be reopened. Regions should not reconsider those things that have already been approved and for which the Clean Air Act Amendments did not alter what is required. In contrast, to the extent the Amendments add a requirement or alter an existing requirement so that it adds something more, Regions should consider those issues. In addition, requests from areas known to be affected by dispersion techniques which are inconsistent with EPA guidance will continue to be considered unapprovable under section 110 and will not qualify for redesignation.

---

[1]Section 110(k) contains the requirements for EPA action on plan submissions. It addresses completeness, deadlines, full and partial approval, conditional approval, and disapproval.

3. Permanent and Enforceable Improvement in Air Quality

The State must be able to reasonably attribute the improvement in air quality to emission reductions which are permanent and enforceable.[2] Attainment resulting from temporary reductions in emission rates (e.g., reduced production or shutdown due to temporary adverse economic conditions) or unusually favorable meteorology would not qualify as an air quality improvement due to permanent and enforceable emission reductions.

In making this showing, the State should estimate the percent reduction (from the year that was used to determine the design value for designation and classification) achieved from Federal measures such as the Federal Motor Vehicle Control Program and fuel volatility rules as well as control measures that have been adopted and implemented by the State. This estimate should consider emission rates, production capacities, and other related information to clearly show that the air quality improvements are the result of implemented controls. The analysis should assume that sources are operating at permitted levels (or historic peak levels) unless evidence is presented that such an assumption is unrealistic.

4. Section 110 and Part D Requirements

For the purposes of redesignation, a State must meet all requirements of section 110 and Part D that were applicable prior to submittal of the complete redesignation request. When evaluating a redesignation request, Regions should not consider whether the State has met requirements that come due under the Act after submittal of a complete redesignation request.[3]

---

[2]This is consistent with EPA's existing policy on redesignations as stated in an April 21, 1983 memorandum titled "Section 107 Designation Policy Summary." This memorandum states that in order for an area to be redesignated to attainment, the State must show that "actual enforceable emission reductions are responsible for the recent air quality improvement." This element of the policy retains its validity under the amended Act pursuant to section 193. [Note: other aspects of the April 21, 1983 memorandum have since been superseded by subsequent memorandums; interested parties should consult with OAQPS before relying on these aspects, e.g. those relating to required years of air quality data.]

[3]Under section 175A(c), however, the requirements of Part D remain in force and effect for the area until such time as it is redesignated. Upon redesignation to attainment, the requirements that became due under section 175A(c) after submittal of the complete redesignation request would no longer be applicable.

However, any requirements that came due prior to submittal of the redesignation request must be fully approved into the plan at or before the time EPA redesignates the area.

To avoid confusion concerning what requirements will be applicable for purposes of redesignation, Regions should encourage States to work closely with the appropriate Regional Office early in the process. This will help to ensure that a redesignation request submitted by the State has a high likelihood of being approved by EPA. Regions should advise States of the practical planning consequences if EPA disapproves the redesignation request or if the request is invalidated because of violations recorded during EPA's review. Under such circumstances, EPA does not have the discretion to adjust schedules for implementing SIP requirements. As a result, an area may risk sanctions and/or Federal implementation plan implementation that could result from failure to meet SIP submittal or implementation requirements.

a. Section 110 Requirements

Section 110(a)(2) contains general requirements for nonattainment plans. Most of the provisions of this section are the same as those contained in the pre-amended Act. We will provide guidance on these requirements as needed.[4]

b. Part D Requirements

Part D consists of general requirements applicable to all areas which are designated nonattainment based on a violation of the NAAQS. The general requirements are followed by a series of subparts specific to each pollutant. The general requirements appear in subpart 1. The requirements relating to O_3, CO, PM-10, SO_2, NO_2, and Pb appear in subparts 2 through 5. In those instances where an area is subject to both the general nonattainment provisions in subpart 1 as well as one of the pollutant-specific subparts, the general provisions may be subsumed within, or superseded by, the more specific requirements of subparts 2 through 5.

If an area was not classified under section 181 for O_3, or section 186 for CO, then that area is only subject to the provisions of subpart 1, "Nonattainment Areas in General." In addition to relevant provisions in subpart 1, an O_3 and CO area, which is classified, must meet all applicable requirements in subpart 2, "Additional Provisions for Ozone Nonattainment Areas," and subpart 3, "Additional Provisions for Carbon Monoxide

---

[4]General guidance regarding the requirements for SIP's may be found in the "General Preamble to Title I of the 1990 Clean Air Act Amendments," 57 FR 13498 (April 16, 1992).

Nonattainment Areas," respectively, before the area may be redesignated to attainment. All PM-10 nonattainment areas (whether classified as moderate or serious) must similarly meet the applicable general provisions of subpart 1 and the specific PM-10 provisions in subpart 4, "Additional Provisions for Particulate Matter Nonattainment Areas." Likewise, SO_2, NO_2, and Pb nonattainment areas are subject to the applicable general nonattainment provisions in subpart 1 as well as the more specific requirements in subpart 5, "Additional Provisions for Areas Designated Nonattainment for Sulfur Oxides, Nitrogen Dioxide, and Lead."

i. Section 172(c) Requirements

This section contains general requirements for nonattainment plans. A thorough discussion of these requirements may be found in the General Preamble to Title I [57 FR 13498 (April 16, 1992)]. The EPA anticipates that areas will already have met most or all of these requirements to the extent that they are not superseded by more specific Part D requirements. The requirements for reasonable further progress, identification of certain emissions increases, and other measures needed for attainment will not apply for redesignations because they only have meaning for areas not attaining the standard. The requirements for an emission inventory will be satisfied by the inventory requirements of the maintenance plan. The requirements of the Part D new source review program will be replaced by the prevention of significant deterioration (PSD) program once the area has been redesignated. However, in order to ensure that the PSD program will become fully effective immediately upon redesignation, either the State must be delegated the Federal PSD program or the State must make any needed modifications to its rules to have the approved PSD program apply to the affected area upon redesignation.

ii. Conformity

The State must work with EPA to show that its SIP provisions are consistent with section 176(c)(4) conformity requirements. The redesignation request should include conformity procedures, if the State already has these procedures in place. Additionally, we currently interpret the conformity requirement to apply to attainment areas. However, EPA has not yet issued its conformity regulations specifying what areas are subject to the conformity requirement. Therefore, if a State does not have conformity procedures in place at the time that it submits a redesignation request, the State must commit to follow EPA's conformity regulation upon issuance, as applicable. If the State submits the redesignation request subsequent to EPA's issuance of the conformity regulations, and the conformity requirement became applicable to the area prior to submission,

the State must adopt the applicable conformity requirements before EPA can redesignate the area.

5. Maintenance Plans

Section 107(d)(3)(E) of the amended Act stipulates that for an area to be redesignated, EPA must fully approve a maintenance plan which meets the requirements of section 175A. A State may submit both the redesignation request and the maintenance plan at the same time and rulemaking on both may proceed on a parallel track. Maintenance plans may, of course, be submitted and approved by EPA before a redesignation is requested. However, according to section 175A(c), pending approval of the maintenance plan and redesignation request, all applicable nonattainment area requirements shall remain in place.

Section 175A defines the general framework of a maintenance plan. The maintenance plan will constitute a SIP revision and must provide for maintenance of the relevant NAAQS in the area for at least 10 years after redesignation. Section 175A further states that the plan shall contain such additional measures, if any, as may be necessary to ensure such maintenance. Because the Act requires a demonstration of maintenance for 10 years after an area is redesignated (not 10 years after submittal of a redesignation request), the State should plan for some lead time for EPA action on the request. In other words, the maintenance demonstration should project maintenance for 10 years, beginning from a date which factors in the time necessary for EPA review and approval action on the redesignation request. *In determining* the amount of lead time to allow, States should consider that section 107(d)(3)(D) grants the Administrator up to 18 months from receipt of a complete submittal to process a redesignation request. The statute also requires the State to submit a revision of the SIP 8 years after the original redesignation request is approved to provide for maintenance of the NAAQS for an additional 10 years following the first 10-year period [see section 175A(b)].

In addition, the maintenance plan shall contain such contingency measures as the Administrator deems necessary to ensure prompt correction of any violation of the NAAQS [see section 175A(d)]. The Act provides that, at a minimum, the contingency measures must include a requirement that the State will implement all measures contained in the nonattainment SIP prior to redesignation. Failure to maintain the NAAQS and triggering of the contingency plan will not necessitate a revision of the SIP unless required by the Administrator, as stated in section 175A(d).

The following is a list of core provisions that we anticipate will be necessary to ensure maintenance of the relevant NAAQS in an area seeking redesignation from

nonattainment to attainment. We therefore recommend that States seeking redesignation of a nonattainment area consider these provisions. However, any final EPA determination regarding the adequacy of a maintenance plan will be made following review of the plan submittal in light of the particular circumstances facing the area proposed for redesignation and based on all relevant information available at the time.

a. Attainment Inventory

The State should develop an attainment emissions inventory to identify the level of emissions in the area which is sufficient to attain the NAAQS.[5] This inventory should be consistent with EPA's most recent guidance on emission inventories for nonattainment areas available at the time and should include the emissions during the time period associated with the monitoring data showing attainment.[6]

Source size thresholds are 100 tons/year for SO_2, NO_2, and PM-10 areas, and 5 tons/year for Pb based upon 40 CFR 51.100(k) and 51.322, as well as established practice for AIRS data. The source size threshold for serious PM-10 areas is 70 tons/year

---

[5]Where the State has made an adequate demonstration that air quality has improved as a result of the SIP (as discussed previously), the attainment inventory will generally be the actual inventory at the time the area attained the standard.

[6]The EPA's current guidance on the preparation of emission inventories for O_3 and CO nonattainment areas is contained in the following documents: "Procedures for the Preparation of Emission Inventories for Carbon Monoxide and Precursors of Ozone: Volume I" (EPA-450/4-91-016), "Procedures for the Preparation of Emission Inventories for Carbon Monoxide and Precursors of Ozone: Volume II" (EPA-450/4-91-014), "Emission Inventory Requirements for Ozone State Implementation Plans" (EPA-450/4-91-010), "Emission Inventory Requirements for Carbon Monoxide Implementation Plans" (EPA-450/4-91-011), "Guideline for Regulatory Application of the Urban Airshed Model" (EPA-450/4-91-013), "Procedures for Emission Inventory Preparation: Volume IV, Mobile Sources" (EPA-450/4-81-026d), and "Procedures for Preparing Emission Inventory Projections" (EPA-450/4-91-019). The EPA does not currently have specific guidance on attainment emissions inventories for SO_2. In lieu thereof, States are referred to the guidance on emissions data to be used as input to modeling demonstrations, contained in Table 9.1 of EPA's "Guideline on Air Quality Models (Revised)" (EPA-450/2-78-027R), July 1987, which is generally applicable to all criteria pollutants. Emission inventory procedures and requirements documents are currently being prepared by OAQPS for PM-10 and Pb; these documents are due for release by summer 1992.

according to Clean Air Act section 189(b)(3). However, the inventory should include sources below these size thresholds if these smaller sources were included in the SIP attainment demonstration. Where sources below the 100, 70, and 5 tons/year-size thresholds (e.g., areas with smaller source size definitions) are subject to a State's minor source permit program, these sources need only be addressed in the aggregate to the extent that they result in areawide growth.

For O_3 nonattainment areas, the inventory should be based on actual "typical summer day" emissions of O_3 precursors (volatile organic compounds and nitrogen oxides) during the attainment year. This will generally correspond to one of the periodic inventories required for nonattainment areas to reconcile milestones. For CO nonattainment areas, the inventory should be based on actual "typical CO season day" emissions for the attainment year. This will generally correspond to one of the periodic inventories required for nonattainment areas.

b. Maintenance Demonstration

A State may generally demonstrate maintenance of the NAAQS by either showing that future emissions of a pollutant or its precursors will not exceed the level of the attainment inventory, or by modeling to show that the future mix of sources and emission rates will not cause a violation of the NAAQS. Under the Clean Air Act, many areas are required to submit modeled attainment demonstrations to show that proposed reductions in emissions will be sufficient to attain the applicable NAAQS. For these areas, the maintenance demonstration should be based upon the same level of modeling. In areas where no such modeling was required, the State should be able to rely on the attainment inventory approach. In both instances, the demonstration should be for a period of 10 years following the redesignation.

Where modeling is relied upon to demonstrate maintenance, each plan should contain a summary of the air quality concentrations expected to result from application of the control strategy. In the process, the plan should identify and describe the dispersion model or other air quality model used to project ambient concentrations (see 40 CFR 51.46).

In either case, to satisfy the demonstration requirement the State should project emissions for the 10-year period following redesignation, either for the purpose of showing that emissions will not increase over the attainment inventory or for conducting modeling.[7] The projected inventory should consider future growth, including population and industry, should be consistent

---

[7]Guidance for projecting emissions may be found in the emissions inventory guidance cited in footnote 6.

with the attainment inventory, and should document data inputs and assumptions. All elements of the demonstration (e.g., emission projections, new source growth, and modeling) should be consistent with current EPA modeling guidance.[8] For O_3 and CO, the projected emissions should reflect the expected actual emissions based on enforceable emission rates and typical production rates.

For CO, a State should address the areawide component of the maintenance demonstration either by showing that future CO emissions will not increase or by conducting areawide modeling. Preferably, the State should carry out hot-spot modeling that is consistent with the Guideline on Air Quality Models (Revised), in order to demonstrate maintenance of the NAAQS. In particular, if the nonattainment problem is related to a pattern of hot-spots then hot-spot modeling should generally be conducted. However, hot-spot modeling is not automatically required. For example, if the nonattainment problem was related solely to stationary point sources, or if highway improvements have been implemented and the associated emission reductions and travel characteristics can be qualitatively documented, then hot-spot modeling is not required. In such cases, adequate documentation as well as the concurrence of Headquarters is needed.

Any assumptions concerning emission rates must reflect permanent, enforceable measures. In other words, a State generally cannot take credit in the maintenance demonstration for reductions unless there are regulations in place requiring those reductions or the reductions are otherwise shown to be permanent. Therefore, the State will be expected to maintain its implemented control strategy despite redesignation to attainment, unless such measures are shown to be unnecessary for maintenance or are replaced with measures that achieve equivalent reductions (see additional discussion under "Contingency Plan"). Emission reductions from source shutdowns can be considered permanent and enforceable to the extent that those shutdowns have been reflected in the SIP and all applicable permits have been modified accordingly.

Modeling used to demonstrate attainment may be relied upon in the maintenance demonstration where the modeling conforms to current EPA guidance and where the State has projected no significant changes in the modeling inputs during the intervening time. Where the original attainment demonstration may no longer be relied upon, States will be expected to remodel using current

---

[8]The EPA-approved modeling guidance may be found in the following documents: "Guideline on Air Quality Models (Revised)," OAQPS, RTP, NC (EPA-450/2-78-027R), July 1986; and "PM-10 SIP Development Guideline," OAQPS, RTP, NC (EPA-450/2-86-001), June 1987.

EPA referenced techniques.[9] This may be necessary where, for example, there has been a change in emissions or a change in the siting of new sources or modifications such that air quality may no longer be accurately represented by the existing modeling.

c. Monitoring Network

Once an area has been redesignated, the State should continue to operate an appropriate air quality monitoring network, in accordance with 40 CFR Part 58, to verify the attainment status of the area. The maintenance plan should contain provisions for continued operation of air quality monitors that will provide such verification. In cases where measured mobile source parameters (e.g., vehicle miles traveled congestion) have changed over time, the State may also need to perform a saturation monitoring study to determine the need for, and location of, additional permanent monitors.

d. Verification of Continued Attainment

Each State should ensure that it has the legal authority to implement and enforce all measures necessary to attain and to maintain the NAAQS. Sections 110(a)(2)(B) and (F) of the Clean Air Act, as amended, and regulations promulgated at 40 CFR 51.110(k), suggest that one such measure is the acquisition of ambient and source emission data to demonstrate attainment and maintenance.

Regardless of whether the maintenance demonstration is based on a showing that future emission inventories will not exceed the attainment inventory or on modeling, the State submittal should indicate how the State will track the progress of the maintenance plan. This is necessary due to the fact that the emission projections made for the maintenance demonstration depend on assumptions of point and area source growth.

One option for tracking the progress of the maintenance demonstration, provided here as an example, would be for the State to periodically update the emissions inventory. In this case, the maintenance plan should specify the frequency of any planned inventory updates. Such an update could be based, in part, on the annual AIRS update and could indicate new source growth and other changes from the attainment inventory (e.g., changes in vehicle miles travelled or in traffic patterns). As an alternative to a complete update of the inventory, the State may choose to do a comprehensive review of the factors that were used in developing the attainment inventory to show no significant change. If this review does show a significant change, the State should then perform an update of the inventory.

---

[9]See references for modeling guidance cited in footnote 8.

Where the demonstration is based on modeling, an option for tracking progress would be for the State to periodically (typically every 3 years) reevaluate the modeling assumptions and input data. In any event, the State should monitor the indicators for triggering contingency measures (as discussed below).

e. Contingency Plan

Section 175A of the Act also requires that a maintenance plan include contingency provisions, as necessary, to promptly correct any violation of the NAAQS that occurs after redesignation of the area. These contingency measures are distinguished from those generally required for nonattainment areas under section 172(c)(9) and those specifically required for O_3 and CO nonattainment areas under sections 182(c)(9) and 187(a)(3), respectively. For the purposes of section 175A, a State is not required to have fully adopted contingency measures that will take effect without further action by the State in order for the maintenance plan to be approved. However, the contingency plan is considered to be an enforceable part of the SIP and should ensure that the contingency measures are adopted expediently once they are triggered. The plan should clearly identify the measures to be adopted, a schedule and procedure for adoption and implementation, and a specific time limit for action by the State. As a necessary part of the plan, the State should also identify specific indicators, or triggers, which will be used to determine when the contingency measures need to be implemented.

Where the maintenance demonstration is based on the inventory, the State may, for example, identify an "action level" of emissions as the indicator. If later inventory updates show that the inventory has exceeded the action level, the State would take the necessary steps to implement the contingency measures. The indicators would allow a State to take early action to address potential violations of the NAAQS before they occur. By taking early action, States may be able to prevent any actual violations of the NAAQS and, therefore, eliminate the need on the part of EPA to redesignate an area to nonattainment.

Other indicators to consider include monitored or modeled violations of the NAAQS (due to the inadequacy of monitoring data in some situations). It is important to note that air quality data in excess of the NAAQS will not automatically necessitate a revision of the SIP where implementation of contingency measures is adequate to address the cause of the violation. The need for a SIP revision is subject to the Administrator's discretion.

The EPA will review what constitutes a contingency plan on a case-by-case basis. At a minimum, it must require that the State will implement all measures contained in the Part D nonattainment

plan for the area prior to redesignation [see section 175A(d)]. This language suggests that a State may submit a SIP revision at the time of its redesignation request to remove or reduce the stringency of control measures. Such a revision can be approved by EPA if it provides for compensating equivalent reductions. A demonstration that measures are equivalent would have to include appropriate modeling or an adequate justification. Alternatively, a State might be able to demonstrate (through EPA-approved modeling) that the measures are not necessary for maintenance of the standard. In either case, the contingency plan would have to provide for implementation of any measures that were reduced or removed after redesignation of the area.

Summary

As stated previously, this memorandum consolidates EPA's redesignation and maintenance plan guidance and Regions should rely upon it as a general framework in drafting Federal Register notices. It is strongly suggested that the Regional Offices share this document with the appropriate States. This should give the States a better understanding of what is expected from a redesignation request and maintenance plan under existing policy. Any necessary changes to existing Agency policy will be made through our action on specific redesignation requests and the review of section 175A maintenance plans for these particular areas, both of which are subject to notice and comment rulemaking procedures. Thus, in applying this memorandum to specific circumstances in a rulemaking, Regions should consider the applicability of the underlying policies to the particular facts and to comments submitted by any person. If your staff members have questions which require clarification, they may contact Sharon Reinders at (919) 541-5284 for O_3- and CO-related issues, and Eric Ginsburg at (919) 541-0877 for SO_2-, PM-10-, and Pb-related issues.

cc: Chief, Air Branch, Regions I-X
John Cabaniss, OMS
Denise Devoe, OAQPS
Bill Laxton, TSD
Rich Ossias, OGC
John Rasnic, SSCD
John Seitz, OAQPS
Mike Shapiro, OAR
Lydia Wegman, OAQPS

APPENDIX B

COMPENDIUM OF INFORMATION SOURCES ON PM-10 POLICY AND GUIDANCE

User note: Appendix B contains a compendium of sources of information on PM-10 policy and guidance. It consists of a list of PM-10 policy and guidance and a table indicating what subjects the policy and guidance covers. The list includes items that are not specifically referenced in the chapters of the guideline. These materials are intended to supplement the materials referenced in the guideline with additional information as needed. The table indicates which policy and guidance items are referenced in the guideline document and which are not.

April 1993

PM-10 POLICY AND GUIDANCE

1. Memorandum. James, M.A., Attorney, Air Quality and Radiation Division, Office of the General Counsel, U.S. EPA, to Conrad Simon, Chief, Air Programs Branch, Region II, U.S. EPA. *Attainment of National Standards in Open Air Parking Lots.* September 27, 1972.

2. Memorandum. Wilson, R.D., Director, Division of Stationary Source Enforcement, U.S. EPA, to Enforcement Division Directors, Regions I-X. *Non-Discretionary Enforcement Duties - Issuance of Notices of Violation.* November 5, 1975. PN-113-75-11-05-001. Federal Enforcement.

3. U.S. Environmental Protection Agency. *Quality Assurance Handbook for Air Pollution Measurement Systems, Volume I - Principles.* EPA-600/9-76-005. Washington, DC. September 1976

4. Memorandum. Wilson, R.D., Director, Division of Stationary Source Enforcement, U.S. EPA, to Enforcement Division Directors, Regions I-X, U.S. EPA. *Enforcement of NSPS Requirements.* May 3, 1976. PN-111(e)-76-05-03-001. New Source Performance Standards Enforcement.

5. Memorandum. Legro, S.W., Office of Enforcement, U.S. EPA, to Regional Administrators, Regions I-X, U.S. EPA. *Documentation of Violation Extending 30 Days Beyond Notice of Violation Under Section 113 of the Clean Air Act.* June 25, 1976. PN-113-76-06-25-002. Federal Enforcement.

6. Memorandum. Legro, S.W., Office of Enforcement, U.S. EPA, to Enforcement Division Directors, Regions I-X, U.S. EPA. *Enforcement of SIP's Undergoing Revision.* August 12, 1976. PN-113-76-08-12-003. Federal Enforcement.

7. Memorandum. Legro, S.W., Office of Enforcement, U.S. EPA, to Enforcement Division Directors, Regions I-X, U.S. EPA. *"Reviewability" of EPA Determinations in SIP Enforcement Actions.* August 13, 1976. PN-113-76-08-13-004. Federal Enforcement.

8. U.S. Environmental Protection Agency. *Quality Assurance Handbook for Air Pollution Measurement Systems, Volume II - Ambient Air Specific Methods.* EPA-600/4-77-027a. Washington, DC. April 1977.

9. Memorandum. Reich, E.E., Director, Division of Stationary Source Enforcement, U.S. EPA, to Enforcement Division Directors, Regions I-X and others, U.S. EPA. *Guidance for Section 114(d) of the CAA.* December 2, 1977. PN-114-77-12-02-001A. Inspection, Monitoring, and Entry.

10. Memorandum. Barber, W.C., Director, Office of Air Quality Planning and Standards, U.S. EPA, to D.G. Hawkins, Assistant Administrator, Air and Waste Management, U.S. EPA. *Accounting for Pollution Across International Boundaries.* January 31, 1978. PN-115-78-01-31-001. International Air Pollution.

11. Memorandum. The Administrator, Office of Air and Waste Management, U.S. EPA, to Regional Administrators, Regions I-X, U.S. EPA. *Criteria for Approval of 1979 SIP Revisions.* February 24, 1978. PN-110-78-02-24-002. Implementation Plans.

12. Memorandum. Rhoads, Director, Control Programs Development Division, U.S. EPA, to Directors, Air and Hazardous Materials Division, Regions I, III-X, and Environmental Programs Division, Region II, U.S. EPA. *Out-of-State Sources Effect on Implementation Plan Revision.* March 3, 1978. PN-126-78-03-16-001. Interstate Pollution Abatement.

13. Memorandum. Hawkins, D.G., Assistant Administrator, Office of Air, Noise, and Radiation, U.S. EPA, to Harrison, A., Regional Administrator, Region VI, U.S. EPA. *International Pollution (El Paso/Juarez).* March 20, 1978. PN-115-78-03-20-002. International Air Pollution.

14. Memorandum. Durning, M.B., Assistant Administrator, Office of Enforcement, U.S. EPA, to Regional Administrators and Regional Enforcement Directors. *Enforcement Under Clean Air Act Amendments - Orders Under Section 113(a) and 113(d).* July 27, 1978. PN-113-78-07-27-005. Federal Enforcement.

15. Memorandum. Barber, W.C., Director, Office of Air Quality Planning and Standards, U.S. EPA, to Directors, Air and Hazardous Materials Division, Regions I, III-X, and Environmental Programs Division, Region II. U.S. EPA *Implementing Section 124 of the Clean Air Act.* July 31, 1978. PN-124-78-07-31-001. Assurance of Adequacy of State Plans.

16. Memorandum. Barber, W.C., Director, Office of Air Quality Planning and Standards, U.S. EPA, to Director, Air and Hazardous Materials Division, Regions I-X, U.S. EPA. *BACT Information for Coal-Fired Power Plants.* December 22, 1978. PN-165-78-12-22-001. Preconstruction Requirements.

17. 44 Federal Register 20,372-80, (April 4, 1979), State Implementation Plans; General Preamble for Proposed Rulemaking on Approval of Plan Revisions for Nonattainment Areas. PN-110-79-04-04-015. Implementation Plans.

18. 44 Federal Register 35,176, (June 18, 1979), Requirements for Preparation, Adoption, and Submittal of Implementation Plans. PN-110-79-06-18-066. Implementation Plans.

19. 44 Federal Register (July 2, 1979) State Implementation Plans; General Preamble for Proposed Rulemaking on Approval of Plan Revisions for Nonattainment Areas - Supplement (on Public Comment and Conditional Approval). PN-110-79-07-02-017. Implementation Plans.

20. 44 Federal Register 53,761, (September 17, 1979), State Implementation Plans; General Preamble for Proposed Rulemaking on Approval of Plan Revisions for Nonattainment Areas - Supplement (on Control Techniques Guidelines). PN-110-79-09-17-020. Implementation Plans.

21. Memorandum. Miller, J.G., Acting Assistant Administrator, Office of Enforcement; and Hawkins, D.G., Assistant Administrator, Office of Air, Noise and Radiation, U.S. EPA, to Regional Administrators, Regions I-X, U.S. EPA. *Alternate Procedure for Section 110(f) Relief in Localized, Short Term Energy Emergencies.* January 10, 1980. PN-110-80-01-10-023A. Implementation Plans.

22. Memorandum. Hawkins, D.G., Assistant Administrator, Office of Air, Noise and Radiation, U.S. EPA, to Regional Administrators, Regions I-X, U.S. EPA. *Emission Offset Requirements in Secondary Standard Total Suspended Particulate Plans.* March 10, 1980. PN-110-80-03-10-030. Implementation Plans.

23. Memorandum. Wilson, R.D., Deputy Assistant Administrator, Office of Enforcement, U.S. EPA, to Enforcement Division Directors, Regions I-X, U.S. EPA. *Interim Particulate Controls.* March 11, 1980. PN-113-80-03-11-006. Federal Enforcement.

24. Memorandum. Rhoads, R.G., Office of Air Quality Planning and Standards, U.S. EPA, to Directors, Air and Hazardous Materials Division, Regions I-V and VIII, U.S. EPA. *Information Required in Federal Register Packages.* June 12, 1980.

25. Memorandum. Wilson, R.D., Deputy Assistant Administrator, Office of Enforcement, U.S. EPA, to Enforcement Division Directors, Regions I-X, U.S. EPA. *Delayed Compliance Orders Requiring SIP Compliance Through Temporary Control Measures - Amended Guidance.* May 27, 1980. PN-113-80-05-27-007. Federal Enforcement.

26. Memorandum. Reich, E.E., Director, Division of Stationary Source Enforcement, U.S. EPA, to Enforcement Division Directors, Regions I-X, U.S. EPA. *Priorities for Issuing Notices of Noncompliance.* September 12, 1980. PN-120-80-09-12-001. Noncompliance Penalty.

27. Memorandum. Rhoads, R.G., Director, Control Programs Development Division, Office of Air Quality Planning and Standards, U.S. EPA, to Director, Air and Hazardous Materials Division, Regions I-X, U.S. EPA. *Growth Restrictions in Secondary NAAQS.* October 23, 1980. PN-110-80-10-23-044. Implementation Plans.

28. U.S. Environmental Protection Agency. *Workbook for Estimating Visibility Impairment.* EPA-450/4-87-031. Office of Air Quality Planning and Standards. Research Triangle Park, NC. November 1980.

29. Memorandum. Rhoads, R.G., Director, Control Programs Development Division, Office of Air Quality Planning and Standards, U.S. EPA, to Alexandra Smith, Director, Air and Hazardous Materials Division, Region X, U.S. EPA. *Interpretation of "Significant Contribution".* December 16, 1980. PN-165-80-12-16-007. Preconstruction Requirements.

30. Letter. Costle, D.M., U.S. EPA, to J. Randolph, Chairman, Committee on Environment and Public Works, U.S. Senate, Washington, DC. *Reply to letter of October 23, expressing continued interest in the Agency's definition of "ambient air."* December 19, 1980. PN-123-80-12-19-001. Stack Heights.

31. Memorandum. Barber, W.C., Acting Administrator, Office of Air Quality Planning and Standards, U.S. EPA, to Regional Administrators, Regions I-X, U.S. EPA. *Implementation of Noncompliance Penalty Program Under Section 120 of the Clean Air Act.* February 12, 1981. PN-120-81-02-12-003. Noncompliance Penalty.

32. U.S. Environmental Protection Agency. *Receptor Model Technical Series, Volume I: Overview of Receptor Model Application to Particulate Source Apportionment.* EPA-450/4-81-016a. Washington, DC. April 1981.

33. U.S. Environmental Protection Agency. *Receptor Model Technical Series, Volume II: Chemical Mass Balance.* EPA-450/4-81-016b. April 1981.

34. Memorandum. Wilson, R.D., Acting Assistant Administrator, Office of Enforcement, U.S. EPA, to Regional Administrators, Enforcement Division Directors, Regions I-X, U.S. EPA. *Settlement of Noncompliance Penalty Assessments Under Section 120 of the Clean Air Act, as Amended (the Act).* April 2, 1981. PN-120-81-04-02-004. Noncompliance Penalty.

35. Letter. Tuerk, E.F., Acting Assistant Administrator, Office of Air, Noise and Radiation, U.S. EPA, to R.E. Dickenson, Director, National Park Service, U.S. Department of Interior, Washington, D.C. *Response to letter of February 26, 1981 outlining concerns over the limited time that the National Park Service has to review prevention of significant deterioration permit applications for facilities which may impact Class I areas.* April 3, 1981. PN-165-81-04-03-006. Preconstruction Requirements.

36. Memorandum. Reich, E.E., Director, Division of Stationary Source Enforcement, U.S. EPA, to S.S. Gardebring, Director, Enforcement Division, Region V, U.S. EPA. *Issuance of Notices of Noncompliance Under Section 120 of the Clean Air Act to Seasonal Sources.* April 30, 1981. PN-120-81-04-30-005. Noncompliance Penalty.

37. Memorandum. Reich, E.E., Director, Division of Stationary Source Enforcement, U.S. EPA, to Enforcement Division Directors, Regions I-X, and others, U.S. EPA. *Regional Office Criteria for Neutral Inspections of Stationary Sources - Amended Guidance.* May 13, 1981. PN-114-81-05-13-002. Inspections, Monitoring, and Entry.

38. U.S. Environmental Protection Agency. *Guideline for Use of Fluid Modeling to Determine Good Engineering Stack Height.* EPA-450/4-81-003. Office of Air Quality Planning and Standards. Research Triangle Park, NC. July 1981

39. U.S. Environmental Protection Agency. *Receptor Model Technical Series - Volume I: Overview of Receptor Model Application to Particulate Source Apportionment.* EPA-450/4-81-016a. Office of Air Quality Planning and Standards. Research Triangle Park, NC. July 1981.

40. U.S. Environmental Protection Agency. *Receptor Model Technical Series - Volume II: Chemical Mass Balance.* EPA-450/4-81-016b. Office of Air Quality Planning and Standards. Research Triangle Park, NC. July 1981.

41. U.S. Environmental Protection Agency. *Guideline for Fluid Modeling of Atmospheric Diffusion.* EPA-600/8-81-009. Environmental Science Research Laboratory. August 1981.

42. U.S. Environmental Protection Agency. *Procedures for Emission Inventory Preparation - Volume I: Emission Inventory Fundamentals.* EPA-450/4-81-026a. Research Triangle Park, NC. September 1981.

43. U.S. Environmental Protection Agency. *Procedures for Emission Inventory Preparation - Volume II: Point Sources.* EPA-450/4-81-026b. Research Triangle Park, NC. September 1981.

44. U.S. Environmental Protection Agency. *Procedures for Emission Inventory Preparation - Volume III: Area Sources.* EPA-450/4-81-026c. Research Triangle Park, NC. September 1981.

45. U.S. Environmental Protection Agency. *Procedures for Emission Inventory Preparation - Volume V: Bibliography.* EPA-450/4-81-026c. Research Triangle Park, NC. September 1981.

46. 47 Federal Register 5,865, (February 8, 1982).

47. Memorandum. Bennett, K.M., Assistant Administrator, Office of Air, Noise and Radiation, U.S. EPA, to Regional Administrators, Regions I-X, U.S. EPA. *Guidance on Policy for Enforcement of VE Violations Against Sources Which are Meeting an Applicable Mass Emission Standard.* May 4, 1982. PN-113-82-05-04-013. Federal Enforcement.

48. Memorandum. Bennett, K.M., Assistant Administrator, Office of Air, Noise and Radiation, U.S. EPA, to Directors, Air and Waste Management Divisions, Regions I-IV, VI-VIII, X; and to Directors, Air Management Divisions, Regions V and IX, U.S.EPA. *Restatement of Guidance on Emissions Associated with Soot-Blowing.* May 7, 1982. PN-111(e)-82-05-07-002. New Source Performance Standards Enforcement.

49. Memorandum from Bennett, K.M., Assistant Administrator, Office of Air, Noise, and Radition, U.S. EPA, to Directors, Air and Waste Management Divisions and Air Management Divisions, Regions I - X, U.S. EPA. *Definition of "Continuous Compliance and Enforcement of O&M Violations."* June 21, 1982.

50. Memorandum. Bennett, K.M., Assistant Administrator, Office of Air, Noise and Radiation, U.S. EPA, to Directors, Air and Waste Management Divisions, Regions II-IV, VI-VIII, and X, and Directors, Air Management Divisions, Regions I, V, and IX, U.S. EPA. *Guidance Concerning EPA's Use of Continuous Emission Monitoring Data.* August 12, 1982. PN-113-82-08-12-014. Federal Enforcement.

51. U.S. Environmental Protection Agency. *Control Techniques for Particulate Emissions from Stationary Sources - Volume I.* EPA 450/3-81-005a. Research Triangle Park, NC. September 1982.

52. U.S. Environmental Protection Agency. *Control Techniques for Particulate Emissions from Stationary Sources - Volume II.* EPA 450/3-81-005b. Research Triangle Park, NC. September 1982.

53. Memorandum. Meyers, S., Director, Office of Air Quality Planning and Standards, U.S. EPA, to D. Kee, Director, Air Management Division, Region V, U.S. EPA. *Milwaukee SO_2 Nonattainment Designation.* September 16, 1982. PN-107-82-09-16-007. Area Designations.

54. Memorandum from Bennett, K.M., Assistant Administrator, Office of Air, Noise, and Radiation, U.S. EPA, to Regional Administrators, Regions I - X, U.S. EPA. *Policy on Excess Emissions During Startup, Shutdown, Maintenance, and Malfunctions.* September 28, 1982. (PN 113-83-02-15-017).

55. Memorandum. Meyers, S., Director, Office of Air Quality Planning and Standards, U.S. EPA, to D. Kee, Director, Air Management Division, Region V, U.S. EPA. *SIP Actions and Toxic Pollutants*. November 24, 1982. PN-110-82-11-24-061. Implementation Plans.

56. U.S. Environmental Protection Agency. *Quality Assurance Handbook for Air Pollution Measurement Systems: Volume IV. Meteorological Measurements*. EPA-600/4-82-060. Environmental Monitoring Systems Laboratory. Research Triangle Park, NC. February 1983

57. Memorandum. Bennett, K.M., Assistant Administrator, Office of Air, Noise and Radiation, U.S. EPA, to Regional Administrators, Regions I-X, U.S. EPA. *Policy on Excess Emissions During Startup, Shutdown, Maintenance, and Malfunctions.* February 15, 1983. PN-113-83-02-15-017. Federal Enforcement.

58. Letter. Bennett, K.M., Assistant Administrator, Office of Air, Noise, and Radiation, U.S. EPA, to H.H. Hovey, Jr. P.E., Director, Division of Air, New York State Department of Environmental Conservation. *Response to letter on January 11, regarding EPA policy with regard to ambient air and the associated requirements of a SIP demonstration.* March 18, 1983. PN-110-83-03-18-063. Implementation Plans.

59. U.S. Environmental Protection Agency. *Determination of Good Engineering Practice Stack Height - A Fluid Model Demonstration Study for a Power Plant.* EPA-600/3-83-024. Environmental Science Research Laboratory. April 1983

60. U.S. Environmental Protection Agency. *Receptor Model Technical Series, Volume III: Users Manual for Chemical Mass Balance Model.* EPA-450/4-83-014. April 1983

61. U.S. Environmental Protection Agency. *Receptor Model Technical Series, Volume IV: Summary of Particle Identification Techniques.* EPA-450/4-83-018. April 1983

62. Letter. Bennett, K.M., Assistant Administrator, Office of Air, Noise, and Radiation, U.S. EPA, to R.R. Wahler, President, WAHLCO, Inc., Santa Ana, CA. *Response to letter on February 22, requesting that EPA reviews its policy on March 1980, entitled "Enforcement Policy on Interim Particulate Controls".* April 12, 1983. PN-113-83-04-12-019. Federal Enforcement.

63. Memorandum. Meyers, S., Director, Office of Air Quality Planning and Standards, U.S. EPA, to Director, Air and Waste Management Division Regions II-IV, VI-VIII, X; and Director, Air Management Division Regions I, V, IX, U.S. EPA. *Section 107 Designation Policy Summary*. April 21, 1983. PN-107-83-04-21-008. Area Designations.

64. Memorandum. Bennett, K.M., Assistant Administrator for Air, Noise and Radiation; and Price, C.M., Acting Associate Administrator and General Counsel, U.S. EPA, to Regional Administrators, Regions I-X; and Regional Counsels, Regions I-X, U.S. EPA. *Procedures for Review of Federal Register Publications of Delayed Compliance Orders Under Section 113(d) of the Clean Air Act.* April 26, 1983. PN-113-83-04-26-020. Federal Enforcement.

65. Memorandum from Tyler, D.D., Office of Air Quality Planning and Standards, to A. Davis, Region VI, U.S. EPA. *Definition of Ambient Air for Lead.* May 26, 1983. PN-110-83-05-26-068. Implementation Plans.

66. Memorandum. Richard G. Rhoads, Director, Monitoring and Data Analysis Division, Office of Air Quality Planning and Standards, U.S. EPA, Research Triangle Park, NC, to Gary L. O'Neal, Director, Environmental Services Division, Region X. *Summary of NAAQS Interpretation.* May 27, 1983. PN-110-83-05-27-064. Implementation Plans.

67. Memorandum. Alushin, M.S., Associate Enforcement Counsel for Air; and Reich, E.E., Director, Stationary Source Compliance Division, U.S. EPA, to Regional Counsels, Regions I-X, and others, U.S. EPA. *Guidance on Enforcement of Prevention of Significant Deterioration Requirements Under the Clean Air Act.* December 14, 1983. PN-167-83-12-14-001. PSD Enforcement.

68. Memorandum. Cannon, J.A., Assistant Administrator for Air and Radiation, Office of Air, Noise, and Radiation, U.S. EPA, to Office Directors and Regional Administrators, U.S. EPA. *Execution of Confidentiality Agreements Under Section 114 of the Clean Air Act.* December 15, 1983. PN-114-83-12-15-003. Inspections, Monitoring, and Entry.

69. Memorandum from Helms, G.T., Chief, Office of Air Quality Planning and Standards, U.S. EPA, to Air Branch Chiefs, Regions I-X, U.S. EPA. *Section 107 Questions and Answers.* December 23, 1983.

70. Memorandum. Cannon, J.A., Assistant Administrator for Air and Radiation, Office of Air, Noise, and Radiation, U.S. EPA, to D. Hawekamp, Air Division Director, Region IX, U.S. EPA. *Interpretation of the Policy on Compliance with the Statutory Provisions of Part D.* January 9, 1984. PN-165-84-01-09-012. Preconstruction Requirements.

71. Memorandum. O'Connor, J.R., Acting Director, Office of Air Quality Planning and Standards, U.S. EPA, to T.W. Devine, Director, Air and Waste Management Division, Region IV, U.S. EPA. *PSD Increment Consumption Calculations.* January 20, 1984. PN-165-84-01-20-013. Preconstruction Requirements.

72. U.S. Environmental Protection Agency. *Receptor Model Technical Series, Volume V: Source Apportionment Techniques and Considerations for Combining Their Use.* EPA-450/4-84-020. April 1984

73. U.S. Environmental Protection Agency. *Receptor Model Technical Series - Volume IV: Summary of Particle Identification Techniques*. EPA-450/4-83-018. Office of Air Quality Planning and Standards. Research Triangle Park, NC. June 1983.

74. Memorandum. Cannon, J.A., Assistant Administrator for Air and Radiation, Office of Air, Noise, and Radiation, U.S. EPA, to C. Jeter, Regional Administrator, Region IV, U.S. EPA. *Applicability of PSD Increments to Building Rooftops*. June 11, 1984. PN-165-84-06-11-014. Preconstruction Requirements.

75. U.S. Environmental Protection Agency. *Receptor Model Technical Series - Volume V: Source Apportionment Techniques and Considerations for Combining Their Use*. EPA-450/4-84-020. Office of Air Quality Planning and Standards. Research Triangle Park, NC. July 1984

76. U.S. Environmental Protection Agency. *Interim Procedures for Evaluating Air Quality Models (Revised)*. EPA-450/4-84-023. Office of Air Quality Planning and Standards. Research Triangle Park, NC. September 1984

77. Memorandum. Reich, E.E., Director, Stationary Source Compliance Division, Office of Air Quality Planning and Standards, U.S. EPA, to Air and Waste Management Division Directors, Regions II, IV, VI-VIII, and X; and Air Management Division Directors, Regions I, III, V, and IX, U.S. EPA. *Final Guidance on Use of Unannounced Inspections*. September 6, 1984. PN-114-84-09-06-004. Inspections, Monitoring, and Entry.

78. Memorandum. Reich, E.E., Director, Stationary Source Compliance Division, Office of Air Quality Planning and Standards, U.S. EPA, to Directors, Air and Waste Management Division, Regions II, IV, VI-VIII, and X, and to Directors, Air Management Division, Regions I, III, V, and IX. U.S. EPA. *Final Technical Guidance on the Review and Use of Excess Emission Reports*. October 5, 1984. PN-113-84-10-05-021. Federal Enforcement.

79. Memorandum. Rasnic, J.B., Chief, Compliance Monitoring Branch, Stationary Source Compliance Division, Office of Air Quality Planning and Standards, U.S. EPA, to Air Program Branch Chiefs, Regions I-X; and Air Compliance Branch Chiefs, Regions II, III, V, VII, IX, U.S. EPA. *Policy on Non-Action Assurances*. December 20, 1984. PN-113-84-12-20-022. Federal Enforcement.

80. Memorandum. Tikvart, J.A., Chief, Source Receptor Analysis Branch, Office of Air Quality Planning and Standards, U.S. EPA, to Regional Modeling Contact, Regions I-X, U.S. EPA. *Regional Implementation of Modeling Guidance*. January 2, 1985. PN-110-85-01-02-070. Implementation Plans.

81. U.S. Environmental Protection Agency. *User's Guide: Fugitive Dust Control Demonstration Studies*. EPA-600/8-84-032. Center for Environmental Research Information. Cincinnati, OH. January 1985

82. U.S. Environmental Protection Agency. *Guideline for PM-10 Episode Monitoring Methods*. EPA-450/4-83-005. February 1985

83. Memorandum from Tyler, D.D., Director, Control Development Programs Division, Office of Air Quality Planning and Standards; and Wycoff, P.H., Assistant General Counsel, Air and Radiation Division, U.S. EPA, to Air Division Directors, Regions I-X, U.S. EPA. *Redesignations That Would Change the SIP*. February 2, 1985

84. Memorandum. Price, C.M., Assistant Administrator for Enforcement and Compliance Monitoring; and Elkins, C., Acting Assistant Administrator for Air and Radiation, U.S. EPA, to Regional Administrators and Regional Counsels, Regions I-X, U.S. EPA. *Permissible Grounds for Settlement of Noncompliance Penalties Under Section 120 of the Clean Air Act*. March 19, 1985. PN-120-85-03-19-006. Noncompliance Penalty.

85. Memorandum. Price, C.M., Assistant Administrator for Enforcement and Compliance Monitoring; and Elkins, C., Acting Assistant Administrator for Air and Radiation, U.S. EPA, to Regional Administrators and Regional Counsels, Regions I-X, U.S. EPA. *Guidance Concerning Implementation of Section 120 of the Clean Air Act in Fiscal Year 1985*. March 19, 1985. PN-120-85-03-19-007. Noncompliance Penalty.

86. U.S. Environmental Protection Agency. *Fluid Modeling Demonstration of Good Engineering Practice Stack Height in Complex Terrain*. EPA-600/3-85-022. Atmospheric Sciences Research Laboratory. April 1985

87. U.S. Environmental Protection Agency. *Receptor Model Technical Series, Volume VI: A Guide to the Use of Factor Analysis and Multiple Regression Techniques in Source Apportionment*. EPA-450/4-85-007. April 1985

88. Memorandum. Tyler, D.D., Director, Control Programs Development Division, Office of Air Quality Planning and Standards, U.S. EPA, to Director, Air Division, Regions I-X, U.S. EPA. *Improved New Source Review/prevention of Significant Deterioration (NSR/PSD) Program Transfer*. May 9, 1985. PN-165-85-05-09-015. Preconstruction Requirements.

89. Memorandum. Koerber, M., Region V, to J.A. Tikvart, Office of Air Quality Planning and Standards. *Ambient Air*. May 16, 1985

90. U.S. Environmental Protection Agency. *Guideline for Determination of Good Engineering Practice Stack Height (Technical Support Document for the Stack Height Regulations) (Revised)*. EPA-450/4-80-023R. Research Triangle Park, NC. June 1985

91. U.S. Environmental Protection Agency. *Receptor Model Technical Series - Volume VI: A Guide to the Use of Factor Analysis and Multiple Regression (FA/MR) Techniques in Source Apportionment.* EPA-450/4-85-007. Office of Air Quality Planning and Standards. Research Triangle Park, NC. June 1985

92. Memorandum. Elkins, C.L., Acting Assistant Administrator, Office of Air and Radiation, U.S. EPA, to Air and Waste Management Division Directors, Regions II and VI; and others, U.S. EPA. *Particulate Matter Interim Enforcement Policy.* June 28, 1985. PN-113-85-10-30-024. Federal Enforcement.

93. U.S. Environmental Protection Agency. *Interim Procedures for Evaluating Air Quality Models: Experience with Implementation.* EPA-450/4-85-006. Office of Air Quality Planning and Standards. Research Triangle Park, NC. July 1985

94. 50 Federal Register 27,892-907, (July 8, 1985), Stack Height Regulation.

95. Memorandum. Tikvart, J.A., Chief, Source Receptor Analysis Branch, Office of Air Quality Planning and Standards, U.S. EPA, to D. Stonefield, Chief, Policy Development Section, U.S. EPA. *Guidance on Fluid Model Demonstrations for Determining GEP Stack Height in Complex Terrain.* September 19, 1985. PN-123-85-09-19-006. Stack Heights.

96. U.S. Environmental Protection Agency. *Workshop on Implementing the Stack Height Regulations (Revised).* Control Programs Development Division. Office of Air Quality Planning and Standards. Research Triangle Park, NC. October 1985

97. Memorandum. Tyler, D.D., Director, Control Programs Development Division, Office of Air Quality Planning and Standards, U.S. EPA, to Director, Air Division, Regions I-X, U.S. EPA. *Ozone Air Quality Data for Redesignations.* October 8, 1985. PN-107-85-10-08-010. Area Designations.

98. Memorandum. Helms, G.T., Chief, Control Programs Operations Branch, Office of Air Quality Planning and Standards, U.S. EPA, to Chief, Air Branch, Regions I-X, U.S. EPA. *Questions and Answers on Implementing the Revised Stack Height Regulation.* October 10, 1985. PN-123-85-10-10-007. Stack Heights.

99. Memorandum. Tyler, D.D., Director, Control Programs Development Division, Office of Air Quality Planning and Standards, U.S. EPA, to Director, Air Division, Regions I-X, U.S. EPA. *Implementation of Stack Height Regulations - Exceptions from Restrictions on Credit for Merged Stacks.* October 28, 1985. PN-123-85-10-28-008. Stack Heights.

100. Memorandum. Tyler, D.D., Director, Control Programs Development Division, Office of Air Quality Planning and Standards, U.S. EPA, to Director, Air Management Division, Regions I-X, U.S. EPA. *Implementation of Stack Height Regulations - Presumptive NSPS Emission Limit for Fluid Modeling Stacks Above Formula GEP Height.* October 28, 1985. PN-123-85-10-28-009. Stack Heights.

101. Memorandum. Tyler, D.D., Director, Control Programs Development Division, Office of Air Quality Planning and Standards, U.S. EPA, to Director, Air Management Division, Regions I-X. *Determining Stack Heights "In Existence" Before December 31, 1970.* October 28, 1985. PN-123-85-10-28-010. Stack Heights.

102. Letter. Emison, G.A., Director, Office of Air Quality Planning and Standards, U.S. EPA, to W.F. O'Keefe, American Petroleum Institute. January 22, 1986

103. Memorandum. Tyler, D.D., Director, Control Programs Development Division, Office of Air Quality Planning and Standards, U.S. EPA, to Director, Air Management Division, Regions I-X, U.S. EPA. *Priority for Review of Particulate Matter Sources for Compliance With Revised Stack Height Regulations.* February 11, 1986. PN-123-86-02-11-011. Stack Heights.

104. Memorandum. Tyler, D.D., Director, Control Programs Development Division, Office of Air Quality Planning and Standards, U.S. EPA, to Director, Air Division, Regions I-X, U.S. EPA. *Clarification of Existing Guidance on Dispersion Modeling Requirements for Plants With "Tall Stacks" and Other Prohibited Dispersion Techniques.* February 11, 1986. PN-123-86-02-11-012. Stack Heights.

105. Memorandum. Potter, J.C., Assistant Administrator, Office of Air and Radiation, U.S. EPA, to Regional Administrators, Regions I-X, U.S. EPA. *Timely and Appropriate Enforcement Response Guidance.* April 11, 1986. PN-113-86-04-11-028. Federal Enforcement.

106. Memorandum. Potter, J.C., Assistant Administrator, Office of Air and Radiation, U.S. EPA, to Regional Administrators, Regions I-X, U.S. EPA. *Guidance on Federally-Reportable Violations for Stationary Air Sources.* April 11, 1986. PN-113-86-04-11-029. Federal Enforcement.

107. Memorandum. Reich, E.E., Director, Stationary Source Compliance Division, Office of Air Quality Planning and Standards; and Michael S. Alushin, Associate Enforcement Counsel, Air Enforcement Division, U.S. EPA, to Regional Counsels, Regions I-X, U.S. EPA. *Transmittal of National Program Guidance - Enforcement Applications of Continuous Emission Monitoring System Data.* April 22, 1986. PN-113-86-04-22-030. Federal Enforcement.

108. U.S. Environmental Protection Agency. *Guideline on Air Quality Models (Revised).* EPA-450-2-78-027R. Office of Air Quality Planning and Standards. Research Triangle Park, NC. July 1986

109. U.S. Environmental Protection Agency. *Guideline on the Identification and Use of Air Quality Data Affected by Exceptional Events.* EPA-450/4-86-007. July 1986

110. Memorandum. Emison, G.A., Director, Office of Air Quality Planning and Standards, U.S. EPA, to Director, Air Management Division, Regions I, III, V, and IX; and others, U.S. EPA. *Prevention of Significant Deterioration (PSD) Definition of "Modification."* July 7, 1986. PN-165-86-07-07-024. Preconstruction Requirements.

111. Memorandum. Rasnic, J.B., Chief, Compliance Monitoring Branch, Stationary Source Compliance Division, Office of Air Quality Planning and Standards, U.S. EPA, to Air Program Branch Chiefs, Regions I, VI, VIII, X; and Air Compliance Branch Chiefs, Regions II-VI, IX, U.S. EPA. *Sample Federal Register Language for Proposal and Final DCOs.* August 22, 1986. PN-113-86-08-22-033. Federal Enforcement.

112. U.S. Environmental Protection Agency. *Identification, Assessment, and Control of Fugitive Particulate Emissions.* EPA-600/8-86-023. Air and Energy Engineering Research Laboratory. Research Triangle Park, NC. August 1986

113. 51 Federal Register 32,176-187, (September 9, 1986), Requirements for Preparation Adoption and Submittal of Implementation Plans.

114. Memorandum. Farmer, J.R., Director, Emission Standards and Engineering Division, Office of Air Quality Planning and Standards, U.S. EPA, to D.P. Howekamp, Director, Air Management Division, Region IX, U.S. EPA. *Delegation of New Source Performance Standards (NSPS) and National Emission Standards for Hazardous Air Pollutants (NESHAP) Authority to State/Local Agencies.* September 11, 1986. PN-111(e)-86-09-11-00. New Source Performance Standards Enforcement.

115. Memorandum. Tyler, D.D., Director, Control Programs Development Division, Office of Air Quality Planning and Standards, U.S. EPA, Research Triangle Park, NC, to D. Kee, Director, Air Management Division, Region V, U.S. EPA. *Applicability of PSD to Portions of a Plant Constructed in Phases Without Permits.* October 21, 1986. PN-165-86-10-21-025. Preconstruction Requirements.

116. 51 Federal Register 40,656-77, (November 7, 1986), Attainment and Maintenance of National Standards.

117. Memorandum. Emison, G.A., Director, Office of Air Quality Planning and Standards, U.S. EPA, to D. Kee, Director, Air Management Division, Regions V, U.S. EPA. *Need for a Short-Term Best Available Control Technology (BACT) Analysis for the Proposed William A. Zimmer Power Plant.* November 24, 1986. PN-165-86-11-24-016. Preconstruction Requirements.

118. Memorandum. Tyler, D.D., Director, Control Programs Development Division, Office of Air Quality Planning and Standards, U.S. EPA, to D. Kee, Director, Air Management Division, Region V, U.S. EPA. *Need for Emission Cap on Complex Netting Sources.* December 1, 1986. PN-165-86-12-01-026. Preconstruction Requirements.

119. 51 Federal Register 43,814, (December 4, 1986), Emissions Trading Policy Statement; General Principles for Creation, Banking and Use of Emission Reduction Credits. PN-110-86-12-04-077. Implementation Plans.

120. U.S. Environmental Protection Agency. *Procedures for Estimating Probability of Nonattainment of a PM_{10} NAAQS Using Total Suspended Particulate or PM_{10} Data.* EPA-450/4-86-017. Office of Air Quality Planning and Standards. Research Triangle Park, NC. December 1986

121. Letter. Rasnic, J.B., Acting Director, Stationary Source Compliance Division, Office of Air Quality Planning and Standards, U.S. EPA, to T. Bispharm, Air Quality Administrator, Department of Environmental Quality, Portland, OR. *Minimum CDS Data Reporting Requirements.* January 9, 1987. PN-113-87-01-09-034. Federal Enforcement.

122. Memorandum. Helms, G.T., Chief, Control Programs Operations Branch, Office of Air Quality Planning and Standards, U.S. EPA, Research Triangle Park, NC, to B. Miller, Chief, Air Programs Branch, Region IV, U.S. EPA. *Determination of Economic Feasibility.* January 20, 1987. PN-110-87-01-20-080. Implementation Plans.

123. Memorandum. Tyler, D.D., Director, Control Programs Development Division, Office of Air Quality Planning and Standards, U.S. EPA, to Director, Air Division, Regions I-X, U.S. EPA. *Implementation of the Revised Modeling Guideline for Prevention of Significant Deterioration (PSD).* January 29, 1987. PN-165-87-01-29-027. Preconstruction Requirements.

124. Memorandum. Potter, J.C., Assistant Administrator, Office of Air and Radiation, U.S. EPA, to Director, Air Management Division, Regions I, III, V, and IX; and others, U.S. EPA. *Plantwide Definition of Major Stationary Sources of Air Pollution.* February 27, 1987. PN-165-87-02-27-017. Preconstruction Requirements.

125. U.S. Environmental Protection Agency. *Protocol for Reconciling Differences Among Receptor and Dispersion Models.* EPA-450/4-87-008, Office of Air Quality Planning and Standards. Research Triangle Park, NC. March 1987

126. Memorandum. Tyler, D.D., Director, Control Programs Development Division, U.S. EPA, to PM_{10} Advisory Task Force. *PM_{10} Advisory Task Force Meeting.* March 13, 1987.

127. *Guideline on Exceptions to Data Requirements for Determining Attainment of Particulate Matter Standards.* EPA-450/4-87-005. Office of Air Quality Planning and Standards. Research Triangle Park, NC. April 1987

128. Memorandum. Tyler, D.D., Director, Control Programs Development Division, Office of Air Quality Planning and Standards, U.S. EPA, to I. Dickstein, Director, Air and Toxics Division, Region VIII, U.S. EPA. *Wyoming - Definition of Ambient Air.* April 7, 1987

129. Memorandum. Seitz, J.S., Director, Stationary Source Compliance Division, Office of Air Quality Planning and Standards, U.S. EPA, to Air Management Division Directors, Regions I, III, and IX; and others, U.S. EPA. *Clarification of New Source Review Policy on Averaging Times for Production Limitations.* April 8, 1987. PN-165-87-04-08-018. Preconstruction Requirements.

130. Memorandum. Farmer, J., Director, Emissions Standards and Engineering Division, U.S. EPA, Research Triangle Park, NC, to D.D. Tyler, Director, Control Programs Development Division, U.S. EPA. *PM10 Stack Sampling Method in 40 CFR Part 51.* April 9, 1987

131. Memorandum. Tyler, D.D., Director, Control Programs Development Division, Office of Air Quality Planning and Standards, U.S. EPA, to G. Emison, U.S. EPA. *Note to Craig Potter explaining the elements of the PM_{10} implementation program.* April 20, 1987

132. Memorandum. Bauman, R.D., Chief, Standards Implementation Branch, U.S. EPA, to J.A. Tikvart, Chief, Source Receptor Analysis Branch, U.S. EPA. *Valley Stagnation Model.* April 21, 1987

133. Memorandum. Helms, G.T., Chief, Controlled Programs Operations Branch, Office of Air Quality Planning and Standards, U.S. EPA, to Bruce Miller, Chief, Air Programs Branch, Region IV, U.S. EPA. *Ambient Air.* April 30, 1987. PN-110-87-04-30-082. Implementation Plans.

134. Memorandum. Helms, G.T., Chief, Control Programs Operations Branch, Office of Air Quality Planning and Standards, U.S. EPA, to S. Rothblatt, Chief, Air Branch, Region V, U.S. EPA. *Ambient Air.* April 30, 1987. PN-110-87-04-30-083. Implementation Plans.

135. U.S. Environmental Protection Agency. *Ambient Monitoring Guidelines for Prevention of Significant Deterioration (PSD).* EPA-450/4-87-007. Research Triangle Park, NC. May 1987

136. U.S. Environmental Protection Agency. *Protocol for Applying and Validating the CMB Model.* EPA-450/4-87-010. Office of Air Quality Planning and Standards. Research Triangle Park, NC. May 1987

137. U.S. Environmental Protection Agency. *Example Modeling to Illustrate SIP Development for the PM_{10} NAAQS.* EPA-450/4-87-012. Office of Air Quality Planning and Standards. Research Triangle Park, NC. May 1987

138. U.S. Environmental Protection Agency. *Network Design and Optimum Site Exposure Criteria for Particulate Matter.* EPA-450/4-87-009. Office of Air Quality Planning and Standards. Research Triangle Park, NC. May 1987

139. Memorandum. Rhoads, R.G., Director, Monitoring and Data Analysis Division, Office of Air Quality Planning and Standards, U.S. EPA, to Director, Air Management Division, Regions I, III, V, and IX; and others, U.S. EPA. *Guidance on Accounting for Trends in Particulate Matter Emission and Air Quality Data.* May 11, 1987. PN-110-87-05-11-088.

140. Memorandum. Seitz, J.S., Director, Stationary Source Compliance Division, Office of Air Quality Planning and Standards, U.S. EPA, to D.P. Howekamp, Director, Air Management Division, Region IX, U.S. EPA. *Reactivation of Noranda Lakeshore Mines' RLA Plant and PSD Review.* May 27, 1987. PN-113-87-05-27-036. Federal Enforcement.

141. U.S. Environmental Protection Agency. *PM-10 SIP Development Guideline.* EPA-450/2-86-001. Office of Air Quality Planning and Standards. Research Triangle Park, NC. June 1987

142. U.S. Environmental Protection Agency. *On-Site Meteorological Program Guidance for Regulatory Modeling Applications.* EPA-450/4-87-013. Office of Air Quality Planning and Standards. Research Triangle Park, NC. June 1987

143. Memorandum. Woodard, K.R., Plans and Policies Section, Office of Air Quality Planning and Standards, U.S. EPA, to L. Clayton, Central Docket Section, U.S. EPA. *Material for Docket A-82-38 [regarding regulation for implementing revised particulate matter standards].* June 1, 1987

144. Memorandum. Emison, G.A., Director, Office of Air Quality Planning and Standards, U.S. EPA, to Director, Air Management Division, Regions I, III, V, and IX; and others, U.S. EPA. *Operational Guidance on Control Technology for New and Modified Municipal Waste Combustors (MWCs).* June 26, 1987. PN-165-87-06-26-020. Preconstruction Requirements.

145. U.S. Environmental Protection Agency. *Supplement A to the Guideline On Air Quality Models (Revised).* EPA-450/2-78-027R. Office of Air Quality Planning and Standards. Research Triangle Park, NC. July 1987

146. 52 Federal Register 24,634-69, (July 1, 1987), Revisions to the National Ambient Air Quality Standards for Particulate Matter.

147. 52 Federal Register 24,716-23, (July 1, 1987), Air Programs; Particulate Matter (PM-10) Fugitive Dust Policy.

148. 52 Federal Register 24,724-35, (July 1, 1987), Ambient Air Monitoring Reference and Equivalent Methods.

149. 52 Federal Register 24,736-50, (July 1, 1987), Ambient Air Quality Surveillance for Particulate Matter.

150. 52 Federal Register 24,670-716, (July 1, 1987), Air Programs; Review of National Secondary Ambient Air Quality Standards for Particulate Matter.

151. Memorandum. Helms, G.T., Chief, Controlled Programs Operations Branch, Office of Air Quality Planning and Standards, U.S. EPA, to C. Walters, Chief, Air Branch, Region VII, U.S. EPA. *Definition of Volatile Organic Compounds (VOC's).* July 21, 1987. PN-110-87-07-21-089. Implementation Plans.

152. Memorandum. Helms, G.T., Office of Air Quality Planning and Standards, U.S. EPA, to W.S. Baker, Air Branch Chief, Region II, U.S. EPA. *Ambient Air Issues from New Jersey Department of Environmental Protection.* July 27, 1987

153. Memorandum. Emison, G.A., Director, Office of Air Quality Planning and Standards, U.S. EPA, to Director, Air Management Division, Regions I, III, V, and IX; and others, U.S. EPA. *State Implementation Plans for Sulfur Dioxide.* July 29, 1987. PN-110-87-07-29-084. Implementation Plans.

154. U.S. Environmental Protection Agency. *Regional Workshop for Revised Air Quality Standards for Particulate Matter (PM_{10}).* Office of Air Quality Planning and Standards. Research Triangle Park, NC. August 1987

155. Memorandum. D.D. Tyler, Director, Control Programs Development Division, Office of Air Quality Planning and Standards, U.S. EPA, to Director, Air Management Division, Regions I, III, IX; and others, U.S. EPA. *Implementation of Revised Prevention of Significant Deterioration (PSD) Program for Particulate Matter.* August 5, 1987. PN-165-87-08-05-028. Preconstruction Requirements.

156. 52 Federal Register 29,382-5, (August 7, 1987), National Ambient Air Quality Standards for Particulate Matter.

157. Memorandum. Tyler, D.D., Director, Control Programs Development Division, U.S. EPA, to Regional Air Division Directors, U.S. EPA. *Development Plan for PM_{10} State Implementation Plans (SIP's).* August 11, 1987

158. Memorandum. Emison, G.A., Director, Office of Air Quality Planning and Standards, U.S. EPA, to Regional Air Division Directors, U.S. EPA. *Processing of Particulate Matter State Implementation Plan Revisions.* August 11, 1987

159. Memorandum. Helms, G.T., Chief, Control Programs Operations Branch, Office of Air Quality Planning and Standards, U.S. EPA, to Chief, Air Branch, Regions I-X, U.S. EPA. *Technical Support for Stack Height Negative Declarations.* September 3, 1987. PN-123-87-09-03-013. Stack Heights.

160. Memorandum. Helms, G.T., Chief, Control Programs Operations Branch, Office of Air Quality Planning and Standards, U.S. EPA, to B.P. Miller, Chief, Air Programs Branch, Region IV, U.S. EPA. *Ambient Air Definition.* September 21, 1987. PN-110-87-09-21-086. Implementation plans.

161. Memorandum. Potter, J.C., Assistant Administrator, Office of Air and Radiation; and others, U.S. EPA, to Regional Administrators and Counsels; and others, U.S. EPA. *Review of State Implementation Plans and Revisions for Enforceability and Legal Sufficiency.* September 23, 1987. PN-113-87-09-23-041.

162. Memorandum. Alushin, M.S., Associate Enforcement Counsel, Air and Radiation Division, U.S. EPA; and others, to Regional Administrators, Regions I-X, U.S. EPA. *Review of State Implementation Plans and Revisions for Enforceability and Legal Sufficiency.* September 23, 1987

163. Memorandum. Tyler, D.D., Director, Control Programs Development Division, Office of Air Quality Planning and Standards, U.S. EPA, to Director, Air Management Division, Regions I, III, IX; and others, U.S. EPA. *Clarification of Implementation Policies for PM_{10} National Ambient Air Quality Standards (NAAQS).* October 2, 1987. PN-110-87-10-02-091.

164. Memorandum. Helms, G.T., Chief, Control Programs Operations Branch, Office of Air Quality Planning and Standards, U.S. EPA, to Chief, Air Branch, Regions I-X, U.S. EPA. *Processing of Stack Height Negative Declarations.* October 9, 1987. PN-123-87-10-09-014. Stack Heights.

165. Memorandum. Adams, T.L. Jr., Assistant Administrator, Office of Enforcement and Compliance Monitoring; and Potter, J.C., Assistant Administrator, Office of Air and Radiation, U.S. EPA, to Regional Administrators and Counsels; and others, U.S. EPA. *Settling Enforcement Actions in Clean Air Act Nonattainment Areas Against Stationary Air Sources Which Will Not Be in Compliance by the Applicable Attainment Date.* November 23, 1987. PN-113-87-11-23-042. Federal Enforcement.

166. Memorandum. Potter, J.C., Assistant Administrator, Office of Air and Radiation, U.S. EPA, to Regional Administrator, Regions I-X, U.S. EPA. *Improving New Source Review (NSR) Implementation.* December 1, 1987. PN-165-87-12-01-022. Preconstruction Requirements.

167. Memorandum. Alushin, M.S., Associate Enforcement Counsel for Air, Office of Enforcement and Compliance Monitoring; and Seitz, J.S., Director, Stationary Source Compliance Division, Office of Air Quality Planning and Standards, U.S. EPA, to Regional Counsels, Regions I-X, U.S. EPA. *Guidance on Evaluating Clean Air Act Enforcement of State Implementation Plan Violations Involving Proposed State Revisions.* December 31, 1987. PN-113-87-12-31-043. Federal Enforcement.

168. 53 Federal Register 480, (January 7, 1988), Stack Height Emissions Balancing; Final Policy. PN-123-88-01-07-015. Stack Heights.

169. Letter. Bauman, R.D., Chief, SO_2/Particulate Matter Programs Branch, U.S. EPA, to G. Satterfield, Technical Director, Wood Heating Alliance, Washington, DC. *Response to letter of November 2, 1987 regarding State regulation of emissions from wood stoves and fireplaces.* January 25, 1988

170. U.S. Environmental Protection Agency. *Gap Filling PM_{10} Emission Factors for Selected Open Area Dust Sources.* EPA-450/4-88-003. Office of Air Quality Planning and Standards. Research Triangle Park, NC. February 1988

171. Memorandum. Calcagni, J., Director, Air Quality Management Division, U.S. Environmental Protectional Agency, to G. O'Neal, Director, Air and Toxics Division, Region X, U.S. EPA. *Interpretation of "Expected Exceedance" for Determining Ozone and PM_{10} Attainment Status and Design Values.* March 8, 1988

172. Memorandum. Alushin, M.S., Associate Enforcement Counsel for Air, U.S. EPA, to T.L. Adams, Jr., Assistant Administrator for Enforcement and Compliance Monitoring; and J.C. Potter, Assistant Administrator, Office of Air and Radiation, U.S. EPA. *Opinion in U.S. Louisiana-Pacific Corporation, Civil Action No. 86-A-1880 (D. Colorado, March 22, 1988).* March 29, 1988. PN-167-88-03-29-002. PSD Enforcement.

173. Memorandum. Seitz, J.S., Director, Stationary Source Compliance Division, Office of Air Quality Planning and Standards, U.S. EPA, to Air Management Division Directors, Regions I, III, and IX; and others, U.S. EPA. *Compliance Monitoring Strategy for FY 89.* March 31, 1988. PN-114-88-03-31-006. Inspections, Monitoring, and Entry.

174. Memorandum. Seitz, J.S., Director, Stationary Source Compliance Division, Office of Air Quality Planning and Standards, U.S. EPA, to Air Management Division Directors, Regions I, III, and IX; and others, U.S. EPA. *Transmittal of OAQPS Interim Control Policy Statement.* March 31, 1988. PN-113-88-03-31-047. Federal Enforcement.

175. Memorandum. Emison, G.A., Office of Air Quality Planning and Standards, U.S. EPA, to Air Management Division Director, Regions I, III, and IX; and others, U.S. EPA. *Transmittal of Reissued OAQPS CEMS Policy.* March 31, 1988. (PN 113-88-03-31-048)

176. Memorandum. Woodard, K., Particulate Matter Programs Section, Office of Air Quality Planning and Standards, U.S. EPA, to PM_{10} Regional Contacts, U.S. EPA. *PM_{10} SIP Tracking System.* April 5, 1988

177. Memorandum from Potter, J.C., Office of Air and Radiation, U.S. EPA, to Air Management Division Director, Regions I, III, and IX; and others, U.S. EPA. *Interim Policy on Stack Height Regulatory Actions.* April 22, 1988

178. Memorandum. Stonefield, D.H., Chief, Particulate Matter Programs Section, Office of Air Quality Planning and Standards, U.S. EPA, to Chief, Air Branch, Regions I-X, U.S. EPA. *Draft Guidance on Control of Urban Fugitive Dust.* May 3, 1988

179. Memorandum. Stonefield, D.H., Chief, Particulate Matter Programs Section, SDPMPB, U.S. EPA, to Chief, Air Branch, Regions I-X, U.S. EPA. *PM_{10} SIP Checklist.* May 13, 1988

180. Memorandum. Regional Meteorologists, Regions I-X, U.S. EPA, to Tikvart, J., Chief, Source Receptor Analysis Branch, U.S. EPA. *Ambient Air.* May 16, 1988

181. Memorandum. Calcagni, J., Director, Air Quality Management Division, Office of Air Quality Planning and Standards, U.S. EPA, to Chief, Air Branch, Regions I-X, U.S. EPA. *Application of the Interim Policy for Stack Height Regulatory Actions.* May 17, 1988. PN-123-88-05-17-016. Stack Heights.

182. U.S. Environmental Protection Agency. *PM_{10} SIP Development Guideline - Supplement.* Office of Air Quality Planning and Standards. Research Triangle Park, NC. June 1988

183. U.S. Environmental Protection Agency. *Response to Questions Regarding PM_{10} State Implementation Plan (SIP) Development.* Office of Air Quality Planning and Standards. Research Triangle Park, NC. June 1988

184. Memorandum from Tikvart, J.A., OAQPS, to Regional Chiefs; and others, U.S. EPA. *Revised Model Clearinghouse Operational Plan.* June 7, 1988

185. Memorandum. Calcagni, J., Director, Air Quality Management Division, Office of Air Quality Planning and Standards, U.S. EPA, to G. O'Neal, Director, Air and Toxics Division, Region X, U.S. EPA. *Demonstration of "Representative Emission Conditions" for Use in "Expected Exceedance" Determinations.* June 17, 1988. PN-110-88-06-17-094. Implementation Plans.

186. Memorandum. Emison, G.A., Director, Office of Air Quality Planning and Standards, U.S. EPA, to Director, Air Management Division, Regions I, III, IX; and others, U.S. EPA. *"Grandfathering" of Requirements for Pending SIP Revisions.* June 27, 1988. PN-110-88-06-27-095. Implementation Plans.

187. Memorandum. Stonefield, D.H., Chief, Particulate Matter Program Section, Office of Air Quality Planning and Standards, U.S. EPA, to Chief, Air Branch, Regions I-X, U.S. EPA. *PM_{10} SIP Checklist.* July 1, 1988

188. Memorandum. Emison, G.A., Director, Office of Air Quality Planning and Standards, U.S. EPA, to Thomas J. Maslany, Director, Air Management Division. *Air Quality Analysis for Prevention of Significant Deterioration (PSD).* July 5, 1988. PN-165-88-07-05-032. Preconstruction Requirements.

189. Memorandum. Alushin, M.S., Associate Enforcement Counsel for Air, Office of Enforcement and Compliance Monitoring; and Seitz, J.S., Director, Stationary Source Compliance Division, Office of Air Quality Planning and Standards, U.S. EPA, to Regional Counsels, Regions I-X, U.S. EPA. *Procedures for EPA to Address Deficient New Source Permits Under the Clean Air Act.* July 15, 1988. PN-167-88-07-15-003. PSD Enforcement.

190. U.S. Environmental Protection Agency. *Screening Procedures for Estimating the Air Quality Impact of Stationary Sources.* EPA-450/4-88-010. Office of Air Quality Planning and Standards. Research Triangle Park, NC. August 1988

191. Memorandum. Seitz, J.S., Director, Stationary Source Compliance Division, Office of Air Quality Planning and Standards; and Alushin, M.S., Associate Enforcement Counsel for Air, Office of Enforcement and Compliance Monitoring, U.S. EPA, to Air Management Division Directors, Regions I, III, and IX; and others, U.S. EPA. *Identifying and Expediting SIP Revisions that Impact the Enforcement Process.* August 5, 1988. PN-110-88-08-05-096. Implementation Plans.

192. Memorandum. Calcagni, J., Director, Air Quality Management Division, Office of Air Quality Planning and Standards, U.S. EPA, to D. Kee, Director, Air and Radiation Division, Region V. *Transfer of Technology in Determining Lowest Achievable Emission Rate (LAER).* August 29, 1988. PN-165-88-08-29-034. Preconstruction Requirements.

193. U.S. Environmental Protection Agency. *Control of Open Fugitive Dust Sources.* EPA-450/3-88-008. Office of Air Quality Planning and Standards. Research Triangle Park, NC, September 1988

194. Memorandum. Clay, D.R., Acting Assistant Administrator, Office of Air and Radiation, U.S. EPA, to D.A. Kee, Director, Air and Radiation Division, U.S. EPA. *Applicability of Prevention of Significant Deterioration (PSD) and New Source Performance Standards (NSPS) Requirements to the Wisconsin Electric Power Company (WEPCO) Port Washington Life Extension Project.* September 9, 1988. Pn-165-88-09-09-035. Preconstruction Requirements.

195. Letter. Thomas, L.M., Administrator, Office of Air and Radiation, U.S. EPA, to J.W. Boston, Vice President, Wisconsin Electric Power Company, Milwaukee, WI. *Response to a request made on September 15 concerning final determinations regarding the applicability of the Clean Air Act's New Performance Standards (NSPS) and Prevention of Significant Deterioration (PSD) requirements to the proposed life extension project at the Port Washington steam electric generating station.* October 14, 1988. PN-165-88-10-14-036. Preconstruction Requirements.

196. Memorandum. Clay, D.R., Acting Assistant Administrator, Office of Air and Radiation, U.S. EPA, to Regional Administrators, Regions I-X, U.S. EPA. *Guidance on Long-term Nonattainment of the PM_{10} Standards.* November 4, 1988. Pn-110-88-11-04-098. Implementation Plans.

197. Memorandum. Emison, G.A., Director, Office of Air Quality Planning and Standards, U.S. EPA, to Director, Air Management Division, Regions I, III, IX; and others, U.S. EPA. *Revision to Policy on the Use of PM_{10} Measurement Data.* November 21, 1988. PN-110-88-11-21-099. Implementation Plans.

198. 54 Federal Register 2,138-41, (January 19, 1989), State Implementation Plan Completeness Review - Appendix V: Criteria for Determining the Completeness of Plan Submissions.

199. 54 Federal Register 2,214-26, (January 19, 1989), State Implementation Plan Processing Reform.

200. U.S. Environmental Protection Agency. *Guidelines for the Review of SIP Revisions by EPA Regional Offices.* EPA-450/2-89-005. Office of Air Quality Planning and Standards. Research Triangle Park, NC. February 1989

201. Memorandum. Clay, D.R., Acting Assistant Administrator, Office of Air and Radiation, U.S. EPA, to J.W. Boston, Vice President, Wisconsin Electric Power Company, Milwaukee, WI. *Response to a request made on September 15 concerning revised final determination regarding the applicability of the Clean Air Act's New Performance Standards (NSPS) and Prevention of Significant Deterioration (PSD) requirements to the proposed life extension project at the Port Washington steam electric generating station.* February 15, 1989. PN-165-89-02-15-042. Preconstruction Requirements.

202. Memorandum from Bauman, R.D., Office of Air Quality Planning and Standards, U.S. EPA, to J. Tikvart, Office of Air Quality Planing and Standards, U.S. EPA. *Revised Final Determination, on Reconsideratrion, Regarding the Applicability of the Clean Air Act's New Source Performance Standards (NSPS) and Prevention of Significant Deterioration (PSD) Provisions on the Life Extension Project at Port Washington Steam Electric Power Company.* February 15, 1989

203. Memorandum. Seitz, J.S., Director, Stationary Source Compliance Division, Office of Air Quality Planning and Standards, U.S. EPA, to D. Kee, Director, Air and Radiation Division, Region V, U.S. EPA. *Cut-off Date for Determining LAER in Major New Source Permitting.* February 24, 1989. PN-165-89-02-24-046. Preconstruction Requirements.

204. Memorandum. Calcagni, J., Director, Air Quality Management Division, Office of Air Quality Planning and Standards, U.S. EPA, to D. Kee, Director, Air and Radiation Division, Region V, U.S. EPA. *Guidance on Determining Lowest Achievable Emission Rate (LAER).* February 28, 1989. PN-165-89-02-28-038. Preconstruction Requirements.

205. U.S. Environmental Protection Agency. *Procedures for Estimating and Allocating Area Source Emissions of Air Toxics - Working Draft.* Office of Air Quality Planning and Standards. Research Triangle Park, NC. March 1989

206. Memorandum. Calcagni, J., Director, Air Quality Management Division; and William G. Laxton, Director, Technical Support Division, Office of Air Quality Planning and Standards, U.S. EPA, to T.J. Maslany, Director, Air Management Division, Region III,; and W.B. Hathaway, Director, Air, Pesticides, and Toxics Division, Region VI, U.S. EPA. *Use of Allowable Emissions for National Ambient Air Quality Standards (NAAQS) Impact Analyses Under the Requirements for Prevention of Significant Deterioration (PSD).* March 16, 1989. PN-165-89-03-16-039. Preconstruction Requirements.

207. Memorandum. Calcagni, J., Air Quality Management Division, Office of Air Quality Planning and Standards, U.S. EPA, to W.B. Hathaway, Director, Air, Pesticides, and Toxics Division, Region VI, U.S. EPA. *Application of Building Downwash in Prevention of Significant Deterioration (PSD) Permit Analyses.* March 31, 1989. PN-165-89-03-31-040. Preconstruction Requirements.

208. Letter. Emison, G.A., Office of Air Quality Planning and Standards, U.S. EPA, to J.P. Proctor. *Response to letter of February 23, 1989 to Administrator Reilly.* April 20, 1989

209. Memorandum. Calcagni, J., Director, Air Quality Management Division, U.S. EPA, to W. Laxton, Director, Technical Support Division, U.S. EPA. *Identification of New Areas Exceeding the NAAQS.* May 3, 1989.

210. Memorandum. Emison, G.A., Director, Office of Air Quality Planning and Standards, U.S. EPA, to I.L. Dickstein, Director, Air and Toxics Division, Region VIII, U.S. EPA. *Response to PM-10 Control Strategy Issues.* June 30, 1989. PN-110-89-06-30-103.

211. U.S. Environmental Protection Agency. *Procedures for Emission Inventory Preparation, Volume IV: Mobile Sources.* EPA-450/4-81-026d (Revised). Office of Air Quality Planning and Standards. Research Triangle Park, NC. July 1989

212. Memorandum. Seitz, J.S., Director, Stationary Source Compliance Division, Office of Air Quality Planning and Standards, U.S. EPA, to T.J. Maslany, Director, Air Management Division, Region III, U.S. EPA. *LAER Determination for a Previously Constructed Source.* August 9, 1989. PN-165-89-08-09-047. Preconstruction Requirements.

213. Memorandum. Calcagni, J., Director, Air Quality Management Division, U.S. EPA, to T.J. Maslany, Director, Air Management Division, Region III, U.S. EPA. *Review of PM-10 Implementation Policy.* August 14, 1989. PN-110-89-08-14-104. Implementation Plans.

214. Memorandum. Calcagni, J., Director, Air Quality Management Division, Office of Air Quality Planning and Standards, U.S. EPA, Research Triangle Park, NC, to Director, Air Division, Regions I-II, IV-VII, IX-X. *PM-10 Implementation Policy.* August 24, 1989

215. U.S. Environmental Protection Agency. *Guideline Series - Guidance Document for Residential Wood Combustion Emission Control Measures.* EPA-450/2-89-015. Office of Air Quality Planning and Standards. Research Triangle Park, NC. September 1989

216. Memorandum. Calcagni, J., Director, Air Quality Management Division, Office of Air Quality Planning and Standards, U.S. EPA, to W.B. Hathaway, Director, Air, Pesticides, and Toxics Division, Region VI, U.S. EPA. *Request for Clarification of Policy Regarding the "Net Emissions Increase."* September 18, 1989. PN-165-89-09-18-045. Preconstruction Requirements.

217. U.S. Environmental Protection Agency. *Inspection Manual for PM-10 Emissions from Paved/Unpaved Roads and Storage Piles.* EPA-340/1-89-007. Office of Air and Radiation. Washington, DC. October 1989

218. U.S. Environmental Protection Agency. *Model Clearinghouse: FY-89 Summary Report.* Office of Air Quality Planning and Standards. Research Triangle Park, NC. October 1989

219. Memorandum. Calcagni, J., Director, Air Quality Management Division, Office of Air Quality Planning and Standards, U.S. EPA, to W.A. Smith, Director, Air, Pesticides, and Toxics Management Division, Region IV, U.S. EPA. *Criteria for Group II Area SIP Reviews.* October 19, 1989

220. Memorandum. Calcagni, J., Director, Air Quality Management Division, Office of Air Quality Planning and Standards, U.S. EPA, to W.G. Laxton, Director, Technical Support Division, Office of Air Quality Planning and Standards, U.S. EPA. *Assistance in Development Information Needed for PM-10 Implementation.* October 30, 1989

221. U.S. Environmental Protection Agency. *PM_{10} Emission Factor Listing Developed by Technology Transfer and AIRS Source Classification Codes with Documentation.* EPA-450/4-89-022. Office of Air Quality Planning and Standards. Research Triangle Park, NC. November 1989

222. U.S. Environmental Protection Agency. *Receptor Model Technical Series - Volume III (1989 Revision): CMB7 User's Manual.* EPA-450/4-90-004. Office of Air Quality Planning and Standards. Research Triangle Park, NC. January 1990

223. Letter. Emison, G.A., Director, Office of Air Quality Planning and Standards, U.S. EPA, to M. Sterling, Director, Environmental Protection, Detroit Edison Company, Detroit, MI. *Follow-up to an October 19 meeting requesting a review of Region V's previous determination that the proposed fuel conversion was a "major modification" for PSD purposes.* January 18, 1990. PN-165-90-01-18-049. Preconstruction Requirements.

224. 55 Federal Register 5,824-31, (February 16, 1990), State Implementation Plan Completeness Review; Final Rulemaking.

225. U.S. Environmental Protection Agency. *AIRS Facility Subsystem Source Classification Codes and Emission Factor Listing for Criteria Air Pollutants.* EPA-450/4-90-003. Office of Air Quality Planning and Standards. Research Triangle Park, NC. March 1990

226. Memorandum. Stonefield, D.H., Chief, Particulate Matter Programs Section, Office of Air Quality Planning and Standards, U.S. EPA, to Chief, Air Branch, Regions I-X, U.S. EPA. *PM10 Issues.* May 22, 1990

227. Letter. Rosenberg, W.G., Assistant Administrator, Office of Air and Radiation, U.S. EPA, to J. Boston, Wisconsin Electric Power Company, Milwaukee, WI. *United States Court of Appeals decision regarding a challenge by WEPCO to two final determinations issued by the EPA.* June 8, 1990. PN-165-90-06-08-050. Preconstruction Requirements.

228. Memorandum. Laxton, W.G., Director, Technical Support Division, Office of Air Quality Planning and Standards, U.S. EPA, to W.A. Smith, Director, Air, Pesticides and Toxics Management Division, Region IV, U.S. EPA. *Replacement of Surrogate PM_{10} Monitors.* June 18, 1990. PN-110-90-06-18-105. Implementation Plans.

229. Memorandum. Bauman, R.D., Chief, SO_2/Particulate Matter Programs Branch; and Tikvart, J.A., Chief, Source Receptor Analysis Branch, Office of Air Quality Planning and Standards, U.S. EPA, to Chief, Air Branch, Regions I-X, U.S. EPA. *PM-10 SIP Demonstration for Small Isolated Areas with Spatially Uniform Emissions.* July 5, 1990. PN-110-90-07-05-106.

230. *Code of Federal Regulations*, Title 40, Part 50, Appendix K - Interpretation of the National Ambient Air Quality Standards for Particulate Matter. July 1, 1990

231. U.S. Environmental Protection Agency. *New Source Review Workshop Manual - Prevention of Significant Deterioration and Nonattainment Area Permitting - Draft Report.* Office of Air Quality Planning and Standards. Research Triangle Park, NC. October 1990

232. Memorandum. Tikvart, J.A., Chief, Source Receptor Analysis Branch, Office of Air Quality Planning and Standards, U.S. EPA, to U.S. EPA Regional Modeling Contacts, Regions I - X, U.S. EPA. *Model Clearinghouse: FY-90 Summary Report.* October 1, 1990

233. Memorandum. Bauman, R.D., Chief, SO_2/Particulate Matter Programs Branch, Office of Air Quality Planning and Standards, U.S. EPA, to Chief, Air Branch, Regions I-X, U.S. EPA. *Control Techniques Guidelines (CTG's) for PM-10.* October 4, 1990

234. 55 Federal Register 45,799-804, (October 31, 1990), Preparation, Adoption, and Submittal of State Implementation Plans; Corrections to PM-10 Areas of Concern.

235. U.S. Environmental Protection Agency. *VOC/PM Speciation Data System Documentation and User's Guide, Version 1.32a.* EPA-450/2-91-002. Office of Air Quality Planning and Standards. Research Triangle Park, NC. November 1990

236. Memorandum. Seitz, J.S., Director, Office of Air Quality Planning and Standards, U.S. EPA, to Director, Air Management Division, Region III; and others, U.S. EPA. *Nonattainment Designations and Classifications.* November 14, 1990

237. Memorandum. Calcagni, J., Director, Air Quality Management Division, Office of Air Quality Planning and Standards, U.S. EPA, to I.L. Dickstein, Director, Air and Toxics Division, Region VIII, U.S. EPA. *Stack Height Questions.* November 27, 1990

238. Memorandum. Calcagni, J., Director, Air Quality Management Division; and Laxton, W.G., Director, Technical Support Division, Office of Air Quality Planning and Standards, U.S. EPA, to Regional Air Division Directors, U.S. EPA. *PM-10 Attainment Demonstration Policy for Initial Moderate Nonattainment Areas.* March 4, 1991

239. Memorandum. Seitz, J.S., Director, Office of Air Quality Planning and Standards, U.S. EPA, to Director, Air, Pesticides, and Toxics Management Division, Regions I, IV, and VI; and others, U.S. EPA. *New Source Review (NSR) Program Transitional Guidance.* March 11, 1991

240. 56 Federal Register 11,101-5, (March 15, 1991), Designations and Classifications for Initial PM-10 Nonattainment Areas.

241. Memorandum. Rasnic, J., Acting Director, Stationary Source Compliance Division, Office of Air Quality Planning and Standards, U.S. EPA, to Air Management Division Directors, Regions I, III, and IX; and others, U.S. EPA. *Revised Compliance Monitoring Strategy.* March 29, 1991

242. Letter. Reilly, W.K., Administrator, U.S. EPA, Washington, D.C., to J.D. Dingell, Chairman, Subcommittee on Oversight and Investigations, Committee on Energy and Commerce, House of Representatives, Washington, D.C. *Response to letter of November 2, 1990 Regarding the General Accounting Office's (GAO) report of September 27, 1990 Which is Entitled "Air Pollution: Improvements Needed in Detecting and Preventing Violations".* April 10, 1991

243. 56 Federal Register 16,274-6, (April 22, 1991), Preparation, Adoption, and Submittal of State Implementation Plans; PM-10, Sulfur Dioxide, and Lead Nonattainment and Unclassifiable Area Designations.

244. U.S. Environmental Protection Agency. *Guidance for Completing the USEPA PM-10 Exceedance Report (Draft).* Office of Air Quality Planning and Standards. Research Triangle Park, N.C. May 1991

245. 56 Federal Register 23,826-8, (May 24, 1991), State Implementation Plan Completeness Criteria.

246. U.S. Environmental Protection Agency. *Guidance Document for Selecting Antiskid Materials Applied to Ice- and Snow-Covered Roadways.* EPA-450/3-90-007. Office of Air Quality Planning and Standards. Research Triangle Park, NC. July 1991

247. U.S. Environmental Protection Agency. *Procedures for Preparing Emissions Projections.* EPA-450/4-91-019. Office of Air Quality Planning and Standards. Research Triangle Park, NC, July 1991

248. 56 Federal Register 37,653-65, (August 8, 1991), Designations and Classifications for Initial PM-10 Nonattainment Areas.

249. Memorandum. Renner, F.H. Jr., Acting Chief, SO_2/Particulate Matter Programs Branch, Office of Air Quality Planning and Standards, U.S. EPA, to Chief, Air Branch, Regions I-X, U.S. EPA. *Questions and Answers (Q&A's) for Particulate Matter, Sulfur Dioxide (SO_2), and Lead (Pb).* August 20, 1991

250. 56 Federal Register 42,216-9, (August 26, 1991), State Implementation Plan Completeness Criteria.

251. Memorandum. Paisie, J.W., Acting Chief, SO_2/Particulate Matter Programs Branch, Office of Air Quality Planning and Standards, U.S. EPA, to Chief, Air Branch, Regions I-X, U.S. EPA. *Questions and Answers (Q&A's) for Particulate Matter, Sulfur Dioxide (SO_2), and Lead (Pb).* November 4, 1991

252. 56 Federal Register 65,433-42, (December 17, 1991), Preparation, Adoption, and Submittal of State Implementation Plans, Method for Measurement of Condensible Particulate Emissions from Stationary Sources.

253. Memorandum. John Calcagni, Director, Air Quality Management Division, Office of Air Quality Planning and Standards, U.S. EPA, to Director, Air, Pesticides and Toxics Management Division, Region I and IV; and others, U.S. EPA. *Contingency Measure Due Date for Initial PM-10 Moderate Nonattainment Areas.* February 25, 1992

254. Letter. Skie, D.M., Chief, Air Programs Branch, Region VIII, U.S. EPA, to J.T. Chaffee, Montana Department of Health and Environmental Sciences. *East Helena Lead SIP.* March 13, 1992

255. 57 Federal Register 13,498-570, (April 16, 1992), State Implementation Plans; General Preamble for Implementation of Title I of the Clean Air Act Amendments of 1990; Proposed Rule.

256. 57 Federal Register 18,070-7, (April 28, 1992), State Implementation Plans; General Preamble for Implementation of Title I of the Clean Air Act Amendments of 1990; Supplemental; Proposed Rule.

257. Memorandum. Calcagni, J., Director, Air Quality Management Division, Office of Air Quality Planning and Standards, U.S. EPA, to Director, Air, Pesticides and Toxics Management Division, Regions I and IV; and others, U.S. EPA. *Processing of State Implementation Plan (SIP) Submittals.* July 9, 1992

258. Memorandum from Seitz, J.S., Director, Office of Air Quality Planning and Standards, U.S. EPA, to Director, Air, Pesticides and Toxics Division, Regions I, IV, and VI, U.S. EPA. *New Source Review (NSR) Program Supplemental Transitional Guidance on Applicability of New Part D NSR Permit Requirements.* September 3, 1992

259. Memorandum. Calcagni, J., Director, Air Quality Management Division, Office of Air Quality Planning and Standards, U.S. EPA, to Director, Air, Pesticides and Toxics Management Division, Regions I and IV; and others, U.S. EPA. *Procedures for Processing Requests to Redesignate Areas to Attainment.* September 4, 1992

260. U.S. Environmental Protection Agency. *PM_{10} SIP Checklist for General Requirement Applicable to Areas in Group I, Group II and Group III.* Office of Air Quality Planning and Standards. Research Triangle Park, NC.

PM-10 POLICY AND GUIDANCE

Document Number	Determining Air Quality Status	Emissions Inventory	State Implementation Plans	Air Quality Monitoring & Data Usage	Air Quality Modeling	Stack Height Regulations	Control Strategies	General Provisions	Permit Requirements	Compliance and Enforcement	New Source Performance Standards
1	Y										
2										X	
3				Y							
4										X	X
5										X	
6										X	
7										X	
8				Y							
9										X	
10	X						X				
11								X			
12	X						X				
13	X						X				
14										X	
15								X			
16								X			
17								X			
18								X			
19								X			
20								X			
21								X			
22								X			
23										X	
24								Y			
25										X	
26										X	
27								X			
28									Y		
29								X			
30	Y					X					
31										X	

PM-10 POLICY AND GUIDANCE

Document Number	Determining Air Quality Status	Emissions Inventory	State Implementation Plans	Air Quality Monitoring & Data Usage	Air Quality Modeling	Stack Height Regulations	Control Strategies	General Provisions	Permit Requirements	Compliance and Enforcement	New Source Performance Standards
32					Y						
33					Y						
34										X	
35								X			
36										X	
37										X	
38						Y					
39					Y						
40					Y						
41						Y					
42	X	X		X						X	
43		X									
44		X									
45	X	X		X							
46						Y					
47										X	
48										X	X
49										Y	
50										X	X
51							Y				
52							Y				
53	X										
54										Y	
55								X			
56					X						
57										Y	
58	Y							X			
59						Y					
60					Y						
61					Y						
62										X	

PM-10 POLICY AND GUIDANCE

Document Number	Determining Air Quality Status	Emissions Inventory	State Implementation Plans	Air Quality Monitoring & Data Usage	Air Quality Modeling	Stack Height Regulations	Control Strategies	General Provisions	Permit Requirements	Compliance and Enforcement	New Source Performance Standards
63	X										
64										X	
65	Y										
66				X				X			
67								X		X	
68										X	
69	X										
70								X			
71								X			
72					Y						
73					Y						
74	Y							X			
75					Y						
76					Y						
77										X	
78										X	
79										X	
80	Y				Y			X			
81				X			X				
82				Y							
83	X										
84										X	
85										X	
86						Y					
87					Y						
88								X			
89	Y										
90	X					Y					
91					Y						
92										X	
93					Y						

PM-10 POLICY AND GUIDANCE

Document Number	Determining Air Quality Status	Emissions Inventory	State Implementation Plans	Air Quality Monitoring & Data Usage	Air Quality Modeling	Stack Height Regulations	Control Strategies	General Provisions	Permit Requirements	Compliance and Enforcement	New Source Performance Standards
94						Y					
95						Y					
96						Y					
97	X										
98					Y	Y					
99						Y					
100						Y					
101						Y					
102	Y										
103						X					
104					X	Y					
105										X	
106										X	
107										X	
108				X	Y	Y		X			
109				Y							
110								X	X		
111										X	
112		X			X		Y				
113					Y						
114										X	X
115								X			
116							Y				
117								X	Y		
118								X			
119								X	Y		
120	X				X						
121										X	
122								X			
123								X			
124								X			

PM-10 POLICY AND GUIDANCE

Document Number	Determining Air Quality Status	Emissions Inventory	State Implementation Plans	Air Quality Monitoring & Data Usage	Air Quality Modeling	Stack Height Regulations	Control Strategies	General Provisions	Permit Requirements	Compliance and Enforcement	New Source Performance Standards
125				X	Y		X				
126				X	X			X			
127	X			X			X	X			
128	Y										
129								X			
130				X							
131		X						X			
132					X						
133	Y							X			
134	Y							X			
135				Y	Y			X	Y		
136					X						
137		X		X	Y		X	X			
138				Y							
139				X	X			X			
140										X	
141	X	X	X	Y	Y		Y	X		X	
142				Y	Y						
143								X			
144							X	X			
145					Y						
146								Y			
147								X			
148								X			
149								X			
150								X			
151								X			
152	Y										
153								X			
154		X		X	X			X			
155								X			

PM -10 POLICY AND GUIDANCE

Document Number	Determining Air Quality Status	Emissions Inventory	State Implementation Plans	Air Quality Monitoring & Data Usage	Air Quality Modeling	Stack Height Regulations	Control Strategies	General Provisions	Permit Requirements	Compliance and Enforcement	New Source Performance Standards
156	Y		Y					X			
157		X						X			
158								X			
159						X					
160	Y							X			
161								X		Y	
162										Y	
163	X	X		X				X			
164						Y					
165										X	
166								X	X		
167								X		X	
168						X					
169											X
170		X									
171							X	X			
172								X		X	
173				Y						Y	
174							X	Y		X	
175										Y	
176								X			
177						Y					
178							X				
179								X			
180	X										
181						Y					
182		X					Y	X			
183		X		Y	X		Y	X		X	
184					Y						
185								X			
186								Y			

PM-10 POLICY AND GUIDANCE

Document Number	Determining Air Quality Status	Emissions Inventory	State Implementation Plans	Air Quality Monitoring & Data Usage	Air Quality Modeling	Stack Height Regulations	Control Strategies	General Provisions	Permit Requirements	Compliance and Enforcement	New Source Performance Standards
187								X			
188								X	Y		
189								X		X	
190					Y						
191								X			
192							X	X			
193	X	X					X				
194								X			X
195								X			X
196								X			
197	X			Y				X			
198					Y			X			
199								X			
200								Y			
201								X			X
202					Y						
203								X			X
204								X			X
205		X									
206					Y			X			
207					Y			X			
208						Y					
209					Y						
210	X	X			X		Y	X		X	
211		X									
212								X			
213	X	X			X			X			
214		X			X			X		X	
215		X					Y			X	
216								X			
217		X		X			X			X	

PM-10 POLICY AND GUIDANCE

Document Number	Determining Air Quality Status	Emissions Inventory	State Implementation Plans	Air Quality Monitoring & Data Usage	Air Quality Modeling	Stack Height Regulations	Control Strategies	General Provisions	Permit Requirements	Compliance and Enforcement	New Source Performance Standards
218					X			X			
219	X							X			
220		X		X			X			X	
221		X									
222					Y						
223								X			
224								X			
225		X									
226	X										
227								X			X
228								X			
229	X			Y	Y		Y	X			
230				Y							
231	X	X		Y	X	X	X	X	Y		X
232					X		X				
233							X				
234	Y							X			
235		X									
236	Y							X			
237						Y					
238					Y		X	X			
239	Y							X	Y		
240	X							X			
241										Y	
242										Y	
243	Y							X			
244				Y							
245			X								
246		X					X				
247							X	X			
248	X							X			

PM-10 POLICY AND GUIDANCE

Document Number	Determining Air Quality Status	Emissions Inventory	State Implementation Plans	Air Quality Monitoring & Data Usage	Air Quality Modeling	Stack Height Regulations	Control Strategies	General Provisions	Permit Requirements	Compliance and Enforcement	New Source Performance Standards
249							X	X			
250								X			
251							X	X			
252										Y	
253								Y			
254	Y										
255	Y		Y				Y	Y	Y		
256							Y				
257								Y			
258									Y		
259	Y										
260								X			

X: References listed only in the compendium.

Y: References cited in the PM-10 guideline document and listed in the compendium.

U.S. Environmental Protection Agency
Region 5, Library
77 West Jackson Boulevard, 12th Floor
Chicago, IL 60604-3590