United States
Environmental Protection
Agency

Environmental Research
Laboratory
Athens GA 30613

EPA-600/3-83-005
March 1983

Research and Development

EPA

User's Manual for the Chemical Transport and Fate Model (TOXIWASP), Version 1

EPA-600/3-83-005

USER'S MANUAL FOR THE CHEMICAL TRANSPORT AND FATE MODEL TOXIWASP VERSION 1

by

Robert B. Ambrose, Jr., Sam I. Hill, and Lee A. Mulkey

Environmental Research Laboratory
U.S. Environmental Protection Agency
Athens, Georgia 30613

ENVIRONMENTAL RESEARCH LABORATORY
OFFICE OF RESEARCH AND DEVELOPMENT
U.S. ENVIRONMENTAL PROTECTION AGENCY
ATHENS, GEORGIA 30613

DISCLAIMER

This document has been reviewed in accordance with the U.S. Environmental Protection Agency's peer and administrative review policies and approved for publication. Mention of trade names or commercial products constitute endorsement or recommendation for use.

The TOXIWASP computer code has been tested against other computer programs to verify its computational accuracy. Nevertheless, errors in the code are possible. The U.S. Environmental Protection Agency assumes no liability for either misuse of the model or for errors in the code. The user should perform verification checks of the code before using it.

FOREWORD

As environmental controls become more costly to implement and the penalties of judgment errors become more severe, environmental quality management requires more efficient analytical tools based on greater knowledge of the environmental phenomena to be managed. As part of this Laboratory's research on the occurrence, movement, transformation, impact, and control of environmental contaminants, the Technology Development and Applications Branch develops management or engineering tools to help pollution control officials achieve water quality goals.

Concern about environmental exposure to synthetic organic compounds has increased the need for techniques to predict the behavior of chemicals entering natural waters as a result of the manufacture, use, and disposal of commercial products. A number of mathematical models have been developed to provide data on aquatic pollutant behavior from which exposure assessments can be made. The modeling technique described in this manual permits the user to examine the probability of exposure of receptor populations to a range of chemical concentrations for a specified location in stratified lakes and reservoirs, large rivers, estuaries, and coastal waters.

David W. Duttweiler
Director
Environmental Research Laboratory
Athens, Georgia

ABSTRACT

This manual describes the dynamic model TOXIWASP for simulating the transport and fate of toxic chemicals in water bodies. TOXIWASP combines the kinetic structure adapted from the EXposure Analysis Modeling System (EXAMS) with the transport framework provided by the Water Analysis Simulation Program (WASP), along with simple sediment balance algorithms. TOXIWASP formulates variable chemical degradation rates from chemical characteristics of a compound and the environmental parameters of the aquatic system. These rates combine calculated first order rates due to several processes, including hydrolysis, biolysis, photolysis, oxidation, and volatilization. Sorption onto sediments and onto biomass is calculated assuming local equilibrium, using a chemical specific partition coefficient, and spatially varying environmental organic carbon fractions.

TOXIWASP calculates total sediment and chemical concentrations explicitly every time step for every segment, including surface water, subsurface water, surface bed, and subsurface bed. Sediment concentrations are affected by advection, dispersion, mass loading, settling, scour, and in the bed, by burial and erosion. Chemical concentrations are affected by these same processes, plus degradation, sediment-water dispersion, and percolation. No lateral migration of chemical within the bed is allowed. Transport data must be specified based on monitoring data or predictions from hydrodynamic models.

TOXIWASP is designed to provide WASP users the capability for simple dynamic simulations of chemicals, particularly pesticides, which enter the aquatic environment in pulses that cannot be simulated with steady state models. It can be used for cases requiring more dynamic transport and loading capabilities than EXAMS, but less detailed and mechanistic sediment predictions than SERATRA. Its toxic chemical simulation capabilities are roughly equivalent to those in the Hydrologic Simulation Program in FORTRAN (HSPF). Although it is less applicable to upland streams and one-dimensional reservoirs than HSPF, TOXIWASP is more suited to stratified lakes and reservoirs, large rivers, estuaries, and coastal waters.

This manual gives an overview of the theory pertaining to TOXIWASP, then describes the program structure. Detailed data input instructions are given, followed by operating instructions and a glossary.

This report covers the period March 1, 1981 to November 1, 1982, and work was completed as of November 1, 1982.

CONTENTS

Disclaimer ii

Foreword iii

Abstract iv

Figures vii

Tables viii

Acknowledgments ix

1. Introduction 1
   1.1 Background 1
   1.2 Exposure Assessment 2
   1.3 Overview of this Manual 3

2. Model Capability and Theory 5
   2.1 Overview of TOXIWASP 5
   2.2 Sediment Transport Processes 8
   2.3 Chemical Partitioning (Sorption) Processes 10
   2.4 Bed-Water Chemical Redistribution Processes 13
   2.5 Bed Sedimentation and Erosion 17
   2.6 Transformation Processes 22
   2.7 Special Data Input Options 30
   2.8 Special Simulation Control Options 33
   2.9 Special Output Options 33
   2.10 Summary of TOXIWASP Capabilities 34

3. Model Mainline and Subroutine Overview 37
   3.1 Standard WASP Subroutines 37
   3.2 TOXIWASP Kinetic Subroutines 43

4. Preparation of Data Input 49
   4.1 Card Group A - Model Identification 52
   4.2 Card Group B - Exchange Coefficients 53
   4.3 Card Group C - Volumes 55
   4.4 Card Group D - Flows 56
   4.5 Card Group E - Boundary Conditions 59
   4.6 Card Group F - Forcing Functions 62
   4.7 Card Group G - Parameters 65
   4.8 Card Group H - Constants 67

CONTENTS (Continued)

4.9 Card Group I - Miscellaneous Time Functions..... 71
4.10 Card Group J - Initial Conditions..... 73
4.11 Card Group K - Stability and Accuracy Criteria..... 73
4.12 Card Group L - Intermediate Print Control..... 74
4.13 Card Group M - Integration Control Information..... 74
4.14 Card Group N - Display Parameters..... 75

5. Operational Considerations 83
5.1 Acqisition Procedures..... 83
5.2 Installation Procedures..... 83
5.3 Testing Procedures..... 83
5.4 Machine Limitations..... 84

References 85

Appendix 1, Glossary 87

Appendix 2, TOXIWASP Subroutine Listings 119

Appendix 3, TOXIWASP Support Software 158
3.1 Listing of TOXICMP.CMD 158
3.2 Listing of TOXITKB.CMD 159
3.3 Listing of JCL to Compile and Link Edit 161
3.4 Listing of TOXIC.BIS 161
3.5 Listing of JCL to Run Simulations 162
3.6 Listing of DAILYCVT 164
3.7 Listing of HSPFCVT 167
3.8 Listing of SWRVCVT 169
3.9 Listing of USGSCVT 171

Appendix 4, Listing of Input Data File 175

FIGURES

Number		Page
2-1	Examples of TOXIWASP Network Configurations	6
2-2	TOXIWASP Sediment Transport Processes	11
2-3	TOXIWASP Chemical Transport and Redistribution Processes .	15
2-4	TOXIWASP Sediment Burial	19
2-5	TOXIWASP Sediment Erosion	21
3-1	WASP Program Structure	38
3-2	Simplified WAS15-WASPB Flow Chart	42
3-3	TOXIWASPB Kinetic Subroutine Structure	44

TABLES

Number		Page
2-1	Concentration Related Symbols Used in Mathematical Equations	9
2-2	Structure of Auxiliary Flow and Nonpoint Source Load File 'DAILY.DAT'	32
4-1	Summary of Card Groups	50
4-2	Pen Plot Example	82

ACKNOWLEDGMENTS

Staff at the Athens Environmental Research Laboratory provided critical support for this project. Lawrence Burns provided useful discussions while we were adapting EXAMS kinetics to the WASP framework, and later in testing TOXIWASP against EXAMS (the final product, including any mistakes are, of course, our responsibility). Bruce Bartell, with Computer Science Corporation, drafted the figures by computer. Annie Smith typed quick, accurate drafts. Robert Ryans provided our technical editing. Sandra Ashe assisted in the tedious typing, copying, and other preparation chores.

SECTION 1
INTRODUCTION

1.1 BACKGROUND

TOXIWASP is a dynamic model for simulating the transport and fate of toxic chemicals in water bodies. Two state variables are simulated: organic chemical and total sediment. TOXIWASP was created by adapting the kinetic structure of the EXposure Analysis Modeling System (EXAMS) (Burns et al., 1982) to the transport framework provided by the Water Analysis Simulation Program (WASP) (DiToro et al., 1981), and adding simple sediment balance algorithms along with special input and output software. The result is a generalized chemical model that can be used for cases requiring more dynamic transport and loading capabilities than EXAMS, but less detailed and mechanistic sediment predictions than SERATRA (Onishi and Wise, 1982). The TOXIWASP chemical simulation capabilities are roughly compatible with those in the Hydrologic Simulation Program--FORTRAN (HSPF) (Johanson et al., 1980). HSPF is most applicable to upland streams and one-dimensional reservoirs, whereas TOXIWASP is more suited to stratified lakes and reservoirs, large rivers, estuaries, and coastal waters.

The main component of TOXIWASP is WASP, a dynamic compartment modeling program for aquatic systems. Time-varying transport, including forcing and boundary processes, advection, dispersion, and mass loading, are represented in this program. Water quality processes are represented in a special kinetic subroutine that is either chosen from a library or written by the user. WASP is structured to permit easy substitution of kinetic subroutines into the overall package to form a particular model. The model provided a sound basis for the rapid development of the TOXIWASP methodology. Indeed, versions of WASP have been used to examine PCB problems in the Great Lakes (Thomann, 1982; Richardson, et al., 1982).

The kinetic component of TOXIWASP was modified from EXAMS. From chemical characteristics of a compound and the environmental parameters of the system, EXAMS formulates a total transformation rate. This rate is based on a simple addition of the pseudo-first order rate constants due to each process. In TOXIWASP a kinetic derivative is calculated from this rate and passed to standard WASP subroutines, where it is integrated along with transport and loading derivatives to yield time-varying chemical concentrations for a specified spatial network. EXAMS uses a sophisticated kinetic structure that allows the study of five different ionic forms of a chemical, several ways to calculate photolysis, and other capabilities. It also has the user advantage of being interactive. In these respects, EXAMS was simplified and reduced for use in the TOXIWASP application. TOXIWASP pro-

vides the users of WASP with an expanded library of kinetic subroutines employing state-of-the-art chemical transformation techniques.

TOXIWASP allows the user to perform simple dynamic simulations of potentially toxic organic chemicals, particularly pesticides, that enter the aquatic environment in pulses that cannot be simulated with steady-state models. Dynamic simulations allow the consideration of pulse loads, the prediction of peak events, and an estimate of time-varying chemical exposure. TOXIWASP was created for use in exposure assessment.

1.2 EXPOSURE ASSESSMENT

Evidence of potentially harmful effects of pesticides and other toxic organic chemicals on aquatic organisms has led to intensive efforts toward environmental risk assessment for existing and new chemicals. The concept of risk reflects the likelihood or probability of causing such effects. Obviously, if an effect is induced, the organism affected must first have been exposed to the toxicant for a time period and intensity sufficient to inflict the damage. The study of this exposure, or exposure assessment, is defined as a quantitative evaluation of the concentration of chemical toxicants in contact with receptor populations within the various environmental media as the toxicant is released, transported, and transformed into, through and between environmental compartments.

The source of toxic chemicals in a river basin is an important factor in selection of techniques to analyze the problem. Toxic chemical releases may arise from both nonpoint sources such as agricultural fields from which pesticides are transported in runoff and point sources such as chemical manufacturing plants from which chemicals are discharged in effluent. Nonpoint sources are characterized by highly variable loadings with rainfall-runoff events often dominating the timing and magnitude of chemical inputs to the receiving waters. Point sources are usually much less varied and are often thought to provide steady inputs to the aquatic system. Clearly, exposure assessments for toxic chemicals in the aquatic environment must accommodate both the nonpoint or variable loading case and the point or steady loading case.

Chemical concentrations in aquatic environments are also determined by the transport and transformation processes that occur in river basins. As chemicals are transported by water or sediment, they are subject to a number of physical, chemical, and biological processes that can lead to either transport or transformation. The influence of transport on chemical behavior is determined by the local environmental regime (flow rates, sediment concentrations, etc.) and such chemical properties as the partition coefficient. Transformation processes are determined by chemical properties and by such environmental conditions as pH and temperature.

Exposure assessment as a part of risk evaluation implies the need to estimate probability of exposure. Exposure can be viewed as the realization of the joint probability of an ambient concentration and the existence of

receptor populations. The probability of ambient concentrations can be approximated by calculating their frequency of occurrence over a sufficient period of time. A convenient way to represent frequency is the cumulative distribution function (cdf). A cdf can be expressed as a graph of the concentrations (on the abcissa) exceeded for various fractions of a time period (on the ordinate). A cdf can be related to average expected return periods for different concentrations. Given the cdf for a specific chemical in a specific environment, one can, for example, say that once every 10 years the concentration of a specific chemical will exceed a specified level. The concentration level can then be related to biological effects information (e.g., LC_{50} values) and a return interval for damage (or risk) results. A cdf can readily be constructed given sufficient data in the form of time-series chemical concentrations. Rarely are any such data available, however, and when short time periods are sampled, the statistical reliability of the resulting data is always suspect. An alternative to field sampling is mathematical simulation with a dynamic model such as TOXIWASP.

If the user wishes, TOXIWASP produces a time-series of chemical concentrations at a segment that reflects daily changes in flow and loading, and seasonal changes in water temperature, light intensity, wind speed, pH, and POH. TOXIWASP cannot simulate stochastic variability or variability below the resolution of its time step, which is usually between one and twelve hours. Nevertheless, the cdf constructed by TOXIWASP for a specified location reflects the probability of exposure of local receptor populations to a range of chemical concentrations. For populations that can avoid locally high chemical concentrations, the problem of estimating exposure is more difficult. The spatial variability of peak concentrations must be examined to estimate the probability of avoidance. While TOXIWASP can provide the spatial variability during peak concentration events, users must convert this information to their own estimates of avoidance.

1.3 OVERVIEW OF THIS MANUAL

This manual documents the computer program TOXIWASP. It is meant to provide a convenient reference for the users of TOXIWASP. It is not meant to provide a tutorial on chemical simulation modeling. Nevertheless, an example input data file is provided in Appendix 4, and on the TOXIWASP distribution tape.

Following this introduction is a chapter on model capability and theory. This gives a summary of the equations solved in TOXIWASP, and short discussions of the sediment transport processes, the partitioning processes, the redistribution processes, the transformation processes, special data input options, control options, and output options.

Chapter 3 is an overview of the WASP and TOXIWASP subroutines. The descriptions of WASP subroutines are only slightly modified from the original WASP users manual.

Chapter 4 details the preparation of data input files. Data are organized into "card groups" A through N in the same format as the original

WASP users manual. Of course, "card group" can refer to a series of data records on a computer file.

Chapter 5 discusses such operational considerations as how to acquire TOXIWASP, how to install it on a computer and test it, and what its machine limitations are.

The first appendix is a glossary of all variables in TOXIWASP. This lists the type of variable (local, parameter, constant, time function), the subroutines where it is used, its definition, and its units. Also in the glossary is a list of abbreviations for commonly used units.

The second appendix gives source listings of the TOXIWASP subroutines. The third appendix gives listings of TOXIWASP support software. The fourth appendix gives a sample input dataset. All of these listings are available as files on the distribution tape.

A note on units may be helpful. WASP uses mixed English and SI units. For the general process equations in this document, we label dimensions following the M.L.T. system where M stands for mass, L stands for length, and T stands for time. Molarity is labelled by $\underline{M}$, and moles by n. For specific equations used in the TOXIWASP computer program, we label terms with specific units. CHEMW, for example, has units of mgc/l_w, or milligrams of chemical per liter of water. These specific units are defined in the glossary, starting on page 87.

SECTION 2
MODEL CAPABILITIES AND THEORY

All users of TOXIWASP should be familiar with and have access to the WASP user's manual. WASP theory will only be considered where necessary to explain differences between EXAMS and WASP. This section is intended to provide an overview of the capabilities provided by the new toxics subroutines in TOXIWASP. This section is not intended to supplant the detailed documentation of kinetic process theory available in the EXAMS manual. That documentation is too large and exhaustive to be included here. The user who has questions is referred to this excellent source.

2.1 OVERVIEW OF TOXIWASP

TOXIWASP is a dynamic chemical and sediment model that can be applied to water quality problems in streams, lakes, reservoirs, estuaries, and coastal waters. It uses the compartment modeling approach whereby segments can be arranged in a one-, two-, or three-dimensional configuration, as in Figure 2-1. Pollutant transport is based on user-specified flow and dispersive mixing between segments. All parameters and forcing functions may vary in space and time. TOXIWASP calculates time-varying water quality concentrations using an explicit, backward difference numerical solution to the mass flux form of the one dimensional advective-dispersive equation:

$$\frac{\Delta M_j}{\Delta t} = \sum_{i=1}^{n} [Q_{ij}C_i + E_{ij}A_{ij}(\frac{\Delta C}{L})_{ij}] + W_j - KV_j \qquad (1)$$

where M = constituent mass
C = constituent concentration, ML^{-3}
Q = water flow, L^3T^{-1}
E = longitudinal dispersion, L^2T^{-1}
A = cross-sectional area, L^2
L = characteristic mixing length, L
W = mass loading, MT^{-1}
K = kinetic degradation or transformation rate, $ML^{-3}T^{-1}$
V = segment volume L^3
j = segment number
i = adjacent segments
ij = interface between segment j and adjacent segments i

TOXIWASP was created from WASP by adding a set of subroutines that calculate chemical degradation (the last term in equation 1) and that

Figure 2-1
Examples of TOXIWASP Network Configurations

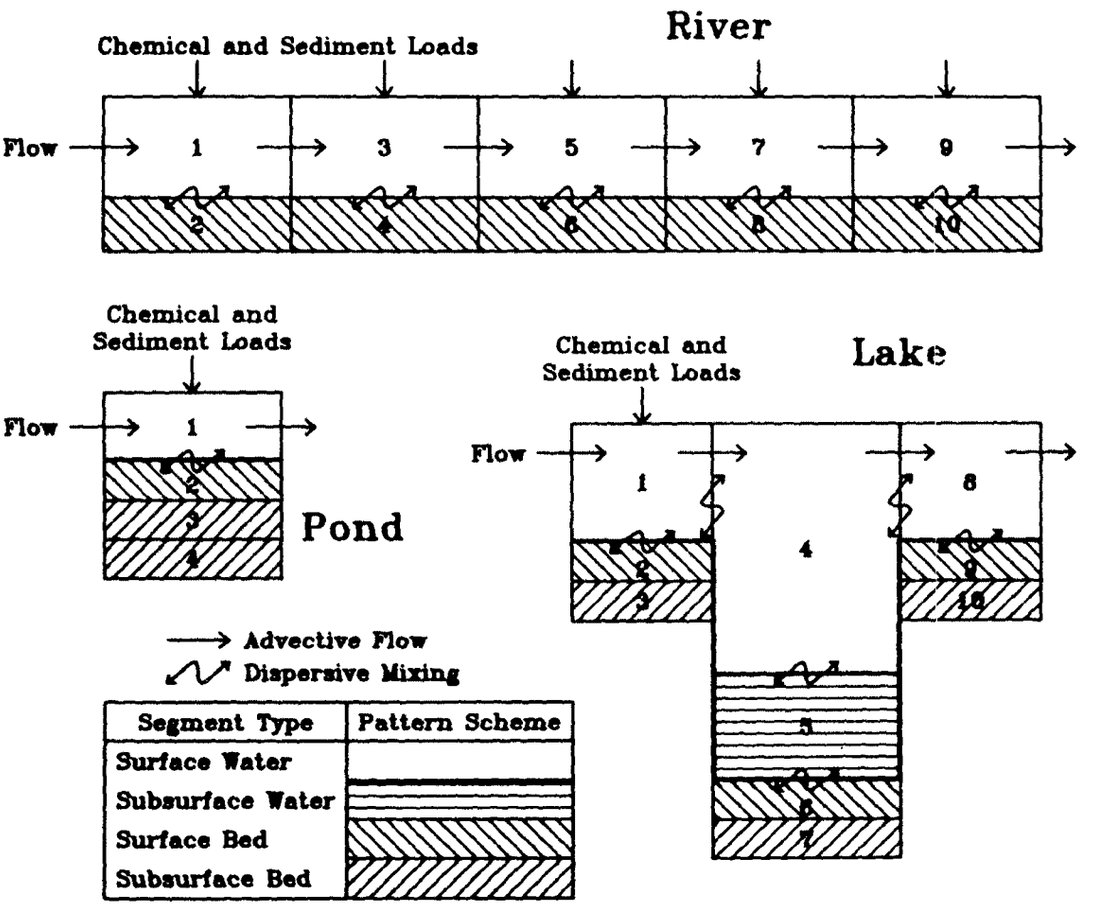

calculate special bed sediment transport processes such as sediment-water dispersive exchange, pore water percolation, and net burial-scour. The two differential equations solved by TOXIWASP for water-borne chemical and sediment, written in the general concentration form, are:

$$\frac{\partial C_1}{\partial t} = u \frac{\partial C_1}{\partial x} + \frac{\partial}{\partial x}\left(E \frac{\partial C_1}{\partial x}\right) + \frac{W_1}{V} - K + \dot{S}_1 \qquad (2a)$$

$$\frac{\partial C_2}{\partial t} = u \frac{\partial C_2}{\partial x} + \frac{\partial}{\partial x}\left(E \frac{\partial C_2}{\partial x}\right) + \frac{W_2}{V} + \dot{S}_2 \qquad (2b)$$

where C_1 = concentration of chemical, ML^{-3}
C_2 = concentration of suspended sediment, ML
u = flow velocity of water, LT^{-1}
W_1 = mass loading of chemical, MT^{-1}
W_2 = mass loading of sediment, MT^{-1}
$\dot{S}_1$ = net exchange of chemical with bed, $ML^{-3}\ T^{-1}$
$\dot{S}_2$ = net exchange of sediment with bed, $ML^{-3}\ T^{-1}$
x = longitudinal distance, L
t = time, T
M_s = mass of sediment

From chemical characteristics of a compound and the environmental parameters of the system, TOXIWASP formulates a total transformation rate. This rate is based on a simple addition of the pseudo-first order rates for hydrolysis, oxidation, biolysis, volatilization, photolysis, and other processes. Sorption onto sediments and onto biomass is calculated assuming local equilibrium, using a chemical specific partition coefficient, and spatially varying environmental organic carbon fractions.

TOXIWASP applies equations 2a and 2b, in the form of equation 1 to calculate sediment and chemical concentrations for every segment, including surface water, subsurface water, surface bed, and subsurface bed. Sediment is assumed to be a conservative constituent that is advected and dispersed among water segments and that can settle to and scour from bed segments.

In a simulation, the chemical undergoes first-order decay, based on summation of several process rates, some of which are second-order. The effective first order decay rate can vary with time, then, and is recalculated as often as necessary throughout a simulation. The chemical is advected and dispersed among water segments and can be transported to the bed by sorption onto sediment and subsequent settling, or by dispersive mixing between the top bed layer and the bottom water layer. Within the bed, the chemical can migrate downward or upward through percolation and pore water diffusion. No lateral migration of the chemical within the bed is allowed.

Because the kinetic transformation processes are all expressed in terms of first-order rates, large loadings may cause problems by changing the characteristics of the systems. An example noted in the EXAMS manual is a chemical subject to alkaline hydrolysis that kills the biological component, making the system less alkaline, and thus reducing the alkaline hydrolysis degradation rate. It is the responsibility of the user to anticipate these problems and look for cases where they might happen. The task of keeping track of all possible ecosystem variables is too complex, and would occupy too much computer space for TOXIWASP. Therefore, feedback phenomena are not considered.

TOXIWASP, like EXAMS, is based on the following assumptions.

1. All segments are well mixed.
2. Sorption is an essentially instantaneous process within each segment (thus local equilibrium).
3. Chemical properties of the compound can be coupled with the characteristics of the environment to formulate a pseudo-first-order rate for each of the degradation processes using primarily mechanistic equations.
4. Pseudo-first-order rates combine linearly to form a total degradation rate for the chemical toxicant in each segment.

It should be noted that TOXIWASP, like WASP, requires the user to specify the flow field. Flows can be based on measurements, simple continuity calculations, or on other hydrodynamic models. WASP does not check the flow field for inconsistencies that may lead to mass balance errors. The user should take care to check the specified flows for errors.

In the following development it is convenient to define concentration related symbols as in Table 2-1.

2.2 SEDIMENT TRANSPORT PROCESSES

Sediment transport is an important process in hydraulics and river mechanics, but its role in pollutant transport is not fully known. Several investigators (Karickhoff et al., 1979; Rao and Davidson, 1980) have shown that for most organic toxicants, particularly non-polar compounds, the sediment organic matter determines the extent of sorption and hence the importance of sorbed-pollutant transport. The particle size of the sediments is influential, but Rao and Davidson (1980) have shown that the organic matter content of each size fraction is the controlling factor. Organic matter content and surface area relationships suggest that silt and clay size sediment fractions are most relevant in sediment transport. One outcome of this rationale is the idea that, in river systems, wash load or suspended sediment is the important pollutant transport medium rather than bed load. If bed load transport can be ignored, the problem remains to estimate suspended sediment. In general, the stream transport capacity for wash load is in excess, and the problem is one of estimating sediment source loading--namely, watershed erosion. Thus, the key sediment-related term in equation 2b is the source term, W_2.

Table 2.1. Concentration Related Symbols
Used in Mathematical Equations

Symbol	Definition	Units
C, C_1	Concentration of chemical (bed or water).	mgc/l_T
C_w	Concentration of dissolved chemical in water.	mgc/l_T
C_w'	Concentration of dissolved chemical in water. $C_w' = C_w/\phi$	mgc/l_w
C_s	Concentration of sorbed chemical in water.	mgc/l_T
C_s'	Concentration of sorbed chemical in water. $C_s' = C_s/S_w$	mgc/kgs
C_p	Concentration of dissolved chemical in bed (pore water).	mgc/l_T
C_p'	Concentration of dissolved chemical in bed (pore water). $C_p' = C_p/\phi$	mgc/l_w
C_b	Concentration of sorbed chemical in bed.	mgc/l_T
C_b'	Concentration of sorbed chemical in bed. $C_b' = C_b/S_b$	mgc/kgs
C_2	Concentration of sediment (bed or water).	mgs/l_T
S	Concentration of sediment (bed or water). $S = C_2 * 10^{-6}$	kgs/l_T
S'	Concentration of sediment (bed or water). $S' = S/\phi$	kgs/l_w
S_w	Concentration of sediment in water.	kgs/l_T
S_b	Concentration of sediment in bed.	kgs/l_T
ϕ	Porosity or volume water per volume segment.	l_w/l_T
π	Partition coefficient of chemical on sediment.	l_w/kgs

TOXIWASP treats sediment as a single size fraction that is advected and dispersed in the water and that settles (and deposits) at a constant, spatially-variable velocity. Sediment is returned from the bed to the water column through a spatially-variable scour (or erosion) velocity. Thus the net exchange of sediment with the bed, S_2 in Equation 2b, is calculated as

$$\dot{S}_2 = \frac{W_s S_b}{L_b} - \frac{W_d S_w}{L_w} \tag{3}$$

where W_s = scour (erosion) velocity of bed sediment, LT^{-1}
W_d = deposition velocity of suspended sediment, LT^{-1}
L_b = depth of active bed sediment layer, L
L_w = depth of water layer, L

Nonzero values for $\dot{S}_2$ will lead to net sedimentation or erosion. The consequences of chemical burial or release are discussed in Section 2.5.

Settling and scour velocities are read in using the parameter WS(J). Sediment transport processes are illustrated in Figure 2-2.

2.3 CHEMICAL PARTITIONING (SORPTION) PROCESSES

The interaction of dissolved organic toxicants with entrained sediment is an important process that must be accounted for mathematically. If one assumes sorption is kinetically a first order process, then a rate equation similar to the other expressions can be written as:

$$\frac{R_s}{S} = k_s C'_w - k_d C'_s \tag{4}$$

where R_s = net rate of chemical transfer between dissolved and sorbed state, $ML^{-3}T^{-1}$ (typically mgc/l_T-hour)
k_s = rate constant for sorption, $L^3M^{-1}T^{-1}$ (typically l_w/kgs-hour)
k_d = rate constant for desorption, T^{-1} (typically per hour)

If one assumes $R_s = 0$ then

$$k_s C'_w = k_d C'_s$$

or

$$C'_s = \frac{k_s}{k_d} C'_w \tag{5}$$

Note that equation 5 is the linear form of the Freundlich isotherm with the ratio k_s/k_d being the distribution (or partition) coefficient (sometimes denoted as "π"). This coefficient is a function of characteristics of both the toxicant and the sediments onto which sorption has occurred. Many organic pollutants of current interest are non-polar, hydrophobic compounds whose π values correlate quite well with the organic fraction of the sediment. Rao and Davidson (1980) and Karickhoff et al. (1979) have developed

Figure 2-2
TOXIWASP Sediment Transport Processes

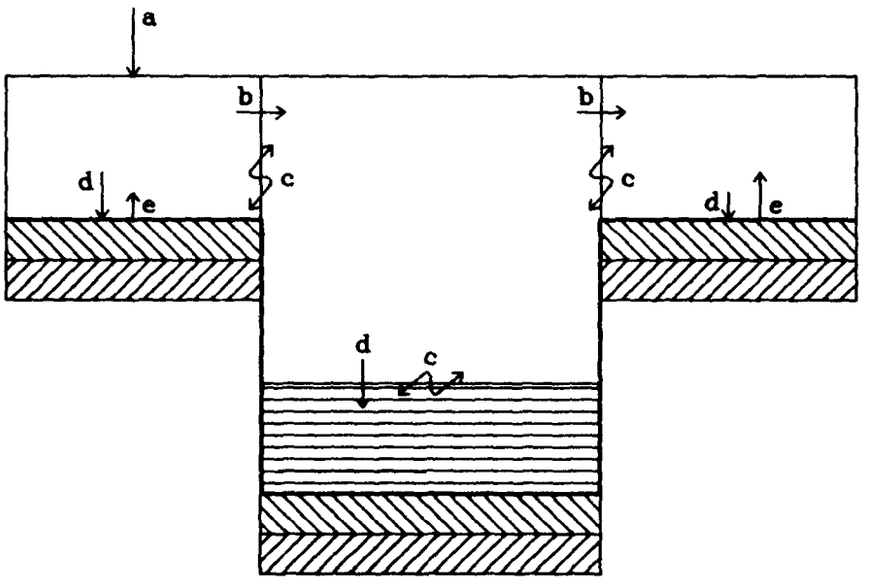

Process	Segment Types
a) Mass Loading	1,2 to Water
b) Advection	1,2 Water-Water
c) Dispersion	1,2 Water-Water
d) Settling	1,2 Water-Water or Water-Bed
e) Erosion	3 Surface Bed-Water

empirical expressions relating equilibrium coefficients to laboratory measurements leading to fairly reliable means of estimating appropriate values.

EXAMS assumes sorption and ionization to be essentially instantaneous and considers them to be equilibrium processes. The model allows for three sorption possibilities (dissolved, sediment sorbed, and biota sorbed) and for four ionic species in addition to the unionized form. To conserve computer space, TOXIWASP only considers the three sorption possibilities for the unionized form of the chemical. As EXAMS notes, not all possible forms of a chemical will exist. The specific fractions (1,2,3) of the chemical in each form, ALPHA, are calculated for each compartment based on 12 segment parameters, constants, and state variables:

$$\text{ALPHA(1)} = \frac{1}{1 + KP * S/FRW + KB * B/FRW} = \alpha_1 \tag{6}$$

$$\text{ALPHA(2)} = \frac{KP * S/FRW}{1 + KP * S/FRW + KB * B/FRW} = \alpha_2 \tag{7}$$

$$\text{ALPHA(3)} = \frac{KB * B/FRW}{1 + KP * S/FRW + KB * B/FRW} = \alpha_3 \tag{8}$$

where KP = partition coefficient of the chemical on the sediment (l_w/kgs) = KOC * OCS(J) = π
KB = partition coefficient of the chemical with biota (l_w/kgb) = KOC * OCB
S = concentration of sediment, kgs/l_T
B = concentration of biomass, kgb/l_T
FRW = porosity of segment (water volume/total volume) = $\emptyset$

Based on the definitions for ALPHA, the following relationships hold:

$$\text{CHEM1} = \text{CHEM*ALPHA(1)} = C * \alpha_1 \tag{9}$$
$$\text{CHEM2} = \text{CHEM*ALPHA(2)} = C * \alpha_2 \tag{10}$$
$$\text{CHEM3} = \text{CHEM*ALPHA(3)} = C * \alpha_3 \tag{11}$$
$$\text{CHEM} = \text{CHEM1} + \text{CHEM2} + \text{CHEM3} = C(\alpha_1 + \alpha_2 + \alpha_3) \tag{12}$$

where CHEM = total chemical concentration in segment, mgc/l_T
CHEM1 = chemical dissolved in water phase of segment, mgc/l_T
CHEM2 = chemical sorbed onto sediment phase of segment, mgc/l_T
CHEM3 = chemical sorbed onto biological phase of segment, mgc/l_T

CHEM1, CHEM2, and CHEM3 are transformed into the following more common units for reporting:

$$\text{CHEMW} = \text{CHEM1/FRW} = C * \alpha_1/\emptyset \tag{13}$$
$$\text{CHEMS} = \text{CHEM2/S} = C * \alpha_2/S \tag{14}$$
$$\text{CHEMB} = \text{CHEM3/B} = C * \alpha_3/B \tag{15}$$

where CHEMW = chemical dissolved in water phase of segment, mgc/l_w
CHEMS = chemical sorbed onto sediment phase of segment, mgc/kgs
CHEMB = chemical sorbed onto biological phase of segment, ugc/$g_{biomass}$ (same as mgc/kgb)

2.4 BED-WATER CHEMICAL REDISTRIBUTION PROCESSES

An important, but poorly quantified, set of processes governs chemical exchange between the bed and the water column. A chemical may sorb onto suspended sediments and settle to the bed, or sorb directly to the bed surwhen water concentrations are high. When water concentrations are low, the chemical may desorb from the bed surface. Turnover of the bed surface due to physical or biological processes should accelerate this sorption-desorption process. Diffusion of pore water into overlying water will also exchange dissolved chemicals. Percolation of pore water will move dissolved chemical up through the bed into the water column; infiltration can leach chemical down through the bed.

So even though bed load transport per se may be relatively unimportant in pollutant transport, interaction between the stream bed and the overlying water should not be ignored. Concentration gradients between the bed material and the overlying water will result in sorption and desorption and thus the stream bed can act either as a sink or a source of contaminants. For the stream bed one can write the dissolved and particulate chemical conservation equations:

$$\frac{\partial C_p}{\partial t} = \frac{\partial}{\partial y}\left(D^b \frac{\partial C_p}{\partial y}\right) - \frac{\partial (U_p C_p)}{\partial y} - R_s - K \qquad (16a)$$

$$\frac{\partial C_b}{\partial t} = \frac{\partial}{\partial y}\left(D^{bs} \frac{\partial C_b}{\partial y}\right) - \frac{W_s C_b}{L_s} + \frac{W_d C_s}{L_w} + R_s - K \qquad (16b)$$

where D^b = vertical dispersion coefficient for dissolved chemical, L^2T^{-1}
D^{bs} = vertical dispersion coefficient for sorbed chemical, L^2T^{-1}
U_p = velocity of net pore water movement into or out of the bed, LT^{-1}
W_d, W_s = deposition and scour velocity of sediment between bed and water column, LT^{-1}
L_w = depth of water compartment, L
L_s = depth of active bed layer, L
y = vertical distance, L

Equation 16a accounts for diffusion-dispersion and pore water transport of pollutants between the bed and the overlying water column. Equation 16b accounts for sediment-bound transport by including the scour and deposition terms, W_s and W_d. Estimation usually requires a rigorous treatment of hydrodynamic forces and characterization of sediments (e.g., cohesiveness). Several approaches are available for this purpose, but many chemical exposure models either omit these processes entirely or lump them into an overall calibrated dispersion or exchange coefficient.

Comparing equations 16a and 16b with equation 2a reveals that $\dot{S}_1$, the net exchange of chemical from the bed to the water column, is a summation of several processes. These include pore water diffusion and percolation, bed sediment dispersion (due to physical mixing and bioturbation), scour and deposition, and direct sorption-desorption.

In TOXIWASP, the subroutines TOXISETL and TOXISEDW handle the redistribution terms in equations 2a, 2b, 16a, and 16b. The processes are illustrated in Figure 2-3. The settling velocity W_d in equations 2a and 16b is a spatially variable parameter for suspended sediment and sorbed chemical. The scour velocity W_s in equation 16b is a spatially variable parameter for bed sediment and sorbed chemical. Both are read and stored in the input parameter WS(J). The pore water velocity U_p in equation 16a is another spatially variable parameter, read into WS(J) as flow. Values stored in WS(J) are interpreted as settling velocities for water segments, scour velocities for surface bed segments, and pore water flows for subsurface bed segments.

Another fundamental redistribution process in equation 16a is pore water diffusion. Its rate is controlled by the vertical concentration gradient and the vertical diffusion coefficient D^b. When processes other than molecular diffusion are acting in the bed, D^b is interpreted as a dispersion coefficient, and its value is higher. The vertical dispersion of sorbed chemical is represented by D^{bs} in equation 16b. TOXIWASP reads D^b as the spatially variable dispersion parameter E(I) in card group B. D^{bs} is related to D^b through the spatially-variable multiplier DSPSED(J). Where only pore water diffusion is active, DSPSED(J) is set equal to 0. In actively mixed areas, DSPSED(J) is equal to 1.

Because these processes are poorly quantified and variable in space and time, most chemical models now take a largely empirical approach to sediment-water exchange. HSPF and SERATRA describe the exchange as linear sorption-desorption between dissolved chemical in the overlying water and organic sediment in the bed:

$$EXCH = RSED * KT\ [KPB * C'_w - C'_b] \qquad (17a)$$

where EXCH = mass exchange, MT^{-1}
RSED = bed sediment mass (upper layer), M
KT = sorption-desorption rate, T^{-1}
KPB = partition coefficient of the chemical onto bed sediment (l_w/kgs)

EXAMS and TOXIWASP describe sediment-water exchange as a dispersion process:

$$EXCH = DISPV\ (C'_p - C'_w) + DSPSED*DISPV*S'*\left(C'_b - C'_s * \frac{KPB}{KPW}\right) \qquad (17b)$$

where DISPV = volumetric fluid dispersion, L^3T^{-1} (MCF_w/day)
DSPSED = spatially variable sediment turnover ratio = f_s (1.0 in EXAMS)
KPW = partition coefficient of the chemical onto sediment in the water column (l_w/kgs)

Figure 2-3
TOXIWASP Chemical Transport and Redistribution Processes

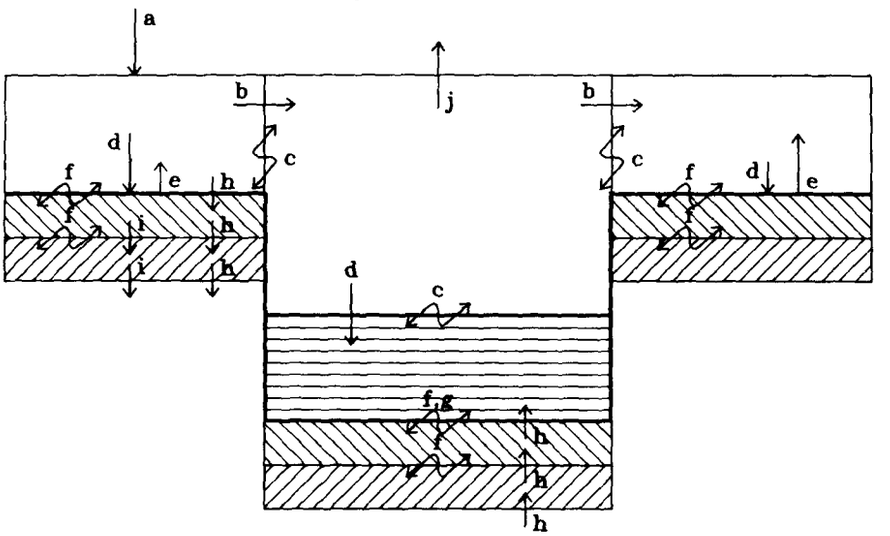

Process	Segment Types
a) Mass Loading	1,2 to Water
b) Advection	1,2 Water–Water
c) Dispersion	1,2 Water–Water
d) Settling	1,2 Water–Water or Water–Bed
e) Erosion	3 Surface Bed–Water
f) Pore Water Diffusion	3,4 Surface Bed–Water or Bed–Bed
g) Sediment Turnover	3 Surface Bed–Water
h) Percolation	4 Bed–Bed or Bed–Water
i) Sedimentation	4 Bed–Bed
j) Volatilization	1 Surface Water

The volumetric dispersion varies spatially, and is calculated by:

$$DISPV = \frac{SCALE * D^b * A_s * FRW}{L_c} \qquad (18a)$$

where D^b = vertical pore water dispersion coefficient, L^2T^{-1}
A_s = surface area, L^2
FRW = porosity, or volumetric fraction of pore water in the bed
L_c = characteristic mixing length, L
SCALE = units conversion factor

Because TOXIWASP and EXAMS assume local equilibrium between dissolved and sorbed phases of a chemical in each segment, equation 17b can be rewritten:

$$EXCH = DISPV * \frac{1 + KPB * S'}{KPB} * [C'_b - KPB * C'_w] \qquad (18b)$$

where DSPSED is set equal to 1.0.

Equation 17a is in the same form as equation 18b, and so the HSPF-SERATRA sorption-desorption rate can be equated with the EXAMS-TOXIWASP dispersion rate by equating RSED * KT with $DISPV * [\frac{1 + KPB * S'}{KPB}]$ and solving:

$$KT = \frac{SCALB * D^b * A_s}{BVOL * L_c} * \frac{1 + KPB * S'}{KPB * S'} \qquad (19)$$

where BVOL = EXAMS-TOXIWASP bed volume, L^3
SCALB = unit conversion factor (=2.584 x 10^{-4} when E = m^2/hr, A = ft^2, L_c = ft, BVOL = ft^3 x 10^6).
RSED = BVOL * S' * FRW

For chemicals with high partition coefficients, the last term in equation 22 is approximately 1.0, simplifying the expression.

Although the basic sediment-water exchange mechanisms are mathematically equivalent, each model has its own elaborations. The exchange rates are spatially variable in EXAMS and TOXIWASP, and these models include percolation of pore water. TOXIWASP adds spatially variable sediment turnover ratios, spatially variable net bed scour rates, and settling of suspended sediment. HSPF and SERATRA simulate three sediment size fractions. Scour-deposition and settling are calculated as dynamic processes. SERATRA adds multiple sediment layers, which can be added through deposition or subtracted through erosion. HSPF allows spatially variable sorption-desorption rates. All these mathematical formulations are limited by the lack of good, thorough data necessary to validate the models on a site-specific basis.

TOXISEDW was inserted to calculate sediment-water exchange in a manner similar to EXAMS. Bedload-water column interaction is a complex and only partially understood problem. TOXIWASP handles the interaction in the

following manner. When a fraction of the bed sediment compartment (sediment plus pore water) is mixed into the water column, the sediment immediately comes into equilibrium with the chemical in the overlying water compartment, then is returned to the bed. The pore water is exchanged with an equal amount of overlying water. The rate of exchange is based on DISPV, the volume exchange rate. DISPV is calculated for each sediment-water interface "I" from the dispersion rate, BR(I), which is calculated from parameters in Card Group B:

$$BR(I) = E(I)*A(I)/[(IL(I)+JL(I))/2.)*(5280**2)*1.E-06] \quad (20)$$

$$DISPV(I) = \text{CONVERSION FACTOR} * BR(I) * FRW \quad (21)$$

where BR(I) = volumetric dispersion rate for segment interface "I", L^3T^{-1} (MCF/day for water-water interface, mixed units for sediment-water interface)

E(I) = dispersion coefficient for segment interface "I", L^2T^{-1} (mi^2/day for water-water interface, cm^2/sec for sediment-water interface)

A(I) = surface area of segment interface "I", L^2 (ft^2)

IL(I),JL(I) = characteristic mixing lengths for segments with respect to interface "I", L (ft)

DISPV(I) = volumetric pore water dispersion for sediment-water interface "I", L^3T^{-1} (MCF_w/day)

BR(I) is calculated from equation 20 in WASP2. For sediment-water interfaces, BR(I) is converted to DISPV(I) by equation 21 in TOXISEDW, then set to 0. Actual sediment-water mass exchange is then calculated each time step by equation 17b. The parameter DSPSED allows the user to control the relationship between pore water diffusion and sediment turnover. If DSPSED is set to 0.0 for a segment, only pore water diffusion occurs. If DSPSED is set to 1.0, the sediment turnover volume is equal to the pore water diffusion volume.

2.5 BED SEDIMENTATION AND EROSION

The chemical redistribution processes in Equations 16 and 17 and Figure 2-3 operate in reference to a fixed bed. When sediment deposition (W_dS_w/L_w) exceeds sediment scour (W_sS_b/L_s), however, net deposition can leads to a rising bed surface and burial of sorbed chemical. When sediment scour exceeds sediment deposition, net erosion can lead to a falling bed surface and release of previously buried sorbed chemical. In this section, the term "sedimentation" will refer to net sedimentation or erosion.

A simple method for treating sedimentation is to define bed segment locations in reference to the rising or falling bed surface. If the bed surface rises at W cm per year, then buried chemical descends through the bed at W cm per year in reference to the rising bed segments (all other bed dispersion processes being ignored for the moment). There are two complications in this approach. First, if the density of the bed increases

with depth, then compression must be occuring, decreasing W and squeezing the pore water and dissolved chemical upward. Second, the simulation time step is extremely short in relation to the net sedimentation velocity. This leads to rather severe "numerical dispersion," a form of computational inaccuracy with in the bed.

To handle the first complication, TOXIWASP assumes two types of bed sediment: an upper uncompacted layer with bulk density S_b, and lower, compacted layers with bulk density S_ℓ. Assuming that sedimentation is in equilibrium with net deposition, all bed properties remain constant. The sediment mass addition is:

$$\dot{M} = \left(\frac{W_d S_w}{L_w} - \frac{W_s S_b}{L_s}\right) V_s \tag{22}$$

where $\dot{M}$ = sediment mass added to bed, MT^{-1}
V_s = volume of the upper layer, L^3, equal to $A_s L_s$
A_s = sediment surface area, L^2

The volume of sediment added to the upper layer is M/S_b, while the volume added to the lower layer is M/S. The difference in volumes is equal to the pore water volume squeezed out through compaction. The rise in the bed surface equals the volume added to the lower layer divided by the surface area:

$$W = \frac{\dot{M}}{A_s S_\ell} = W_d \frac{L_s}{L_w} \frac{S_w}{S_\ell} - W_s \frac{S_b}{S_\ell} \tag{23}$$

The amount of chemical lost from the upper bed layer due to sedimentation is:

$$V_s \frac{\partial C}{\partial t} = -WA_s S_\ell C'_b - WA_s \left(\frac{S_\ell}{S_b} - 1\right) C'_p \tag{24}$$

where the first term represents sorbed chemical buried downward and the second term represents dissolved chemical squeezed upward.

TOXIWASP implements a version of this simple approach that amounts to a Lagrangian scheme for treating movement of chemical through the bed due to sedimentation. The time step for sedimentation is calculated internally, based on the scour and deposition rates. Whereas the simulation time step is on the order of hours, the sedimentation time step is on the order of months to years. The sedimentation time step varies with location and time and is tailored to minimize numerical dispersion in sedimentation calculations.

For locations where sediment deposition exceeds scour, TOXIWASP responds as in Figure 2-4. As sediment and sorbed chemical settle from the water column, the top bed segment increases in volume, depth, chemical mass, and sediment mass. Its density remains constant. When the sediment mass in the top bed segment equals the initial sediment mass in the top two bed segments, then sediment compression is triggered. At this time the top bed segment depth (and volume) exceeds the initial top two bed segment depths (and

Figure 2-4 TOXIWASP Sediment Burial

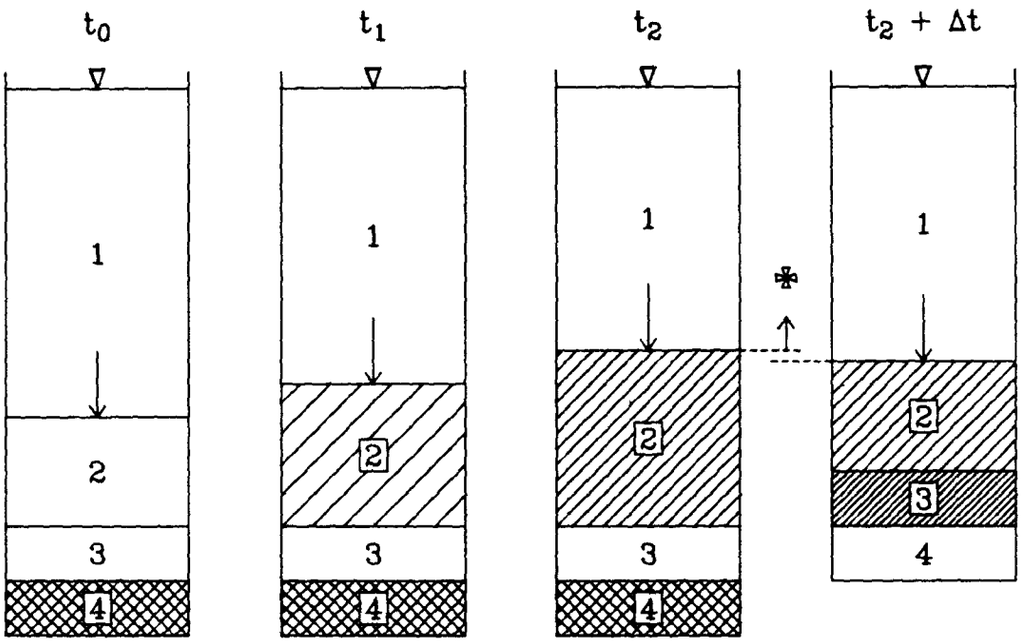

	Time = t_0			Time = t_2			Time = $t_2 + \Delta t$		
Segment	Depth	Density	Conc	Depth	Density	Conc	Depth	Density	Conc
1	d_1	1.0	$C_1(0)$	$d_1-d_2(2)$	1.0	$C_1(2)$	d_1-d_3	1.0	$C_1(2)$
2	d_2	ρ_2	0.0	$d_2(0)+d_3\frac{\rho_3}{\rho_2}$	ρ_2	$C_2(2)$	d_2	ρ_2	$C_2(2)$
3	d_3	ρ_3	0.0	d_3	ρ_3	0.0	d_3	ρ_3	$C_2(2)\frac{\rho_3}{\rho_2}$
4	d_3	ρ_3	$C_4(0)$	d_3	ρ_3	$C_4(0)$	d_3	ρ_3	0.0

✤ Compaction: SVOL Compacted = $\text{Vol}(3)\left[\frac{\rho_3}{\rho_2} - 1\right]$

Pore water volume SVOL squeezed into water column.

volumes) as indicated in Figure 2-4. The top bed segment is now compressed into two segments.

The new top bed segment has the same depth, volume, and sediment mass as the initial top bed segment. The new second bed segment has the same depth, volume, and sediment mass as the initial second bed segment. (In fact, these properties of lower bed segments always remain constant.) The combined volume of the top two bed segments is now slightly less than the volume of the top bed segment just before compression. This volume represents pore water squeezed into the water column during compression. Chemical mass in the top two bed segments equals the chemical mass in the top bed segment just before compression minus the dissolved chemical mass in the pore water squeezed into the water column. Whereas chemical concentration remains constant in the top bed segment during the compression step, concentration increases in the new second bed segment where compression actually occurs.

Although this sedimentation algorithm minimizes numerical dispersion, it does lead to discontinuous concentration histories in lower bed segments as their locations are redefined. For "smoother" output with slightly higher numerical dispersion, TOXIWASP can recalculate sedimentation ten times per sedimentation time step. The user can adjust this ratio by altering the value of "FAC" (Constant 53) from 0.1.

The compression step does not affect any of the properties of the lower bed segments. In fact, even chemical concentration is unaffected at the third bed segment and below. Immediately following compression, however, TOXIWASP renumbers the lower bed segments, dropping the old bottom segment from the simulation. Chemical layers, then, are transferred downward intact and finally lost through the bottom. The accumulated mass lost through the bottom is saved and printed as variable BMASS(J), where "J" is the number of the bottom segment. Compression and renumbering completes the TOXIWASP sedimentation cycle (or time step).

For locations where sediment scour exceeds deposition, TOXIWASP responds as in Figure 2-5. As sediment and sorbed chemical erode from the bed, the top bed segment decreases in volume, depth, chemical mass, and sediment mass. Its density remains constant. When the sediment mass in the top bed layer equals zero, then segment renumbering is triggered. All the properties of the remaining bed segments, including chemical concentration, remain unaffected by renumbering. The new top bed segment, for example, has the same depth, volume, sediment and chemical concentration as the old second bed segment. A new bottom bed segment is created with the same physical properties as the other bed segments. Its chemical concentration, however, is zero. Renumbering and creation of a new bottom segment completes the TOXIWASP erosion cycle (or time step).

As a consequence of how TOXIWASP treats sedimentation, certain constraints are imposed on the bed segment properties defined in the input data set. The density (or sediment concentration) of a top bed segment (TYPEE = 3) must be greater than or equal to the density of the lower bed segments (TYPEE = 4) within a vertical stack. The volumes, depths, and densities of

Figure 2-5 TOXIWASP Sediment Erosion

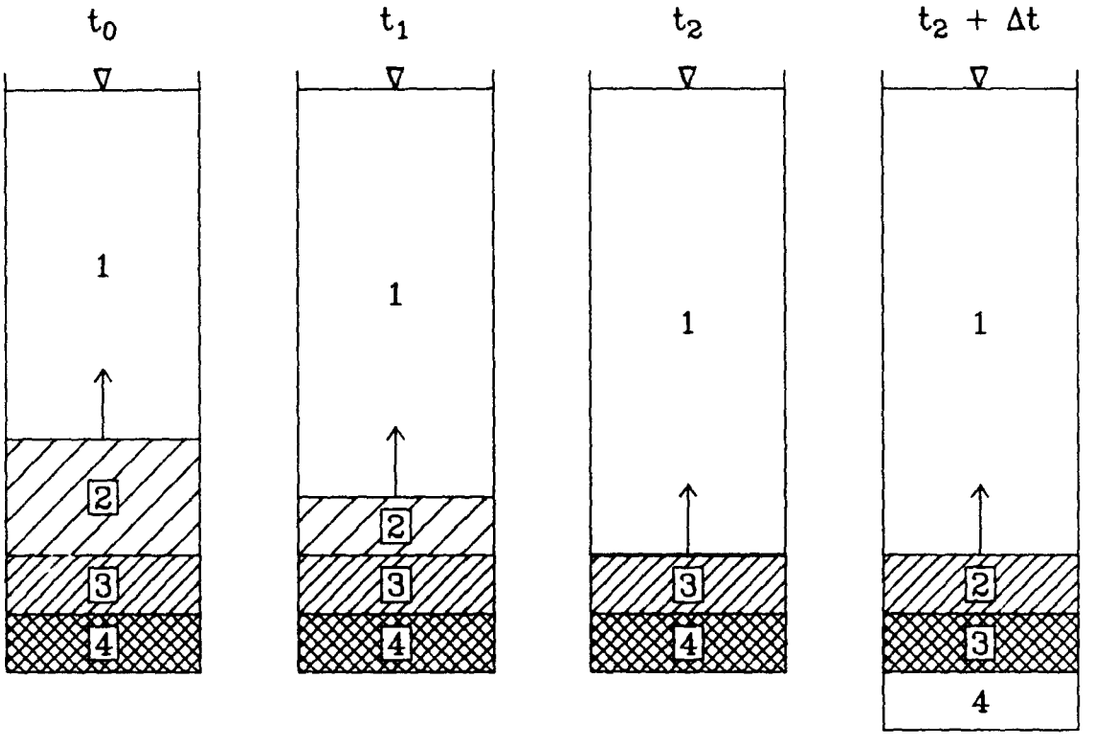

	Time = t_0			Time = t_2			Time = $t_2 + \Delta t$		
Segment	Depth	Density	Conc	Depth	Density	Conc	Depth	Density	Conc
1	d_1	1.0	0.0	$d_1+d_2(0)$	1.0	$C_1(2)$	$d_1+d_2(0)$	1.0	$C_1(2)$
2	d_2	ρ_2	$C_2(0)$	0	ρ_2	$C_2(0)$	d_3	ρ_3	$C_3(2)$
3	d_3	ρ_3	$C_3(0)$	d_3	ρ_3	$C_3(0)$	d_3	ρ_3	$C_4(2)$
4	d_3	ρ_3	$C_4(0)$	d_3	ρ_3	$C_4(0)$	d_3	ρ_3	0.0

lower bed segments must be constant within a vertical stack. If a smooth representation of burial is desired, the volumes and depths of lower bed segments should be significantly smaller than the top bed layer.

If lower bed segments are not included in a TOXIWASP network, then chemical burial will not take place. The upper bed layer will increase in volume and depth with settling, or decrease in volume and depth with scour. TOXIWASP prevents both complete filling of the water column and complete erosion of the bed.

2.6 TRANSFORMATION PROCESSES

The rate equation for the transformation term K in equations 1, 2a, 16, and 17 cannot be specified in a general form. Depending on the process under consideration, many variables may be influencing the rate, leading to a multi-term and often non-linear relationship. The problem becomes tractible, however, when it is assumed that the rates are first order with respect to the pollutant concentration for given environmental conditions, leading to

$$K = \sum_{j=1}^{n} k_j C \qquad (25)$$

where K = total transformation rate, $ML^{-3}T^{-1}$
k_j = pseudo-first order rate constant for the jth process, which can vary in space and time, T^{-1}
n = number of processes operating on chemical

This first-order assumption is generally accepted to be accurate for most chemicals at environmental concentrations. The assumption is invalid at concentrations near the solubility limit, however. EXAMS does not allow simulations where predicted chemical concentrations exceed one half of the solubility limit. TOXIWASP does not automatically abort such runs. If the user sets CMAX(1) in Card Group K to zero, however, TOXIWASP will abort the simulation if concentrations become high enough to violate the first-order assumption. This is accomplished by setting CMAX(1) to one half of the solubility or 10^{-5} M, whichever is less. In any case, the user should analyze results and consider whether this and other assumptions are valid.

Only rarely does the simple mathematical form of equation 25 provide a rigorous description of the kinetics of pollutant degradation in aquatic systems. But if the influencing variables that lead to more complex expressions are reasonably constant for a specific situation then the influence can be lumped into the single value, k_j. The problem of calculating kinetic transformation then becomes one of calculating the rate constants k_j from chemical properties and environmental characteristics.

Several investigators have reported processes that influence pesticides (Mackay and Leinonen, 1975; Paris et al., 1975; Wolf et al., 1975; Wolf et al., 1977; Zepp et al., 1975). Smith et al. (1977) have identified the major pathways that lead to transformation of organic pollutants in the aquatic

environment. The role of these processes is receiving increasing attention and laboratory protocols for related measurements have been developed (Mill et al., 1982). The general processes identified include hydrolysis, photolysis, oxidation, microbial degradation, and volatilization. TOXIWASP calculates the individual rate constants k_j for each of these processes. Theory and assumptions are summarized below.

2.6.1 Hydrolysis

Hydrolysis, or reaction of the chemical with water, is known to be a major pathway for degradation of many toxic organics. Because hydrolysis can be influenced by pH, the appropriate rate constant, k_h, is written as

$$k_h = k_a[H^+] + k_n + k_b[OH^-] \quad (26)$$

where k_h = net hydrolysis rate constant, T^{-1}
k_a, k_b = specific acid and base catalyzed rate constants, respectively, $L^{3n-1}T^{-1}$
k_n = neutral rate constant, T^{-1}

Estimates for k_a, k_b, and k_n can be determined from laboratory studies completed over a range of pH values (Mill et al., 1982). The remaining unknowns in equation 26 can be determined from pH measurements taken in the aquatic system under investigation or from data from simulations.

In TOXIWASP, hydrolysis by specific-acid-catalyzed, neutral, or specific-base-catalyzed pathways is considered for dissolved, sorbed, and biosorbed chemical. Nine second-order rate constants are read-in and modified based on pH and pOH of the compartment. Hydrolysis, like oxidation, has paired inputs (ENHG, etc.) that allow calculating or modifying the rates based on the temperature-based Arrhenius function. For example if KNHG = 2.38E-4 and ENHG = 0.0, then the value of KNHG would be used. Alternately, if values of ENHG = 20 and KNHG = 11.02 were used, at a temperature of 25°C, KNHG = 2.36E-4/hr. The value, however, would then change if the water temperature changed.

2.6.2 Photolysis

Photolysis rate constants are dependent upon both intensity of solar radiation and structure of the compound (Smith et al., 1977; Zepp and Cline, 1977). This relationship can be written as

$$k_p = \phi_p \Sigma \varepsilon_\lambda L_\lambda \quad (27)$$

where k_p = net photolysis rate constant, T^{-1}
ϕ_p = reaction quantum yield, moles per einstein
ε_λ = absorption coefficient of the toxicant at wavelength λ, per cm per mole
L_λ = parameter proportional to incident solar energy flux at wavelength λ, einsteins per square cm per day

For most natural waters, adjustments must be made for light extinction (Mill et al., 1982) as follows.

$$k_p = \phi_p \Sigma \epsilon_\lambda L_\lambda \quad [\frac{1 - 10^{-\alpha_\lambda \ell}}{\alpha_\lambda \ell}] \tag{28}$$

where α_λ = attenuation coefficient of radiation of wavelength λ in water, L^{-1}
ℓ = depth of water, L

TOXIWASP calculates photolysis for water compartments by means of the subroutine PHOTO1 from EXAMS. PHOTO1 uses an average first order rate constant measured for near surface waters during cloudless conditions:

$$k_p = k_{p1} [L] \sum_{i=1}^{3} \phi_{pi} \alpha_i \tag{29}$$

where k_{p1} = average first-order photolytic rate constant for water surface during cloudless conditions in summer, day^{-1}
ϕ_{pi} = average reaction quantum yield for compound in form "i" (dissolved, sorbed, biosorbed), moles per einstein
[L] = fraction of cloudless summer surface light intensity in segment, unitless:

$$= (\frac{1-e^{-K_e \ell \ D_f}}{K_e \ell \ D_f}) * (1 - .056 \text{ CLOUDG}) * \text{FACTOR} * \text{LIGHTN}$$

K_e = segment light extinction coefficient, per meter
D_f = ratio of optical path length to vertical depth
CLOUDG = average cloud cover, tenths
.056 = cloud type reduction factor (altostratus to altocumulus)
FACTOR = latitude correction factor
LIGHTN = normalized time function for light, representing diurnal or seasonal changes (0-1.0)

At the heart of this photolysis methodology are two principles. First, the intensity of light in the water column decreases exponentially as a function of depth according to the Beer-Lambert Law. The second principle involves "reaction quantum yields," the efficiency of the reactions in the pollutant due to absorption of electromagnetic radiation. The "reaction quantum yield" is actually one of several such yields. Although a molecule activated by light can undergo several transformations, we are solely interested in the disappearance yield, that is, the change from parent compound to daughter compounds.

2.6.3 Oxidation

In aquatic systems, chemical oxidation of organic toxicants can be a consequence of interactions between free radicals and the pollutants. Free radicals can be formed as a result of photochemical reactions. Free radicals that have received some attention in the literature include alkylperoxy radicals, $RO_2\cdot$; OH radicals; and singlet oxygen. The oxidation process is modeled as a second order process:

$$R_{ox} = k_{ox} [RO_2\cdot] \cdot C \qquad (30)$$

where R_{ox} = net oxidation rate, $ML^{-3}T^{-1}$
$[RO_2\cdot]$ = molar concentration of oxidant, nL^{-3}
k_{ox} = second order oxidation rate constant, $L^3n^{-1}T^{-1}$

It should be noted that chemical oxidation is a result of a number of sequential and competing reactions.

Because of the large number of alkylperoxy radicals that potentially exist in the environment, it would be impossible to obtain estimates of k_{ox} for each species. Mill et al. (1982) propose estimation of a rate coefficient using t-butyl hydroperoxide as a model oxidizing agent. They argue that other alkylperoxides exhibit similar reactivities to within an order of magnitude.

In addition to estimating a rate coefficient, an estimate of free radical concentrations must be made to completely define the expression for free radical oxidation. Mill et al. (1982) report RO_2 concentrations on the order of 10^{-9} M and OH concentrations on the order of 10^{-17} M for a limited number of water bodies. Zepp et al. (1977) report an average value on the order of 10^{-12} M for singlet oxygen in water bodies sampled. The source of free radicals in natural waters is photolysis of naturally occurring organic molecules. If a water body is turbid or very deep, free radicals are likely to be generated only near the air-water interface, and consequently, chemical oxidation will be relatively less important. In such cases, the concentrations cited above are appropriate in only the near-surface zones of water bodies.

Oxidation can be very important in an ecosystem. Like photolysis, oxidation is driven by sunlight and is an important mechanism for pollutant transformation. Through the interaction of sunlight, humic materials, and dissolved oxygen, chemical oxidants can accelerate the transformation of chemicals that may not be directly sensitive to sunlight. TOXIWASP handles this by coupling second order rate constants for dissolved, sorbed, and biosorbed chemical with a user entry of the oxidants in the ecosystem. It corrects this on the basis of temperature. Several studies are cited in the EXAMS manual in which the steady-state oxidant concentrations (mole/liter) in natural waters are on the order of E-9 for peroxy radicals, E-13 for singlet oxygen, and E-17 for hydroxyl radicals in near surface waters. Because these

concentrations are presumably functions of solar flux, light extinction effects may also need to be calculated. These can be calculated similarly to the method used in TOXIPHOT.

2.6.4 Microbial Degradation or Biolysis

Rate expressions for microbial degradation in aquatic systems must account for the concentration of microbes present, i.e., a second-order rate expression usually written as

$$R_{bac} = k_{bac} C_{bac} C \tag{31}$$

where R_{bac} = net microbial degradation rate, $ML^{-3}T^{-1}$
k_{bac} = second-order bacterial rate constant, $L^{-3}M^{-1}T^{-1}$
C_{bac} = concentration of the bacteria, ML^{-3}

The use of k_{bac} as defined in equation (31) follows from the Michaelis-Menten equation as follows:

$$\mu = \mu_{max} \frac{C}{K_m + C} \tag{32}$$

where μ = specific bacterial growth rate, T^{-1}
μ_{max} = maximum specific bacterial growth rate, T^{-1}
K_m = half saturation constant, ML^{-3}

Bacterial growth is related to chemical substrate degradation with the yield coefficient Y:

$$R_{bac} = \frac{1}{Y} \mu C_{bac} \tag{33}$$

where Y = yield coefficient, mass biomass produced per mass of chemical degraded

If $K_m >> C$ (usually the case at environmentally observed concentrations) then we can define k_{bac} as

$$k_{bac} = \frac{\mu_{max}}{YK_m} \tag{34}$$

and equation 31 results. Practical utilization of equations 31-34 is fraught with uncertainties and often one is left with the problem of estimating $k_{bac}C_{bac}$ as a single value for the system under investigation.

In TOXIWASP biolysis is a process rate based on equation 31, where six second order rate constants are entered for dissolved, sorbed, and biosorbed chemicals in the water and in the bed. TOXIWASP bases this calculation on the concept that population size is an adequate measure of the microbial community's capacity to degrade the toxicant. Temperature effects are considered by use of the parameter BIOTMG, which is separated from

environmental temperature to allow weighting to match observed data. ACBACG, the proportion of cells actually degrading the toxicant, is another means of weighting results.

The biolysis kinetics used in TOXIWASP are not as mathematically complex as the Monod function or other well known techniques. The simpler approach is desirable for several reasons. One is that less computer time is needed to solve the first-order rate equations. Also, for all but very rare cases, the toxicant is not going to be the predominant substrate for feeding the microorganisms. In these rare cases, the treatment used here is less acceptable. Yet another reason for simplification is the experimental error introduced in measuring populations of microorganisms. In short, these processes are not yet well defined. Thus, TOXIWASP allows several methods to correct rates to reflect field data.

2.6.5 Volatilization

Another process that removes organic pollutants from the aquatic system is volatilization. Volatilization is not a transformation process *per se* because the mass of the parent compound is preserved but it can be lumped into the transformation terms. Volatilization is usually modeled as

$$R_V = k_V \left(C_W - \frac{C_g}{H}\right) \tag{35}$$

where R_V = net volatilization transfer rate, $ML^{-3}T^{-1}$
H = Henry's law constant
C_g = concentration of the chemical in the bulk gas phase, ML^{-3}
k_V = mass transfer coefficient divided by the average depth of the water body, T^{-1}

In most cases, the concentrations of organic toxicants in the atmosphere are much lower than the partial pressures equilibrated with the organic concentration in water. Consequently, equation 35 can be approximated by

$$R_V = k_V C_W \tag{36}$$

The value of k_V, the mass transfer coefficient, depends on the intensity of turbulence in a water body and in the overlying atmosphere. Mackay and Leinonen (1975) have discussed conditions under which the value of k_V is primarily determined by the intensity of turbulence in the water. As the Henry's law coefficient increases, the mass transfer coefficient tends to be increasingly influenced by the intensity of turbulence in water. As the Henry's law coefficient decreases, the value of the mass transfer coefficient tends to be increasingly influenced by the intensity of atmospheric turbulence.

Because Henry's law coefficient generally increases with increasing vapor pressure of a compound and generally decreases with increasing solubility of a compound, highly volatile low solubility compounds are most likely to exhibit mass transfer limitations in water and relatively nonvolatile high solubility compounds are more likely to exhibit mass transfer limitations in the air. Volatilization is usually of relatively less magnitude in lakes and reservoirs than in rivers and streams.

In cases where it is likely that the volatilization rate is regulated by turbulence level in the water phase, estimates of volatilization can be obtained from results of laboratory experiments. As discussed by Mill et al. (1982), small flasks containing a solution of a pesticide dissolved in water that have been stripped of oxygen can be shaken for specified periods of time. The amount of pollutant lost and oxygen gained through volatilization can be measured and the ratio of mass transfer coefficients for pollutants and oxygen can be calculated. As shown by Tsivoglou and Wallace (1972), this ratio should be constant irrespective of the turbulence in a water body. Thus, if the reaeration coefficient for a receiving water body is known or can be estimated and the ratio of the mass transfer coefficient for the pollutant to reaeration coefficient has been measured, the pollutant mass transfer coefficient can be estimated.

In TOXIWASP, volatilization is the first process considered when the segment loop is entered. Only the unionized, dissolved molecular form of a chemical in a water compartment with an air interface can be volatilized. The volatilization calculation procedure used is based on the two-resistance principle.

The two-resistance method assumes that two "stagnant films" are bounded on either side by well mixed compartments. Concentration differences serve as the driving force for the water layer diffusion. Pressure differences drive the diffusion for the air layer. From mass balance considerations it is obvious that the same mass must pass through both films, thus the two resistances combine in series. There is actually yet another resistance involved, the transport resistance between the two interfaces, but it is assumed to be negligible. This may not be true in two cases: very turbulent conditions and in the presence of surface active contaminants. Although this two-resistance method, the Whitman model, is rather simplied in its assumption of uniform layers, it has been shown to be as accurate as more complex models. Laboratory studies of volatilization of organic chemicals confirm the validity of the method as an accurate predictive tool (EXAMS, sec. 2.3.2).

The volatilization rate constant k_v is calculated as follows:

$$k_v = \frac{1/L_w}{\text{RESLIQ} + \text{RESGAS}} \tag{37}$$

$$\text{RESLIQ} = \frac{1}{\text{KO2L} * \text{KVOG}} \quad \text{or} \quad \frac{1}{\text{KO2L}\ \sqrt{32/\text{MWTG}}} \tag{38a}$$

$$RESGAS = \frac{1}{\frac{H * WAT\sqrt{18/MWTG}}{TKEL * 8.206E\text{-}5}} \qquad (38b)$$

KO2L = reaeration velocity in segment, meters per hour
KVOG = measured liquid phase transport resistance, ratio
MWTG = molecular weight of compound
WAT = piston velocity of water vapor, meters per second
= .1857 + 11.36 * WIND
WIND = local, time varying wind speed, meters per second
TKEL = water temperature, degrees Kelvin
8.206E-5 = gas constant

While EXAMS requires that reaeration velocity KO2G(J) be specified, TOXIWASP calculates flow-induced reaeration in subroutine TOXIREOX based on the Covar method (Covar, 1976). This method calculates reaeration as a function of velocity and depth by one of three formulas, Owens, Churchill, or O'Connor-Dobbins, respectively:

$$K20 = 27.6*AVVELE^{0.67}/AVDEPE^{0.85} \qquad (39a)$$
$$K20 = 14.8*AVVELE^{0.969}/AVDEPE^{0.673} \qquad (39b)$$
or $$K20 = 16.4*AVVELE^{0.5}/AVDEPE^{0.5} \qquad (39c)$$

where K20 = reaeration velocity at 20°C, cm/hr
AVVELE = average segment velocity, ft/sec
AVDEPE = average segment depth, ft

The Owens formula is automatically selected for segments with depth less than 2 feet. For segments deeper than 2 feet, the O'Connor-Dobbins or Churchill formula is selected based on a function of depth and velocity. Deeper, slowly moving rivers select O'Connor-Dobbins, while moderately shallow, faster moving streams select Churchill.

Whenever the volatilization rate is calculated during a simulation, wind-induced reaeration is determined by

$$K20 = -0.46 * WINDSG + .136 * WINDSG^2 \qquad (40)$$

where WINDSG = time-varying wind velocity, meters/sec

A minimum value of 2 cm/hr is imposed on K20. Windspeed affects reaeration, then, above 6 meters/sec. The reaeration velocity used to compute volatilization is either the flow-induced reaeration or the wind-induced reaeration, whichever is larger. Segment temperatures are used to adjust K20 by the standard formula

$$KO2L = 0.01 * K20 * 1.024^{(TCELG - 20.)} \qquad (41)$$

where KO2L = segment reaeration rate, meters/hour
TCELG = segment temperature, °C

2.7 SPECIAL DATA INPUT OPTIONS

For some simulation problems, flows and mass loadings are quite variable. Pesticides, in particular, typically enter streams in pulse loadings associated with runoff events and increased stream flows. To generate accurate frequency predictions in such situations, both flows and loads should be specified with more precision than is convenient with the standard WASP input options.

TOXIWASP provides a special option that causes the input of daily-average flows and loadings from an auxiliary file. When the constant LOPT is set to 1.0, TOXIWASP will read Unit 91 at the beginning of each new simulation day. Unit 91 is an unformatted sequential file named 'DAILY.DAT' in the PDP version. For the IBM version, Unit 91 is named in the JCL. Flows from Unit 91 replace any flows that may have been read in Card Group D. Mass loadings from Unit 91, however, are added to those read in Card Group F. Loads from Card Group F are considered point source loads, while those from Unit 91 are considered nonpoint source (NPS) loads.

Unit 91 can contain either flows, nonpoint source loads, or both. The first four variables read are NWKS, MQOPT, MOQ, and SCALQ. NWKS is the number of nonpoint source loads. If NWKS is 0, the NPS load input section is bypassed. MOQ is the number of flows. If MOQ is 0, the flow input section is bypassed. SCALQ is a scale factor to convert flows to cubic feet per second (cfs). Daily NPS loads must already be in pounds per day. MQOPT, a flow option, is read but not used.

If daily flows are to be read, the second set of variables on Unit 91 defines the segment flow pairs. MOQ segment flow pairs are read. Each flow pair K consists of the upstream segment, JQ(K), and the downstream segment IQ(K). Positive flows travel from JQ(K) to IQ(K). The Fortran Read Statement in TOXIWASP is:

```
READ(91)((JQ(K),IQ(K),K = 1, MOQ)
```

If daily flows are not to be read, this set of variables should not appear on Unit 91.

The rest of Unit 91 contains daily flows and/or NPS loads. At the beginning of each new day, NPS loads of chemical and sediment are read for each of NWKS input segments. These segments must be in the order defined by Card Group F. The Fortran Read Statement in TOXIWASP is:

```
READ(91)((NPSWK(I,J),I = 1,2), J=1, NWKS)
```

where NPSWK (1,J) is NPS chemical load in lb/day and NPSWK (2,J) is NPS sediment load in lb/day. If NWKS is 0, this set of variables should not appear on Unit 91.

Next, flows are read for each of MOQS flow pairs. The flows must be in the order defined by the second set of variables on Unit 91. The Fortran Read Statement in TOXIWASP is:

```
READ(91)(BQ(K),K=1,MOQ)
```

where BQ(K) is the flow from JQ(K) to IQ(K) in cfs. If MOQS is 0, this set of variables should not appear on Unit 91.

The contents of Unit 91 are summarized on Table 2-2. Simple programs can be written to produce this file. The following software for the PDP computer is available to construct a proper Unit 91 file.

DAILYCVT - This program converts flows and loadings from user specified files into an unformatted, sequential file for input to TOXIWASP. The user is queried for the load file name and format, and the flow file name and format. The indicated files are read and data are written to the file DAILY.DAT in the proper sequence.

HSPFCVT - This program converts an HSPF plot file to a formatted WASP file with NPS loads. The user is queried for segment numbers and associated acreage for which the HSPF unit loads apply. The user then enters the beginning and ending date. The HSPF file is read, and data are written to the file WASPLD.DAT. This file can be prepared for input to TOXIWASP using DAILYCVT.

SWRVCVT - This program converts a SWRV plot file to a formatted WASP file with NPS loads. It is equivalent to HSPFCVT. The SWRV file is read, and data are written to the file WASPLD.DAT. This file can be prepared for input to TOXIWASP using DAILYCVT.

Some simulation problems require detailed, time-varying flows and volumes. For these, WASP has been modified to accept hydrodynamic data generated by the Stormwater Management Model (SWMM), receiving water block (RECEIV), program SWFLOW (see Huber, et al., 1975). The network for SWFLOW must be equivalent to the network for WASP (i.e., the SWFLOW junctions, or nodes, are the same as the WASP segments). Hydrodynamic data from SWFLOW are stored on Unit 92, and read by WASP through subroutine SWFLOW. To invoke this option, both IVOPT and IQOPT in Card Groups C and D should be set to 4. The water quality time step specified in the SWFLOW hydrodynamic simulation is automatically used in the WASP simulation.

Table 2-2. Structure of Auxiliary Flow and Nonpoint Source Load File 'DAILY.DAT'

Condition	Day	Contents*+
	0	NWKS,MQOPT,MOQ,SCALQ
MOQ > 0	____	JQ(1),IQ(1),JQ(2),IQ(2),...,JQ(MOQ),IQ(MOQ)
NWKS > 0	1	NPSWK(1,1),NPSWK(2,1),NPSWK(1,2),...,NPSWK(2,NWKS)
MOQ > 0	____	BQ(1),BQ(2),...,BQ(MOQ)
NWKS > 0	2	NPSWK(1,1,NPSWK(2,1),NPSWK(1,2),...,NPSWK(2,NWKS)
MOQ > 0	____	BQ(1),BQ(2),...,BQ(MOQ)
	.	
	.	
	.	
	____	
NWKS > 0	TEND	NPSWK(1,1),NPSWK(2,1),NPSWK(1,2),...,NPSWK(2,NWKS)
MOQ > 0	____	BQ(1),BQ(2),...,BQ(MOQ)

* Data written sequentially.

\+ The following variables are integers: NWKS, MQOPT, MOQ, JQ, IQ. All other variables are real (floating point) numbers.

2.8 SPECIAL SIMULATION CONTROL

For seasonal or multiyear simulations, the environmental conditions affecting chemical transformation rates change slowly relative to the simulation time step. Consequently, it is inefficient to recalculate the chemical transformation rates every time step, or even every day. TOXIWASP recalculates the total transformation rate at constant intervals specified by the user. The time interval between rate computations is given by the constant TDINT. To investigate seasonal variability, the user may specify TDINT of 15 or 30 days. To investigate diurnal variability, the user may specify TDINT equal to a short time step of, say, 0.05 day. A TDINT value of 0 is automatically set to a very large number. Rates are calculated the first time step only, and are held constant throughout the simulation.

The user can specify the total chemical transformation rates with the spatially variable parameter TOTKG(J). If TOTKG(J) is positive for a segment, rate calculations are bypassed for that segment. Specified rates are constant throughout the simulation. It is possible to specify rates for some segments and have TOXIWASP calculate rates for the remaining segments. If TOTKG(J) is 0 for a segment, TOXIWASP calculates a rate and stores it (as a negative number) until the next recalculation TDINT days later.

WASP requires the user to specify simulation time steps, which can vary throughout the simulation. Three problems can occur. If the time step is too large, computational instability develops and halts the simulation. If the time step is too small, numerical dispersion builds up and leads to inaccuracies. A small time step is also inefficient and leads to high costs. The optimal time step varies inversely with flow and dispersion, and directly with segment size:

$$TRT = \frac{VOL}{TQ + TR} \tag{42}$$

where TRT = optimal time step for segment, days
VOL = volume of segment, MCF
TQ = total flow through segment, MCF/day
TR = total dispersive exchange, MCF/day

For irregular networks with unsteady flow, TRT varies both spatially and with time. If the constant DTOPT is set to 1.0, TOXIWASP calculates the optimal time steps TRT for the network and selects the minimum to avoid instability. TRTs are recalculated every time step for flow options 2 and 3, and every day for the special flow input option through Unit 91.

2.9 SPECIAL OUTPUT OPTIONS

Standard output from WASP is limited to regular intervals, which must be approximately ten days apart for a year's simulation. For problems with variable mass loadings, this output can miss significant concentration

events. TOXIWASP allows the user to have peak events printed out. Two constants must be specified. The first is the reference concentration CTRIG. The second is the reference segment XJTR. Whenever concentrations rise above CTRIG in segment XJTR, special event printout is triggered. Chemical concentrations for all segments are printed out every three hours until the event ends. If CTRIG is set to 0.0, this special event printout is skipped.

For many problems, statistical summaries are the most convenient form of output. The use of the cumulative distribution function (cdf) to estimate frequency for exposure assessment was discussed in Section 1.2. When a reference segment XJTR is designated, TOXIWASP builds a file containing the time history of chemical concentrations at that segment and the top benthic segment below it. Total, dissolved, sediment-sorbed, and biosorbed chemical concentrations are written to the file every three hours throughout the simulation. Following the simulation, this file is processed by program TOXIFREQ and subroutine TOXIORDR to obtain statistical summaries. Two tables are printed. The first describes the frequency distribution with the mean, standard deviation, skewness, kurtosis, and select percentiles. The second gives the cumulative frequencies at intervals of 0.02.

2.10 SUMMARY OF TOXIWASP CAPABILITIES

The following finite difference equations summarize the capabilities of TOXIWASP. They refer to segments 3 and 4 of the river shown in Figure 2-1. The symbols used are defined in the appropriate sections of this chapter, with subscripts added to indicate segment number. $C_{2,3}$, for example, revers to sediment concentration (C_2) in segment 3. Subscripts separated by a dash refer to the interface between two segments. Q_{1-3}, for example, refers to the flow between segments 1 and 3. Subscript "k" refers to the chemical form: dissolved, sorbed, or biosorbed. $\alpha_{k,j}$, then, refers to the fraction of chemical of form "k" in segment "j", and $\alpha_{2,4}$ is the sorbed fraction in segment 4.

Solids in Segment 3 of River

$$V_3 \frac{dC_{2,3}}{dt} = Q_{1-3} C_{2,1} - Q_{3-5} C_{2,3} \qquad \text{Advection (2.1)}$$

$$+ E_{1-3} A_{1-3} \frac{C_{2,1} - C_{2,3}}{L_{1-3}} - E_{3-5} A_{3-5} \frac{C_{2,3} - C_{2,5}}{L_{3-5}} \qquad \text{Dispersion (2.1)}$$

$$+ W_{2,3} \qquad \text{Mass Loading (2.1)}$$

$$+ \frac{W_{s,4} C_{2,4}}{L_{b,4}} - \frac{W_{d,3} C_{2,3}}{L_{w,3}} \qquad \text{Scour, Deposition (2.2)}$$

Chemical in Segment 3 of River

$$V_3 \frac{dC_{1,3}}{dt} = Q_{1-3}C_{1,1} - Q_{3,5}C_{1,3}$$ Advection (2.1)

$$+ E_{1-3}A_{1-3} \frac{C_{1,1}-C_{1,3}}{L_{1-3}} - E_{3-5}A_{3-5} \frac{C_{1,3}-C_{1,5}}{L_{3-5}}$$ Dispersion (2.1)

$$+ W_{1,3}$$ Mass Loading (2.1)

$$+ \frac{W_{s,4}C_{2,4}}{L_{b,4}} * \frac{C_{1,4}\ \alpha_{2,4}}{C_{2,4}}$$ Scour (2.2, 2.4)

$$- \frac{W_{d,3}C_{2,3}}{L_{w,3}} * \frac{C_{1,3}\ \alpha_{2,3}}{C_{2,3}}$$ Deposition (2.2, 2.4)

$$+ D^b_{3-4}\ A_{3-4}\ [\frac{C_{1,4}\ \alpha_{1,4} - C_{1,3}\ \alpha_{1,3}}{L_{3-4}}]$$ Pore Water Diffusion (2.4)

$$+ D^b_{3-4}\ A_{3-4} * f_{s,4} * \frac{C_{2,4}}{\phi_4} * [\frac{C_{1,4}\ \alpha_{2,4}}{C_{2,4}} - \frac{C_{1,3}\ \alpha_{2,3}}{C_{2,3}} * \frac{\pi_4}{\pi_3}]$$ Direct Sorptive Exchange with Bed Surface (2.4)

$$+ U_{p,4}[\frac{C_{1,4}\ \alpha_{1,4}}{\phi_4} \text{ or } \frac{C_{1,3}\ \alpha_{1,3}}{\phi_3}]$$ Percolation or Infiltration (2.4)

$$- [\sum_{k=1}^{3} (k_{a,k}[H^+]_3 + k_{n,k} + k_{b,k}[OH^-]_3)\ \alpha_{k,3}]C_{1,3}$$ Hydrolysis (2.6.1)

$$- k_{pl}[L]_3\ [\sum_{k=1}^{3} \phi_{p,k}\ \alpha_{k,3}]C_{1,3}$$ Photolysis (2.6.2)

$$- [\sum_{k=1}^{3} k_{ox,k}[RO_2\cdot]_3\ \alpha_{k,3}]C_{1,3}$$ Oxidation (2.6.3)

$$-[\sum_{k=1}^{3} k_{bac,k}[C_{bac}]_3\ \alpha_{k,3}]C_{1,3}$$ Bacterial Degradation (2.6.4)

$-k_v$ (wind, current, depth) $\alpha_{1,3}\ C_{1,3}$ Volatilization (2.6.5)

Chemical in Segment 4 of River

$$V_4 \frac{dC_{1,4}}{dt} = \text{Deposition-Scour-Pore Water Diffusion}$$
$$\text{-Direct Sorptive Exchange with Bed Surface}$$
$$\text{-Percolation (or + Infiltration)}$$
$$\text{-Hydrolysis-Oxidation-Bacterial Degradation}$$

Networks with multiple benthic segments may also transport chemical through the process of sedimentation. For example, Segment 2 of the lake in Figures 2-1 and 2-3 can be represented by the following finite difference equation:

Lake Segment 2

$$V_2 \frac{dC_{1,2}}{dt} = \text{Deposition-Scour}$$
$$\text{-Pore Water Diffusion}$$
$$\text{-Direct Sorptive Exchange with Surface}$$
$$\text{-Percolation (or + Infiltration}$$
$$\text{-Hydrolysis-Oxidation}$$
$$\text{-Bacterial Degradation}$$

$$-\left(\frac{W_d}{L_1} C_{2,1} - \frac{W_s}{L_2} C_{2,2}\right) V_2 \frac{C_{1,2}\ \alpha_{2,2}}{C_{2,2}} \quad \text{Burial (2.5)}$$

$$-\left(\frac{W_d}{L_1} \frac{C_{2,1}}{C_{2,3}} - \frac{W_s}{L_2} \frac{C_{2,2}}{C_{2,3}}\right) V_2 \left(\frac{C_{2,3}}{C_{2,2}} - 1\right) \quad \text{Pore Water Squeezed (2.5)}$$

SECTION 3
WASP MAINLINE AND SUBROUTINE OVERVIEW

WASP is a modular program. Its many subroutines can be grouped into the standard categories of "input," "process," "output," and "utility," as in Figure 3-1.

The WASP mainline is really just a program control module. As such it assigns the logical units (disk) for temporary scratch files and the dump-save files generated in the kinetic subroutine, and controls the calling sequence of the WASP subroutines.

The following subroutine descriptions include references (within parentheses), to Card (or Record) Groups. These groups of WASP input data are described in Section 4, WASP Input Structure. Also, in the following subroutine description, occasional reference to internal WASP program variables will be made. A complete definition of these variables is presented in the Glossary Section entitled "WASP COMMON."

WASP1

WASP1 reads the model identification and system by-pass options for the user's model (Card Group A). WASP1 also performs some variable initialization. Two variables of interest set by WASP1 are NBCPSY and NWKPSY. NBCPSY and NWKPSY are used, respectively, to indicate the maximum number of boundary conditions and forcing functions for which WASP is dimensioned.

WASP2

WASP2, depending upon the input option selected by the user, reads Card Group B, the time variable or constant exchange coefficients (or dispersion coefficients, cross-sectional areas, and characteristic lengths with appropriate conversion to exchange coefficients). WASP2 also reads the exchange by-pass options for each system.

WASP3

WASP3 reads the segment volumes (Card Group C).

WASP4

WASP4, depending upon the input option selected by the user, reads the time variable or constant advective flows (Card Group D). WASP4 converts the flows from cubic feet per second to million cubic feet per day. WASP4 also reads the flow by-pass options for each system.

Figure 3-1

WASP Program Structure

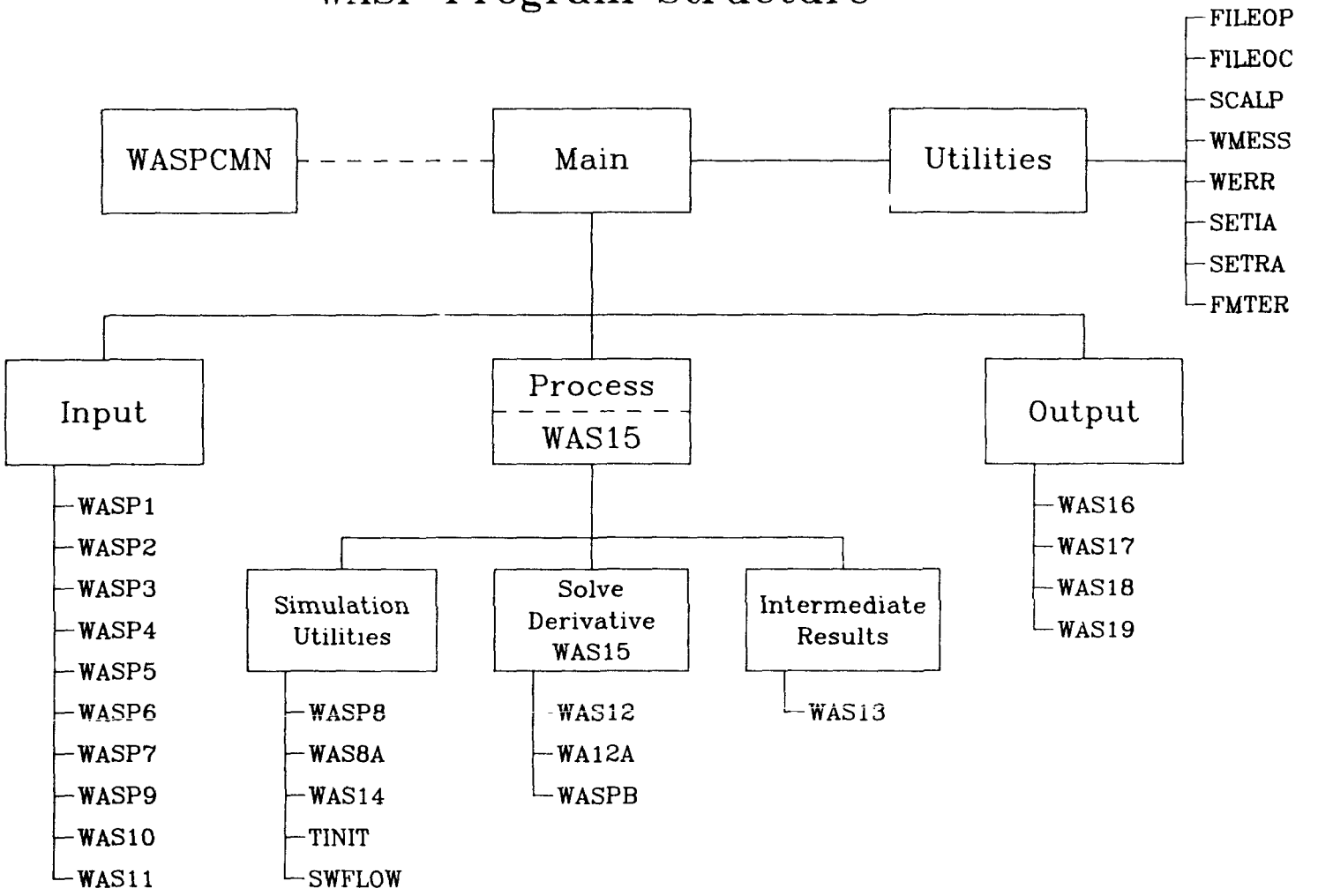

WASP5

WASP5, depending upon the input options selected by the user, reads the time variable or constant boundary conditions for each system in the user's model (Card Group E).

WASP6

WASP6, depending upon the input options selected by the user, reads the time variable or constant forcing functions for each system in the user's model (Card Group F).

WASP7

WASP7 reads the kinetic constants, segment parameters, and kinetic piecewise linear functions of time (Card Group G, H, and I, respectively).

WASP8

WASP8 is used to update the piecewise linear functions of time, if any, for exchange coefficients, advective flows, and the miscellaneous kinetic functions. This means computing new slopes and intercepts, and setting a variable to indicate the next simulation time that the functions are to be updated. The following convention is used for the ith update.

$$\text{slope} = \frac{f(t)_{i+1} - f(t)_i}{t_{i+1} - t_i}$$

$$\text{intercept} = f(t)_{i+1}$$

$$\text{next update time} = t_{i+1}$$

WAS8A

WAS8A is used to update the piecewise linear functions of time, if any, for boundary conditions and forcing functions. This means computing new slopes and intercepts for any system or state variable that requires an update, and setting a variable to indicate the next simulation time that the piecewise linear functions are to be updated. The same conventions used in WASP8 are used in WAS8A for computing slopes and intercepts.

WASP9

WASP9 reads the initial conditions or initial segment concentrations for each system or state variable (Card Group J). WASP9 also reads the stability and accuracy criteria (Card Group K) for each system.

WAS10

WAS10 reads the print control options (Card Group L), consisting of the print interval and up to eight system-segment pairs for intermediate print-out during the simulation.

WAS11

WAS11 reads the integration control information (Card Group M). The integration control information includes the integration step-size or sizes to be used, the total simulation time, the starting time for the simulation (if not zero), and whether negative solutions will be permitted.

WAS12 - WA12A

WAS12 and WA12A act together to complete the evaluation of the mass balance Equation (2.16). Upon entry to WAS12, only the kinetic portion of the mass balance equation has been evaluated, which for discussion purposes will be noted as K V C . WAS12 then goes through the following steps.

a. Using the IQ and JQ vectors as drivers, WAS12 computes

$$(V_i C_i^m) = (V_i C_i^m) + \Sigma Q_{ji} C_j^m - \Sigma Q_{ik} C_i^m$$

or $$(V_i C_i^m) = K_i V_i C_i^m + \Sigma Q_{ji} C_j^m - \Sigma Q_{ik} C_i^m$$

where Q may be computed as a function of time using the MQ (slopes) and BQ (intercepts) vectors or Q may be a constant (using BQ vector).

b. Using the IR and JR vectors as drivers, WAS12 computes

$$(V_i C_i^m) = (V_i C_i^m) + \Sigma R_{ij} (C_j^m - C_i^m)$$

or $$(V_i C_i^m) = K_i V_i C_i^m + \Sigma Q_{ji} C_j^m - \Sigma Q_{ik} C_i^m + \Sigma R_{ij} (C_j^m - C_i^m)$$

where R may be computed as a function of time using the MR (slopes) and BR (intercepts) vectors, or R may be a constant (using the BR vector).

c. Using the IWK vector as a driver, WAS12 computes

$$(V_i C_i^m) = (V_i C_i^m) + W_i^m$$

or $$(V_i C_i^m) = K_i V_i C_i^m + \Sigma Q_{ji} C_i^m - \Sigma Q_{ik} C_i^m + \Sigma R_{ij} (C_j^m - C_i^m) + W_i^m$$

where W may be computed as a function of time using the MWK (slopes) and BWK (intercepts) vectors or W may be a constant (using the BWK vector).

d. WAS12 completes the evaluation of the derivative, C_i^m by dividing through by the volume and multiplying by the time scale factor (SCALT)

$$C_i^m = SCALT \times (V_i C_i^m)/V_i$$

Note: C_i^m now has units $M/L^3/T$ - nominally mg/l/day.

WAS13

WAS13 is used to print the intermediate system-segment pairs during the simulation.

WAS14

WAS14 is used to adjust the integration stepsize as necessary, during the simulation.

TINIT

TINIT is used to set the initial slopes and intercepts for any piecewise linear functions of time if the user starts a simulation at any time other than time equal to zero.

WAS15 or EULER

WAS15 or EULER is the heart of the integration procedure. It determines the calling sequence for TINIT, WASPB (the user's kinetic subroutine), WAS12, WA12A, WAS13, and WAS14. WAS15 performs a second order Runge-Kutta integration, while EULER performs a first-order Euler integration. A brief flowchart is presented in Figure 3-2.

WAS16

WAS16, dependent upon the user's input data, retrieves and prints the state variables (or water quality concentrations) and any other variables of interest (that the user computed in WASPB) from the auxiliary storage (disk files) that were generated in WASPB during the simulation.

SWFLOW

SWFLOW reads hydraulic information created by SWMM (RECEIV block, program SWFLOW). This subroutine is invoked when IQOPT in Card Group D is set to 4. IVOPT in Card Group C must also be 4. The file is named "SWFLOW.DAT," and is locted on unit 92.

Figure 3-2
Simplified EULER/WAS15 Flow Chart

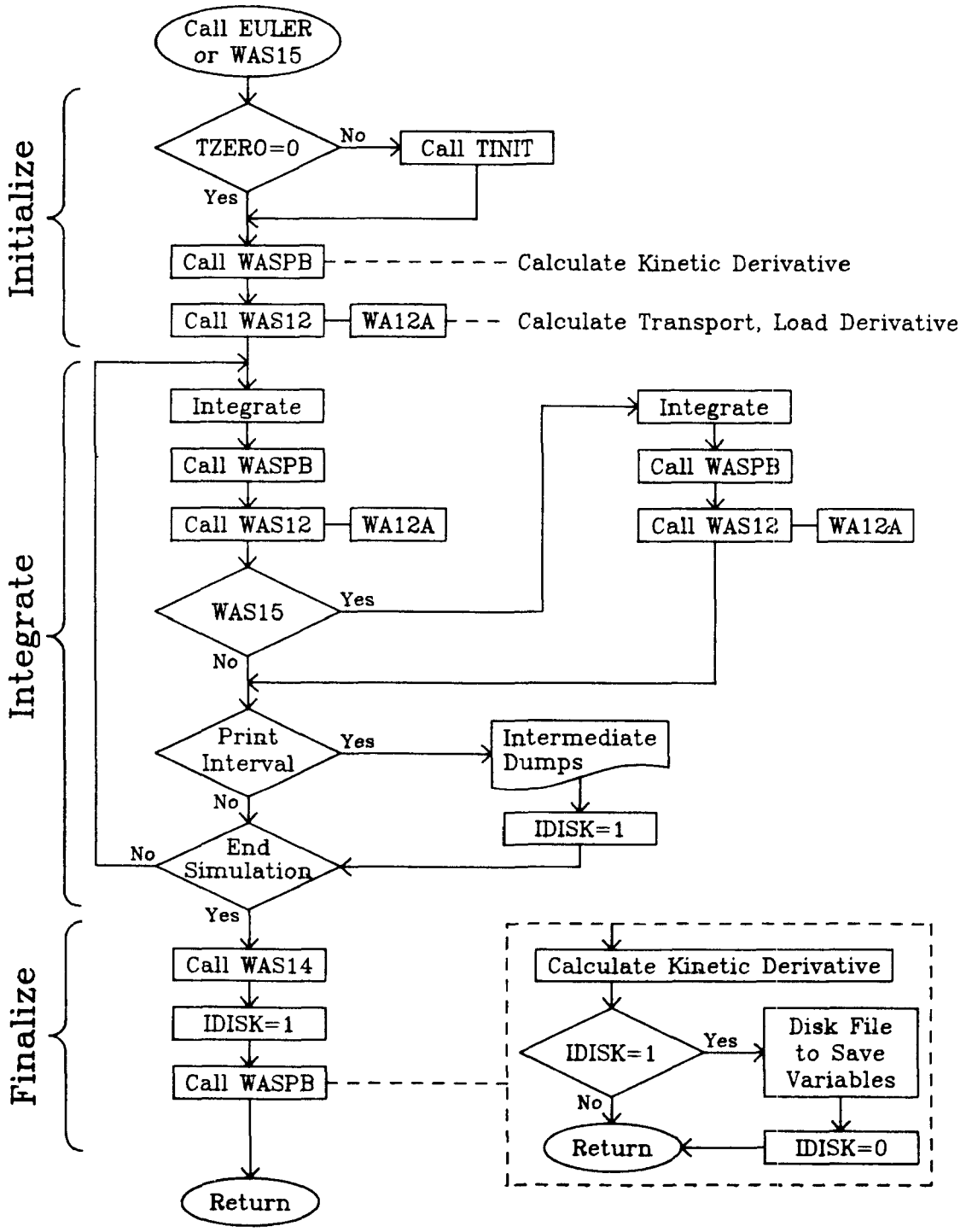

WAS17

WAS17, dependent upon the user's input data, retrieves and provides printer plots for the state variables (or water quality concentrations) and any other variables of interest (that the user computed in WASPB) from the auxiliary storage (disk files) that were generated in WASPB during the simulation.

WAS18

WAS18, written especially for the DEC PDP 11/45, provides off-line digital pen plotting capabilities. The pen plots generated are similar to the printer plots available through WAS17, but in addition permit the user to overplot his observed field data for model-data comparison.

WAS19

WAS19, dependent upon the user's input data, retrieves and provides printer plots of the spatial variation at selected times for the state variables (or water quality concentrations) and any other variables of interest (that the user computed in WASPB) from the auxiliary storage (disk files) that was generated in WASPB during the simulation.

Auxiliary plot subroutines called by WAS19 include STR, PLOT, BLKPLN, and ENCOD (for IBM version only).

Miscellaneous Subroutines

WASP also includes a number of subroutines that perform rather trivial, but necessary, operations. These subroutines include SCALP, WMESS, WERR, SETIA, SETRA and FMTER.

DEC PDP Subroutines

Two special subroutines were written for the DEC computer system. These subroutines FILEOP and FILEOC were necessitated due to the way the DEC operating system handles disk output, i.e., requiring separate core buffers for each disk file. FILEOP and FILEOC permit the disk files to share a common disk buffer, reducing the excessive core requirements required for separate buffers, at little cost to execution time.

TOXIWASP Kinetic Structure

The standard WASP kinetic subroutine shown in Figure 3-1 is actually a set of subroutines in TOXIWASP. The structure of these subroutines is illustrated in Figure 3-3. These WASPB subroutines combine chemical and environmental parameters to first-order rates and, from chemical concentrations passed by WASP, calculate kinetic derivatives. These derivatives are passed back to WASP where they are integrated along with the transport and loading derivatives every time step.

Figure 3-3
TOXIWASPB Kinetic Subroutine Structure

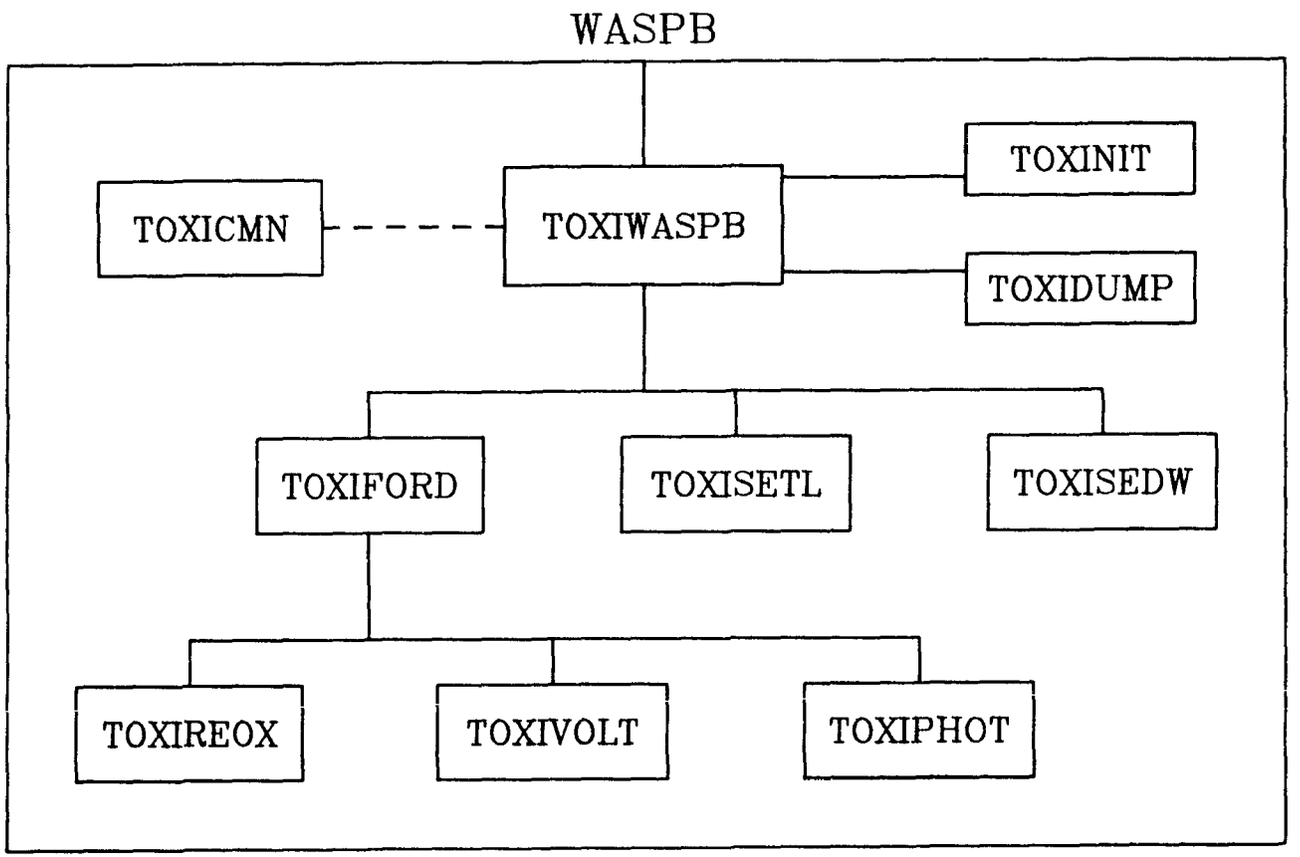

TOXIWASPB

TOXIWASPB serves as the main program for the kinetic portion of TOXIWASP, calling other subroutines when appropriate. Initialization is performed during the first time step by calling TOXINIT. As the simulation progresses, the proper time- and space-variable environmental and chemical characteristics are calculated, then passed to TOXIFORD. Kinetic derivatives are calculated based on first-order rate constants returned from TOXIFORD. These derivatives are then adjusted for settling, erosion, and percolation by calling TOXISETL. Further adjustments in the derivatives due to pore water mixing and sediment-water exchange are calculated by calling TOXISEDW. Variables are periodically dumped to a save file and intermediate parameters and results are printed by calling TOXIDUMP. Finally, daily flows and non-point source loads are read from an auxilliary file.

TOXINIT

TOXINIT is called during the first time step only to initialize parameters and functions for the chemical simulation. A sequential file is set up for reading daily flows and nonpoint source loads, and two tables are printed. The top sediment layer for the special print segment is identified. Effective partition coefficients for each segment are calculated from either the organic carbon or octonol-water partition coefficient, the spatially variable sediment organic carbon fractions, and the target organism organic carbon content. For benthic segments, the units of biomass are adjusted and porosity is calculated. The active bacterial population is calculated for all segments. Initial and reference bed volumes are saved, values are initialized to 0, and CMAX(1) is set to assure the first-order decay assumption. Finally, TOXINIT checks for proper segment alignment, with assigned numbers increasing sequentially from water surface to bottom benthic segments.

TOXIFORD

TOXIFORD, a modification of the EXAMS subroutine FIRORD, calculates total first order chemical transformation rates for each segment as the simulation progresses. The total first-order rate for each segment is the summation of the transformation (including degradation or transfer) rates due to five processes: hydrolysis, oxidation, bacterial degradation, volatilization, and photolysis. These individual rates are calculated from ambient environmental and chemical characteristics passed from TOXIWASPB.

Whenever total rates are to be recalculated during a simulation, TOXIWASPB calls TOXIFORD once for each segment. TOXIFORD first calculates the volatilization transfer rate of dissolved chemical from surface water segments by calling TOXIVOLT. Next, the photolysis rate constant is calculated for water segments by calling TOXIPHOT. Then, for each species of the chemical (dissolved, sediment-sorbed, and biosorbed), first-order transformation rates are calculated for photolysis, hydrolysis, oxidation, and bacterial degradation. Finally these individual rates are summed to give a total first-order chemical disappearance rate, which is passed back to TOXIWASPB.

TOXIVOLT

When called by TOXIFORD, TOXIVOLT computes the volatilization transfer rate constant for a surface water segment using a two-film model of movement of toxicant across the air-water interface. Liquid phase resistance is computed from oxygen reaeration rates modified by the chemical molecular weight. Gas phase resistance is computed from wind speed and Henry's Law constant, which is supplied by the user or calculated from vapor pressure and solubility data. The volatilization rate is computed from the air and water phase resistances and the depth of the surface water segment.

TOXIPHOT

When called by TOXIFORD, TOXIPHOT computes the photolysis transformation rate constant for a water segment. TOXIPHOT accepts a measured (clear day) photolysis rate constant at a specified reference latitude as input data. Next, this rate constant is corrected for the latitude, cloud cover, and light extinction in the water column. The rate is further modified by a time-varying input function to approximate seasonal changes in incident light intensity.

TOXIREOX

TOXIREOX is call by TOXIFORD for surface water segments to calculate reaeration velocities. These are used in TOXIVOLT for calculating volatilization rates. For the first time step only, TOXIREOX calculates average flow-induced reaeration rates by the Covar method (Covar, 1976) using average segment velocities and depths. In subsequent time steps, TOXIREOX calculates time-varying wind-induced reaeration rates. The reaeration rate returned to TOXIFORD is either the flow-induced rate or the wind-induced rate, whichever is larger. TOXIREOX is slightly modified from the HSPF subroutine OXREA.

TOXISETL

TOXISETL is called by TOXIWASPB for each segment and each time step to calculate settling of chemical and suspended sediment from the water column, erosion of chemical in the bed, and percolation of dissolved chemical vertically through the bed. Concentration derivatives are adjusted within TOXISETL. First, settling rates are calculated from spatially variable settling velocities, segment depths, concentrations of sorbed chemical and suspended sediment. Erosion is calculated from spatially variable yearly depletion rates from the bed sediment surface, along with sediment density and sorbed chemical concentration. Bed sediment segments are assumed to maintain their physical characteristics, such as density, porosity, and organic content. Vertical pore water percolation is calculated from spatially variable vertical flow rates, along with porosity and dissolved concentrations. Positive flow is upward, and negative flow is downward. It should be noted that downward percolation will eventually transport the chemical out of the bottom benthic segment.

TOXISEDW

TOXISEDW is called by TOXIWASPB for surface benthic segments each time step to calculate dispersive exchanges of chemical between the bed and the water column. Concentration derivatives are adjusted within TOXISEDW. The two mechanisms are pore water diffusion and local surface sediment equilibration with the water column. Pore water diffusion is calculated from spatially variable diffusion coefficients, surface areas, characteristic mixing lengths, and sediment porosity. Sorption-desorption of chemical between overlying water and the benthic surface is calculated using sediment turnover rates and chemical partition coefficients. Because local equilibrium is assumed, sorption-desorption is controlled by the fraction of underlying sediment brought into contact with the overlying water per unit time. This fraction is related to the pore water diffusion rate by a spatially variable multiplier supplied by the user. For immobile, armored stream reaches, the multiplier may be 0, whereas for reaches vigorously mixed by physical or biological processes, the multiplier may be 1, with high pore water dispersion coefficients as well.

TOXIDUMP

At specified intervals, TOXIWASPB calls TOXIDUMP to prepare or print output from the simulation. Three kinds of output are handled. The first is the standard WASP dump of select variables to a save file at fixed intervals. Eight variables are dumped for "System 1": total chemical concentration (mgc/l_T), dissolved chemical concentration (mgc/l_W), sediment-sorbed chemical concentration (mgc/kgs), biosorbed chemical concentration (ugc/gb), chemical fraction dissolved, chemical fraction sediment-sorbed, chemical mass in segment (kg), and chemical mass lost through volatilization or burial (kg). Eight more variables are dumped for "System 2": total sediment concentration (mgs/l_T), segment depth (ft), the total transformation rate (per day), the photolysis rate, the hydrolysis rate, the biodegradation rate, the oxidation rate, and the volatilization rate (all specific rates in units of per hour).

The second kind of output is event-triggered. When the total chemical concentration exceeds a reference value at a selected segment, total chemical concentrations are printed for every segment every 3 hours until the concentration again falls below the reference.

The third kind of output is the dump of chemical and sediment concentrations at a selected water segment (and its top benthic segment) to a save file every 3 hours. This file is processed by TOXIFREQ after the simulation to yield statistical information, including a cumulative frequency table. Concentrations analyzed include total chemical, dissolved chemical, sediment-sorbed chemical, and biosorbed chemical.

TOXIFREQ

After completion of the simulation, TOXIFREQ processes a file of chemical concentrations at a water and a benthic segment, producing statistical tables. A save file of concentrations written every 3 hours by TOXIDUMP is

first ordered by TOXIORDR. Next, the statistics are computed, including minimum, maximum, and mean; various percentiles; standard deviation; skewness; and kurtosis. This table is printed, then a cumulative frequency table is prepared, with concentrations corresponding to ascending even probability values (0.0, 0.02, 0.04,..., 0.98, 1.00). This table is printed, and a plot file is prepared.

SECTION 4
PREPARATION OF DATA INPUT

This section describes the input required to run TOXIWASP. This section is reproduced, mostly intact, from the WASP user's manual. Although the general input structure allows many systems (or state variables), TOXIWASP allows only two: organic chemical and sediment. Furthermore, whereas WASP allows arbitrary segment numbering schemes, TOXIWASP requires that vertically layered sections be numbered sequentially from surface water to bottom benthic.

To arrange the input data into a logical format, the data cards required are divided into 14 card groups, A through N. The card groups are briefly summarized in Table 4-1. For each card group, a brief description of each card is given to define the variables that appear within the group, and any options that may be available. Depending upon the structure of the user's model, a certain card group, or cards within a group, may not need to be inputted. Where it is appropriate, the manual informs the user how to avoid inputting unnecessary information.

To help the user visualize how the data input file is organized, a sample dataset is provided as Appendix 4. This dataset describes the constant addition of the chemical dibenzothiophene into the pond illustrated in Figure 2-1 (page 6).

Provisions for handling a wide range of time and space scales are contained in the data input structure via scale factors. These scale factors facilitate the conversion of the user's time and space units to those consistent with the WASP program. The standard units for the WASP input data are detailed in this manual. Departure from these units necessitates the use of appropriate scale factors. Scale factors may also be used to scale input data in sensitivity analysis. For example, a user may wish to test the effect of increased dispersion upon the model. Rather than altering all the interfacial dispersion coefficients he may simply change the dispersion coefficient scale factor to reflect the appropriate increase in dispersion levels.

4.1 CARD GROUP A - MODEL IDENTIFICATION AND SYSTEM BYPASS OPTIONS

The variables that appear on each card are as follows.

4.1.1 Model Identification Numbers

TABLE 4-1. SUMMARY OF CARD GROUPS

Card Group	
A.	Model Identification and System Bypass Options
	1. Model Identification Numbers
	2. Title Card
	3. Simulation Option
	4. System Bypass Option
B.	Exchange Coefficients
	1. Number of Exchange Coefficients, Input Option Number
	2. Scale Factor
	3. Exchange Coefficients
	4. Exchange Bypass Options
C.	Segment Volumes
	1. Number of Volumes, Input Option Number
	2. Scale Factor
	3. Volumes
D.	Flow
	1. Number of Flows, Input Option Number
	2. Scale Factor
	3. Flows
	4. Flow Bypass Option
E.	Boundary Conditions
	1. Number of Boundary Conditions, Input Option Number
	2. Scale Factor
	3. Boundary Conditions
	Cards 1-3 are inputted for each system of the model
F.	Forcing Functions
	1. Number of Forcing Functions, Input Option Number
	2. Scale Factor
	3. Forcing Functions
	Cards 1-3 are inputted for each system of the model
G.	Parameters (Environmental Characteristics)
	1. Number of Parameters
	2. Scale Factors
	3. Parameters
H.	Constants (Chemical Characteristics and Special Options)
	1. Number of Constants
	2. Constants

TABLE 4-1. (CONT.)

Card Group	
I.	Miscellaneous Time Functions (Environmental Variability) 1. Number of Time Functions 2. Functions Name, Number of Breaks in Function 3. Time Function Cards 2 and 3 are inputted for each time function required by the model
J.	Initial Conditions 1. Initial Conditions for each system of the model, i.e., chemical and sediment
K.	Stability and Accuracy Criteria 1. Stability Criteria 2. Accuracy Criteria
L.	Intermediate Print Control 1. Print Interval 2. Display Compartments
M.	Integration Control Information 1. Integration Option 2. Time Warp Scale Factor 3. Integration Interval and Total Time
N.	Display Parameters 1. Variable Names 2. Dump Parameters 3. Printer Plot Parameters (Time History) Cards 1 and 2 are read for each system; etc. 4. Printer Plot Parameters (Spatial Profile) 5. Pen Plot Parameters

Card Group A
Model Identification and System Bypass Options

5	10	15	20	25	30	35
MODEL	ISER	IRUN	NOSEG	NOSYS	LISTG	LISTC

FORMAT (7I5)

MODEL = model designation.

ISER = series designation.

IRUN = run number.

NOSEG = number of model segments.

NOSYS = number of systems, here always = 2.

LISTG = 0, print input data for exchange coefficients, volumes, flows, and boundary conditions on the principal output device.

= 1, suppress printing of input data for exchange coefficients, volumes, flows, and boundary conditions.

LISTC = 0, print input data for forcing functions, segment parameters, constants, miscellaneous time functions, and initial conditions on the principal output device.

= 1, suppress printing of input for forcing functions, segment parameters, constants, miscellaneous time functions, and initial conditions.

MODEL, ISER, IRUN, although not actually used by the WASP program, can assist the user in maintaining a log of computer simulations.

4.1.2 Title

1	80
VERIFICATION OF AUGUST 1973 RIVER SURVEY, REACH 1	

FORMAT (20A4)

Card column 1-80 contain any information the user feels would be helpful in describing the run and identifying the output for later reference.

4.1.3 Simulation Option

Presently WASP permits only time variable simulations, therefore include the following card.

1	24
TIME VARIABLE SIMULATION	

FORMAT (6A4)

4.1.4 Systems Bypass Options

2	4	
SYSBY(1)	SYSBY(2)	... SYSBY(NOSYS)
FORMAT (19I2)		

SYSBY(K) = 0, perform the kinetic and transport phenomena associated with system K (numerically integrate the differential equations).

= 1, bypass all kinetic and transport phenomena associated with system K (concentrations read as initial conditions for system K apply throughout simulation period).

4.2 CARD GROUP B - EXCHANGE COEFFICIENTS

Exchange coefficients in TOXIWASP may be inputted in only one of WASP's six formats--coefficients calculated from inputted dispersion coefficients and accompanying cross-sectional areas and characteristic lengths.

4.2.1 Data Input Option Number; Number of Exchange Coefficients

5	10
IROPT	NOR
FORMAT(2I5)	

Data input options:

IROPT = 4, constant exchange coefficients calculated from the dispersion, coefficient, cross-sectional area, and characteristic lengths specified for each interface.

NOR = number of exchange coefficients.

If no exchange coefficients are to be read, set NOR equal to zero, and continue with Card Group C.

4.2.2 Scale Factor for Exchange Coefficients

10
SCALR
FORMAT (E10.3)

SCALR = scale factor for exchange coefficients. This can be used for units conversion or for sensitivity analysis.

4.2.3 Exchange Coefficients

The data input format is determined by the option selected.

Option 4

Each card in this package contains the information to calculate the exchange coefficients for two interfaces. The number of dispersion coefficients is equal to NOR. The information on each card is described below:

10	20	25	30	35	40
E(K)	A(K)	IL(K)	JL(K)	IR(K)	JR(K)

50	60	65	70	75	80
E(K+1)	A(K+1)	IL(K+1)	JL(K+1)	IR(K+1)	JR(K+1)

FORMAT (2(2F10.0, 2F5.0, 2I5))

E(K) = dispersion coefficient for the interface between segment IR(K) and JR(K) in square miles/day. If exchange is between bed and water column, the units are square centimeters/sec.

A(K) = the interfacial cross-sectional area between segments IR(K) and JR(K), in square feet.

IL(K) = the length of segment IR(K), with respect to the IL(K)-JL(K) interface, in feet.

JL(K) = the length of segment JR(K) in relation to the IR(K)-JR(K) interface, in feet. If a segment exchanges with a boundary, the characteristic length of the boundary should be set equal to the length of the segment with which it is exchanging.

IR(K),JR(K) = segments between which exchange takes place. NOTE: for exchange only, order is not important -- if a segment exchanges with a boundary, the boundary is specified as zero.

4.2.4 Exchange Bypass Options

2	4	
RBY(1)	RBY(2)	....RBY(NOSYS)

FORMAT (19I2)

RBY(K) = 0, exchange phenomena occurs in system K.

= 1, bypass exchange phenomena for system K (effectively set for all exchange coefficients equal to zero for system K).

4.3 CARD GROUP C - VOLUMES

4.3.1 Data Input Option Number; Number of Volumes

5	10
IVOPT	NOV

FORMAT (2I5)

Data input options:

IVOPT = 1, constant volumes.
= 4, volumes from RECEIV hydrodynamic model read in each time step through unit 92 (SWFLOW.DAT). IQOPT in Card Group D must also be 4.

NOV = number of volumes; normally NOV is equal to NOSEG, the number of segments, but for some special input structures, NOV need not equal NOSEG.

4.3.2 Scale Factor for Volumes

10
SCALV

FORMAT (E10.3)

SCALV = scale factor for volumes; volumes are normally expressed in units of million cubic feet. If other units are necessitated by alteration in the space scale, SCALV should contain the appropriate conversion factor; if normal units are employed, SCALV = 1.0.

4.3.3 Volumes

The data input format is determined by the option selected. If IVOPT = 4, these volumes are not entered.

Option 1

Each card in this package contains the volume information for eight segments. The number of volumes is equal to NOV. The information on each card is described below.

10	20	30	....	70	80
VOL(K)	VOL(K+1)	VOL(K+2)	....	VOL(K+6)	VOL(K+7)

FORMAT (8F10.0)

VOL(K) = volumes of segment K, in million cubic feet. The volumes are to be input consecutively, starting with segment 1, and ending with segment NOV.

4.4 CARD GROUP D - FLOWS

4.4.1 Data Input Option Number; Number of Flows

5	10
IQOPT	NOQ

FORMAT (2I5)

Data Input Options:

IQOPT = 1, constant flows.

= 2, all flows proportional to one piecewise linear approximation.

= 3, each flow is represented by its own piecewise linear approximation.

= 4, flows from RECEIV hydrodynamic model read in each time step through unit 92 (SWFLOW.DAT).

NOQ = number of flows.

If no flows are to be inputted, set NOQ to zero, and go to Card Group E.

4.4.2 Scale Factor for Flows

10
SCALQ

FORMAT (E10.3)

SCALQ = scale factor for flows, flows are normally read in cubic feet per second.

4.4.3 Flows

The data input format is determined by the option selected. If IQOPT = 4, no flows are read (skip to 4.4.4).

Option 1--

Each card in this package contains the flow information for four interfaces, the number of flow specifications is equal to NOQ. The information on each card is described below.

10	15	20	30	35	40
BQ(K)	JQ(K)	IQ(K)	BQ(K+1)	JQ(K+1)	IQ(K+1)

50	55	60	70	75	80
BQ(K+2)	JQ(K+2)	IQ(K+2)	BQ(K+3)	JQ(K+3)	IQ(K+3)

FORMAT (4(F10.0, 2I5)

BQ(K) = flow between segment JQ(K) and IQ(K) in cfs. AESOP convention is: if the flow value is positive, then flow is from segment JQ(K) to IQ(K).

JQ(K) = upstream segment.

IQ(K) = downstream segment.

If flow is from a segment to a boundary, then IQ(K) is set equal to zero; if a flow is from a boundary to a segment, then JQ(K) is set equal to zero.

Option 2--

The card package consists of two sub-packages. Sub-package I contains the flow routing while sub-package II contains a detailed specification of the piecewise linear approximation to which all the flows are proportional.

Sub-Package Flows

Sub-Package I-Flows--Each card in this sub-package contains the flow information for four interfaces. The number of flow specifications is equal to NOQ. The information on each card is described below:

10	15	20	30	35	40
BQ(K)	JQ(K)	IQ(K)	BQ(K+1)	JQ(K+1)	IQ(K+1)

50	55	60	70	75	80
BQ(K+2)	JQ(K+2)	IQ(K+2)	BQ(K+3)	JQ(K+3)	IQ(K+3)

FORMAT (4(F10.0, 2I5))

BQ(K) = ratio of the flow between segments JQ(K) and IQ(K) to the piecewise linear flow approximation.

JQ(K) = upstream segment.

IQ(K) = downstream segment.

If flow is from a segment to a boundary, then JQ(K) is set equal to zero; if a flow is from a boundary to a segment, then IQ(K) is set equal to zero.

Sub-Package II - Piecewise Linear Flow--The number of breaks required to describe the piecewise linear approximation is followed by a time series describing the piecewise linear flow approximation. Each time series element consists of two parts; a flow and a time. The input is as follows.

10
NOBRK

FORMAT (I5)

NOBRK = number of values and times used to describe the piecewise linear approximation.

10	20	30	40	50	60	70	80
QT(K)	T(K)	QT(K+1)	T(K+1)	QT(K+2)	T(K+2)	QT(K+3)	T(K+3)

FORMAT (8F10.0)

QT(K) = value of the piecewise linear approximation at time T(K), in cubic feet per second.

T(K) = time in days, if the length of the simulation exceeds T(NOBRK), the broken line function will repeat itself, starting at time T(1), i.e., the approximation is assumed to be periodic, with period equal to T(NOBRK).

Option 3--

Each flow is defined by a package of cards consisting of two sub-packages. The first sub-package identifies the two segments between which the flow occurs, and the number of values comprising the piecewise linear flow approximation. The second sub-package defines the piecewise linear approximation which describes the flow. The input is as follows.

Sub-Package I--

5	10	15
JQ(K)	IQ(K)	NOBRK

FORMAT (3I5)

JQ(K) = upstream segment, flow from segment JQ(K) to IQ(K), assuming positive flow.

IQ(K) = downstream segment flow from segment IQ(K), assuming positive flow.

NOBRK = number of values and times used to describe the broken line approximation. All flows must have the same number of breaks, and all breaks must occur at the same time relative to one another.

Sub-Package II--

Sub-package II is a time series describing the piecewise linear approximation. Each time series element consists of two parts: a flow and a time. The input is as follows.

10	20	30	40	50	60	70	80
QT(K)	T(K)	QT(K+1)	T(K+1)	QT(K+2)	T(K+2)	QT(K+3)	T(K+3)

FORMAT (8F10.0)

QT(K) = value of the piecewise linear flow approximation at time T(K) in cubic feet per second.

T(K) = time in days, if the length of the simulation exceeds T(NOBRK) the broken line function will repeat itself, starting at time, T(1). All break times must agree for all flows, T(2) must be the same for all flows, etc.

4.4.4 Flow Bypass Options

The flow bypass options permit the flow transport to be set equal to zero in one or more systems, while maintaining the flow regime (as defined by one of the above options) in the remaining systems.

	2		4		
QBY(1)		QBY(2)	....	QBY(ISYS)	
FORMAT (19I2)					

QBY(K) = 0, flow transport occurs in system K.

= 1, bypass the flow transport for system K (effectively set all flows equal to zero in system K).

4.5 CARD GROUP E - BOUNDARY CONDITION

All input is read NOSYS times; once for each system of the model.

4.5.1 Data Input Option Number; Number of Boundary Conditions

	5	10
IBCOP(K)		NOBC(K)
FORMAT (2I5)		

Data Input Options:

IBCOP(K) = 1, constant boundary conditions.

= 2, all boundary conditions proportioned to one piecewise linear approximation.

= 3, each boundary condition represented by its own piecewise linear approximation.

NOBC(K) = number of boundary conditions used for system (K).

If no boundary conditions are to be inputted, set NOBC(K) equal to zero, and continue with the next system, or go to the next card group.

4.5.2 Scale Factor for Boundary Conditions

10
SCALB
FORMAT (E10.3)

SCALB = scale factor for boundary conditions. Boundary conditions are normally expressed as milligrams per liter (mg/l), or parts per million parts (ppm).

4.5.3 Boundary Conditions

The data input format is determined by the option selected.

Option 1--

10	15	25	30	40
BBC(K)	IBC(K)	BBC(K+1)	IBC(K+1)	BBC(K+2)

45	55	60	70	75
IBC(K+2)	BBC(K+3)	IBC(K+3)	BBC(K+4)	IBC(K+4)

FORMAT (5(F10.0, I5))

BBC(K) = boundary condition of segment IBC(K) in mg/l.

IBC(K) = segment number to which boundary condition BBC(K) is to be applied.

Option 2--

The card package consists of two sub-packages. Sub-package I contains the boundary condition data, while sub-package II contains a detailed specification of the piecewise linear approximation to which all the boundary conditions are to be proportional.

Sub-Package I--Each card in this sub-package contains the boundary condition information for five segments. The number of boundary condition specifications is equal to NOBC. The information on each card is described below.

10	15	25	30	40
BBC(K)	IBC(K)	BBC(K+1)	IBC(K+1)	BBC(K+2)

45	55	60	70	75
IBC(K+2)	BBC(K+3)	IBC(K+3)	BBC(K+4)	IBC(K+4)

FORMAT (5(F10.0, I5))

BBC(K) = ratio of the boundary condition for segment IBC(K) to the piecewise linear approximation.

IBC(K) = segment number.

Sub-Package II--The number of breaks required to describe the piecewise linear boundary condition approximation is followed by a time series describing the boundary approximation. Each time series element consists of two parts; boundary concentration, and a time. The input is as follows.

5
NOBRK
FORMAT (I5)

NOBRK = number of values and times used to describe the piecewise linear approximation.

10	20	30	40	50	60	70	80
BCT(K)	T(K)	BCT(K+1)	T(K+1)	BCT(K+2)	T(K+2)	BCT(K+3)	T(K+3)
FORMAT (8F10.0)							

BCT(K) = value of the broken line approximation at time T(K) in mg/l.

T(K) = time at breaks in broken line approximation, in days.

If the length of the simulation exceeds T(NOBRK), the piecewise linear approximation is repeated, starting at T(1), i.e., the approximation is assumed to be periodic, with period equal to T(NOBRK).

Option 3--

Each boundary condition is defined by a package of cards consisting of two sub-packages. The first sub-package identifies the segment associated with the boundary condition and the number of values comprising the piecewise linear approximation. The second sub-package defines the piecewise linear approximation which describes the boundary conditions. All boundary conditions within a system must have the same number of breaks. The input is as follows.

Sub-Package I--

5	10
IBC(K)	NOBRK(K)
FORMAT (2I5)	

IBC(K) = boundary segment number.

NOBRK(K) = number of values and times used to describe the broken line approximation. The number of breaks must be equal for all boundary conditions within a system.

Sub-Package II--The segment number and the number of breaks required to describe the broken line approximation is followed by a time series describing the broken line approximation. Each time series element consists of two parts: a boundary concentration, and a time (consistent with the normal time scale of the model). The number of breaks must be the same for all boundary approximations. The input is as follows.

10	20	30	40	50	60	70	80
BCT(K)	T(K)	BCT(K+1)	T(K+1)	BCT(K+2)	T(K+2)	BCT(K+3)	T(K+3)

FORMAT (8F10.0)

BCT(K) = value of the boundary approximation at time T(K) in milligrams per liter.

T(K) = time in days if the length of the simulation exceeds T(NOBRK), the broken line approximation is repeated, starting at T(1), i.e., the approximation is assumed to be periodic, with period equal to T(NOBRK). All break times must agree for all segments, i.e., T(1) must be the same for all boundary conditions, T(2) must be the same for all boundary conditions, etc.

4.6 CARD GROUP F - FORCING FUNCTIONS

All input is read NOSYS times, once for each system of the model.

4.6.1 Data Input Option Number; Number of Forcing Functions

5	10
IWKOP(ISYS)	NOWK(ISYS)

FORMAT (2I5)

Data Input Options:

IWKOP(ISYS) = 1, constant forcing functions.

= 2, all forcing functions are proportioned to one piecewise linear approximation.

= 3, each forcing function represented by its own piecewise linear approximation.

NOWK(ISYS) = number of forcing functions used for system ISYS. NOTE: forcing functions may also be considered as sources (loads) or sinks of a water quality constituent. If no forcing functions are to be inputted, set NOWK(ISYS) to zero, and continue with next system or go to next card group.

4.6.2 Scale Factor for Forcing Functions

10
SCALW

FORMAT (E10.3)

SCALW = scale factor for forcing functions. Forcing functions are normally read as pounds per day.

4.6.3 Forcing Functions

The data input format is determined by the option selected.

Option 1

10	15	25	30	40
BWK(K)	IWK(K)	BWK(K+1)	IWK(K+1)	BWK(K+2)

45	55	60	70	75
IWK(K+2)	BWK(K+3)	IWK(K+3)	BWK(K+4)	IWK(K+4)

FORMAT (5(F10.0, I5))

BWK(K) = forcing function of segment IWK(K), in pounds per day.

IWK(K) = segment number to which forcing function BWK(K) is to be applied.

Option 2

The card package consists of two sub-packages. Sub-package I contains the forcing function data, while sub-package II contains a detailed specification of the piecewise linear approximation to which all the forcing functions are proportional.

Sub-Package I--Each card in this sub-package contains the forcing function information for five segments. The number of specifications is equal to NOWK. The information on each card is described below:

10	15	25	30	40
BWK(K)	IWK(K)	BWK(K+1)	IWK(K+1)	BWK(K+2)

45	55	60	70	75
IWK(K+2)	BWK(K+3)	IWK(K+3)	BWK(K+4)	IWK(K+4)

FORMAT (5(F10.0, I5))

BWK(K) = ratio of the forcing function for segment IWK(K) to the piecewise linear approximation.

IWK(K) = segment number to which forcing function BWK(K) is to be applied.

Sub-Package II--The number of breaks required to describe the piecewise linear forcing function approximation is followed by a time series describing the forcing function. Each time series element consists of two parts; a function value and a time. The input is as follows.

5
NOBRK

FORMAT (I5)

NOBRK = number of values and times used to describe the piecewise linear approximation.

10	20	30	40	50	60	70	80
WKT(K)	T(K)	WKT(K+1)	T(K+1)	WKT(K+2)	T(K+2)	WKT(K+3)	T(K+3)

FORMAT (8F10.0)

WKT(K) = value of the forcing function at time T(K), in pounds per day.

T(K) = time in days, if the length of the simulation exceeds T(NOBRK), the forcing function approximation is repeated, starting at T(1), i.e., the approximation is assumed to be periodic, with period equal to T(NOBRK).

Option 3

Each forcing function is defined by a package of cards consisting of two sub-packages. The first sub-package identifies the segment associated with the forcing function and the number of values comprising the piecewise linear approximation. The second sub-package defines approximation which describes the forcing function. The input is as follows.

Sub-Package I--

5	10
IWK(K)	NOBRK(K)

FORMAT (2I5)

IWK(K) = segment number which has forcing function BWK(K).

NOBRK(K) = number of breaks used to describe the forcing function approximation. The number of breaks must be equal for all forcing functions within a system.

Sub-Package II--The segment number and the number of breaks required to describe the piecewise linear forcing function approximation is followed by a time series, describing the forcing function. Each time series element consists of two parts: a function value and a time. The input is as follows:

10	20	30	40	50	60	70	80
WKT(K)	T(K)	WKT(K+1)	T(K)	WKT(K+2)	T(K+2)	WKT(K+3)	T(K+3)

FORMAT (8F10.0)

WKT(K) = value of the forcing function at time T(K), in pounds per day.

T(K) = time in days, if the length of the simulation exceeds T(NOBRK), the approximation is repeated, starting at T(1), i.e., the approximation is assumed to be periodic with period equal to T(NOBRK). All break times must agree for all segments; i.e, T(1) must be the same for all forcing functions, T(2) must be the same for all forcing functions, etc.

4.7 CARD GROUP G - PARAMETERS

The definition of the parameters will vary, depending upon the structure and kinetics of the systems comprising each model. The input format however is constant and is detailed below.

4.7.1 Number of Parameters

5
NOPAM
FORMAT (I5)

NOPAM = number of parameters required by TOXIWASP = 18.

4.7.2 Scale Factors for Parameters

10	20	30		
SCALP(1)	SCALP(2)	SCALP(3)	...	SCALP(NOPAM)
FORMAT (8E10.3)				

SCALP(K) = scale factor for parameter group K.

4.7.3 Segment Parameters

Segment parameters (Numbers on top line are column numbers for input. *.* denotes values for parameters on left.)

5	15 20	30 35	45 50	60 65 75
TEMPM	*.*DEPTH	*.*VELOC	*.*WINDS	*.*TYPEE *.*
BACTO	*.*ACBAC	*.*BIOMS	*.*BIOTM	*.* POHG *.*
OXRAD	*.*OCS	*.*PCTWA	*.*DSPSD	*.* PHG *.*
WS	*.*CMPET	*.*TOTKG	*.*	
TEMPM	*.*DEPTH	..... (Continued for each segment)		

FORMAT (5(A5,F10.0))

Note that only 18 parameters are input here. DISPV is calculated internally and occupies two spaces for each segment. Although contained in the glossary section, a brief description of parameters and units follows.

Parameter	Fortran Variable	Description	Units
1	TEMPM(J)	Average temperature for segment.	degrees C
2	DEPTHG(J)	Depth of segment.	feet
3	VELOC(J)	Average velocity of water in segment.	feet per second
4	WINDG(J)	Average wind velocity 10 cm above the water surface (surface water segments only).	meters per second
5	TYPEE(J)	Flag designating segment type: 1 = surface water, 2 = subsurface water, 3 = surface bed, 4 = subsurface bed.	
6	BACTOG(J)	Bacterial population density in segment.	cells per milliliter (water) cells per 100 grams dry weight (bed)
7	ACBACG(J)	Proportion of bacterial population that actively degrades chemical.	dimensionless ratio
8	BIOMAS(J)	Total actively sorbing biomass in segment.	mg (dry weight) per liter (water) grams (dry weight) per square meter (bed)
9	BIOTMG(J)	Biotemperature in segment.	degrees C
10	POHG(J)	Hydroxide ion activity in segment.	pOH units
11	OXRADG(J)	Molar concentration of environmental oxidants in segment.	moles per liter
12	OCS(J)	Organic carbon content of sediments as fraction of dry weight.	dimensionless

13	PCTWA(J)	Percent water in benthic sediments, expressed as fresh/dry weight; all values must be greater than or equal to 1.	dimensionless
14	DSPSED(J)	Fraction of sediment volume that mixes.	dimensionless
15	PHG(J)	Hydrogen ion activity in segment.	pH units
16	WS(J)	Spatially variable parameter denoting settling rate of suspended sediment in water column segments (types 1 and 2), erosion rate of surface bed sediment in surface bed segment (type 3), or percolation of pore water through subsurface bed segments (type 4).	meters per day (1, 2) cm per year (3) cubic feet per second (4)
17	CMPETG(J)	Single-valued zenith light extinction coefficients (for water segments only).	per meter
18	TOTKG(J)	Total first order decay rates calculated externally. If equal to zero, the program evaluates all separate processes and calculates a combined total first order decay rate internally.	per day

4.8 CARD GROUP H - CONSTANTS

4.8.1 Number of Constants

5
NCONS
FORMAT (I5)

NCONS = number of constants required by the model = 66.

4.8.2 Constants

5	15 20	30 35	45 50	60 65	75
EBHG1	*.*EBHG2	*.*EBHG3	*.*ENHG1	*.*ENHG2	*.*
ENHG3	*.*EAHG1	*.*EAHG2	*.*EAHG3	*.*KAHG1	*.*
KAHG2	*.*KAHG3	*.*KBHG1	*.*KBHG2	*.*KBHG3	*.*
KNHG1	*.*KNHG2	*.*KNHG3	*.*EOXG1	*.*EOXG2	*.*
EOXG3	*.*KOXG1	*.*KOXG2	*.*KOXG3	*.*KBWG1	*.*
KBWG2	*.*KBWG3	*.*QTBW1	*.*QTBW2	*.*QTBW3	*.*
KBSG1	*.*KBSG2	*.*KBSG3	*.*QTBS1	*.*QTBS2	*.*
QTBS3	*.* KOC	*.* KOW	*.* OCB	*.*	
		. MWTG	*.*HENRY	*.*VAPRG	*.*
KVOG	*.* SOLG	*.*ESOLG	*.*EVPRG	*.*EHENG	*.*
		FAC	*.* KDPG	*.*RFLAT	*.*
CLOUD	*.* LATG	*.*DFACG	*.*QUAN1	*.*QUAN2	*.*
QUAN3	*.* XJTR	*.*CTRIG	*.*DTOPT	*.*TDINT	*.*
LOPT	*.*				

Note that there are additional elements in the constant array but that they are internally calculated and not read-in. Numbers 1, 2, and 3 refer to dissolved, sediment sorbed, and biosorbed chemical, respectively. KNHG2, for example, is the neutral hydrolysis rate for the sediment-sorbed chemical fraction. Although contained in the glossary section, a brief description of constants and units follows.

Constant	Fortran Variable	Description	Units
1,2,3	EBHG(I,1)	Arrhenius activation energy of specific-base-catalyzed hydrolysis of the toxicant.	kcal/gram mole
4,5,6	ENHG(I,1)	Arrhenius activation energy of neutral hydrolysis of the toxicant.	kcal/gram mole

7,8,9	EAHG(I,1)	Arrhenius activation energy of specific-acid-catalyzed hydrolysis of the toxicant.	kcal/gram mole
10,11,12	KAHG(I,1)	Second-order rate constants for specific-acid-catalyzed hydrolysis of chemical.	per mole[H+] per hour
13,14,15	KBHG(I,1)	Second-order rate constants for specific-base-catalyzed hydrolysis of chemical.	per mole [OH-] per hour
16,17,18	KNHG(I,1)	Rate constants for neutral hydrolysis of organic chemical.	per hour
19,20,21	EOXG(I,1)	Arrhenius activation energy of oxidative transformation of the chemical.	kcal/gram mole
22,23,24	KOXG(I,1)	Second-order rate constants for oxidative transformation of toxicant.	liter per mole environmental oxidant per hour
25,26,27	KBACWG(I,1)	Second-order rate constants for water column bacterial biolysis of the organic chemical.	ml/cell-hour
28,29,30	QTBAWG(I,1)	Q-10 values for bacterial transformation rate in the water column. Q-10 is the increase in the second-order rate constant resulting from a 10 degree C temperature increase.	dimensionless
31,32,33	KBACSG(I,1)	Second-order rate constants for benthic sediment bacterial biolysis of the organic.	ml/cell-hour
34,35,36	QTBASG(I,1)	Q-10 values for bacterial transformation of organic chemical in benthic sediments. The Q-10 is the increase in the second-order rate constant resulting from a 10 degree C temperature increase.	dimensionless
37	KOC	Organic carbon partition coefficient.	l_w/kg organic carbon
38	KOW	Octanol water partition coefficient	l_w/loct

39	OCB	Organic carbon content of the compartment biomass as a fraction of dry weight.	dimensionless
43	MWTG	The molecular weight of the chemical.	grams per mole
44	HENRYG	Henry's Law constant of the toxicant.	Atmosphere-cubic meters per mole
45	VAPRG	Vapor pressure of compound.	torr
46	KVOG	Measured experimental value for (volatilization) liquid-phase transport resistance, expressed as a ratio to the reaeration rate.	dimensionless
47	SOLG	Aqueous solubility of toxicant chemical species.	mg/l_T
48	ESOLG	Exponential term for describing solubility of the toxicant as a function of temperature (see SOLG).	kcal/gram mole
49	EVPRG	Molar heat of vaporization for vapor pressure described as a function of temperature (See VAPRG).	kcal/gram mole
50	EHENG	Constant used to compute Henry's Law constants for volatilization as a function of environmental temperatures (TCELG). When EHENG is non-zero, the Henry's Law constant is computed as follows: log HENRY = HENRYG-((1000.*EHENG)/(4.58*(TCELG+273.15)))	kcal/gram mole
53	FAC	Multiplication factor for sedimentation time step. Recommended 0.1.	dimensionless
54	KDPG	A near-surface photolytic rate constant for the chemical.	per hour
55	RFLATG	Reference latitude for corresponding direct photolysis rate constant KDPG.	degrees and decimal fraction (e.g., 40.72)
56	CLOUDG	Average cloudiness in tenths of full sky cover.	dimensionless, range of 0.0 to 10.0

57	LATG	Geographic latitude of ecosystem.	degrees and tenths (e.g. 37.2)
58	DFACG	Distribution function (ratio of optical path length to vertical depth).	dimensionless
59,60,61	QUANTG(I,1)	Reaction quantum yield in photolytic transformation of chemical.	dimensionless
62	XJTR	Reference segment for triggering event and frequency output. A value of zero will disable it.	dimensionless
63	CTRIG	Trigger concentration that defines a peak event.	mgc/l_T
64	DTOPT	Option to optimize time step, if set to 1.	dimensionless
65	TDINT	Time interval between recalculation of decay rates.	days
66	LOPT	Option to read in flows and/or nonpoint source loads on a daily basis: 0 = skip daily read option 1 = read sequential tape containing daily flows and/or loads	dimensionless

4.9 CARD GROUP I - MISCELLANEOUS TIME FUNCTIONS

The definition of the miscellaneous piecewise linear time functions will vary depending upon the structure and the kinetics of the systems comprising each model. The input format, however, is constant and is detailed below.

4.9.1 Number of Time Functions

5
NFUNC
FORMAT (I5)

NFUNC = number of time functions required by the model = 5.

If no time functions are to be inputted, set NFUNC equal to zero, and go to Card Group K.

4.9.2 Time Functions

The following package of cards is required for each time function. The first sub-package defines the function name and the number of breaks in the time function. The second sub-package contains a detailed specification of the piecewise linear time function.

Sub-Package I

	5	10
	ANAME(K)	NOBRK(K)
FORMAT (A5, I5)		

ANAME(K) = an optional one to five alpha-numeric character descriptive name for the time function K.

NOBRK(K) = number of breaks used to describe the time function K.

Sub-Package II

	10	20	30	40
	VALT(K)	T(K)	VALT(K+1)	T(K+1)

	50	60	70	80
	VALT(K+2)	T(K+2)	VALT(K+3)	T(K+3)
FORMAT (8F10.0)				

VALT(K) = value of the function at time T(K).

T(K) = time in days. If the length of the simulation exceeds T(NOBRK), the time function will repeat itself, starting at T(1), i.e., the approximation is assumed to be periodic, with period equal to T(NOBRK). All time functions must have the same number of breaks and all break times must agree for all functions, i.e., T(1) must be the same for all functions, T(2) must be the same for all functions, etc.

The five time-variable functions used in TOXIWASP are listed below. These functions will usually describe seasonal variability for long simulations. They can be set up, however, to describe diurnal variability over short simulations if the time step is sufficiently short (1-3 hours).

Time Function	Fortran Variable	Description	Units
1	TEMPN	Normalized temperature	dimensionless
2	WINDN	Normalized wind speed	dimensionless
3	PHN	Normalized pH	dimensionless
4	POHN	Normalized pOH	dimensionless
5	LIGHTN	Normalized light intensity	dimensionless

4.10 CARD GROUP J - INITIAL CONDITIONS

The initial conditions are the segment concentrations for the state variables at time zero (or the start of the simulation).

4.10.1 Initial Conditions

5	15	20	30
ANAME(K)	C(ISYS,K)	ANAME(K+1)	C(ISYS,K+1)

35	45	50	60
ANAME(K+2)	C(ISYS,K+2)	ANAME(K+3)	C(ISYS,K+3)

FORMAT (4(A5, F10.0))

ANAME(K) = an optional one to five alpha-numeric character descriptive name for the initial condition in segment K of system ISYS.

C(ISYS,K) = initial condition in segment K of system ISYS in the appropriate units (normally mg/l or ppm).

The user will be required to input initial conditions for each system even if the system is bypassed or if the initial conditions are zero. The initial conditions are read in one system at a time (from system 1 through system NOSYS), with the concentrations being read from segment 1 through NOSEG within a system packet.

4.11 CARD GROUP K - STABILITY AND ACCURACY CRITERIA

4.11.1 Stability Criteria

10	20	30		80
CMAX(K)	CMAX(K+1)	CMAX(K+2)	....	CMAX(NOSYS)

FORMAT (8F10.0)

CMAX(K) = stability criteria for system K, i.e., the maximum concentration (normal units mg/l or ppm) for system K, which if exceeded by any segments in system K indicates that the numerical integration procedure has become unstable. If unstability occurs an appropriate message is printed and the integration procedure is terminated and a call is made to the display subroutines.

If the user sets CMAX (1) to zero, TOXIWASP will reset it to one half of the solubility or 10^{-5} M, whichever is less. This would abort runs for which the first-order rate assumption becomes invalid.

4.11.2 Accuracy Criteria

10	20	30		80
CMIN(K)	CMIN(K+1)	CMIN(K+2)	....	CMIN(NOSYS)

FORMAT (8F10.0)

CMIN(K) = originally WASP read the accuracy criteria for system K; i.e., for time variable simulations the minimum concentration (normal units mg/l or ppm) that governs integration step-size control, if the user chooses option 1. As it is not recommended that the user use this option due to numerical difficulties, just set CMIN = 0.0 for each system.

4.12 CARD GROUP L - INTERMEDIATE PRINT CONTROL

4.12.1 Print Interval

10
PRINT
FORMAT (F10.0)

PRINT = print interval in days for time-variable applications. NOTE: The maximum number of print outs = total time/print interval + 1 (for time zero) must be equal to or less than 41.

4.12.2 Compartments (System - Segment) to be Displayed

ISYS(1)	ISEG(1)	ISYS(2)	ISEG(2)	...	ISYS(8)	ISEG(8)
FORMAT (16I3)						

ISYS(K), ISEG(K) = system, segment combinations user wishes to have displayed during simulation - user may select a maximum of 8. NOTE: All system-segment concentrations as well as other miscellaneous calculations may be displayed at the end of the simulation, see Card Group N.

4.13 CARD GROUP M - INTEGRATION CONTROL INFORMATION

4.13.1 Integration Option - Negative Solution Option

2	4
INTYP	NEGSLN
FORMAT (2I2)	

INTYP = 1, user wishes the WASP program to determine the integration step size (based upon its own accuracy criteria). It is recommended that the user not use this option.

= 2, the user will supply the integration step sizes to be used by WASP. It is recommended that the user utilize this option.

NEGSLN = 0, a user wishes to restrict integration to the positive plane only - this is the normal option selected.

= 1, user will permit the integration procedure to go negative - used for special applications (ex., DO deficit, pH - alkalinity).

4.13.2 Time Warp Scale Factor - Starting Simulation Time (TZERO)

	10	20
	SCALT	TZERO
FORMAT	(2E10.4)	

SCALT = time warp scale factor - allows the user to completely change the time scale of his simulation via just one card. This scale factor changes all times employed in piecewise linear functions or piecewise linear approximations for volumes, exchanges, flows, etc., as well as print out time.

TZERO = prototype time for start of simulation, usually equal to zero, but user may start at time other than zero (used to initialize any of the piecewise linear time functions).

4.13.3 Number of Integration Step Sizes

	5
	NOSTEP
FORMAT	(I5)

NOSTEP = number of integration step sizes to be used in the simulation.

4.13.4 Integration Step Size History

	10	20	30	40	
	DT(K)	TIME(K)	DT(K+1)	TIME(K+1)	...
FORMAT	(8F10.0)				

DT(K) = integration step size (normal units-days).

TIME(K) = time until which step size DT(K) will be used, then switching to DT(K+1) until TIME(K+1).

4.14 CARD GROUP N - DISPLAY PARAMETERS

The cards presented for this group are those required by the normal WASP display package. A special subroutine that permits off-line digital pen plotting capability is available for the DEC PDP system. The input data required are described here.

The following two sub-groups are read for each system, starting with system 1 and running through system NOSYS. For each variable-segment combination chosen a time history of the segment will be displayed (dumped).

4.14.1 Variable Names

8	16		80
ANAME(1)	ANAME(2)	....	ANAME(10)

FORMAT (10A8)

ANAME(K) = a one to eight alpha-numeric character descriptive name for display variable K. The order of these names is determined via the appropriate disk file WRITE in the users kinetic subroutine. NOTE: In TOXIWASP, the following variables are dumped: for system 1, CHEM, CHEM1, CHEMS, CHEMB, ALPHA(1), ALPHA(2), XMASS, and BMASS; for system 2, SED, DEPTHG, TOTKL, PHOTKL, HYDRKL, BIOLKL, OXIDKL, VOLKL.

4.14.2 Variable Number, Segment Numbers

3	6	9		27
VARNO	SEG(K)	SEG(K+1)	....	SEG(K+7)

FORMAT (9I3)

VARNO = the position of the desired display variable in the WRITE file statement in the kinetic subroutine (see previous note). VARNO = 1 to 8.

SEG(K) = segment number to be displayed. NOTE: Order of display unimportant, i.e., need not be sequential.

A blank card terminates display for system, ISYS. Then another Variable Name card, followed by Variable Number, Segment Number card(s) is read until system NOSYS has been read, then the plot cards will be read.

4.14.3 Printer Plot Display Cards

The following cards are read for each system, starting with system 1, and running through NOSYS. The printer plot display sub-group requires 3 cards per plot, and because two plots are formulated per page of printout, the user should input an even number of plots.

3a. Number of Segments and Variable Number for This Plot

2	4
NSPLT	VARNO

FORMAT (2I2)

NSPLT = number of segments to be plotted (maximum of five).

VARNO = the position of the desired variable to be plotted, in the WRITE file statement in the kinetic subroutine.

3b. Plotting Scales

10	20
PMIN	PMAX

FORMAT (2F10.0)

PMIN, PMAX = minimum and maximum values, respectively, to be used for this plot.

3c. Segment to be Plotted

3	6		9
SEG(1)	SEG(2)	....	SEG(INSPLT)

FORMAT (5I3)

SEG(K) = segment numbers to be plotted (a maximum of 5 segments per plot is allowed).

A blank card terminates the plotting for system, ISYS.

At this point, unless the user has written additional display routines (such as the PDP graphics), WASP input is finished, and the user should end his deck with the appropriate end of data set indicator.

4.14.4 Plot Display Cards (Spatial Profile)

Cards 4a and 4b are read-in once, and apply to all spatial plots. There are two types of spatial plots. The first type plots predicted variables, and is controlled by Cards 4c and 4d. The second type plots observed data, and is controlled by Cards 4e, 4f, and 4g. Any number of plots desired can be produced by repeating card combinations 4c-4d and/or 4e-4g.

4a. Spatial Scale

5	10
RM1	RM2

FORMAT (2F5.0)

RM1, RM2 = minimum and maximum river mile values, respectively, to be used for all spatial plots.

4b. Segment River Miles to be Plotted

5	10	15	20	25	30	35
SEG(K)	RM(K)	SEG(K+1)	RM(K+1)	SEG(K+2)	RM(K+2)	SEG(K+3)

40	45	50	55	60	65
RM(K+3)	SEG(K+4)	RM(K+4)	SEG(K+5)	RM(K+5)	SEG(K+6)

70	75	80
RM(K+6)	SEG(K+7)	RM(K+7)

FORMAT (8(I5, F5.0))

SEG(K) = segment number to be plotted.

RM(K) = river mile value for SEG(K).

A maximum of "NOSEG" combinations of SEG-RM pairs are allowed.

For each spatial plot, Cards 4c-4d, or 4e-4g are read.

4c. Predicted Variable Plot Control Information

5	10	15	20	25	30		70
MXTIM	IVAR	YSTR	YSTP	SYSOPT	OVRLAY	...	TITL1

FORMAT (2I5, 2F5.0, 2I5, 40A1)

MXTIM = number of time selections to be included on this plot (maximum of 5).

IVAR = the position of the desired variable to be plotted in the WRITE file statement in the kinetic subroutine.

YSTR,YSTP = minimum and maximum values, respectively, to be used for the Y-axis of this plot.

SYSOPT = system number of the desired variable to be plotted.

OVRLAY = flag to cause this plot to be overlaid with the following plots.

= 0, causes this plot to be printed alone (or with preceeding plot, if OVRLAY on the preceding plot cards is set to 1).

= 1, causes this plot to be overlaid on the following plot. (Note, although any number of plots can be overlaid, we suggest a maximum of three; YSTR and YSTP values should be compatible for overlaid plots.)

TITL1 = title for plot; when overlaying plots, the first two titles and the last title will be printed.

4d. Time Selections and Characters for Predicted Variable Plot

5	10	15	20	25	26
TIM(1)	TIM(2)	TIM(3)	TIM(4)	TIM(5)	SYMTAB(1)

27	28	29	30
SYMTAB(2)	SYMTAB(3)	SYMTAB(4)	SYMTAB(5)

FORMAT (5F5.0, 5A1)

TIM(K) = time selections for this plot (1-MXTIM).

SYMTAB(K) = plot symbol associated with time TIM(K).

4e. Observed Data Plot Control Information

5	10	15	20	25	30	70	71
FLAG	IUNIT	YSTR	YSTP	NOOBS	OVRLAY	TITL1	OBSSYM

FORMAT (2I5, 2F5.0, 2I5, 40A1, 1A1)

FLAG = flag to indicate observed data.

= 99999, indicates observed data are to be plotted.

IUNIT = unit device number where observed data are to be found (default = 5; optional unit numbers are 82-89).

YSTR,YSTP = minimum and maximum values, respectively, to be used for the Y-axis of this plot.

NOOBS = number of observed data points for this plot.

OVRLAY = flag to cause this plot to be overlaid with the following plot:

= 0, causes this plot to be printed alone (or with preceding plot, if OVRLAY on the preceding plot cards is 1).

= 1, causes this plot to be overlaid on the following plot.

TITL1 = title for this plot.

OBSSYM = plot symbol associated with observed data for this plot.

If "IUNIT" on Card 4e equals zero or five, Card 4f is read and Card 4g is skipped. If "IUNIT" equals 82-89, then Card 4f is skipped and Card 4g is read.

4f. River Mile - Observed Data Values

10	20	30	40
RIVMIL(K)	VALUE(K)	RIVMIL(K+1)	VALUE(K+1)

50	60	70	80
RIVMIL(K+2)	VALUE(K+2)	RIVMIL(K+3)	VALUE(K+3)

FORMAT (8F10.0)

RIVMIL(K) = river mile location for observed data point "K".

VALUE(K) = observed value of variable at RIVMIL(K).

If "IUNIT" on Card 4e equals zero or five, Card 4g is skipped.

4g. Format Specification for Data on Auxiliary Input File "IUNIT"

1	80
FMT	

FORMAT (20A4)

FMT = format specification for observed river mile - observed data values on auxiliary input file "IUNIT" (specified on Card 4e). Must begin and end with parentheses, and contain valid formats, such as (2F5.0), (16F5.0), or (F5.0/F5.0)

4.14.5 Pen Plot Display Cards

The following cards permit the user to obtain plots of WASP results on a digital pen plotter. The pen plot software has been written such that six "variable vs. time" are generated per 11 inch x 11 inch frame. Therefore, the user must supply the following input data cards in multiples of six. The user should note that unlike the Dump and Printer Plot Display Cards which are organized by system, the Pen Plot Display Cards permit the user to mix the various system outputs on the same frame.

5a. System, Segment, Variable, and Units for This Plot

5	10	15	16	29
SYS	SEG	IVAR		UNITS

FORMAT (3I5, A14)

SYS = system number of the desired variable to be plotted.

SEG = segment number of the desired variable to be plotted.

IVAR = the position of the desired variable, to be plotted, in the WRITE file statement in the kinetic subroutine.

UNITS = an alphanumeric descriptor, which describes the units of the variable to be plotted.

5b. Plotting Scales

10	20
YMIN	YMAX

FORMAT (2F10.0)

YMIN, YMAX = minimum and maximum values, respectively, to be used for this plot.

5c. Field Data

The pen plot subroutine, WAS18, has been written so as to permit the user to overplot theory with observed field data. Basically the input data to be supplied for overplotting field data consists of four pieces of

information: a survey number, the time (relative to time zero of the WASP simulation) at which the data was collected, the value (mean value if several samples were collected and are to be aggregated) of the particular water quality parameter to be plotted, and the standard deviation of the data if applicable. The input data is read as follows.

5	10	20	30		60	70	80
SURVEY	SURVYT(1)	Y(1)	SD(1)	....	SURVYT(3)	Y(3)	SD(3)

FORMAT (I5, 3(F5.0, 2F10.0))

SURVEY = survey number for which the data were collected. Must be a number from 1 to 5. In actuality SURVEY selects the appropriate plotting symbol for plotting the field data.

SURVYT(I) = time, relative to time zero of the WASP simulation, at which data were collected. Nominal units are days.

Y(I) = the value for the water quality parameter to be plotted. If a number of samples were collected and are aggregated together than Y(I) is the aggregated sample mean.

SD(I) = the standard deviation of the aggregated sample mean (if applicable).

The following description, used together with Table 4-2, should demonstrate to the user how to prepare data input for the plots. The user will be plotting phytoplankton and secchi depth results for segment 1 through 3 of his model. The kinetic subroutine was written such that the phytoplankton were written to the first system file as the first variable (SYS = 1, IVAR = 1) and, the secchi depths were written to the second system file as the fourth variable (SYS = 2, IVAR = 4). Cards 1, 7, 16, 19, 22, and 27 specify that phytoplankton and secchi depth are to be plotted for segments 1, 2, and 3, respectively. Cards 2, 8, 17, 20, 23 and 28 select the plotting scales to be used for the appropriate variables. Cards 3 through 5 contain the field data (times, means, and standard deviations) to be overplotted with the theory for segment 1. Card 6 indicates that no more survey data was collected for segment 1. Cards 9 through 14 contain the field data, from three different surveys, to be overplotted with segment 2 theory. Note that the data for the third survey are just grab samples (no associated standard deviations). Card 15 indicates the end of survey data for segment 2. Card 17 contains grab sample data collected on the third survey; Card 18 indicates no more survey data for segment 3.

No secchi depth field data was collected for segments 1 and 3; therefore the cards following cards 20 and 28 are blank. Cards 24 and 25 contain single point measurements of secchi depth collected during survey 2. Card 26 indicates the end of survey data. Card 30 indicates that no more plots are required.

TABLE 4-2. PEN PLOT EXAMPLE

Card Number											
1	1	1	1	UGMS/L							
2		0.0		5.0							
3	1	15.		1.2	0.7	43.	1.0	0.4	90.	1.75	0.6
4	1	180.		3.2	1.1	233.	2.1	0.76	271.	1.43	0.6
5	1	311.		0.9	0.41						
6											
7	1	2	1	UGMS/L							
8		0.0		5.0							
9	1	15.		1.1	0.8	43.	0.89	0.5	90.	1.93	0.64
10	1	180.		2.97	0.93	233.	2.61	0.4	271.	1.14	0.5
11	1	311.		0.76	0.46						
12	2	210.		2.54	0.86	245.	1.76	0.7	285.	1.0	0.41
13	2	320.		0.76	0.33	360.	0.89	0.7			
14	3	60.		1.4		182.	2.6		305.	1.04	
15											
16	1	3	1	UGMS/L							
17	3	60.		1.23		182.	1.97		305.	0.89	
18											
19	2	1	4	/METER							
20		0.0		10.0							
21											
22	2	2	4	/METER							
23		0.0		10.0							
24	2	21.0		3.2		245.	4.6		285.	5.15	
25	2	320.		3.7		360.	3.65				
26											
27	2	3	4	/METER							
28		0.0		10.0							
29											
30											

SECTION 5
OPERATIONAL CONSIDERATIONS

This chapter describes how to obtain the computer program TOXIWASP, how to install it on a DEC PDP mini computer or an IBM mainframe, how to test the program with sample datasets, and what machine limitations limit the program.

5.1 AQUISITION PROCEDURES

To obtain the program TOXIWASP along with sample datasets and support software, write to:

Center for Water Quality Modeling
Environmental Research Laboratory
U.S. Environmental Protection Agency
College Station Road
Athens, GA 30613

Specify which version of the program you desire (PDP or IBM) and the system on which you will install the program. A nine-track magnetic tape will be mailed to you. Please copy the contents and return the tape.

5.2. INSTALLATION PROCEDURES

Among the datasets on the magnetic tape are the standard WASP subroutines and the special TOXIWASP subroutines. These must be compiled and linked into a task image. This is accomplished on the PDP IAS operating system by running the command file "TOXICMP.CMD," which is listed in Appendix 3.2. If the compilation suceeds, then linkage is automatically attempted with the command file "TOXITKB.CMD," which is listed in Appendix 3.2. The Job Control Language (JCL) necessary to accomplish these two tasks on an IBM 370 OS/MVS operating system is listed in Appendix 3.3.

5.3. TESTING PROCEDURES

Once TOXIWASP is installed, the sample input datasets should be run and compared with the sample output datasets to verify that the program is calculating correctly. Data sets describing a sample pond, river, and oligotrophic lake polluted with various chemicals are available on the tape. Simulations are run in a batch mode. To perform a simulation on the

PDP, submit the batch input sequence "TOXIC.BIS," which is listed in Appendix 3.4. This BIS file is set up to run the test pond. To run the test river, change the line

$COPY POND.INP WASP.INP

to

$COPY RIVER.INP WASP.INP

and resubmit "TOXIC.BIS." The test lake is titled LAKE.INP. Output written to FOR006.DAT should be compared to POND.OUT, RIVER.OUT, and LAKE.OUT, respectively.

JCL necessary to run simulations for the three test cases on an IBM 370 is listed in Appendix 3.5.

5.4. MACHINE LIMITATIONS

Currently, TOXIWASP is set up for the following configurations.

PDP 11/70 Hardware	IBM 370 Hardware
IAS operating system	OS/MVS operating system
FORTRAN IV	FORTRAN IV+
25 parameters	25 parameters
85 constants	85 constants
50 segments	100 segments
2 systems	2 systems

The PDP 11/70 computer utilizing an IAS operating system allocates a 32k word (64k byte) user area for execution of programs. TOXIWASP occupies at least 31k words of memory. Any enlargement of this program may result in an overflow of the user area.

A compromise in the size of the program arrays (regulated by the PARAMETER statements at the beginning of the common area) will result in more free area to add other applications. Care must be taken to assure that any changes made to the code are completely researched and tested.

REFERENCES

Burns, L. A., D. M. Cline, and R. R. Lassiter. 1982. EXposure Analysis Modeling System (EXAMS): User Manual and System Documentation. U.S. Environmental Protection Agency, Athens, GA. EPA-600/3-82-023.

Covar, A. P. 1976. "Selecting the Proper Reaeration Coefficient for Use in Water Quality Models." Presented at the U.S. EPA Conference on Environmental Simulation and Modeling, April 19-22, 1976.

DiToro, D. M., J. J. Fitzpatrick, and R. V. Thomann. 1982. Water Quality Analysis Simulation Program (WASP) and Model Verification Program (MVP) - Documentation. Hydroscience, Inc., Westwood, NY, for U.S. Environmental Protection Agency, Duluth, MN, Contract No. 68-01-3872.

Huber, W. C., Heaney, J. P., Medina, M. A., Peltz, W. A., Sheikh, H., and Smith, G. F., Storm Water Management Model User's Manual, Version II, University of Florida, Gainesville, FL, for U.S. Environmental Protection Agency, Cincinnati, OH, EPA-670/2-75-017, March 1975.

Johanson, R. C., J. C. Imhoff, and H. H. Davis, Jr. 1980. Users Manual for Hydrological Simulation Program--FORTRAN (HSPF). U.S. Environmental Protection Agency, Athens, GA. EPA-600/9-80-015.

Karickhoff, S. W., D. S. Brown, and T. A. Scott. 1979. Sorption of hydrophohic pollutants on natural sediments. Water Research, 13: 241-248.

Mackay, D. and P. J. Leinonen. 1975. Rate of evaporation of low solubility contaminants from water bodies to atmosphere. Environ. Sci. Technol., 9:1178-1180.

Mill, T., W. R. Mabey, P. C. Bomberger, T. W. Chou, D. G. Hendry, and J. H. Smith. 1982. Laboratory Protocols for Evaluating the Fate of Organic Chemicals in Air and Water. U.S. Environmental Protection Agency, Athens, GA. EPA-600/3-82-0220 (In press).

Onishi, Y., S. M. Brown, A. R. Olsen, M. A. Parkhurst, S. E. Wise, and W. H. Walters. 1982. Methodology for Overland and Instream Migration and Risk Assessment of Pesticides. U.S. Environmental Protection Agency, Athens, GA. EPA-600/3-82-0240 (In press).

Onishi, Y. and S. E. Wise. 1982. User's Manual for the Instream Sediment-Contaminant Transport Model, SERATRA. U.S. Environmental Protection Agency, Athens, GA. EPA-600/3-82-0550 (In press).

Paris, D. F., D. L. Lewis, J. T. Barnett, and G. L. Baughman. 1975. Microbial Degradation and Accumulation of Pesticides in Aquatic System. U.S. Environmental Protection Agency, Washington, DC. EPA-660/3-75-007.

Rao, P. S. C. and J. M. Davidson. 1980. Estimation of Pesticide Retention and Transformation Parameters Required in Nonpoint Source Pollution Models. In: Environmental Impact of Nonpoint Source Pollution, M. R. Overcash and J. M. Davidson, Eds. Ann Arbor Science, Ann Arbor, MI. pp. 23-67.

Richardson, W. L., V. E. Smith, and R. Wethington. 1982. Dynamic Mass Balance of PCB and Suspended Solids in Saginaw Bay--A Case Study. U.S. Environmental Protection Agency, Grosse Ile, MI, In Press.

Smith, J. H., W. R. Mabey, N. Bohonos, B. R. Holt, S. S. Lee, T-W. Chou, D. C. Bomberger, and T. Mill. 1977. Environmental Pathways of Selected Chemicals in Freshwater Systems. Part I: Background and Experimental Procedures. U.S. Environmental Protection Agency, Athens, GA. EPA-600/7-77-113.

Thomann, R. V. 1982. Development of a Physio-Chemical Model of Toxic Substances in the Great Lakes. Manhattan College, NY, for U.S. Environmental Protection Agency, Grosse Ile, MI, Cooperative Agreement No. CR105916010, In Press.

Tsivoglou, E. E. and J. R. Wallace. 1972. Characterization of Stream Reaeration Capacity. U.S. Environmental Protection Agency, Washington, DC. EPA-R3-72-012.

Wolfe, N. L., R. G. Zepp, G. L. Baughman, and J. A. Gordon. 1975. Kinetic Investigation of Malathion Degradation in Water. Bull. Environ. Contam. Toxicol., 13:707-713.

Wolfe, N. L., R. G. Zepp, G. L. Baughman, and D. M. Cline. 1977. Kinetics of Chemical Degradation of Malathion in Water. Environ. Sci. Technol., 11:88-93.

Zepp, R. G., N. L. Wolfe, J. A. Gordon, and G. L. Baughman. 1975. Dynamics of 2,4-D Esters in Surface Waters: Hydrolysis, Photolysis, and Vaporization. Environ. Sci. Technol., 9:144-150.

Zepp, R. G. and D. M. Cline. 1977. Rates of Direct Photolysis in Aquatic Environment. Environ. Sci. Technol., 11:359-366.

APPENDIX 1:
GLOSSARY

PART 1: GLOSSARY ABBREVIATIONS

L - Local Variable
P - Parameter (i.e. depends on segment)
C - Constant
T - Time function
P* - Parameter from main program

SE - TOXISETL
SD - TOXISEDW
PO - TOXIPHOT
WA - TOXIWASPB
VO - TOXIVOLT
DU - TOXIDUMP
IN - TOXINIT
FI - TOXIFORD
RE - TOXIREOX

PART 2: UNIT ABBREVIATIONS

°C - degrees Celcius
cm - centimeters
ft - feet
g - grams
hr - hours
kcal - kilocalories
kgb - kilograms biomass (dry weight)
kgs - kilograms sediment (dry weight)
L - length
loct - liters of octonol
l_w - liters of water in segment
l_T - liters total volume of segment
M - mass
$\underline{M}$ - molarity, moles per liter
m - meters
MCF - million cubic feet total volume
MCF_w - million cubic feet of water in segment
mi - miles
mg - milligrams
mgb - milligrams biomass (dry weight)
mgc - milligrams chemical
mgs - milligrams sediment
ml - milliliters
n - moles chemical
sec - seconds
T - time
ug - micrograms
ugc - micrograms chemical

PART 3: VARIABLES AND CONSTANTS IN TOXIWASP SUBROUTINES

A(J) P*

Cross sectional area between exchanging sediment and water compartments, input in subroutine WASP2.

Units: square feet

ACBACG(J) P(WA,IN,FI)

Proportion of bacterial population that actively degrades toxicant. If the biolysis rate constants are not based on natural mixed bacterial populations, the total bacterial populations (BACTOG) given for each compartment can be modified via ACBACG to give the size of the population that is actively degrading the toxicant.

Units: dimensionless ratio, nominal range 0.0 to 1.0

ACBACL L(FI)

Active bacterial population for segment being considered. Equal to BACTOG(J).

Units: Water column compartments: cells per milliliter
Benthic compartments: cells per milliliter pore water

ALPHA (I) L(WA,FI,DU,SE,SD)

The values of ALPHA are distribution coefficients (fraction of total concentration of toxicant (Y) present as a particular species/form configuration of the molecule) for each ecosystem compartment. ALPHA vector represents the partitioning of each species among three physical forms (dissolved, sediment-sorbed, biosorbed). ALPHAs are calculated internally from the parameters, constants, and state variables describing the segment, including the predicted concentration, the sediment, the biomass, the octonol-water partition coefficient, etc. In the output these ALPHAs are designated by DISSF, SEDF and BIOLF.

ALPHA(1)
Fraction of toxicant present as the neutral molecule (SH2) dissolved in the water phase of the compartment.

ALPHA(2)
Fraction present as neutral molecule sorbed with sediment phase of compartment.

ALPHA(3)
Fraction present as neutral molecule sorbed with compartment biomass.

ALPH1M L(WA,SD)

Fraction of chemical dissolved in the water phase of the segment immediately above the bed. Equal to ALPHA(1) for that segment. Transferred to subroutine TOXISEDW for calculation of bed-water column mixing of chemical.

ALPH2M L(WA,SD)

Fraction of chemical sorbed onto sediment phase of the segment immediately above the bed. Equal to ALPHA(2) for that segment. Transferred to subroutine TOXISEDW for calculation of bed-water column mixing of chemical.

BACTOG(J) P(WA,IN,FI)

Bacterial population density in each compartment.

Units: Water column compartments: cells per milliliter
Benthic compartments: cells per 100 grams dry weight of sediment

Internally, BACTOG(J) is multiplied by ACBACG(J) to give active population density. For the sediment, BACTOG is converted to cells per milliliter pore water. The conversion used is:

$$BACTOG(J) = BACTOG(J) * SED/FRW(1E08)$$

where:

$$BACTOG = \frac{cells}{100\ g} = \frac{cells}{100 * 1000\ mgs}$$

$$FRW = \frac{l_W}{l_T} = \frac{ml_W}{l_T} * 1000$$

$$SED(mg/ml) = (1/1000)SED(mg/l_T)/FRW$$

BETA L(VO)

Same as ALPHA(1) for water compartments that intersect surface.

BIOFAC L(WA)

Intermediate variable for determining fraction of chemical sorbed onto biological phase of a segment.

BIOMAS(J) P(WA,IN,FI)

Total actively sorbing biomass in each ecosystem compartment. This parameter is used in computation of sorption of the toxicant with plant/animal material in the ecosystem compartments. The parameter is interpreted differently for the water column versus the benthic compartments. For a water column compartment, total biomass must be expressed as milligram (dry weight) per liter of water in the compartment, and it includes all biomass subject to biosorptive exchange with that water. In the case of benthic compartments,

BIOMAS is the total biomass of the benthic infauna and other components in grams (dry weight) per square meter of bottom.

Note that in this simplification from EXAMS, movable biomass (e.g. plankton) is not distinguished from stationary biomass (e.g., roots). This is a potential source of error in systems having high biotic content.

Units: Water column compartments: mg (dry weight) per liter
Benthic compartments: grams (dry weight) per square meter

BIOLKL L(WA,FI,DU)
Total pseudo-first-order degradation rate constant (per hour) for bacterial biolysis.

Units: per hour

BIOTMG(J) P(WA,FI)
Biotemperature in each ecosystem compartment, i.e. temperature to be used in conjunction with Q-10 expressions for biolysis rate constants. This parameter is separated from the physical temperature input data (TCELG) in order that the input data can reflect Q-10 averaging of an observed temperature time-series.

Units: degrees C.

BMASS(J) L(WA,FI,SE)
Mass of chemical lost from the network during the simulation. Chemical can be lost by volatilization through a surface water segment or burial through a bottom bed segment.

Units: kg

BOTLIT L(PO,IN)
Light level at bottom of compartment

Units: dimensionless, fraction of incident light level

BURY L(SE)
Net burial or erosion rate of top benthic segment. Equal to the time variable depth of sediment settling in from the overlying water column minus the time-constant depth of sediment eroding. Both the settling and erosion rates are entered through the spatially-variable parameter WS (J).

Units: meters per year

BVOLO(J) L(WA,FI,SE)
Volume of the surface bed segment at time 0. The volume of the surface bed segment is reset to BVOLO during the compaction cycle.

Units: MCF

CBB, CBW, CSB, CSW, CTB, CTW, C1B, C1W L(WA,DU)

CBB: Concentration of chemical sorbed onto biological phase of bed segment JSTR. Values transferred to TOXIDU every 3 hours for saving on the statistical file.

Units: ug/g

CBW: Concentration of chemical sorbed onto biological phase of water segment JTR. Values transferred to TOXIDU every 3 hours for saving on the statistical file.

Units: ug/g

CSB: Concentration of chemical sorbed onto sediment phase of bed segment JSTR. Values transferred to TOXIDU every 3 hours for saving on the statistical file.

Units: mgc/kgs

CSW: Concentration of chemical sorbed onto sediment phase of water segment JTR. Values transferred to TOXIDU every 3 hours for saving on the statistical file.

Units: mgc/kgs

CTB: Total concentration of chemical in bed segment JSTR. Values transferred to TOXIDU every 3 hours for saving on the statistical file.

Units: mgc/l_T

CTW: Total concentration of chemical in water segment JTR. Values transferred to TOXIDU every 3 hours for saving on the statistical file.

Units: mgc/l_T

C1B: Concentration of chemical dissolved in water phase of bed segment JSTR. Values transferred to TOXIDU every 3 hours for saving on the statistical file.

Units: mgc/l_w

C1W: Concentration of chemical dissolved in water phase at water segment JTR. Values transferred to TOXIDU every 3 hours for saving on the statistical file.

Units: mgc/l_w

CHEM L(WA,SE,SD)

Chemical concentration in segment, equivalent to C(J,1)

Units: mg/l_T

CHEM1, CHEM2, CHEM3, CHEMB, CHEMS, CHEMW L(DU)

CHEM1: Chemical dissolved in water phase of current segment.

Units: mgc/l_T

CHEM2: Chemical sorbed onto sediment phase in current segment.

Units: mgc/l_T

CHEM3: Chemical sorbed onto biological phase in current segment.

Units: mgc/l_T

CHEMB: Chemical sorbed onto biological phase in current segment.

Units: $ugc/g_{biomass}$

CHEMS: Chemical sorbed onto sediment phase in current segment.

Units: mgc/kgs

CHEMW: Chemical dissolved in water phase of current segment.

Units: mgc/l_W

CHEM1S, CHEM2S, CHEMSS L(SD)

CHEM1S: Chemical concentration dissolved in pore water in bed segment

Units: mgc/l_W

CHEM2S: Chemical concentration sorbed on sediment in bed segment

Units: mgc/l_T

CHEMSS: Chemical concentration sorbed on sediment in bed segment

Units: mgc/kgs

CHEM1W, CHEM2W, CHEMSW L(SD)

CHEM1W: Chemical concentration dissolved in water segment above bed segment

Units: mgc/l_T

CHEM2W: Chemical concentration sorbed on sediment in water segment above bed segment

Units: mgc/l_T

CHEMSW: Chemical concentration on sorbed sediment in water segment above bed segment

Units: mgc/kgs

CLOUDG C(WA,FI,PO)

Average cloudiness in tenths of full sky cover.

Units: dimensionless, range of 0.0 to 10.0

CMAX(9) L(WA,IN)

The concentration of a 10^{-5} molar solution of chemical, or half the chemical solubility, whichever is less. CMAX(9) is used to abort the simulation whenever dissolved chemical concentration rises above this limit. This prevents violation of the model's first-order kinetics assumption. This check is activated only when CMAX(1) is set to 0.

Units: mgc/l_W

CMAX(10) L(IN)

Half the chemical solubility.

Units: mgc/l_W

CMPETG(J): P(WA,PO)

Single-valued zenith light extinction coefficients for water columns, dummy variable for benthic compartments.

Units: per meter

This coefficient is based on external calculations described in EXAMS. The user is referred to the EXAMS manual (2.3.3.2.2.) and Fig. 2.18.

COND L(VO)

Inverse of addition of series resistances of gas and liquid interfaces.

Units: meters per hour

CTRIG C(WA,IN,DU)

Trigger concentration that defines a peak event. When the chemical concentration in segment JTR rises above CTRIG, a peak event is flagged. Concentrations for all segments are printed out every 3 hours until the concentration falls below CTRIG and the event

ends. This option is designed to catch high transient concentrations that would be missed by the regular WASP dumps. If less frequent peak printout is desired, statement 68 in TOXIDUMP can be changed from PNEXT = 3.0 to, say PNEXT = 8.0. This would cause printouts every 8 hours during peak events. A trigger concentration of 0 will disable event printouts.

Units: mgc/l_T

DELT L(WA)

Intermediate value of simulation time step used for maximizing time step to minimize numerical dispersion and simulation cost. Ranges between 0.01 and 0.50 days.

Units: days

DENOM L(WA)

Intermediate variable for calculating fractions of chemical dissolved, sorbed onto sediment, and sorbed onto biomass.

DEPTH L(WA,SE)

Depth of segment being considered.

Units: feet

DEPTHG(J) P(WA,IN,FI,VO,PO,SE)

Depths of segments.

Units: feet

DEPTHM L(WA,PO,SE)

Depth of segment being considered.

Units: meters

DFACG C(WA,PO)

Distribution function (ratio of optical path length to vertical depth).

Units: dimensionless, values constrained to range of 1.0 to 2.0
Default value 1.19, explained in TOXIPHOT.

DISP L(SW)

Volumetric dispersion between a bed and an overlying water segment, or between two vertically adjacent bed segments. DISP is brought from WASP2 using BR(I), and is corrected internally for its resulting mixed units.

Units: MCF per second times square cm per square mile

DISPV(J) L(WA,SD)

Dispersive exchange volumes between sediment and water compartments. Water-water exchanges are calculated in WASP2. Sediment-water exchanges are calculated in TOXISEDW using characteristic lengths, areas, and dispersion from WASP2, along with porosity and other factors from TOXISEDW.

Units: million cubic feet per day

DSPSED(J) P(WA,SD)

Fraction of sediment that mixes. 1.0 is equivalent to full bed sediment dispersion, 0.0 is equal to pore water diffusion only.

Units: dimensionless

DTOPT C(WA)

Option to optimize time step. If set to 1, program computes maximum time step that preserves numerical stability throughout network. Both flow volumes and dispersive exchange volumes are kept less than or equal to segment volumes. Time step can vary between 0.01 days and 0.5 days.

E(J) P*

Sediment-water dispersion coefficent input in WASP2. E is a composite of direct sorption to the sediment surface, mixing of the sediments by benthic animals, stirring by demersal fishes, etc.

Units: square centimeters per second

EAHG(I,1) C(FI)

Arrhenius activation energy of specific-acid-catalyzed hydrolysis of the toxicant.

Units: kcal/gram mole

EBHG(I,1) C(FI)

Arrhenius activation energy of specific-base-catalyzed hydrolysis of the toxicant.

Units: kcal/gram mole

EHENG C(VO)

Constant used to compute Henry's Law constants for volatilization as a function of environmental temperatures (TCELG). When EHENG is non-zero, the Henry's Law constant is computed as follows.

log HENRY = HENRYG-((1000.*EHENG)/(4.58*(TCELG+273.15)))

Units: kcal/gram mole

ENHG(I,1) C(FI)
Arrhenius activation energy of neutral hydrolysis of the toxicant.

Units: kcal/gram mole

EOXG(I,1) C(FI)
Arrhenius activation energy of oxidative transformation of the toxicant.

Units: kcal/gram mole

ESOLG C(VO)
Exponential term for describing solubility of the toxicant as a function of temperature (see SOLG).

Units: kcal/gram mole

EVPRG C(VO)
Molar heat of vaporization for vapor pressure described as a function of temperature (See VAPRG).

Units: kcal/gram mole

EXDO L(SD)
Chemical sorption rate from lower water column segment to top bed segment.

Units: MCF per day times mgc/l_T

EXUP L(SD)
Chemical desorption rate from upper bed segment to lower water column segment.

Units: MCF per day times mgc/l_T

FAC C(IN,SE)
Multiplication factor for sedimentation time step. Set FAC to 1.0 to eliminate numerical dispersion in the bed. For smoother output with some numerical dispersion, set FAC to 0.1.

FACTOR L(PO)
Latitude correction factor by which the photolysis rate is adjusted from the rate at the reference latitude.

FRW(J) L(WA,IN,SE,SD)
Porosity, or water fraction in sediment on a volumetric basis. Calculated from the parameter PCTWA(J).

Units: l_W/l_T

FVOL L(SE)

The fractional volume of the surface bed segment that is to be compacted into the volume of the second bed segment during the compaction cycle. The difference between FVOL and the volume of the second bed segment is SVOL, the pore water squeezed out.

Units: MCF

HENRYG C(FI,VO)

Henry's Law constant of the toxicant. If parameter EHENG is non-zero, HENRYG is used as the pre-exponential factor in computing the Henry's Law constant as a function of environmental temperature (TCELG).

Units: Atmosphere-cubic meters per mole

HENRYL L(VO)

Local value of HENRYG. If HENRYG is zero, model will calculate value.

Units: Atmosphere-cubic meters per mole

HPLUS L(FI)

Intermediate calculation in obtaining temporally averaged concentration of hydronium ions.
HPLUS = 10**(-PHG)

HYDRKL L(FI,DU)

Total pseudo-first-order rate constant (per hr) for hydrolytic transformations of the toxicant in each compatment.

Units: per hour

HYDRX L(FI)

Intermediate calculation in obtaining temporally averaged concentration of hydroxide ions.
HYDRX = 10**(-POHG)

I1, I2 L(SD)

Local variables representing segments involved in exchange. (See "IR(I), JR(I)" card group B)

ICHK L(WA)

Integer flag denoting day on which last set of daily flows and nonpoint source loads were read from auxiliary file. Saved in COMMON as TIMCHK.

ICOUNT L(DU)

Number of entries into auxiliary file for statistical analysis. Integer value of TCOUNT.

ICOL L(IN)

Subscript indicating column in table of daily flows from auxiliary file (1-10).

IL(J) P*

Characteristic length for dispersive exchange, input in WASP2.

Units: feet

INDEXS L(WA,FI)

INDEXS is an internally calculated flag designating a benthic compartment. INDEXS is 1 for benthic compartments (TYPEE = 3 or 4), 0 for water compartments (TYPEE = 1 or 2).

INDEXW L(WA,FI)

INDEXW is an internally calculated flag designating a water column compartment. It takes a value of 1 for water compartments (TYPEE = 1 or 2) and a value of 0 for benthic compartments (TYPEE = 3 or 4).

IOPT L(DU)

Flag designating type of output desired in TOXIDU.

ITCHK L(WA,IN)

Integer flag denoting whether a full day has passed since the last set of flows and nonpoint source loads were read from auxiliary file.

ITIMEC L(WA)

Integer flag denoting the current simulation day. The integer value of TIME.

ITYPE L(IN,SE)

Flag designating segment type. The integer value of TYPEE(J).

IZERO L(PO)

Light intensity at top of lower level water compartment. 0.0 to 1.0.

Units: dimensionless

JROW L(IN)

Subscript indicating row in table of daily flows from auxiliary file.

JSTR L(WA,IN,DU)

Top bed segment below water segment FTR. Concentrations in JSTR are printed out during peak "events," and are saved every 3 hours on an auxiliary statistical file.

JTR L(WA,DU)

Segment used to trigger event printouts when total chemical concentration exceeds CTRIG. Saved in COMMON as XJTR. Concentrations in JTR are printed out during peak events, and are saved every 3 hours on an auxiliary statistical file.

JL(J) P*

Characteristic length for dispersive exchange input in WASP2.

Units: feet

KAHG(I,1). C(FI)

Second-order rate constants for specific-acid-catalyzed hydrolysis of toxicant. If the corresponding entry in the Arrhenius activation energy matrix (EAHG) for this reaction is zero, the value entered in KAHG is taken as the second-order rate constant. If the corresponding entry in the activation energy matrix (EAHG) is non-zero, the value entered in matrix KAHG is interpreted as the base-10 logarithm of the frequency factor in an Arrhenius function for the reaction, and local values (KAHL) of the second-order rate constant are computed as a function of temperature (TCELG) in each system compartment.

Units: per mole[H+]per hour

KAHL L(FI)

Local value of KAHG(I,1) corrected for temperature.

Units: per mole [H+] per hour

KB L(WA,FI,IN)

Effective biomass partition coefficient. Calculated internally by multiplying OCB and KOW.

Units: l_w/kgb

KBACSG(I,1) C(FI)

Second-order rate constants for benthic sediment bacterial biolysis of the organic toxicant. If the corresponding entry in the Q-10 matrix (QTBASG) for this process is zero, the number entered in matrix KBACSG is taken as the second-order rate constant. If the corresponding entry in the Q-10 matrix is non-zero, the value entered in matrix KBACSG is interpreted as the numerical value of the second-order rate constant at 20 degrees C., and local values (KBACSL) of the rate constant are computed as a function of temperature (BIOTMG) in each ecosystem compartment.

Units: ml/cell-hour

KBACSL L(WA,FI)

Local value of KBACSG(I,1), corrected for temperature.

Units: ml/cell-hour

KBACWG(I,1) C(FI)

Second-order rate constants for water column bacterial biolysis of the organic toxicant. If the corresponding entry in the Q-10 matrix (QTBAWG) for this process is zero, the number entered in matrix KBACWG is taken as the second-order rate constant. If the corresponding entry in the Q-10 matrix is non-zero, the value entered in matrix KBACWG is interpreted as the numerical value KBACWL of the rate constant are computed as a function of temperature (BIOTMG) in each ecosystem compartment.

Units: ml/cell-hour

KBACWL L(WA,FI)

Local value of KBACWG(J), corrected for temperature.

Units: mg/cell-hour

KBHG(I,1) C(FI)

Second-order rate constants for specific-base-catalyzed hyrolysis of toxicant. If the corresponding entry in the Arrhenius activation energy matrix (EBHG) for this reaction is zero, the value entered in KBHG is taken as the second-order rate constant. If the corresponding entry in the activation energy matrix (EBHG) is non-zero, the value entered in matrix KBHG is interpreted as the base-10 logarithm of the frequency factor in an Arrhenius function for the reaction, and local values (KBHL) of the second-order rate constant are computed as a function of temperature (TCELG) in each system compartment.

Units: per mole[OH-] per hour

KBHL L(WA,FI)

Local value of KBHG(I,1), corrected for temperature.

Units: per mole [OH-] per hour

KDPG C(FI,PO)

A near-surface photolytic rate constant for the toxicant. The value of KDPG represents the outcome of an experiment conducted in natural sunlight. The constant is a temporally averaged (e.g. over whole days, seasons, etc.) first-order photolytic transformation rate constant pertaining to cloudless conditions at some reference latitude RFLATG.

Units: per hour

KDPL L(FI,PO)

Locally adjusted value of KDPG returned from TOXIPHOT.

KNHG(I,1) C(FI)

Rate constants for neutral hydrolysis of organic toxicant. If the corresponding entry in the Arrhenius activation energy matrix (ENHG) for this reaction is zero, the value entered in KNHG is taken as the rate constant. If the corresponding entry in the activation energy matrix (ENHG) is non-zero, the value entered in matrix KNHG is interpreted as the base-10 logarithm of the frequency factor in an Arrhenius function for the reaction, and local values (KNHL) of the rate constant are computed as a function of temperature (TCELG) in each system compartment.

Units: per hour

KNHL L(FI)

Local value of KNHG(I,1), corrected for temperature.

Units: per hour

KO2G(J) L(WA,IN,VO)

Reaeration parameter at 20 degrees C in each ecosystem compartment. Calculated from segment depths and velocities, and time-varying wind.

Units: centimeter per hour

KO2L L(WA,VO)

Reaeration parameters in each compartment (m/hr) after temperature adjustment and units conversion.

KOC C(WA,IN)

Organic carbon partition coefficient. Value of KOC read in or if equal to zero, calculated from KOW. Multiplication of KOC by the fractional organic carbon content (OCS) of each system sediment yields the partition coefficient for sorption of unionized (SH2) compound to the sediment.

Units: l_w/kg organic carbon

KOW C(WA,IN)

Octanol water partition coefficient Value of KOW read in, or if equal to zero, calculated from KOC.

Units: (mgc/loct)-(mgc/l_w), or l_w/loct

KOXG(I,1) C(FI)

Second-order rate constants for oxidative transformation of toxicant. If the corresponding entry in the Arrhenius activation energy matrix (EOXG) for this reaction is zero, the value entered in KOXG is taken as the second-order rate constant. If the corresponding entry in the activation energy matrix (EOXG) is non-zero, the value entered in matrix KOXG is interpreted as the base-10 logarithm of the frequency factor in an Arrhenius function for the reaction, and local values (KOXL) of the second order constants are computed as function of temperature (TCELG) in each system compartment.

Units: liter per mole environmental oxidant per hour

KOXL L(FI)

Local value of KOXG(I,1), corrected for temperature.

Units: liter per mole environmental oxidant per hour

KP(J) L(WA,IN,SE)

Effective sediment partition coefficient. Internally calculated as the product of KOC and OCS(J), and saved as Parameter 12.

Units: l_w/kgs

KT L(IN)

Daily counter for reading nonpoint source loads from auxiliary tape and printing table (1-1000).

Units: days

KVOG C(VO)

Measured experimental value for (volatilization) liquid-phase transport resistance, expressed as a ratio to the reaeration rate.

Units: dimensionless ratio

K20 L(FO,RE)

The computed reaeration rate at 20?oOC. Used to calculate the chemical volatilization rate.

Units: per day

LATG C(PO)

Geographic latitude of ecosystem.

Units: degrees and tenths (e.g. 37.2)

LIGHTL L(PO)

The average light intensity in the current compartment, as a fraction of the near-surface light intensity (taken as 1.0 or 100%).

LIGHTN T(WA,PO)

Normalized light time function, transferred through COMMON as constant 78 to TOXIPHOT. There it adjusts the average photolysis rate for seasonal light variability.

LOPT C(WA,IN)

Option to read in flows and/or nonpoint source loads on a daily basis:

0 = skip daily read option
1 = read sequential tape containing daily flows and/or loads

MOQ L(WA,IN)

Number of flow pairs read from auxilliary file daily. MOQ is read from auxilliary file by TOXINIT and passed to TOXIWASPB through COMMON as the floating point variable MOQS.

MOQS L(WA,IN)

Number of flow pairs read from auxilliary file daily. MOQS is set equal to MOQ in TOXINIT and saved in COMMON as constant 83.

MQOPT L(IN)

Flow option read from auxilliary file. Not used.

MTYPE L(IN)

Flag designating type of segment immediately above current segment. Integer value of TYPEE(J-1).

MWTG C(VO)

The molecular weight of the toxicant.

Units: grams per mole

NCOL L(IN)

Variable indicating the number of column entries in the last row of daily flows from auxilliary file.

NOWKS L(WA,IN)

Number of nonpoint source loads read from auxilliary file daily. NOWKS is read from auxilliary file by TOXINIT and passed to TOXIWASPB through COMMON as constant 84.

NPSWK(I,J) L(WA,IN)

Nonpoint source load J for constituent I (chemical or sediment), read from auxilliary file daily. The segment into which load J discharges is defined in Card Group F: Forcing Functions.

Units: million pounds per day

NWKS L(WA,IN)

Number of nonpoint source loads read from auxilliary file daily. NWKS is the integer value of NOWKS.

OCB C(WA,IN)

Organic carbon content of the compartment biomass as a fraction of dry weight. Coupled to KOW to generate biomass partition coefficient.

Units: dimensionless

OCS(J) P(WA,IN)

Organic carbon content of sediments as fraction of dry weight. Parameter is coupled to KOC to generate the sediment partition coefficient as a function of a property of the sediment.

Units: dimensionless

OXIDKL L(FI,DU)

Pseudo-first-order rate constants for oxidative transformation of toxicant.

Units: per hour

OXRADG(J) P(FI)

Molar concentration of environmental oxidants (e.g. peroxy radicals) in each ecosystem compartment.

Units: moles per liter

PCTWA(J) P(WA,IN)

Percent water in bottom sediments of benthic compartments. PCTWA(J) should be expressed as the conventional soil-science variable (fresh/dry weight); all values must be greater than or equal to 1.

Units: dimensionless

PERC L(SE)

Pore water percolation, calculated from the spatially-variable parameter WS(J) for type 4 (subsurface benthic) segments.

Units: MCF per day

PERCMS L(SE)

Mass transport rate of dissolved chemical in pore water.

Units: MCF per day times mgc/l_w

PH L(WA,FI)

Hydrogen ion activity of segment being considered. Local value of PHG(J).

Units: pH units

PHG(J) P(WA)

Hydrogen ion activity. The negative value of the power to which 10 is raised in order to obtain the temporally averaged concentration of hydronium ions [H30+] in gram-molecules per liter.

Units: pH units

PHOTKL L(FI,DU)

Pseudo-first-order rate constant for photolytic transformation of the toxicant.

Units: per hour

PHN T(WA)

Normalized time function for PH. Adjusts PHG(J) for seasonal variability.

POHN T(WA)

Normalized time function for POH. Adjusts POHG(J) for seasonal variability.

PNEXT L(WA,DU)

Triggers event printout every 3 hours during peak event period. Local value of POHG(J).

POH L(WA,FI)

Hydroxide ion activity of segment being considered. Local value of POHG(J).

Units: POH units

POHG(J) P(WA)

Hydroxide ion activity. The negative value of the power to which 10 is raised in order to obtain the temporally averaged concentration of hydroxide [OH-] ions in gram-molecules per liter.

Units: pOH units

POROS L(SD)

Porosity of top bed segment, used in computing dispersive exchange between bed and water column. For computing dispersive exchange between two bed segments, POROS is the mean porosity.

Units: l_w/l_T

PTIME L(DU)

Rounded-off value of TIME for output.

Units: days

QT(I) L(IN)

Variable for temporary storage of daily flows from auxilliary file.

QTBASG(I,1) C(FI)

Q-10 values for bacterial transformation (c.f. KBACSG) of organic toxicant in benthic sediments. The Q-10 is the increase in the second-order rate constant resulting from a 10 degree C temperature increase.

Units: dimensionless

QTBAWG(I,1) C(FI)

Q-10 values for bacterial transformation (c.f. KBACWG) of chemical in the water column of the system. Q-10 is the increase in the second-order rate constant resulting from a 10 degree C temperature increase.

Units: dimensionless

QUANTG(I,1) C(FI)

Reaction quantum yield in photolytic transformation of chemical. The quantum yield is the fraction of total quanta absorbed by the toxicant resulting in transformations. Separate values are provided for each molecular configuration of the toxicant in order to make assumptions concerning their relative reactivities readily available to the user.

Units: dimensionless

RATEK L(VO,PO)

Internally calculated rate returned from TOXIVOLT or TOXIPHOT to TOXIFORD for use as VOLKL or KDPL.

RESGAS L(VO)

Gas film resistance to volatilization.

Units: hours per meter

RESLIQ L(VO)

Liquid film resistance to volatilization.

Units: hours per meter

RFLATG C(WA)

Reference latitude for corresponding direct photolysis rate constant (c.f. KDPG).

Units: degrees and decimal fraction (e.g. 40.72)

RVOL(J) L(IN,SE)

Reference volume at which the sediment compaction cycle is initiated for surface bed segment "J". RVOL(J) is computed in TOXINIT for each surface bed segment and is stored in location RVOL(J-1) [equivalenced to VVOL(J-1)]. RVOL(J) is the surface bed volume that will hold the mass of sediment contained in the upper two bed

segments at time 0. RVOL(J) will be greater than the combined volume of the upper two bed segments at time 0 if the density of the second bed segment is greater than the top bed segment.

Units: MCF

SCALQ L(IN)

Scale factor to convert daily flows from auxiliary file to cubic feet per second.

SED L(WA,DU,SE,SD)

Sediment concentration of segment being considered.

Units: mgs/l_T

SEDCOL L(SD)

Sediment concentration after conversion to internal units (kg/liter of water) in sediment compartment.

Units: kg/l_W

SEDFAC L(WA)

Intermediate variable for determining fraction of chemical sorbed onto sediment phase of a segment.

SEDFL L(SD)

Rate of sediment mixture to the surface of the bed, allowing sorption or desorption with the overlying water. Related to the dispersive exchange of water by the spatially-varying parameter DSPSED(J).

Units: MCF (water) per day times mgs/l_W

SETINS, SETOUS L(SE)

Sediment settling into or out of compartment. These variables are transferred to TOXIWASPD to hold the values until the next call to TOXISETL.

Units: mgs/l_T-day

SETINC, SETOUC L(SE)

Chemical settling into or out of a compartment. Chemical can only settle when adsorbed to sediment.These variables are transferred to TOXIWASPD to hold the values until the next call to TOXISETL.

Units: mgc/l_T-day

SEDW L(SD)

Sediment concentration in water compartment above bed.

Units: kg/l_T

SMASS L(SE)

Mass of dissolved chemical in the pore water squeezed from the surface bed segment to the water column during the compaction cycle.

Units: MCF_w times mgc/l_w

SOLG C(VO)

Aqueous solubility of toxicant chemical species. If the corresponding value in ESOLG (c.f.) is zero, SOLG is interpreted as an aqueous solubility in mg/liter. If ESOLG is non-zero, SOLG is used in an equation describing the molar solubility of the toxicant species as a function of environmental temperature (TCELG), i.e. SOLL(mg/l) = 1000.*MWTG*10.**J(SOLG-(1000.*ESOLG/(2.303*R*(TCELG+273.15)))) Solubilities are used (inter alia) to limit the permissible external loadings of the toxicant on the system to values that generate final residual concentrations .LE. 50% of aqueous solubility (or 1.E-5M). This constraint is imposed in order to help ensure that the assumption of linear sorption isotherms is not seriously violated.

Units: mg/l_T

SOLL L(VO)

Temperature-corrected aqueous solubility of chemical

SVOL L(SE)

Volume of pore water squeezed from the surface bed segment to the water column during the compaction cycle. SVOL is the difference in volume between the surface bed segment before compaction and the top two bed segments after compaction.

Units: MCF

TCELG,TKEL L(Wa,FI,VO)

Product of segment temperature TEMPM(J) and temperature function TEMPN. Immediately converted to Kelvin temperature (TKEL) from Celsius.

TCOUNT L(IN,DU)

Number of entries into auxilliary file for statistical analysis. Stored in COMMON as constant 73.

TDINT C(WA,DU)

Time interval between recalculation of decay rates.

Units: days

TEMPM(J) P(WA)

Average temperature for compartment.

Units: degrees C

TEMPN T(WA)

Value of normalized time function describing temperature. Multiples TEMPM to give TCELG.
Unitless

TIMCHK L(WA,IN)

Day on which last set of daily flows and nonpoint source loads were read from auxiliary file. Saved in COMMON as constant 82.

Units: day

TMARK L(WA,IN)

Day on which rate constants will be recalculated. Incremented throughout simulation by TDINT.

Units: day

TMASS L(SE)

Mass of chemical transferred to the next lower bed segment during the compaction cycle. TMASS is first set to the mass of chemical in the top bed layer that is compacted into the new second bed layer (FVOL*CHEM). Once the new concentration of the second bed layer is determined, TMASS is set to the mass of chemical in the second bed layer that is buried into the new third bed layer. This is continued to the bottom bed segment, where TMASS is added to BMASS(J), the amount of chemical mass lost from the network by burial below segment J.

Units: MCF times mgc/l_T

TMPM L(SE)

Temporarily held value of TMASS, the amount of chemical transferred to the next lower bed segment during the compaction cycle.

Units: MCF times mgc/l_T

TOTKG(J) P(WA,IN)

Total first order decay rates calculated externally. If equal to zero, the program evaluates all separate processes and calculates a combined total first order decay rate, TOTKL.

Units: per day

TOTKL L(WA,FI,DU)

Value of total first-order decay rate for compartment, derived from TOTKG(J).

Units: per day

TQ L(WA)

Temporary value for flow or exchange between two segments, used for maximizing time step to minimize numerical dispersion and simulation cost.

Units: million cubic feet per day

TRT L(WA)
Test value of time step that would eliminate numerical dispersion in a segment.

Units: days

TYPEE(J) P(WA,IN,FI,PO,SE,SC)
Numerical code designating segment types used to define ecosystem. Available types: 1 = Epilimnion, 2 = Hypolimnion, 3 = Benthic (active), and 4 = Benthic (buried).

Units: dimensionless

TYP1,TYP2 L(SD)
Internal variables describing type (e.g. TYP1 = TYPEE(I1)) of interchanging compartments.

V1,V2,...,V8 L(WA,DU)
Dummy variables used in argument of calls to TOXIDU.

VAPRG C(VO)
Vapor pressure of compound. Used to compute Henry's Law constant if the latter input datum (HENRYG) is zero, but VAPRG is non-zero.

Units: torr
VAPRL is the converted value to atmospheres. L(VO)

VELOC(J) P(WA,IN)
Average velocity of water in the compartment

Units: feet per second

VOL L(WA)
Equal to BVOL(J), the volume of the compartment.

Units: million cubic feet

VOLKL L(DU,FI)
Pseudo-first-order rate constants for volatilization losses from surface water compartments.

Units: per hour

VVOL(J) L(WA,FI,SE)
A dummy array to hold parameters describing the varying surface bed segment volume.

WAT L(VO)
Piston velocity term for water vapor.

Units: meters per second

WATFL L(SD)

Dispersive exchange of water between top bed segment and water column, or between two vertically adjacent bed segments.

Units: million cubic feet per day

WIND L(WA,VO)

Local, time-varying wind speed. Equal to the average wind velocity over a segment WINDG(J) times the time function WINDN.

Units: meters per second

WINDG(J) P(WA)

Average wind velocity at a reference height of 10 cm above the water surface. Parameter is used to compute a piston velocity for water vapor (Liss 1973, Deep-Sea Research 20:221) in subroutine VOLAT.

Units: meters per second

WINDN T(WA)

Normalized wind speed as function of time.

Units: unitless

WS(J) P(SE)

Spatially variable parameter denoting settling rate of suspended sediment in water column segments (types 1 and 2), erosion rate of surface bed sediment in surface bed segment (type 3), or percolation of pore water through subsurface bed segments (type 4).

Units:
Segment types 1,2:	meters per day
Segment type 3:	cm per year
Segment type 4:	cubic feet per second

XJSTR L(WA,IN,DU)

Top bed segment below water segment JTR. Equal to JSTR, this variable is saved in COMMON as constant 75.

XJTR C(WA,IN,DU)

Reference segment for triggering event and frequency output. A value of zero will disable it. A non-zero value will cause printout of all segment concentrations when the concentration at XJTR is greater than CTRIG. Also, a time history of concentrations (every 3 hours) at XJTR and its associated benthic segment will be stored for later frequency analysis.

XMASS L(DU)

Mass of chemical in segment.

Units: kg

XXX L(PO)

Exponential light disappearance term.

XTES L(PO)

Maximum light disappearance term. After this value (87.4) no light is present.

XTST L(IN,DU)

Test variable to determine whether to set up event-triggered printout. If either CTRIG or JTR is zero, then event-triggered printout is disabled.

PART 4: VARIABLES IN WASP COMMON

The following list defines the variables contained in blank COMMON. Blank COMMON is used by WASP as the vehicle to pass information from subroutine to subroutine within the program. The R, I, and * contained within parentheses after the variable name indicate, respectively, whether the variable is a REAL (floating point), or INTEGER (fixed point), and whether the variable is read as input data.

Variable Name	Definition
IN(I)	Device number for reading input data.
OUT(I)	Device number for printer output.
NOSYS(I*)	Number of systems or water quality constituents in the user's model.
ISYS(I)	System currently having its derivatives evaluated.
ISEG(I)	Segment currently having its derivatives evaluated.
ISIM(I*)	Simulation type - currently only time variable is permitted.
LISTG(I*)	User selected option to print exchange coefficient, segment volume, advective flow and boundary condition input data.
LISTC(I*)	User selected option to print forcing function (waste load), kinetic constants, segment parameters, and miscellaneous kinetic time functions, and initial condition input data.
INITB(I)	Internal program indicator which permits the user to perform initialization or to execute special code upon initial entry to the WASPB kinetic subroutine. Initially equal to zero, INITB must be reset by the user in WASPB.

IPRNT(I)	Not currently used.
IDUMP(I*)	System - segment combinations to be printed out during the integration procedure.
IDISK(I)	When checked by the user in the kinetic subroutine, WASPB, IDISK acts as internal program indicator which informs the user when a print interval has been reached, permitting the user to write the current state variables or segment concentrations to auxiliary storage (disk). Normally IDISK equals zero, but at a print interval it is externally set to one; must be reset by the user before exiting from WASPB.
IREC(I)	Internal counter used to keep track of the number of print intervals generated during the course of the simulation.
MXDMP(I)	Blocking factor or the maximum number of variables saved per segment at each print interval.
IDFRC(I)	Used only in the DEC-PDP version as the record address pointers for the direct access dump files. Not needed for the IBM 370 version because sequential files are used.
NBCPSY(I)	Maximum number of boundary conditions permitted per system; set for a particular WASP configuration in subroutine WASP1.
NWKPSY(I)	Maximum number of forcing functions (waste loads) permitted per system; set for a particular WASP configuration in subroutine WASP1.
SYSBY(I*)	User selected system by-pass indicators. If a user wishes he may choose to by-pass computations for a particular system (or systems), ISYS, for a simulation run by setting SYSBY (ISYS) appropriately.
RBY(I*)	User selected exchange transport by-pass indicators. If a user wishes he may by-pass exchange transport for a particular system, ISYS, by setting RBY(ISYS) appropriately. (Example: if a user had incorporated rooted aquatic plants in his model he would not wish to have them "disperse").
QBY(I*)	User selected advective transport indicators. If a user wishes he may by-pass advective transport for a particular system, ISYS, by setting QBY(ISYS) appropriately. (Example: if a user had incorporated rooted aquatic plants in his model he would not wish to have them transported via flow).

NEGSLN(I*)	Indicates whether the user has chosen to permit WASP to compute negative water quality concentrations (Example: permit negative D.O. deficit, i.e., supersaturation). NEGSLN normally equals zero, but will equal one, if user choses to permit negative solutions.
TIME(R)	Current simulation time.
DT(R)	Current integration time step.
TZERO(R*)	User selectable time for start of simulation. If for example a user's input data for a model was set up such that time zero was January 1, a user may skip computations for January and February and start March 1 by setting TZERO (on input) to 59.
SCALT(R*)	Time scale factor. The nominal unit for time in WASP in days. A user may choose to run his simulation in hours by inputting SCALT to be 0.041667 (or 1/24). WASP will then interpret any time specifications (such as the print interval, integration step sizes and total simulation time and the time breaks for any piecewise linear functions) to be hours rather than days.
TEND(R)	Ending time for use of the current integration step size. For single integration stepsize input this will be the total simulation time. For multiple integration stepsize histories, when TIME equals TEND, a new integration step size will be chosen and TEND reset.
PRNT(R*)	Print interval.
OMEGA(R)	Not used in current version of WASP.
ITCHCK(R)	Not used in current version of WASP.
MXITER(R)	Not used in current version of WASP.
C(R)	State variable or water quality concentration array.
CD(R)	Derivative array.
CMAX(R*)	Stability criteria vector. The vector contains the maximum allowable segment concentration for each system. If any segment exceeds the stability criteria for any system (usually because the integration stepsize is too large) the simulation is terminated.

CMIN(R*)	Not used in current version of WASP (although user must include in his input data check).
PARAM(R*)	Segment parameters for use in the WASPB kinetic subroutine.
CONST(R*)	Constants for use in the WASPB kinetic subroutine.
EVOL(R*)	Segment volumes (nominal input units MCF, nominal internal units MFC).
MVOL(R)	Not used in current version of WASP.

The value for any time variable exchange coefficient, advective flow, boundary condition, forcing function or time-variable function utilized by the WASPB kinetic subroutine is computed using a form of the following equation

VAL = M*TIME + B

where

VAL is the desired value at time = TIME
M is the slope of the piecewise linear function used to approximate the exchange coefficient, flow, etc.
B is the intercept of the piecewise linear function.

BR(R)	Exchange coefficient intercepts.
BQ(R)	Advective flow intercepts.
BBC(R)	Boundary condition intercepts.
BWK(R)	Forcing function intercepts.
BFUNC(R)	Intercepts for the time variable functions required for the WASPS kinetic subroutine.
MR(R)	Exchange coefficient slopes.
MQ(R)	Advective flow slopes.
MBC(R)	Boundary condition slopes.
MWK(R)	Forcing function slopes.
MFUNC(R)	Slopes for the time-variable functions required for the WASPB kinetic subroutine.

Note: If any of the above are time invariant (i.e., constant in time), then the "B" vector (array) will contain the time invariant value of exchange, flow, etc., and the "M" vector (array) will contain zero slope.

IR(I*), JR(I*)	Contain the segment numbers between which exchange is to take place.
IQ(I*), JQ(I*)	Contain the segment numbers between which advective flow is to take place. If the advective flow is positive then JQ will contain the upstream segment number (from which flow is leaving) and IQ will contain the downstream segment number (to which flow will go). If, however, the advective flow is negative then JQ will be considered the downstream segment (flow to) and IQ will be considered the upstream segment (flow from).
IBC(I*)	Contains the segment numbers for which boundary conditions have been specified.
IWK(I*)	Contains the segment numbers for which forcing functions have been specified (i.e., receiving water segments for waste loads).
IVOPT(I*)	User selected volume input option. Currently WASP only permits time-invariant or constant volumes (IVOPT=1).
NOV(I*)	Number of volumes (normally NOV equals NOSEG).
IROPT(I*)	User selected exchange coefficient input option. IROPT flags the exchange coefficients as constant in time (IROPT=1) or time-variable (IROPT=2,3).
NOR(I*)	Number of exchange coefficients read.
IQOPT(I*)	User selected advective flow input option. IQOPT flags the flows as constant in time (IQOPT=1) or time-variable (IQOPT=2,3).
NOQ(I*)	Number of advective flows read.
IBCOP(I*)	User selected boundary condition input options for each system. IBCOP(ISYS) flags the boundary conditions for system ISYS as being constant in time (IBCOP(ISYS)=1) or time-variable (IBCOP(ISYS)=2,3).
NOBC(I*)	Number of boundary conditions read for each system.
IWKOP(I*)	User selected forcing functions input option for each system. IWKOP(ISYS) flags the forcing functions for system ISYS as being constant in time (IWKOP(ISYS)=1) or time-variable (IWKOP(ISYS)=2,3).
NOWK(I*)	Number of forcing functions read for each system.

NOPAM(I*)	Number of segment parameters (for use in the WASPB kinetic subroutine) read.
NCONS(I*)	Number of constants (for use in the WASPB kinetic subroutine) read.
NFUNC(I*)	Number of time variable functions (for use in the WASPB kinetic subroutine) read.
NVOLT(R)	Not used in the current version of WASP.
NRT(R)	Used if the exchange coefficients are time-variable (approximated by a piecewise linear functions of time). NRT will contain the time at which the next break in the piecewise linear functions will occur, at which point it will be necessary to obtain new slopes (MR) and intercepts (BR).
NQT(R)	Used if the advective flows are time-variable (approximated by a piecewise linear functions of time). NQT will contain the time at which the next break in the piecewise linear functions will occur, at which point it will be necessary to obtain new slopes (MQ) and intercepts (BQ).
NBCT(R)	Used if the boundary conditions for a system are time-variable (approximated by a piecewise linear functions of time). NBCT(ISYS) will contain the time at which the next break in the piecewise linear functions for system ISYS, will occur, at which point it will be necessary to obtain new slopes (MBC) and intercepts (BBC) for system ISYS.
NWKT(R)	Used if the forcing functions for a system are time-variable (approximated by a piecewise linear function of time). NWKT(ISYS) will contain the time at which the next break in the piecewise linear functions, for system ISYS, will occur, at which point it will be necessary to obtain new slopes (MWK) and intercepts (BWK) for system ISYS.
NFUNT(R)	Used if time variable functions (approximated as piecewise linear functions of time) have been read for use in the WASPB kinetic subroutine. NFUNT will contain the time at which the next break in the piecewise linear functions will occur, at which point it will be necessary to obtain new slopes (MFUNC) and intercepts (BFUNC).
ITIMV(I)	Not used in current version of WASP.

ITIMR(I)	Used as a breakpoint counter for obtaining correct slope and intercept values for the time-variable exchange coefficients.
ITIMQ(I)	Used as a breakpoint counter for obtaining correct slope and intercept values for time-variable advective flows.
ITIMP(I)	Used as a breakpoint counter for obtaining correct slope and intercept values for the time-variable functions required by the WASPB kinetic subroutine.
ITIMB(I)	Used as a breakpoint counter for obtaining correct slope and intercept values for time-variable boundary conditions.
ITIMR(I)	Used as a breakpoint counter for obtaining correct slope and intercept values for the time-variable exchange coefficients.
ITIMQ(I)	Used as a breakpoint counter for obtaining correct slope and intercept values for time-variable advective flows.
ITIMP(I)	Used as a breakpoint counter for obtaining correct slope and intercept values for the time-variable functions required by the WASPB kinetic subroutine.
ITIMB(I)	Used as a breakpoint counter for obtaining correct slope and intercept values for time-variable boundary conditions.
ITIMW(I)	Used as a breakpoint counter for obtaining correct slope and intercept values for time-variable forcing functions.

APPENDIX 2:
TOXIWASP Subroutine Listings

```
C***********************************************************************
C
C
C                                   TOXIWASPD
C
C                                                      LAST REVISED 10/13/82
C***********************************************************************
C
      SUBROUTINE WASPB
C
C     THIS SUBROUTINE COMBINES CHEMICAL AND ENVIRONMENTAL PARAMETERS
C TO FIRST ORDER RATES, AND CALCULATES KINETIC DERIVATIVES.
C IT IS BASED ON THE SUBROUTINE FIRORD IN THE EXAMS MODEL BY DR. L.
C A.BURNS.  INCLUDED ARE HYDROLYSIS, BIOLYSIS, OXIDATION,PHOTOLYSIS 1,
C AND VOLATILIZATION.
C-----------------------------------------------------------------------
C     TOXIWASPD REDUCES THE KINETICS OF THE TOXICANT TO PSEUDO-FIRST-
C ORDER FORM BY COUPLING CHARACTERISTICS OF THE TOXICANT AND THE
C ENVIRONMENT.  IF THE INPUT DATA PERMITS, THE PROPERTIES OF THE
C TOXICANT ARE ADJUSTED TO REFLECT THE EFFECT OF TEMPERATURE IN EACH
C PHYSICAL ELEMENT OF THE SYSTEM.  THE PSEUDO-FIRST-ORDER REACTION RATE
C CONSTANTS ARE COMPUTED FROM THE INTERACTIVE EFFECTS OF PARTITIONING,
C TEMPERATURE, AND OTHER CHARACTERISTICS OF THE ENVIRONMENT FOR EACH
C SPECIES. FOR SIMPLICITY, ONLY THE NEUTRAL ION FORM IS CONSIDERED HERE.
C     TOXIWASPD CALLS THE FOLLOWING SUBROUTINES:
C             INIT (TOXINIT)
C             TOXIDU (TOXIDUMP)
C             FIRORD (TOXIFORD)
C               VOLAT (TOXIVOLT)
C               PHOTO1 (TOXIPHOT)
C               REOX (TOXIREOX)
C             SETTLE (TOXISETL)
C             SEDWAT (TOXISEDW)
C
C_____________________________________________________________________
C          SYSTEMS
C          -------
C             1  CHEMICAL, MG/L
C             2  SEDIMENT, MG/L
C
C-----------------------------------------------------------------------
```

```
C
C          CONSTANTS
C          ---------
C
C         HYDROLYSIS
C
C             1  EBHG(1,1)- ARRHENIUS ACTIVATION ENERGY FOR BASE HYDRO.
C             2  EBHG(2,1)
C             3  EBHG(3,1)
C             4  ENHG(1,1)- N DENOTES NEUTRAL HYDROLYSIS
C             5  ENHG(2,1)
C             6  ENHG(3,1)
C             7  EAHG(1,1)- A DENOTES ACID HYDROLYSIS
C             8  EAHG(2,1)
C             9  EAHG(3,1)
C            10  KAHG(1,1)- 2ND ORD. RATE CONST. FOR ACID HYD.
C            11  KAHG(2,1)
C            12  KAHG(3,1)
C            13  KBHG(1,1)- B DENOTES BASE HYDROLYSIS
C            14  KBHG(2,1)
C            15  KBHG(3,1)
C            16  KNHG(1,1)- N DENOTES NEUTRAL HYDROLYSIS
C            17  KNHG(2,1)
C            18  KNHG(3,1)
C
C         OXIDATION
C
C            19  EOXG(1,1)- ARHENIUS ACT. ENERGY OF OXI. TRANSFORMATION
C            20  EOXG(2,1)
C            21  EOXG(3,1)
C            22  KOXG(1,1)- 2ND ORD. RATE CONST. FOR OXI. TRANS.
C            23  KOXG(2,1)
C            24  KOXG(3,1)
C
C         BIOLYSIS
C
C            25  KBACWG(1,1)- 2ND ORD. RATE FOR BACT. BIOL. IN WATER
C            26  KBACWG(2,1)
C            27  KBACWG(3,1)
C            28  QTBAWG(1,1)- CHANGE IN KBACWG DUE TO TEMP CHANGE OF 10 C
C            29  QTBAWG(2,1)
C            30  QTBAWG(3,1)
C            31  KBACSG(1,1)- 2ND ORD. RATE FOR BACT. BIOL. IN SEDIMENT
C            32  KBACSG(2,1)
C            33  KBACSG(3,1)
C            34  QTBASG(1,1)- CHANGE IN KBACSG DUE TO TEMP CHANGE OF 10 C
C            35  QTBASG(2,1)
C            36  QTBASG(3,1)
C
C         PARTITIONING
C
```

```
C            37  KOC         PART. COEFF.-ORG. CARBON
C            38  KOW         PART. COEFF.-OCTANOL-WATER
C            39  OCB         ORG.CARBON FRACTION OF BIOMASS
C            40  (ALPHA(1)) FRACTION OF CHEMICAL DISSOLVED (CALCULATED)
C            41  (ALPHA(2)) FRACTION OF CHEMICAL SORBED TO SED (CALCULATED)
C            42  (ALPHA(3)) FRACTION OF CHEMICAL BIO-SORBED (CALCULATED)
C
C         VOLATILIZATION
C
C            43  MWTG        MOLECULAR WEIGHT OF TOXICANT
C            44  HENRYG      HENRY'S LAW OF THE TOXICANT
C            45  VAPRG       VAPOR PRESSURE OF THE TOXICANT      TORR
C            46  KVOG        CONST. EVAP. FOR LIQ. PHASE RESIS.
C            47  SOLG        AQUEOUS SOLUBILITY
C            48  ESOLG       SOLUBILITY EXPONENT
C            49  EVPRG       MOLAR HEAT OF VAPORIZATION
C            50  EHENG       CONSTANT TO COMPUTE HENRY'S LAW CONSTANT
C            51  (WIND)      LOCAL TIME-VARYING WIND (CALCULATED)
C            52  (KO2L)      LOCAL TIME-VARYING REAERATION VELOC (CALCULATED)
C            53
C
C         PHOTOLYSIS
C
C            54  KDPG        PHOTOLYTIC RATE CONSTANT(1/HOUR)
C            55  RFLATG      REF. LAT. FOR KDPG
C            56  CLOUDG      AVG CLOUD. IN TENTHS SKY COVER
C            57  LATG        GEOGRAPHIC LAT OF ECOSYSTEM
C            58  DFACG       OPTICAL PATH TO VERTICAL DEPTH
C            59  QUANTG1     REACTION QUANTUM YIELD IN PHOTO. TRANS.
C            60  QUANTG2
C            61  QUANTG3
C
C         SPECIAL PRINT AND CONTROL OPTIONS
C
C            62  XJTR        SEG FOR TRIGGERING EVENT PRINTS AND FREQ ANALYSIS
C            63  CTRIG       CONCETRATIONS DEFINING EVENTS
C            64  DTOPT       OPTION TO OPTIMIZE TIME STEP
C            65  TDINT       TIME BETWEEN NEW DECAY CALCULATIONS
C            66  LOPT        OPTION TO READ IN DAILY FLOWS AND/OR LOADS
C                             0 = SKIP DAILY READ OPTION
C                             1 = READ DAILY FLOWS AND/OR NPS LOADS
C
C         INTERNALLY SAVED CONSTANTS
C
C            67  BURY        LOCAL BURIAL / SCOUR RATE
C            68  KDPL        LOCALLY CALCULATED PHOT. RATE CONSTANT
C            69  KB          PARTITION COEFF FOR TARGET BIOMASS
C            70  TEMPN       TIME-VARYING NORMALIZED TEMPERATURE
C            71  TKEL        LOCAL TEMPERATURE, DEG K
C            72  PNEXT       COUNTER FOR NEXT EVENT PRINT CHECK
C            73  TCOUNT
```

```
C            74  TMARK
C            75  XJSTR      BENTHIC SEGMENT FOR EVENT PRINTS AND FREQ ANALYSI
C
C            76  PH          HYDROGEN ION ACTIVITY
C            77  POH         HYDROXYL ION ACTIVITY
C            78  LIGHTN       NORMALIZED LIGHT INTENSITY
C            79  INDEXW       INDEX=1. FOR WATER, =0. FOR BED SEGMENT
C            80  INDEXS       INDEX=0. FOR WATER, =1. FOR BED SEGMENT
C            81  BOTLIT       LIGHT AT BOTTOM OF SEGMENT
C            82  TIMCHK       CHECK FOR NEW DAY
C            83  MOQS         NUMBER OF DAILY FLOWS
C            84  NOWKS        NUMBER OF NPS LOADS
C            85  TMASS        CHEMICAL MASS BURIED
C
C I=1,2,3 INDICATES DISSOLVED FORM, SEDIMENT SORBED, BIO-SORBED
C-----------------------------------------------------------------------
C
C          PARAMETERS
C          ----------
C
C             1  TEMPM(J)     MAX SEG TEMP              DEG C
C             2  DEPTHG(J)    AVERAGE SEG DEPTH         FT
C             3  VELOC(J)     AVERAGE SEG CURRENT       FT/SEC
C             4  WINDG(J)     AVG WIND VEL. AT 10 CM      M/S
C             5  TYPEE(J)     SEG TYPE INDICATOR
C                              1  SURFACE WATER
C                              2  SUBSURFACE WATER
C                              3  TOP BENTHIC
C                              4  SUBSURFACE BENTHIC
C             6  BACTOG(J)    BACTERIAL POPULATION
C             7  ACBACG(J)    FRACTION OF BACT POP THAT IS ACTIVE
C             8  BIOMAS(J)    TARGET BIOMASS, MG/L (WATER) , G/SQ.M (BED)
C             9  BIOTMG(J)    BIOMASS INTERNAL TEMPERATURE, DEG C
C            10  POHG(J)      HYDROXYL ION ACTIVITY
C            11  OXRADG(J)    MOLAR CONCENTR. OF ENV. OXI.  N/L
C            12  OCS(J)       ORGANIC CARBON FRACTION OF SEDIMENT
C            13  PCTWA(J)     SEDIMENT FRESH WEIGHT TO DRY WEIGHT
C            14  DSPSED(J)    SEDIMENT TURNOVER DISPERSION RATIO
C            15  PHG(J)       HYDROGEN ION ACTIVITY
C            16  WS(J)        SETTLING, BURIAL, OR PERCOLATION RATES
C                              TYPEE=1 WS=SETTLING, M/DAY
C                              TYPEE=2 WS=SETTLING, M/DAY
C                              TYPEE=3 WS=SCOUR, CM/YEAR
C                              TYPEE=4 WS=PERCOLATION, CFS
C            17  CMPETG(J)    SINGLE VALUE ZENITH LIGHT EXTINC. COEFF.
C            18  TOTKG(J)     PRE-CALCULATED TOTAL DEG. RATE, 1/HR
C            19  DISPV(J)     INTERNALLY CALCULATED SED-WATER DISPERSION
C            20  NPSWK(J)     EXTERNALLY READ NPS LOADS
C            22  VVOL(J)      INTERNALLY SAVED VARIABLE VOLUME PARAMETERS
C                              (INCLUDES BVOLO(J),RVOL(J))
C            23  BMASS(J)     INTERNALLY SAVED PHYSICAL MASS LOSS, KG
```

```
C            14  VOLKG(J)   INTERNALLY SAVED VOLATILIZATION RATE CONST, /DAY
C
C-----------------------------------------------------------------------
C
C
C          TIME FUNCTIONS
C          --------------
C
C             1  TEMPN       NORMALIZED TEMPERATURE
C             2  WINDN       NORMALIZED WIND SPEED
C             3  PHN         NORMALIZED PH
C             4  POHN        NORMALIZED POH
C             5  LIGHTN      NORMALIZED LIGHT INTENSITY
C
C
C-----------------------------------------------------------------------
C
C-----------------------------------------------------------------------
C
      INCLUDE 'TOXICMN.COM'
C
      REAL KAHL,KNHL,KBHL,KOXL,KBACWL,KBACSL,MWTG
      REAL KAHG, KNHG,KBHG,KOXG,KBACWG,KBACSG,KO2G,KO2L,IL
      REAL INDEXW,INDEXS,KOC,KOW,KP,KB, KVOG,TKEL,JL
      REAL LATG,KDPG,KDPL,LIGHTN,LOPT,NPSWK(SY,WK),MOQS,NOWKS
C
      DIMENSION EBHG(3,1),ENHG(3,1),EAHG(3,1),QUANTG(3,1),
     .    KAHG(3,1),KBHG(3,1),KNHG(3,1),EOXG(3,1),KOXG(3,1),KBACWG(3,1),
     .    KBACSG(3,1),QTBAWG(3,1),QTBASG(3,1),TEMPM(SG),DEPTHG(SG),
     .    VELOC(SG),ALPHA(3),BIOTMG(SG),KO2G(SG),PHG(SG),WS(SG),
     .    OXRADG(SG),WINDG(SG),TYPEE(SG),TOTKG(SG),ACBACG(SG)
      DIMENSION POHG(SG),OCS(SG), BACTOG(SG),BIOMAS(SG),CMPETG(SG)
      DIMENSION DISPV(SG), KP(SG),PCTWA(SG),FRW(SG),DSPSED(SG)
      DIMENSION VVOL(SG),BVOLO(SG),RVOL(SG),BMASS(SG),VOLKG(SG)
C
C             CONSTANTS
C
C          HYDROLYSIS
      EQUIVALENCE (CONST(1),EBHG(1,1)),(CONST(2),
     .     EBHG(2,1)),(CONST(3),EBHG(3,1)),(CONST(4),ENHG(1,1)),
     .    (CONST(5),ENHG(2,1)),(CONST(6),ENHG(3,1)),(CONST(7),
     .     EAHG(1,1)),(CONST(8),EAHG(2,1)),(CONST(9),EAHG(3,1))
      EQUIVALENCE
     .     (CONST(10),KAHG(1,1)),(CONST(11),KAHG(2,1)),(CONST(12),
     .     KAHG(3,1)),(CONST(13),KBHG(1,1)),(CONST(14),KBHG(2,1)),
     .    (CONST(15),KBHG(3,1)),(CONST(16),KNHG(1,1)),
     .    (CONST(17),KNHG(2,1)),(CONST(18),KNHG(3,1))
C
C         OXIDATION
      EQUIVALENCE (CONST(19),EOXG(1,1)),
          (CONST(20),EOXG(2,1)),(CONST(21),EOXG(3,1)),(CONST(22),
```

```
     .    KOXG(1,1)),(CONST(23),KOXG(2,1)),(CONST(24),KOXG(3,1))
C
C         BIOLYSIS
      EQUIVALENCE
     .    (CONST(25),KBACWG(1,1)),(CONST(26),KBACWG(2,1)),(CONST(27),
     .    KBACWG(3,1)),(CONST(28),QTBAWG(1,1)),(CONST(29),QTBAWG(2,1)),
     .    (CONST(30),QTBAWG(3,1)),(CONST(31),KBACSG(1,1)),(CONST(32),
     .    KBACSG(2,1)),(CONST(33),KBACSG(3,1)),(CONST(34),QTBASG(1,1)),
     .    (CONST(35),QTBASG(2,1)),(CONST(36),QTBASG(3,1))
C
C          PARTITIONING
       EQUIVALENCE (CONST(37),KOC), (CONST(38),KOW),(CONST(39),OCB),
     .    (CONST(40),ALPHA(1)),(CONST(41),ALPHA(2)),(CONST(42),ALPHA(3))
C
C         VOLATILIZATION
      EQUIVALENCE
     .    (CONST(43),MWTG),(CONST(44),HENRYG),(CONST(45),VAPRG),
     .    (CONST(46),KVOG),(CONST(47),SOLG),(CONST(48),ESOLG),
     .    (CONST(49),EVPRG),(CONST(50),EHENG),(CONST(51),WIND),
     .    (CONST(52),KO2L),(CONST(53),DUMMY6)
C
C         PHOTOLYSIS
      EQUIVALENCE (CONST(54),KDPG),
     .    (CONST(55),RFLATG),(CONST(56),CLOUDG),(CONST(57),LATG),
     .    (CONST(58),DFACG),(CONST(59),QUANTG(1,1)),
     .    (CONST(60),QUANTG(2,1)),(CONST(61),QUANTG(3,1))
C
C         SPECIAL PRINT OPTIONS
      EQUIVALENCE (CONST(62),XJTR),(CONST(63),CTRIG),(CONST(64),DTOPT),
     .    (CONST(65),TDINT),(CONST(66),LOPT)
C
C         INTERNALLY SAVED CONSTANTS
      EQUIVALENCE (CONST(67),BURY),(CONST(68),KDPL),
     .    (CONST(69),KB),(CONST(70),TEMPN),(CONST(71),TKEL),
     .    (CONST(72),PNEXT),(CONST(73),TCOUNT),
     .    (CONST(74),TMARK),(CONST(75),XJSTR)
      EQUIVALENCE (CONST(76),PH),(CONST(77),POH),(CONST(78),LIGHTN),
     .    (CONST(79),INDEXW),(CONST(80),INDEXS),(CONST(81),BOTLIT),
     .    (CONST(82),TIMCHK),(CONST(83),MOQS),(CONST(84),NOWKS),
     .    (CONST(85),TMASS)
C
C             PARAMETERS
C
      EQUIVALENCE (PARAM(1,1),TEMPM(1)),(PARAM(1,2),DEPTHG(1)),
     .    (PARAM(1,3),VELOC(1)),(PARAM(1,4),WINDG(1)),(PARAM(1,5),
     .      TYPEE(1)),(PARAM(1,6),BACTOG(1)),(PARAM(1,7),ACBACG(1)),
     .     (PARAM(1,8),BIOMAS(1)),(PARAM(1,9),BIOTMG(1)),
     .     (PARAM(1,10),POHG(1)),(PARAM(1,11),OXRADG(1))
      EQUIVALENCE
     .     (PARAM(1,12),OCS(1)),(PARAM(1,13),PCTWA(1)),
     .     (PARAM(1,14),DSPSED(1)),(PARAM(1,15),PHG(1)),
```

```
     .     (PARAM(1,17),CMPETG(1)),(PARAM(1,16),WS(1)),
     .     (PARAM(1,18),TOTKG(1)),(PARAM(1,19),DISPV(1))
C
      EQUIVALENCE (PARAM(1,22),VVOL(1)),(VVOL(1),BVOLO(1)),
     .            (VVOL(1),RVOL(1))
      EQUIVALENCE (PARAM(1,14),VOLKG(1)),(PARAM(1,23),BMASS(1))
C
      EQUIVALENCE (PARAM(1,12),KP(1)),(PARAM(1,13),FRW(1))
C
      EQUIVALENCE (PARAM(1,20),NPSWK(1,1)),(PARAM(1,3),KO2G(1))
C
C-----------------------------------------------------------------------
C
C
C
C            PERFORM CALCULATIONS FIRST TIME STEP
C
      IF(INITB.EQ.0) CALL INIT
      JTR=XJTR
      JSTR=XJSTR
C
C            EVALUATE PIECEWISE LINEAR FUNCTIONS OF TIME
C
      IF(NFUNT.GT.TIME) GO TO 25
         CALL WASP8(MFUNC,BFUNC,NFUNC,4,ITIMF,NFUNT,73)
         ITIMF = ITIMF + 1
25    CONTINUE
      TEMPN = MFUNC(1) * (TIME-NFUNT) + BFUNC(1)
      WINDN = MFUNC(2) * (TIME-NFUNT) + BFUNC(2)
      PHN   = MFUNC(3) * (TIME-NFUNT) + BFUNC(3)
      POHN = MFUNC(4) * (TIME-NFUNT) + BFUNC(4)
      LIGHTN = MFUNC(5) * (TIME-NFUNT) + BFUNC(5)
C
C            CHECK FOR PRINT INTERVAL
C
      IF(IDISK.NE.0) CALL TOXIDU(J,3,V1,V2,V3,V4,V5,V6,V7,V8)
C
      IF(TIME.LT.TMARK) GO TO 30
        TMARK=TMARK+TDINT
        DO 27 J=1,NOSEG
          IF(TOTKG(J).LT.0.) TOTKG(J)=0.0
27      CONTINUE
C
30    CONTINUE
C
C            COMPUTE CURRENT SEGMENT CONDITIONS
C
      DO 500 J=1,NOSEG
        IF(C(1,J).LT.1.E-37) C(1,J) = 0.
        CHEM=C(1,J)
        SED=C(2,J)
```

```
      VOL=BVOL(J)
      DEPTH=DEPTHG(J)
      DEPTHM=DEPTH/3.281
      TCELG=TEMPN*TEMPM(J)
      TKEL=TCELG+273.15
      PH=PHN*PHG(J)
      POH=PHN*POHG(J)
      WIND=WINDN*WINDG(J)
      INDEXS=0.
      INDEXW=1.
      IF(TYPEE(J).LE.2.) GO TO 51
        INDEXS=1.
        INDEXW=0.
51    CONTINUE
      SEDFAC = KP(J) * SED * 1.E-06/FRW(J)
      BIOFAC= KB*BIOMAS(J)*1.E-06/FRW(J)
      DENOM=  1.0 +SEDFAC +BIOFAC
      ALPHA(1)= 1.0/DENOM
      ALPHA(2)= SEDFAC/DENOM
      ALPHA(3)= BIOFAC/DENOM
      CHEM1 = CHEM*ALPHA(1)
C
C           CHECK SOLUBILITY LIMIT FOR DISS CHEM
C
      IF(CHEM1.LT.CMAX(9)) GO TO 60
        TEND = TIME
        WRITE(6,59) CHEM1,CMAX(9),J
59      FORMAT(1HO/////15X,'DISSOLVED CHEMICAL CONCENTRATION OF',
     .  E10.3,' EXCEEDS LIMIT OF',E10.3,' IN SEGMENT',I3//
     .  5X,'THIS LIMIT WAS SET TO ASSURE FIRST ORDER KINETICS. TO',
     .  ' BYPASS THIS CHECK, CHANGE CMAX(1) FROM 0.0 TO A LARGE',
     .  ' NUMBER.'/////25X,'THIS SIMULATION IS ABORTED!')
60    CONTINUE
C
C           CALCULATE CURRENT SEGMENT DEGRADATION RATES
C
      TOTKL = TOTKG(J) * 24.
      IF(TOTKL.EQ.0.) CALL FIRORD(J,TOTKL,PHOTKL,HYDRKL,BIOLKL,
     .   OXIDKL,VOLKL)
      IF(TOTKL.LT.0.) TOTKL=-TOTKL
C
      CD(1,J) = -TOTKL * CHEM * VOL
C
C           ADJUST  DERIVATIVES FOR SETTLING, EROSION/BURIAL, AND PERCOLATION
C
      CALL SETTLE(J,SETINS,SETOUS,SETINC,SETOUC)
C
C           CALCULATE PORE WATER MIXING, INCLUDING SEDIMENT WATER EXCHANGE
C
      IF(TYPEE(J).GE.3.)CALL SEDWAT(J,ALPH1M,ALPH2M)
```

```
        ALPH1M= ALPHA(1)
        ALPH2M= ALPHA(2)
C
C            SAVE CHEMICAL MASS VOLATILIZED FROM WATER
C
        IF(TYPEE(J).EQ.1.) BMASS(J)=BMASS(J)+VOLKG(J)*CHEM*VOL*DT*28.317
C
C            PRINT VARIABLES AND DECAY RATES
C
        IF(IDISK.NE.0) CALL TOXIDU(J,1,CHEM,SED,TOTKL,PHOTKL,HYDRKL,
                                   BIOLKL,OXIDKL,VOLKL)
C
C            SAVE CONCENTRATIONS FOR STAT FILES
C
        IF (J.NE.JTR) GO TO 80
            CTW= CHEM
            C1W= ALPHA(1)*CHEM
            CSW= 1.E06*ALPHA(2)*CHEM/SED
            CBW= 1.E06*ALPHA(3)*CHEM/BIOMAS(J)
            GO TO 85
 80     CONTINUE
        IF (J.NE.JSTR) GO TO 85
            CTB= CHEM
            C1B= ALPHA(1)*CHEM
            CSB= 1.E06*ALPHA(2)*CHEM/SED
            CBB= 1.E06*ALPHA(3)*CHEM/BIOMAS(J)
 85     CONTINUE
500   CONTINUE
      IDISK = 0
C
C            EVENT TRIGGERED  PRINTOUT
C
      IF (JTR.NE.0) CALL TOXIDU(J,2,CTW,C1W,CSW,CBW,CTB,C1B,CSB,CBB)
C
C            READ AND ADD DAILY FLOWS AND NPS LOADS FROM AUXILIARY FILE
C
      IF(LOPT.EQ.0) GO TO 600
C            CHECK FOR NEW DAY
        ICHK=TIMCHK
        ITIMEC=TIME
        ITCHK=ITIMEC-ICHK
        IF(ITCHK.LE.0) GO TO 700
          TIMCHK = TIME
          NWKS = NOWKS
          DO 540 J=1,NWKS
            DO 530 I=1,NOSYS
              BWK(I,J)=BWK(I,J)-NPSWK(I,J)
530         CONTINUE
540       CONTINUE
          IF(NOWKS.GT.0.) READ(91) ((NPSWK(I,J),I=1,NOSYS),J=1,NWKS)
          IF(MOQS.GT.0.) READ(91) (BQ(K),K=1,NOQ)
```

```
          DO 560 J=1,NWKS
            DO 550 I=1,NOSYS
              BWK(I,J)=BWK(I,J)+NPSWK(I,J)
550         CONTINUE
560       CONTINUE
600   CONTINUE
C
C            OPTIMIZE TIME STEP
C
      IF(DTOPT.EQ.0.) GO TO 700
        DELT=0.5
C            CHECK FLOWS
        DO 650 K=1,NOQ
          I=IQ(K)
          J=JQ(K)
          IF(I.EQ.0) I=J
          IF(J.EQ.0) J=I
          TQ=BQ(K) + MQ(K)*(TIME-NQT)
          IF(TQ.EQ.0.) GO TO 650
            TRT=0.5*(BVOL(I)+BVOL(J))/TQ
            IF(TRT.LT.DELT) DELT=TRT
650     CONTINUE
C            CHECK DISPERSIVE EXCHANGES
        DO 660 K=1,NOR
          I=IR(K)
          J=JR(K)
          IF(I.EQ.0) I=J
          IF(J.EQ.0) J=I
          TQ=BR(K) + MR(K)*(TIME-NQT)
          IF(TQ.EQ.0.) GO TO 660
            TRT=0.5*(BVOL(I)+BVOL(J))/TQ
            IF(TRT.LT.DELT) DELT=TRT
660     CONTINUE
        IF(DELT.LT.0.01) DELT=0.01
        DT=DELT
700   CONTINUE
C
C
      INITB=3
      RETURN
      END
C
C*****************************************************************************
```

```
C
C
C                              TOXICMN
C
C
C
C*************************************************************
C
C
C     PDP 11/70 VERSION OF WASP
C
C        THIS VERSION OF WASP IS CONFIGURED FOR A MAXIMUM OF
C        2 SYSTEMS AND 50 SEGMENTS
C
C
C*************************************************************
C
C      THE FOLLOWING PARAMETER STATEMENTS ESTABLISH PARAMETERS
C      FOR SYSTEMS AND SEGMENT CHANGES.  CHANGES HERE WILL
C      BE EVIDENT IN ALL PARTS OF THE PROGRAM WHERE THESE PARA-
C      METERS ARE USED.
C
C      SY = NUMBER OF SYSTEMS.
      PARAMETER SY=2
C
C      SG = NUMBER OF SEGMENTS.
      PARAMETER SG=50
C
C      S2 IS ALWAYS SET TO 2 * SG IE. SG=50, S2=100
      PARAMETER S2=100
C
C      BC = MAX. NO. OF BOUNDARY CONCENTRATIONS PER SYSTEM
      PARAMETER BC=30
C
C      WK = MAX. NO. OF FORCING FUNCTIONS PER SYSTEM (WTH'S)
      PARAMETER WK=30
C
C + + + + + + + + PARAMETER SUBSTITUTIONS FOLLOW + + + + + + + +
C
      REAL    NVOLT,NRT,NQT,NBCT(SY),NWKT(SY),NFUNT
      REAL    MVOL(SG),MR(S2),MQ(S2),MBC(SY,BC),MWK(SY,WK),MFUNC(10)
      INTEGER   OUT,SYSBY(SY),RBY(SY),QBY(SY)
      COMMON    IN,ICRD,OUT,NOSYS,NOSEG,ISYS,ISEG,ISIM,LISTG,LISTC
      COMMON    INITB,IPRNT,IDUMP(8,2),IDISK,IREC,MXDMP,IDFRC(SY)
      COMMON    NBCPSY,NWKPSY,SYSBY,RBY,QBY,NEGSLN
      COMMON    TIME,DT,TZERO,SCALT,TEND,PRNT
      COMMON    OMEGA,ITCHCK,MXITER
      COMMON    C(SY,SG),CD(SY,SG),CMAX(10),CMIN(SY)
      COMMON    PARAM(SG,23),CONST(85)
      COMMON    BVOL(SG),BR(S2),BQ(S2),BBC(SY,BC),BWK(SY,WK),BFUNC(10)
```

```
      COMMON   MVOL,MR,MQ,MBC,MWK,MFUNC
      COMMON   IR(S2),JR(S2),IQ(S2),JQ(S2),IBC(SY,BC),IWK(SY,WK)
      COMMON   IVOPT,NOV,IROPT,NOR,IQOPT,NOQ,IBCOP(SY),NOBC(SY)
      COMMON   IWKOP(SY),NOWK(SY),NOPAM,NCONS,NFUNC
      COMMON   NVOLT,NRT,NQT,NBCT,NWKT,NFUNT
      COMMON   ITIMV,ITIMR,ITIMQ,ITIMF,ITIMB(SY),ITIMW(SY)
      COMMON   /PDP/ MXSYS,MXSEG
C
C*************************************************************************
C*************************************************************************
C
C                              TOXINIT
C
C                                                        LAST REVISED 03/10/83
C*************************************************************************
C
      SUBROUTINE INIT
C
      INCLUDE 'TOXICMN.COM'
C
      DIMENSION OCS(SG),KP(SG),TYPEE(SG),PCTWA(SG),FRW(SG),
     .          BIOMAS(SG),DEPTHG(SG),TOTKG(SG),BACTOG(SG),
     .          ACBACG(SG),QT(10),VELOC(SG)
      DIMENSION VVOL(SG),BVOLO(SG),RVOL(SG)
C
      REAL KP,KOC,KOW,KB,LOPT,NPSWK(SY,WK),MOQS,NOWKS,MWTG
C
      EQUIVALENCE (CONST(37),KOC),(CONST(38),KOW),(CONST(39),OCB),
     .     (CONST(62),XJTR),(CONST(63),CTRIG),(CONST(69),KB),
     .     (CONST(73),TCOUNT),(CONST(74),TMARK),(CONST(75),XJSTR),
     .     (CONST(66),LOPT),(CONST(81),BOTLIT),(CONST(82),TIMCHK),
     .     (CONST(83),MOQS),(CONST(84),NOWKS),(CONST(65),TDINT),
     .     (CONST(43),MWTG),(CONST(47),SOLG)
      EQUIVALENCE (CONST(53),DUMMY6)
C
      EQUIVALENCE (PARAM(1,2),DEPTHG(1)),(PARAM(1,5),TYPEE(1)),
     .     (PARAM(1,8),BIOMAS(1)),(PARAM(1,12),OCS(1)),
     .     (PARAM(1,13),PCTWA(1)),(PARAM(1,18),TOTKG(1)),
     .     (PARAM(1,6),BACTOG(1)),(PARAM(1,7),ACBACG(1)),
     .     (PARAM(1,3),VELOC(1))
C
      EQUIVALENCE (PARAM(1,22),VVOL(1)),(VVOL(1),BVOLO(1)),
     .     (VVOL(1),RVOL(1))
C
      EQUIVALENCE (PARAM(1,12),KP(1)),(PARAM(1,13),FRW(1))
C
      EQUIVALENCE (PARAM(1,20),NPSWK(1,1))
C
      INITB=1
```

```
      MXDMP=8
      REWIND 2
      TCOUNT=0.
      TMARK=0.
      IF(TDINT.EQ.0.0) TDINT=1.E06
C
C
C       SET UP FOR READING OF NEW FLOWS AND LOADINGS
C
      TIMCHK = -30000.
      IF(LOPT.EQ.0.) GO TO 100
        OPEN(UNIT=91,NAME='DAILY.DAT',TYPE='OLD',
                     FORM='UNFORMATTED',ACCESS='SEQUENTIAL')
        TIMCHK = TIME
C
C       READ UNIT 91 FOR CONTENT
        READ(91) NWKS,MQOPT,MOQ,SCALQ
        NOWKS=FLOAT(NWKS)
        MOQS=FLOAT(MOQ)
        IF(MOQ.EQ.0) GO TO 20
C
C       READ UNIT 91 FOR FLOWS
          IQOPT=1
          WRITE(6,2001) SCALQ
2001      FORMAT(1H1/38X,'DAILY FLOWS READ FROM AUXILIARY FILE',
     .     ' "DAILY.DAT" '/35X,'FLOWS WILL BE MULTIPLIED BY ',E10.4,
     .     ' TO CONVERT TO CFS'/51X,'UPSTREAM FLOWS FOLLOW :'//
     .     1X,10(' DAY   FLOW  ')/1X,10(' ___ _______ ')//)
          READ(91) ((JQ(K),IQ(K)),K=1,MOQ)
          JROW=0
5         CONTINUE
            JROW=JROW+1
            DO 10 ICOL=1,10
              IF(NOWKS.GT.0.) READ(91,END=15)
               ((NPSWK(I,J),I=1,NOSYS),J=1,NWKS)
              READ(91) (BQ(K),K=1,MOQ)
              QT(ICOL)=BQ(1)/(SCALQ*0.0846)
              DO 8 K=1,MOQ
                MQ(K)=0.0
8             CONTINUE
10          CONTINUE
            WRITE(6,2003) (((JROW-1)*10+ICOL),QT(ICOL),ICOL=1,10)
2003        FORMAT(1H ,10(I4,F8.1,1X))
          GO TO 5
15          CONTINUE
            NCOL=ICOL-1
            IF(NCOL.LE.0) GO TO 18
            WRITE(6,2003) (((JROW-1)*10+ICOL),QT(ICOL),ICOL=1,NCOL)
18        CONTINUE
          REWIND 91
          READ(91) NWKS,MQOPT,MOQ,SCALQ
```

```
          READ(91) ((JQ(K),IQ(K)),K=1,MOQ)
          WRITE(6,2004) ((K,JQ(K),IQ(K)),K=1,MOQ)
2004      FORMAT(1H0//55X,'FLOW PAIRS FOLLOW :'//10X,10(10(3I3,3X)/))
20      CONTINUE
        IF(NWKS.EQ.0) GO TO 30
C
C       READ UNIT 91 FOR NPS LOADS
        WRITE(6,1001) (IWK(1,I),I=1,5)
1001    FORMAT(1H1/35X,'DAILY LOADS (LB/DAY) READ FROM AUXILIARY',
     .    ' FILE "DAILY.DAT"'/40X,'NONZERO LOADS FOR THE',
     .    ' FIRST FIVE SEGMENTS FOLLOW:'//
     .    6X,5(3X,5(1H*),' SEGMENT',I3,1X,5(1H*))/
     .    1X,'DAY',2X,5(4X,'CHEMICAL    SEDIMENT ')/
     .    1X,'___',2X,5(3X,10(1H_),2X,10(1H_))/)
        DO 25 KT=1,1000
          READ(91,END=30) ((NPSWK(I,J),I=1,NOSYS),J=1,NWKS)
          IF(MOQS.GT.0.) READ(91) (BQ(K),K=1,MOQ)
          X=NPSWK(1,1)+NPSWK(1,2)
          IF(X.EQ.0.) GO TO 25
            WRITE(6,1002) KT,((NPSWK(I,J),I=1,2),J=1,5)
1002        FORMAT(1X,I3,2X,5(3X,E10.4,2X,E10.4))
25      CONTINUE
30      CONTINUE
C
C       REPOSITION UNIT 91
        REWIND 91
        READ(91) NWKS,MQOPT,MOQ,SCALQ
        IF(MOQ.EQ.0) GO TO 35
          READ(91) ((JQ(K),IQ(K)),K=1,MOQ)
35      CONTINUE
        DO 50 J=1,NWKS
          DO 40 I=1,NOSYS
            NPSWK(I,J)=0.0
40        CONTINUE
50      CONTINUE
100   CONTINUE
C
C       DETERMINE SED. PRINT SEGMENT
C
      DO 205 I=1,10
       JSTR=XJTR+I
       IF(TYPEE(JSTR).EQ.3.)GO TO 206
205   CONTINUE
206   CONTINUE
      XJSTR=JSTR
      IF(XJTR.EQ.0)XJSTR=0.
C
C         CALCULATE EFFECTIVE PARTITION COEFF.(LOG KOC+.09+.91*LOG KOW)
C
      IF(KOC.EQ.0.0)KOC=KOW* 0.41
      IF(KOW.EQ.0.0)KOW=KOC/0.41
```

```
      DO 207 J=1,NOSEG
        KP(J) = KOC*OCS(J)
207   CONTINUE
      KB=OCB*KOW
      XTST=XJTR*CTRIG
      IF(XTST.NE.0.)WRITE(6,3073)CTRIG,XJTR
3073  FORMAT(1H1,20X,'EVENT TRIGGERED PRINTOUT...CHEM EXCEEDS',
             F7.3,2X,'IN SEGMENT',F4.0//13X,'TIME',7(4X,'SEG   CONC'))
C
C          IF THE SEGMENT IS BENTHIC, THE UNITS OF BIOMASS MUST BE
C       CONVERTED FROM G/SQ.M TO MG/L, AND FRW MUST BE CALCULATED.
C       FRW IS THE FRACTION WATER VOLUME TO TOTAL SEGMENT VOLUME.
C
       DO 309 J=1,NOSEG
         IF(BIOMAS(J).EQ.0.) BIOMAS(J)=1.E-06
         IF(TYPEE(J).LE.2.) GO TO 308
           FRW(J)=1.E-06*(PCTWA(J)-1.)*C(2,J)
           BIOMAS(J)=BIOMAS(J)/(DEPTHG(J)*3.281)
           GO TO 309
308      CONTINUE
           FRW(J) = 1.0
309    CONTINUE
C
C          COMPUTE ACTIVE BACTERIAL POPULATION FOR BIOLYSIS. IF THE
C       SEGMENT IS BENTHIC, CONVERT INPUT UNITS FROM 'CELLS/100 GRAMS
C       DRY WEIGHT SEDIMENT' TO 'ACTIVE CELLS/ML PORE WATER' :
C       SED(MG/ML) = (1/1000)*SED(MG/L)/FRW(J).
C
       DO 320 J=1,NOSEG
         BACTOG(J) = BACTOG(J)*ACBACG(J)
         IF(TYPEE(J).GE.3.) BACTOG(J)=BACTOG(J)*C(2,J)/
                                    (FRW(J)*100.*1000.*1000.)
320    CONTINUE
C
C            SET INITIAL AND REFERENCE VOLUMES FOR TOP BED SEGMENTS
C
       DO 330 J=1,NOSEG
         IF(TYPEE(J).NE.3.) GO TO 330
           M = J-1
           N = J+1
           BVOL0(J) = BVOL(J)
           FAC = DUMMY6
           RVOL(M) = BVOL(J) + FAC*BVOL(N)*C(2,N)/C(2,J)
C          (RVOL FOR SEG "J" IS STORED IN LOC "M")
           IF(TYPEE(N).NE.4.) RVOL(M)=1.E+10
330    CONTINUE
C
C            ZERO SLOPES FOR FLOWS AND EXCHANGES
C
       DO 350 K=1,NOQ
         MQ(K)=0.0
```

```
350     CONTINUE
        DO 360 K=1,NOR
          MR(K)=0.0
360     CONTINUE
C
C            SET CMAX TO ASSURE FIRST ORDER
C
        CMAX(9) = 1.E+10
        IF(CMAX(1).GT.0.) GO TO 400
          CMAX(9) = 1.E-05 * MWTG * 1000.
          CMAX(10)= 0.5 * SOLG
          IF(CMAX(10).LT.CMAX(9)) CMAX(9)=CMAX(10)
          CMAX(1) = CMAX(9) * 1000.
          WRITE(6,399) CMAX(9)
399       FORMAT(1H1/////10X,'WARNING : CMAX FOR DISSOLVED CHEMICAL',
     .     ' HAS BEEN SET TO',E10.3,' TO ASSURE FIRST ORDER DECAY',
     .     ' ASSUMPTION'//)
400     CONTINUE
C
C          CHECK FOR PROPER SEGMENT ALLIGNMENT.
C
        M=0
        J=1
        NBED=0
        ITYPE=TYPEE(J)
        MTYPE=0
        IF(ITYPE.NE.1) GO TO 500
        DO 450 J=2,NOSEG
          M=J-1
          ITYPE=TYPEE(J)
          MTYPE=TYPEE(M)
          GO TO (410,420,430,440),ITYPE
410         CONTINUE
              IF(MTYPE.LT.3) NBED=NBED+1
              GO TO 450
420         CONTINUE
              IF(MTYPE.GT.2) GO TO 500
              GO TO 450
430         CONTINUE
              IF(MTYPE.GE.3) GO TO 500
              GO TO 450
440         CONTINUE
              IF(MTYPE.LE.2) GO TO 500
450     CONTINUE
              IF(NBED.GT.0)WRITE(6,459)NBED
459       FORMAT(1H,5X,'WARNING:',I3,'WATER',
           'SEGMENTS LACK BENTHIC SEGMENTS')
        RETURN
500     CONTINUE
          WRITE(6,2005) M,MTYPE,J,ITYPE
2005      FORMAT(1H0////40X,'SEGMENT ALLIGNMENT PROBLEM:'/40X,'SEGMENT',
```

```
     .         I3,' IS TYPE',I3,' WHILE SEGMENT',I3,' IS TYPE',I3/
     .         40X,'EXECUTION DISCONTINUED')
       STOP
       END
C*******************************************************************************
C*******************************************************************************
C
C                                TOXIDUMP
C
C                                                        LAST REVISED 03/02/83
C*******************************************************************************
C
      SUBROUTINE TOXIDU(J,IOPT,V1,V2,V3,V4,V5,V6,V7,V8)
C
      INCLUDE 'WSPCMN.F4P'
C
      DIMENSION ALPHA(3), BIOMAS(SG),FRW(SG),DEPTHG(SG)
      DIMENSION BMASS(SG)
C
      EQUIVALENCE(CONST(72),PNEXT),(CONST(73),TCOUNT),
     .            (CONST(62),XJTR),(CONST(75),XJSTR),(CONST(63),CTRIG),
     .            (CONST(64),TPO),(CONST(65),TDINT),(CONST(40),ALPHA(1))
C
      EQUIVALENCE (PARAM(1,8),BIOMAS(1)),(PARAM(1,13),FRW(1)),
     .            (PARAM(1,2),DEPTHG(1))
C
      EQUIVALENCE (PARAM(1,23),BMASS(1))
C
C
      GO TO (100,200,50),IOPT
C
50    CONTINUE
C
C          SET UP DUMPS
C
         PTIME = TIME + .0001*TIME
C
C                COMPUTE RECORD ADDRESS COUNTERS
         IDFRC(1) = MXSEG * (IREC - 1) + 1
         IDFRC(2) = IDFRC(1)
C
C                CALL DISK BUFFER OPEN / CLOSE SUBROUTINE
         CALL FILEOC(10)
         WRITE(10'IREC) PTIME
       RETURN
C
  100   CONTINUE
  C
  C          DUMP VARIABLES TO FILE
```

```
C
          VOL =BVOL(J)
          CHEM=V1
          SED=V2
          TOTKL=V3
          PHOTKL=V4
          HYDRKL=V5
          BIOLKL=V6
          OXIDKL=V7
          VOLKL=V8
          CHEM1= ALPHA(1)*CHEM
          CHEM2= ALPHA(2)*CHEM
          CHEM3= ALPHA(3)*CHEM
          CHEMW= CHEM1/FRW(J)
          CHEMS= 1.E+06 * CHEM2/SED
          CHEMB= 1.E+06 * CHEM3/BIOMAS(J)
          XMASS= CHEM*VOL*28.317
          CALL FILEOC(11)
          WRITE(11'IDFRC(1))CHEM,CHEMW,CHEMS,CHEMB,
     .                      ALPHA(1),ALPHA(2),XMASS,BMASS(J)
          CALL FILEOC(12)
          WRITE(12'IDFRC(2))SED,DEPTHG(J),TOTKL,PHOTKL,
     .                      HYDRKL,BIOLKL,OXIDKL,VOLKL
          DO 77 J = 1, NOSEG
             IF(TOTKG(J).LT.0.)TOTKG(J) = 0.0
77        CONTINUE
      RETURN
C
200   CONTINUE
C
C           EVENT-TRIGGERED PRINTOUT
C
         CTW=V1
         C1W=V2
         CSW=V3
         CBW=V4
         CTB=V5
         C1B=V6
         CSB=V7
         CBB=V8
         PNEXT = PNEXT - DT*24.
         IF (PNEXT.GT.0.) RETURN
           PNEXT=3.
C
C        DUMP VARIABLES TO STAT FILES
C
           TCOUNT = TCOUNT + 1.0
           ICOUNT = TCOUNT
           JTR=XJTR
           JSTR=XJSTR
           WRITE(2)TZERO,TIME,ICOUNT,JTR,JSTR
```

```
          WRITE(2)ICOUNT,TIME,CTW,C1W,CSW,CBW
          WRITE(2)ICOUNT,TIME,CTB,C1B,CSB,CBB
          XTST=XJTR*CTRIG
          IF(XTST.EQ.0.) RETURN
            IF(INITB.EQ.1) WRITE(6,473) CTRIG,XJTR
473         FORMAT(1H1,20X,'EVENT TRIGGERED PRINTOUT...CHEM EXCEEDS',
     .        F7.3,2X,'IN SEGMENT',F4.0//13X,'TIME',7(4X,'SEG   CONC'))
            IF(C(1,JTR).GE.CTRIG) WRITE(6,470)TIME,(I,C(1,I),I=1,NOSEG)
470         FORMAT(1H0,9X,F10.3,7(I5,E10.3),15(/20X,7(I5,E10.3)))
          RETURN
      END
C
C***********************************************************************
```

```
C***********************************************************************
C
C
C                                TOXIFORD
C
C                                                    LAST REVISED 09/24/82
C***********************************************************************
C
C
      SUBROUTINE FIRORD(J,TOTKL,PHOTKL,HYDRKL,BIOLKL,OXIDKL,VOLKL)
C
C
C
C-----------------------------------------------------------------
C
      REAL KAHL,KNHL,KBHL,KOXL,KBACWL,KBACSL,MWTG
      REAL KAHG, KNHG,KBHG,KOXG,KBACWG,KBACSG,KO2G,KO2L,K20
      REAL INDEXW,INDEXS,KOC,KOW,KP,KB, KVOG,TKEL,JL,IL
      REAL LATG,KDPG,KDPL,LIGHTN,LOPT
C
      INCLUDE 'WSPCMN.F4P'
C
      DIMENSION EBHG(3,1),ENHG(3,1),EAHG(3,1),QUANTG(3,1),
     .    KAHG(3,1),KBHG(3,1),KNHG(3,1),EOXG(3,1),KOXG(3,1),KBACWG(3,1),
     .    KBACSG(3,1),QTBAWG(3,1),QTBASG(3,1),TEMPM(SG),DEPTHG(SG),
     .    VELOC(SG),ALPHA(3),BIOTMG(SG),KO2G(SG),PHG(SG),WS(SG),
     .    OXRADG(SG),WINDG(SG),TYPEE(SG),TOTKG(SG),ACBACG(SG)
      DIMENSION OCS(SG), BACTOG(SG),BIOMAS(SG),POHG(SG),CMPETG(SG)
      DIMENSION DISPV(SG), KP(SG),PCTWA(SG),FRW(SG),DSPSED(SG)
      DIMENSION VOLKG(SG)
C
C            CONSTANTS
C
C          HYDROLYSIS
      EQUIVALENCE (CONST(1),EBHG(1,1)),(CONST(2),
```

```
     .     EBHG(2,1)),(CONST(3),EBHG(3,1)),(CONST(4),ENHG(1,1)),
     .    (CONST(5),ENHG(2,1)),(CONST(6),ENHG(3,1)),(CONST(7),
     .     EAHG(1,1)),(CONST(8),EAHG(2,1)),(CONST(9),EAHG(3,1))
      EQUIVALENCE
     .     (CONST(10),KAHG(1,1)),(CONST(11),KAHG(2,1)),(CONST(12),
     .     KAHG(3,1)),(CONST(13),KBHG(1,1)),(CONST(14),KBHG(2,1)),
     .    (CONST(15),KBHG(3,1)),(CONST(16),KNHG(1,1)),
     .    (CONST(17),KNHG(2,1)),(CONST(18),KNHG(3,1))
C
C         OXIDATION
      EQUIVALENCE (CONST(19),EOXG(1,1)),
     .    (CONST(20),EOXG(2,1)),(CONST(21),EOXG(3,1)),(CONST(22),
     .    KOXG(1,1)),(CONST(23),KOXG(2,1)),(CONST(24),KOXG(3,1))
C
C         BIOLYSIS
      EQUIVALENCE
     .    (CONST(25),KBACWG(1,1)),(CONST(26),KBACWG(2,1)),(CONST(27),
     .    KBACWG(3,1)),(CONST(28),QTBAWG(1,1)),(CONST(29),QTBAWG(2,1)),
     .    (CONST(30),QTBAWG(3,1)),(CONST(31),KBACSG(1,1)),(CONST(32),
     .    KBACSG(2,1)),(CONST(33),KBACSG(3,1)),(CONST(34),QTBASG(1,1)),
     .    (CONST(35),QTBASG(2,1)),(CONST(36),QTBASG(3,1))
C
C          PARTITIONING
       EQUIVALENCE (CONST(37),KOC), (CONST(38),KOW),(CONST(39),OCB),
     .    (CONST(40),ALPHA(1)),(CONST(41),ALPHA(2)),(CONST(42),ALPHA(3))
C
C         VOLATILIZATION
      EQUIVALENCE
     .    (CONST(43),MWTG),(CONST(44),HENRYG),(CONST(45),VAPRG),
     .    (CONST(46),KVOG),(CONST(47),SOLG),(CONST(48),ESOLG),
     .    (CONST(49),EVPRG),(CONST(50),EHENG),(CONST(51),WIND),
     .    (CONST(52),KO2L),(CONST(53),DUMMY6)
C
C         PHOTOLYSIS
      EQUIVALENCE (CONST(54),KDPG),
     .    (CONST(55),RFLATG),(CONST(56),CLOUDG),(CONST(57),LATG),
     .    (CONST(58),DFACG),(CONST(59),QUANTG(1,1)),
     .    (CONST(60),QUANTG(2,1)),(CONST(61),QUANTG(3,1))
C
C         SPECIAL PRINT OPTIONS
      EQUIVALENCE (CONST(62),XJTR),(CONST(63),CTRIG),(CONST(64),DTOPT),
     .    (CONST(65),TDINT)
C
C         INTERNALLY SAVED CONSTANTS
      EQUIVALENCE (CONST(66),LOPT),(CONST(67),BURY),(CONST(68),KDPL),
     .    (CONST(69),KB),(CONST(70),TEMPN),(CONST(71),TKEL),
     .    (CONST(72),PNEXT),(CONST(73),TCOUNT),
     .    (CONST(74),TMARK),(CONST(75),XJSTR)
      EQUIVALENCE (CONST(76),PH),(CONST(77),POH),(CONST(78),LIGHTN),
     .    (CONST(79),INDEXW),(CONST(80),INDEXS),(CONST(81),BOTLIT),
     .    (CONST(82),TIMCHK)
```

```
C
C             PARAMETERS
C
      EQUIVALENCE (PARAM(1,1),TEMPM(1)),(PARAM(1,2),DEPTHG(1)),
     .    (PARAM(1,3),VELOC(1)),(PARAM(1,4),WINDG(1)),(PARAM(1,5),
     .      TYPEE(1)),(PARAM(1,6),BACTOG(1)),(PARAM(1,7),ACBACG(1)),
     .     (PARAM(1,8),BIOMAS(1)),(PARAM(1,9),BIOTMG(1)),
     .     (PARAM(1,10),POHG(1)),(PARAM(1,11),OXRADG(1))
      EQUIVALENCE
     .     (PARAM(1,12),OCS(1)),(PARAM(1,13),PCTWA(1)),
     .     (PARAM(1,14),DSPSED(1)),(PARAM(1,15),PHG(1)),
     .     (PARAM(1,17),CMPETG(1)),(PARAM(1,16),WS(1)),
     .     (PARAM(1,18),TOTKG(1)),(PARAM(1,19),DISPV(1))
C
      EQUIVALENCE (PARAM(1,12),KP(1)),(PARAM(1,13),FRW(1))
     .           ,(PARAM(1,3),KO2G(1))
C
      EQUIVALENCE (PARAM(1,14),VOLKG(1))
C
C
C-----------------------------------------------------------------
C
C          ZERO OUT PROCESS RATE CONSTANTS:
C
        HYDRKL=0.
        OXIDKL=0.
        BIOLKL=0.
        VOLKL=0.
        PHOTKL=0.
C*****************
C  VOLATILIZATION:
C*****************
C ONLY THE DISSOLVED SH2 MOLECULE IN SURFACE WATERS CAN VOLATILIZE:
        IF(TYPEE(J).GE.2.) GO TO 170
C CALCULATE CONST REAERATION FROM DEPTH AND VELOC FIRST TIME STEP
          IF(INITB.GT.2) GO TO 150
            CALL REOX(J,0.,K20)
            KO2G(J) = K20
150       CONTINUE
C CHECK FOR INFINITE RESISTANCE TO TRANSPORT (E.G. ICE COVER):
        IF (WIND.EQ.0.) GO TO 170
C CHECK ON DATA AVAILABILITY:
        IF(MWTG.EQ.0. .OR. (HENRYG.EQ.0. .AND. VAPRG.EQ.0.)) GO TO 170
C CALCULATE LOCAL REAERATION
        KO2L = KO2G(J)
        CALL REOX(J,WIND,K20)
        IF(K20.GT.KO2L) KO2L=K20
C CALL 2-FILM VOLATILIZATION SUBROUTINE, RETURN 1ST-ORDER RATE CONST.:
        CALL VOLAT(J,VOLKL)
        VOLKG(J) = VOLKL*24.
170     CONTINUE
```

```
C
C COMPUTE ACTIVE BACTERIAL POPULATIONS FOR  ****-BIOLYSIS-***:
        ACBACL = BACTOG(J)
C COMPUTE ACID/BASE CONCENTRATIONS FOR ***-HYDROLYSIS-***:
        HPLUS=10.**(-PH)
        HYDRX=10.**(-POH)
C INITIALIZE COUNTER FOR COMPUTING INDEX FOR ALPHA VECTOR:
        II=-1
C NEUTRAL FORM OF COMPOUND ONLY
        K=1
C
C*************
C  PHOTOLYSIS:
C*************
C COMPUTE RATE CONSTANT, ADJUST BY QUANTUM YIELD AND DISTRIBUTION
C COEFF(ALPHA)
C CASE 1. SEDIMENT COMPARTMENT WHERE NO LIGHT PRESENT
        IF(TYPEE(J).GE.3.) GO TO 180
C CASE 2. DIRECT LOAD BY USER OF RATE CONSTANT @40N LATITUDE

C THIS SUBROUTINE WILL ADJUST IT FOR LAT, TIME OF DAY, AND LAT
C BASED ON THE ZENITH LIGHT EXTINCTION COEFF.
        IF(KDPG.GT.0) CALL PHOTO1(KDPL,J)
180     CONTINUE
C-------------------------------------------------------------------
C-------------------------------------------------------------------
C
C 3 FORMS OF EACH SPECIES (DISSOLVED, SORBED WITH SEDIMENT, BIOSORBED)
C
        DO 190 I=1,3
C
C*************
C PHOTOLYSIS:
C*************
       IF (TYPEE(J).GE.3.) KDPL = 0.
C  ADD CURRENT CONTRIBUTION TO RATE CONSTANT
         PHOTKL = PHOTKL + ALPHA(I) * KDPL * (QUANTG(I,K))
C
C*************
C HYDROLYSIS:
C*************
C LOAD THE GLOBAL (INPUT) VALUE OF THE RATE CONSTANTS AND ADJUST
C FOR ENVIRONMENTAL TEMPERATURE, ETC.:
C ACID HYDROLYSIS:
                KAHL=KAHG(I,K)
                IF(EAHG(I,K).NE.0.) KAHL=10.**(KAHG(I,K)-((1000.*
     .           EAHG(I,K))/(4.58*TKEL)))
C NEUTRAL HYDROLYSIS:
                KNHL=KNHG(I,K)
                IF(ENHG(I,K).NE.0.) KNHL=10.**(KNHG(I,K)-((1000.*
     .           ENHG(I,K))/(4.58*TKEL)))
```

```
C ALKALINE HYDROLYSIS:
                KBHL=KBHG(I,K)
                IF(EBHG(I,K).NE.0.) KBHL=10.**(KBHG(I,K)-((1000.*
     .           EBHG(I,K))/(4.58*TKEL)))
C
C ADD CURRENT CONTRIBUTION TO TOTAL RATE CONSTANT:
        HYDRKL=HYDRKL+ALPHA(I)*(KAHL*HPLUS+KNHL+KBHL*HYDRX)
C
C***********
C OXIDATION:
C***********
                KOXL=KOXG(I,K)
                IF(EOXG(I,K).NE.0.) KOXL=10.**(KOXG(I,K)-((1000.*
     .           EOXG(I,K))/(4.58*TKEL)))
C ADD CURRENT CONTRIBUTION TO TOTAL RATE CONSTANT:
        OXIDKL=OXIDKL+ALPHA(I)*KOXL*OXRADG(J)
C
C**********
C BIOLYSIS:
C**********
C LOAD GLOBAL (INPUT) VALUE OF RATE CONSTANTS:
                KBACWL=KBACWG(I,K)
                KBACSL=KBACSG(I,K)
                IF(QTBAWG(I,K).NE.0.) KBACWL=KBACWG(I,K)*
     .            QTBAWG(I,K)**((TEMPN*BIOTMG(J)-20.)/10.)
                IF(QTBASG(I,K).NE.0.) KBACSL=KBACSG(I,K)*
     .           QTBASG(I,K)**((TEMPN*BIOTMG(J)-20.)/10.)
C ADD CURRENT CONTRIBUTION TO TOTAL RATE CONSTANTS:
                BIOLKL=BIOLKL+ALPHA(I)*ACBACL
     .                *(KBACWL*INDEXW + KBACSL*INDEXS)
C
190     CONTINUE
C END OF FORMS (DISSOLVED, SORBED, BIOSORBED) LOOP
C ---------------------------------------------------------------------
C
C INCREMENT ALPHA INDEX COUNTER:
200     CONTINUE
        II=II+1
210     CONTINUE
C
C          COMPUTE TOTAL FIRST-ORDER RATE COEFFICIENT:
C
        TOTKL=(VOLKL+BIOLKL+OXIDKL+HYDRKL+PHOTKL)*24.
        TOTKG(J)=-TOTKL/24.
C
       RETURN
       END
C
C*********************************************************************
```

```
C*******************************************************************************
C
C
C                                    TOXIVOLT
C
C                                                          LAST REVISED 08/05/82
C*******************************************************************************
C
        SUBROUTINE VOLAT(K,RATEK)
C-------------------------------------------------------------------------
C VOLAT. VOLAT COMPUTES VOLATILIZATION RATE CONSTANTS USING A TWO-FILM
C MODEL OF MOVEMENT OF TOXICANT ACROSS THE AIR-WATER INTERFACE.
C
C BETA IS THE FRACTION OF THE TOXICANT PRESENT AS THE NEUTRAL DISSOLVED
C MOLECULE, RATEK IS THE FIRST-ORDER RATE COEFFICIENT TO BE COMPUTED.
C K IS THE NUMBER OF THE CURRENT COMPARTMENT.
C
C LOCAL VARIABLES FOR THIS SUBROUTINE:
C       KO2L, BETA,COND,HENRYL,RATEK,RESGAS,RESLIQ,SOLL,TKEL,VAPRL,WAT
C
C-------------------------------------------------------------------------
C
      REAL MWTG,  KO2L,KVOG
C
      INCLUDE 'WSPCMN.F4P'
C
      DIMENSION   WINDG(SG), DEPTHG(SG)
      EQUIVALENCE (CONST(40),BETA),(CONST(43),MWTG),(CONST(44),HENRYG),
     .            (CONST(45),VAPRG), (CONST(46), KVOG),
     .            (CONST(47),SOLG), (CONST(48),ESOLG),
     .            (CONST(49), EVPRG), (CONST(50),EHENG),
     .            (CONST(51),WIND),(CONST(52),KO2L),(CONST(71),TKEL)
      EQUIVALENCE (PARAM(1,2), DEPTHG(1)), (PARAM(1,4),WINDG(1))
C-------------------------------------------------------------------------
C EVALUATE OXYGEN TRANSFER RATE FROM INPUT DATA:
C REAERATION IN CM/HR @ 20 DEG. C. IN INPUT DATA, HERE CONVERTED TO
C UNITS OF METERS/HOUR AND ADJUSTED FOR LOCAL TEMPERATURE
        KO2L=(KO2L/100.)*(1.024**((TKEL-273.15)-20.))
C-------------------------------------------------------------------------
C LIQUID PHASE RESISTANCE: USE EXPERIMENTAL VALUE IF AVAILABLE,
C OTHERWISE ESTIMATE FROM MOLECULAR WEIGHT:
        IF(KVOG.GT.0.) GO TO 100
C COMPUTE LIQUID PHASE RESISTANCE:
        RESLIQ=1./(KO2L*SQRT(32./MWTG))
        GO TO 150
100     CONTINUE
        RESLIQ=1./(KO2L*KVOG)
C
150     CONTINUE
C-------------------------------------------------------------------------
C COMPUTE GAS PHASE RESISTANCE:
```

```
C ----------------------------
        IF(HENRYG.GT.0.) GO TO 500
C
C COMPUTE HENRY'S LAW CONSTANT FROM VAPOR PRESSURE AND SOLUBILITY:
C CONVERT VAPOR PRESSURE TO ATMOSPHERES:
        VAPRL=VAPRG/760.
C
C TEMPERATURE CORRECTION:
        IF(EVPRG.NE.0.) VAPRL=(10.**(VAPRG-((1000.*EVPRG)/(4.58*TKEL)
     2  )))/760.
C
C COMPUTE SOLUBILITY AS MOLES PER CUBIC METER:
C
        SOLL=SOLG
C TEMPERATURE CORRECTION:
        IF(ESOLG.NE.0.) SOLL=(10.**(SOLG-((1000.*ESOLG)/
     2  (4.58*TKEL))))*MWTG*1000.
C
C CONVERT MG/L TO MOLES/CU. M.
        SOLL=SOLL/MWTG
C
        HENRYL=VAPRL/SOLL
C
        GO TO 600
500     CONTINUE
        HENRYL=HENRYG
        IF(EHENG.NE.0.) HENRYL=10.**(HENRYG-((1000.*EHENG)/(4.58*TKEL)
     1))
600     CONTINUE
C
C COMPUTE WATER VAPOR TRANSPORT TERM A FUNCTION OF WINDSPEED
C (LISS 1973. DEEP-SEA RESEARCH 20:221)
        WAT=.1857 + 11.36 * WIND
C
C GAS PHASE RESISTANCE:
        RESGAS = 1./ ((WAT*HENRYL*SQRT(18./MWTG))/(TKEL*8.206E-5))
C   (GAS CONSTANT IS 8.206E-5, MOL WT OF WATER IS 18.)
C-----------------------------------------------------------------
C COMPUTE OVERALL FIRST ORDER VOLATILIZATION COEFFICIENT:
        COND=1./(RESLIQ+RESGAS)
        RATEK=(COND*BETA/(DEPTHG(K)/3.28))
C THE ADDITION TO THE ABOVE EXPRESSION ACCOUNTS FOR A FT TO METER
C CONVERSION.
C-----------------------------------------------------------------
        RETURN
        END
C
C*****************************************************************************
```

```
C*************************************************************************
C
C
C                                  TOXIREOX
C
C                                                          LAST REVISED 08/05/82
C*************************************************************************
C
      SUBROUTINE REOX(J,WINDSG,K20)
C
       INCLUDE 'WSPCMN.F4P'
C
       REAL K20
C
       DIMENSION DEPTHG(SG),VELOC(SG)
C
       EQUIVALENCE (PARAM(1,3),VELOC(1)),(PARAM(1,2),DEPTHG(1))
C     calculate oxygen reaeration
C
C
C
C     DATA CFOREA/1.0/
      CFOREA=1.0
C
C
C
      AVDEPE = DEPTHG(J)
      AVVELE = VELOC(J)
      TEMPSG = 20.
C
      IF(WINDSG.EQ.0.) GO TO 30
C         this reach/res is a lake or reservoir
C
C         calculate reaeration coefficient based on windspeed, surface
C         area, and volume; WINDSG is windspeed in m/sec;
C         WINDF IS IN CM/HR
C
          IF (WINDSG.LE.6.0) GO TO 10
C           determine windspeed factor empirically
            WINDF= WINDSG *(-.46 + .136*WINDSG)
            GO TO 20
10        CONTINUE
C           assign value of 2.0 as windspeed factor
            WINDF= 2.0
20        CONTINUE
C
C         calculate reaeration coefficient
          K20= (.032808*WINDF*CFOREA/AVDEPE)
C         CONVERT 1/HR TO CM/HR
          K20 = K20*DEPTHG(J)/0.03281
C
```

```
        RETURN
C
30      CONTINUE
        IF(AVVELE.GT.0.) GO TO 40
          K20 = 0.0
          RETURN
40      CONTINUE
C         calculate reaeration coefficient for free-flowing reach
C
C             calculate reaeration coefficient as a power function of
C             average hydraulic depth and velocity; determine exponents
C             to depth and velocity terms and assign value to REAK
C
              IF (AVDEPE.GT.2.0) GO TO 50
C               use Owen's formulation for reaeration
                REAK= .906
                EXPREV= 0.67
                EXPRED= -1.85
                GO TO 100
C
50            CONTINUE
C               calculate transition depth; transition depth determines
C               which method of calculation is used given the current
C               velocity
C
                IF (AVVELE.GE.1.7) GO TO 60
                  TRANDP= 0.0
                  GO TO 70
60              CONTINUE
                  TRANDP= .4263*(AVVELE**2.9135)
70              CONTINUE
C
                DIF= AVDEPE- TRANDP
                IF (DIF.GT.0.0) GO TO 80
C                 use Churchill's formulation for reaeration
                  REAK= .484
                  EXPREV= .969
                  EXPRED= -1.673
                  GO TO 90
C
80              CONTINUE
C                 use O'Connor-Dobbins formulation for reaeration
                  REAK= .538
                  EXPREV= 0.5
                  EXPRED= -1.5
C
90              CONTINUE
C
100           CONTINUE
C
C           calculate reaeration coefficient
```

```
            K20  = REAK*(AVVELE**EXPREV)*(AVDEPE**EXPRED)
C           CONVERT 1/HR TO CM/HR
            K20 = K20*DEPTHG(J)/.03281
C
130       CONTINUE
C
C
      RETURN
      END


C*********************************************************************
C
C
C                                   TOXIPHOT
C
C
C*********************************************************************
C
       SUBROUTINE PHOTO1(RATEK,J)
C-----------------------------------------------------------------------
C PHOTO1 ACCEPTS A MEASURED (CLEAR DAY) PHOTOLYSIS RATE CONSTANT
C AT A SPECIFIED REFERENCE LATITUDE AS INPUT DATA.  PHOTO1 CORRECTS THIS
C RATE CONSTANT FOR DEVIATION OF THE LATITUDE OF THE ECOSYSTEM FROM THE
C REFERENCE LATITUDE, EFFECTS OF CLOUD COVER, AND LIGHT EXTINCTION IN
C THE WATER COLUMN BASED ON A SINGLE-VALUED ZENITH LIGHT EXTINCTION
C COEFFICIENT ENTERED AS PART OF THE CANONICAL ENVIRONMENTAL DATA.
C THE RATE IS FURTHER MODIFIED BY THE TIME-VARYING FACTOR 'LIGHTN'
C TO APPROXIMATE SEASONAL CHANGES IN INCIDENT LIGHT INTENSITY.
C-----------------------------------------------------------------------
          REAL LATG, KDPG, KDPL, IZERO, LIGHTL, LIGHTN, LOPT
C
C INTERNAL VARIABLES:LIGHTL,IZERO,BOTLIT,XXX,XTES
C
C
          INCLUDE 'WSPCMN.F4P'
C
C
          DIMENSION TYPEE(SG), DEPTHG(SG), CMPETG(SG)
          EQUIVALENCE (CONST(54),KDPG), (CONST(55),RFLATG),
     .                (CONST(56),CLOUDG), (CONST(57),LATG),
     .                (CONST(58),DFACG),(CONST(66),LOPT),
     .                (CONST(78),LIGHTN),(CONST(81),BOTLIT),
     .                (CONST(82),TIMCHK)
          EQUIVALENCE (PARAM(1,2), DEPTHG(1)), (PARAM(1,5),TYPEE(1)),
     .                (PARAM(1,17), CMPETG(1))
C
C-----------------------------------------------------------------------
C
      DEPTHM = DEPTHG(J) / 3.281
```

```
C
C EXPONENTIAL LIGHT DISAPPEARANCE PRODUCES UNDERFLOWS IF THE EXPONENT
C IS GREATER THAN 87.4 (ON MACHINES  WITH RANGE E-38).
       XTES=87.4
C
C THE DISTRIBUTION FACTOR (DFACG) IS THE OPTICAL PATH IN THE COMPARTMENT
C AS A RATIO TO THE DEPTH.  IT IS DIFFICULT TO COMPUTE, BUT A PROBABLE
C BEST VALUE IS 1.19 (HUTCHINSON, TREATISE LIMNOLOGY).  HOWEVER, IN
C THE PRESENCE OF A LARGE CONCENTRATION OF SCATTERING PARTICLES, IT
C MAY APPROACH OR REACH 2.0.  IN ORDER TO ENSURE THAT AN IMPROPER VALUE
C IS NOT LOADED AND USED IN COMPUTATIONS, THE INPUT DFACG IS CHECKED
C AND SET TO 1.19 IF THE INPUT IS INVALID.
       IF (DFACG.LT.1. .OR. DFACG.GT.2.) DFACG=1.19
C COMPUTE AVERAGE LIGHT LEVEL (AS FRACTION OF INCIDENT LIGHT) FROM
C THE COMPOSITE ZENITH LIGHT EXTINCTION COEFFICIENT ENTERED BY USER:
C
C  INITIAL SEGMENT IS NECESSARILY A WATER COLUMN WITHOUT AN OVERLYING
C WATER MASS:
       IF (TYPEE(J).GT.1.) GO TO 160
C
C COMPUTE LIGHT LEVEL AT BOTTOM OF COMPARTMENT:
C
         XXX = CMPETG(J)*DEPTHM*DFACG
         IF(XXX.GT.XTES) BOTLIT=0.
         IF(XXX.LE.XTES) BOTLIT=EXP(-XXX)
         LIGHTL=(1.-BOTLIT)/(CMPETG(J)*DEPTHM*DFACG)
         GO TO 200
160    CONTINUE
C
C WATER COLUMN WITH AN OVERLYING WATER MASS: BOTLIT CONTAINS THE
C (RELATIVE) LIGHT INTENSITY AT THE TOP OF THE CURRENT COMPARTMENT:
         IZERO=BOTLIT
         XXX=CMPETG(J)*DEPTHM*DFACG
         IF(XXX.GT.XTES) BOTLIT=0.
         IF(XXX.LE.XTES) BOTLIT=IZERO*EXP(-XXX)
         LIGHTL=(IZERO-BOTLIT)/(CMPETG(J)*DEPTHM*DFACG)
C
200    CONTINUE
C
C COMPUTE LATITUDE CORRECTION FACTOR:
C
       FACTOR=(191696.65+87054.63*COS(0.0349*LATG))/(191696.65+
     .  87054.63*COS(0.0349*RFLATG))
C
C ADJUST RATE FOR CLOUDINESS, LATITUDE, LIGHT EXTINCTION, AND VARIABILITY
C
       RATEK=KDPG*LIGHTL*(1.-0.056*CLOUDG)*FACTOR*LIGHTN
C
C
       RETURN
       END
C
```

```
C*************************************************************************
C
C                              TOXISEDW
C
C                                                        LAST REVISED 03/09/83
C*************************************************************************
C
        SUBROUTINE SEDWAT (J,ALPH1M,ALPH2M)
C
        INCLUDE 'WSPCMN.F4P'
C-------------------------------------------------------------------------
        REAL  KP
        DIMENSION DISPV(SG),ALPHA(3),TYPEE(SG),FRW(SG),DSPSED(SG),KP(SG)
        EQUIVALENCE (CONST(40),ALPHA(1))
        EQUIVALENCE (PARAM(1,13),FRW(1)),(PARAM(1,14),DSPSED(1)),
     .       (PARAM(1,5),TYPEE(1)),(PARAM(1,19),DISPV(1)),
     .       (PARAM(1,12),KP(1))
C
C-------------------------------------------------------------------------
C
      IF (INITB.GT.1) GO TO 300
      INITB=2
C
C        FIND PORE WATER EXCHANGES AND CALCULATE DISPV
C
      DO 200 I=1,NOR
        II=NOR-I+1
        I1=IR(II)
        I2=JR(II)
        IF(I1.EQ.0.OR.I2.EQ.0)GO TO 200
        TYP1=TYPEE(I1)
        TYP2=TYPEE(I2)
        DISP=BR(II)
        IF(TYP1.LE.2.) GO TO 105
          POROS=FRW(I1)
          IF(TYP1.EQ.4.) POROS=(FRW(I1)+FRW(I2))/2.
          DISPV(I1)=3.336E-06*DISP*POROS
          BR(II)=0.0
          IF(TYP1.NE.3.) DSPSED(I1)=0.0
 105    CONTINUE
        IF(TYP2.LE.2.) GO TO 200
          POROS=FRW(I2)
          IF(TYP2.EQ.4.) POROS=(FRW(I1)+FRW(I2))/2.
          DISPV(I2)=3.336E-06*DISP*POROS
          BR(II) = 0.0
          IF(TYP2.NE.3.) DSPSED(I2)=0.0
 200  CONTINUE
C BR COMES FROM WASP2 IN UNITS OF (MCF/SEC)*(CM/MI)**2. THE 3.336E-06
C PERFORMS THE CONVERSION TO THE DESIRED UNITS OF MCF/DAY.
 300  CONTINUE
      VOLPW=BVOL(J)*FRW(J)
```

```
      M=J-1
      CHEM=C(1,J)
      SED=C(2,J)
      CHEMW=C(1,M)
      SEDW=C(2,M)/1.E06
      SEDCOL=SED*1.E-06/FRW(J)
      CHEM1W=C(1,M)*ALPH1M/FRW(M)
      CHEM2W=C(1,M)*ALPH2M
      CHEMSW=CHEM2W/SEDW
      CHEM1S=C(1,J)*ALPHA(1)/FRW(J)
      CHEM2S=C(1,J)*ALPHA(2)
      CHEMSS=1.E06*CHEM2S/SED
C
      WATFL=DISPV(J)*DT
      IF(WATFL.GT.VOLPW) WATFL=VOLPW
      WATFL=WATFL/DT
      SEDFL=WATFL*SEDCOL*DSPSED(J)
C
      EXUP = WATFL * CHEM1S + SEDFL * CHEMSS
      EXDO = WATFL * CHEM1W + SEDFL * CHEMSW*KP(J)/KP(M)
C
      CD(1,M) = CD(1,M) + EXUP - EXDO
      CD(1,J) = CD(1,J) - EXUP + EXDO
C
      RETURN
      END
C
C*****************************************************************************
```

```
C***********************************************************************
C
C                                  TOXISETL
C
C                                                     LAST REVISED 01/12/82
C***********************************************************************
C
          SUBROUTINE SETTLE(J,SETINS,SETOUS,SETINC,SETOUC)
C
C-----------------------------------------------------------------------
          INCLUDE 'WSPCMN.F4P'
          REAL KP
          DIMENSION DEPTHG(SG),TYPEE(SG),WS(SG),FRW(SG),ALPHA(3),KP(SG)
          DIMENSION VVOL(SG),BVOLO(SG),RVOL(SG),BMASS(SG)
          EQUIVALENCE (CONST(67),BURY),(CONST(40),ALPHA(1)),
     .                (CONST(41),ALPHA(2)),(CONST(85),TMASS)
          EQUIVALENCE (CONST(53),DUMMY6)
          EQUIVALENCE (PARAM(1,5),TYPEE(1)),(PARAM(1,16),WS(1)),
     .                (PARAM(1,13),FRW(1)), (PARAM(1,2), DEPTHG(1)),
     .                (PARAM(1,12),KP(1))
          EQUIVALENCE (PARAM(1,22),VVOL(1)),(VVOL(1),BVOLO(1)),
     .                (VVOL(1),RVOL(1)),(PARAM(1,23),BMASS(1))
C
C-----------------------------------------------------------------------
C
C
C-----------------------------------------------------------------------
      CHEM=C(1,J)
      SED =C(2,J)
      VOL =BVOL(J)
      DEPTH=DEPTHG(J)
      DEPTHM=DEPTHG(J)/3.281
      SA=VOL/DEPTH
      ITYPE=TYPEE(J)
      M=J-1
      N=J+1
      NN=J+2
      FAC=DUMMY6
      GO TO (100,200,300,400), ITYPE
C***********************************************************************
C             SURFACE WATER SEGMENT
C***********************************************************************
100   CONTINUE
        SETINS=0.
        SETINC=0.
        GO TO 250
C***********************************************************************
C             SUBSURFACE WATER SEGMENT
C***********************************************************************
200   CONTINUE
        SETINS=SETOUS
        SETINC=SETOUC
```

```
C
C             ALL WATER SEGMENTS
C
250   CONTINUE
        SETOUS=SED*WS(J)*VOL/DEPTHM
        SETOUC=CHEM*ALPHA(2)*WS(J)*VOL/DEPTHM
C       (MASS RATE UNITS ARE MCF*MG/L PER DAY)
        CD(1,J)=CD(1,J)+SETINC-SETOUC
        CD(2,J)=SETINS-SETOUS
C             CHECK FOR INFILTRATION
        IF(TYPEE(NN).NE.4) RETURN
          PERC=WS(NN)*1.E-06*86400.
          IF(PERC.GE.0.) RETURN
            PERCMS=PERC*ALPHA(1)*CHEM/FRW(J)
            CD(1,J)=CD(1,J) + PERCMS
            CD(1,N)=CD(1,N) - PERCMS
            RETURN
C*************************************************************************
C             TOP BENTHIC SEGMENT
C*************************************************************************
300   CONTINUE
        VOLW=BVOL(M)
        SETINS=SETOUS
        SETINC=SETOUC
        SETOUS=SED*WS(J)/(365.*100.)*VOL/DEPTHM
C       (MASS RATE OF SEDIMENT SCOUR)
        SETOUC=CHEM*ALPHA(2)*SETOUS/SED
C       (MASS RATE OF SORBED CHEMICAL SCOUR)
        CD(1,J)=CD(1,J)+SETINC-SETOUC
        CD(2,M)=CD(2,M)+SETOUS
        CD(1,M)=CD(1,M)+SETOUC
        BURY=(SETINS-SETOUS)*DEPTHM/(VOL*SED)
C       (NET BURIAL IN M/DAY)
        EDEPTH=3.208*BURY*DT
        EVOL=VOL*EDEPTH/DEPTH
        IF(BURY.LT.0.) GO TO 350
C
C             SEGMENT IS ACCRETING
C
          IF(EVOL.GT.VOLW) GO TO 375
            DEPTHG(J)=DEPTHG(J)+EDEPTH
            DEPTHG(M)=DEPTHG(M)-EDEPTH
            BVOL(J)=BVOL(J)+EVOL
            BVOL(M)=BVOL(M)-EVOL
C
C             CHECK FOR LAYER BURIAL
C
            TMASS=0.
            IF(BVOL(J).LT.RVOL(M)) GO TO 375
C           (RVOL FOR SEG "J" IS STORED AT LOC "M")
              FVOL = BVOL(J) - BVOL0(J)
C             (FVOL = FAC*BVOL(N)*SED(N)/SED(J))
```

```
              SVOL = FVOL - FAC*BVOL(N)
C             (VOL PORE WATER SQUEEZED OUT TO WATER COLUMN)
C             (SVOL = FAC * BVOL(N) * (SED(N)/SED(J) - 1)
              DEPTHG(M) = DEPTHG(M) + SVOL/SA
              DEPTHG(J) = DEPTHG(J) - FVOL/SA
              BVOL(M) = BVOL(M) + SVOL
              BVOL(J) = BVOL(J) - FVOL
              TMASS = FVOL * CHEM
              SMASS = SVOL * ALPHA(1) * CHEM/FRW(J)
              C(1,M) = C(1,M) + SMASS/BVOL(M)
              TMASS = TMASS - SMASS
C             (MASS CHEM BURIED TO LOWER LAYER, IN MCF*MG/L)
              IF(TMASS.EQ.0.) TMASS=1.E-12
              GO TO 375
C
C             SEGMENT IS ERODING
C
350       CONTINUE
            EDEPTH=-EDEPTH
            EVOL=-EVOL
            IF(EVOL.GT.VOL) GO TO 370
              DEPTHG(J)=DEPTHG(J)-EDEPTH
              DEPTHG(M)=DEPTHG(M)+EDEPTH
              BVOL(J)=BVOL(J)-EVOL
              BVOL(M)=BVOL(M)+EVOL
              GO TO 375
C
C               LAYER ERODED
C
370           CONTINUE
              IF(TYPEE(N).NE.4.) GO TO 375
                DEPTHG(J) = DEPTHG(N)
                DEPTHG(M) = DEPTHG(M) + EDEPTH
                BVOL(J) = BVOL(N)
                BVOL(M) = BVOL(M) + EVOL
                C(1,J) = C(1,N)
                C(2,J) = C(2,N)
                FRW(J) = FRW(N)
                KP(J) = KP(N)
                TMASS = -1.
375       CONTINUE
C
C             CHECK FOR PERCOLATION/INFILTRATION
C
          IF(TYPEE(N).NE.4.) RETURN
            PERC=WS(N)*1.E-06*86400.
            PERCMS=PERC*ALPHA(1)*CHEM/FRW(J)
            IF(PERCMS.LT.0.) GO TO 380
              CD(1,J)=CD(1,J) - PERCMS
              CD(1,M)=CD(1,M) + PERCMS
              RETURN
380         CONTINUE
```

```
            CD(1,J)=CD(1,J) + PERCMS
            CD(1,N)=CD(1,N) - PERCMS
            RETURN
C*****************************************************************************
C             LOWER BENTHIC SEGMENT
C*****************************************************************************
400   CONTINUE
        SETINC=0.
        SETINS=0.
        SETOUS=0.
C
C             CHECK FOR PERCOLATION/INFILTRATION
C
          PERC=WS(J)*1.E-06*86400.
          PERCMS=PERC*ALPHA(1)*CHEM/FRW(J)
          IF(PERCMS.LT.0.) GO TO 480
            CD(1,J)=CD(1,J)-PERCMS
            CD(1,M)=CD(1,M)+PERCMS
            GO TO 500
480       CONTINUE
            CD(1,J)=CD(1,J)+PERCMS
            IF(TYPEE(N).EQ.4.) CD(1,N)=CD(1,N)-PERCMS
500       CONTINUE
C
C            CHECK FOR BURIAL OR EROSION OF A LAYER
C
          IF(TMASS.EQ.0.) RETURN
            IF(TMASS.LT.0.) GO TO 525
C
C             BURIAL OF LAYER
C
              TMPM = FAC * C(1,J) * BVOL(J)
              C(1,J) = C(1,J) + (TMASS-TMPM)/BVOL(J)
              TMASS = TMPM
              IF(TYPEE(N).NE.4.) BMASS(J)=BMASS(J)+TMASS*28.317
C             (28.317 KG PER MCF*MG/L)
              IF(TMASS.EQ.0.) TMASS=1.E-12
              RETURN
525         CONTINUE
C
C             EROSION OF LAYER
C
              C(1,J) = C(1,N)
              IF(TYPEE(N).EQ.4.) RETURN
                C(1,J) = 0.0
                TMASS = 0.0
                RETURN
C
C
      END
C
C*****************************************************************************
```

```
C***********************************************************************
C
C
C                                TOXIFREQ
C
C                                                    LAST REVISED 07/30/82
C***********************************************************************
C
      PROGRAM FREQ
C
C
C-----------------------------------------------------------------------
      COMMON/STAORD/Z(10000)
C
      DIMENSION CC(4),CUM(8,50),DIST(10),CUMZ(8)
      REAL NAME(4)
C
      DATA NAME/4HCTOT,4HCDIS,4HCSED,4HCBIO/
      DATA DIST/.01,.05,.10,.30,.50,.70,.90,.95,.99,1.00/
C
C-----------------------------------------------------------------------
C
      REWIND 2
C
C
10    CONTINUE
        READ(2,END=25) TZERO,TIME,ICOUNT,JTR,JSTR
        READ(2,END=25) ICOUNT,TIME,(CC(K),K=1,4)
        READ(2,END=25) ICOUNT,TIME,(CC(K),K=1,4)
        GO TO 10
25    CONTINUE
      REWIND 2
C
C
      IP = 1
      LP = ICOUNT
      NUMC = 4
      NJSTAT = 2
      NU = 2
      IPL = 0
C
      WRITE(6,600) ICOUNT,TZERO,TIME,(DIST(K),K=1,10)
C
      DO 116 II=1,NUMC
        DO 114 JJ=1,NJSTAT
          IPL = IPL+1
          J = JTR
          IF(JJ.EQ.2) J=JSTR
          REWIND NU
          II1 = JJ
          KK  = 0
            DO 106 I=IP,LP
```

```
            READ(NU) TZERO,TIME,ICOUNT,JTR,JSTR
            KK = KK + 1
              DO 102 L=1,III
                READ (NU) ICYC,TIME, (CC(K), K=1,NUMC)

  102           CONTINUE
            Z(KK) = CC(II)
            L2    = NJSTAT - JJ
            IF (L2.EQ.0) GO TO 106
              DO 104 M=1,L2
                READ (NU) ICYC,TIME, (CC(K), K=1,NUMC)

  104           CONTINUE
  106       CONTINUE
          CALL ORDER (IP, LP)
C
C                       COMPUTE STATISTICS USING ORDERED DATA
C
C                                  MIN  MAX  AVG
          ND = LP - IP + 1
          ZAVG = 0.
            DO 108 N=1,ND
              ZAVG = ZAVG + Z(N)
  108       CONTINUE
          ZAVG = ZAVG / FLOAT(ND)
          ZMIN = Z(1)
          CUMZ(IPL) = Z(1)
C                                  PERCENTILES
C         PROB = FLOAT(ND) / 10.
            DO 110 K=1,10
C             IDIST  = FLOAT(K) * PROB
              IDIST = DIST(K) * FLOAT(ND)
              IF(IDIST.EQ.0) IDIST=1
              CUM(IPL,K) = Z(IDIST)

  110       CONTINUE
C                               SKEWNESS + KURTOSIS
          SDIFF2 = 0.
          SDIFF3 = 0.
          SDIFF4 = 0.
            DO 112 N=1,ND
              DIFF   = Z(N) - ZAVG
              SDIFF2 = SDIFF2 + DIFF**2
              SDIFF3 = SDIFF3 + DIFF**3
              SDIFF4 = SDIFF4 + DIFF**4
  112       CONTINUE
          XND  = 1. / FLOAT(ND)
          XNU = FLOAT(ND) - 1.0
          SDEV = SQRT(SDIFF2/XNU)
          SKEW = (XND * SDIFF3) / ((XND * SDIFF2)**1.5)
          CURT = ((XND * SDIFF4) / (((XND * SDIFF2)**2)) -3)
C
```

```
C                                OUTPUT STATISTIC TABLES
C
          WRITE (6,602) NAME(II),J,ZAVG,SDEV,SKEW,ZMIN,
                        (CUM(IPL,K),K=1,10)
C
C                               PREPARE PROBABILITY TABLES
C
          DO 150 K=1,50
            PDIST=FLOAT(K)/50.
            IDIST=PDIST*FLOAT(ND)
            CUM(IPL,K)=Z(IDIST)
150       CONTINUE
114     CONTINUE
116   CONTINUE
      REWIND NU
C
C                               OUTPUT CUM PROBABILITY TABLES
C
      WRITE(6,611)((NAME(I),JTR,NAME(I),JSTR),I=1,4)
      WRITE(6,612)(CUMZ(I),I=1,8)
      DO 220 K=1,50
        CUMPR=0.02*FLOAT(K)
        WRITE(6,613)((CUM(I,K),CUMPR),I=1,8)
220   CONTINUE
C
C                                    SET UP PLOTS
C
      IFIL=3
      WRITE(IFIL,612) (CUMZ(I),I=1,8)
      DO 250 K=1,50
        CUMPR=0.02*FLOAT(K)
        WRITE(IFIL,613) ((CUM(I,K),CUMPR),I=1,8)
250   CONTINUE
C
C                               FORMAT STATEMENTS
C
600   FORMAT (1H //20X,83(1H*),/,1X,19(1H*),'  STATISTICAL ANALYSIS OF',
     *I5,1X,'CHEMICAL CONCENTRATIONS FROM DAY',F5.1,' TO DAY',F6.1,2X,
     *22(1H*),/,20X,83(1H*),//,34X,34(1H*),'  CUMULATIVE PROBABILITIES
     *',34(1H*),/,1X,'VAR SG  MEAN    ST DEV SKEWNESS  0.00',
     *10F9.2,/,1X,128(1H-),/  )
602   FORMAT (A4,I2,3E9.2,11E9.2/)
604   FORMAT (1H1)
611   FORMAT(1H1/53X,'CUMULATIVE PROBABILITY'///
     .       2X,8(1X,A4,I4,2X,'PROB',1X)/
     .       3X,8(14(1H-),2X))
612   FORMAT(1H ,1X,8(E10.3,' 0.00',1X))
613   FORMAT(1H ,1X,8(E10.3,F5.2,1X))
      STOP
      END
C
C*********************************************************************
```

```
C*****************************************************************************
C
C
C                                    TOXIORDR

C
C
C*****************************************************************************
C
      SUBROUTINE ORDER (IP, LP)
      COMMON/STAORD/ Z(10000)
C
C                                ORDER THE X/ARRAY
C
      NM = LP - IP
C                                   FORWARD PASS
      DO 104 II=1,NM
        NCHNG = 0
          DO 100 K=1,NM
            IF (Z(K).LE.Z(K+1)) GO TO 100
              TEMP   = Z(K)
              Z(K)   = Z(K+1)
              Z(K+1) = TEMP
              NCHNG  = NCHNG + 1
  100     CONTINUE
        IF (NCHNG.EQ.0) RETURN
C                                   BACKWARD PASS
        NCHNG = 0
        DO 102 N = 1,NM
          K = NM - N + 1
            IF (Z(K).LE.Z(K+1)) GO TO 102
              TEMP   = Z(K)
              Z(K)   = Z(K+1)
              Z(K+1) = TEMP
              NCHNG  = NCHNG + 1
  102     CONTINUE
        IF (NCHNG.EQ.0) RETURN
  104 CONTINUE
      RETURN
      END
C
C*****************************************************************************
```

APPENDIX 3:
TOXIWASP Support Software

Appendix 3.1 Listing of TOXICMP.CMD

```
$ON WARNING CONT
$SET DEF DB0:
$DEL WSPCMN.F4P;*
$DEL OUTCMN.F4P;*
$COPY DB1:[55,116]2X50.COM WSPCMN.F4P
$COPY DB1:[55,116]OUTCMN.F4P OUTCMN.F4P
$DEL *.OBJ;*
$FO/F4P DB1:[55,116]WASPMAIN
$FO/F4P DB1:[55,116]WASP8
$FO/F4P DB1:[55,116]WAS8A
$FO/F4P DB1:[55,116]WERR
$FO/F4P DB1:[55,116]WMESS
$FO/F4P DB1:[55,116]SCALP
$FO/F4P DB1:[55,116]SETRA
$FO/F4P DB1:[55,116]SETIA
$FO/F4P DB1:[55,116]FILEOC
$FO/F4P DB1:[55,116]FMTER
$FO/F4P DB1:[55,116]WAS12
$FO/F4P DB1:[55,116]EULER
$FO/F4P DB1:[55,116]WAS13
$FO/F4P DB1:[55,116]WAS14
$FO/F4P DB1:[55,116]WASP1
$FO/F4P DB1:[55,116]WASP2
$FO/F4P DB1:[55,116]WASP3
$FO/F4P DB1:[55,116]WASP4
$FO/F4P DB1:[55,116]WASP5    $FO/F4P/OBJ:WASPB DB1:TOXIWASPD
$FO/F4P DB1:[55,116]WASP6    $FO/F4P DB1:TOXIVOLT
$FO/F4P DB1:[55,116]WASP7    $FO/F4P DB1:TOXISETL
$FO/F4P DB1:[55,116]WASP9    $FO/F4P DB1:TOXISEDW
$FO/F4P DB1:[55,116]WAS10    $FO/F4P DB1:TOXIPHOT
$FO/F4P DB1:[55,116]WAS11    $FO/F4P DB1:TOXINIT
$FO/F4P DB1:[55,116]WAS16    $FO/F4P DB1:TOXIDUMP
$FO/F4P DB1:[55,116]WAS17    $FO/F4P DB1:TOXIFORD
$FO/F4P DB1:[55,116]WAS19    $FO/F4P DB1:TOXIREOX
$FO/F4P DB1:[55,116]OUTPUT   $FO/F4P DB1:TOXIFREQ
$FO/F4P DB1:[55,116]TINIT    $FO/F4P DB1:TOXIORDR
$FO/F4P DB1:[55,116]WA12A    $@DB1:TOXITKB
$FO/F4P DB1:[55,116]SWFLOW   !$DEL *.OBJ;*
```

Appendix 3.2 Listing of TOXITKB.CMD, FREQTKB.CMD and TOXIODL.ODL

```
$ON WARNING CONT
$SET DEF DB0:
$DEL TOXIFREQ.TSK;*
$LINK/OPT/READ TOXIFREQ TOXIORDR
ACTFIL=6
/
```

```
$ON WARNING CONT
$SET DEF DB0:
$DEL TOXIWASP.TSK;*
$LINK/READ/OPT/OVER:DB1:TOXIODL/TASK:TOXIWASP
MAXBUF=1520
ACTFIL=5
UNITS=92
/
$SET DEF DB1:
$MESSAGE/TERMINAL:TT14
```

```
.ROOT  WASPMAIN-I-J-K-LI-*(L,N)
I:.FCTR WASP8-WAS8A-LI
J:.FCTR WERR-WMESS-SCALP-SETRA-SETIA-LI
K:.FCTR FILEOC-FMTER-LI
L:.FCTR EULER-(SWFLOW,WAS12-WA12A-OUTPUT-LI-M)
M:.FCTR *(WASPB-LI-WBS,TINIT-LI,WAS13-LI,WAS14-LI)
N:.FCTR *(O,P,Q,R,S,T,U,V,W,X,Y,Z,ZZ)
O:.FCTR WASP1-LI
P:.FCTR WASP2-LI
Q:.FCTR WASP3-LI
R:.FCTR WASP4-LI
S:.FCTR WASP5-LI
T:.FCTR WASP6-LI
U:.FCTR WASP7-LI
V:.FCTR WASP9-LI
W:.FCTR WAS10-LI
X:.FCTR WAS11-LI
Y:.FCTR WAS16-LI
Z:.FCTR WAS17-LI
ZZ:.FCTR WAS19-LI
WBS:.FCTR *(TOXINIT-LI,TOXISETL-LI,TOXISEDW-LI,TOXIDUMP-LI,TOXIFORD-LI-WBT)
WBT:.FCTR *(TOXIPHOT-LI,TOXIVOLT-LI,TOXIREOX-LI)
LI: .FCTR DB0:[1,1]F4PFCS/LB
.END
```

Appendix 3.3 Listing of JCL to Compile and Link Edit

```
//EPAXXXCL JOB (ACCTWASPMUSR,MUSR),'TOXIWASP CMPLNK',PRTY=4
//  EXEC FTG1CL
//FORT.SYSIN DD DSN=CN.EPAXXX.ACCT.TOXIWASP.FTN,DISP=SHR
//LKED.SYSLMOD DD UNIT=,SPACE=,DCB=,
//    DSN=CN.EPAXXX.ACCT.LOAD(TOXIWASP),DISP=SHR
//
```

Appendix 3.4 Listing of TOXIC.BIS

```
$JOB ROBERT TOXICS 9999
$ON WARNING CONT
$SET DEF DB0:
$DEL WASP.INP;*
$DEL *.XYZ;*
$DEL DB0:FOR006.DAT;*
$DEL FOR002.DAT;*
$COPY DB1:POND.INP WASP.INP
$ASS DB0: 6
$ASS DB1: 91
$ASS DB0: 5
$RUN TOXIWASP
$COPY DB0:FOR006.DAT POND.OUT
$PRINT/DELETE DB0:FOR006.DAT
$DELETE *.XYZ;*
$RUN TOXIFREQ
$PRINT DB0:FOR006.DAT
$EOJ
```

Appendix 3.5 Listing of JCL to Run Simulations

```
//EPAXXXWA JOB (ACCTWASPMUSR,MUSR),'TOXIWASPRUN',REGION=400K,TIME=2
//STEPA EXEC PGM=TOXIWASP
//STEPLIB DD DSN=CN.EPAXXX.ACCT.LOAD,DISP=SHR
//FT06F001 DD SYSOUT=A,
//       DCB=(RECFM=FBA,LRECL=133,BLKSIZE=3990)
//FT10F001 DD DSN=&TIMEHIST,DISP=(NEW,DELETE),
//       UNIT=SYSDA,SPACE=(TRK,(8,2)),VOL=SER=USER40,
//       DCB=(RECFM=VBS,LRECL=4,BLKSIZE=164)
//FT11F001 DD DSN=&DUMP11,DISP=(NEW,DELETE),
//       UNIT=SYSDA,SPACE=(TRK,(8,2)),VOL=SER=USER40,
//       DCB=(RECFM=VBS,LRECL=40,BLKSIZE=3120)
//FT12F001 DD DSN=&DUMP12,DISP=(NEW,DELETE),
//       UNIT=SYSDA,SPACE=(TRK,(8,2)),VOL=SER=USER40,
//       DCB=(RECFM=VBS,LRECL=40,BLKSIZE=3120)
//FT30F001 DD DSN=&BOUNDARY,DISP=(NEW,DELETE,DELETE),
//       UNIT=SYSDA,SPACE=(320,(252,50),RLSE,CONTIG),
//       DCB=(RECFM=F,BLKSIZE=320),VOL=SER=USER40
//FT50F001 DD DSN=&FORCING,DISP=(NEW,DELETE,DELETE),
//       UNIT=SYSDA,SPACE=(320,(492,50),RLSE,CONTIG),
//       DCB=(RECFM=F,BLKSIZE=320),VOL=SER=USER40
//FT70F001 DD DSN=&EXCHANGE,DISP=(NEW,DELETE,DELETE),
//       UNIT=SYSDA,SPACE=(320,(251,50),RLSE,CONTIG),
//       DCB=(RECFM=F,BLKSIZE=320),VOL=SER=USER40
//FT71F001 DD DSN=&VOLUME,DISP=(NEW,DELETE,DELETE),
//       UNIT=SYSDA,SPACE=(320,(121,50),RLSE,CONTIG),
//       DCB=(RECFM=F,BLKSIZE=320),VOL=SER=USER40
//FT72F001 DD DSN=&FLOWS,DISP=(NEW,DELETE,DELETE),
//       UNIT=SYSDA,SPACE=(320,(251,50),RLSE,CONTIG),
//       DCB=(RECFM=F,BLKSIZE=320),VOL=SER=USER40
//FT73F001 DD DSN=&STRLINE,DISP=(NEW,DELETE,DELETE),
//       UNIT=SYSDA,SPACE=(320,(21,20),RLSE,CONTIG),
//       DCB=(RECFM=F,BLKSIZE=320),VOL=SER=USER40
//FT75F001 DD DSN=&INTGHIST,DISP=(NEW,DELETE,DELETE),
//       UNIT=SYSDA,SPACE=(640,(1,1),RLSE,CONTIG),
//       DCB=(RECFM=F,BLKSIZE=640),VOL=SER=USER40
```

```
//FT80F001 DD DSN=&DUMPNAME,DISP=(NEW,DELETE,DELETE),
//       UNIT=SYSDA,SPACE=(80,(12,5),RLSE,CONTIG),
//       DCB=(RECFM=F,BLKSIZE=80),VOL=SER=USER40
//FT81F001 DD DISP=(NEW,DELETE,DELETE),UNIT=DISK,SPACE=(TRK,(1,1))
//FT90F001 DD DSN=&PLOTDATA,DISP=(NEW,DELETE,DELETE),
//       UNIT=SYSDA,SPACE=(640,(75,20),RLSE,CONTIG),
//       DCB=(RECFM=F,BLKSIZE=640),VOL=SER=USER40
//FT91F001 DD DSN=CN.EPAXXX.ACCT.DAILY.DAT,DISP=(OLD,KEEP)
//FT92F001 DD DSN=CN.EPAXXX.ACCT.SWFLOW.DAT,DISP=(OLD,KEEP)
//FT98F001 DD DSN=&DUMMY,DISP=(NEW,DELETE,DELETE),
//       UNIT=SYSDA,SPACE=(320,(251,50),RLSE,CONTIG),
//       DCB=(RECFM=F,BLKSIZE=320),VOL=SER=USER40
//FT05F001 DD *
```

Appendix 3.6 Listing of DAILYCVT

```
C-----------------------------------------------------------------------
C
C                            PROGRAM DAILYCVT
C
C                                                    LAST REVISED 08/27/82
C-----------------------------------------------------------------------
C       THIS PROGRAM CONVERTS FLOWS AND LOADINGS FROM USER SPECIFIED
C       FILES INTO UNFORMATED FORM FOR READING BY TOXIWASP.  THE
C       USER IS QUERIED FOR THE LOAD FILE NAME FORMAT AND NUMBER OF
C       SYSTEMS.  THE INDICATED FILES ARE THEN READ AND DATA WRITTEN
C       TO THE FILE DAILY.DAT ON THE DEFAULT DISK.
C-----------------------------------------------------------------------
C
        BYTE FILNM(30),FILNM2(30),FORMAT(80)
        REAL LOADS(10,30)
        VIRTUAL QT(10,1850)
        DIMENSION IQ(10),JQ(10)
        SCALQ=0.0
        NQOPT=0.0
        NOSYS=1
C
C-----------------------------------
C        GET OPTIONS
C-----------------------------------
C
        WRITE(5,*) ' ENTER LOAD OPTION AND FLOW OPTION'
        WRITE(5,*) ' 1 = DO LOADS (OR FLOWS)'
        WRITE(5,*) ' 0 = SKIP LOADS (OR FLOWS)'
        READ(5,*) NOWK,NOQ
        IF(NOWK.EQ.0) GO TO 190
C
C-----------------------------------
C       GET FILE NAME FOR LOADS
C-----------------------------------
C
1       CONTINUE
        WRITE(5,*) 'ENTER NAME OF INPUT LOADINGS FILE'
        READ(5,10) NC,FILNM
10      FORMAT(Q,30A1)
        NC = NC + 1
        IF(NC.GT.30) GO TO 90
        FILNM(NC) = 0
        OPEN(UNIT=1,NAME=FILNM,TYPE='OLD',ERR=90)
        NC=0
        GO TO 100
C
C       FILE NAME ERROR
C
90      CONTINUE
        WRITE(5,*) 'FILE NAME SPECIFICATION ERROR, OR FILE NOT FOUND'
```

```
        GO TO 1
C
C-----------------------------------
C       GET FORMAT OF FILE
C-----------------------------------
C
100     CONTINUE
        WRITE(5,*) 'ENTER FORMAT OF LOADS FILE IN PARENTHESIS. (23X,3E14.5)'
        READ(5,110) FORMAT
110     FORMAT(80A1)
C
C-----------------------------------
C       GET NUMBER OF SYSTEMS
C-----------------------------------
C
115     CONTINUE
        WRITE(5,*) 'ENTER NUMBER OF SYSTEMS AND LOAD SEGMENTS'
        READ(5,*) NOSYS,NOWK
        IF(NOSYS.LE.10) GO TO 190
        WRITE(5,*) 'SYSTEM LIMIT CURRENTLY SET AT 10 ... REENTER'
        GO TO 115
C
C
C
C-----------------------------------
C       GET FILE NAME FOR FLOWS
C-----------------------------------
C
190     CONTINUE
        IF(NOQ.EQ.0) GO TO 400
        WRITE(5,*) 'ENTER NAME OF INPUT FLOW FILE'
        READ(5,10) NC,FILNM2
        NC = NC + 1
        IF(NC.GT.30) GO TO 90
        FILNM2(NC) = 0
        OPEN(UNIT=3,NAME=FILNM2,TYPE='OLD',ERR=290)
        GO TO 300
C
C       FILE NAME ERROR
C
290     CONTINUE
        WRITE(5,*) 'FILE NAME SPECIFICATION ERROR, OR FILE NOT FOUND'
        GO TO 190
C
C-----------------------------------
C       READ FLOW FILES
C-----------------------------------
C
300     CONTINUE
        READ(3,3001,ERR=850) NQOPT,NOQ,SCALQ
3001    FORMAT(2I5/E10.4)
        IF(NOQ.LE.0) GO TO 400
```

```
        DO 380 K=1,NOQ
          READ(3,3003) JQ(K),IQ(K),NDAYS
3003      FORMAT(3I5)
          READ(3,3005) ((QT(K,N),XN),N=1,NDAYS)
3005      FORMAT(100(4(E10.3,F10.2)/))
          DO 375 N=1,NDAYS
            QT(K,N)=QT(K,N)*SCALQ*0.0846
375       CONTINUE
380     CONTINUE
400     CONTINUE
C
C-----------------------------------
C       READ FILES AND CONVERT
C-----------------------------------
C
        OPEN(UNIT=2,NAME='DAILY.DAT',TYPE='NEW',FORM='UNFORMATTED',
     .      ACCESS='SEQUENTIAL')
C
C
        WRITE(2) NOWK,NQOPT,NOQ,SCALQ
        IF(NOQ.GT.0) WRITE(2) ((JQ(K),IQ(K)),K=1,NOQ)
        N=0
700     CONTINUE
        N=N+1
        IF(NOWK.EQ.0) GO TO 710
          READ(1,FORMAT,ERR=800,END=900) ((LOADS(I,J),I=1,NOSYS),J=1,NOWK)
          WRITE(2) ((LOADS(I,J),I=1,NOSYS),J=1,NOWK)
710     CONTINUE
        IF(NOQ.GT.0) WRITE(2) (QT(K,N),K=1,NOQ)
        IF(N.GE.NDAYS) N=0
        NEND=N+NOWK
        IF(NEND.EQ.0) GO TO 900
        GO TO 700
C
C       READ ERROR
C
800     CONTINUE
        WRITE(5,*) 'ERROR IN LOAD INPUT FILE FORMAT - RUN ABORTED'
        GO TO 900
850     CONTINUE
        WRITE(5,*) 'ERROR IN FLOW INPUT FILE FORMAT - RUN ABORTED'
        GO TO 900
C
C       END OF INPUT
C
900     CONTINUE
        CLOSE (UNIT=1)
        CLOSE (UNIT=2)
        CLOSE (UNIT=3)
        STOP
        END
```

Appendix 3.7 Listing of HSPFCVT

```
C*************************************************************************
C
C                              PROGRAM HSPFCVT
C
C                                                          LAST REVISED 08/27/82
C*************************************************************************
C
C               CONVERTS AN HSPF PLOT FILE TO A WASP LOAD FILE
C
C*************************************************************************
      DIMENSION IWK(30),ACRES(30),FACTOR(10),LOAD(10),INLOAD(10)
      INTEGER YEAR,MONTH,DAY,DUR,BEGYR,BEGMO,BEGDA,ENDYR,ENDMO,ENDDA
      REAL INLOAD,LOAD
C
      WRITE(5,1005)
1005  FORMAT(1H1//////////////5X,'PLEASE ENTER ',
     .'NUMBER OF SYSTEMS AND NUMBER OF LOADING SEGMENTS'//////////)
      READ(5,*) NOSYS,NOWK
      DO 25 I=1,NOSYS
        WRITE(5,1021) I
1021    FORMAT(1HO/5X,'SYSTEM',I3,' MULTIPLICATION FACTOR = ')
        READ(5,*) FACTOR(I)
25    CONTINUE
      FACTOR(2)=FACTOR(2)*2000.
      WRITE(5,1026)
1026  FORMAT(1HO///5X,'FACTOR(2) HAS BEEN MULTIPLIED BY 2000',
     .       ' TO CONVERT TONS/ACRE TO LBS/ACRE'////)
      DO 50 K=1,NOWK
        WRITE(5,1031)
1031    FORMAT(1HO/5X,'SEGMENT NUMBER AND ACREAGE = ')
        READ(5,*) IWK(K),ACRES(K)
50    CONTINUE
      DO 75 I=1,28
        READ(4,1074) DUMMY
1074    FORMAT(80A1)
75    CONTINUE
      WRITE(5,1081)
1081  FORMAT(1HO///5X,'PLEASE ENTER BEGINNING YEAR, MONTH, AND DAY'/)
      READ(5,*) BEGYR,BEGMO,BEGDA
      WRITE(5,1083)
1083  FORMAT(1HO/5X,'NOW ENTER ENDING YEAR, MONTH AND DAY'/)
      READ(5,*) ENDYR,ENDMO,ENDDA
C
C
      NRECR=0
      NRECW=0
      ISTART=0
      IEND=0
100   CONTINUE
        READ(4,1100,END=300) ALPHA,YEAR,MONTH,DAY,DUR,IDUM,
```

```
     .                        (LOAD(I),I=1,NOSYS)
1100    FORMAT(A4,I6,4I3,3E14.5/5E14.5)
        NRECR=NRECR+1
        IF(ISTART.EQ.1) GO TO 105
          IF(YEAR.GE.BEGYR.AND.MONTH.GE.BEGMO.AND.DAY.GE.BEGDA) ISTART=1
          IF(ISTART.NE.1) GO TO 100
105     CONTINUE
        IF(YEAR.LT.ENDYR) GO TO 110
          IF(MONTH.LT.ENDMO) GO TO 110
            IF(DAY.GE.ENDDA) IEND=1
110     CONTINUE
        DO 120 K=1,NOWK
          DO 115 I=1,NOSYS
            INLOAD(I)=LOAD(I)*FACTOR(I)*ACRES(K)
            IF(INLOAD(I).LT.0.) INLOAD(I)=0.0
115       CONTINUE
          WRITE(6,1200) ALPHA,YEAR,MONTH,DAY,DUR,IWK(K),
     .                  (INLOAD(I),I=1,NOSYS)
1200      FORMAT(1X,A4,I6,4I3,3E14.5/5E14.5/5E14.5)
120     CONTINUE
        NRECW=NRECW+1
        IF(IEND.EQ.1) GO TO 300
      GO TO 100
300   CONTINUE
      WRITE(5,1110) NRECR,NRECW,NOWK
      WRITE(5,1120)
1110  FORMAT(1H1///////////////20X,'PROCESSING COMPLETE'/////
     .       15X,I5,' UNIT LOADS READ'/
     .       15X,I5,' SETS OF LOADS WRITTEN FOR EACH OF',I3,' SEGMENTS'/
     .       /////20X,'FORMAT IS 23X,3E14.5/5E14.5/5E14.5'/)
1120  FORMAT(1H0//20X,'TO CONVERT THESE LOADS TO WASP INPUT FORMAT,'/
     .       20X,'RUN "DAILYCVT" USING INTERMEDIATE FILE "WASPLD.DAT"'/)
      STOP
      END
```

Appendix 3.8 Listing of SWRVCVT

```
C*************************************************************************
C
C                              PROGRAM SWRVCVT
C
C                                                          LAST REVISED 03/15/82
C*************************************************************************
C
C               CONVERTS AN SWRV PLOT FILE TO A WASP LOAD FILE
C
C*************************************************************************
      DIMENSION IWK(30),ACRES(30),FACTOR(10),LOAD(10),INLOAD(10)
      INTEGER YEAR,MONTH,DAY,DUR,BEGYR,BEGMO,BEGDA,ENDYR,ENDMO,ENDDA
      REAL INLOAD,LOAD
C
      WRITE(5,1005)
1005  FORMAT(1H1//////////////5X,'PLEASE ENTER ',
     .'NUMBER OF SYSTEMS AND NUMBER OF LOADING SEGMENTS'//////////)
      READ(5,*) NOSYS,NOWK
      DO 25 I=1,NOSYS
        WRITE(5,1021) I
1021    FORMAT(1H0/5X,'SYSTEM',I3,' MULTIPLICATION FACTOR = ')
        READ(5,*) FACTOR(I)
25    CONTINUE
      FACTOR(2)=FACTOR(2)*2000.
      WRITE(5,1026)
1026  FORMAT(1H0///5X,'FACTOR(2) HAS BEEN MULTIPLIED BY 2000',
     .      ' TO CONVERT TONS/ACRE TO LBS/ACRE'////)
      DO 50 K=1,NOWK
        WRITE(5,1031)
1031    FORMAT(1H0/5X,'SEGMENT NUMBER AND ACREAGE = ')
        READ(5,*) IWK(K),ACRES(K)
50    CONTINUE
      DO 75 I=1,3
        READ(4,1074) DUMMY
1074    FORMAT(80A1)
75    CONTINUE
      WRITE(5,1081)
1081  FORMAT(1H0///5X,'PLEASE ENTER BEGINNING YEAR AND JULIAN DAY'/)
      READ(5,*) BEGYR,BEGDA
      WRITE(5,1083)
1083  FORMAT(1H0/5X,'NOW ENTER ENDING YEAR AND JULIAN DAY'/)
      READ(5,*) ENDYR,ENDDA
C
C
      NRECR=0
      NRECW=0
      ISTART=0
      IEND=0
```

```
100   CONTINUE
        READ(4,1100,END=300) ALPHA,YEAR,MONTH,DAY,DUR,IDUM,
     .                       (LOAD(I),I=1,NOSYS)
1100    FORMAT(A4,I6,4I3,2E14.5)
        NRECR=NRECR+1
        IF(ISTART.EQ.1) GO TO 105
          IF(YEAR.GE.BEGYR.AND.DAY.GE.BEGDA) ISTART=1
          IF(ISTART.NE.1) GO TO 100
105     CONTINUE
        IF(YEAR.LT.ENDYR) GO TO 110
          IF(DAY.GE.ENDDA) IEND=1
110     CONTINUE
        DO 120 K=1,NOWK
          DO 115 I=1,NOSYS
            INLOAD(I)=LOAD(I)*FACTOR(I)*ACRES(K)
            IF(LOAD(I).LE.0.00005) INLOAD(I)=0.0
115       CONTINUE
          WRITE(6,1200) ALPHA,YEAR,MONTH,DAY,DUR,IWK(K),
     .                  (INLOAD(I),I=1,NOSYS)
1200      FORMAT(1X,A4,I6,4I3,3E14.5/5E14.5/5E14.5)
120     CONTINUE
        NRECW=NRECW+1
        IF(IEND.EQ.1) GO TO 300
      GO TO 100
300   CONTINUE
      WRITE(5,1110) NRECR,NRECW,NOWK
      WRITE(5,1120)
1110  FORMAT(1H1///////////////20X,'PROCESSING COMPLETE'/////
     .       15X,I5,' UNIT LOADS READ'/
     .       15X,I5,' SETS OF LOADS WRITTEN FOR EACH OF',I3,' SEGMENTS'/
     .       /////20X,'FORMAT IS 23X,3E14.5/5E14.5/5E14.5'/)
1120  FORMAT(1H0//20X,'TO CONVERT THESE LOADS TO WASP INPUT FORMAT,'/
     .       20X,'RUN "DAILYCVT" USING INTERMEDIATE FILE "WASPLD.DAT"'/)
      STOP
      END
```

Appendix 3.9 Listing of USGSCVT

```
C*************************************************************************
C
C                              PROGRAM USGSCVT
C
C                                                          LAST REVISED 03/18/82
C*************************************************************************
C
C             CONVERTS A USGS FLOW FILE TO WASP "DAILY" FORMAT
C
C*************************************************************************
C
      VIRTUAL IQ(10),JQ(10),QT(10,1850),A(20)
C
      OPEN(UNIT=1,NAME='CSU.DAT',TYPE='OLD')
      OPEN(UNIT=2,NAME='WASPFL.DAT',TYPE='NEW')
C
      WRITE(5,7001)
7001  FORMAT(1H1//////////////////////////10X,'THIS PROGRAM WILL READ A',
     . ' USGS FLOW FILE,'/10X,'THEN COPY AND INTERPOLATE DAILY FLOWS',
     . ' FOR A WASP REACH'/)
      WRITE(5,7003)
7003  FORMAT(1H0/10X,'PLEASE ENTER THE NUMBER OF SEGMENTS IN THE ',
     .  'REACH'/)
      READ(5,*) NSEG
      WRITE(5,7005)
7005  FORMAT(1H /10X,'NOW ENTER A SCALE FACTOR TO MULTIPLY USGS FLOWS'/)
      READ(5,*) SCALQ
C
C        CALCULATE REACH PARAMETERS
C
      ICHK=0
      NOQ=NSEG+1
      NQI=NSEG-1
      XNQI=FLOAT(NQI)
      XNSEG=FLOAT(NSEG)
      IQOPT=1
      WRITE(5,7007)
7007  FORMAT(1H0/10X,'PLEASE ENTER ADJOINING SEGMENT PAIRS,FROM UP-',
     . ' TO DOWNSTREAM'/10X,'(BOUNDARIES ARE REPRESENTED BY A "0")'/)
      DO 5 I=1,NOQ
        WRITE(5,7009) I
7009    FORMAT(1H ,14X,'SEGMENTS IN PAIR',I3,' ARE :')
        READ(5,*) JQ(I),IQ(I)
5     CONTINUE
C
C        READ USGS FILE FOR POSITION
C
      WRITE(5,7011)
```

```
7011  FORMAT(1HO/10X,'WHAT YEAR AND MONTH DOES THE WASP FLOW RECORD',
     .  ' START?')
      READ(5,*) IYF,IMF
      WRITE(5,7013)
7013  FORMAT(1H ,9X,'WHAT YEAR AND MONTH DOES  THE WASP FLOW RECORD',
     .  'END?')
      READ(5,*) IYL,IML
      WRITE(5,7015)
7015  FORMAT(1H /10X,'WE WILL NOW SEARCH FOR THE FIRST STATION.')
C
10    CONTINUE
      READ(1,8001,END=99) A
8001  FORMAT(20A4)
      READ(1,8001,END=99) A
      WRITE(5,7022) A
7022  FORMAT(1H ,20X,'STATION DESCRIPTION :'/1X,20A4/10X,
     . 'IS THIS THE CORRECT STATION?'/15X,'1=YES, 2=NO, 3=QUIT')
      READ(5,*) NSTA
      GO TO (200,100,99) NSTA
C
99    CONTINUE
        WRITE(5,7023)
7023    FORMAT(1HO//10X,'END OF RECORD ENCOUNTERED... PROGRAM ENDS.')
        STOP
C
C        SEARCH FOR NEXT STATION IN FILE
100   CONTINUE
        READ(1,8007,END=99) TEST,YEAR
      IF(TEST.NE.0.OR.YEAR.NE.1826.) GO TO 100
      READ(1,8001,END=99) A
      GO TO 10
C
C        FOUND CORRECT STATION
200   CONTINUE
        WRITE(5,7025)
7025    FORMAT(1H /10X,'IS THIS THE UP- OR DOWNSTREAM STATION?'/
     .   10X,'1=UPSTREAM, 2=DOWNSTREAM'/)
        READ(5,*) NQ
        IF(NQ.GE.2) NQ=NOQ
C
C        LOCATE FIRST YEAR
210     CONTINUE
          READ(1,8007) TEST,YEAR
8007      FORMAT(F6.0,F4.0)
          IF(TEST.NE.0.) GO TO 210
          NYR=YEAR
          IF(NYR.EQ.1826) GO TO 10
          IF(NYR.LT.IYF) GO TO 210
          WRITE(5,7027) NYR
7027      FORMAT(1H ,19X,'YEAR',I5,' LOCATED')
```

```
C
C       LOCATE FIRST MONTH
          IF(IMF.EQ.1) GO TO 300
          MM1=IMF-1
220       CONTINUE
            READ(1,8009) MO,NDA
8009        FORMAT(I2,8X,I2)
            READ(1,8011) (Q,N=1,NDA)
8011        FORMAT(4(8F10.0/))
          IF(MO.LT.MM1) GO TO 220
          WRITE(5,7029) IMF
7029      FORMAT(1H ,9X,'FILE POSITIONED AT MONTH',I3)
C
C       READ AND STORE FLOW FILE
C
300   CONTINUE
      NDAYS=0
      IM1=IMF
      IM2=12
      IYR=IYF
310   CONTINUE
        IF(IYR.EQ.IYL) IM2=IML
        DO 325 IMO=IM1,IM2
          READ(1,8013) MO,NDA
8013      FORMAT(I2,8X,I2)
          MDAY=NDAYS+1
          NDAYS=NDAYS+NDA
          READ(1,8015) ((QT(NQ,N)),N=MDAY,NDAYS)
8015      FORMAT(4(8F10.0/))
325     CONTINUE
        IM1=1
        IYR=IYR+1
      IF(IYR.GT.IYL) GO TO 330
        READ(1,8001,END=99) A
        GO TO 310
330   CONTINUE
      IYR=IYR-1
      WRITE(5,7031) NQ,IMF,IYF,IM2,IYR
7031  FORMAT(1HO//10X,'FLOWS STORED FOR SEGMENT PAIR',I3,', FROM',
     . I3,'/',I4,' THROUGH',I3,'/',I4/)
      ICHK=ICHK+1
      IF(ICHK.GE.2) GO TO 400
      WRITE(5,7033)
7033  FORMAT(1HO/10X,'WE WILL NOW SEARCH FOR THE SECOND STATION.')
      GO TO 100
C
C       INTERPOLATE FLOWS FOR NETWORK
C
400   CONTINUE
      DO 450 N=1,NDAYS
```

```
        DELTQ=(QT(NOQ,N)-QT(1,N))/XNSEG
        DO 425 K=2,NSEG
          XK=FLOAT(K-1)
          QT(K,N)=QT(1,N) + XK*DELTQ
425     CONTINUE
450   CONTINUE
C
C       WRITE FLOWS IN WASP FORMAT
C
      WRITE(2,3001) IQOPT,NOQ,SCALQ
3001  FORMAT(1H ,I4,I5/E10.4)
      DO 500 K=1,NOQ
        WRITE(2,3003) JQ(K),IQ(K),NDAYS
3003    FORMAT(1H ,I4,2I5)
        WRITE(2,3005) ((QT(K,N),FLOAT(N-1)),N=1,NDAYS)
3005    FORMAT(100(4(1X,E9.4,F9.2,1X)/))
500   CONTINUE
      WRITE(5,7035)
7035  FORMAT(1H0//10X,'FLOWS SUCCESSFULLY WRITTEN TO WASP FLOW FILE.')
      STOP
      END

PDS>
```

APENDIX 4:
Listing of Input Data File

```
   1    1    3    4    2    0    0                          A: MODEL OPTIONS

           TEST POND  DIBENZOTHIOPHENE RUN
TIME VARIABLE SIMULATION
   0 0
   4    3                                                   B: EXCHANGE COEFF

 2.78
 2.847E-05  107638.  .164 .164   1   2 0.000E-05  107638.  .164 .082   2   3
 0.000E-05  107638.  .082 .082   3   4
 0 0
   1    4                                                        C: VOLUMES
    1.E-6
  714285.    17857.    8928.5    8928.5
   2    2                                                         D: FLOWS
      1.0
     0.10    0    1      0.10    1    0
   2
      1.0         0       1.0      1200
 0 0

   2    1                                                        E: BOUNDARIES
      1.0
     0.00    1
   2
      1.0         0        1.0     1200
   2    1
      1.0
    2000.    1
   2
      1.0         0        1.0     1200
   1    1                                              F: FORCING FUNCTIONS
      0.1
   0.0804    1
   1    1
      1.0
       0.    1
  18                                                   G: SEGMENT PARAMETERS

      1.0       1.0       1.0       1.0       1.0       1.0       1.0       1.0
      1.0       1.0       1.0       1.0       1.0       1.0       1.0       1.0
```

```
      1.0       1.0
TEMPM      15.0DEPTH      6.56VELOC      0.00WINDS       0.7TYPEE       1.0
BACTO     1.E05ACBAC       1.0BIOMS      12.9BIOTM      15.0 POHG       6.0
OXRAD     1.E-9  OCS      0.01PCTWA      1.37DSPSD       0.0  PHG       8.0
   WS     2.00 CMPET       2.0TOTKG   .000000
TEMPM      15.0DEPTH     0.164VELOC       0.0WINDS       0.0TYPEE       3.0
BACTO     2.E07ACBAC       1.0BIOMS      50.0BIOTM      15.0 POHG       8.0
OXRAD       1.0  OCS      0.01PCTWA      1.37DSPSD       1.0  PHG       6.0
SCOUR       0.5CMPET       2.0TOTKG   .000000
TEMPM      15.0DEPTH     0.082VELOC       0.0WINDS       0.0TYPEE       4.0
BACTO     2.E06ACBAC       1.0BIOMS       1.0BIOTM      15.0 POHG       8.0
OXRAD       0.0  OCS      0.01PCTWA      1.10DSPSD            PHG       6.0
 PERC      0.00CMPET       2.0TOTKG   .000000
TEMPM      15.0DEPTH     0.082VELOC       0.0WINDS       0.0TYPEE       4.0
BACTO     2.E05ACBAC       1.0BIOMS       0.1BIOTM      15.0 POHG       8.0
OXRAD       0.0  OCS      0.01PCTWA      1.10DSPSD            PHG       6.0
 PERC      0.00CMPET       2.0TOTKG   .000000
   66                                                          H: CONSTANTS
EBHG1      00.0EBHG2       0.0EBHG3      0.00ENHG1      0.00ENHG2       0.0
ENHG3       0.0EAHG1       0.0EAHG2       0.0EAHG3       0.0KAHG1       0.0
KAHG2       0.0KAHG3       0.0KBHG1     00.00KBHG2       0.0KBHG3       0.0
KNHG1     00.00KNHG2       0.0KNHG3       0.0EOXG1       0.0EOXG2       0.0
EOXG3       0.0KOXG1     0.000KOXG2      0.00KOXG3      0.00KBWG1     5.3E-7
KBWG2       0.0KBWG3       0.0QTBW1       2.0QTBW2       2.0QTBW3       2.0
KBSG1    5.3E-5KBSG2       0.0KBSG3       0.0QTBS1       2.0QTBS2       0.0
QTBS3     0.000  KOC  1.38E+05  KOW       0.0  OCB  0.003715DUMMY
DUMMY       0.0DUMMY            MWTG     184.3HENRY      0.00VAPRG     0.002
KVOG        0.0 SOLG      1.11ESOLG       0.0EVPRG     00.00EHENG       0.0
DUMMY           DUMMY             FAC       0.1KDPG      0.732RFLAT      40.0
CLOUD      4.00 LATG      40.0DFACG      1.19QUAN1    5.E-04QUAN2       0.0
QUAN3       0.0 XJTR       0.0CTRIG      0.00DTOPT       0.0TDINT       20.
 LOPT       0.0
    5                                                          I: TIME FUNCTIONS
TEMPN    2
      1.00       .000       1.00      5000.
WINDN    2
      1.00       .000       1.00      5000.
  PHN    2
      1.00       .000       1.00      5000.
 POHN    2
      1.00       .000       1.00      5000.
LIGHT    2
      1.00       .000       1.00      5000.
CHEM   0.002217   2:     0.000   3: 0.0000      4: 0.00500   J: INITIAL CONC.
 SED       200.   2: 1350400.0   3: 2000000.0   4: 2000000.0
      00.  3000000.                                        K: STABILITY
       0.         0.         0.         0.
      20.                                              L: INT. PRINT CONTROL
  1  1  1  2  1  3  1  4  2  1  2  2  2  3  2  4
 2 0                                                   M: INTEGRATION CONTROL
      1.0     000.0
   2
```

```
     0.25         1.      0.25     800.0        0.5     6400.
 CHEM   CHEM1    CHEMS    CHEMB    DISSF     SEDF     MASS    BMASS    N:DISPLAY TABL
  1   1   2   3   4
  2   1   2   3   4
  3   1   2   3   4
  4   1   2   3   4
  5   1   2   3   4
  6   1   2   3   4
  7   1   2   3   4
  8   1   2   3   4

SED       DEPTH    TOTKL   PHOTKL    HYDRKL BIOLKL  OXIDKL    VOLKL
  1   1   2   3   4
  2   1   2   3   4
  3   1   2   3   4
  4   1   2   3   4
  6   1   2   3   4
  8   1   2   3   4

 4 1                                                    N: DISPLAY PRINTER PLOTS
        0.      0.01
  1   2   3   4
 4 1
        0.       0.1
  1   2   3   4
 4 1
        0.       0.5
  1   2   3   4
 4 1
        0.      10.0
  1   2   3   4
 4 3
        0.      10.0
  1   2   3   4
 4 4
        0.      10.0
  1   2   3   4
 4 7
        0.      100.
  1   2   3   4
 4 7
        0.       10.
  1   2   3   4
 4 8
        0.      100.
  1   2   3   4
 4 8
        0.       10.
  1   2   3   4

 1 1
        0. 1500000.0
```

```
 1
3 1
        0. 4000000.0
 2  3  4
1 2
        0.        10.0
 1
3 2
        0.        1.0
 2  3  4
4 3
        0.        1.0
 1  2  3  4
4 3
        0.        0.1
 1  2  3  4
4 3
        0.        .01
 1  2  3  4
4 3
        0.       .001
 1  2  3  4
4 6
        0.       .05
 1  2  3  4
1 8
      0.0       0.01
 1
```

END OF N CARD GROUP