United States
Environmental Protection
Agency

Industrial Environmental
Research Laboratory
Cincinnati OH 45268

EPA-600/2-78-004c
March 1978 C. 2

Research and Development

EPA

Source Assessment: Plastics Processing, State of the Art

Environmental Protection Technology Series

RESEARCH REPORTING SERIES

Research reports of the Office of Research and Development, U S. Environmental Protection Agency, have been grouped into nine series These nine broad categories were established to facilitate further development and application of environmental technology Elimination of traditional grouping was consciously planned to foster technology transfer and a maximum interface in related fields The nine series are

1 Environmental Health Effects Research
2. Environmental Protection Technology
3 Ecological Research
4 Environmental Monitoring
5 Socioeconomic Environmental Studies
6 Scientific and Technical Assessment Reports (STAR)
7 Interagency Energy-Environment Research and Development
8 "Special" Reports
9 Miscellaneous Reports

This report has been assigned to the ENVIRONMENTAL PROTECTION TECHNOLOGY series This series describes research performed to develop and demonstrate instrumentation, equipment, and methodology to repair or prevent environmental degradation from point and non-point sources of pollution This work provides the new or improved technology required for the control and treatment of pollution sources to meet environmental quality standards.

This document is available to the public through the National Technical Information Service, Springfield, Virginia 22161.

EPA-600/2-78-004c
March 1978

SOURCE ASSESSMENT:
PLASTICS PROCESSING
State of the Art

by

T. W. Hughes, R. F. Boland, and G. M. Rinaldi
Monsanto Research Corporation
Dayton, Ohio 45407

Contract No. 68-02-1874

Project Office

Ronald J. Turner
Industrial Pollution Control Division
Industrial Environmental Research Laboratory
Cincinnati, Ohio 45268

INDUSTRIAL ENVIRONMENTAL RESEARCH LABORATORY
OFFICE OF RESEARCH AND DEVELOPMENT
U.S. ENVIRONMENTAL PROTECTION AGENCY
CINCINNATI, OHIO 45268

U.S. Environmental Protection Agency
Region 5, Library (PL-12J)
77 West Jackson Boulevard, 12th Floor
Chicago, IL 60604-3590

DISCLAIMER

This report has been reviewed by the Industrial Environmental Research Laboratory-Cincinnati, U.S. Environmental Protection Agency, and approved for publication. Approval does not signify that the contents necessarily reflect the views and policies of the U.S. Environmental Protection Agency, nor does mention of trade names or commercial products constitute endorsement or recommendation for use.

FOREWORD

When energy and material resources are extracted, processed, converted, and used, the related pollutional impacts on our environment and even on our health often require that new and increasingly more efficient pollution control methods be used. The Industrial Environmental Research Laboratory - Cincinnati (IERL-Ci) assists in developing and demonstrating new and improved methodologies that will meet these needs both efficiently and economically.

This report contains an assessment of air emissions from the plastics processing industry. This study was conducted to provide a better understanding of the distribution and characteristics of emissions from plastics processing operations. Further information on this subject may be obtained from the Organic Chemicals and Products Branch, Industrial Pollution Control Division.

David G. Stephan
Director
Industrial Environmental Research Laboratory
Cincinnati

PREFACE

The Industrial Environmental Research Laboratory (IERL) of the U.S. Environmental Protection Agency (EPA) has the responsibility for insuring that pollution control technology is available for stationary sources to meet the requirements of the Clean Air Act, the Federal Water Pollution Control Act, and solid waste legislation. If control technology is unavailable, inadequate, or uneconomical, then financial support is provided for the development of the needed control techniques for industrial and extractive process industries. Approaches considered include: process modifications, feedstock modifications, add-on control devices, and complete process substitution. The scale of the control technology programs ranges from bench- to full-scale demonstration plants.

IERL has the responsibility for developing control technology for a large number of operations (more than 500) in the chemical and related industries. As in any technical program, the first step is to identify the unsolved problems. Each of the industries is to be examined in detail to determine if there is sufficient potential environmental risk to justify the development of control technology by IERL.

Monsanto Research Corporation (MRC) has contracted with EPA to investigate the environmental impact of various industries that represent sources of pollutants in accordance with EPA's responsibility, as outlined above. Dr. Robert C. Binning serves as MRC Program Manager in this overall program, entitled "Source Assessment," which includes the investigation of sources in each of four categories: combustion, organic materials, inorganic materials, and open sources. Dr. Dale A. Denny of the Industrial Processes Division at Research Triangle Park serves as EPA Project Officer for this series. Reports prepared in this program are of two types: Source Assessment Documents, and State-of-the-Art Reports.

Source Assessment Documents contain data on pollutants from specific industries. Such data are gathered from the literature, government agencies, and cooperating companies. Sampling and analysis are also performed by the contractor when the available information does not adequately characterize the source pollutants. These documents contain all of the information necessary for IERL to decide whether a need exists to develop additional control technology for specific industries.

State-of-the-Art Reports include data on pollutants from specific industries which are also gathered from the literature, government agencies and cooperating companies. However, no extensive sampling is conducted by the contractor for such industries. Results from such studies are published as State-of-the-Art Reports for potential utility by the government, industry, and others having specific needs and interests.

This State-of-the-Art Report contains data on air emissions from plastics processing. This project was initiated by the Chemical Processes Branch of the Industrial Processes Division at Research Triangle Park; Mr. Kenneth Baker served as EPA Project Leader. The project was transferred to and completed by the Industrial Pollution Control Division, IERL-Cincinnati, in October 1975; Mr. Ronald J. Turner of the Organic Chemicals and Products Branch served as EPA Project Leader from that time through completion of the study.

ABSTRACT

This document reviews the state of the art of air emissions from plants that manufacture marketable products via plastics processing. The composition, quantity, and rate of emissions are described.

The plastics processing industry in the United States produced 1.19×10^7 metric tons of finished goods in 1976 using the following types of plastics: acrylic, cellulosic, epoxy, nylon, phenolic, polyacetal, polycarbonate, polyester, high-density polyethylene, low-density polyethylene, polypropylene, polyester and styrene copolymers, polyurethane, polyvinyl chloride and copolymers, reinforced thermoplastics, and urea and melamine. These polymers were converted into fabricated plastic products, film, sheet, rod, tube, nontextile monofilaments, and regenerated cellulose products.

To assess the severity of emissions from this industry, 16 representative plants (1 plant for each plastic type) were defined based on the results of this study. Source severity was defined as the ratio of the time-averaged maximum ground level concentration of a pollutant to the primary ambient air quality standard for criteria pollutants. For representative plants converting 3,330 metric tons of a particular resin into the appropriate product, the hydrocarbon source severities ranged from 4.2 to 98 for polyacetal and polyurethane plastic types, respectively, and the particulate source severities ranged from 0.94 for 12 different plastic types to 11 for polyester.

The mass emissions from plastics processing in 1981 are expected to be 54% greater than 1976 emissions if no further implementation of existing control technology occurs. Plastics processing contributes 2.8% of the national hydrocarbon emissions and 0.12% of the national particulate emissions. On a state basis, plastics processing contributes from 0.04% to 8.96% of the hydrocarbon emissions and from 0.00% to 2.59% of the particulate emissions, depending on which state is considered.

Control technology which is currently available and potentially applicable to plastics processing plants can be divided into controls for hydrocarbons and for particulates. Hydrocarbon control technology includes adsorption, absorption, incineration, and condensation. Particulate control technology consists of wet scrubbers, fabric filters, and mist eliminators.

This report was submitted in partial fulfillment of Contract No. 68-02-1874 by Monsanto Research Corporation under the sponsorship of the U.S. Environmental Protection Agency. This report covers the period December 1974 to July 1977, and the work was completed as of July 1977.

CONTENTS

Foreword. iii
Preface iv
Abstract. vi
Figures xi
Tables. xii
Abbreviations and Symbols xiii
Conversion Factors and Metric Prefixes. xv

1. Introduction 1
2. Summary. 2
3. Source Description 7
   Source definition 7
   Geographical distribution 23
4. Emissions. 27
   Selected pollutants and their characteristics . . .27
   Emission factors. 27
   Definition of a representative source 29
   Source severity 29
5. Control Technology 36
   Hydrocarbons. 36
   Particulate 44
6. Growth and Nature of the Industry. 52
   Acrylic 54
   Cellulosic. 54
   Epoxy 54
   Nylon 54
   Phenolic. 56
   Polyacetal. 56
   Polycarbonate 56
   Polyester 56
   Polyethylene. 57
   Polypropylene 57
   Polystyrene and styrene copolymers. 57
   Polyurethane foam 57
   Polyvinyl chloride and copolymers 58
   Reinforced thermoplastics 58
   Urea and melamine 58

References. 59
Appendices

A. Consumption and processing data for plastic resins . . .64
B. Derivation of source severity equations. 73

CONTENTS (continued)

C. Input data and output from affected population calculations. 85
D. Sample calculations. 86

Glossary. 88

FIGURES

Number		Page
1	Dip-coating line.	17
2	Knife-over-roll coating	17
3	Reverse-roll coating.	17
4	A typical single-stage, single-screw extruder for plastics.	18
5	Production of plastic film by slot-die extrusion. .	19
6	Production of plastic film by circular-die extrusion	19
7	Schematic diagram of impregnation and drying operations in laminated plastics production . . .	21
8	Schematic diagram of a plunger-type injection-molding machine	23
9	Basic transfer mold operation	24
10	Geographical distribution of plastics processing plants.	26
11	Carbon adsorption system.	39
12	Catalytic afterburner	42
13	Centrifugal spray scrubbers	46
14	Impingement plate scrubber.	46
15	Venturi scrubber.	47
16	Packed scrubbers.	48
17	Wet-fiber mist eliminator	51
18	Projected growth of plastics consumption.	55

TABLES

Number		Page
1	Processing of Plastics.	3
2	Emission Factors and Annual Mass of Emissions from Plastics Processing	4
3	Source Severities for Criteria Pollutants Emitted from 16 Representative Plastics Processing Plants	5
4	Geographical Distribution of Plastics Processing. .	25
5	Total Hydrocarbon and Total Particulate Emission Factors for Plastics Processing	28
6	Maximum Ground Level Concentrations for Materials Emitted from Plastics Processing.	30
7	Source Severities for Plastics Processing	31
8	National Masses of Hydrocarbon Emissions from Plastics Processing	33
9	National Masses of Particulate Emissions from Plastics Processing	33
10	State Masses of Emissions from Plastics Processing.	34
11	Populations Exposed to Plastics Processing Emissions for Which $\overline{\chi}/F \geq 1$	35
12	Plastics Consumption and Estimated Growth	53

ABBREVIATIONS AND SYMBOLS

A	-- area affected by source severity greater than 1.0
AAQS	-- primary ambient air quality standard
a, b, c, c_1, c_2, c_3, d, d_1, d_2, d_3, f, f_1, f_2, f_3	-- constants used in estimating horizontal or vertical dispersion
AEROS	-- Aerometric and Emissions Reporting System
A_R	-- term equated to $Q/ac\pi u$
B_R	-- term equated to $-H^2/2\ c^2$
CO	-- carbon monoxide
D_P	-- affected population density
e	-- 2.72
$\overline{EF}$	-- "overall" emission factor
EF_i	-- product of emission factor and fraction of plastic processed per process operation
F	-- health hazard factor
F_i	-- fraction of plastic processed per process operation or handling method
h	-- average emission height
H	-- height of emission release
HDPE	-- high-density polyethylene
HMDA	-- hexamethylene-diamine
i	-- process operation or handling method in a series or summation
LDPE	-- low-density polyethylene
n	-- number of molecules
NEDS	-- National Emissions Data System
NO_x	-- nitrogen oxides
P'	-- total affected population
PP	-- polypropylene

ABBREVIATIONS AND SYMBOLS (continued)

ppm	-- parts per million
Q	-- mass emission rate
R, R'	-- aromatic or aliphatic hydrocarbon group
S	-- source severity
SO_x	-- sulfur oxides
t	-- time-averaging period for criteria pollutants
TDI	-- toluene diisobyanate
t_o	-- short-term averaging time
u	-- wind speed
$\bar{u}$	-- average wind speed
VCM	-- vinyl chloride monomer
x	-- downwind emission dispersion distance from source of release
x_{max}	-- distance where maximum concentration occurs
y	-- horizontal distance from centerline of dispersion
σ_y	-- standard deviation of horizontal dispersion
σ_z	-- standard deviation of vertical dispersion
χ	-- downwind ground level concentration at reference coordinate x and y with emission height of H
$\bar{\chi}$	-- time-averaged concentration
χ_{max}	-- maximum ground level concentration
$\bar{\chi}_{max}$	-- time-averaged maximum ground level concentration

CONVERSION FACTORS AND METRIC PREFIXES[a]

CONVERSION FACTORS

To convert from	To	Multiply by
Degree Celsius (°C)	Degree Fahrenheit	$t_F^\circ = 1.8\ t_C^\circ + 32$
Gram/second (g/s)	Pound/hr	7.937
Kilogram (kg)	Pound-mass (avoirdupois)	2.205
Kilometer^2 (km^2)	Mile^2	2.591
Meter (m)	Foot	3.281
Meter^2 (m^2)	Foot^2	1.076×10^1
Meter^3 (m^3)	Foot^3	3.531×10^1
Metric ton	Pound-mass	2.205×10^3
Metric ton	Kilogram	1.000×10^3
Metric ton	Ton (short, 2,000 pound mass)	1.585×10^{-4}
Pascal (Pa)	Pound-force/inch^2 (psi)	1.450×10^{-4}

METRIC PREFIXES

Prefix	Symbol	Multiplication factor	Example
Mega	M	10^6	1 MJ = 1×10^6 joules
Micro	μ	10^{-6}	1 g = 1×10^{-6} gram
Milli	m	10^{-3}	1 mg = 1×10^{-3} gram
Kilo	k	10^3	1 kPa = 1×10^3 pascals

[a]Metric Practice Guide. ASTM Designation E 380-74, American Society for Testing and Materials, Philadelphia, Pennsylvania, November 1974. 34 pp.

SECTION 1

INTRODUCTION

Plastics processing operations are performed on polymeric materials or systems to increase their utility. These operations involve chemical reactions, forming or shaping due to flow characteristics, and/or permanent changes in physical characteristics. The products of plastics processing are: adhesives, coatings, extruded goods, film and sheet, foams, laminates, and molded goods. Excluded from plastics processing are the operations performed in the manufacture of polymers or resins.

This document evaluates the environmental impact of atmospheric emissions from plants that manufacture marketable products via plastics processing. Sources of information used were trade journals, reference books, government reports, and personal communications with industry contacts. Section 2 summarizes the major results of this assessment of plastics processing. A detailed description of the raw materials and the production methods used by the industry is given in Section 3, along with a geographical distribution of plant sites and plastics consumption. The amounts and effects of uncontrolled atmospheric emissions from 16 representative plastics processing plants are quantified in Section 4. Control technology potentially applicable to these emissions is considered in Section 5. Consumption trends in the plastics processing industry are analyzed in Section 6. Appendix A presents 1976 consumption and processing data for each of the 16 plastic types considered in this study. Appendix B provides detailed derivations of equations used to calculate the severity of a point source of air pollution. Appendix C is a listing of input data and output from calculations of the number of people affected by potentially hazardous concentrations of materials emitted from the representative plastics processing plants. Sample calculations are outlined in Appendix D.

SECTION 2

SUMMARY

The plastics processing industry in the United States produced 1.19×10^7 metric tons[a] of finished goods in 1976 using the following types of plastics: acrylic, cellulosic, epoxy, nylon, phenolic, polyacetal, polycarbonate, polyester, high-density polyethylene, low-density polyethylene, polypropylene, polystyrene and styrene copolymers, polyurethane, polyvinyl chloride and copolymers, reinforced thermoplastics, and urea and melamine. These polymers were converted into fabricated plastics products, film, sheet, rod, tube, nontextile monofilaments, and regenerated cellulose products.

In 1972, there were 7,698 plastics processing plants in the United States. The majority of these plants are located in the following industrialized states: California, Illinois, Indiana, Massachusetts, Michigan, New Jersey, New York, Ohio, Pennsylvania, and Texas. Together, these 10 states account for more than 67% of the nation's plastics processing capacity.

Raw materials consumed in plastics processing plants consist of plastic resins, chemicals, and additives. Chemicals and additives include antioxidants, antistatic agents, catalysts, colorants, fillers, flame retardants, lubricants, organic peroxides, plasticizers, solvents, stabilizers, and ultraviolet absorbers. These materials are blended together and converted into final products as a result of chemical reactions (e.g., cross-linking), application of heat and pressure (e.g., extrusion or molding), or changes in physical characteristics (e.g., foam generation).

Seven process operations are performed in plastics processing plants: adhesives production, coating, extrusion, film and sheet production, foam generation, lamination, and molding. These operations convert raw resins into marketable items, such as plastic bottles, meat packaging wrap, pipe and tubing, foam mattresses, upholstery, and pleasure boat hulls. The processing methods used for 16 different plastics in 1976 are presented in Table 1, together with the domestic consumption of each type of plastic.

---

[a] 1 metric ton equals 10^3 kilograms, which equals 2,205 pounds; conversion factors and metric prefixes are provided in the prefatory pages.

TABLE 1. PROCESSING OF PLASTICS

Plastic type	1976 Domestic consumption, 10^3 metric tons	Process operation used, % by weight of plastic consumed [a,b]						
		Adhesives	Coating	Extrusion	Film and Sheet	Foam	Lamination	Molding
Acrylic	222		28.1	18.9	34.1			18.9
Cellulosic	70			6.0	53.7			40.3
Epoxy	100	9.1	59.1	10.2	5.5		8.0	8.2
Nylon	88			17.2	14.2			68.6
Phenolic	590	59.2	2.1				7.9	30.9
Polyacetal	39			15.5	7.9			76.6
Polycarbonate	51				5.2			94.8
Polyester[c]	691		0.9	30.9	1.3			66.9
High-density polyethylene	1,250			17.7	6.7			75.6
Low-density polyethylene	2,390			18.9	68.1			13.0
Polypropylene	1,010			43.0	8.9			48.1
Polystyrene and styrene copolymers	2,110		11.9	23.3		14.2		50.6
Polyurethane	753	0.1	0.7	0.2	0.2	98.1		0.8
Polyvinyl chloride and copolymers	2,030		2.9	45.0	23.9	1.1	0.8	26.3
Reinforced thermoplastics	69							100
Urea and melamine	439	73.5	16.7					9.8
TOTAL	11,900	5.7	4.4	23.5	20.5	8.9	0.6	36.3

[a]Totals may not add due to independent rounding.

[b]Blanks indicate that the plastic is not processed via the indicated unit operation.

[c]Includes reinforced polyesters.

The types of emission sources to be found in a plastics processing plant are listed below:

- Storage
- Conveying
- Pretreatment
  - Dry blending
  - Hot roll mixing
- Grinding
- Processing
  - Adhesives production
  - Coating
  - Extrusion
  - Film and sheet production
  - Foam generation
  - Lamination
  - Molding

Materials emitted to the atmosphere include particulates and hydrocarbons. The particulates are resin powders, solid additives, and hydrocarbon aerosols. Hydrocarbons consist of blowing agents, monomers, dimers, solvents, and additives introduced during processing.

Emission factors (assuming no control) for the handling methods and the unit operations of plastics processing and the annual mass of emissions from each of these operations are summarized in Table 2.

TABLE 2. EMISSION FACTORS AND ANNUAL MASS OF EMISSIONS FROM PLASTICS PROCESSING

Handling method or process operation	Hydrocarbons		Particulates	
	Emission factor (no control), g/kg	Mass of emissions, 10^3 metric tons/year	Emission factor (no control), g/kg	Mass of emissions, 10^3 metric tons/year
Storage			2.8	33
Conveying			0.9	11
Dry blending			15	31
Hot roll mixing			9	18
Grinding			34	12
Adhesives production	25	17		
Coating	55	29		
Extrusion	48	125		
Film and sheet production	20	48		
Foam generation	120	172		
Lamination	41	2.9		
Molding[a]	20	67	75	52

[a]Particulate emissions were taken from data for thermosetting plastics; hydrocarbon emissions were taken from data for both thermosetting plastics and thermoplastics.

Several evaluation parameters were used to determine the environmental impact of atmospheric emissions from plastics processing. The first parameter, source severity, S, relates the time-averaged maximum ground level concentration, $\overline{\chi}_{max}$, to a health hazard factor, F, as follows:

$$S = \frac{\overline{\chi}_{max}}{F} \qquad (1)$$

For this equation, $\overline{\chi}_{max}$ is calculated according to Gaussian plume dispersion theory, and F is defined as the primary ambient air quality standard (AAQS) for criteria pollutants [hydrocarbons,[a] particulates, sulfur oxides (SO_x), nitrogen oxides (NO_x), and carbon monoxide (CO)]. For the purpose of determining source severities, a representative plastics processing plant is defined to be one which annually converts 3,330 metric tons of a particular resin into the appropriate distribution of products listed in Table 1. Table 3 shows the source severity values for the 2 criteria pollutants, hydrocarbons and particulates, emitted from 16 representative plastic processing plants.

TABLE 3. SOURCE SEVERITIES FOR CRITERIA POLLUTANTS EMITTED FROM 16 REPRESENTATIVE PLASTICS PROCESSING PLANTS

	Hydrocarbons		Particulates	
Plastic type	$\overline{\chi}_{max}$, g/m^3	S	$\overline{\chi}_{max}$, g/m^3	S
Acrylic	0.0023	14	0.00024	0.94
Cellulosic	0.0019	12	0.00024	0.94
Epoxy	0.0034	21	0.00024	0.94
Nylon	0.0015	9.5	0.00024	0.94
Phenolic	0.0027	14	0.0014	5.5
Polyacetal	0.0007	4.2	0.00024	0.94
Polycarbonate	0.0023	14	0.00024	0.94
Polyester	0.0021	13	0.0028	11
High-density polyethylene	0.0012	7.7	0.00024	0.94
Low-density polyethylene	0.0017	11	0.00024	0.94
Polypropylene	0.0024	15	0.00024	0.94
Polystyrene & styrene copolymers	0.0017	10	0.00024	0.94
Polyurethane	0.016	98	0.00024	0.94
Polyvinyl chloride & copolymers	0.0028	17	0.0015	5.8
Reinforced thermoplastics	0.0014	9.0	0.00024	0.94
Urea and melamine	0.0022	14	0.00063	2.4

[a]There is no primary ambient air quality standard for hydrocarbons. The EPA has published a recommended guideline for meeting the primary ambient air quality standard for photochemical oxidants.

The second and third evaluation parameters relate the contributions of a specific pollutant from plastic processing plants to the total emissions of that pollutant on a national and on a state basis, respectively. In this regard, plastics processing contributes 2.8% of the hydrocarbon emissions and 0.12% of the particulate emissions nationwide. On a state basis, plastics processing contributes from 0.04% to 8.96% of the hydrocarbon emissions and from 0.00% to 2.59% of the particulate emissions, depending on which state is considered.

The fourth evaluation parameter is an estimate of the number of people exposed to the emissions from a representative plastics processing plant. The population affected by the emissions from plastics processing ranges from 11 persons to 326 persons for hydrocarbons and from 2 persons to 46 persons for particulates.

The fifth evaluation parameter is an estimate of the increase in the mass of emissions over the 5-yr period 1976 to 1981. The mass of emissions from plastics processing in 1981 is expected to be 54% greater than the 1976 value if no further implementation of existing control technology occurs.

Control technology which is currently available and potentially applicable to plastics processing plants can be divided into controls for hydrocarbons and for particulates. Hydrocarbon control technology includes adsorption, absorption, incineration, and condensation. Particulate control technology consists of wet scrubbers, fabric filters, and mist eliminators.

SECTION 3

SOURCE DESCRIPTION

SOURCE DEFINITION

Plastics processing is a type of polymer processing which involves the use of various unit operations to mold, form, shape, and otherwise alter plastic materials in order to increase their utility. Bernhardt and McKelvey (1) have defined polymer processing as "...an engineering specialty concerned with operations carried out on polymeric materials or systems to increase their utility. These operations produce one or more of the following effects: chemical reaction, flow, or a permanent change in a physical property. Specifically excluded are the chemical reactions involved in the manufacture of resins."

Types of Products

Plastics processing operations are performed in establishments mainly engaged in molding primary plastics for the industry and fabricating miscellaneous finished plastics products. Plants that manufacture fabricated plastics products or plastics film, sheet, rod, tube, nontextile monofilaments, and regenerated cellulose products are included in this industry. The resins used in these plants are either purchased or manufactured on site. This industry, which includes establishments engaged in compounding purchased resins, has been defined by the U.S. Department of Commerce as "Miscellaneous Plastics Products" and assigned Standard Industrial Classification 3079 (2).

Materials Processed

The materials handled in plastics processing plants include thermoplastics, thermosetting resins, and foams. Each of 16 different resin types is discussed below. 1976 consumption and processing data for these resins are presented in Appendix A.

---

(1) Bernhardt, E. C., and J. M. McKelvey. Polymer Processing-New Engineering Specialty. Modern Plastics, 35 (10):44-45, 1958.

(2) 1972 Census of Manufactures, Volume II-Industry Statistics, Part 2-SIC Major Groups 27-34. U.S. Department of Commerce, Washington, D.C., August 1976. pp. 30A-1 through 30A-14.

Acrylic Resins--
Acrylic resins are produced from methyl methacrylate, ethyl acrylate, n-butyl acrylate, and isobutyl acrylate. The thermoplastic polymers are synthesized via radical chain polymerization using an organic peroxide catalyst. The polymerization reaction for poly (methyl methacrylate) is

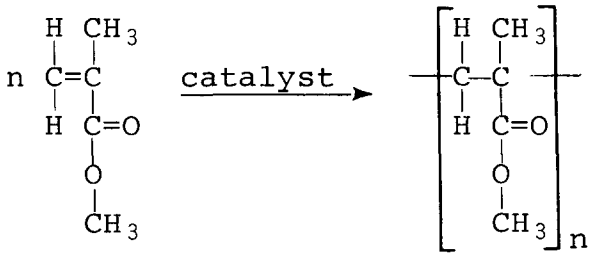

(2)

Cellulosic Resins--
Cellulose acetate, cellulose butyrate, cellulose propionate, cellulose nitrate, and cellulose triacetate are manufactured by the esterification of cellulose, a natural polyhydric alcohol. Cellulosic thermoplastics are not homogeneous because they consist of a mixture of mono-, di-, and tri-substituted cellulose esters (3).

In the synthesis of cellulosics, acids are used which correspond to the cellulose derivative, i.e., acetic acid, butyric acid, propionic acid, and nitric acid. The ester may be formed by reaction of the acid anhydride or acid chloride with cellulose. Sulfuric acid is also used in commercial practice as a catalyst for the esterification (4). To drive these reactions to completion, water must be removed, usually by azeotropic distillation.

Epoxy Resins--
Thermosetting epoxy resins are the reaction products of glycidyl compounds and epoxidized olefins. Glycidyl compounds are produced by reacting epichlorohydrin with active hydrogen compounds such as bisphenol A. Epoxidized olefins are produced by reacting peracids or peroxides with either linear or cyclic olefin compounds.

Epoxy resins are produced in unmodified and modified forms. Four types of unmodified epoxy resins are manufactured: epichlorohydrin-bisphenol A resins, cycloaliphatic resins, novolac resins, and phenoxy resins. Epichlorohydrin-bisphenol A resins account

---

(3) Ott E. Cellulose and Cellulose Derivatives. John Wiley and Sons, Inc., New York, New York, 1955. 1601 pp.

(4) Travis, G. Cellulosic. Modern Plastics, 50(10A):34-36, 1973.

for approximately 90% of the total consumption of epoxies (5). By varying both the ratio of epichlorohydrin to bisphenol A and the operating conditions, resins having the following general structure are formed:

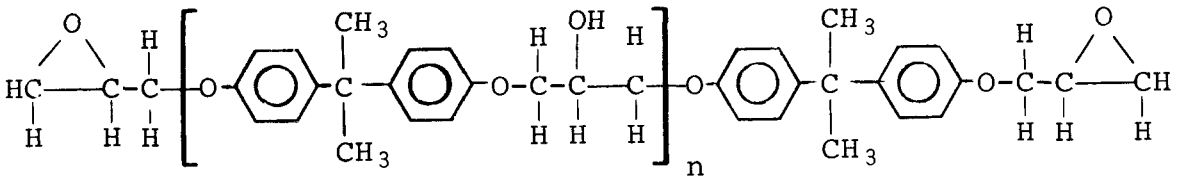

(Epichlorohydrin-bisphenol A epoxy resin)

Uncured epoxy resins are crosslinked by either of two methods. Direct crosslinking is initiated by a catalyst such as a tertiary amine or a boron trifluoride complex, or a combination of these materials. Indirect crosslinking is achieved with hardening agents such as polyfunctional amines or dibasic acid anhydrides.

Nylon Resins--

Five common types of nylon resins are produced: nylon 6/6, nylon 6, nylon 6/10, nylon 6/12, nylon 11, and nylon 12. Thermoplastic nylon 6/6 polymer is made from adipic acid and hexamethylenediamine (HMDA) as follows:

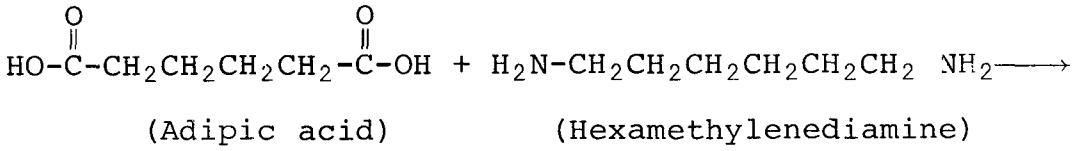

(Adipic acid) (Hexamethylenediamine)

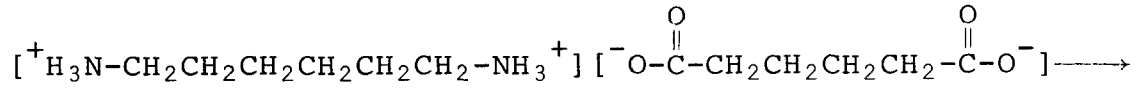

(Hexamethylenediammonium adipate salt)

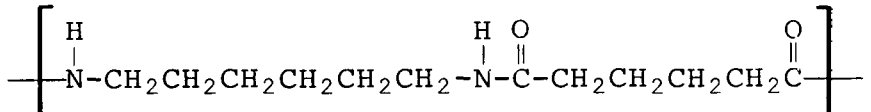

(3)

(Nylon 6/6)

---

(5) Terry, H., and S. Nagy. System Analysis of Air Pollutant Emissions from the Chemical/Plastics Industry. EPA-650/2-74-106, U.S. Environmental Protection Agency, Research Triangle Park, North Carolina, October 1974. 281 pp.

Nylon 6/6 derives its name from the six carbon atoms in adipic acid and the six carbon atoms in HMDA (6).

Nylon 6 is synthesized from caprolactam, $CH_2(CH_2)_4NHCO$. Nylon 6/10 polymer is made from hexamethylemediamine and sebacic acid, $HOOC(CH_2)_8COOH$. Nylon 6/12 is made from HMDA and dodecanoic acid, $HOOC(CH_2)_{10}COOH$. Nylon 11 is produced by self condensation of 11-aminoundecanoic acid, while Nylon 12 is produced by self-condensation of laurolactam (6).

Phenolic Resins--

Phenolic resins are produced by polymerizing phenol, resorcinol, or an alkyl-substituted phenol with formaldehyde (7). Curing of the thermosetting resin requires either one or two stages, depending on the curing agent used. Formaldehyde is used for one-stage resins (8) which have a short shelf life because of chemical instability. Hexamethylenetetramine ("hexa") is used as the curing agent for two-stage resins, which are prepared by reacting phenol with enough formaldehyde to produce a solid resin that can be stored for long periods. "Hexa" is blended with the solid resin prior to molding (8). About three-fourths of the phenolic resins consumed consist of the two-stage type material (9).

Polyacetal Resins--

Polyacetal resins are produced and consumed as homopolymers and as copolymers. Acetal homopolymer is produced by polymerizing formaldehyde to form a linear polyoxymethylene resin. The polymerization reaction is

$$n\ \begin{array}{c} H \\ | \\ C{=}O \\ | \\ H \end{array} \xrightarrow{\text{catalyst}} \left[\begin{array}{c} H \\ | \\ C{-}O \\ | \\ H \end{array} \right]_n \qquad (4)$$

where n equals 1,000 to 4,000 monomer units. The thermoplastic polymer is stabilized either by capping its end groups with acetic anhydrided, $(CH_3CO)_2O$, in the presence of an alkali acetate catalyst, or by copolymerizing with ethylene oxide.

---

(6) Odian, G. Principles of Polymerization. McGraw-Hill Book Company, New York, New York, 1970. 652 pp.

(7) Sherman, S. Epoxy. Modern Plastics, 50(10A):36-40, 1973.

(8) Hull, M. E. Phenolic. Modern Plastics, 50(10A):52-56, 1973.

(9) Martin, R. W. The Chemistry of Phenolic Resins. John Wiley and Sons, Inc., New York, New York, 1956. 298 pp.

Polycarbonate Resins--
Polycarbonate resins are thermoplastic polyesters of carbonic acid having the following chemical structure:

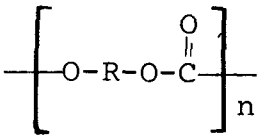

Although R in the preceding structure may be either aliphatic or aromatic, the only polycarbonate resin of current commercial importance in produced from bisphenol A and phosgene, $COCl_2$.

Polyester Resins--
Unsaturated polyester resins are produced from maleic anhydride, phthalic anhydride, and propylene glycol. Maleic anhydride, phthalic anhydride and propylene glycol are combined in a mole ratio of 1:2:3.15 to form the resin. Styrene is added to the above mix until it comprises 35% of the total weight.

Reinforced materials are produced from unsaturated polyester resins by the addition of glass fibers. Reinforced unsaturated polyester resins are processed using special techniques including lay-up (batch laminating), spray-up (spray painting of resin and fiber glass), continuous laminating, filament winding, matched die molding, injection molding, and centrifugal casting.

Polyethylene Resins--
Polyethylene resins are thermoplastics containing the following repeating unit:

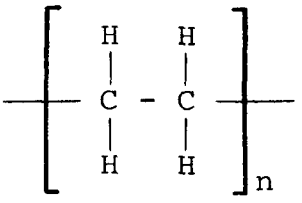

where n can vary from 350 to 140,000 monomer units, with a typical range of 1,800 to 18,000. Polyethylene resins are produced in three types:

Type of Polyethylene	Specific Gravity
Low density	0.925 and lower
Medium density	0.926 to 0.940 (usually included with low density)
High density	0.941 and higher

Low-density polyethylene (LDPE) and high-density polyethylene (HDPE) have different molecular structures. They are manufactured by different processes. LDPE is produced using high pressure (70 MPa to 350 MPa) (5). HDPE is produced by a low pressure (0.5 MPa to 3.0 MPa) process (5).

Polypropylene Resins--
Polypropylene resins are themoplastics containing the following repeating unit:

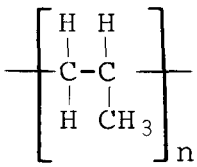

Theoretically, polypropylene resins can exist in three isomeric forms: atactic (amorphous), isotactic, and syndiotactic. Approximately 90% to 95% of the commercial polypropylene resins produced are in the isotactic form; 5% to 10% of those produced are in the atactic form; and none are produced in the syndiotactic form. The atactic polypropylene resins are of lower molecular weight than those in the isotactic form (personal communications with I. O. Salyer and G. A. Richardson, Monsanto Research Corporation, Dayton, Ohio, 18 July 1977).

Polystyrene and Styrene Copolymer Resins--
The styrene resins consist of general-purpose and impact polystyrenes. Styrene copolymer resins are those polymeric materials which contain at least 45 weight percent styrene, although this weight percent may span a broad range.

Polystyrene resins are obtained by the free-radical polymerization of styrene monomer in the presence of an initiator such as benzoyl peroxide. While polystyrene and styrene copolymer resins (such as styrene-acrylonitrile and acrylonitrile-butadiene-styrene) can be and have been manufactured by emulsion, mass, solution or suspension techniques, suspension and continuous solution polymerization are now the primary methods used in commercial practice. Emulsion polymerization is still used in the rubber and surface-coating resin industries; mass (bulk) polymerization has been phased out (personal communications with D. Popielski, Monsanto Polymers and Petrochemicals Company, Port Plastics, Cincinnati, Ohio and G. A. Richardson, Monsanto Research Corporation, Dayton, Ohio, 19 July (1977).

General-purpose polystyrenes are glossy, crystal clear, high-molecular-weight thermoplastic resins. Impact polystyrenes contain polybutadiene to improve their impact strength.

Although a typical styrene-acrylonitrile resin contains about 25 weight percent acrylonitrile, the amount can vary from 18% to 68% (personal communications with D. Popielski, Monsanto Polymers and Petrochemicals Company, Port Plastics, Cincinnati, Ohio, and G. A. Richardson, Monsanto Research Corporation, Dayton, Ohio, 19 July 1977). Acrylonitrile-butadiene-styrene resins include a number of materials that contain 50% or more styrene with varying amounts of acrylonitrile and butadiene. These resins are two-phase systems in which polybutadiene is dispersed in a rigid styrene-acrylonitrile matrix.

Polyurethane Resins--
Polyurethanes are produced from polyhydroxy compounds and polyisocyanates according to the following chemical reaction:

$$n\ O{=}C{=}N{-}R{-}N{=}C{=}O + n\ HO{-}R'{-}OH \rightarrow \left(R{-}\overset{H}{\overset{|}{N}}{-}\overset{O}{\overset{\|}{C}}{-}O{-}R'{-}O{-}\overset{O}{\overset{\|}{C}}{-}\overset{H}{\overset{|}{N}}\right)_n \qquad (5)$$

where R and R' may be aromatic or aliphatic hydrocarbon groups.

Flexible polyurethane foams--Flexible polyurethane foams are based on toluene diisocyanate (TDI) and polyether polyols. The TDI consists of an 80:20 mixture of 2,4-toluene diisocyanate and 2,6-toluene diisocyanate. Typical polyether polyols used are polypropylene glycols and the propylene adduct of trimethylolpropane. Propylene adducts of glycerin, 1,2,6-hexanetriol, and a host of others are also used.

Rigid polyurethane foams--Rigid polyurethane foam is manufactured from di- or tri-functional isocyanates and di-, tri-, tetra-, or higher-functionality polyols. The amounts of these ingredients are varied depending upon the end-use requirements and the physical characteristics of the foam. Density, uniformity, and compressive strength of the foam are all affected by slight changes in the chemical composition.

Polyvinyl Chloride and Copolymer Resins--
Thermoplastic polyvinyl chloride resins are produced and consumed as homopolymers and copolymers. The homopolymer is commercially produced by polymerizing vinyl chloride in the presence of initiators, such as peroxides and persulfate-redoxisystems, using one of three basic processes: suspension, emulsion, and bulk polymerization. The polymerization reaction is as follows:

$$n\ \begin{matrix} H & Cl \\ | & | \\ C & = C \\ | & | \\ H & H \end{matrix} \longrightarrow \left[\begin{matrix} H & Cl \\ | & | \\ C & - C \\ | & | \\ H & H \end{matrix} \right]_n \qquad (6)$$

where n can vary from 800 to 2,000 monomer units.

Reinforced Thermoplastics--
Reinforced thermoplastics are manufactured by adding glass fibers to commercially available resins such as nylon, polyacetal, polycarbonate, polyester, polyethylene, polypropylene, and polystyrene and styrene copolymers. Reinforcement improves the tensile strength, flexural modulus ("stiffness"), heat resistance, and other mechanical properties of base thermoplastic resins.

Blending chopped glass fibers with a particular resin in an extruder and passing continuous glass filaments through a polymer melt tank yield "short glass" and "long glass" products, respectively. Glass fiber loadings of 20% to 40% (by weight) are typical of reinforced thermoplastics today (10).

Urea and Melamine Resins--
Amino resins are produced by reacting formaldehyde with organic compounds such as urea (H_2NCONH_2) and melamine ($H_2N\overline{CNC(NH_2)NC(NH_2)N}$) which contain more than one $-NH_2$ functional group. Curing of urea-formaldehyde and melamine-formaldehyde resins involves further polymerization induced by acid catalysis or the application of heat. These resins are usually processed either as spray-dried powders or as aqueous or alcoholic solutions (11). It is their solubility in water that makes the urea and the melamine resins particularly suitable for the production of adhesives and coatings.

Process Operations

The plastics processing industry employs essentially seven different process operations to manufacture finished products from plastic resins and other new materials. The basic operating principles of each of these seven processing methods are discussed below.

Adhesives Production--
An adhesive is defined as a substance capable of holding materials together by surface attachment (12). Phenolic resins and amino resins (urea-formaldehyde, melamine-formaldehyde) account for 98% of the adhesives produced by the plastics processing industry (13).

---

(10) Encyclopedia of Polymer Science and Technology, Vol. 12. John Wiley and Sons, Inc., New York, New York, 1970. p. 32.

(11) O'Neill, C. T. Amino. Modern Plastics, 52(10A):14-16, 1975.

(12) Encyclopedia of Polymer Science and Technology, Vol. 1. John Wiley and Sons, Inc., New York, New York, 1964. pp. 482-502.

(13) Plastics Sales Data, 1976 vs. 1975: Back Over the 13,000,000-Ton Mark. Modern Plastics, 54(1):49-52, 1977.

Phenolic resins are made by acid- or base-catalyzed condensation of phenol and formaldehyde, the ratio of these reactants ranging from 1:0.8 to 1:1.5 (12). Phenolic plywood adhesives are basically solutions of low-molecular-weight resin in aqueous sodium hydroxide. The adhesive for exterior-grade plywood is prepared by mixing the following amounts of ingredients: phenol-formaldehyde, 25% to 30%; sodium hydroxide 2% to 4%; soluble dried beef blood, 0% to 10%; fillers, such as oat-hull lignins, bark, or wood flour, 10% to 25%; and water, 31% to 63% (12). In addition to solvent dispersions, phenolic adhesives are available as powders or tissue-backed glue films.

Liquid urea resin adhesives are produced by condensing 1 mol of urea with 1.5 mol to 2 mol of aqueous formaldehyde in alkaline solution (12). Fillers, catalysts, and buffering agents are added to the resin before its end-use. Powdered urea resin adhesives can be made by spray-drying.

Melamine-formaldehyde resins are synthesized by reacting one mole of melamine with three moles of formaldehyde under slightly alkaline conditions (12). Although melamine adhesives exhibit superior resistance to water and heat, they are expensive and are often diluted with urea resins.

Coating--
Six different methods of applying plastic coatings will be briefly described here. A variation of another method, extrusion coating, is used to produce plastic film and will be discussed in Section 3.

Calender coating begins by squeezing the desired plastic between heated rolls to form self-supporting sheets. The same set of calender rolls is then used to press the plastic sheets against a web of support material, thus bonding them to form the coated product.

Dip coating is applicable to irregularly shaped objects such as automotive parts, tool handles, and toys. Following complete immersion in a tank of resinous solution, the coated articles are drained and then dried for approximately 5 min in an oven heated to 180°C to 200°C (14) as shown in Figure 1.

Metallic objects can be coated with liquid or powdered plastics in the form of charged droplets generated by a specially constructed spray nozzle. Continuous webs of paper or textiles can also be electrostatically coated by providing a grounded support plate or roller to attract the charged plastic particles.

---

(14) Encyclopedia of Polymer Science and Technology, Vol. 3. John Wiley and Sons, Inc., New York, New York, 1967. pp. 765-830.

Fluidized-bed coating has been used to apply cellulosic epoxy, nylon, polyethylene, polyvinyl chloride, and other plastics to individual articles or continuous webs. The object to be coated is heated to a temperature above the melting point of the desired resin, lowered into a fluidized bed of powder, and then removed as a finished product.

The simplest mechanical device used for continuously spreading a plastic coating onto flat surfaces is a knife, one application of which is shown in Figure 2. The thickness of the coating is directly determined by the separation between the knife edge and the surface of the base material.

Reverse-roll coating can be adapted for use with a wide variety of coating compositions, viscosities, and thicknesses. In this process, depicted in Figure 3, a controlled amount of resin is delivered from two metering and coating rolls to a third roll, located below the first two, which "wipes" the coating onto a web of support material.

Extrusion--
Extrusion is the process of shaping materials by forcing them through a specially designed orifice under controlled conditions (15). Thermoplastics are subjected to temperatures up to 330°C and pressures up to 35,000 kPa in an extruder in order to produce a polymer melt capable of flow through the orifice (16).

After mixing, granular or powdered resin and colorants, fillers, stabilizers, and other additives are fed to the machine through a conical hopper, as shown in Figure 4 (17). These raw materials are usually preheated to prevent the formation of bubbles (by driving off volatile constituents) and to prevent hydrolysis of the resin (by evaporating any residual moisture in the feed).

One or more screws rotating inside the extruder barrel carry the cold, bulky feed material forward to the compression zone, where the plastic is melted to uniform consistency by the action of viscous drag. In the so-called metering zone, sufficient pressure is developed to force the molten plastic through the orifice or "die," at a constant flow rate.

---

(15) Envyclopedia of Polymer Science and Technology, Vol. 6. John Wiley and Sons, Inc., New York, New York, 1967. pp. 466-467.

(16) Plastics Engineering Handbook of The Society of the Plastics Industry, Inc., Third Edition. A. F. Randolph, ed. Reinhold Publishing Corporation, New York, New York, 1960. 565 pp.

(17) Encyclopedia of Polymer Science and Technology, Vol. 8. John Wiley and Sons, Inc., New York, New York, 1968. p. 555.

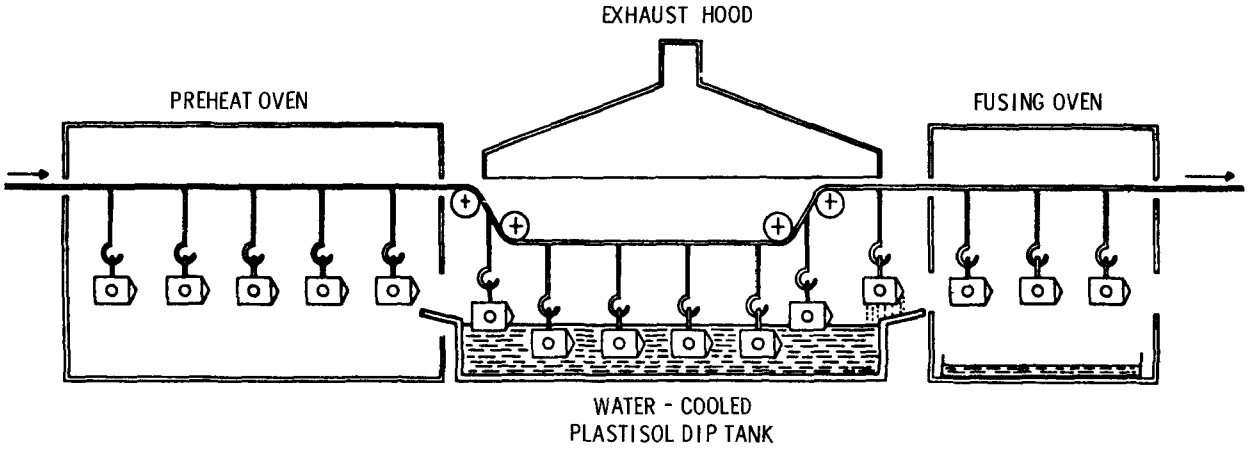

Figure 1. Dip-coating line (14).

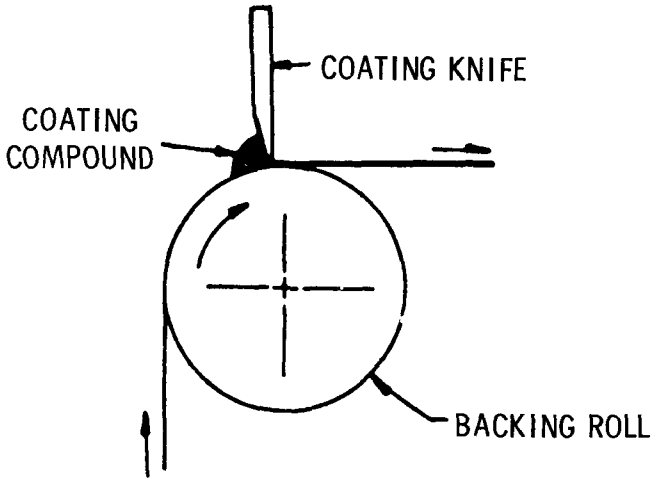

Figure 2. Knife-over-roll coating (14).

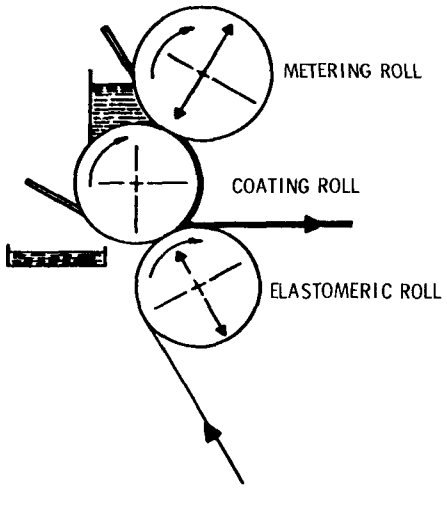

Figure 3. Reverse-roll coating (14).

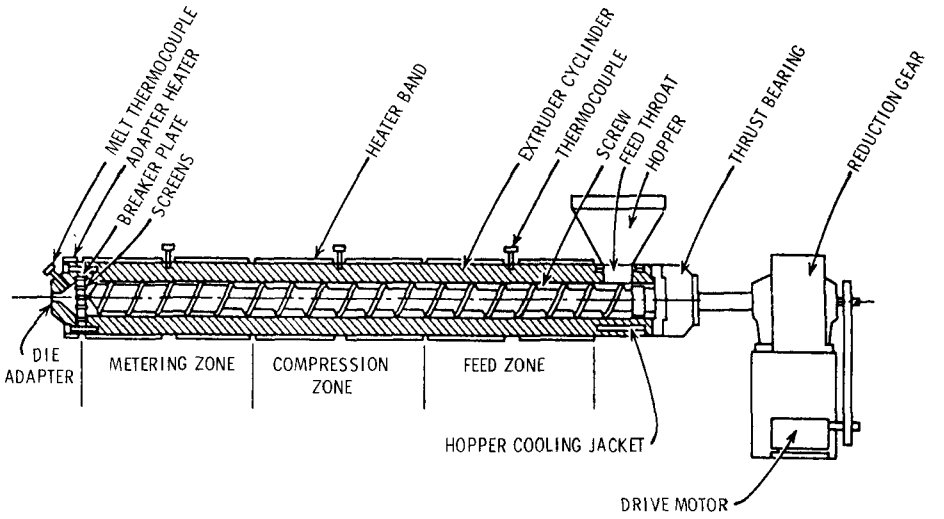

Figure 4. A typical single-stage, single-screw extruder for plastics (17).

The extruded product is then transported over rollers, a conveyor belt, or other take-off equipment to facilities for cooling the hot plastic by air or liquid. Automatic cutting and winding devices are available for final product preparation.

Film and Sheet Production--
Melt extrusion, using flat or circular dies, and solvent casting are the most commonly used methods of film manufacture. Sheeting is produced by extrusion or *in-situ* polymerization.

Thermoplastic linear polymers, such as polyethylene and polyvinyl chloride, can be extruded using a slot die which is approximately as wide as the finished film and about 10 to 40 times the thickness (18). Typical melt-extrusion temperatures range between 160°C and 300°C (18). After the flat film exits from the rectangular die, it is cooled by a liquid bath or chilled rotating rolls before final trimming and windup (Figure 5). This particular film manufacturing process is used only by a few large-volume producers (19).

---

(18) Encyclopedia of Polymer Science and Technology, Vol. 6. John Wiley and Sons, Inc., New York, New York, 1967. pp. 764-775.

(19) Hager, J. E. Polyethylene Film and Sheet. Modern Plastics, 52(10A):138, 1975.

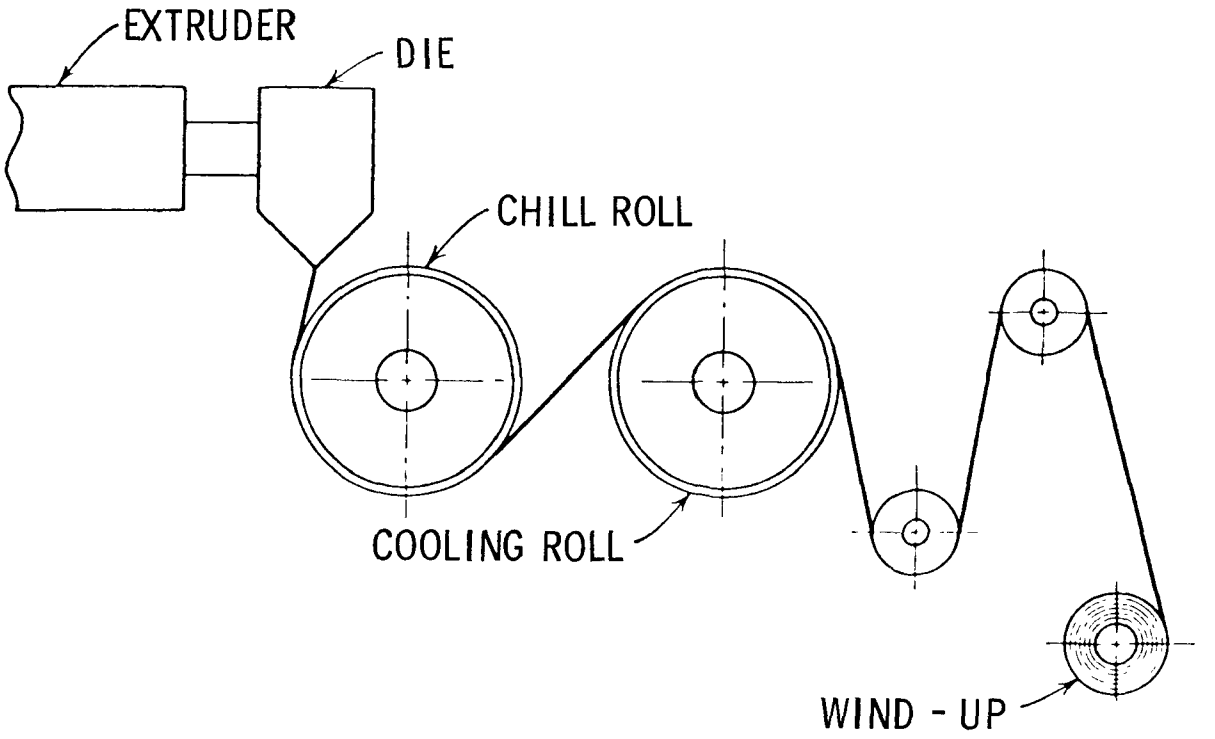

Figure 5. Production of plastic film by slot-die extrusion (18).

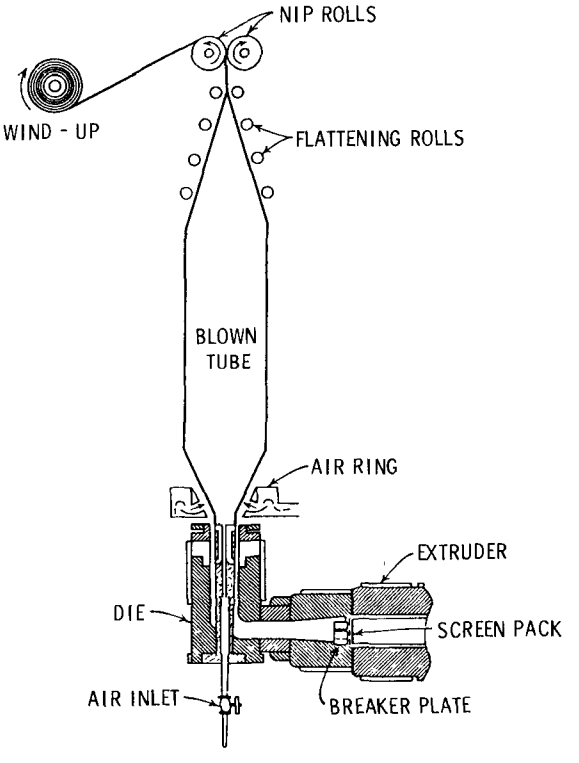

Figure 6. Production of plastic film by circular-die extrusion (18).

Melt extrusion using a circular die produces on inflated tube of hot plastic rather than a flat sheet. This "bubble" is air-cooled externally, collapsed by nip rolls, and then wound as is (Figure 6) or after being slit longitudinally to yield a film of greater width.

Solvent casting is accomplished by extruding a solution of resin and additives onto rotating drums or endless belts. Film is formed by carefully evaporating the solvent in large, multizoned ovens. These ovens are often equipped with vapor recovery systems to minimize solvent losses (20).

Sheets may be manufactured by *in-situ* batch polymerization of reactive monomers such as methyl methacrylate, the starting material for the most common acrylic plastic. Two pieces of heat-resistant glass separated by a peripheral gasket serve as the mold for a single plastic sheet. Curing temperatures for molded sheet may be as high as 93°C (21).

Foam Generation--
An example of this process operation is the production of polyurethane foam, which accounts for 70% of all foams manufactured by the plastics processing industry (13). Polyurethane foam is formed by catalytic reaction of a polyfunctional isocyanate and a polyhydroxy compound. The blowing agent for flexible foams is carbon dioxide, generally *in-situ* by the reaction of isocyanate and water. For rigid foams, blowing is enhanced by using volatile liquids, usually halogenated hydrocarbons such as dichlorodifluoromethane, which vaporize upon heating of the reaction mixture.

In practice, polyurethane foams are produced by either of two general types of processes: the "one-shot" method, in which all the required ingredients are mixed and discharged onto a suitable surface for expansion; and the "prepolymer" process, wherein the polyhydroxy compound is reacted with sufficient polyisocyanate to form a prepolymer with isocyanate end groups. The prepolymer mixture, containing excess isocyanate, is treated with water and the appropriate catalyst, resulting in simultaneous expansion and crosslinking of the foam.

Preparation of commercial foam slabstock begins by dispensing overlapping parallel lines of the mixed reactants described above onto a continuously moving paper web. This method is used because the usual methods of mixing raw materials may lead to temperatures as high as 170°C in the expanding foam from the heat

---

(20) Smith, D. E. Casting of PVC Film. Modern Plastics, 52(10A):266, 1975.

(21) Gambina, H. J., Jr. Casting of Acrylics. Modern Plastics, 52(10A):263-264, 1975.

of reaction (22). After the paper backing is removed, the raw polyurethane foam slab or "bun" is treated with steam or radiant heat in an oven to cure the surface. The foam "bun" is then cut into blocks of standard lengths, and these are transported to a storage room for cooling.

Lamination--Laminates are plastic products consisting of multiple layers of reinforcing materials which have been coated with a resinous binder and then fused into rigid sheets by the application of heat and pressure. All thermosetting plastics are suitable as laminating binders, but phenolics are the most commonly used.

Commercial production of laminated plastics involves three basic operations: impregnation, drying, and pressing. The synthetic resin is dissolved in open kettles to form a "varnish" containing the resin, an appropriate solvent, and various chemical additives. The base material, a web of either paper or fabric, is continuously impregnated with the resin solution by passing it through a shallow dip tank.

After excess laminating varnish is removed by scraper blades or squeeze rolls, the coated web is drawn through an air-heated oven to vaporize the solvent and increase the average molecular weight of the resin by further reaction (see Figure 7). The temperature

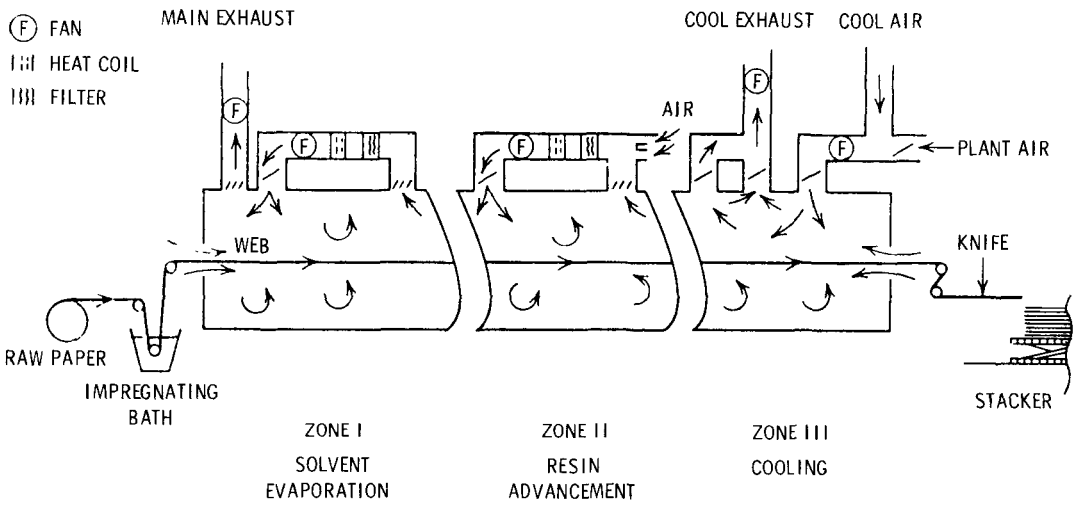

Figure 7. Schematic diagram of impregnation and drying operations in laminated plastics production.

---

(22) Encyclopedia of Polymer Science and Technology, Vol. 15. John Wiley and Sons, Inc., New York, New York, 1971. pp. pp. 445-479.

(23) Encyclopedia of Polymer Science and Technology, Vol. 8. John Wiley and Sons, Inc., New York, New York, 1968. pp. 121-148.

of the oven at the web inlet is maintained at 110°C to 120°C to evaporate the solvent (23). Venting the oven to the atmosphere causes emission of hydrocarbons, including the solvent and volatile resin constituents.

The dried web is next cut into pieces of appropriate length by rotary knives. Several pieces of different impregnated base materials can be arranged in any desired order to form a composite sheet. A number of such sheets, separated by steel plates, are simultaneously converted into laminates by compaction in a hydraulic press at pressures of 1,400 kPa to 12,000 kPa and temperatures of 140°C to 180°C (24). Total curing time ranges from 45 min to 4 hr, depending on the resin used and the thickness of the laminated sheet (24).

Molding--
Plastic objects of almost any desired shape can be produced commercially by five different types of molding processes: blow, compression, injection, rotational, and transfer (25).

Blow molding is used to produce bottles and other hollow articles from thermoplastic resins. A tube or "parison" of softened plastic is inserted into a two-part cavity mold. Air at pressures of 170 kPa to 690 kPa is used to expand the parison against the cool mold surfaces, where the plastic hardens into shape (25).

In compression molding, a measured quantity of thermosetting plastic is placed into the bottom half of an open mold which is heated to approximately 150°C (25). A hydraulic press brings the mold halves together, and the hot plastic is formed to the shape of the mold. A compression mold may be opened briefly at a predetermined time to release gaseous byproducts formed during the polymerization of some thermosetting compounds.

An injection-molding machine (Figure 8) fuses powdered or granular thermoplastics with heat and pressure and forces the molten mass into a cool chamber for solidification. Scrap plastic, left in the feed channels to the mold cavity after injection, is usually ground and reused as feed material.

Rotational molding is used to make hollow objects from powdered polyolefin plastics. A mold charged with a predetermined weight of plastic is placed in an oven at 205°C to 480°C and rotated

---

(24) Muller, G. J. Industrial Laminates. Modern Plastics, 52(10A):152-158, 1975.

(25) Encyclopedia of Polymer Science and Technology, Vol. 9. John Wiley and Sons, Inc., New York, New York, 1968. pp. 1-157.

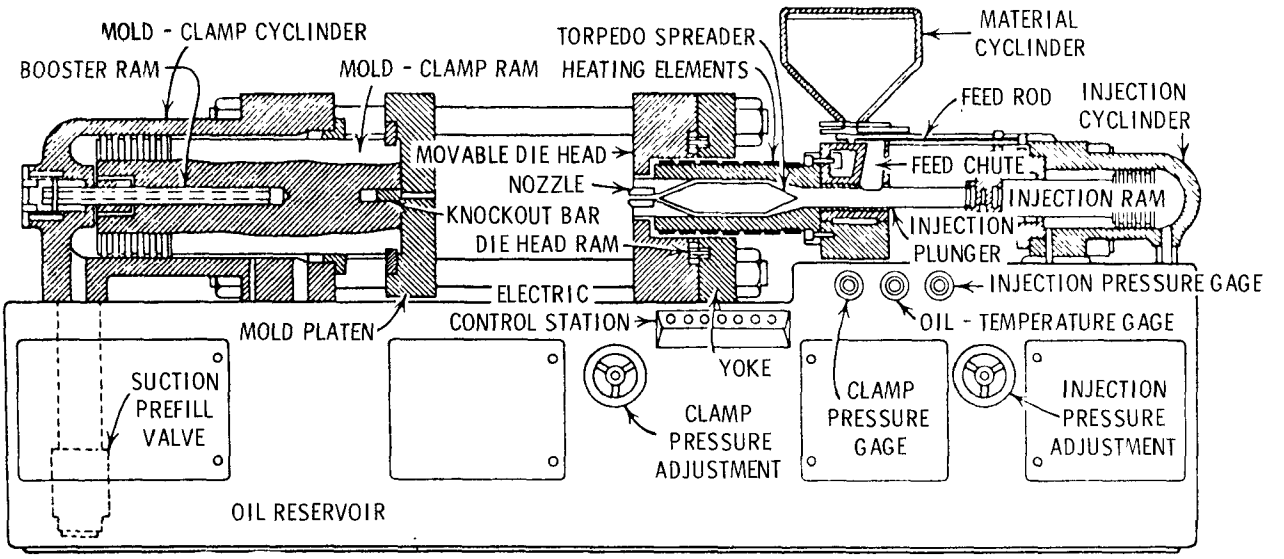

Figure 8. Schematic diagram of a plunger-type injection-molding machine (25).

around two perpendicular axes simultaneously (25). After the molten plastic has covered and become fused to the mold surfaces, the mold is chilled, and the product removed.

Transfer molding, shown in Figure 9, is a method of producing solid objects from thermosetting resins, much like compression molding. A "plunger" forces presoftened plastic through a small opening into a heated mold cavity, where final curing occurs. Physical properties of transfer-molded parts can often be improved by postcuring at elevated temperatures following removal from the mold.

GEOGRAPHICAL DISTRIBUTION

In 1972, plastics processing was performed in 7,698 plants in the United States according to the Census of Manufactures (2). These establishments are mostly located in highly populated, metropolitan areas. Table 4 presents the geographical distribution of plant sites and the 1976 consumption of plastics for processing. In those states in which an estimate of the number of plastic processing plants is listed, the known number of unspecified plant sites within a given geographic region was allocated in proportion to the populations of the states in that region (2, 26). Individual state consumptions were calculated primarily from the appropriate fractions of the total value of industry

(26) The World Almanac and Book of Facts 1976. G. E. Delury, ed. Newspaper Enterprise Association, Inc., New York, New York, 1975. 984 pp.

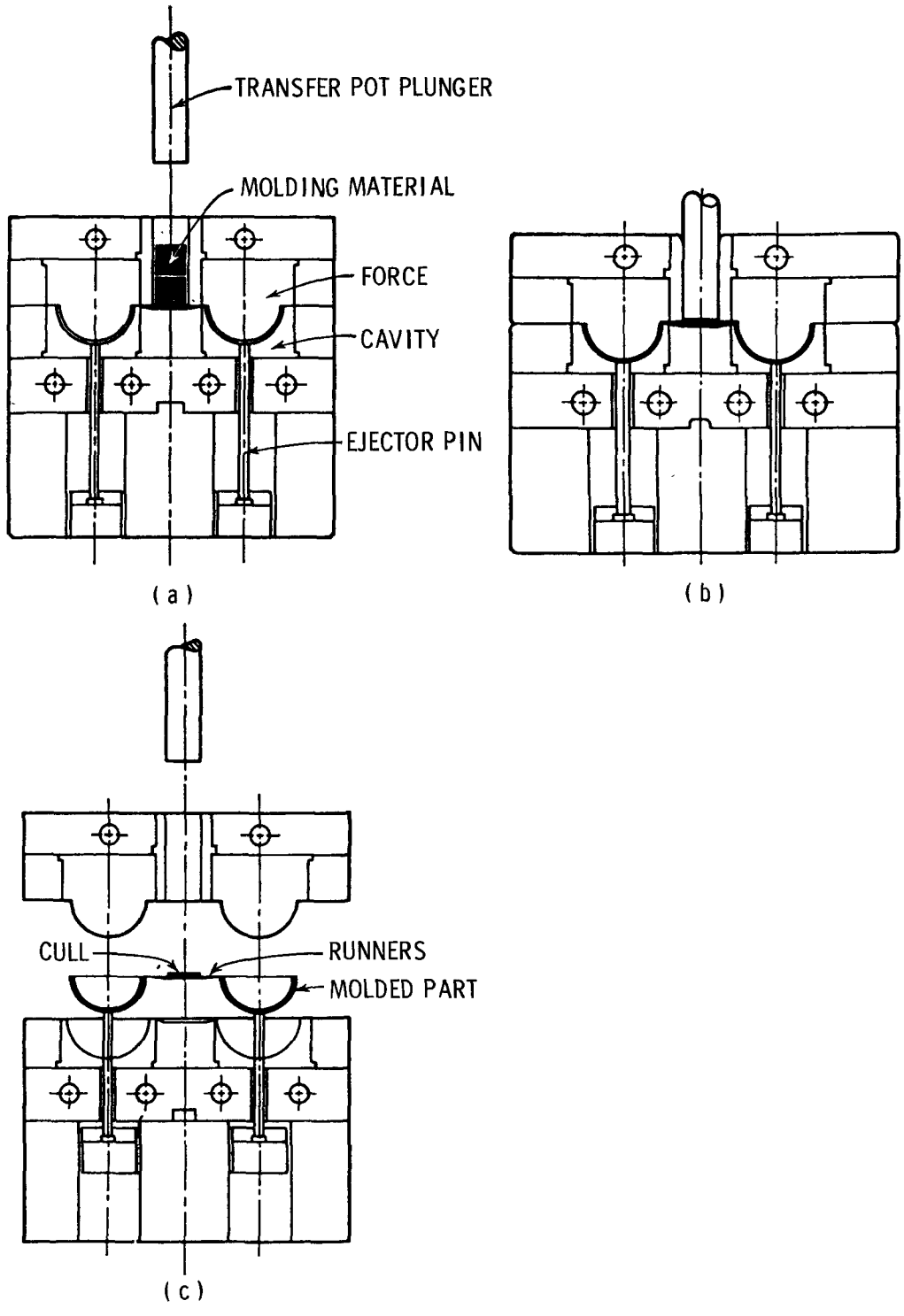

Figure 9. Basic transfer mold operation.

(a) Transfer mold closed, pot loaded; (b) transfer mold closed; (c) transfer mold open; mold part, cull, and runners ejected (25).

TABLE 4. GEOGRAPHICAL DISTRIBUTION OF PLASTICS PROCESSING (2)

State	Number of plants	Estimated consumption, 10^3 metric tons/yr
Alabama	46	151
Alaska	3[a]	1
Arizona	49	39
Arkansas	41	45
California	1,084	1,210
Colorado	63	27
Connecticut	154	159
Delaware	27	86
Florida	292	182
Georgia	111	125
Hawaii	7[a]	3
Idaho	11	5
Illinois	581	896
Indiana	208	494
Iowa	57	163
Kansas	77	100
Kentucky	50	164
Louisiana	33	36
Maine	16	63
Maryland	65	104
Massachusetts	378	537
Massachusetts	378	537
Michigan	416	605
Minnesota	174	203
Mississippi	30	84
Missouri	159	210
Montana	7[a]	3
Nebraska	23	35
Nevada	5[a]	2
New Hampshire	38	83
New Jersey	558	930
New Mexico	17	7
New York	785	894
North Carolina	126	284
North Dakota	8[a]	10
Ohio	546	1,370
Oklahoma	60	65
Oregon	53	29
Pennsylvania	384	684
Rhode Island	72	169
South Carolina	52	166
South Dakota	8[a]	10
Tennessee	104	332
Texas	322	448
Utah	32	14
Vermont	16	35
Virginia	53	293
Washington	101	58
West Virginia	17	10
Wisconsin	176	273
Wyoming	3[a]	2
TOTAL	7,698	11,900
Average plant capacity		1.55

[a]Estimated.

shipments (2), additional input being derived from the distribution of plant sites. The census data indicate that 10 states (California, Illinois, Indiana, Massachusetts, New Jersey, New York, Ohio, Pennsylvania, and Texas) account for over 67% of the plastics processing capacity. Figure 10 illustrates the geographical distribution of plastics processing plants.

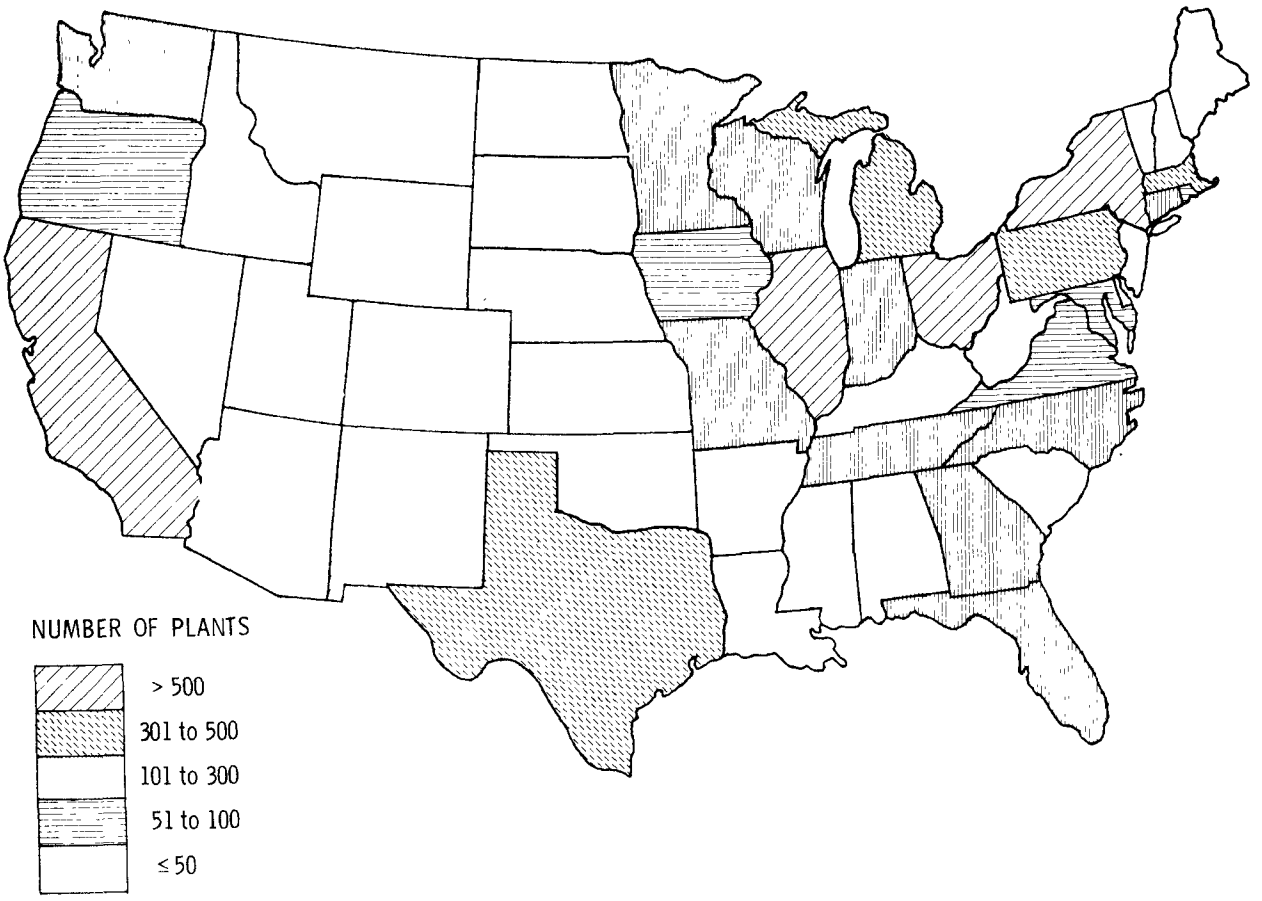

Figure 10. Geographical distribution of plastics processing plants.

SECTION 4

EMISSIONS

SELECTED POLLUTANTS AND THEIR CHARACTERISTICS

The materials emitted from plastics processing plants are: particulates, consisting of resin powders, solid additives, and hydrocarbon aerosols; and hydrocarbons, consisting of blowing agents, monomers, dimers, solvents, and additives such as plasticizers, lubricants, flame retardants, antioxidants, ultraviolet absorbers, catalysts, stabilizers, and fillers. Particulates and hydrocarbons were selected for study due to their adverse health effects and atmospheric reactivity. Sulfur oxides, nitrogen oxides, and carbon monoxide were not studied because they are not emitted from plastics processing operations.

The primary AAQS, health effects, and atmospheric reactivities of emissions from plastics processing are the same as those for similar emissions from other air pollution sources. Particulate emissions from plastics processing are composed of solid and liquid aerosols. The solid particulates are generated during grinding, cutting, sawing, and pneumatic conveying of polymeric materials. Hydrocarbon emissions from plastics processing are the result of one or more of the seven previously described process operations performed by this industry--adhesives production, coating, extrusion, film and sheet production, foam generation, lamination, and molding.

EMISSION FACTORS

The quantities of emissions produced per unit of material processed (i.e., emission factors) are presented in Table 5. These data, given for each plastic type and for each handling method or process operation, represent total uncontrolled emissions of hydrocarbons or particulates, no specification being made as to the composition of the materials emitted. Table 5, a compilation of information gathered from the literature and from a National Emissions Data System (NEDS) Point Source Listing,[a] includes only

[a]Point Source Listings are provided by EPA from the NEDS via the Aerometric and Emissions Reporting System (AEROS) (27).

---

(27) Aerometric and Emissions Reporting System (AEROS), U.S. Environmental Protection Agency, National Air Data Branch, Research Triangle Park, North Carolina.

those data sources which contain emission factors or data that can be used to calculate such factors. The accuracy of the data contained in the table is unknown. (Blanks in the table indicate that particular data are not reported in the cited references.)

The emission factor cited in Section 2 for plastic film and sheet production (20 g/kg) was calculated by averaging the values given at the bottom of Table 5 for film production (21 g/kg) and for sheet production (7 g/kg). This average emission factor was weighted according to the quantities of plastics known to be used in 1976 for film only (1,684 metric tons) and for sheet only (135 metric tons), 87.4% of the former having been for low-density polyethylene film (13).

TABLE 5. TOTAL HYDROCARBON AND TOTAL PARTICULATE EMISSION FACTORS FOR PLASTICS PROCESSING[a,b] (g/kg)

	Handling method					Process operation							
Plastic type	Storage	Conveying	Dry blending	Hot roll mixing	Grinding	Adhesives	Coating	Extrusion	Film	Sheet	Foam	Laminates	Molding
Acrylic			-	-		-			-		-	-	
Cellulosic			-	-	P;45	-	-	H,140			-	-	
Epoxy			-	-		H;25[c]					-		
Nylon			-	-		-	-				-	-	H;15
Phenolic			-	-	P;16	H;25[c]		-	-	-	-		H;7 to 60
Polyacetal			-	-		-	-		-		-	-	H;1.5
Polycarbonate			-	-		-	-	-	-		-	-	H,32
Polyester			-	-		-					-	H,28 to 53	H;20
High-density polyethylene			-	-		-	-	H,5.5			-	-	
Low-density polyethylene			-	-		-	-	H;33	H,33	-	-	-	
Polypropylene			-	-		-	-			-	-	-	
Polystyrene and styrene copolymers			-	-		-			-	-	H;20 to 40[c]	-	H;1
Polyurethane			-	-		H;25[c]		H;1			H;14 to 420	-	
Polyvinyl chloride and copolymers			P,1 to 30	P,9	P;40	-	H;35 to 75	H;20 to 90	H;6 to 24	H;3 to 10			
Reinforced thermoplastics			-	-		-	-	-	-	-	-	-	
Urea and melamine			-	-		H;25[c]		-	-	-	-	-	P,75
Emission factors not specified by polymer	P,1.5 to 4	P,0.7 to 1.2											
Average values	P,2.8	P;0.9	P,15	P;9	P;34	H;25	H;55	H,48	H,21	H,7	H;120	H,41	H,20 P;75

[a] Dashes denote no consumption of plastic type for process operation shown, blank spaces denote no available data, P denotes particulates, H denotes hydrocarbons, ranges, when shown, designate lowest and highest values. All factors represent uncontrolled emissions.

[b] Emission factor data derived from Reference 27 unless otherwise noted.

[c] Monsanto Research Corporation estimates.

DEFINITION OF A REPRESENTATIVE SOURCE

Representative sources of emissions from plastics processing were defined for use in determining the source severity described in Section 4. A representative source is any plant which annually converts 3,330 metric tons of any one type of raw plastic into finished products. This production rate was chosen because it equals the mean production rate for the 3,300 plastic processing plants which employ 20 or more people (2). Note that these 3,300 plants account for more than 90% of the total domestic plastics processing capacity (2).

A total of 16 representative plastics processing plants is needed in that 16 different resins (low-density polyethylene, polyvinyl chloride, polyurethane, etc.) are processed in quantities greater than 25,000 metric tons/yr in the United States. Each of these 16 plants is assumed to practice the appropriate distribution of process operations for its particular plastic type, as given in Table 1 of Section 2.

Emissions from plastics processing equipment are assumed to be collected by plant ventilation and released to the atmosphere from the top of a two-story building at a height of 6.1 m. The following additional assumptions were made to characterize the representative plastics processing sources: wind speed equals the national average of 4.5 m/s; meteorological conditions correspond to atmospheric stability Class C; and population density surrounding each plant is 100 persons/km^2, which equals the population density for the state with the largest capacity; i.e., Ohio.

SOURCE SEVERITY

Maximum Ground Level Concentration

The maximum ground level concentration, χ_{max}, of each criteria pollutant resulting from plastics processing for each representative source was estimated using Gaussian plume dispersion theory. Detailed derivations of all source severity equations are given in Appendix B. χ_{max} values were calculated using the formula

$$\chi_{max} = \frac{2\,Q}{\pi h^2 e \bar{u}} \qquad (7)$$

where Q = mass emission rate, grams per second
$\bar{u}$ = average wind speed, meters per second
h = average emission height, meters
e = 2.72

Values of maximum ground level concentrations of hydrocarbons and particulates are shown in Table 6 for the respresentative sources.

TABLE 6. MAXIMUM GROUND LEVEL CONCENTRATIONS FOR MATERIALS EMITTED FROM PLASTICS PROCESSING

Plastic type	Maximum ground level concentration, χ_{max}, g/m^3	
	Hydrocarbons	Particulates
Acrylic	0.0045	0.00070
Cellulosic	0.0038	0.00070
Epoxy	0.0068	0.00070
Nylon	0.0031	0.00070
Phenolic	0.0044	0.0041
Polyacetal	0.0014	0.00070
Polycarbonate	0.0045	0.00070
Polyester	0.0043	0.0081
High-density polyethylene	0.0025	0.00070
Low-density polyethylene	0.0034	0.00070
Polypropylene	0.0047	0.00070
Polystyrene and styrene copolymers	0.0033	0.00070
Polyurethane	0.032	0.00070
Polyvinyl chloride and copolymers	0.0056	0.0043
Reinforced thermoplastics	0.0029	0.00070
Urea and melamine	0.0044	0.0018

Severity Factor

To obtain an indication of the hazard potential of the representative sources, a severity factor, S, was defined as

$$S = \frac{\overline{\chi}_{max}}{F} \tag{8}$$

where

$$\overline{\chi}_{max} = \chi_{max}\left(\frac{t_o}{t}\right)^{0.17} \tag{9}$$

and F = primary ambient air quality standard for criteria pollutants, 1.6×10^{-4} g/m^3 for hydrocarbons[a] and 2.6×10^{-4} g/m^3 for particulates

t_o = "short-term" averaging time, 3 min

t = time-averaging period for criteria pollutants, 3 hr for hydrocarbons and 24 hr for pollutants

[a]There is no primary ambient air quality standard for hydrocarbons. The EPA has published a recommended guideline for meeting the primary ambient air quality standard for photochemical oxidants.

The severity factor represents the ratio of time-averaged maximum ground level exposure, $\overline{\chi}_{max}$, to the hazard level of exposure for a particular emission. $\overline{\chi}_{max}$ is the maximum ground level concentration, $\overline{\chi}_{max}$, averaged over a given period of time. For criteria pollutants, averaging times are the same as those used in the primary ambient air quality standards.

The severity factors for each emission from each representative source are shown in Table 7. It can be seen that the severity factor for hydrocarbons is greater than 1.0 for all 16 plastic types. The severity factors for particulates from phenolic, polyester, polyvinyl chloride, and urea and melamine plastics are also greater than 1.0; all other particulate severity factors are between 0.1 and 1.0.

TABLE 7. SOURCE SEVERITIES FOR PLASTICS PROCESSING

Plastic type	Source severity, S	
	Hydrocarbons	Particulates
Acrylic	14	0.94
Cellulosic	12	0.94
Epoxy	21	0.94
Nylon	9.5	0.94
Phenolic	14	5.5
Polyacetal	4.2	0.94
Polycarbonate	14	0.94
Polyester	13	11
High-density polyethylene	7.7	0.94
Low-density polyethylene	11	0.94
Polypropylene	15	0.94
Polystyrene and styrene copolymers	10	0.94
Polyurethane	98	0.94
Polyvinyl chloride and copolymers	17	5.8
Reinforced thermoplastics	9.0	0.94
Urea and melamine	14	2.4

Mass of Criteria Pollutant Emissions

The annual mass of emissions from each plastic type and each process operation was obtained by multiplying the appropriate emission factor (Table 5, Section 4) by the consumption of plastics. for each process operation (Tables A-1 through A-15, Appendix A). If no specific emission factor is given in Table 5 for a plastic type undergoing a certain process operation, the average value for that process operation was used. The entire quantity of every plastic type was assumed to be handled through both storage and conveying. It was also assumed that 3% of the total amount of every plastic type, in the form of defective and otherwise rejected products, was subject to grinding (for subsequent use as

recycled plastic). The masses of hydrocarbon and particulate emissions from plastics processing, thuse calculated, are presented in Tables 8 and 9, respectively.

Table 10 gives the ratios of criteria pollutant emissions resulting from plastics processing to the total criteria pollutant emissions from all stationary sources in each state and in the entire nation. These percentages were calculated using data from Reference 28 and Tables 4, 8, and 9 of this report. On a nationwide basis, the emissions from plastics processing constitute 2.79% of the hydrocarbon emissions and 0.12% of the particulate emissions from stationary sources.

Population Exposed to High Pollutant Concentrations

To obtain a quantitative evaluation of the population influenced by a high concentration of emissions resulting from plastics processing, the area exposed to the time-averaged ground level concentration, $\bar{\chi}$, for which $\bar{\chi}/F$ is greater than 1 was obtained by determining the area within the isopleth for $\bar{\chi}$. The number of people within the exposed area was then calculated by using the representative population density (100 persons/km^2) suggested in Section 4. A detailed explanation of the calculation of affected population is presented in Appendix B.

For each of the two criteria pollutants (i.e., hydrocarbons and particulates) emitted from the 16 representative plastics processing plants, the populations exposed to a time-averaged ground level concentration for which $\bar{\chi}/F$ is greater than or equal to 1 are shown in Table 11. Additional input data and output from the affected population calculations are tabulated in Appendix C. It should be noted that although hydrocarbon emissions from polyurethane processing have the largest severity in the entire plastics industry (Table 7), these emissions affect only 326 persons (Table C-1). The limited impact in human health of a source with a low emission height (e.g., 6.1 m for plastic processing) is the result of pollutants being dispersed over a very small area in the immediate vicinity of the source.

TABLE 8. NATIONAL MASSES OF HYDROCARBON EMISSIONS FROM PLASTICS PROCESSING (10^3 metric tons/yr)

Plastic type	Process operation								Total hydrocarbon emissions for plastic type
	Adhesives	Coating	Extrusion	Film	Sheet	Foam	Laminates	Molding	
Acrylic		3.4	2.0		0.53			0.82	6.8
Cellulosic			0.59	0.50	0.14			0.55	1.8
Epoxy	0.23	3.2	0.49	0.10	0.01		0.33	0.16	4.6
Nylon			0.72	0.11	0.08			0.90	1.8
Phenolic	8.7	0.67					1.9	6.1	17.4
Polyacetal			0.29		0.02			0.04	0.36
Polycarbonate					0.02			1.5	1.6
Polyester		0.33	10.3	0.17	0.01			9.2	20.1
High-density polyethylene			1.2	0.84	0.49			18.4	21.0
Low-density polyethylene			14.9	34.2				6.1	55.1
Polypropylene			20.9	1.9				9.5	32.2
Polystyrene and styrene copolymers		13.8	23.7			9.0		1.1	47.7
Polyurethane	0.02	0.28	0.00	0.02	0.00	160		0.12	161
Polyvinyl chloride and copolymers		3.2	50.2	8.1	1.2	2.7	0.69	10.4	76.5
Reinforced thermoplastics								1.3	1.3
Urea and melamine	8.1	4.0						0.84	12.9
PROCESS OPERATION TOTALS	17	29	125	46	2.5	172	2.9	67	462[a]

Note.—Blanks indicate no emissions present.

[a]The 462,000 metric tons/yr of hydrocarbon emissions from the plastics processing industry represent 2.8% of the total U.S. hydrocarbon emissions from all stationary sources (28).

---

(28) Eimutis, E. C., and R. P. Quill. Source Assessment: State-by-State Listing of Criteria Pollutant Emissions. EPA-600/2-77-107b, U.S. Environmental Protection Agency, Research Triangle Park, North Carolina, July 1977. 138 pp.

TABLE 9. NATIONAL MASSES OF PARTICULATE EMISSIONS FROM PLASTICS PROCESSING (10^3 metric tons/yr)

Plastic type	Handling Method						Total particulate emissions for plastic type
	Storage	Conveying	Dry blending	Hot roll mixing	Grinding	Molding	
Acrylic	0.61	0.21			0.22		1.0
Cellulosic	0.19	0.07			0.07		0.33
Epoxy	0.28	0.10			0.10		0.47
Nylon	0.24	0.08			0.09		0.41
Phenolic	1.6	0.56			0.60	13.7	16.5
Polyacetal	0.11	0.04			0.04		0.18
Polycarbonate	0.14	0.05			0.05		0.24
Polyester	1.9	0.66			0.70	34.7	37.9
High-density polyethylene	3.4	1.2			1.3		5.9
Low-density polyethylene	6.6	2.3			2.4		11.3
Polypropylene	2.8	1.0			1.0		4.7
Polystyrene and styrene copolymers	5.8	2.0			2.1		9.9
Polyurethane	2.1	0.72			0.76		3.5
Polyvinyl chloride and copolymers	5.6	1.9	31.4	18.3	2.0		59.3
Reinforced thermoplastics	0.19	0.07			0.07		0.32
Urea and melamine	1.2	0.42			0.44	3.2	5.3
PROCESS OPERATION TOTALS	33	11	31	18	12	52	157[a]

Note.—Blanks indicate no emissions present.

[a]The 157,000 metric tons/yr of particulate emissions from the plastics processing industry represent 0.12% of the total U.S. particulate emissions from all stationary sources (28).

TABLE 10. STATE MASSES OF EMISSIONS FROM PLASTICS PROCESSING

State	Hydrocarbons		Particulates	
	State hydrocarbon emission rate, 10^3 metric tons/yr	Percent of state's total hydrocarbon emissions	State particulate emission rate, 10^3 metric tons/yr	Percent of state's total particulate emissions
Alabama	5.9	2.59	2.0	0.09
Alaska	0.04	0.11	0.01	0.00
Arizona	1.5	1.53	0.51	0.02
Arkansas	1.7	1.28	0.59	0.04
California	47	3.30	16	0.27
Colorado	1.1	0.72	0.36	0.01
Connecticut	6.2	2.98	2.1	0.66
Delaware	3.3	5.06	1.1	0.80
Florida	7.1	1.66	2.4	0.10
Georgia	4.8	1.50	1.6	0.08
Hawaii	0.11	0.21	0.04	0.02
Idaho	0.18	0.32	0.06	0.00
Illinois	35	4.20	12	0.38
Indiana	19	4.56	6.5	0.29
Iowa	6.3	3.38	2.2	0.10
Kansas	3.9	1.62	1.3	0.04
Kentucky	6.4	2.78	2.2	0.13
Louisiana	1.4	0.14	0.48	0.03
Maine	2.5	4.30	0.84	0.08
Maryland	4.1	1.66	1.4	0.18
Massachusetts	21	5.66	7.1	1.28
Michigan	23	4.37	8.0	0.29
Minnesota	7.9	3.14	2.7	0.09
Mississippi	3.3	1.56	1.1	0.07
Missouri	8.1	2.63	2.8	0.09
Montana	0.11	0.13	0.04	0.00
Nebraska	1.4	1.34	0.47	0.02
Nevada	0.07	0.31	0.02	0.00
New Hampshire	3.2	8.67	1.1	0.35
New Jersey	36	5.69	12	1.79
New Mexico	0.29	0.25	0.10	0.00
New York	35	3.16	12	0.44
North Carolina	11	3.24	3.8	0.18
North Dakota	0.40	1.00	0.14	0.00
Ohio	53	6.34	18	0.57
Oklahoma	2.5	1.05	0.86	0.04
Oregon	1.1	0.72	0.38	0.01
Pennsylvania	27	2.94	9.0	0.28
Rhode Island	6.5	8.96	2.2	2.59
South Carolina	6.5	3.66	2.2	0.19
South Dakota	0.40	1.11	0.14	0.00
Tennessee	13	5.00	4.4	0.25
Texas	17	0.80	5.9	0.06
Utah	0.54	0.78	0.19	0.01
Vermont	1.3	6.36	0.46	0.16
Virginia	11	4.20	3.9	0.25
Washington	2.3	0.87	0.77	0.03
West Virginia	0.39	0.24	0.13	0.01
Wisconsin	11	3.78	3.6	0.16
Wyoming	0.04	0.04	0.01	0.00
NATIONAL TOTALS	462	2.79	157	0.12

TABLE 11. POPULATIONS EXPOSED TO PLASTICS PROCESSING EMISSIONS FOR WHICH $\bar{\chi}/F \geq 1$

Plastic type	Affected population, persons	
	Pollutant	
	Hydrocarbons	Particulates
Acrylic	41	2
Cellulosic	34	2
Epoxy	64	2
Nylon	27	2
Phenolic	40	22
Polyacetal	11	2
Polycarbonate	41	2
Polyester	39	46
High-density polyethylene	21	2
Low-density polyethylene	30	2
Polypropylene	43	2
Polystyrene and sytrene copolymers	30	2
Polyurethane	326	2
Polyvinyl chloride and copolymers	52	23
Reinforced thermoplastics	25	2
Urea and melamine	40	8

SECTION 5

CONTROL TECHNOLOGY

Emissions from the plastics processing industry consist of hydrocarbons and particulates. Control technology potentially applicable to each of these two criteria pollutants is described below.

HYDROCARBONS

Adsorption

Adsorption is the process for removing molecules from a fluid by contacting them with a solid. Gases, liquids, or solids can be selectively removed from air streams with materials known as adsorbents. The material which adheres to the adsorbent is called the adsorbate (29).

The mechanism by which components are adsorbed is complex, and although adsorption occurs at all solid interfaces, it is minimal unless the adsorbent has a large surface area, is porous, and possesses capillaries. The important characteristics of solid adsorbents are their large surface-to-volume ratio and their preferential affinity for individual components (29).

Adsorption is a three-step process. The adsorbent is first contacted with the fluid, and adsorption results. Second, the unadsorbed portion of the fluid is separated from the adsorbent. For gases, this operation is completed when the gases leave the adsorbent bed. Third, the adsorbent is regenerated by removal of the adsorbate. Low pressure steam is used to regenerate the adsorbent, and the condensed vapors are separated from the water by decantation, distillation, or both (29).

Activated carbon is capable of adsorbing 95% to 98% of the organic vapor from air at ambient temperature in the presence of

---

(29) Hughes, T. W., D. A. Horn, C. W. Sandy, and R. W. Serth. Source Assessment: Prioritization of Air Pollution from Industrial Surface Coating Operations. EPA-650/2-75-019-a, U.S. Environmental Protection Agency, Research Triangle Park, North Carolina, February 1975. 302 pp.

water in the gas stream (30). Because the adsorbed compounds have low vapor pressure at ambient temperatures, the recovery of organic materials present in air in small concentrations is low. The adsorption system can be operated without hazard because the vapor concentration is below the flammable range (29).

When an organic vapor in air mixture starts to pass over activated carbon, complete adsorption of the organic vapor takes place. As the adsorptive capacity of the activated carbon is approached, traces of vapor appear in the exit air, indicating that the breakpoint of the activated carbon has been reached. As the air flow is continued and although additional amounts of organic materials are adsorbed, the concentration of organic vapor in the exit air continues to increase until it equals that in the inlet air. The adsorbent is saturated under these operating conditions (29).

The adsorption of a mixture of adsorbable organic vapors in air is not uniform. The more easily adsorbed components are those with the higher boiling points. When air containing a mixture of organic vapors is passed over activated carbon, the vapors are equally adsorbed at the start. However, as the amount of the higher boiling component in the adsorbent increases, the more volatile component revaporizes. The exit vapor consists primarily of the more volatile component after the breakpoint has been reached. This process continues for each organic mixture component, until the highest boiling component is present in the exit gas. In the control of organic vapor mixtures, the adsorption cycle should be stopped when the first breakpoint occurs as determined by detection of vapors in the exit gas. Many theories have been advanced to explain the selective adsorption of certain vapors or gases. These theories are presented in Perry and Chilton (31) and will not be discussed here.

The quantities of organic vapors adsorbed by activated carbon are a function of the particular vapor in question, the adsorbent, the adsorbent temperature, and the vapor concentration. Removal of gaseous vapors by physical adsorption is practical for gases with molecular weight over 45 (31). Each type of activated carbon has its own adsorbent properties for a given vapor; the quantity of vapor adsorbed for a particular vapor concentration in the gas and at a particular temperature is best determined experimentally. The quantity of vapor adsorbed increases when the vapor concentration increases and the adsorbent temperature decreases (29).

---

(30) Hydrocarbon Pollutant Systems Study, Volume 1. Stationary Sources, Effects, and Control. Publication No. APTD-1499, U.S. Environmental Protection Agency, Research Triangle Park, North Carolina, October 1972. 377 pp.

(31) Chemical Engineers' Handbook, Fifth Edition. J. H. Perry and C. H. Chilton, eds. McGraw-Hill Book Company, New York, New York, 1973.

After breakthrough has occurred, the adsorbent is regenerated by heating the solids until the adsorbate has been removed. Low pressure saturated steam, used as the heat source for activated carbon, also acts as the carrier gas to remove the vapors released. Superheated steam at 350°C may be necessary to remove high boiling compounds and return the carbon to its original condition when high boiling compounds have reduced the carbon capacity to the point where complete regeneration is necessary (29).

Steam requirements for regeneration are a function of external heat losses and the nature of the organic material. The amount of steam adsorbed per kilogram of adsorbate, as a function of elapsed time, passes through a minimum. The carbon should be regenerated for this length of time to permit the minimum use of steam (31). After regeneration, the hot, water-saturated carbon is cooled and dried by blowing organic-free air through the carbon bed and evaporating the water. If high temperature steam has been used, other means of cooling the carbon are required.

Fixed-bed adsorbers arrayed in two or more parallel bed arrangements are used to remove organic vapors from air (see Figure 11). These are batch-type arrangements, where a bed is used until breakthrough occurs and is then regenerated. The simplest adsorber design of this type is a two-bed system where one carbon bed is being regenerated as the other is adsorbing organic vapors. In a three-bed arrangement, a greater quantity of material can be adsorbed per unit of carbon because the effluent passes through two beds in series while the third bed is being regenerated. This permits the activated carbon to be used after breakthrough since the second bed in the series removes organic vapors in the exit gas from the first bed. When the first bed is saturated, it is removed from the stream for regeneration; the bed which was used to remove the final traces of organic vapors form the effluent then becomes the new first bed; and the bed which has been regenerated becomes the second new bed (29).

The heat released in the adsorption process causes the temperature of the adsorbent to increase. If the concentration of organic vapors is not high, as in the case of room ventilators, the temperature rise is typically 10°C (29, 32).

The pressure drop through a carbon bed is a function of the gas velocity, bed depth, and carbon particle size. Activated carbon manufacturers supply empirical correlations for pressure drop in terms of these quantities. These correlations usually include pressure drop resulting from directional change of the gas stream at inlet and outlet (29).

---

(32) Air Pollution Engineering Manual, Second Edition. J. A. Danielson, ed. Publication No. AP-40, U.S. Environmental Protection Agency, Research Triangle Park, North Carolina, May 1973. 987 pp.

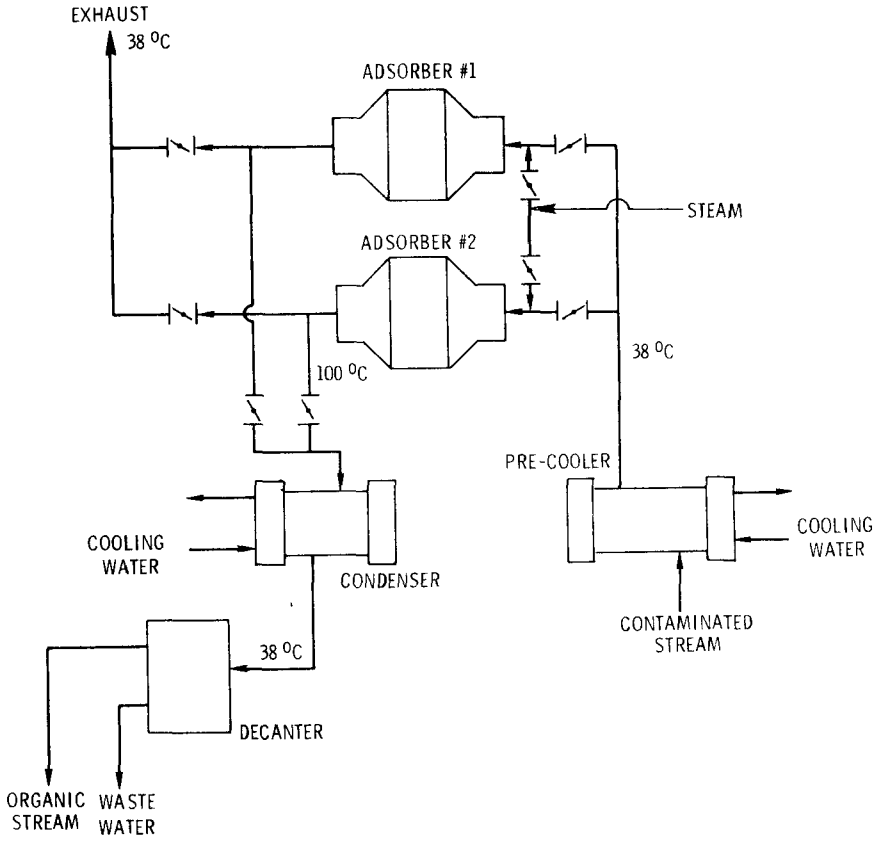

Figure 11. Carbon adsorption system (30).

Activated carbon adsorption systems have been reported in the literature. One system was installed in a latex based operation for the manufacture of gloves. The gloves were dried in a drying room to remove traces of solvent and the air from the drying room was vented into a solvent recovery system operated on 1-hr adsorbency cycles. The efficiency of the system was 72% to 73%, including collection of the vapor-laden air (33).

Absorption

Absorption is the process by which one or more soluble components are removed from a gas mixture by dissolution in a liquid. The absorption process may consist of dissolving the component in a liquid followed by reaction with a reagent, or of solution without reaction (29).

The equipment used for continuous absorption can be a tower filled with a solid packing material, an enclosure through which the gas flows and into which the liquid is sprayed, or a tower which contains a number of bubble-cap, sieve, or valve-type

(33) Solvent Recovery System Proves a Speedy Payout. Rubber World, 165(5);44, 1972.

plates. Absorption operations are carried out in a wetted-wall column (a tubular column in which the gas flows vertically through the tube and the liquid flows down over the column wall), a stirred vessel, or other type of equipment (29).

The design of absorbers has been discussed by Treybal (34) and Perry and Chilton (31). The problems which arise in designing absorbers can be attributed to variation of solubilities because of nonisothermal operating conditions, semi-ideal liquid solutions, and the change in the gas and liquid flow rates caused by transfer of the solute from the gas phase to the liquid phase.

Incineration

Thermal Incineration--

Direct-flame afterburners depend upon flame contact and high temperatures to burn the combustible material in gaseous emissions to form carbon dioxide and water (35). The combustible materials may be gases, vapors, or entrained particulate matter which contributes opacity, odor, irritants, photochemical reactivity, and toxicity to the emissions. Direct-flame afterburners consist of a refractory-lined chamber, one or more burners, temperature indicator-controllers, safety equipment, and sometimes, heat recovery equipment (35).

The afterburner chamber consists of a mixing section, which provides contact between the contaminated gases and the burner flame and a combustion section, which provides high velocity flow to create turbulence. The combustion section has a retention time of 0.3 s to 0.5 s for completion of the combustion process. Afterburner discharge temperatures range from 540°C to 800°C, depending on the air pollution problem. Higher temperatures result in higher afterburner efficiencies (35).

The gas burners used in afterburners are of the nozzle-mixing, premixing, multiport, or mixing plate type. Burner placement varies depending on burner type and on the necessity of providing intimate contact of the contaminated air with the burner flames. When all the contaminated air passes through the burner, maximum afterburner efficiency is obtained (35).

Nozzle-mixing and premixing burners are arranged to fire tangentially into a cylindrical afterburner. Several burners or nozzles are required to ensure complete flame coverage, and additional burners or nozzles may be arranged to fire along the

---

(34) Treybal, R. E. Mass Transfer Operations. McGraw-Hill Book Company, New York, New York, 1968. 666 pp.

(35) Rolke, R. W., R. D. Hawthorne, C. R. Garbett, E. R. Slater, and T. T. Phillips. Afterburner Systems Study. EPA-R2-72-062, U.S. Environmental Protection Agency, Research Triangle Park, North Carolina, August 1972. 336 pp.

length of the burner. Air for fuel combustion is taken from the outside air or from the contaminated air stream, which is introduced tangentially or along the major axis of the cylinder (35).

Multiport burners are installed across a section of the afterburner separate from the main chamber. Although all air for combustion is taken from the contaminated air stream, multiport burners are not capable of handling all of the contaminated air stream. Contaminated air in excess of that used for fuel combustion must be passed around the burner and mixer with the burner flames in a restricted and baffled area (35).

Mixing plate burners were developed for afterburner applications, and are placed across the inlet section of the afterburner. The contaminated air and the burner flames are mixed by profile plates installed around the burner between the burner and afterburner walls. The high velocities (1 m/s) provided by the burner and profile plate design ensure mixing of the burner flames and the contaminated air not flowing through the burner. The contaminated air stream provides air for fuel combustion (35).

The efficiency of an afterburner is a function of retention time, operating temperatures, flame contact, and gas velocity. No quantitative mathematical relationship between these variables exists because the kinetics of the combustion process are complex, and flow inside afterburners is not defined. However, for good design, the following observations can be made with respect to afterburner efficiency (35):

- Efficiency increases with increasing afterburner operating temperature.
- Efficiency decreases if the contaminated gases entering the afterburner are excessively preheated.
- Efficiency increases with increasing contact between the contaminated gases and the burner flames.
- Efficiency increases with increasing retention time for retention times less than one second.
- Efficiency is a function of the afterburner design and the inlet concentration of organic materials.
- Ninety percent afterburner efficiency is difficult to reach below a 700°C operating temperature if the generation of carbon monoxide in the afterburner is included.

An example of the application of direct-flame incineration to a plant is reported in the literature (36). A foam products manu-

---

(36) Sandomirsky, A. G., D. M. Benforado, L. D. Grames, and C. E. Pauletta. Fume Control in Rubber Processing by Direct-Flame Incineration. Journal of the Air Pollution Control Association, 16(12):673-676, 1966.

manufacturing plant operated a curing oven which exhausted a stream containing an oil aerosol to the atmosphere. A direct-flame incinerator with heat recovery equipment was installed. The incinerator used No. 2 fuel oil as a supplementary fuel. At a system flow of 14 metric tons/hr and an incineration temperature of 600°C total hydrocarbons were reduced from 1,305 ppm (by weight) to 207 ppm, an efficiency of 84%. Allowing for the contribution of fuel oil, the efficiency becomes 89%. In another run at a temperature of 640°C, total hydrocarbons were reduced from 1,055 ppm (by weight), to 89 ppm, for an efficiency of 92%. Again allowing for the contribution of the fuel oil, the efficiency becomes 97% (36).

Catalytic Incineration--
A catalytic afterburner contains a preheat burner section, a chamber containing a catalyst, temperature indicators and controllers, safety equipment, and heat recovery equipment. The catalyst in such an afterburner (shown in Figure 12) promotes combustion by increasing the rate of the oxidation reactions without itself appearing to change chemically (29).

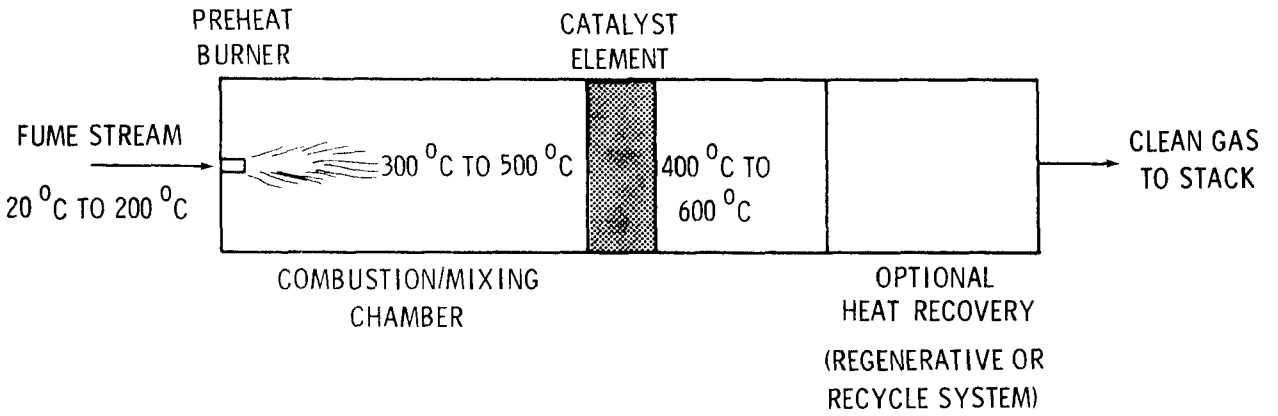

Figure 12. Catalytic afterburner (35).

The contaminated air entering a catalytic afterburner is heated to the temperature necessary for the catalytic combustion. The preheat zone temperature, in the range of 340°C to 600°C, varies with the combustion and type of contaminants. Because of thermal incineration in the preheat zone, the preheat burner can contribute to the efficiency of a catalytic afterburner (29).

Catalysts used for catalytic afterburners may be platinum-family metals supported on metal or matrix elements made of ceramic honeycombs. Catalyst supports should have high geometric surface area low pressure drop, structural integrity and durability, and should permit uniform distribution of the flow of the waste stream through the catalysts. Catalysts can be poisoned by phosphorus, bismuth, arsenic, antimony, mercury, lead, zinc, and tin, which are thought to form alloys with the metal catalyst.

Catalysts are deactivated by materials which form coatings on them, such as particulate material, resins, and the carbon formed during organic material breakdown. High temperatures will also deactivate catalysts. Because the combustion reaction is exothermic, the catalyst bed temperature is above the inlet temperature. The temperature increase depends on the concentration of organic material burned and the heat of combustion of that material. Compensation for decreased catalyst activity can be made by 1) initial overdesign in specifying the quantity of catalyst required to attain required performance, 2) increasing preheat temperature as chemical activity decreases, 3) regenerating the catalyst, and 4) replacing the catalyst (29).

The quantity of catalyst required for 85% to 95% conversion of hydrocarbons ranges from 0.5 m^3 to 2 m^3 of catalyst per 1,000 m^3/min of waste stream. Although the catalyst temperature depends on the hydrocarbon burned and the condition of the catalyst, the operating temperature of catalytic afterburners ranges from 260°C to 540°C (35).

Vapor Condensation

Organic compounds can be removed from an air stream by condensation. A vapor will condense at a given temperature when the partial pressure of the compound is equal to or greater than its vapor pressure. Similarly, if the temperature of the gaseous mixture is reduced to the saturation temperature (i.e., the temperature at which the vapor pressure equals the partial pressure of one of the constituents), the material will condense. Thus, either increasing the system pressure or lowering the temperature can cause condensation. In most air pollution control applications, decreased temperature is used to condense organic materials, since increased pressure is usually impractical (37).

The equilibrium partial pressure limits the control of organic emissions by condensation. As condensation occurs, the partial pressure of material remaining in the gas decreases rapidly, preventing complete condensation. For example, at 0°C and atmospheric pressure, a gas stream saturated with toluene would still contain about 8,000 ppm of that gas. Thus, a condenser must usually be followed by a secondary air pollution control device such as an afterburner (37).

---

(37) Control Techniques for Hydrocarbons and Organic Solvent Emissions from Stationary Sources. Publication No. AP-68, U.S. Department of Health, Education, and Welfare, Washington, D.C., March 1970. 113 pp.

PARTICULATE

Wet Scrubbing

Wet scrubbers use a liquid (e.g., water) either to remove particulate matter directly from the gas stream by contact or to improve collection efficiency by preventing reentrainment. The mechanisms for particle removal are 1) fine particles are conditioned to increase their effective size, enabling them to be collected more easily and 2) the collected particles are trapped in a liquid film and washed away, reducing reentrainment (38).

The effective particle size may be increased in two ways. First, fine particles can act as condensation nuclei when the vapor passes through its dew point. Condensation can remove only a relatively small amount of dust, since the amount of condensation required to remove high concentrations is usually prohibitive. Second, particles can be trapped on liquid droplets by impact using inertial forces. The following six mechanisms bring particulate matter into contact with liquid droplets (38):

> Interception occurs when particles are carried by a gas in streamlines around an obstacle at distances which are less than the radius of the particles.
>
> Gravitational force causes a particle, as it passes an obstacle, to fall from the streamline and settle on the surface of the obstacle.
>
> Impingement occurs when an object placed in the path of a particle-containing gas stream causes the gas to flow around it. The larger particles tend to continue in a straight path because of inertia and may impinge on the obstacle and be collected.
>
> Diffusion results from molecular collisions and, hence, plays little part in the separation of particles from a gas stream.
>
> Electrostatic forces occur when particles and liquid droplets become electrically charged.
>
> Thermal gradients are important to the removal of matter from a particle-containing gas stream because particulate matter will move from a hot area to a cold area. This motion is caused by unequal gas molecular collision energy on the hot and cold surfaces of the particles and is directly proportional to the temperature gradient.

---

(38) Control Techniques for Particulate Air Pollutants. Publication No. AP-51, U.S. Department of Health, Education, and Welfare, Washington, D.C., January, 1969. 241 pp.

Wet scrubber efficiencies are compared on the bases of contacting power and transfer units. Contacting power is the useful energy expended in producing contact of the particulate matter with the scrubbing liquid. The contacting power represents pressure head loss across the scrubber, head loss of the scrubbing liquid, sonic energy, or energy supplied by a mechanical rotor. The transfer unit (the numerical value of the natural logarithm of the reciprocal of the fraction of the dust passing through the scrubber) is a measure of the difficulty of separation of the particulate matter (38).

Spray Chamber--
The simplest type of wet scrubber is the spray chamber, a round or rectangular chamber into which water is sprayed either cocurrently, countercurrently, or crosscurrently to the gas stream. Liquid droplets travel in the direction of liquid flow until inertial forces are overcome by air resistance. Large droplets settle under the influence of gravity, while smaller droplets are swept along by the gas stream. These droplets and particulate matter may then be separated from the gas stream by gravitational settling, impaction on baffles, filtration through shallow packed beds, or by cyclonic action (38).

Gravity Spray Tower--
In the gravity spray tower, liquid droplets fall downward through a countercurrent gas stream containing particulate matter. To avoid droplet entrainment, the terminal settling velocity of the droplets is greater than the velocity of the gas stream. Collection efficiency increases with decreasing droplet size and with increasing relative velocity between the droplets and air stream. Since these two conditions are mutually exclusive, there is an optimum droplet size for maximum efficiency: from 500 μm to 1,000 μm (38).

Centrifugal Spray Scrubbers--
The centrifugal spray scrubber (Figure 13), an improvement on the gravity spray tower, increases the relative velocity between the droplets and gas stream by using the centrifugal force of a spinning gas stream. The spinning motion may be imparted by tangential entry of either the liquid or gas streams or by the use of fixed vanes and impellers (38).

Impingement Plate Scrubbers--
An impingement plate scrubber (Figure 14) consists of a tower equipped with one or more impingement stages, mist removal baffles and spray chambers. The impingement stage consists of a perforated plate that has from 6,500 to 32,000 holes/m^2 and a set of impingement baffles arranged so that a baffle is located above every hole. The perforated plate has a weir for control of its liquid level. The liquid flows over the plate and through a downcomer to a sump or lower stage. The gas enters the lower sector of the scrubber and passes up through a spray zone created by a series of low pressure sprays. As the gas passes through

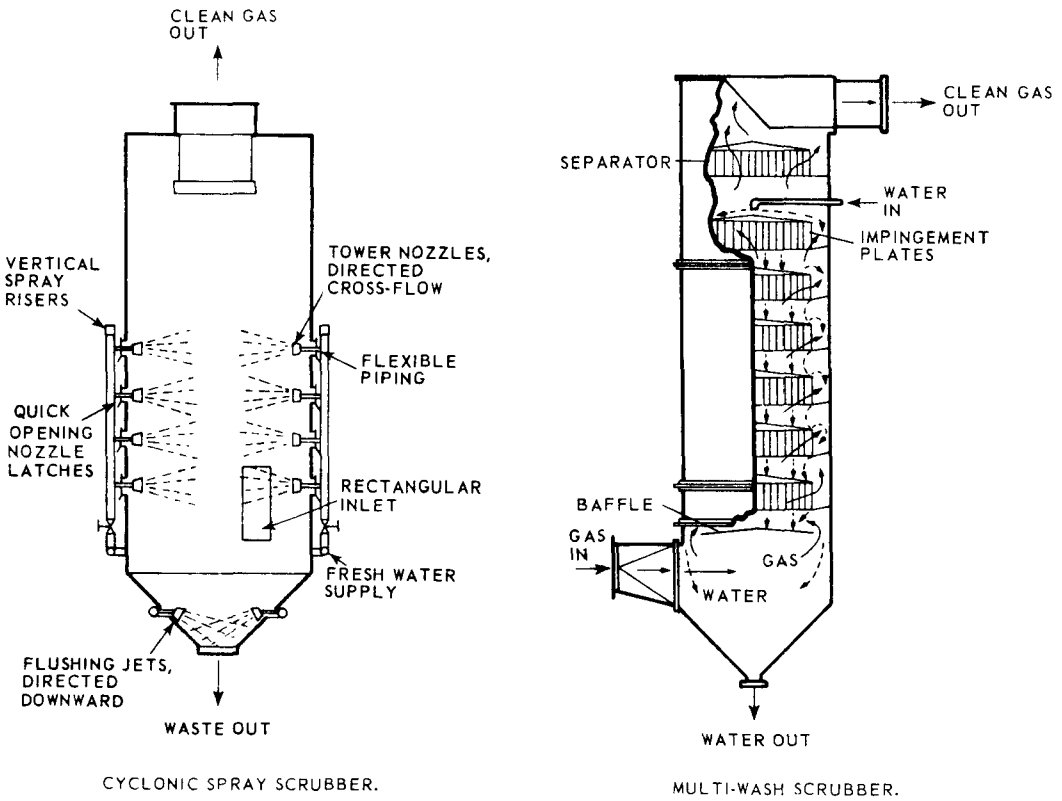

Figure 13. Centrifugal spray scrubbers (38).

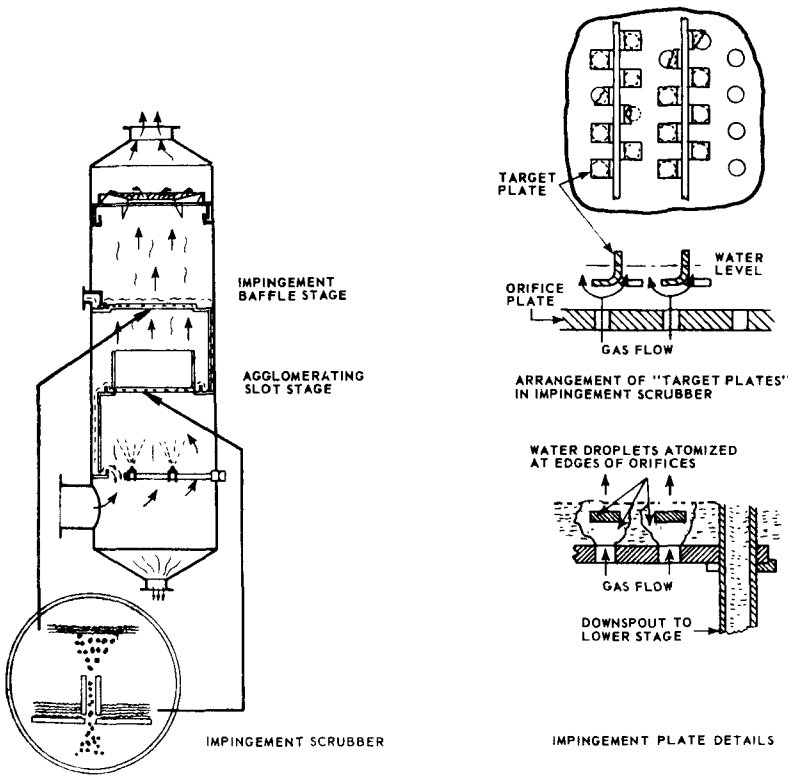

Figure 14. Impingement plate scrubber (38).

the impingement stage, the high gas and particle velocity (2.25 m/s to 3 m/s) atomizes the liquid at the edges of perforations. The spray droplets, about 10 μm in diameter, increase fine dust collection (38).

Venturi Scrubbers--
High collection efficiency of fine particles by impingement requires small obstacle diameter and high relative velocity of the particle as it impinges on the obstacle. Venturi scrubbers (Figure 15) accomplish this by introducing the scrubbing liquid at right angles to a high velocity gas flow in the throat of a venturi where the velocity of the gas alone causes the disintegration of the liquid. Another factor which affects the efficiency of a venturi scrubber is the conditioning of the particles by condensation. If the gas in the reduced pressure region in the throat is saturated or supersaturated, the Joule-Thompson effect will cause condensation. This helps the particles to grow, and the wetness of the particle surface helps agglomeration and separation (38).

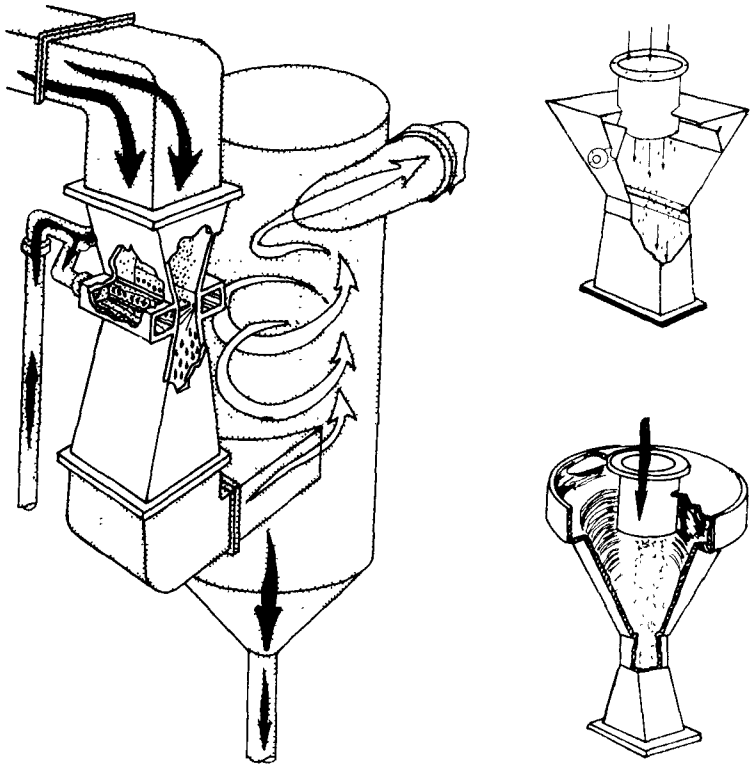

Figure 15. Venturi scrubber (38).

Packed Bed Scrubbers--
Packed bed scrubbers (Figure 16) are similar to the packed bed absorbers discussed previously. The irrigating liquid serves to wet, dissolve, and/or wash the entrained particulate matter from the bed. In general, smaller-diameter tower packing gives a

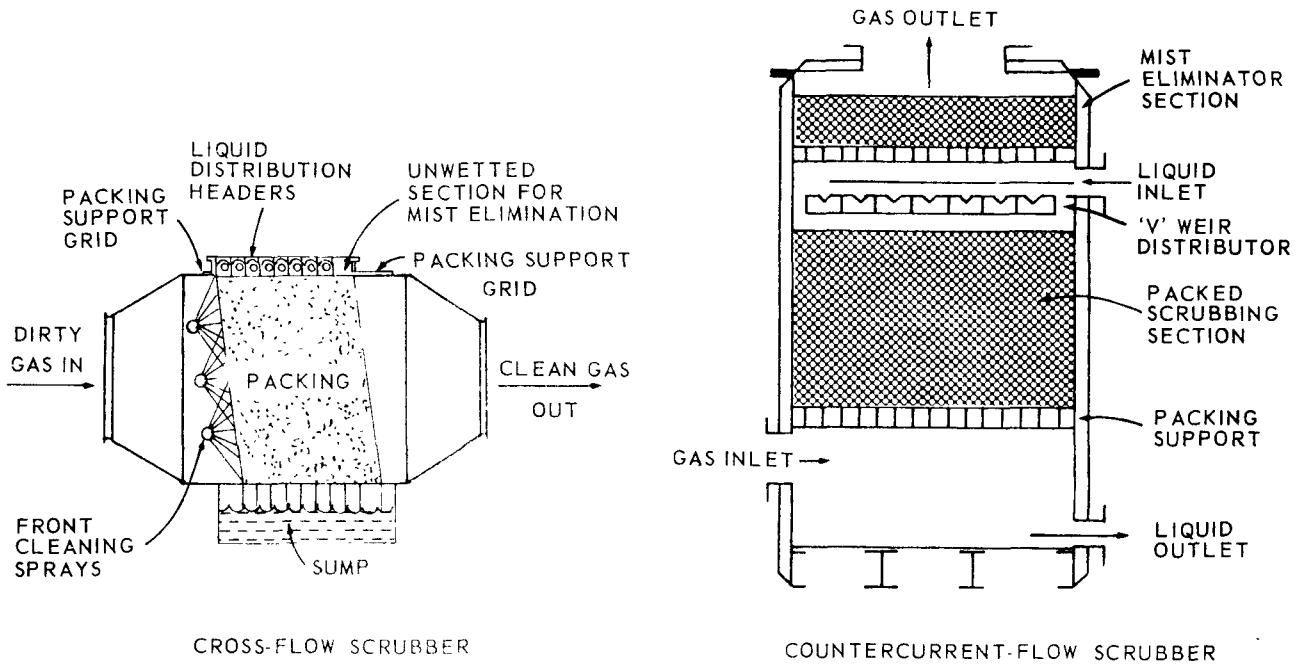

Figure 16. Packed scrubbers (38).

higher particle target efficiency than larger-size packing for a given gas velocity (38).

Self-Induced Spray Scrubbers--
The Self-induced spray scrubber uses a spray curtain for particle collection. The spray curtain is induced by gas flow through a partially submerged orifice or streamlined baffle. Baffles or swirl chambers are used to minimize mist carryover. The chief advantage of the self-induced spray scrubber is its ability to handle high dust concentrations and concentrated slurries (38).

Mechanically Induced Spray Scrubbers--
Mechanically induced spray scrubbers use high velocity sprays generated at right angles to the direction of gas flow by a partially submerged rotor. Scrubbing is achieved by impaction of both high radial droplet velocity and vertical gas velocity. Advantages are the relatively low liquid requirements, small space requirements, high scrubbing efficiency, and high dust load capacity. The rotor, however, is susceptible to erosion from large particles and abrasive dusts (38).

Disintegrator Scrubber--
A disintegrator scrubber consists of a barred rotor with a barred stator. Water is injected axially through the rotor shaft and is separated into fine droplets by the high relative velocity of rotor and stator bars. Advantages of this scrubber are high efficiency for submicron particles and low space requirements. The primary disadvantage is its large power requirement (38).

Inline Wet Scrubber--
In the axial-fan-powered gas scrubber, a water spray and baffle screen wet the particles, and centrifugal fan action eliminates the wetted particles through concentric louvers. Advantages are low space requirements and low installation costs (38).

Irrigated Wet Filters--
Irrigated wet filters consist of an upper chamber, containing wet filters and spray nozzles for cleaning the gas, and a lower chamber for storing scrubbing liquid. Liquid is recirculated and sprayed into the surface of the filters on the upstream side of the bed. Two or more filter stages are used in series (38).

Fabric Filtration

Fabric filters use a filter medium to separate particulate matter from a gas stream. Two types of fabric filters are in use--high energy cleaned collectors and low energy cleaned collectors (39).

High Energy Collectors--
High energy collectors use pulse jets to clean the filter medium, a felt fabric which is kept as clean as possible (39). The pulse jet is based on the use of an air ejector for dislodging dust from the bags. The ejector produces a short pulse of compressed air in the direction opposite to that of the gas being filtered. The jet must accomplish three things (40):

- Stop the normal filtering flow.
- Transmit a burst of air to the filtration medium, giving it a vibratory shock.
- Create enough pressure in the bag to ensure a reversal of flow from the clean side to the dirty side of the bag.

Low Energy Collectors--
Low energy collectors use shaking or reverse air flow methods of cleaning. The filter base is a woven cloth that acts as a site on which the true filter medium, or dust cake, can build up (39).

Mist Eliminators

Mists are liquid aerosols (collections of extremely small liquid particles suspended in an air stream). Incineration, one of three methods for controlling mists, has already been discussed. Another technique is scrubbing, but unless high energy scrubbers are used, extremely fine mist will not be collected. The third

---

(39) Frey, R. E. Types of Fabric Filter Installations. Journal of the Air Pollution Control Association, 24(12):1148-1149, 1974.

(40) Bakke, E. Optimizing Filter Parameters. Journal of the Air Pollution Control Association, 24(12):1150-1154, 1974.

method of controlling mists is with mist eliminators, of which there are four types (41).

Wet Fiber Mist Eliminator--
Wet fiber mist eliminators depend upon two mechanisms, Brownian diffusion and inertial impaction, to separate mist and dust particles from air streams. Brownian diffusion dominates when filter beds have large specific surface areas, gas velocities range from 1.5 m/min to 9.0 m/min, and the mist consists largely of submicron-sized particles. A characteristic of such equipment is that collection efficiency increases with decreasing gas velocity because of increased filter bed retention time. Brownian motion is an important factor in particle capture by direct interception (38).

Inertial impaction dominates in collection of particles above 3 μm in size at gas velocities in excess of 9 m/s in coarse filter beds. Inertial impaction efficiency increases with increasing gas velocity (38).

Wetted filters are available in two designs, low velocity (1.5 m/min to 9 m/min) and high velocity (9 m/min to 27 m/min). The low velocity design consists of a packed bed of fibers between two concentric screens as shown in Figure 17. Mist particles collect on the surface of the fibers, coalesce to form a liquid that wets the fibers, and are moved horizontally and downward by gravity and the drag of the gases. The liquid flows down the inner screen to the bottom of the element to a collection reservoir. Collection efficiencies are greater than 99% for particles smaller than 3 μm in diameter (38).

The high velocity filter consists of a packed fiber bed between two parallel screens. Liquid flow patterns are similar to those of the low velocity filter, and removal efficiencies range from 85% to 90% for 1 μm to 3 μm particles (38).

Impingement Baffle Mist Eliminator--
Baffle mist eliminators are used to control large diameter solid and liquid particles. Mist removal efficiencies of 95% may be acheived for 40 μm spray droplets up to a maximum gas velocity of 7.6 m/s. Higher gas velocities result in re-entrainment of the liquid droplets (38).

Vane-Type Mist Eliminators--
Vane-type mist eliminators have an operating range of 3 m/s to 15 m/s with collector efficiences as high as 99% for 11-μm particles. The principal advantage of the vane-type mist

---

(41) Farkas, M. D. Mist Abatement from Plastics Processing Operations. In: Plastics and Ecology - Influence on Pollution, Flammability, and Safety, Proceedings of the Regional Technical Conference, The Society of Plastics Engineers, Inc., Cherry Hill, New Jersey, October 1970. pp. 9-13.

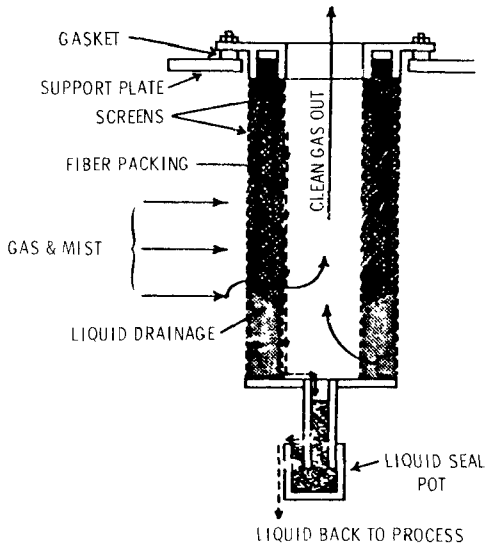

Figure 17. Wet-fiber mist eliminator (41).

eliminator over the baffle type is the wider range of operation at comparable removal efficiencies (38).

Packed Bed Mist Eliminators--
Packed beds can also be used as mist eliminators. Removal efficiencies range up to 65% at gas velocities of 2 m/s to 3 m/s. Mist re-entrainment occurs at higher gas velocities (38).

SECTION 6

GROWTH AND NATURE OF THE INDUSTRY

For the period 1971 through 1976, plastic resins consumption in the United States grew at a rate of approximately 8.5% annually, from 7.91 x 10^6 metric tons in 1971 to 11.9 x 10^6 metric tons in 1976. Although consumption in 1976 increased more than 24% over that of 1975, the apparently vigorous growth by the plastics industry is lessened by the fact that 1975 sales were the lowest since 1971. Feedstock shortages, legislative restraints, and the general slowdown of the American economy during 1975 were the probable causes of the intervening decline in plastics consumption.

Future growth of the plastics processing industry will be governed by a complex set of interrelated variables, including, but not limited to, feedstock availability and cost, future facility expansion and cost, cost of meeting environmental restrictions, cost of competitive materials, and the emergence of new marketing areas. The information presented in this section does not attempt to account for all of these variables; such as endeavor is beyond the scope of this document.

Estimated growth patterns for the period 1976 to 1981 were determined from the literature for all but one plastic type. For reinforced thermoplastics, 1981 consumption was estimated from historic growth records.

Table 12 (26, 42-47) shows yearly consumption of 15 plastic resins for the period 1969 through 1976, average annual growth

---

(42) The Statistics for 1970. Modern Plastics, 48(1):65-77, 1971.

(43) Materials and Market Statistics for 1971. Modern Plastics, 49(1):41-50, 1972.

(44) Everything's Coming Up Roses, Thorns and All. Modern Plastics, 50(1):52-63, 1973.

(45) Materials and Market Statistics for '73. Modern Plastics, 51(1):38-47, 1974.

(46) Goodbye, Resin Shortage? Don't You Belivve It! Modern Plastics, 52(1):44-56, 1975.

(47) The Slow Road Back. Modern Plastics, 53(1):38-51, 1976.

TABLE 12. PLASTICS CONSUMPTION AND ESTIMATED GROWTH (26, 42-47)

Plastic type	Annual domestic consumption, 10^3 metric tons								Average annual growth rate, 1971 to 1976, %	Estimated average annual growth rate, 1976 to 1981, %	Estimated 1981 consumption, 10^3 metric tons
	1969	1970	1971	1972	1973	1974	1975	1976			
Acrylic	160	175	185	208	233	246	193	222	3.7	6.2	300
Cellulosic	89	75	68	75	77	76	56	70	0.6	5.9	93
Epoxy	73	62	62	74	90	97	77	100	10.0	7.9	150
Nylon	41	46	53	62	78	75	61	88	10.7	8.5	130
Phenolic	510	488	531	638	612	579	456	590	2.1	8.9	900
Polyacetal	25	28	25	26	31	32	26	39	9.3	9.9	63
Polycarbonate	14	18	20	25	46	51	40	51	20.6	10	82
Polyester[a]	495	402	473	575	653	634	556	691	7.9	9.8	1,100
Polyethylene	2,071	2,321	2,407	3,138	3,599	3,668	2,953	3,640	8.6	7.0	5,100
Polypropylene	401	392	517	668	874	901	768	1,008	14.3	15	2,000
Polystyrene and styrene copolymer	1,441	1,496	1,274	2,012	2,235	2,095	1,737	2,112	10.6	5.9	2,800
Polyurethane foam[b]	357	324	414	493	593	624	614	738	12.3	9.4	1,200
Polyvinyl chloride and copolymer	1,227	1,287	1,496	1,902	2,085	2,006	1,629	2,029	6.3	9.5	3,200
Reinforced thermoplastics	26	27	30	40	55	62	54	69	18.1	18.1[c]	160
Urea and melamine	303	246	353	406	477	435	360	439	4.5	5.4	570
TOTAL	7,230	7,390	7,910	10,300	11,700	11,600	9,580	11,900	8.5	8.4	17,800

[a] Includes reinforced polyesters.

[b] Excludes thermoplastic polyurethane.

[c] Estimated growth pattern not available in the literature; growth rate was therefore estimated at pre-1976 value.

rates for the same period, estimated average growth rates for the period 1976 through 1981, and estimates of 1981 consumption based on 1976 consumption and projected growth. Figure 18 presents this information in graphic form.

The following paragraph briefly describes the growth and nature of those plastics listed in Table 12.

ACRYLIC

The 1976 consumption of acrylics was 2.22 x 10^5 metric tons, about 15% higher than in 1975, but still not up to the record level of 1974. Primary 1976 markets were construction and transportation. An estimated annual growth rate of 6.2% from 1976 to 1981 will yield 3.0 x 10^5 metric tons of acrylics consumed in 1981 (48).

CELLULOSIC

The 1976 consumption of cellulosics was 7.0 x 10^4 metric tons, 25% higher than that of 1975, but about 8% lower than that of 1974. The average annual growth rate of cellulosics consumption from 1971 to 1976 was only 0.6%, and future growth is likely to be hindered by limited capacity, economics and ecological factors having recently caused a cutback in chemical-grade cellulosic production. With an estimated growth rate of 5.9%/yr for 1976 to 1981, cellulosics consumption will reach 9.3 x 10^4 metric tons by the end of that period (48).

EPOXY

At 1.00 x 10^5 metric tons, the 1976 epoxy resins consumption was 30% higher than that of 1975 and 3% higher than that of 1974. Epoxy resin consumption should reach nearly 1.5 x 10^5 metric tons by 1981, assuming an average annual growth rate of 7.9% (48). Coating (both solvent- and powder-bond), fabricating, and reinforced resin applications are expected to be the leading epoxy markets of the near future.

NYLON

The consumption of nylon resins was 8.8 x 10^4 metric tons in 1976, up 44% from 1975 and 17% from 1974. Nylon is currently in ample supply due to improved raw materials availability and reduced demand for textile fibers and other nylon markets (49). Future markets in electronics, machinery, and mineral-filled

---

(48) The Outlook: 1970-1980. Modern Plastics, 47(1):97-102, 1970.

(49) Supply Status Report No. 10: Nylons. Modern Plastics, 52(2):52, 1975.

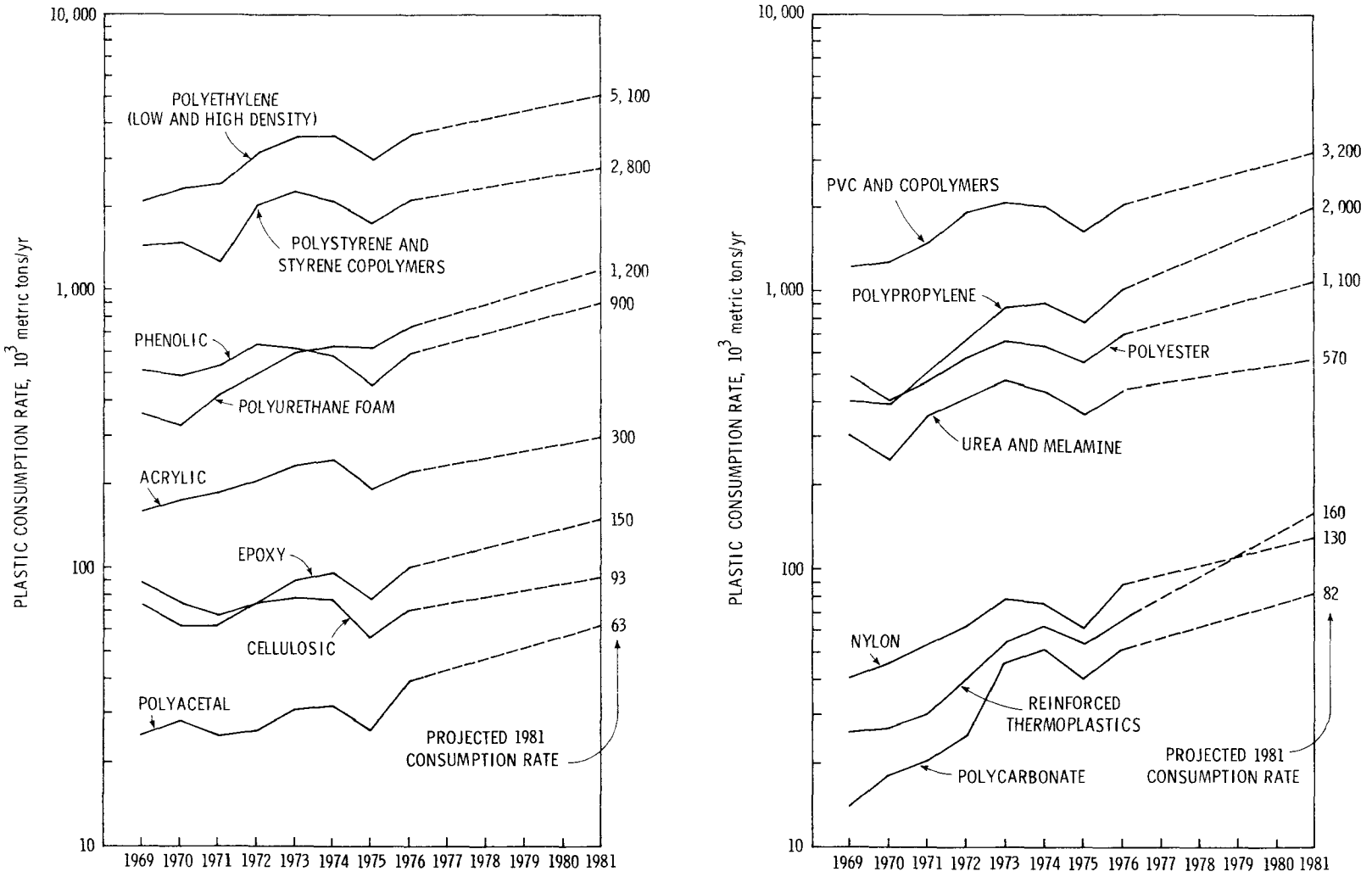

Figure 18. Projected growth of plastics consumption.

materials look promising, and an estimated average growth rate of 8.5%/yr should yield nylon resins consumption of more than 13×10^4 metric tons in 1981 (48).

PHENOLIC

Phenolic consumption in 1976 was 590,000 metric tons, 29% higher than that of 1975, but only 2% higher than that of 1974. Growth of phenolics consumption will be limited for several years by phenol production capacity (50). An average annual growth rate of 8.9% will lift consumption of phenolic to 900,000 metric tons in 1981, construction and appliances being the major market areas (51).

POLYACETAL

Polyacetal resins showed the greatest percentage change of all 15 plastic types discussed here, increasing from 26,000 metric tons in 1975 to 39,000 metric tons in 1976. Textile equipment and other machinery parts are the only growing applications for polyacetal (46). An optimistic yearly growth rate of 9.9% yields 1981 consumption of polyacetal resins totalling 63,000 metric tons (48).

POLYCARBONATE

Polycarbonate consumption was 5.1×10^4 metric tons in 1976, approximately 28% higher than that of 1975 and equal to that of 1974. Glazing for housing applications and packaging are the two most favorable market areas for polycarbonate (47). An estimated annual growth rate of 10%, considerably less than the 20% experienced from 1971 to 1976, means that 8.2×10^4 metric tons of polycarbonate resins will be consumed in 1981 (48).

POLYESTER

The 1976 consumption of polyester resins, 6.91×10^5 metric tons, was 24% higher than that of 1975. Consumption is expected to grow at an average rate of 9.8% through 1981, faster than the historical pattern of 1971 to 1976, but slower than might be the case were it not for anticipated materials shortages (48). The expected 1981 consumption of polyester resins is 11×10^5 metric tons.

---

(50) Supply Status Report No. 6: Phenolics. Modern Plastics, 51(10):64, 1974.

(51) From Now On, Plastics Supply Will Be Just About In Balance With Demand. Modern Plastics, 52(10):40-43, 1975.

POLYETHYLENE

The 1976 consumption of high-density and low-density polyethylene was 3.64 x 10^6 metric tons, the largest in the plastics industry. Polyethylene is expected to exhibit a modest growth rate of 7.0% in the near future, for a 1981 consumption level of 5.1 x 10^6 metric tons (51). Film and injection-molded products are expected to continue to lead LDPE consumption, while blow-molded and injection-molded shapes should maintain a large share of the HDPE market (52, 53).

POLYPROPYLENE

Polypropylene consumption of 1.008 x 10^6 metric tons in 1976, having increased approximately 12% over the 1974 level, showed the best recovery of all the "volume" resins. This trend is expected to continue, as the installation of new polymer capacity should support the estimated average annual growth rate of 15% (51, 54). Packaging, fibers, and molded appliances are the products that will lead the way to a 1981 polypropylene consumption of 2.0 x 10^6 metric tons (54).

POLYSTYRENE AND STYRENE COPOLYMERS

The 1976 consumption of polystyrene and styrene copolymers was 2.112 x 10^6 metric tons, more than 20% higher than that of 1975, but still less than the record level of 2.235 x 10^6 metric tons in 1973. Growth of styrenic resin consumption should average 5.9% from 1976 to 1981, although benzene availability may be a limiting factor (51, 55). Packaging, disposable goods, and furniture appear to be the expanding market areas for polystyrene in the years ahead (48). In 1981, the total consumption of styrene resins for plastics products should exceed 2.8 x 10^6 metric tons.

POLYURETHANE FOAM

Polyurethane foam consumption was 738,000 metric tons in 1976, 20% greater than that of 1975. Both rigid and flexible foams should continue to grow in usage, especially with the development of new markets in transportation, furniture, packaging, and construction (51). The 1981 consumption of polyurethane should be about

---

(52) Supply Status Report No. 3: HDPE. Modern Plastics, 51(7):52, 1974.

(53) Supply Status Report No. 4: LDPE. Modern Plastics, 51(8):42, 1974.

(54) Supply Status Report No. 5: Polypropylene. Modern Plastics, 51(9):78, 1974.

(55) Supply Status Report No. 2: Styrenics. Modern Plastics 51(6):66, 1974.

1.2×10^6 metric tons, assuming an average annual growth rate of 9.4% (48).

POLYVINYL CHLORIDE AND COPOLYMERS

Consumption of polyvinyl chloride and copolymers in 1976 was 2.029×10^6 metric tons, an increase of nearly 25% over the level of 1974. New vinyl chloride monomer (VCM) feedstock and polymer production facilities should help polyvinyl chloride consumption to grow at 9.5%/yr, to a 1981 level of 3.2×10^6 metric tons (51). Pipe and other construction-related areas will probably be the dominant markets for PVC in the future (51).

REINFORCED THERMOPLASTICS

In 1976, consumption of reinforced thermoplastics was 69,000 metric tons, 25% higher than in 1975 and 11% higher than in 1974. The most promising application for reinforced thermoplastics is automobile parts. Extrapolating the 18.1% annual growth rate of 1971 to 1976, consumption of reinforced thermoplastics is estimated to be 160,000 metric tons.

UREA AND MELAMINE

At 439,000 metric tons, 1976 consumption of urea-formaldehyde and melamine-formaldehyde resins was 22% greater than that of 1975. Growth in the consumption of amino resins for plywood adhesives is a good possibility, provided that the slump in the U.S. construction industry comes to an end (48). However, excessive growth in the construction sector may put undue pressure on feedstock supplies, forcing some producers of urea and melamine to other plastics (56). An optimistic average annual growth rate of 5.4% would yield a 1981 consumption of 570,000 metric tons of urea and melamine (48).

---

(56) Supply Status Report No. 7: Urea and Melamine. Modern Plastics, 51(11):59, 1974.

REFERENCES

1. Bernhardt, E. C., and J. M. McKelvey. Polymer Processing-New Engineering Specialty. Modern Plastics, 35(10):44-45, 1958.

2. 1972 Census of Manufactures, Volume II-Industry Statistics, Part 2-SIC Major Groups 27-34. U.S. Department of Commerce, Washington, D.C., August 1976. pp. 30A-1 through 30A-14.

3. Ott, E. Cellulose and Cellulose Derivatives. John Wiley and Sons, Inc., New York, New York, 1955. 1601 pp.

4. Travis, G. Cellulosic. Modern Plastics, 50(10A):34-36, 1973.

5. Terry, H., and S. Nagy. System Analysis of Air Pollutant Emissions from the Chemical/Plastics Industry. EPA-650/2-74-106, U.S. Environmental Protection Agency, Research Triangle Park, North Carolina, October 1974. 281 pp.

6. Odian, G. Principles of Polymerization. McGraw-Hill Book Company, New York, New York, 1970. 652 pp.

7. Sherman, S. Epoxy. Modern Plastics, 50(10A):36-40, 1973.

8. Hull, M. E. Phenolic. Modern Plastics, 50(10A):52-56, 1973.

9. Martin, R. W. The Chemistry of Phenolic Resins. John Wiley and Sons, Inc., New York, New York, 1956. 298 pp.

10. Encyclopedia of Polymer Science and Technology, Vol. 12. John Wiley and Sons, Inc., New York, New York, 1970. p. 32.

11 O'Neill, C. T. Amino. Modern Plastics, 52(10A):14-16, 1975.

12. Encyclopedia of Polymer Science and Technology, Vol. 1. John Wiley and Sons, Inc., New York, New York, 1964. pp. 482-502.

13. Plastics Sales Data, 1976 vs. 1975: Back Over the 13,000,000-Ton Mark. Modern Plastics, 54(1):49-52, 1977.

14. Encyclopedia of Polymer Science and Technology, Vol. 3. John Wiley and Sons, Inc., New York, New York, 1967. pp. 765-830.

15. Encyclopedia of Polymer Science and Technology, Vol. 6. John Wiley and Sons, Inc., New York, New York, 1967. pp. 466-467.

16. Plastics Engineering Handbook of The Society of the Plastics Industry, Inc., Third Edition. A. F. Randolph, ed. Reinhold Publishing Corporation, New York, New York, 1960. 565 pp.

17. Encyclopedia of Polymer Science and Technology, Vol. 8. John Wiley and Sons, Inc., New York, New York, 1968. p. 555.

18. Encyclopedia of Polymer Science and Technology, Vol. 6. John Wiley and Sons, Inc., New York, New York, 1967. pp. 764-775.

19. Hager, J. E. Polyethylene Film and Sheet. Modern Plastics, 52(10A):138, 1975.

20. Smith, D. E. Casting of PVC Film. Modern Plastics, 52(10A):266, 1975.

21. Gambina, H. J., Jr. Casting of Acrylics. Modern Plastics, 52(10A):263-264, 1975.

22. Encyclopedia of Polymer Science and Technology, Vol. 15. John Wiley and Sons, Inc., New York, New York, 1971. pp. 445-479.

23. Encyclopedia of Polymer Science and Technology, Vol. 8. John Wiley and Sons, Inc., New York, New York, 1968. pp. 121-148.

24. Muller, G. J. Industrial Laminates. Modern Plastics, 52(10A):153-158, 1975.

25. Encyclopedia of Polymer Science and Technology, Vol. 9. John Wiley and Sons, Inc., New York, New York, 1968. pp. 1-157.

26. The World Almanac and Book of Facts 1976. G. E. Delury, ed. Newspaper Enterprise Association, Inc., New York, New York, 1975. 984 pp.

27. Aerometric and Emissions Reporting System (AEROS), U.S. Environmental Protection Agency, National Air Data Branch, Research Triangle Park, North Carolina.

28. Eimutis, E. C., and R. P. Quill. Source Assessment: State-by-State Listing of Criteria Pollutant Emissions. EPA-600/2-77-107b, U.S. Environmental Protection Agency, Research Triangle Park, North Carolina, July 1977. 138 pp.

29. Hughes, T. W., D. A. Horn, C. W. Sandy, and R. W. Serth. Source Assessment: Prioritization of Air Pollution from Industrial Surface Coating Operations. EPA-650/2-75-019-a, U.S. Environmental Protection Agency, Research Triangle Park, North Carolina, February 1975. 302 pp.

30. Hydrocarbon Pollutant Systems Study, Volume 1. Stationary Sources, Effects, and Control. Publication No. APTD-1499, U.S. Environmental Protection Agency, Research Triangle Park, North Carolina, October 1972. 377 pp.

31. Chemical Engineers' Handbook, Fifth Edition. J. H. Perry and C. H. Chilton, eds. McGraw-Hill Book Company, New York, New York, 1973.

32. Air Pollution Engineering Manual, Second Edition. J. A. Danielson, ed. Publication No. AP-40, U.S. Environmental Protection Agency, Research Triangle Park, North Carolina, May 1973. 987 pp.

33. Solvent Recovery System Proves a Speedy Payout. Rubber World, 165(5):44, 1972.

34. Treybal, R. E. Mass Transfer Operations. McGraw-Hill Book Company, New York, New York, 1968. 666 pp.

35. Rolke, R. W., R. D. Hawthorne, C. R. Garbett, E. R. Slater, and T. T. Phillips. Afterburner Systems Study. EPA-R2-72-062, U.S. Environmental Protection Agency, Research Triangle Park, North Carolina, August 1972. 336 pp.

36. Sandomirsky, A. G., D. M. Benforado, L. D. Grames, and C. E. Pauletta. Fume Control in Rubber Processing by Direct-Flame Incineration. Journal of the Air Pollution Control Association, 16(12):673-676, 1966.

37. Control Techniques for Hydrocarbons and Organic Solvent Emissions from Stationary Sources. Publication No. AP-68, U.S. Department of Health, Education, and Welfare, Washington, D.C., March 1970. 113 pp.

38. Control Techniques for Particulate Air Pollutants. Publication No. AP-51, U.S. Department of Health, Education, and Welfare, Washington, D.C., January 1969. 241 pp.

39. Frey, R. E. Types of Fabric Filter Installations. Journal of the Air Pollution Control Association, 24(12):1148-1149, 1974.

40. Bakke, E. Optimizing Filter Parameters. Journal of the Air Pollution Control Association, 24(12):1150-1154, 1974.

41. Farkas, M. D. Mist Abatement from Plastics Processing Operations. In: Plastics and Ecology - Influence on Pollution, Flammability, and Safety, Proceedings of the V Regional Technical Conference, The Society of Plastics Engineers, Inc., Cherry Hill, New Jersey, October 1970. pp. 9-13.

42. The Statistics for 1970. Modern Plastics, 48(1):65-77, 1971.

43. Materials and Market Statistics for 1971. Modern Plastics, 49(1):41-50, 1972.

44. Everything's Coming Up Roses, Thorns and All. Modern Plastics, 50(1):52-63, 1973.

45. Materials and Market Statistics for '73. Modern Plastics, 51(1):38-47, 1974.

46. Goodbye, Resin Shortage? Don't You Believe It! Modern Plastics, 52(1):44-56, 1975.

47. The Slow Road Back. Modern Plastics, 53(1):38-51, 1976.

48. The Outlook: 1970-1980. Modern Plastics, 47(1):97-102, 1970.

49. Supply Status Report No. 10: Nylons. Modern Plastics, 52(2):52, 1975.

50. Supply Status Report No. 6: Phenolics. Modern Plastics, 51(10:64, 1974.

51. From Now On, Plastics Supply Will Be Just About In Balance With Demand. Modern Plastics, 52(10:40-43, 1975.

52. Supply Status Report No. 3: HDPE. Modern Plastics, 51(7): 52, 1974.

53. Supply Status Report No. 4: LDPE. Modern Plastics, 51(8): 42, 1974.

54. Supply Status Report No. 5: Polypropylene. Modern Plastics, 51(9):78, 1974.

55. Supply Status Report No. 2: Styrenics. Modern Plastics, 51(6):66, 1974.

56. Supply Status Report No. 7: Urea and Melamine. Modern Plastics, 51(11):59, 1974.

57. Turner, D. B. Workbook of Atmospheric Dispersion Estimates. Public Health Service Publication No. 999-AP-26, U.S. Department of Health, Education, and Welfare, Cincinnati, Ohio, May 1970. 84 pp.

58. Martin, D. O., and J. A. Tikvart. A General Atmospheric Diffusion Model for Estimating the Effects on Air Quality of One or More Sources. Presented at the 61st Annual Meeting of the Air Pollution Control Association, St. Paul, Minnesota, June 23-27, 1968. 18 pp.

59. Tadmor, J., and Y. Gur. Analytical Expressions for the Vertical and Lateral Dispersion Coefficients in Atmospheric Diffusion. Atmospheric Environment, 3(6):688-689, 1969.

60. Gifford, F. A., Jr. An Outline of Theories of Diffusion in the Lower Layers of the Atmosphere. In: Meteorology and Atomic Energy 1968, Chapter 3, D. A. Slade, ed. Publication No. TlD-24190, U.S. Atomic Energy Commission Technical Information Center, Oak Ridge, Tennessee, July 1968. p. 113.

61. Code of Federal Regulations, Title 42 - Public Health, Chapter IV - Environmental Protection Agency, Part 410 - National Primary and Secondary Ambient Air Quality Standards, April 28, 1971. 16 pp.

APPENDIX A

CONSUMPTION AND PROCESSING DATA FOR PLASTIC RESINS

TABLE A-1. 1976 CONSUMPTION AND PROCESSING OF ACRYLIC RESINS (13)

Product type	Processing method	Consumption, 10^3 metric tons	Percent of consumption
Cast sheet	Film and sheet.	57	25.7
Coatings	Coating.	47	21.2
Molding and extrusion powder	50% Molding,	63	28.4
	50% extrusion.	63	28.4
Other	None.	55	24.8
TOTAL		222	100.1[a]

[a]Does not equal 100.0% due to erros in rounding.

TABLE A-2. 1976 CONSUMPTION AND PROCESSING OF CELLULOSIC RESINS (13)

Product type	Processing method	Consumption, 10^3 metric tons	Percent of consumption
Automotive	Molding.	7.0	10.0
Electrical appliances, radio, TV	Molding.	1.5	2.1
Industrial sheeting	Film and sheet.	8.0	11.4
Optical goods	Film and sheet.	8.0	11.4
Packaging	Film and sheet.	20.0	28.6
Personal items	Molding.	16.0	22.9
Toys	Molding.	2.5	3.6
Tubing	Extrusion.	4.0	5.7
Other	None.	3.0	4.3
TOTAL		70.0	100.0

TABLE A-3. 1976 CONSUMPTION AND PROCESSING OF EPOXY RESINS (13)

Product type	Processing method	Consumption, 10^3 metric tons	Percent of consumption
Bonding and adhesives	Adhesives.	8.0	8.0
Flooring, paving, aggregates	Film and sheet.	4.8	4.8
Protective coatings:			
Appliances finishes	Coating.	3.0	3.0
Auto primers	Coating.	7.0	7.0
Can and drum coatings	Coating.	13.5	13.5
Pipe coatings	Coating.	2.5	2.5
Plant maintenance	Coating.	10.5	10.5
Other	Coating.	15.5	15.5
Reinforced applications:			
Electrical laminates	Lamination.	7.0	7.0
Filament winding	Extrusion.	6.5	6.5
Other	Extrusion.	2.5	2.5
Tooling, casting, molding	Molding.	7.2	7.2
Other	None.	12.0	12.0
TOTAL		100.0	100.0

TABLE A-4. 1976 CONSUMPTION AND PROCESSING OF NYLON RESINS (13)

Product type	Processing method	Consumption, 10^3 metric tons	Percent of consumption
Appliances	Molding.	5.5	6.3
Consumer products	Molding.	11.0	12.6
Electrical/electronics	Molding.	11.5	13.1
Filaments and bristle	Extrusion.	8.5	9.7
Film	Film and sheet.	7.0	8.0
Machinery parts	Molding.	10.0	11.4
Sheet, rod, tube	Film and sheet.	5.0	5.7
Transportation	Molding.	20.0	22.9
Wire and cable	Extrusion.	6.0	6.9
Other	None.	3.0	3.4
TOTAL		87.5	100.0

TABLE A-5. 1976 CONSUMPTION AND PROCESSING OF PHENOLIC RESINS (13)

Product type	Processing method	Consumption, 10^3 metric tons	Percent of consumption
Bonding and adhesive resin for:			
Coated and bonded abrasives	Adhesives.	13	2.2
Fibrous and granulated wood	Adhesives.	32	5.4
Friction materials	Adhesives.	13	2.2
Foundry and shell moldings	Adhesives.	30	5.1
Insulation materials	Adhesives.	96	16.3
Laminates:			
Building	Lamination.	18	3.1
Electrical/electronics	Lamination.	7	1.2
Furniture	Lamination.	12	2.0
Other	Lamination.	5	0.8
Molding compound	Molding.	165	28.0
Plywood	Adhesives.	132	22.4
Protective coatings	Coating.	11	1.9
Other	None.	56	9.5
TOTAL		590	100.1[a]

[a]Does not equal 100.0% due to errors in rounding.

TABLE A-6. 1976 CONSUMPTION AND PROCESSING OF POLYACETAL RESINS (13)

Product type	Processing method	Consumption, 10^3 metric tons	Percent of consumption
Appliances	Molding.	3.3	8.5
Consumer products	Molding.	4.3	11.0
Electrical/electronics	Molding.	3.0	7.7
Machinery parts	Molding.	10.5	26.9
Plumbing and hardware	Extrusion.	5.7	14.6
Sheet, rod, tube	Film and sheet	2.9	7.4
Transportation	Molding.	7.0	17.9
Other	None.	2.3	5.9
TOTAL		39.0	99.9[a]

[a]Does not equal 100.0% due to errors in rounding.

TABLE A-7. 1976 CONSUMPTION AND PROCESSING OF POLYCARBONATE RESINS (13)

Product type	Processing method	Consumption, 10^3 metric tons	Percent of consumption
Appliances	Molding.	6.9	13.5
Electrical/electronics	Molding.	10.2	20.0
Glazing	Molding.	15.8	31.0
Lighting	Molding.	2.0	3.9
Signs	Film and sheet.	2.3	4.5
Sports and recreation	Molding.	2.9	5.7
Transportation	Molding.	3.9	7.6
Other	None.	7.0	13.7
TOTAL		51.0	99.9[a]

[a]Does not equal 100.0% due to errors in rounding.

TABLE A-8. 1976 CONSUMPTION AND PROCESSING OF POLYESTER RESINS (13)

Product type	Processing method	Consumption, 10^3 metric tons	Percent of consumption
Reinforced products:			
Aerospace and aircraft	Molding.	9	1.3
Appliances	Molding.	30	4.3
Construction	93% Extrusion, 7% film and sheet.	107	15.5
Consumer products	Molding.	35	5.1
Corrosion-resistant products	Extrusion.	80	11.6
Electrical	Molding.	44	6.4
Marine	Molding.	150	21.7
Transportation	Molding.	120	17.4
Other	None.	25	3.6
Nonreinforced products	None.	86	12.4
Surface coatings	Coating.	5	0.7
TOTAL		691	100.0

TABLE A-9. 1976 CONSUMPTION AND PROCESSING OF HIGH-DENSITY POLYETHYLENE RESINS (13)

Product type	Processing method	Consumption, 10^3 metric tons	Percent of consumption
Blow-molded products	Molding.	473	37.8
Film	Film and sheet.	43	3.4
Injection-molded products	Molding.	291	23.3
Pipe, fitting, conduit	Extrusion.	113	9.0
Other extruded products	Extrusion.	31	2.5
Sheet	Film and sheet.	25	2.0
Wire and cable	Extrusion.	35	2.8
Other	None.	240	19.2
TOTAL		1,251	100.0

TABLE A-10. 1976 CONSUMPTION AND PROCESSING OF LOW-DENSITY POLYETHYLENE RESINS (13)

Product type	Processing method	Consumption, 10^3 metric tons	Percent of consumption
Blow-molded products	Molding.	23	1.0
Extrusion coating	Extrusion.	214	9.0
Film	Film and sheet.	1,472	61.6
Injection-molded products	Molding.	259	10.8
Pipe and conduit	Extrusion.	15	0.6
Other extruded products	Extrusion.	24	1.0
Wire and cable	Extrusion.	155	6.5
Other	None.	227	9.5
TOTAL		2,389	100.0

TABLE A-11. 1976 CONSUMPTION AND PROCESSING OF POLYPROPYLENE RESINS (13)

Product type	Processing method	Consumption, 10^3 metric tons	Percent of consumption
Blow-molded products	Molding.	16	1.6
Extruded products	Extrusion.	36	3.6
Fiber and filaments	Extrusion.	320	31.7
Film	Film and sheet.	82	8.1
Injection-molded products	Molding.	425	42.2
Pipe and conduit	Extrusion.	7	0.7
Wire and Cable	Extrusion.	31	3.1
Other	None.	91	9.0
TOTAL		1,008	100.0

TABLE A-12. 1976 CONSUMPTION AND PROCESSING OF POLYSTYRENE AND STYRENE COPOLYMER RESINS (13)

Product type	Processing method	Consumption, 10^3 metric tons	Percent of consumption
Emulsion paint	Coating.	9	0.4
Extruded products	Extrusion.	450	21.3
Foam	Foam.	275	13.0
Molded products	Molding.	977	46.3
Textile and paper coating	Coating.	221	10.5
Other	None.	180	8.5
TOTAL		2,112	100.0

TABLE A-13. 1976 CONSUMPTION AND PROCESSING OF POLYURETHANE RESINS (13)

Product type	Processing method	Consumption, 10^3 metric tons	Percent of consumption
Flexible foam:			
Bedding	Foam.	66	8.8
Furniture	Foam.	215	28.5
Packaging	Foam.	10	1.3
Rug underlay	Foam.	46	6.1
Textile laminates	Foam.	10	1.3
Transportation	Foam.	195	25.9
Other	Foam.	10	1.3
Rigid foam:			
Appliances	Foam.	35	4.6
Building insulation	Foam.	75	10.0
Furniture	Foam.	10	1.3
Industrial tanks	Foam.	22	2.9
Marine flotation	Foam.	6	0.8
Packaging	Foam.	11	1.5
Transportation	Foam.	20	2.7
Other	Foam.	7	0.9
Thermoplastic polyurethane:			
Fabric coating	Coating.	5.0	0.7
Film and sheet	Film and sheet.	1.2	0.2
Injection-molded products	Molding.	6.3	0.8
Laminating adhesives	Adhesives.	0.9	0.1
Leather finishes	Extrusion.	0.4	0.1
Wire coating	Extrusion.	0.8	0.1
Other	None.	0.8	0.1
TOTAL		753.4	100.0

TABLE A-14. 1976 CONSUMPTION AND PROCESSING OF POLYVINYL CHLORIDE AND COPOLYMER RESINS (13)

Product type	Processing method	Consumption, 10^3 metric tons	Percent of consumption
Apparel:			
Baby pants	Film and sheet.	9	0.4
Footwear	Film and sheet.	58	2.9
Outerwear	Film and sheet.	24	1.2
Building and construction:			
Extruded foam moldings	Foam.	21	1.0
Flooring	Film and sheet.	155	7.6
Lighting	Film and sheet.	6	0.3
Panels and siding	Film and sheet.	42	2.1
Pipe and conduit	Extrusion.	616	30.4
Pipe fittings	Molding.	42	2.1
Rainwater system, soffits, fascias	Film and sheet.	14	0.7
Swimming pool liners	Film and sheet.	16	0.8
Weatherstripping	Extrusion.	13	0.6
Windows, other profiles	Film and sheet.	21	1.0
Electrical:			
Wire and cable	Extrusion.	160	7.9
Home furnishings:			
Appliances	Molding.	20	1.0
Furniture	Molding.	95	4.7
Wall coverings and wood surfacing films	Coating.	47	2.3
Housewares:	Molding.	45	2.2
Packaging:			
Blow-molded bottles	Molding.	36	1.8
Closure-liners and gaskets	Molding.	11	0.5
Coatings	Coating.	9	0.4
Film	Film and sheet.	80	3.9
Sheet	Film and sheet.	35	1.7
Recreation:			
Records q	Molding.	60	3.0
Sporting goods	Molding.	24	1.2
Toys	Molding.	34	1.7
Transportation:			
Auto mats	Molding.	20	1.0
Auto tops	Molding.	14	0.7
Upholstery and seat covers	Molding.	86	4.2
Miscellaneous:			
Agriculture (incl. pipe)	Extrusion.	59	2.9
Credit cards	Film and sheet.	7	0.3
Garden hose	Extrusion.	10	0.5
Laminates	Lamination.	16	0.8
Medical tubing	Extrusion.	19	0.9
Novelties	Molding.	5	0.2
Stationery supplies	Molding.	16	0.8
Tools and hardware	Molding.	6	0.3
Other	None.	78	3.8
TOTAL		2,029	99.8[a]

[a]Does not equal 100.0% due to errors in rounding.

TABLE A-15. 1976 CONSUMPTION AND PROCESSING OF UREA AND MELAMINE RESINS (13)

Product type	Processing method	Consumption, 10^3 metric tons	Percent of consumption
Bonding and adhesive resins for:			
Fibrous and granulated wood	Adhesives.	274	62.4
Laminating	Adhesives.	14	3.2
Plywood	Adhesives.	33	7.5
Molding compounds	Molding.	43	9.8
Paper treating and coating resins	Coating.	24	5.5
Protective coatings	Coating.	35	8.0
Textile treating and coating resins	Coating.	14	3.2
Other	None.	2	0.5
TOTAL		439	100.1[a]

[a]Does not equal 100.0% due to errors in rounding.

APPENDIX B

DERIVATION OF SOURCE SEVERITY EQUATIONS[a]

SUMMARY OF MAXIMUM SEVERITY EQUATIONS

The maximum severity of pollutants may be calculated using the mass emission rate, Q, the height of the emissions, H, and the ambient air quality standard, AAQS. The equations summarized in Table B-1 are developed in detail in this appendix.

TABLE B-1. POLLUTANT SEVERITY EQUATIONS FOR ELEVATED SOURCES

Pollutant	Severity equation
Particulate	$S = \frac{70\ Q}{H^2}$
SO_x	$S = \frac{50\ Q}{H^2}$
NO_x	$S = \frac{315\ Q}{H^{2.1}}$
Hydrocarbons	$S = \frac{162\ Q}{H^2}$
CO	$S = \frac{0.78\ Q}{H^2}$

DERIVATION OF χ_{max} FOR USE WITH U.S. AVERAGE CONDITIONS

The most widely accepted formula for predicting downwind ground level concentrations from a point source is (57)

---

[a]This Appendix was prepared by T. R. Blackwood and E. C. Eimutis of Monsanto Research Corporation, Dayton, Ohio.

---

(57) Turner, D. B. Workbook of Atmospheric Dispersion Estimates. Public Health Service Publication No. 999-AP-26, U.S. Department of Health, Education, and Welfare, Cincinnati, Ohio, May 1970. 84 pp.

$$\chi = \frac{Q}{\pi \sigma_y \sigma_z u}\left[\exp - \frac{1}{2}\left(\frac{y}{\sigma_y}\right)^2\right]\exp\left[- \frac{1}{2}\left(\frac{H}{\sigma_z}\right)^2\right] \qquad \text{(B-1)}$$

where χ = downwind ground level concentration at reference coordinate x and y with emission height of H, grams per cubic meter

Q = mass emission rate, grams per second

σ_y = standard deviation of horizontal dispersion, meters

σ_z = standard deviation of vertical dispersion, meters

u = wind speed, meters per second

y = horizontal distance from centerline of dispersion, meters

H = height of emission release, meters

x = downwind emission dispersion distance from source of emission release, meters

π = 3.1416

We assume that χ_{max} occurs when x is much greater than 0 and when y equals 0. For a given stability class, standard deviations of horizontal and vertical dispersion have often been expressed as a function of downwind distance by power law relationships as follows (58):

$$\sigma_y = ax^b \qquad \text{(B-2)}$$

$$\sigma_z = cx^d + f \qquad \text{(B-3)}$$

Values for a, b, c, d, and f are given in Tables B-2 (59) and B-3. Substituting these general equations into Equation B-1 yields

$$\chi = \frac{Q}{ac\pi ux^{b+d} + a\pi ufx^b} \exp -\left[\frac{H^2}{2(cx^d + f)^2}\right] \qquad \text{(B-4)}$$

Assuming that χ_{max} occurs when x is less than 100 m or when the stability class is C, then f equals 0 and Equation B-4 becomes

---

(58) Martin, D. O., and J. A. Tikvart. A General Atmospheric Diffusion Model for Estimating the Effects on Air Quality of One or More Sources. 61st Annual Meeting of the Air Pollution Control Association, St. Paul, Minnesota, June 23-27, 1968. 18 pp.

(59) Tadmor, J., and Y. Gur. Analytical Expressions for the Vertical and Lateral Dispersion Coefficients in Atmospheric Diffusion. Atmospheric Environment, 3(6):688-689, 1969.

TABLE B-2. VALUES OF a FOR THE COMPUTATION OF σ_y[a] (59)

Stability class	a
A	0.3658
B	0.2751
C	0.2089
D	0.1471
E	0.1046
F	0.0722

[a]For Equation B-2: $\sigma_y = ax^b$

where x = downwind distance
b = 0.9031

TABLE B-3. VALUES OF THE CONSTANTS USED TO ESTIMATE VERTICAL DISPERSION[a] (57)

Usable range, m	Stability class	Coefficient		
		c_1	d_1	f_1
>1,000	A	0.00024	2.094	9.6
	B	0.055	1.098	2.0
	C	0.113	0.911	0.0
	D	1.26	0.516	-13
	E	6.73	0.305	-34
	F	18.05	0.18	-48.6
		c_2	d_2	f_2
100 to 1,000	A	0.0015	1.941	9.27
	B	0.028	1.149	3.3
	C	0.113	0.911	0.0
	D	0.222	0.725	-1.7
	E	0.211	0.678	-1.3
	F	0.086	0.74	-0.35
		c_3	d_3	f_3
<100	A	0.192	0.936	0
	B	0.156	0.922	0
	C	0.116	0.905	0
	D	0.079	0.881	0
	E	0.063	0.871	0
	F	0.053	0.814	0

[a]For Equation B-3: $\sigma_z = cx^d + f$

$$\chi = \frac{Q}{ac\pi u x^{b+d}} \exp\left(\frac{-H^2}{2\ c^2 x^{2d}}\right) \tag{B-5}$$

For convenience, let

$$A_R = \frac{Q}{ac\pi u} \text{ and } B_R = \frac{-H^2}{2\ c^2}$$

so that Equation B-5 reduces to

$$\chi = A_R x^{-(b+d)} \exp\left(\frac{B_R}{x^{2d}}\right) \tag{B-6}$$

Taking the first derivative of Equation B-6,

$$\frac{d\chi}{dx} = A_R \left\{ x^{-b-d}\left[\exp\left(B_R x^{-2d}\right)\right]\left(-\ 2\ dB_R x^{-2d-1}\right) + \exp\left(B_R x^{-2d}\right)(-\ b\ -\ d)x^{-b-d-1}\right\} \tag{B-7}$$

and setting this equal to zero (to determine the roots which give the minimum and maximum conditions of χ with respect to x) yields

$$\frac{d\chi}{dx} = 0 = A_R x^{-b-d-1}\left[\exp\left(B_R x^{-2d}\right)\right]\left(-\ 2\ dB_R x^{-2d}\ -\ b\ -\ d\right) \tag{B-8}$$

Since we define that x is not equal to 0 or infinity at χ_{max}, the following expression must be equal to 0:

$$-\ 2\ dB_R x^{-2d}\ -\ d\ -\ b\ =\ 0 \tag{B-9}$$

or

$$(b\ +\ d)x^{2d}\ =\ -\ 2\ dB_R \tag{B-10}$$

or

$$x^{2d} = \frac{-\ 2\ dB_R}{b\ +\ d} = \frac{2\ dH^2}{2\ c^2(b\ +\ d)} = \frac{dH^2}{c^2(b\ +\ d)} \tag{B-11}$$

or

$$x^{2d} = \frac{dH^2}{c^2(b\ +\ d)} \tag{B-12}$$

Hence

$$x = \left[\frac{dH^2}{c^2(b + d)}\right]^{1/2d} \text{ at } \chi_{max} \tag{B-13}$$

Thus Equations B-2 and B-3 (at f equals 0) become

$$\sigma_y = a\left[\frac{dH^2}{c^2(d + b)}\right]^{b/2d} \tag{B-14}$$

$$\sigma_z = c\left[\frac{dH^2}{c^2(b + d)}\right]^{d/2d} = \left(\frac{dH^2}{b + d}\right)^{1/2} \tag{B-15}$$

The maximum will be determined for U.S. average conditions of stability. According to Gifford (60), this is when σ_y equals σ_z. Since b equals 0.9031, and upon inspection of Table B-2 under U.S. average conditions, σ_y equals σ_z, it can be seen that 0.881 is less than or equal to d, which is less than or equal to 0.905 (Class C stability[a]). Thus, it can be assumed that b is nearly equal to d in Equations B-14 and B-15 or

$$\sigma_z = \frac{H}{\sqrt{2}} \tag{B-16}$$

and

$$\sigma_y = \frac{a}{c}\left(\frac{H}{\sqrt{2}}\right) \tag{B-17}$$

Under U.S. average conditions, σ_y equals σ_z and a is approximately equal to c if b is approximately equal to d and if f equals 0 (between Classes C and D, but closer to belonging in Class C).

Then

$$\sigma_y = \frac{H}{\sqrt{2}} \tag{B-18}$$

---

[a]The values given in Table B-3 are mean values for stability class. Class C stability describes these coefficients and exponents, only within about a factor of two.

---

(60) Gifford, F. A., Jr. An Outline of Theories of Diffusion in the Lower Layers of the Atmosphere. In: Meteorology and Atomic Energy 1968, Chapter 3. Slade, D. A., ed. TID-24190, U.S. Atomic Energy Commission Technical Information Center, Oak Ridge, Tennessee, July 1968. p. 113.

Substituting for σ_y from Equation B-18 and for σ_z from Equation B-16 into Equation B-1 and letting y equal 0,

$$\chi_{max} = \frac{2\ Q}{\pi u H^2} \exp\left[-\frac{1}{2}\left(\frac{H\sqrt{2}}{H}\right)^2\right] \tag{B-19}$$

or

$$\chi_{max} = \frac{2\ Q}{\pi e u H^2} \tag{B-20}$$

DEVELOPMENT OF SOURCE SEVERITY EQUATIONS

Source severity, S, has been defined as follows:

$$S = \frac{\bar{\chi}_{max}}{AAQS} \text{ and } S = \frac{\bar{\chi}_{max}}{F} \tag{B-21}$$

where $\bar{\chi}_{max}$ = time-averaged maximum ground level concentration
F = AAQS

Values of $\bar{\chi}_{max}$ are found from the following equation:

$$\bar{\chi}_{max} = \chi_{max}\left(\frac{t_o}{t}\right)^{0.17} \tag{B-22}$$

where t_o is the "instantaneous" (i.e., 3 min) averaging time and t is the averaging time used for the ambient air quality standard as shown in Table B-4.

CO Severity

The primary standard for CO is reported for a 1-hr averaging time. Therefore,

$$t = 60 \text{ min}$$

$$t_o = 3 \text{ min}$$

$$\bar{\chi}_{max} = \chi_{max}\left(\frac{3}{60}\right)^{0.17} \tag{B-23}$$

$$= \frac{2\ Q}{\pi e u H^2}\left(\frac{3}{60}\right)^{0.17} \tag{B-24}$$

$$= \frac{2\ Q}{(3.14)(2.72)(4.5)H^2}(0.6) \tag{B-25}$$

TABLE B-4. SUMMARY OF NATIONAL AMBIENT AIR QUALITY STANDARDS (61)

Pollutant	Averaging time, hr	Primary standards	Secondary standards
		μg/m³ (ppm)	
Particulate	Annual (geometric mean)	75	60[a]
	24[b]	260	150
SO_x	Annual (arithmetic mean)	80 (0.03)	60 (0.02)
	24[b]	24	365 (0.14)
	3[b]	365 (0.14)	260[c] (0.1)
	8[b]	None.	1,300 (0.5)
CO	1[b]	10,000 (9)	None.
		40,000 (35)	40,000 (35)
Nitrogen dioxide	Annual (arithmetic mean)	100 (0.05)	100 (0.05)
Photochemical oxidants	1[b]	160 (0.08)	160 (0.08)
Hydrocarbons (nonmethane)[d]	3 (6 a.m. to 9 a.m.)	160 (0.24)	160 (0.24)

[a]The secondary annual standard (60 μg/m³) is a guide for assessing implementation plants to achieve the 24-hr secondary standard.

[b]Not to be exceeded more than once per year.

[c]The secondary annual standard (260 μg/m³ is a guide for assessing implementation plans to achieve the annual standard.

[d]Recommended guideline for meeting the primary ambient air quality standard for photochemical oxidants.

$$\overline{\chi}_{max} = \frac{0.052\ Q}{H^2}(0.6) \qquad \text{(B-26)}$$

$$\overline{\chi}_{max} = \frac{3.12 \times 10^{-2}\ Q}{H^2} \qquad \text{(B-27)}$$

Substituting the primary standard for CO (0.04 g/m³) into the equation for S then gives

$$S = \frac{\overline{\chi}_{max}}{AAQS} = \frac{3.12 \times 10^{-2}\ Q}{0.04\ H^2} \qquad \text{(B-28)}$$

(61) Code of Federal Regulations, Title 42 - Public Health, Chapter IV - Environmental Protection Agency, Part 410 - National Primary and Secondary Ambient Air Quality Standards, April 28, 1971. 16 pp.

or

$$S = \frac{0.78\ Q}{H^2} \tag{B-29}$$

Hydrocarbon Severity

The primary standard for hydrocarbon is reported for a 3-hr averaging time.

$$t = 180 \text{ min}$$

$$\bar{\chi}_{max} = \chi_{max} \left(\frac{3}{180}\right)^{0.17} \tag{B-30}$$

$$= 0.5\ \chi_{max} \tag{B-31}$$

$$= \frac{(0.5)(0.052)Q}{H^2} \tag{B-32}$$

$$\bar{\chi}_{max} = \frac{0.026\ Q}{H^2} \tag{B-33}$$

For hydrocarbons, AAQS equals 1.6×10^{-4} g/m^3. Therefore

$$S = \frac{\bar{\chi}_{max}}{AAQS} = \frac{0.026\ Q}{1.6 \times 10^{-4}\ H^2} \tag{B-34}$$

or

$$S = \frac{162.5\ Q}{H^2} \tag{B-35}$$

Particulate Severity

The primary standard for particulate is reported for a 24-hr averaging time.

$$\bar{\chi}_{max} = \chi_{max} \left(\frac{3}{1,440}\right)^{0.17} \tag{B-36}$$

$$= \frac{0.052\ Q}{H^2}(0.35) \tag{B-37}$$

$$\bar{\chi}_{max} = \frac{0.0182\ Q}{H^2} \tag{B-38}$$

For particulates, AAQS equals 2.6×10^{-4} g/m^3. Therefore,

$$S = \frac{\bar{\chi}_{max}}{AAQS} = \frac{0.0182\ Q}{2.6 \times 10^{-4}\ H^2} \tag{B-39}$$

$$S = \frac{70\ Q}{H^2} \tag{B-40}$$

SO_x Severity

The primary standard for SO_x is reported for a 24-hr averaging time. Using t equals 1,440 min. and proceeding as before,

$$\bar{\chi}_{max} = \frac{0.0182\ Q}{H^2} \tag{B-41}$$

For SO_x, AAQS equals 3.65×10^{-4} g/m^3. Therefore,

$$S = \frac{\bar{\chi}_{max}}{AAQS} = \frac{0.0182\ Q}{3.65 \times 10^{-4}\ H^2} \tag{B-42}$$

or

$$S = \frac{50\ Q}{H^2} \tag{B-43}$$

NO_x Severity

Since NO_x has a primary standard with a 1-yr averaging time, the χ_{max} correction equation cannot be used. Alternatively, the following equation is used:

$$\bar{\chi} = \frac{2.03\ Q}{\sigma_z ux} \exp\left[-\frac{1}{2}\left(\frac{H}{\sigma_z}\right)^2\right] \tag{B-44}$$

A difficulty arises, however, because a distance, x, from emission point to receptor is included; hence, the following rationale is used:

Equation B-20 is valid for neutral conditions or when σ_z is approximately equal to σ_y. This maximum occurs when

$$H \simeq \sqrt{2}\sigma_z$$

and since, under these conditions,

$$\sigma_z = ax^b$$

then the distance x_{max} where the maximum concentration occurs is

$$x_{max} = \left(\frac{H}{\sqrt{2}a}\right)^{1/b} \tag{B-45}$$

For Class C conditions, a equals 0.113 and b equals 0.911. Substituting these values into Equation B-45 yields

$$x_{max} = \left(\frac{H}{0.16}\right)^{1.098} = 7.5\ H^{1.098} \tag{B-46}$$

Since

$$\sigma_z = 0.113\ x_{max}^{0.911}$$

and

$$u = 4.5\ m/s$$

and letting x equal x_{max}, Equation B-44 becomes

$$\bar{\chi}_{max} = \frac{4\ Q}{x_{max}^{1.911}}\ \exp\left[-\ \frac{1}{2}\left(\frac{H}{\sigma_z}\right)^2\right] \tag{B-47}$$

In Equation B-47, the factor

$$\frac{4\ Q}{x_{max}^{1.911}} = \frac{4\ Q}{(7.5\ H^{1.098})^{1.911}} \tag{B-48}$$

Therefore,

$$\bar{\chi}_{max} = \frac{0.085\ Q}{H^{2.1}}\ \exp\left[-\ \frac{1}{2}\left(\frac{H}{\sigma_z}\right)^2\right] \tag{B-49}$$

As noted above,

$$\sigma_z = 0.113\ x^{0.911} \tag{B-50}$$

Substitution for x yields

$$\sigma_z = 0.113\ (7.5\ H^{1.1})^{0.911} \tag{B-51}$$

$$\sigma_z = 0.71\ H \tag{B-52}$$

Therefore,

$$\bar{\chi}_{max} = \frac{0.085\ Q}{H^{2.1}}\ \exp\left[-\ \frac{1}{2}\left(\frac{H}{0.71\ H}\right)^2\right] \tag{B-53}$$

$$= \frac{0.085\ Q}{H^{2.1}}(0.371) \tag{B-54}$$

or

$$\bar{\chi}_{max} = \frac{3.15 \times 10^{-2}\ Q}{H^{2.1}} \qquad \text{(B-55)}$$

Since the NO_2 standard is 1.0×10^{-4} g/m^3, the NO_x severity equation is

$$S = \frac{3.15 \times 10^{-2}\ Q}{1 \times 10^{-4}\ H^{2.1}} \qquad \text{(B-56)}$$

or

$$S = \frac{315\ Q}{H^{2.1}} \qquad \text{(B-57)}$$

AFFECTED POPULATION CALCULATION

Another form of the plume dispersion equation is needed to calculate the affected population since the population is assumed to be distributed uniformly around the source. If the wind directions are taken to 16 points and it is assumed that the wind directions within each sector are distributed randomly over a period of a month or a season, it can be assumed that the effluent is uniformly distributed in the horizontal within the sector. The appropriate equation for average concentration, $\bar{\chi}$, in grams per cubic meter is then (57)

$$\bar{\chi} = \frac{2.03\ Q}{\sigma_z ux} \exp\left[\frac{1}{2}\left(\frac{H}{\sigma_z}\right)^2\right] \qquad \text{(B-58)}$$

To find the distances at which $\bar{\chi}$/AAQS equals 1.0, roots are determined for the following equation:

$$\frac{2.03\ Q}{(AAQS)\sigma_z ux} \exp\left[-\frac{1}{2}\left(\frac{H}{\sigma_z}\right)^2\right] = 1.0 \qquad \text{(B-59)}$$

keeping in mind that

$$\sigma_z = ax^b + c$$

where a, b, and c are functions of atmospheric stability and are assumed to be selected for stability Class C.

Since Equation B-59 is a transcendental equation, the roots are found by an iterative technique using the computer.

For a specified emission from a typical source, $\bar{\chi}$/AAQS as a function of distance might look as follows:

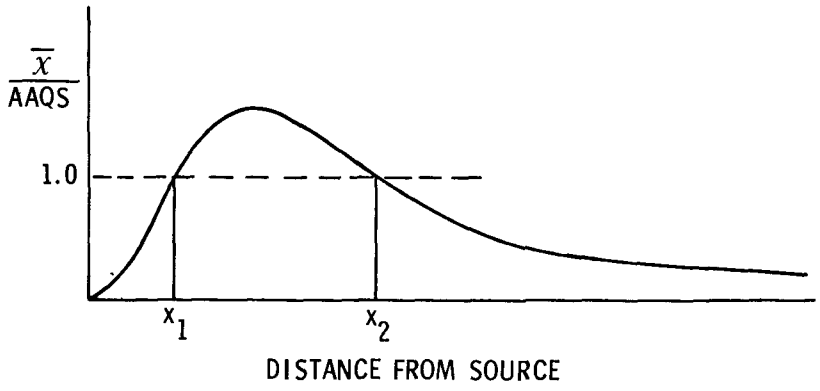

The affected population is contained in the area

$$A = \pi(x_2{}^2 - x_1{}^2) \tag{B-60}$$

If the affected population density is D_P, the total affected population, P', is

$$P' = D_P A \text{ (persons)} \tag{B-61}$$

APPENDIX C

INPUT DATA AND OUTPUT FROM AFFECTED POPULATION CALCULATIONS

Populations affected by emissions from 16 representative plastics processing sources were calculated, using the procedure outlined in Appendix B. Input data and output are shown in Table C-1 for hydrocarbon emissions and particulate emissions from these plastics plants.

TABLE C-1. AFFECTED POPULATION CALCULATIONS

	Hydrocarbon emissions								
	Input data					Output			
Plastic type	Emission rate, g/s	Emission height, m	AAQS, mg/m^3	Wind speed, m/s	Population density, $persons/km^2$	Root X_1, km	Root X_2, km	Affected area km^2	Affected population, persons
Acrylic	3.24	6.1	0.16	4.5	100.	0.022	0.364	0.414	41
Cellulosic	2.68	6.1	0.16	4.5	100.	0.022	0.329	0.338	34
Epoxy	4.83	6.1	0.16	4.5	100.	0.021	0.451	0.637	64
Nylon	2.19	6.1	0.16	4.5	100.	0.023	0.294	0.270	27
Phenolic	3.12	6.1	0.16	4.5	100.	0.022	0.357	0.398	40
Polyacetal	0.972	6.1	0.16	4.5	100.	0.026	0.186	0.107	11
Polycarbonate	3.24	6.1	0.16	4.5	100.	0.022	0.364	0.415	41
Polyester	3.07	6.1	0.16	4.5	100.	0.022	0.353	0.391	39
High-density polyethylene	1.77	6.1	0.16	4.5	100.	0.023	0.262	0.214	21
Low-density polyethylene	2.44	6.1	0.16	4.5	100.	0.022	0.312	0.304	30
Polypropylene	3.38	6.1	0.16	4.5	100.	0.021	0.372	0.434	43
Polystyrene and styrene copolymers	2.38	6.1	0.16	4.5	100.	0.022	0.308	0.297	30
Polyurethane	22.6	6.1	0.16	4.5	100.	0.018	1.02	3.26	326
Polyvinyl chloride and copolymers	3.98	6.1	0.16	4.5	100.	0.021	0.407	0.518	52
Reinforced thermoplastics	2.06	6.1	0.16	4.5	100.	0.023	0.285	0.253	25
Urea and melamine	3.11	6.1	0.16	4.5	100.	0.022	0.356	0.397	40

(continued)

TABLE C-1 (continued)

	Particulate emissions								
	Input data					Output			
Plastic type	Emission rate, g/s	Emission height, m	AAQS, mg/m^3	Wind speed, m/s	Population density, $persons/km^2$	Root X_1, km	Root X_2, km	Affected area km^2	Affected population, persons
Acrylic	0.498	6.1	0.26	4.5	100.	0.037	0.086	0.019	2
Cellulosic	0.498	6.1	0.26	4.5	100.	0.037	0.086	0.019	2
Epoxy	0.498	6.1	0.26	4.5	100.	0.037	0.086	0.019	2
Nylon	0.498	6.1	0.26	4.5	100.	0.037	0.086	0.019	2
Phenolic	2.95	6.1	0.26	4.5	100.	0.023	0.186	0.219	22
Polyacetal	0.498	6.1	0.26	4.5	100.	0.037	0.086	0.019	2
Polycarbonate	0.498	6.1	0.26	4.5	100.	0.037	0.086	0.019	2
Polyester	5.80	6.1	0.26	4.5	100.	0.021	0.383	0.460	46
High-density polyethylene	0.498	6.1	0.26	4.5	100.	0.037	0.086	0.019	2
Low-density polyethylene	0.498	6.1	0.26	4.5	100.	0.037	0.086	0.019	2
Polypropylene	0.498	6.1	0.26	4.5	100.	0.037	0.086	0.019	2
Polystyrene and styrene copolymers	0.498	6.1	0.26	4.5	100.	0.037	0.086	0.019	2
Polyurethane	0.498	6.1	0.26	4.5	100.	0.037	0.086	0.019	2
Polyvinyl chloride and copolymers	3.09	6.1	0.26	4.5	100.	0.023	0.272	0.231	23
Reinforced thermoplastics	0.498	6.1	0.26	4.5	100.	0.037	0.086	0.019	2
Urea and melamine	1.28	6.1	0.26	4.5	100.	0.027	0.164	0.083	8

APPENDIX D

SAMPLE CALCULATIONS

This section outlines procedures for calculating 1) the source severity of any of the 16 representative plastics processing plants and 2) the national and state masses of emissions from plastics processing.

CALCULATION OF SOURCE SEVERITY

An "overall" emission factor, $\overline{EF}$ for each plastic type is determined by summing the products of the fraction, F_i, of plastic processed per process operation or handling method and the emission factor, EF_i, for each such operation; i.e.,

$$\overline{EF} \equiv \sum_i (F_i)(EF_i) \qquad \text{(D-1)}$$

For example, inserting the values from Table 1 and Table 6 for hydrocarbon emissions from propylene (designated by subscript "PP"),

$$(\overline{EF})_{PP} = (0.430)(48\ g/kg) + (0.089)(21\ g/kg) + (0.481)(20\ g/kg) \qquad \text{(D-2)}$$

$$(\overline{EF})_{PP} = 32\ g/kg \qquad \text{(D-3)}$$

The mass emission rate, Q, is calculated by multiplying $\overline{EF}$, as defined in Equation D-1, by the representative production rate from Section 4, 3,330 metric tons/yr, or 0.106 kg/s.

Therefore,

$$Q = (0.106\ kg/s)(\overline{EF},\ g/kg \qquad \text{(D-4)}$$

For the polypropylene example,

$$(Q)_{PP} = (0.106\ kg/s)(32\ g/kg) \qquad \text{(D-5)}$$

$$(Q)_{PP} = 3.4\ g/s \qquad \text{(D-6)}$$

The equation for hydrocarbon severity, derived in Appendix B, is as follows:

$$S = \frac{162.5\ Q}{H^2} \qquad \text{(B-35)}$$

Substituting the hydrocarbon emission rate calculated above for polypropylene and the assumed emission height of 6.1 m, the source severity for hydrocarbons from polypropylene plastics processing is

$$S_{PP} = \frac{(162.5)(3.4)}{(6.1)^2} \qquad \text{(D-7)}$$

$$S_{PP} = 15 \qquad \text{(D-8)}$$

CALCULATION OF NATIONAL AND STATE MASSES OF EMISSIONS

The national masses of emissions from each of 16 different types of plastics processing, as given in Tables 9 and 10, were calculated as follows: For each plastic type, the "overall" emission factor defined by Equation D-1 was multiplied by the actual 1976 production of that plastic as listed in Table 1. Therefore, the total mass of hydrocarbon emissions from polypropylene processing was (32 g/kg)(1.01 x 10^6 metric tons)(0.001 kg/g), or 32,200 metric tons.

The total national masses of criteria pollutant emissions from plastics processing--4.62 x 10^5 metric tons of hydrocarbons and 1.57 x 10^6 metric tons of particulates--were obtained by summing the total masses of emissions, described above, from each of the 16 different plastic types.

State masses of emissions from plastics processing were calculated by multiplying the total national mass of a particular emission by the ratio of the state production to the total U.S. production. The necessary production data is given in Table 4. For example, the hydrocarbon emission rate for Ohio is

(4.62 x 10^5 metric tons/yr)(1.37 x 10^6 metric tons/yr)/ (1.19 x 10^5 metric tons/yr), or 5.3 x 10^6 metric tons/yr.

GLOSSARY

acrylic resin: Thermoplastic polymer or copolymer of acrylic acid, methacrylic acid, esters of these acids, or acrylo-acrylonitrile.

adhesive: Any substance capable of holding materials together by surface attachment.

affected population: Number of persons exposed to concentrations of airborne materials which are present in concentrations greater than a predetermined hazard factor.

atmospheric stability class: Designation of the degree of turbulent mixing in the atmosphere.

cellulosic plastic: Any of several types of semisynthetic, thermoplastic polymers based on cellulose.

coating: Thin layer of plastic applied to a base material such as paper or fabric.

criteria pollutants: Any species for which ambient air quality standards have been established; these include nonmethane hydrocarbons, particulates, carbon monoxide, nitrogen dioxide, and sulfur dioxide.

emission factor: Mass of material emitted to the atmosphere per unit of product; e.g., grams of hydrocarbons per kilogram of extruded low-density polyethylene.

epoxy resin: Thermosetting resin produced from epichlorohydrin and aliphatic or aromatic polyols or from polyolefins and peracetic acid.

extrusion: Process in which heated or unheated plastic is forced through a shaping orifice to produce a continuously formed piece.

film: Continuous sheet having a nominal thickness not greater than 0.010 in.

foam: Plastic whose density is decreased markedly by the presence of numerous cavities formed by gaseous displacement.

laminate: Composite produce made by bonding together two or more layers of thermosetting plastic and reinforcing materials such as asbestos, cloth, glass fiber, paper, or wood.

melamine-formaldehyde resin: Thermosetting polymer formed by the condensation of melamine, an organic compound containing three amino ($-NH_2$) groups and formaldehyde.

molding, blow: Method of forming hollow objects from plastics by inflation with compressed gas.

molding, compression: Method of forming solid objects from plastics by placing the material in a confining mold cavity and applying heat and pressure.

molding, injection: Method of forming solid objects in which powdered or granular thermoplastics are fused with heat and pressure and then forced into a cool molding chamber for solidification.

molding, rotational: Method of forming hollow objects in which the interior surfaces of a rotating mold are covered with molten plastics and then chilled to allow product removal.

molding, transfer: Method of forming solid objects from thermosetting plastics by forcing the plastic into a heated mold chamber where curing and solidification occur.

national emission burden: Ratio of the total annual mass of emissions of a criteria pollutant from a given source type to the total annual mass of emissions of that pollutant from all sources nationwide.

nylon: Generic name for a family of thermoplastic polymers characterized by the presence of amide groups (-CONH).

phenolic resin: One of a number of thermosetting resins synthesized by the condensation of phenols with aldehydes.

polyacetal resin: Thermoplastic linear polymer formed by anionic polymerization of formaldehyde.

polycarbonate: Thermoplastic polyester of carbonic acid derived from bisphenol A and phosgene.

polyester resin: Any of several thermosetting condensation products of dihydroxy alcohols and dicarboxylic acids.

polyethylene, high-density: Thermoplastic polymer of ethylene with a specific gravity greater than 0.940.

polyethylene, low-density: Thermoplastic polymer of ethylene with a specific gravity less than 0.940.

polypropylene: Crystalline thermoplastic material produced by catalytic polymerization of propylene.

polystyrene: Synthetic thermoplastic polymer of styrene with a molecular weight which varies depending upon the degree of polymerization.

polyurethane: Thermoplastic or thermosetting polymer produced by the reaction of a polyhydroxy compound and a polyisocyanate.

polyvinyl chloride: Thermoplastic polymer containing the repeating unit $\{H_2CCHCl\}_n$.

reinforced thermoplastic: Composite material comprising a thermoplastic resin and glass fibers.

sheet: Individual piece of plastic in which the thickness is very small relative to length and width.

state emission burden: Ratio of the total annual mass of emissions of a criteria pollutant from a given source type within a given state to the total annual mass of emissions of that pollutant from all sources within that state.

thermoplastic: Capable of being repeatedly softened by heating and hardened by cooling.

thermosetting: Capable of being irreversibly "set" to an infusible or insoluble state by heating and chemical reaction.

urea-formaldehyde resin: Thermosetting polymer produced by a two-step catalytic reaction of urea and formaldehyde.

TECHNICAL REPORT DATA
(Please read Instructions on the reverse before completing)

1. REPORT NO. EPA-600/2-78-004c	2.	3. RECIPIENT'S ACCESSION NO.
4. TITLE AND SUBTITLE SOURCE ASSESSMENT: PLASTICS PROCESSING, State of the Art		5. REPORT DATE March 1978 issuing date
		6. PERFORMING ORGANIZATION CODE
7. AUTHOR(S) T. W. Hughes, R. F. Boland, and G. M. Rinaldi		8. PERFORMING ORGANIZATION REPORT NO MRC-DA-705
9. PERFORMING ORGANIZATION NAME AND ADDRESS Monsanto Research Corporation 1515 Nicholas Road Dayton, Ohio 45407		10. PROGRAM ELEMENT NO. 1AB604
		11. CONTRACT/GRANT NO 68-02-1874
12. SPONSORING AGENCY NAME AND ADDRESS Industrial Environmental Research Laboratory, Cin., OH Office of Research and Development U.S. Environmental Protection Agency Cincinnati, Ohio 45268		13. TYPE OF REPORT AND PERIOD COVERED Task Final, 12/74 - 7/77
		14. SPONSORING AGENCY CODE EPA/600/12

15. SUPPLEMENTARY NOTES

IERL-Ci project leader for the report is Ronald J. Turner, 513-684-4481

16. ABSTRACT

This document reviews the state of the art of air emissions from plants that manufacture marketable products via plastics processing. The composition, quantity, rate of emissions, and control technology are described. The plastics processing industry in the United States produced 1.19×10^7 metric tons of finished goods in 1976 using a variety of types of plastics which are discussed in the document. To assess the severity of emissions from this industry, a representative plant was defined for each of the 16 plastic types based on the results of this study. Source severity was defined as the ratio of the maximum time-averaged ground level concentration of a pollutant to the primary ambient air quality standard for criteria pollutants. Hydrocarbon source severities ranged from 4.2 to 98 for polyacetal and polyurethane manufacture, respectively. Source severities for particulates are also calculated. Plastics processing contributes 2.8% of the national hydrocarbon emissions and 0.12% of the national particulate emissions.

17. KEY WORDS AND DOCUMENT ANALYSIS

a. DESCRIPTORS	b. IDENTIFIERS/OPEN ENDED TERMS	c. COSATI Field/Group
Air pollution Assessments Plastics processing	Air pollution control Source assessment Source severity	68A

18. DISTRIBUTION STATEMENT Release to the Public	19. SECURITY CLASS (This Report) Unclassified	21. NO. OF PAGES 107
	20. SECURITY CLASS (This page) Unclassified	22. PRICE

EPA Form 2220-1 (9-73)

☆ U.S. GOVERNMENT PRINTING OFFICE 1978—260-2[illegible]/4