United States
Environmental Protection
Agency

Office of Analysis
and Evaluation
Washington, DC 20460

EPA 440/2-80-083
November 1980

Water

EPA

Background Document for Modification of pH Effluent Limitations Guidelines and Standards for Point Sources Required by NPDES Permit to Monitor Continuously Effluent pH

Contents of pH Background Document

Executive Summary and Conclusions..... p. I

1. Introduction.....p. 1

1.1 Effluent Guidelines.....p. 1

1.2 National Pollutant Discharge Elimination System and The Continuous Monitoring Requirement.....p. 2

2. Technical Definition of pH.....p. 2

3. Factors Affecting pH Control.....p. 4

3.1 Wastewater Source.....p. 6

3.2 Pollutants Present in Wastewater.....p. 7

3.3 pH Control Systems.....p. 7

3.3.1 Number of Stages.....p. 8
3.3.2 Smoothing Capacity.....p. 11
3.3.3 Diversion Systems.....p. 11
3.3.4 Placement of pH Monitors.....p. 11

3.4 Maintenance.....p. 11

4. Historical Background.....p. 13

4.1 Legal Petition: Description of Contents.....p. 13

4.1.1 Industrial Report Submitted to EPA.....p. 14

4.2 Agency Data Collection Activities.....p. 15

4.2.1 Initial Agency Data Collection Activity: Agency Data Base I.....p. 15

4.2.1.1 Plant Selection.....p. 15
4.2.1.2 Data Acquisition.....p. 16
4.2.1.3 Date Base Description.....p. 17

4.2.2 Second Agency Data Collection Activity: Agency Data Base II.....p. 17

4.2.2.1 Plant Selection.....p. 19
4.2.2.2 Data Acquisition.....p. 19
4.2.2.3 Date Base Description.....p. 20

4.3 Treatment System Characteristics.....p. 24

5. General Approach and Rationale for Continuous Monitoring Compliance Criteria .....p. 25

5.1 Introduction.....p. 25

5.2 Support of Modified pH Limitations.....p. 36

5.3 Expected Value and Variance of Total Monthly Excursion Time..p. 46

5.4 Nonparametric Analysis of Number of Monthly Violations.....p. 49

6. Agency Response and Position on Technical Conclusions Submitted in 1978 Petition.....p. 51

° References.....p. 53

° Acknowledgements.....p. 54

° Appendix

- Real/Apparent Frequency Distributions of Excursion Time by Plant
- Combined Agency Data Bases
- Cleary, Gottlieb, Steen and Hamilton Industrial Petition
- pH Under Continuous Monitoring

EXECUTIVE SUMMARY AND CONCLUSIONS

The information presented in this report evolved in response to a petition directed toward the Environmental Protection Agency from various industries seeking relief from absolute compliance of the 6-9 pH categorical standard when continuous monitoring is required. The standard of pH 6-9 was initially intended to apply to those situations for which discrete samples (i.e., grab or composite) were to be monitored for pH. This sampling procedure monitors pH at fixed instantaneous moments in time. As such the determination of pH values outside the 6-9 range based on discrete sampling is dependent on when and how often the samples are drawn. Recently, some permittees have been required (through the NPDES permit system) to monitor pH using continuous pH monitoring instrumentation. This monitoring instrumentation produces a continuous 24 hour reading of pH on a minute by minute basis. Because of the change in monitoring techniques values outside the 6-9 range are now recorded as well as the total duration time outside the range and the maximum/minimum pH values outside the 6-9 range. According to the petition the standard of pH 6-9 intended for discrete sampling situations requires modification because of the introduction of this more thorough monitoring schedule. Two Agency data collection activities in conjunction with Agency and industry data analyses form the basis for the modified pH regulation. The Agency contends that well-operating and properly maintained plants when required to monitor pH continuously, can maintain compliance with the categorical pH standard 6-9 at least 99 percent of the time on a monthly basis and that individual excursions should be limited to no more than 30 minutes. However, local water quality conditions may require setting an effluent pH limitation considerably less than the thirty minutes proposed. Permit writers may impose more stringent limitations when local water quality conditions warrant such action. The Agency evaluation and response to the petition is in Section 6.

In Section 1 of this document the absolute pH regulation is discussed with respect to discrete and continuous monitoring situations.

Section 2 of this document presents a technical definition of pH.

In Section 3, factors which affect pH control are discussed. The section addresses the factors of wastewater sources, pollutants, pollution control systems, and maintenance in relation to pH control.

In Section 4, the major activities which resulted in the Agency's development of the modified pH standard are presented.

Section 5 presents the results from examining the two Agency data bases with respect to long term compliance and monthly compliance for the modified pH compliance specifications. Additionally a plant specific description of the frequency of events outside the 6-9 range (identified as excursions) exceeding the proposed Agency individual excursion duration time limit is presented.

Section 6 presents the Agency response and position on the technical conclusions submitted in the 1978 petition.

1 INTRODUCTION

1.1 Effluent Guidelines

In 1972, the Federal Water Pollution Control Act was amended to establish a regulatory system with abatement requirements, enforcement procedures, and penalties for violations. The 1972 amendments required the Environmental Protection Agency (EPA) to establish national effluent guidelines for both municipal and industrial dischargers.

Effluent guidelines which govern levels of pollutants in discharges of industrial wastewaters developed under these amendments for the Best Practicable Control Technology (BPT) affecting pH were first proposed in 1974; for almost all of the guidelines, the standard was to maintain control of pH at levels between 6 and 9 of discharged wastewaters. Examples of exceptions to the 6-9 standard are; secondary aluminum smelting of non-ferrous metal manufacturing which is required to maintain its effluent pH within the range 7.5 to 9 and deflourinated phosphate rock of the phosphate manufacturing category is required to maintain its effluent pH between 6 and 9.5. However for purposes of this document effluent pH within the 6-9 range is the categorical standard of concern.

To comply with these guidelines, certain industrial plants including inorganic chemical manufacturing, iron and steel manufacturing, and fertilizer manufacturing--installed equipment designed to control pH at this level. Initially, to set a basis for BPT, data on pH were obtained via the use of either grab samples or composite samples.

Grab samples, taken at a given instant in time, represent the conditions that exist at the moment of sampling and not necessarily the conditions at any other time. These samples are often used to corroborate the results of composite samples. A composite sample is made up of a number of discrete samples taken during a predetermined time period. It therefore consists of a series of grab samples. The discrete samples comprising the composite sample are collected at equal time intervals. If the flow rate of the effluent is constant, equal volumes of each discrete sample are combined. If flow is variable then these volumes are in proportion to the flow rate. Composite samples are used to characterize highly variable waste streams and to provide average discharge concentrations. In this document all pH values lower than 6 or higher than 9 are defined as excursions. When grab or composite samples are used, the detection of a pH excursion depends upon the samples being drawn simultaneously with the occurrence of the excursions. Even if an excursion were detected, there would be neither assurance that the sample was obtained at the maximum point nor data to determine the duration of the excursion.

1.2 National Pollutant Discharge Elimination System And Continuous Monitoring Requirements

The National Pollutant Discharge Elimination System (NPDES), is the vehicle through which the national effluent guidelines are implemented at industrial plants. The system requires that industries discharging into navigable waters obtain NPDES permits which limit the kinds and quantities of pollutants that may be discharged. These permits are issued at the local level, based on the national standards, and take into consideration for each individual plant economic factors, technical feasibility, effluent characteristics, quality of the receiving water, the use classification of the receiving water, and state water quality standards.

When effluent pH is highly variable, an NPDES permit may require that continuous pH monitors be installed. A continuous monitor is essentially an electronic probe, located in the effluent, connected to an amplification unit and a recorder. The recorder uses a moving chart and a pen which responds to the amplified voltage signal, continuously tracing the pH level on the chart. There are two advantages of using continuous monitors. First, continuous monitoring ensures the observation of all excursions outside the pH 6 to 9 range; and second, the duration and peak value of each excursion are measured. Even for an excursion which is of short duration, a narrow, sharp peak is recorded. The same peak would probably be missed if grab samples were used.

The results of continuous pH monitoring differ from those obtained by discrete sampling because of the monitoring procedures. Discrete samples are individual values of wastewater taken for the purpose of chemical analysis and reporting. These discrete samples may be taken by grab or composite method. Grab samples are drawn at a single instant in time. A composite sample consists of a series of three or more smaller samples taken over a specified time period and combined into a single, larger sample for a single analysis or measurement. Because they are not taken continuously, discrete samples (both grab and composite) do not measure all excursions. Moreover, composite samples may mask short-term excursions by blending a single excursion sample with others which do not indicate excursions. Breakdowns and errors on the part of process plant and treatment system equipment can cause discharge of effluent outside the permissible pH range. Continuous monitors will record all excursions resulting from these and other conditions.

Problems with pH measurements obtained by continuous monitoring results stem from either monitor breakdowns or instrument and calibration errors. The former produces no results, while the latter produces spurious results, including apparent excursions when none occurred or apparent compliance when pH was outside the limits of 6 and 9. Apparent excursions will be discussed later in this document.

2. TECHNICAL DEFINITION OF pH

pH is a measurement of the concentration of an acid or base present in an aqueous solution, expressed as:

$$pH = -\log_{10}(\text{hydrogen ion concentration in moles/liter})$$

or

$$pH = -\log_{10}(H^+)$$

Autoprotolysis of water results in a hydrogen (or hydronium) ion concentration and a hydroxyl ion concentration, (OH^-). Using the same approach, the concentration of hydroxyl ion can be expressed by the indicator pOH as follows:

$$pOH = -\log_{10}(OH^-)$$

For water, the product of the hydrogen ion concentration and the hydroxyl ion concentration is a constant, K_w, which is equal to 1.0×10^{-14}. The relationship of these terms is:

$$K_w = (H^+)\ (OH^-) = 1.0 \times 10^{-14}$$

and therefore

$$pK_w = -\log_{10}K_w = pH + pOH = 14.00$$

A neutral solution contains an equal concentration of (H^+) and (OH^-) ions and thus satisfies the following conditions:

$$(H^+) = (OH^-) = 1.0 \times 10^{-7}$$

$$pH = pOH = 7.00$$

pH values of less than 7 are acidic; they have a higher hydrogen ion concentration than a neutral solution, while pH values greater than 7 are basic. In water, if pOH equals zero, the pH equals 14, thus maintaining pK_w at 14[1]. Because of this property of water, pH measuring devices used for wastewater monitoring have a range of pH = 0 to pH = 14.

pH monitors do not measure the hydrogen ion concentration directly. Instead, they measure the hydrogen ion activity. This relationship is expressed as:[2]

$$E = A + B \log_{10} (a_{H^+})$$

where E is the pH meter voltage,

A and B are constants, and

a_{H^+} is the hydrogen ion activity

However, calibration of pH meters using known concentrations of hydrogen ions provide an accurate record of the hydrogen ion activity that is useful in determing both the degree of wastewater neutralization and the need, if any, for additional treatment.

3. FACTORS AFFECTING pH CONTROL

The factors that can influence both the need for pH control and the performance of pH controllers are:

- Sources of plant wastewater
- Pollutants present in wastewater
- Type of pH control system
- Maintenance of pH control system.

It is important to recognize the principles that determine control of pH and to review the technical factors that affect pH control. In general, pH of a wastewater stream is controlled by adding acid to a basic waste stream or base to an acidic waste stream. Exhibit 1 contains typical neutralization curves that illustrate the principles of pH control. These curves compare the amount of acid added (to neutralize a basic solution) with the corresponding decrease in pH. A similar figure can be drawn to demonstrate neutralization of an acidic solution by adding base. The three curves illustrate the types of situation requiring pH control which occur in industry. The sodium hydroxide (NaOH) curve represents the situation which is most difficult to control. The curve has three zones: Zones A and C showing little or no change in pH with the addition of acid, and Zone B showing an extreme change in pH with the addition of acid. The 6 to 9 range is included in the extreme-change area, Zone B. This type of situation is difficult to control, since the response to added acid is either extreme (steep slope) or nearly nil (low slope). The ideal situation for control is represented by a linear medium-sloped response to acid addition.

EXHIBIT 1. Titration of NaOH, NH_3CO_3 and Na_2CO_3 by HCl

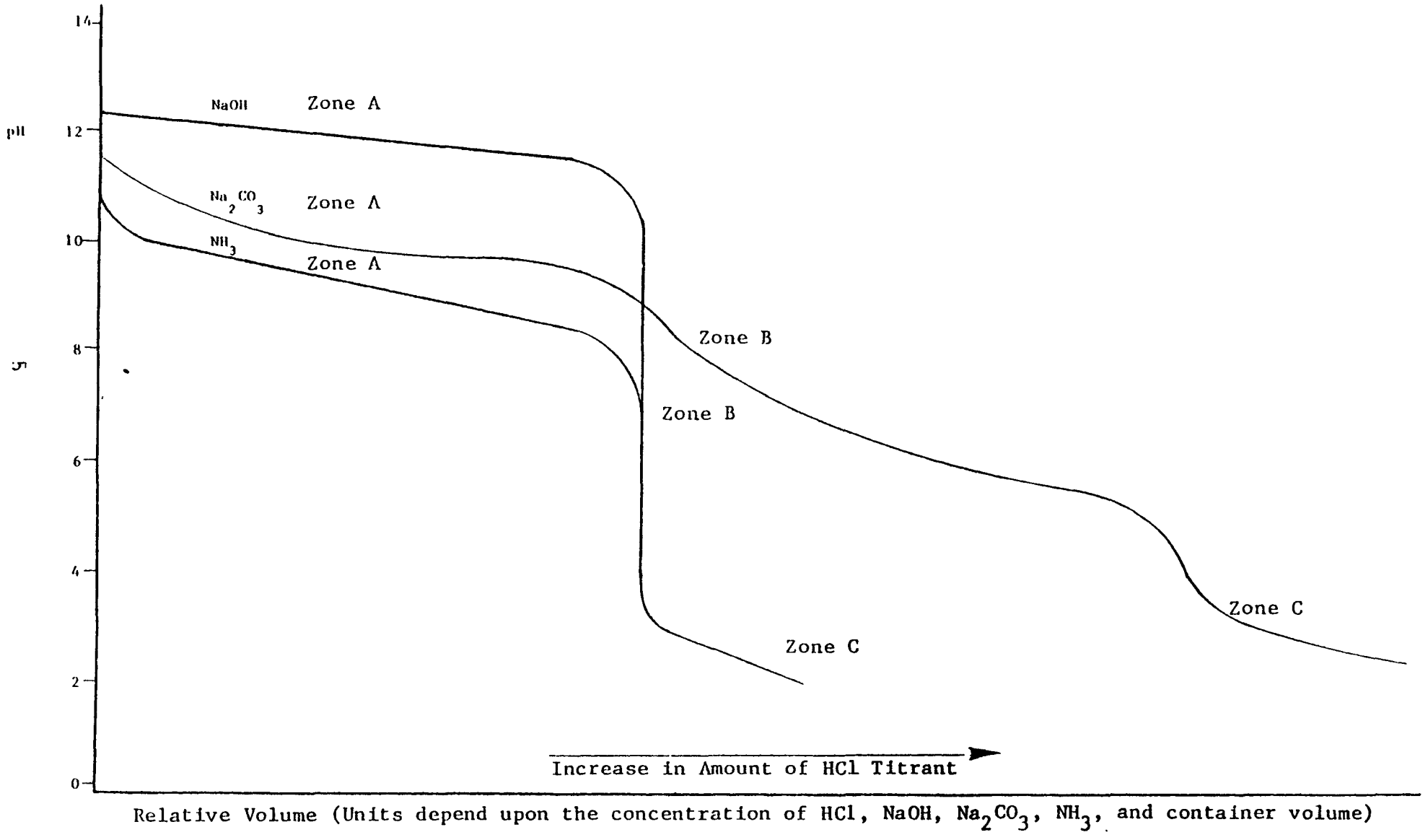

The ammonia (NH_3) curve represents a less extreme, therefore less difficult, control situation than the sodium hydroxide curve. The overall range of the ammonia curve is narrower than the range of the sodium hydroxide curve; Zone A of the ammonia curve is steeper than Zone A of the sodium hydroxide curve; and the transition from Zone A to Zone B of the ammonia curve is within the 6 to 9 pH range. These three factors indicate that with the addition of small amounts of acid, in Zone A, the pH level of ammonia will change more than the pH level of sodium hydroxide, but in Zone B, the pH of ammonia will change less than the pH of sodium hydroxide. Nevertheless, these pH changes in the 6 to 9 range of both solutions are significant, and control can be difficult to achieve.

Of the three situations illustrated, the sodium carbonate curve represents that which is easiest to control, as indicated by its moderate slope in all zones. In this case, the addition of small amounts of acid causes moderate changes in pH in all zones, at all pH values, including the 6 to 9 range.

Both ammonia and sodium carbonate act as buffers; the phenomenon of buffering can have a major effect on pH control.3/ A buffered solution tends to resist a change in pH. The presence of buffers can make treatment of effluents easier, depending on the pH of the incoming wastes and the buffering range of the pollutants. A solution with buffering capacity, such as one containing sodium carbonate (Na_2CO_3), has an inherent resistance to changes in pH. Therefore, a large quantity of acid would be required to effect a change in the pH of a Na_2CO_3 solution. On the other hand, a much smaller quantity of acid would be required to cause a change in a sodium hydroxide (NaOH) solution. A pH response curve reflecting this phenomenon would be a moderate-slope, nearly linear curve, rather than an extreme S-type curve. Because of its tendency to moderate pH extremes, wastewater with buffering capacity permits easier pH control than does wastewater without buffering capacity.

3.1 Wastewater Sources

Wastewater sources can influence the performance of a pH control system. These systems rely on mechanical devices to control effluent pH. Because mechanical devices cannot respond quickly enough to severe fluctuations in wastewater acid or base loadings, systems which employ these devices are correspondingly limited in their ability to control pH levels.3/4/ Sources of wastewater which have acid or base loadings that are highly variable can create problems in pH control. Often, installation of large equalization volumes3/ is necessary to balance the acid loadings. Equalization volume consists of a tank or basin used to accumulate wastewater flows from two or more sources. In this step, fluctuating flows are combined in order to balance or equalize the final pH level. Sources of wastewater with relatively constant acid or base loadings are generally easier to control by the use of mechanical systems.3/4/

Spills and intermittent dumps of acids or bases are common examples of industrial sources of abrupt changes in wastewater pollutant loadings. Ion exchange regeneration, consisting of batch discharges of strong acid and base, is another common example of variable waste loading from industrial sources. A strong-acid leak into non-contact cooling water is a more dramatic example of variable

loading. When a leak occurs, the non-contact cooling wastewater stream may experience surges of low (or high) pH which can exceed the neutralizing capacity of the pH control plant. These surges are know as "shock loads."[3] In some plants, rainwater runoff can be another source of wastewater producing variable loading. There are several examples of industrial sources of nearly constant acid or base loadings. These constant load sources are easier to control, as the systems need not respond to highly variable load changes. Caustic degreasing overflow is an example of an industrial constant-load wastewater source. Spent acid or caustic treating solution is a fairly common wastewater source in petroleum and organic chemical operations. Similarly, spent acid or caustic scrubber overflow is another example of a constant-load wastewater source in several industries. Wastewater sources such as the three described above are less difficult to control than those with highly variable effluent. Simple systems for their control can be designed which do not require the capacity to respond to wide fluctuations in load.[3][4]

Previous discussions of sources of wastewater demonstrate the strong influence these sources exert on the effectiveness of pH control. Many plants have both constant and fluctuating acid or base loadings. The variability of the aggregate load would therefore determine the control system design. Plants having relatively constant loading in the influent wastewater can utilize fairly simple treatment systems. Plants having extremely variable wastewater loading must employ equalization volume and possibly extra equipment to provide the required flexibility to assure adequate pH control.

3.2 Pollutants Present in Wastewater

Pollutants present in influent wastewater can have a substantial effect on pH control system performance. Many pollutant compounds are buffers and can make control easier to achieve (Exhibit 1). Pollutants can be either acidic buffers or basic buffers. Both types of buffer resist pH changes. The addition of extra neutralizing reagent is required whenever buffers are present in the wastewater because buffers resist pH changes. This same resistance, however, tends to lessen the response of the effluent pH to the effects of neutralization. Ammonia, carbonate, and acetate ions are examples of basic buffering pollutants. Ferric, nickel, bisulfite, and phosphate ions are examples of acid buffers. Zinc and aluminum ions serve as both acidic and basic buffers.

3.3 pH Control Systems

The design and operation of a pollution control system has considerable impact on its performance. Several authors[3][4] have written about systems to control pH in wastewater by neutralization. They emphasize the significance of control mode (feed-forward or feedback), number of stages, and size of smoothing capacity. An earlier study[5] suggests additional considerations: the placement of a pH monitor, and the presence or absence of a diversion system. The following system design parameters are important:

- Number of stages
- Smoothing capacity
- Diversion systems
- Placement of pH monitors.

3.3.1 Number of Stages

The two standard pH control references by Moore[3] and Shinskey[4] recommend mulistage neutralization over single-stage neutralization for pH control. In single-stage neutralization (Exhibit 2), if too much or too little reagent is added to the neutralization volume, fluctuations are passed directly into the effluent. In this case, the neutralization volume must be made extremely large to reduce these fluctuations, especially in an unbuffered solution such as the one containing sodium hydroxide. Moore[3] claims that placing a second stage of neutralization after the first stage (Exhibit 3) offers several advantages. The second stage reduces fluctuations occurring in the first stage at the "knee" of the pH response curve (Exhibit 1), allowing the effluent pH a greater degree of sensitivity to the addition of neutralization reagent. Although operation at a "knee" also causes more fluctuations, these fluctuations are reduced in the second stage. Therefore, superior coarse pH control occurs in the first stage, and fine or trim control is achieved in the second stage. Even finer control can be achieved by the addition of a third stage. The Agency's 1979 study[5] found that those plants having multi-stage neutralization tended to achieve a pH range of 6 to 9 more consistently than those having one-stage neutralization.

Moore[3] points out one disadvantage of mulitstage pH control: The second-stage vessel should be larger than the first-stage vessel to avoid amplification of fluctuations. Moore[3] recommends a 5-to-1 ratio of second-stage to first-stage volumes. This ratio may be made somewhat smaller if sufficient buffering capacity is present in the wastewater. Nonetheless, construction and operation of large tanks or basins of this sort can be costly.[3][4]

EXHIBIT 2: SINGLE-STAGE NEUTRALIZATION SYSTEM

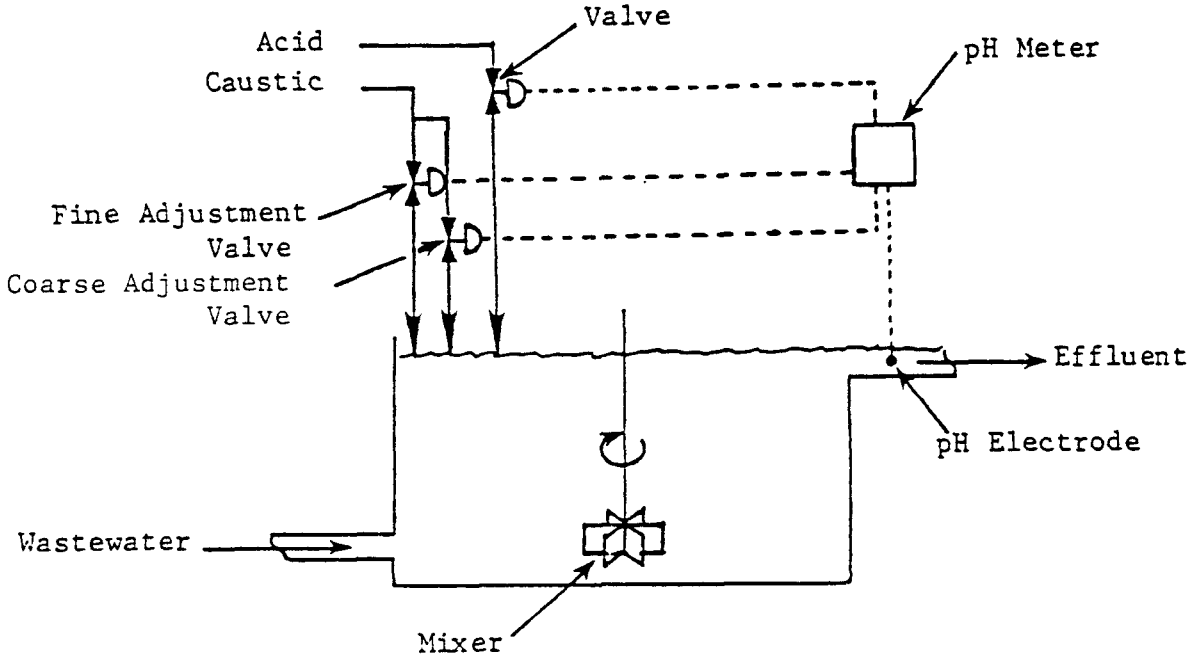

EXHIBIT 3: MULTISTAGE NEUTRALIZATION SYSTEM

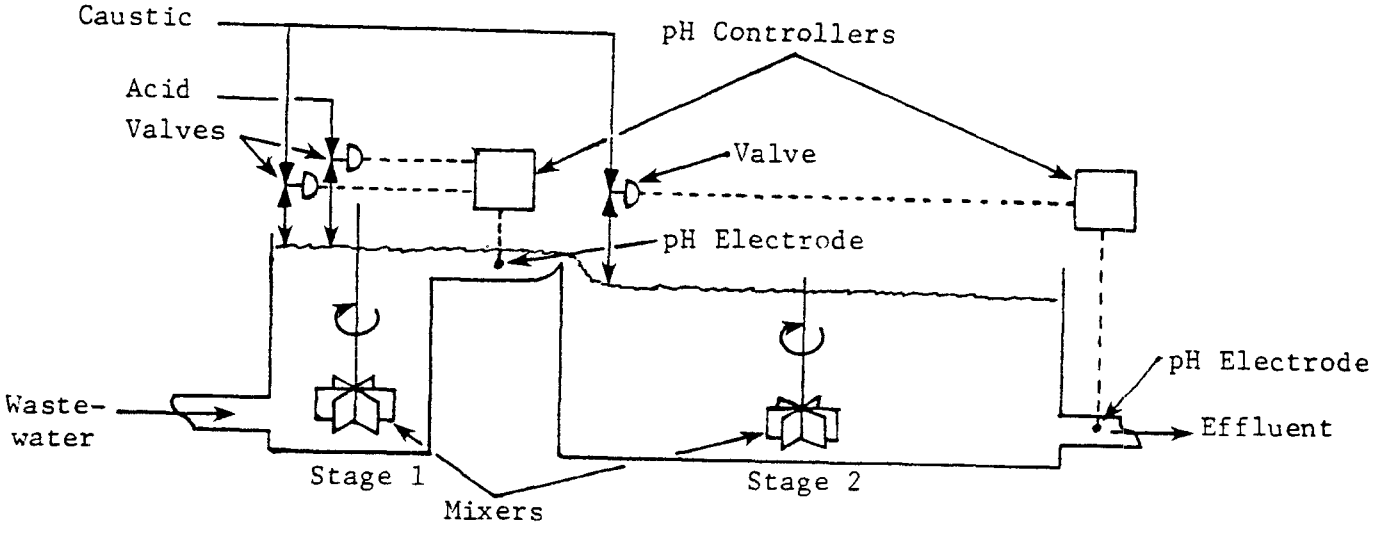

3.3.2 Smoothing Capacity

Moore[3]/ and Shinskey[4]/ also recommend use of a smoothing tank or basin as a final step before release of the treated effleunt. As the term implies, the smoothing stage tends to damp out or smooth excursions in effluent pH. Again, the presence of buffering chemicals in the wastewater can reduce the need for smoothing capacity, as the buffers themselves damp pH fluctuations. Several plants included in the 1980 EPA study[5]/ used smoothing basins before releasing their final effluents.

3.3.3 Diversion Systems

Diversion systems are "systems of last resort" which are used whenever a treatment system cannot treat the wastes fully. Diversion systems reroute effluent flow which is outside the 6 to 9 pH range into a diversion tank or basin which holds the effluent until it can be recycled through the treatment system. Moore[3]/ points out that diversion systems are of little value unless the holding capacity of the basin is sufficient to allow time to correct the problem that is affecting the effluent pH. Several plants visited during the 1979 EPA study[5]/ employed diversion systems. These systems were designed to accumulate effluent flow for several hours. The length of holding time was determined to allow plant personnel to locate and repair the unit causing the pH control problem.

3.3.4 Placement of pH Monitors

In plants using diversion systems, placement of pH monitors has an important effect on recorded results. If a plant's pH monitor were located where the effluent would gather when flow is diverted, the pH recorder would continue to indicate an effluent pH reading, even though no effluent was being discharged.[5]/. These apparent excursions are defined to be "technical excursions." Several plants visited during the 1979 EPA studies[5]/[6]/ had recorded technical excursions. The recording of such excursions can be avoided by the proper location of pH monitors.

3.4 Maintenance

Maintenance is required for all components of a pH control system. Lack of adequate maintenance can result in erratic or poor pH control.

Continuous control of effluent pH is achieved by the use of a "pH recorder-controller." This system consists of three parts: (1) pH electrodes, (2) a pH recorder, and (3) a pH controller (Exhibit 4). Electrodes produce an electrical signal (voltage) that is sent to the recorder and controller. This voltage

EXHIBIT 4: pH RECORDER-CONTROLLER

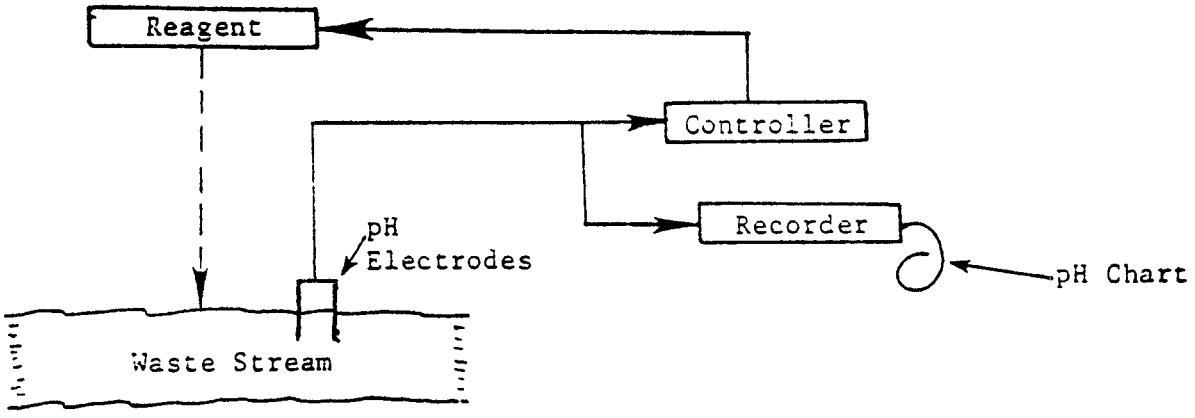

is proportional to the pH of the water in which the electrodes are placed. The recorder contains a pen and a chart drive. The position of the pen changes in relation to the magnitude and sign (+ or -) of the pH signal. The chart drive moves the paper at a specific rate. The controller contains a comparision unit which compares the magnitude and sign of the incoming pH signal to the value of a single preset control point (set point). The controller then produces another electrical signal proportional to the difference between the incoming pH signal and the set point. This controller signal is sent to the reagent unit and determines the amount of neutralizing reagent that is added.

Maintenance of electrodes is particularly important to both the precision and accuracy of pH control and monitoring. Three types of electrode maintenance are required: (1) calibration, (2) cleaning, and (3) replacement. The voltage output of pH electrodes tends to drift when electrodes are left in continuous service. Calibration compensates for this drift. Calibration is accomplished by immersing electrodes in a known pH solution and adjusting the electrical signal to give a reading corresponding to the solution's pH. Periodic calibration is recommended, and some plants calibrate as often as once a day. Solids, tars, and oils present in waste streams can hinder the performance of electrodes and adversely affect pH measurement. Electrodes exposed to these substances must be cleaned periodically to maintain their accuracy. The necessary frequency of cleaning depends upon the nature of the waste stream. When in continuous use, pH electrodes deteriorate over time; therefore, calibration is required more frequently as time in service increases. When electrodes are replaced periodically, the need for calibration is less frequent.

Recorders and electrical signal systems require periodic voltage and current checks; recorder pens and chart drives must be inspected and oiled regularly; and unless they receive frequent maintenance, the performance of controllers will be affected adversely. Maintenance, therefore, is an important factor affecting pH control system performance. Proper periodic calibration, inspection, cleaning, and replacement of critical system components have a significant impact on both the recording and control performances of a pH control system. Lack of adequate maintenance can result in inaccurate recordings and unreliable control.

EPA recommends that continuous monitoring be serviced and calibrated as per the manufacturers specifications or guidance in conjunction with consideration of the characteristics of the wastestream being monitored.

4. HISTORICAL BACKGROUND

4.1 Legal Petition: Description of Contents

In August, 1978, the Environmental Protection Agency received a petition from Cleary, Gottlieb, Steen and Hamilton regarding "pH Effluent Limitation Guidelines and Standards of Performance for Certain Manufacturing Point Source Categories." This petition requested the revision of certain EPA pH effluent limitations guidelines for existing plants and of standards of performance for new sources promulgated under authority of Sections 301(b), 304(b) and 306(b)

of the Federal Water Pollution Control Act. Specifically, the Agency was requested to (1) rescind the Agency's internal policy limiting the pH of effluent discharge to a range of 6.0 to 9.0 on a continuous basis for industrial point source categories, and (2) revise the pH parameters in effluent limitations guidelines for existing plants and revise the standards of performance for new sources to permit excursions outside the 6 to 9 pH range for a total period of at least one percent of a month, with excursions below pH 3.5 or above pH 11 being limited to 15 minutes per excursion.

The categories and subcategories listed in the petition included (but were not limited to) the following:7/

1. Inorganic Chemicals (40 CRF Part 415): Subpart D (Calcium Chloride); Subpart F (Chlorine and Sodium or Potassium Hydroxide); Subpart G (Hydrochloric Acid); Subpart H (Hydrofluoric Acid): Subpart J (Nitric Acid); Subpart O (Sodium Carbonate); Subpart U (Sulfuric Acid): Subpart V (Titanium Dioxide): Subpart W (Aluminum Fluoride Production); Subpart Y (Ammonium Hydroxide); Subpart AP (Hydrogen Cyanide); Subpart AV (Strong Nitric Acid); Subpart BF (Sodium Silicofluoride Production)

2. Fertilizer Manufacturing (40 CFR Part 418): Subpart B (Ammonia); Subpart C (Urea); Subpart D (Ammonium Nitrate); Subpart E (Nitric Acid)

3. Iron and Steel Manufacturing (40 CFR Part 420)

4. Non-Ferrous Metals Manufacturing (40 CFR Part 421): Subpart A (Bauxite Refining); Subpart B (Primary Aluminum Smelting); Subpart C (Secondary Aluminum Smelting)

5. Phosphate Manufacturing (40 CRF Part 422): Subpart A (Phosphorus Production); Subpart B (Phosphorus Consuming)

6. Organic Chemical Manufacturing (40 CFR Part 414): Subparts covering plants manufacturing, or using, in manufacturing process, strong acids or bases.

4.1.1 Industrial Report Submitted to EPA

In conjuction with the petition, Cleary et al., submitted a report on the performance of pH systems at several industrial facilities.8/ The report concluded:

- Control of pH in the 6 to 9 range on a continuous basis is extremely difficult for highly acidic raw wastes

- A compliance level of 99 percent achievement of pH 6 to 9 is reasonable on a monthly basis; excursions outside the pH 3.5 to 11 range can be limited to less than 15 minutes

- Number of excursions is not a valid measure of pH control system performance

- Costs rise rapidly as plants attempt to improve performance to levels exceeding 99 percent (of time) per month.

The industry report did not, however, contain a uniform data base or analysis to support conclusions regarding plant performance under continuous pH monitoring. The Agency therefore undertook a study to assess the validity of the conclusions submitted by industry. Further, this study would document both the performance of the control systems and their recorded capital and operating costs.

4.2 Agency Data Collection Activities

In order to examine and evaluate control systems currently in use, the Agency conducted the two data collection and analysis activities described below.

4.2.1 Initial Agency Data Collection Activity: Agency Data Base I

The Agency collected and analyzed data to aid its assessment of current pH control systems. A pH data base was constructed from six plants in various categories and subcategories in several industries. The pH data was used to generate plots, cross tabulations and tables which illustrated relationships among the data in support assessments of pH control for the various plants.

4.2.1.1 Plant Selection. The selection of plants was a primary consideration in the development of this data base. Sixty-one candidate plants were identified from a 1978 report[8]/ and by EPA regional offices and State water enforcement personnel. Nine plants were selected, based upon the following criteria:

- Treatment systems which aim primarily at controlling pH
- No biotreatment
- Inclusion in raw waste stream of process water or contact cooling water
- Recommendation of treatment system as well-operating
- Distribution among several industries.

An accurate assessment was ensured by examining treatment systems that control only pH. Treatment systems for other effluent characteristics were not considered. The technology employed by plants considered in this study is single and multistage neutralization and ion exchange. In the ion exchange process, an acid or base in the form of an insoluble resin is used to treat wastewater. This process contrasts with conventional neutralization, which uses soluble acid or base for treatment. Since both processes effectively achieve either acid or base neutralization of the wastewater solution, the results of effluent treatment by ion exchange are similar to those of treatment by standard neutralization.

Plants utilizing biotreatment as a primary treatment method were not included in this analysis because the technology is fundamentally different from that of standard neutralization and because pH control is often incidental to the purposes of biotreatment. Wastes subject to biotreatment are neutralized before treatment. This neutralization does not need fine control, since biotreatment itself causes pH changes. These pH changes are variable and depend both upon the nature of the plant wastes and upon the type of biotreatment technology.

Only plants operating at an acceptable level of effectiveness were selected to be studied, since the results of this study were intended to develop standards which all pH control systems can achieve through adequate design, operation, and maintenance. Plants on the candidate list were contacted by telephone for further screening, using the following criteria:

- Operation of an automatic continuous pH recorder to monitor treatment of effluent streams
- Availability of at least 6 months of pH recording charts for treated effluent
- Operation of control system during the period of a plant visit; cooperation with such a visit.

Since continuous monitoring of pH was the subject of this study, only plants with this type of monitor were selected. Since a primary focus of this effort was examining pH control performance over a long term, the minimum period of data desired was 6 months. Observation of actual plant operation was necessary in order to appreciate the performance of pH control equipment. Seven plants were selected for visits, based upon the criteria listed above. All seven plants were visited between November 28, 1978 and December 18, 1978. However, pH data could not be obtained from one of these plants because the State of California (in which the plant is located) does not require a plant to retain strip charts once a violation is reported.

4.2.1.2 Data Acquisition. At each plant investigators extracted data from pH recording charts. Excursions above and below the pH range 6 to 9 were entered on the data forms.

Data recorded during the plant visit phase of this study were:

- Date of excursion (month, day, year)
- Time (on a 24-hour clock) of excursion
- Maximum/minimum pH of excursion
- Duration of excursion
- Reason for excursion.

For each excursion a height equal to the peak height of the excursion curve and a width equal to the base of the excursion curve were recorded. An example of this extraction procedure is shown in Exhibit 5. This method provided a rapid, consistent means of extracting data. An excursion was recorded on data forms whenever the trace on a continuous pH recording chart indicated a pH

greater than 9 or less than 6. All types of excursions were recorded, regardless of cause, including those resulting from instrument error and calibration. Details can be found in the referenced report.[5]

4.2.1.3 Data Base Description. The raw data from each observed excursion were compiled into machine-readable form. Month, day and year were entered as separate fields for each excursion. Time was entered, using 24-hour clock notations. The maximum/minimum pH of each recorded excursion were entered, as well as the duration of the excursion in minutes. Reason codes were assigned, based upon reasons recorded on the data sheets for each excursion, according to the following coding system:

Reason Code I	Reason Type
1	Process Upset
2	Treatment System Upset
3	Technical Excursion--Excursion recorded, but no flow to surface water was recorded.
4	Other
5	Unknown
6	Instrument Error

In this coding scheme, process upsets are unexpected changes in the manufacturing process that can cause a change in the treatment system effluent pH. An acid leak is an example of a process upset. A treatment system upset is a malfunction of the treatment system that causes a change in the effluent pH--for example, treatment chemical pump failure. A technical excursion occcurs when the recording chart indicates a pH excursion,but other records indicate that there has been no effluent flow from the plant during this period. This type of excursion was observed only at plants with diversion systems, where it occurred when the diversion valve was in operation. Other excursions are those which occur for reasons that are known, but are not included in Reasons 1, 2, 3, or 6--for example, an excursion caused by treatment plant shut down because of flooding conditions. The unknown reason code was assigned to excursions for which a reason was neither recorded nor obtainable. When an excursion is indicated on the recording chart because of pH monitor malfunction or calibration, the reason code designating that recording is instrument error.

Reasons 3 and 6 of Reason Code I represent situations in which an excursion is indicated on the recorder chart, but an excursion may not have actually occurred. These observations can be considered "non-real" or "apparent." The remaining reasons under Reason Code I (1, 2, 4, and 5) are considered "real" because they represent observations made of an actual excursion.

4.2.2 Second Agency Data Collection Activity: Agency Data Base II

EXHIBIT 5:

Illustration of Data Extraction Methodology Used for Obtaining Data Base I

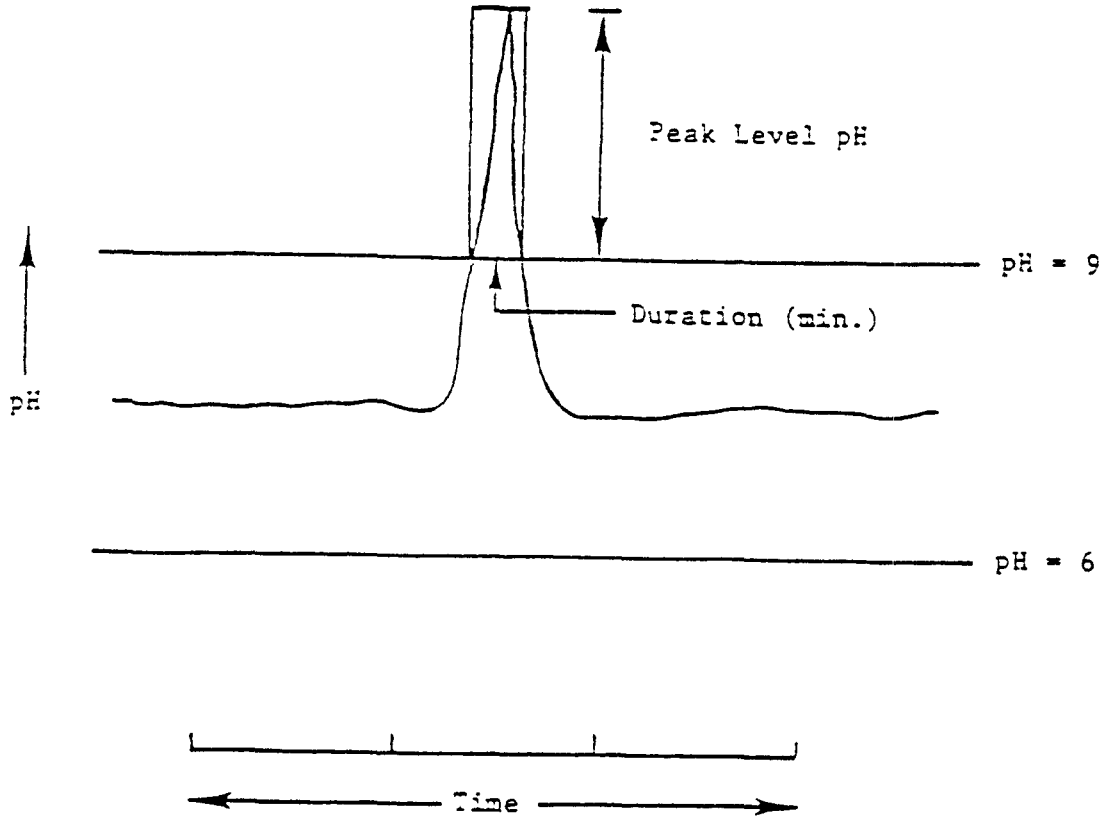

4.2.2.1 Plant Selection. EPA commissioned a second study, the results of which were presented by EPA in October, 1979.[6] The objectives of the study were to describe pH treatment systems in the inorganic chemicals industry, to establish a data base on pH compliance time within the present 6 to 9 limits, and to perform analyses on that data base. This study was performed to present an assessment of pH control in the inorganic chemicals industry.

To achieve these objectives, nine subcategories for this industry were initially chosen because the raw wastes from their production processes would likely present pH control problems. However, because of other considerations, some potentially appropriate subcategories could not be included.

During the course of the study, sodium dichromate was dropped from the list of nine subcategories, while chlor-alkali was added. The final list of subcategories studied is as follows:

Aluminum Fluoride
Chlor-Alkali
Hydrofluoric Acid
Hydrochloric Acid
Hydrogen Cyanide
Sodium Bisulfite
Sodium Silicate
Sulfuric Acid
Titanium Dioxide (Chloride Process)

Plant visits were arranged on the basis of the following criteria:

- Plant possession of automatic recorder(s) that continuously monitor all final effluent streams at each point of discharge
- Availability of at least six months', but preferably one year's pH recordings for discharged effluents
- Plant possession of excursion records
- In some subcategories, the type of process used in production was also a factor in selection.

Because of process requirements and of various state or local regulations, the number of plants in any given subcategory meeting the preceding requirements was often limited; and in the case of sodium dichromate, no plant could be found that met the criteria.

After preliminary telephone contact, plant selections were made; visits were scheduled; and the process of data collection was begun.

4.2.2.2 Data Acquisition. Three objectives were set for each of the plant visits. The first and primary objective was to tabulate excursion data, including explanations. The second was to review the wastewater treatment systems as they affect pH and the raw waste characteristics as they relate to pH in an attempt to evaluate data from the actual systems involved. The final objective,

secondary in nature, was to obtain information on other factors affecting pH control, such as the pH and volume of other process wastes being treated, type of pH equipment used, and costs involved.

As in the earlier Agency study, the data were recorded in tabular form to include date, time, maximum (minimum) pH values, duration, reason, and remarks for each pH excursion. The data for each plant were later revised as necessary and analyzed with respect to the various types of excursion.

The peak value of the pH and the duration of the excursion are the pertinent factors for recording each excursion. The method used for extracting these values is similar to that used in the Agency's first study. For each excursion, the maximum (minimum) pH was recorded as the pH for the entire duration, regardless of multiple peaks, as long as the pH recording line never reentered the 6 to 9 bounds. This process is illustrated in Exhibit 6A. The duration was measured from point of leaving the control range to point of reentering the control range. If, as a result of instrument error, the recording oscillated above and below the bounds for a short period of time, measurements were necessarily taken in a different manner (Exhibit 6B). In this case, time above pH 9 and below pH 6 would be divided into two excursions. Peak values are considered to be the minimum and maximum pH values observed during the excursion. This treatment of instrument error differs from that used in compiling Data BASE I. In DATA BASE I, excursions such as the one shown in Exhibit 6B would be recorded as a series of separate peaks (11 above pH and 12 below pH 6).

4.2.2.3 Data Base Description. Raw data were collected, coded, and processed in a manner similar to that used in the Data Base I study. Since these two data bases were compiled in separate and distinct activities within the Agency, the reason codes used are not identical. The reasons for excursions were coded in Data Base II as follows:

Reason Code II	Reason Type
1	Process Upset
2	Treatment System Malfunction/Shutdown
3	Instrument Error
4	Instrument Calibration/Maintenance
5	Operator Error
6	Diversion in Operation, but pH Monitor Still Recording (flow stopped or diverted, but the position of the pH probe caused recording pH of water that was not being discharged)
7	Other (apparent only)
8	Unknown
9	Emergency Operation
10	Spills or Leaks
11	Rainwater Overflow
12	Other (actual)

EXHIBIT 6: Illustration of Typical Excursions and Data Extraction Methodology Used in Obtaining Data Base II

A. Typical Excursion Peak

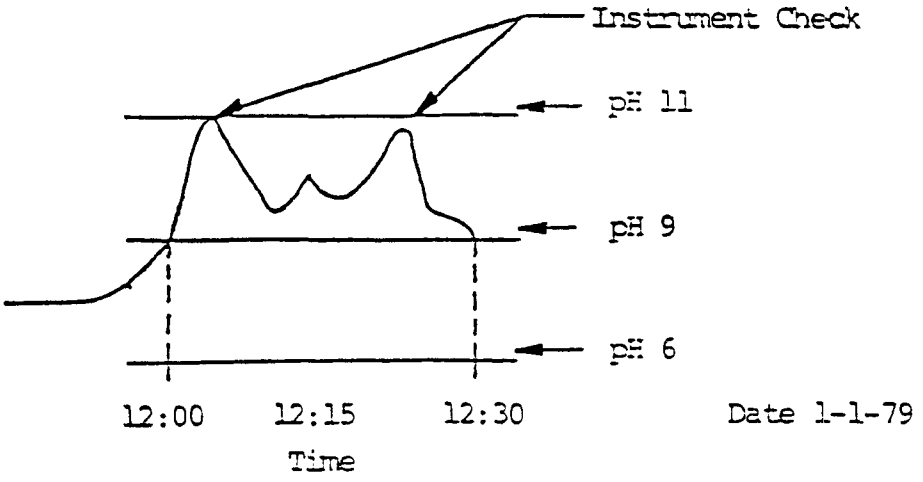

The example excursion above would have been recorded as:

Month - January 1979

DATE	TIME	PEAK	DURATION (min)	REASON
1-1	12:00	11.0	30	4

B. Non-Steady Excursion

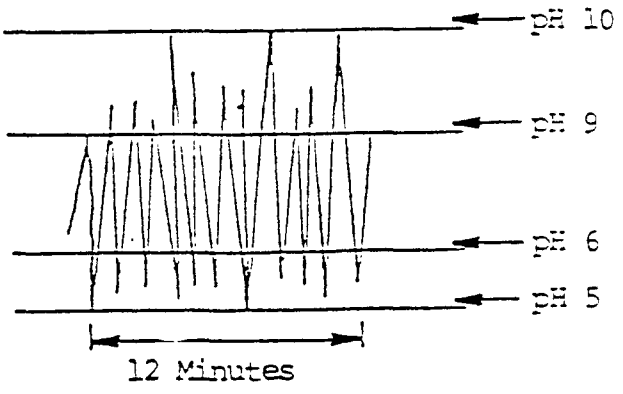

A maximum "total" excursion of six minutes duration with a peak pH of 10 along with a minimum "total" excursion of six minutes with peak pH of 5 would have been recorded.

These reason codes are defined as follows:

1. Process Upset - production problems or unexpected interruptions in production resulted in pH excursions.

2. Treatment System Malfunction/Shutdown - failure of the treatment system itself to handle wastes properly, or shutdown of that system, led to pH excursions.

3. Instrument Error - the recorder showed an excursion when in fact there was none, because the instrument malfunctioned or was out of calibration.

4. Instrument Calibration - regular maintenance (i.e., cleaning the probe or calibrating the recorder) resulted in a recording of pH outside the 6 to 9 limits, when in fact there was no excursion.

5. Operator Error - the treatment system failed because of human error. (Overcorrection during manual treatment of wastewater is designated by Reason Code 2.)

6. Diversion in Operation - discharge was either merely blocked or sent to a diversion pond or tank as a result of being out of specification for treated effluents; but the pH monitor, because of its placement, continued to record pH outside the 6 to 9 limits during the diversion period.

7. Other - the recording of an apparent excursion could be explained by a reason code other than those listed in existing codes. Originally, this reason code include those excursions coded as Reason 12, and referred to both real and apparent excursions to ensure more detailed statistics.

8. Unknown - no reasons could be attributed to the occurrence of an excursion.

9. Emergency Operations - an excursion was uncontrollable for such reasons as plant shutdown or power failure.

10. Spills or Leaks - any spill or leak in any area of the plant, treatment, process or general working area which created pH problems that the treatment system was not designed to handle.

11. Rainwater Overflow - because of the fairly frequent occurence of this problem, this reason was added to account for those times when excursions resulted from treatment system overload from heavy rainfall.

12. Other - there was an actual excursion that could be explained by a reasons other than those listed in existing codes.

Reason Code II can be divided into "real" and "apparent" groups in the same manner as Reason Code I. For Reason Code II, the apparent reasons (when no actual excursion occurs) are Reasons 3, 4, 6, and 7. The remaining reasons (1, 2, 5, 8, 9, 10, 11, and 12) represent observations of excursions that correspond to actual discharges and are therefore considered "real".

4.3 Treatment System Characteristics of Data Base Plants

All plants except one in the combined data base (Data Base I and Data Base II) use neutralization systems. The one exception uses ion-exchange technology. Of the plants that neutralize their wastewater, five have multistage systems, and one neutralizes waste only if the wastewater has been diverted. Two plants use some form of biotreatment; one has an aeration process; and one uses polymer additives. Four plants have settling basins. Some of the plants have holding ponds; and two plants have diversion systems in addition to gypsum stacks (ponds), which can act as redundant diversion systems. For detailed discussion of BPT pH treatments systems with respect to industry specific categories the reader is referred to EPA industry specific Development Documents for Effluent Limitations Guidelines and Standards.

5. General Approach and Rationale for Continuous Monitoring Compliance Criteria

5.1 Introduction

As discussed earlier in this document categorical standards for effluent limitations guidelines generally required that the pH of plant effluent be maintained in the range of 6 to 9, and some permits require that pH be monitored continuously. Although data indicate that achievement of this standard 100 percent of the time is not realized with Best Practicable Control Technology (BPT) treatment systems, a standard can be established for a percentage of time over which a plant must achieve the required range.

The lack of perfect compliance with the standard of pH 6-9 at all times is in large part due to the application of a categorical standard, which was intended for discrete instantaneous sampling (grab or composite), to a complete enumeration of a time continuum. That is, a standard was developed for use with one type of sampling mechanism but applied to more thorough monitoring/sampling requirements. It has been and is Agency policy to set a standard for which the probability of violation at a given instant by a well designed and maintained treatment system is not greater than approximately .01. Evidence of this policy is displayed in the derivation of effluent limitations guidelines for industrial pollutants based on the estimated 99th percentile of the pollutant distribution. An example of the application of this policy is exhibited in the Inorganic Chemicals Industry BPT Development Document.

When the monitoring schedule specifies grab or composite samples, the detection of a departure from the standard is a rare event because the departure must coincide with the time of sampling. Such discrete sampling (i.e., grab or composite) provides no information on the maximum/minimum value of the excursion or its length of duration. With continuous monitoring, however, all departures will be detected. Additionally with continuous monitoring the maximum/minimum pH value and the length of duration for each excursion are obtained. However, the introduction of continuous monitoring into permit requirements necessitates a modification of the current pH categorical standard requiring compliance all the time.

As discussed earlier, two Agency uniform data collection activities provide information on the performance of pH control in several industries. The six plants in the first Agency study (DATA BASE I) were distributed among such diverse industrial categories/subcategories as inorganics, organics, and iron and steel categories, as well as the bauxite, titanium dioxide and sulfuric acid subcategories. Each of these plants provided one year of strip charts from continuous pH recorders. The second Agency data collection activity (DATA BASE II) provided similar continuous monitoring data for eight inorganic chemicals industry plants. The plants of the second study were distributed over the following inorganic chemicals subcategories; aluminum fluoride, chlor-alkali, hydrochloric acid, hydrofluoric acid, hydrogen cyanide, sodium bisulfite, sodium silicate, sulfuric acid, and titanium dioxide. Plants provided 6 to 16 months of pH recorder strip charts. Data collected and coded under this activity were similar in nature to that of the first Agency data collection activity.

For each of these data bases an excursion is a continuous period when the plant's effluent is outside the range 6-9. For each excursion, the date and time the excursion began, an associated reason code (which identified the reason for the excursion based on comments obtained from plant logs and/or pH recording sheets), the maximum or minumum pH values and the total duration time in excursion were entered into each of the data bases. The two data bases comprise the information used in this report for evaluation of pH standards coupled with continuous monitoring.

Three fundamental differences exist between the two Agency data collection activities. First, the initial data collection activity (DATA BASE I) was intended to be an examination of continuous pH monitoring across several industries at the categorical level. The second data collection activity (DATA BASE II) covered subcategories within the inorganic chemical industry. Second, in DATA BASE II, multiple reason codes were occasionally used to describe several interacting (i.e., contributing) reasons for an excursion in DATA BASE II. Third, as described earlier in this document DATA BASE II utilized a system with twelve reason codes while DATA BASE I's system consisted of only six codes.

In order to merge the two data bases it was necessary to review those excursions of DATA BASE II with multiple reason codes and assign a single primary reason code. To do this the comment/remark given in DATA BASE II for each multiple reason code excursion was analyzed and a decision was made as to which of the twelve possible reason codes may be considered as the initial reason for the excursion.

Since in DATA BASE I no code existed for an excursion initiated by operator error, excursions of this type were reviewed and reassigned a new reason code based on the explanation provided in the data base. The results of the aforementioned recoding are shown in Table 1. The new reason code is called RCODE on this table. This table identifies those excursions that have been reassigned a single DATA BASE II reason code.

Table 1

RCODES ASSIGNED FOR MULITPLE REASON CODE EXCURSIONS AND OPERATOR ERROR EXCURSIONS IN DATA BASE II

RCODES	PLANT	MO.	DAY	YEAR	TIME	PH...	MIN..	CODE	REASON....	EXPLANATION....
10	150	03	3	1979	0515	9.3	106	5	OPERATOR ERROR	OPERATOR ERROR RESULTING IN RETENTION TANK OVERFLOW, CAUSED A MAJOR CLEANUP AND EXCURSION PROBLEM
								10	SPILLS OR LEAKS	
10	150	03	3	1979	0710	3.3	3	5	OPEATOR ERROR	
10	150	03	3	1979	0715	9.4	5	5	OPERATOR ERROR	THE REMAINDER OF THE EXCURSIONS FROM MARCH 3 THROUGH MARCH 5 RESULT FORM ATTEMPTS TO CORRECT TANK OVERFLOW
10	150	03	3	1979	0720	2.5	4	5	OPERATOR ERROR	
10	150	03	3	1979	0725	9.5	3	5	OPERATOR ERROR	
10	150	03	3	1979	0730	3.3	10	5	OPERATOR ERROR	
10	150	03	3	1979	0740	9.3	3	5	OPERATOR ERROR	
10	150	03	3	1979	0645	4.1	4	5	OPERATOR ERROR	
10	150	03	4	1979	0842	9.4	4	5	OPERATOR ERROR	
10	150	03	4	1979	0917	9.2	12	5	OPERATOR ERROR	
10	150	03	4	1979	0930	3.6	5	5	OPERATOR ERROR	
10	150	03	4	1979	0945	9.3	32	5	OPERATOR ERROR	
10	150	03	4	1979	1020	10.6	39	5	OPERATOR ERROR	
10	150	03	4	1979	1445	9.1	3	5	OPERATOR ERROR	
10	150	03	4	1979	2305	9.1	2	5	OPERATOR ERROR	
10	150	03	5	1979	0410	9.1	10	5	OPERATOR ERROR	
10	150	03	5	1970	0502	9.3	11	5	OPERATOR ERROR	
10	150	03	5	1979	0517	9.2	3	5	OPERATOR ERROR	
10	150	03	5	1979	0520	9.2	1	5	OPERATOR ERROR	
10	150	03	5	1979	0530	9.2	3	5	OPERATOR ERROR	
10	150	03	5	1979	0537	9.2	3	5	OPERATOR ERROR	
10	150	03	5	1979	0542	9.2	3	5	OPERATOR ERROR	
10	150	03	5	1979	0550	9.2	3	5	OPERATOR ERROR	
10	150	03	5	1979	0555	9.2	3	5	OPERATOR ERROR	
10	150	03	5	1979	0603	9.2	3	5	OPERATOR ERROR	
10	150	03	5	1979	0607	9.2	3	5	OPERATOR ERROR	
10	150	03	5	1979	0616	9.2	3	5	OPERATOR ERROR	
10	150	03	5	1979	0620	9.2	3	5	OPERATOR ERROR	
10	150	03	5	1979	0630	9.2	3	5	OPERATOR ERROR	

Table 1 Continued

RCODES	PLANT	MO.	DAY	YEAR	TIME	PH...	MIN..	CODE	REASON....	EXPLANATION....
10	150	03	5	1979	0637	9.2	3	5	OPERATOR ERROR	
10	150	03	5	1979	0642	9.2	3	5	OPERATOR ERROR	
10	150	03	5	1979	0650	9.2	3	5	OPERATOR ERROR	
10	150	03	5	1979	0657	9.3	4	5	OPERATOR ERROR	
10	150	03	5	1979	0703	9.3	3	5	OPERATOR ERROR	
10	150	03	5	1979	0710	9.3	3	5	OPERATOR ERROR	
10	150	03	5	1979	0715	9.3	5	5	OPERATOR ERROR	
1	150	05	25	1979	0850	10.5	9	1	PROCESS UPSET	
								5	OPERATOR ERROR	
1	150	06	2	1979	0949	10.3	10	1	PROCESS UPSET	PROCESS UPSET, THAT WAS COMPLICATED BY A PULLED RELAY SWITCH TO TREATMENT SYSTEM
								5	OPERATOR ERROR	
1	150	06	2	1979	1653	10.6	47	1	PROCESS UPSET	SEE 0949
								5	OPERATOR ERROR	
10	782	12	4	1978	1900	5.9	5	10	SPILLS OR LEAKS	PROCESS WATER OVERFLOW TO NORTH SURFACE SEWER
								11		
10	782	02	4	1979	2210	1.9	150	10	SPILLS OR LEAKS	PROCESS LEAK TO SURFACE SEWER COMBINED WITH HEAVEY RAINFALL SEWER OVERFLOW
								11		
10	782	03	21	1979	1830	5.4	120	10	SPILLS OR LEAKS	NORTH SURFACE LINE BEING REPAIRED, SIMULTANEOUSLY LEAK IN AN ACID LINE INTO NSD CAUSE EXCURSIONS, THIS WAS COMPOUNDED BY HEAVY RAIN
								2	TREATMENT SYSTEM MALFUNCTION -	
								11		

Table 1 Continued

RCODES	PLANT	MO.	DAY	YEAR	TIME	PH...	MIN..	CODE	REASON....	EXPLANATION....
10	782	03	22	1979	2015	2.8	40	10 2 11	SPILLS OR LEAKS TREATMENT SYSTEM MALFUNCTION - SHUTDOWN	SEE 3-21
10	782	03	22	1979	2130	3.0	30	10 2 11	SPILLS OR LEAKS TREATMENT SYSTEM MALFUNCTION - SHUTDOWN	SEE 3-21
10	782	03	22	1979	2230	2.7	75	10 2	SPILLS OR LEAKS TREATMENT SYSTEM MALFUNCTION -	SEE 3-21
10	782	03	23	1979	0020	2.8	110	10 2 11	SPILLS OR LEAKS, TREATMENT SYSTEM MALFUNCTION	SEE 3-21
11	782	07	27	1979	0815	5.1	205	9 11	EMERGENCY OPERATIONS	SPILL IN SULFURIC PLANT NORMALLY ADJUSTED IN SURFACE POND, HOWEVER POND WAS OVERFLOWING DUE TP 15" OF RAIN FROM A TROPICAL STROM
6	928	03	11	1979	0415	4.3	1	4 6		PH METER WAS INCORRECT AND FLOW WAS STOPPED
6	928	03	11	1979	0440	0.0	25	4 6		SEE 0415 SAME DATE
6	928	03	11	1079	0820	13.9	10	4 6		SEE 0415 SAME DATE
6	928	03	11	1979	0900	5.6	20	4 6		SEE 0415 SAME DATE
6	928	03	11	1979	1010	0.0	20	4 6		SEE 0415 SAME DATE
6	928	03	11	1979	1200	5.6	840	4 6		SEE 0415 SAME DATE

After recoding the excursions with multiple reasons and/or operator error excursions a correspondence rule (see Table 3) was developed to convert each of the 11 remaining DATA BASE II reason codes to an equivalent DATA BASE I reason code. Almost all of DATA BASE II's reason codes correspond directly to a specific DATA BASE I reason code. The exceptions in the above correspondence rule occurred for operator errors (DATA BASE II Reason Code 5) and spills or leaks (DATA BASE II Reason Code 10). As stated earlier all operator errors were eliminated from DATA BASE II by reassigning a new excursion reason. Excursions due to spills or leaks were assigned DATA BASE I reason codes on an excursion specific basis by utilizing the comments documented in DATA BASE II. Table 2 displays the spill or leak excursions and the corresponding DATA BASE I reason code (defined as NCODE) determined from individual review of these excursions. Table 3 displays the correspondence rule converting DATA BASE II reason codes into DATA BASE I reason codes.

Table 2

SPILLS OR LEAKS ASSIGNED DATA BASE I REASON CODE (NCODE)

NCODES	PLANT	Mo.	DAY	YEAR	Time	pH	Min.	Explanation
1	102	11	17	1978	1720	3.6	540	Excursion from non-contact cooling water discharge outfall. Resulted from a ruptured hose in the sulfuric acid unloading station.
1	102	03	03	1979	1025	3.5	285	Leak in a cooler recorded in non-contact cooling outfall. Failure of pumps to handle strom water run-off short circuiting of organic plant pond.
1	150	02	10	1979	0108	4.7	17	Drying tower leak.
2	150	03	03	1979	0515	9.3	106	The remainder of the excursions from March 3 through March 5 result from attempts to correct tank overflow.
2	150	03	03	1979	0710	3.3	3	
2	150	03	03	1979	0715	9.4	5	
2	150	03	03	1979	0720	2.5	4	
2	150	03	03	1979	0725	9.5	3	
2	150	03	03	1979	0730	3.3	10	
2	150	03	03	1979	0740	9.3	3	
2	150	03	03	1979	0745	4.1	4	
2	150	03	04	1979	0842	9.4	4	
2	150	03	04	1979	0917	9.2	12	
2	150	03	04	1979	0930	3.6	5	
2	150	03	04	1979	0945	9.3	32	
2	150	03	04	1979	1020	10.6	39	
2	150	03	04	1979	1445	9.1	3	
2	150	03	04	1979	2305	9.1	2	
2	150	03	05	1979	0410	9.1	10	
2	150	03	05	1979	0502	9.3	11	
2	150	03	05	1979	0517	9.2	3	
2	150	03	05	1979	0520	9.2	1	
2	150	03	05	1979	0530	9.2	3	
2	150	03	05	1979	0537	9.2	3	
2	150	03	05	1979	0542	9.2	3	
2	150	03	05	1979	0550	9.2	3	
2	150	03	05	9179	0555	9.2	3	
2	150	03	05	1979	0603	9.2	3	
2	150	03	05	1979	0607	9.2	3	

Table 2 Continued

NCODES	PLANT	Mo.	DAY	YEAR	Time	pH	Min.	Explanation
2	150	03	05	1979	0616	9.2	3	
2	150	03	05	1979	0620	9.2	3	
2	150	03	05	1979	0630	9.2	3	
2	150	03	05	1979	0637	9.2	3	
2	150	03	05	1979	0642	9.2	3	
2	150	03	05	1979	0650	9.2	3	
2	150	03	05	1979	0657	9.3	4	
2	150	03	05	1979	0703	9.3	3	
2	150	03	05	1979	0710	9.3	3	
3	150	03	05	1979	0715	9.3	5	
1	150	05	31	1970	0630	9.2	4	Leak in steam chest.
1	150	05	31	1979	0718	9.2	7	Leak in steam chest.
1	150	05	31	1979	0755	9.4	15	Leak in steam chest.
5	150	06	07	1979	0124	3.9	12	Acid tank leak.
1	491	07	05	1978	1850	3.0	60	Cooler leak.
1	491	07	05	1978	1950	10.0	60	Starting at 1850 2 hours of excursions resulted from cooler leak ranging from 3 to 10; therefore time was divided equally between the two peaks.
1	491	07	20	1978	1645	0.5	45	Cooler leak.
1	491	10	11	1978	1100	4.8	10	Acid leak.
1	491	01	28	1979	0425	3.5	10	Gasket leak in coolers.
1	491	01	28	1979	0445	4.8	5	Gasket leak in coolers.
1	491	02	06	1979	0055	5.4	10	Acid vent overflow.
1	491	02	26	1979	0945	3.2	25	Acid overflow.
1	491	02	26	1979	1050	3.4	40	Acid overflow.
1	491	02	26	1979	1130	1.2	30	Acid overflow.
1	491	02	26	1979	1220	1.7	10	Acid coolers leak.
1	491	03	08	1979	1225	2.0	15	Overflow of drying Acid pump tank

TABLE 2. Continued

NCODES	Plant	Mo.	Day	Year	Time	pH	Min.	Explanation
5	495	03	15	1979	1609	4.5	10	Leak in pump tank.
1	491	04	25	1979	0712	1.6	15	A leak in the process coolers through 5:00 PM and attempts to correct low pH from this leak accounted for all excursions on 4/25.
1	491	04	25	1979	0830	2.2	10	
5	491	04	25	1979	0905	2.4	30	
1	491	04	25	1979	1545	3.0	30	
1	491	07	21	1979	2020	3.5	45	Cooler leak.
1	664	01	03	1979	1050	4.4	1	Acid leak in production being worked on and acid run over the mixed trap.
1	664	01	19	1979	2045	14.0	25	River water screen to drying tower cooler was being flushed out of existing acid, and water went to PVC sewer. Bicarbonate was added and sewer flushed.
1	664	01	19	1979	2110	0.0	5	
1	664	01	19	1979	2115	12.0	10	
1	664	01	19	1979	2125	0.0	35	
1	664	01	19	1979	2210	0.0	5	
1	664	01	19	1979	2215	14.0	1	
1	664	01	19	1979	2216	0.0	5	
1	664	01	19	1979	2221	14.0	1	
1	664	01	19	1979	2222	0.0	5	
1	664	01	19	1979	2227	14.0	1	
1	664	01	19	1979	2245	0.0	10	
1	664	01	19	1979	2300	13.0	20	
1	664	01	19	1979	2320	0.0	5	
1	664	01	19	1979	2325	14.0	10	
1	664	01	20	1979	0005	0.0	90	
1	664	05	09	1979	1210	4.3	2	Washing out tail tower and flush water overflowed curb and entered storm sewer (HF area).
1	664	05	27	1979	1400	10.6	10	Caustic spill in blower building while charging boilers and 1 quart entered drain.
1	782	12	14	1978	1900	5.9	15	Process water overflow to north surface sewer.

TABLE 2. Continued

NCODES	Plant	Mo.	Day	Year	Time	pH	Min.	Explanation
1	782	02	04	1979	2210	1.9	150	Process leak to surface sewer combined with heavy rainfall sewer overflow.
1	782	03	21	1979	1830	5.4	120	North surface line being repaired, simultaneouly leak in an acid line into NSD caused excursions; this was compounded by heavy rain.
1	782	03	22	1979	2015	2.8	40	See 3-21
1	782	03	22	1979	2130	3.0	30	See 3-21.
1	782	03	22	1979	2230	2.7	75	See 3-21
1	782	03	23	1979	0020	2.9	110	See 3-21.

Table 3. Mapping of DATA BASE II Reasons Codes (RCODES (1-12)) into DATA BASE I Reason Codes (NCODES (1-6))

DATA BASE II	DATA BASE I
1 - Process Upset	1 - Process Upset
2 - Treatment System Malfunction/ Shutdown	2 - Treatment System Upset
3 - Instruement Error	6 - Instrument Error
4 - Instrument Calibration/Maintenance	6 - Instrument Error
5 - Operation Errors (eliminated in screening of multiple reason codes)	No mapping - No RCODE = 5 for DATA BASE II
6 - Diversion in operation but pH monitor still recording. (Flow stopped or diverted, but the position of the pH probe resulted in recording pH of water that was not being discharged).	3 - Technical Excursion - Excursion record, but no flow to surface waste was recorded.
7 - Other (apparent)	6 - Instrument Error
8 - Unknown	5 - Unknown
9 - Emergency Operation	4 - Other
10 - Spills or leaks	Excursion Specific Mapping Required
11 - Rainwater	4 - Other
12 - Other (real)	4 - Other

5.2 Support of Modified pH Limitations

Having converted and integrated the two Agency data bases, excursions with reason codes 1 (process upset), 2 (treatment system upset), 4 (other), and 5 (unknown) were grouped and classifed as "real" excursions. Reason code 3 (technical excursion) and reason 6 (instrumentation error) were grouped and defined as "apparent" excursions. Technical excursions were excluded from "real" excursions because no discharge of effluent takes place because of routing of effluent to holding facilities. Instrumentation excursions were excluded because a false excursion might be registered due to calibration or maintenance reasons.

In the discussion and analysis that follows only real excursions are considered. It is the position of the Agency that apparent excursions (the result of diversion or instrumentation problems) can be controlled through proper location of the pH electrode and by maintaining well-operating instrumentation. A plant with continuous monitoring requirements has the responsibility of determining the proper location of the pH electrode so that false excursions due to diversion are avoided. Likewise a plant required to monitor pH continuously also has a responsibility to calibrate, repair, and replace its instrumentation as often as necessary to provide accurate measurement of pH.

A standard that pH be maintained within the 6-9 range at least 99 percent of the time is consistent with existing Agency policy setting effluent guidelines. Thirteen of the fourteen plants in the integrated data base meet the 6-9 categorical standard at least 99 percent of the time for aggregated months when analyzing only the "real " excursion times. That is, a plant's total number of excursion minutes for a specified number of months in monitoring when divided by the total number of monitoring minutes for those months is less than or equal to .01. Table 4 displays overall aggregated compliance percents for each of the data base plants.

Table 4. Number of Months Monitored and Aggregated Percent Monitored Compliance Time for All Real Excursions

Plant	Number of Months Monitored	Percent Monitored* Compliance Time
1306	12	99.97
2128	12	99.99
2653	12	99.47
3141	12	99.35
6662	12	99.71
8011	12	99.59
102	16	98.09
150	6	99.40
491	14	99.83
586	7	99.71
664	7	99.91
782	12	99.36
786	10	99.91
928	8	99.996

*1 - (Number of excursion minutes for number of months monitored) / (total number of minutes monitored.)

Plant 102 displays an aggregate monitored compliance of 98.09 percent. This plant had a total of 13427 minutes in excursion over a 16 month period. Four individual excursions were extremely long relative to the lengths of other real excursion times for this plant. In fact the four excursions account for approximately 80 percent of the aggregate total excursion time of 13427 minutes. The four excursions are 2 treatment system upset excursions of 1110 minutes and 2600 minutes, and 2 process system upset excursions of 3360 and 3600 minutes. These excursions are the reason for this plant's aggregate percent being less than 99 percent.

Although thirteen of fourteen plants exceeded 99 percent compliance on a aggregate level, several of the plants did not achieve 99 percent compliance on a monthly basis (i.e., non compliance 1 percent or more for a 30 day month is 432 minutes or more). As displayed in Table 4, percent compliance obtained via aggregation over a specified duration may provide overall compliance of 99 percent or better. However examination of percent compliance on a shorter basis (e.g., monthly) may reveal compliance substantially less than 99 percent. For example, consider 2 plants each being monitored for a year and each having a yearly total of 4800 minutes in excursion. Assume plant A has 400 minutes of excursions for each of twelve months. Based on 30-day months, plant A's monthly compliances exceed 99 percent (i.e., 400 minutes in excursion/43200 minutes in monitoring for a 30-day month equals .9 percent) each month. Plant A's aggregate percent also exceeds 99 percent (i.e., 4800 minutes in excursion/518400 minutes in a year of monitoring based on 30-day months equals .9 percent). Plant B, however, experienced all of its 4800 minutes in one month. Therefore, its monthly percent compliance of 89 percent (i.e., 4800 minutes in excursion/43200 minutes in monitoring for a 30-day month equals 11 percent) is considerably less than 99 percent although its aggregate percent still exceeds 99 percent compliance. Aggregation of monthly excursions times may provide a distorted picture of compliance since monthly excursion totals may considerably exceed the 1 percent allowance being proposed while the aggregate percent satisfied the 1 percent allowance.

Table 5 displays total monthly "real" excursion times for each of the plants in the integrated Agency data base. As stated earlier a monthly total excursion time of 432 minutes or more exceeds a 99 percent monthly compliance standard. Eight of the fourteen data base plants have at least one month exceeding a 99 percent monthly standard.

Plant 2653 exceeds the proposed standard in December 1977 (615 minutes) and June 1978 (615 minutes). The December excursion total is based on two process upsets; one for 195 minutes and the other for 420 minutes. The June excursion total consists of 4 process upset excursions of 240, 325, 25 and 25 minutes duration. The 325, 25, and 25 minute excursions occurred on the same day. Thus, for plant 2653 the two monthly total "real" excursion times are all the result of process upsets.

For plant 3141 the December 1977 total (1079 minutes), the January (1483 minutes) and February (515 minutes) 1978 monthly total "real" excursion times exceed the proposed standard of 432 minutes. The December total consists of 17 real excursions of unknown reason ranging from 2 minutes to 720 minutes in duration. The January total of 1483 minutes is based on 43 excursions (2 process upsets

(5, 10 minutes), 6 treatment system upsets ranging 5 to 15 minutes, and 35 unknown reason excursions ranging from 2 to 330 minutes). The February total of 515 minutes is based on 30 excursions (3 treatment system upsets (30, 35, 40 minutes) and 27 unknown excursion ranging from 3 to 80 minutes). For each of the months unknown reason excursions accounted for almost all of the monthly total excursion time.

For plant 6662 the November 1978 monthly "real" total of 690 minutes consists of 4 treatment system upset excursions of 266, 204, 208, and 12 minutes for a 2 day period.

Plant 8011's monthly real excursion total for January 1978 was 2075 minutes. This monthly total consisted of 4 real "other" excursions of durations 70, 60, 45, and 1900 minutes.

Plant 102's monthly "real" excursion totals exceed the proposed 99 percent standards in April (3600 minutes), September (4470 minutes), and November 1978 (540 minutes), and in March (585 minutes), June (2823 minutes) and July (849 minutes) of 1979. The April total is based on one process upset of 3600 minutes. The September total consists of a process upset excursion of 3360 minutes and a treatment system upset of 1110 minutes. The November total is based on a single process upset excursion. The March excursion total is the sum of a 285 minute process upset and a 300 minute "other" real excursion. The June total is made up of seven treatment system upsets ranging in durations from 1 to 2600 minutes. The July total of 849 minutes is the sum of twelve treatment system upsets ranging in duration for one to 150 minutes in excursion. All of these excursions occurred in the early part of July.

Plant 150 exceeded the 99% monthly compliance specification in March (507 minutes) and June (614 minutes) 1979. The March total of 507 minutes is based on 66 "real" excursions, 7 of which were associated with process upsets ranging from 2 to 28 minutes, 46 with treatment system upsets ranging from 2 to 106 minutes, 3 with "other" real excursions of 2, 2, and 7 minutes and 10 with unknown reason excursions ranging from 1 to 120 minutes. The major reason contributing to the March total was the treatment system upsets. The June total of 614 minutes is based on 6 process upsets, 13 treatment system upsets, and 7 unknown reason excursions. The unknown excursions ranged from 3 to 210 minutes, the treatment system excursions ranged from 1 to 58 minutes, and the process upsets ranged from 8 to 57 minutes in duration.

Plant 586 experienced only 2 "real" excursions during the seven months of monitoring data provided. The two "real" excursions were of unknown reason and were of 660 and 240 minutes in duration.

Plant 782 in March 1979 has a total monthly "real" excursion time of 2060 minutes. The "real" total excursion time is based on 5 process system excursions ranging from 30 to 120 minutes, 5 treatment system upsets of 20 to 990 minutes, 2 "other" excursion of 25 and 120 minutes, and 1 unknown excursion of 15 minutes.

Table 5. Total Monthly Excursion Time By Plant For Real Excursions

AGENCY DATA BASE I

Plants:	1306	2128	2653	3141	6662	8011
DEC 1977	0	0	615	1079	247	0
JAN 1978	0	0	370	1483	142	2075
FEB	0	0	120	515	0	40
MAR	0	0	180	192	0	45
APR	120	49	240	13	0	5
MAY	0	0	125	72	293	3
JUN	0	0	615	24	0	0
JUL	0	0	0	3	0	0
AUG	0	0	120	0	0	0
SEPT	0	0	305	12	129	0
OCT	2	0	0	20	0	0
NOV	10	0	120	5	690	0

AGENCY DATA BASE II

Plants:	102	150	491	586	664	782	786	928
APR 1978	3600							
MAY	0							
JUN	0		0					
JUL	0		165					
AUG	85		5			135		
SEPT	4470		2			110		
OCT	0		30			90	0	
NOV	540		0			0	277	
DEC	0		180	0		29	75	
JAN 1979	390	28	80	0	238	135	10	0
FEB	85	127	165	0	2	165	15	0
MAR	585	507	85	900	0	2060	0	0
APR	0	155	245	0	0	145	0	0
MAY	0	127	0	0	12	130	0	0
JUN	2823	614	30	0	0	170	0	0
JUL	849		45		14	220	0	15
AUG								0

Of the total 152 months monitored, seventeen (11%) failed to satisfy a 99% monthly compliance specification and 8 (5%) months would have also failed to satisfy a 98% monthly compliance. Slightly less than half of the plants in the data base (6 out of 14) achieved compliance at least 99% of the time for each of its months.

The following table classifies each plant's monthly totals of "real" excursion time with respect to various intervals of monthly excursion percents. For example of plant 1306's twelve monthly "real" excursion totals nine months had excursion percent of zero (i.e. nine months of no "real" excursion time) and three monthly excursion totals under 1% of a 30 day month (i.e. 3 monthly "real" totals under 432 minutes). Clearly within each data base 99 percent compliance or greater is attainable. Within Data Base I, sixty-five of the seventy-two months (90%) have monthly excursion totals under 432 minutes. Similarly in Data Base II, approximately 90% of the months have an excursion percent of one percent or less.

Table 6

Number of Months With(in) The Specified Monthly "Real" Excursion Percent Interval

Data Base I Plants	# Months Monitored	0%	0%<x≤1% (1-432 minutes	1%<x≤2% (433-864 minutes)	2%<x≤3% (865-1296 minutes)	3%<x≤4% (1297-1728 minutes)	4%<x≤5% (1729-2160 minutes)	>5% (2161-minutes or more)
1306	12	9	3					
2128	12	11	1					
2653	12	2	8	2				
3141	12	1	8	1	1	1		
6662	12	7	4	1				
8011	12	7	4				1	
	72	37	28	4	1	1	1	

Data Base II Plants	# Months Monitored	0%	0%<x≤1% (1-432 minutes	1%<x≤2% (433-864 minutes)	2%<x≤3% (865-1296 minutes)	3%<x≤4% (1297-1728 minutes)	4%<x≤5% (1729-2160 minutes)	>5% (2161 minutes or more)
102	16	7	3	3				3
150	6		4	2				
491	14	3	11					
586	7	6			1			
664	7	3	4					
782	12	1	10				1	
786	10	6	4					
928	8	7	1					
	80	33	37	5	1		1	3

Support of Agency policy requiring compliance at least 99% of the time has been documented in an earlier Agency position paper titled, pH Under Continuous Monitoring. This work utilized all excursions in DATA BASE I except those classified as technical excursions (Reason Code 3). Plant specific data was used for conducting a simulation study to obtain 99th percentile estimates of total monthly excursion times for each plant. The median of the associated 99th percentile monthly estimates of the six plants in DATA BASE I was found to be 389 minutes per month in excursion. When previous effluent guidelines have been based on the performance at several plants, the median across plants has often been used as a basis for a standard. Following this method, a standard which allows one percent of a month (i.e., 432 minutes) in excursion is approximately the same as the median of 389 minutes of plant specific 99th percentile monthly estimates.

In pH Control of Industrial Effluents, an industry supported document, 99 percent monthly compliance was concluded to be a reasonable and attainable standard for plants required to monitor pH continuously. In another industry supported study, Analysis of Data Collected for EPA By JRB Associates Relating to the Establishment of National pH Limitations, a monthly compliance standard of 98.57 percent was recommended as a result of the analyses performed. Thus, Agency and industry studies support ninety-nine percent monthly compliance as a reasonable and attainable standard.

In addition to a monthly compliance standard of 99 percent the Agency intends to limit the duration of any single excursion, regardless of its pH value, to 30 minutes. By reason of the proposed 99 percent monthly compliance standard the Agency acknowledges that excursions in the course of plant operations do occur. However the Agency intends to limit excessive individual excursion durations which indicate serious operational problems not rectified immediately. For example, a plant might exhibit a single excursion of 420 minutes in a given month. This plant would satisfy the proposed monthly compliance standard; however, a single 420 minute excursion would certainly be indicative of serious plant malfunction not corrected in a short period of time. Therefore the Agency has determined that excursions of excessive duration should be avoided. In conjunction with 99 percent monthly compliance the Agency position is that any individual excursion shall not exceed 30 minutes. The thirty minute limitation may be shortened by permit writers when local water quality conditions require a more stringent limitation. Table 7 displays the number of real excursions on a plant-specific basis that exceed 15, 30 and 60 minutes duration. In each of the Agency data bases approximately 25 percent of the "real" excursions exceeded 30 minutes in duration.

Table 7

Comparison of Number of "Real" Excursions Exceeding Fifteen (15), Thirty (30) and Sixty (60) Minutes Duration With Respect to Plant and Data Base

DATA BASE I Plants	Total Number of Excursions	Number of Excursions > 15 Minutes	Number of Excursions > 30 Minutes	Number of Excursions > 60 Minutes
1306	6	3	2	0
2128	2	1	1	0
2653	21	18	15	15
3141	136	33	16	11
6662	13	9	8	8
8011	13	6	4	2
	191	70	46	36
DATA BASE II Plants				
102	28	22	21	18
150	135	19	11	2
491	39	19	9	2
586	2	2	2	2
664	26	4	2	1
782	38	24	20	19
786	7	3	3	2
928	2	0	0	0
	277	93	68	46
DATA BASE I and II				
	468	163	114	82

The following table summarizes the earlier tables with respect to 99% monthly compliance violations and 30 minutes excursion duration violations. Total violations is the sum of 99% monthly compliance violations and the 30 minute duration violations on a plant specific basis. For all but plant 928, the number of duration violations exceeded the number of monthly compliance violations. This table illustrates the need to restrict individual excursion lengths in addition to requiring 99 percent monthly compliance. For example plant 782 exhibits only 1 monthly compliance violation for the twelve months of monitoring data provided. However over half of its real excursions (20 out of 38) exceeded 30 minutes. Similar situations occur for plants 2653 and 6662.

Table 8

Plant Month and Duration Violations
for Real Excursions

# Months Monitored		# Plant Month Violations For Monthly Compliance Specifications ≥99%	# Real Excursions	# Duration Violations > 30 Minutes	Total Violations
DATA BASE I					
1306	12	0	6	2	2
2128	12	0	2	1	1
2653	12	2	21	15	17
3141	12	3	136	16	19
6662	12	1	13	8	9
8011	12	1	13	4	5
	72	7	191	46	53
DATA BASE II					
102	16	6	28	21	27
150	6	2	135	11	13
491	14	0	39	9	9
586	7	1	2	2	3
664	7	0	26	2	2
782	12	1	38	20	21
786	10	0	7	3	3
928	8	0	2	0	0
	80	10	277	68	78
	152	17	468	114	131

5.3 Expected Value and Variance of Total Monthly Excursion Time

This section presents another approach to assess plant specific behavior with respect to the 99 percent monthly compliance limitation. Total monthly excursion times (M) may be formulated as a random variable obtained by summing a random number of individual random excursion times within a month. By conditioning on the number of excursions within a month the expected value E(M) and variance V(M) of the total monthly excursion time may be obtained.

Let M = total monthly excursion time obtained by summing N excursion times occurring within a month.

N = total number of excursions within a month

T_i = i th individual excursion time occurring within a month

Total monthly excursion time obtained from N excursions in a month may then be expressed as

$$M = T_1 + T_2 + \ldots + T_N = \sum_{j=1}^{N} T_j$$

where N and the T_j's are random variables.

Assume the individual excursion times are independent and identically distributed with mean μ_T and variance σ^2_T. Also assume the number of monthly excursions are independent and identically distributed with mean μ_N and variance σ^2_N.

The following relationships hold for the expected value and variance of the random variable total monthly excursion time (M) when conditioned on the number of excursions (N) within a month.

$$\begin{aligned} E(M) &= E\,(E\,(M|N)) \\ &= E\,(E\,(T_1+\ldots+T_N) \\ &= E\,(N\ \mu_T) \\ &= \mu_N\ \mu_T \end{aligned}$$

$$\begin{aligned} V(M) &= V(E(M|N)) + E(V(M|N)) \\ &= V(E(T_1+\ldots+T_N)) + E(V(T_1+\ldots+T_N)) \\ &= V\,(N\ \mu_T) + E\,(N\ \sigma^2_T) \\ &= \mu^2_T\ V(N) + \sigma^2_T\ E\,(N) \\ &= \mu^2_T\ \sigma^2_N + \sigma^2_T\ \mu_N \end{aligned}$$

Thus by estimating the mean and variance of the individual excursion times within months, and the mean and variance of the number of excursions within months, estimates of the expected value and variance of total monthly excursion time may be obtained.

Table 9 displays plant specific estimates of the expected value, E(M), and standard deviation, $V(M)^{1/2}$, of total monthly "real" excursion time. $\overline{X}_N$ and S_N^2 represent the arithmetic mean and variance of the number of "real" excursions experienced each month. $\overline{X}_N$ and S_N^2 are estimators of μ_N and σ_N^2. $\overline{X}_T$ and S_T^2 are the arithmetic mean and variance of the duration lengths for the "real" excursions which contribute to total monthly "real" excursion time. Each month with no "real" excursion time contributes an excursion time of zero to the estimators $\overline{X}_T$ and S_T^2. $\overline{X}_T$ and S_T^2 are used to estimate μ_T and σ_T^2. By substituting the estimators for μ_N, σ_N^2, μ_T, and σ_T^2 into the appropriate expression, estimates of E(M) and V(M) are obtained. Estimates of E(M) and V(M) are identified in the following table as $\overline{X}$ and S_M^2.

Table 9. Plant Specific Estimates of Number Of "Real" Excursions Within Each Month, Duration Length In Minutes Of "Real" Excursions Within Each Month, and Total Monthly "Real" Excursion Time In Minutes

Plant	N_m*	$\overline{X}_N$	S^2_N	N_t**	$\overline{X}_T$	S^2_T	$\overline{M}$	$(S^2_M)^{1/2}$
1306	12	.5	1	15	8.8	324.31	4.4	15.48
2128	12	.17	.33	13	3.77	106.69	.64	4.78
2653	12	1.75	2.39	23	122.17	12249.61	213.80	238.97
3141	12	11.33	217.70	137	24.95	5369.30	282.68	443.12
6662	12	1.08	2.63	20	75.05	9938.58	81.05	159.83
8011	12	1.08	2.45	20	108.4	178258.88	117.07	470.43
102	16	1.75	10.47	35	383.63	818642.18	671.35	1724.39
150	6	22.5	517.9	135	11.54	485.89	259.65	282.67
491	14	2.79	9.87	42	24.57	971.86	68.55	93.11
586	7	.29	.57	8	112.5	55992.86	32.63	153.14
664	7	3.71	52.90	29	9.17	306.72	34.02	74.74
782	12	3.17	11.24	39	86.90	26039.15	275.47	409.18
786	10	.7	1.57	13	29	3562.17	20.3	61.76
928	8	.25	.5	9	1.67	12.5	.42	2.13

*N_m = number of months monitored

**N_t = total number of excursions with length greater than or equal to zero minutes for the specified number of months monitored. Months with zero excursions contribute a single excursion of length zero for each month.

For each plant, the following table displays the number of estimated standard deviations of M (S_M) which when added to the estimated mean ($\overline{M}$) would equal the proposed limitation of 432 minutes.

Plant	$(432 - \overline{M})/S_M$
1306	27.6
2128	90.2
2653	.9
3141	.3
6662	2.2
8011	.7
102	-.1
150	.6
491	3.9
586	2.6
664	5.3
782	.4
786	6.7
928	202.6

At a minimum, the plants with factors above 3 show that the monthly limitation of 432 minutes is attainable. The plants with factors greater than 3 exhibit no monthly violations of the proposed 99% monthly limitation. Where previous effluent guidelines have been based on plant performance, the median across plants has generally been used as a basis for a standard. Thus half of the plants would fall below the limitations and half would be above. From the above table approximately half of the plants are in compliance with the proposed standard.

5.4 Nonparametric Analysis of Number of Monthly Violations

Since plant specific probability distributions of total monthly excursion times are unknown, the means and variances presented in the previous section cannot be translated directly into estimates of the probability that a plant will exceed the standard for a given month. As an alternative approach, the following nonparametric formulation is presented.

Let $X_1, X_2, .., X_n$ be a random sample from a Bernoulli distribution, where:

$X_i = 1$ if a plant's ith monthly total excursion time exceeds the monthly excursion standard;

$X_i = 0$ if a plant's ith monthly total excursion time does not exceed the monthly excursion standard.

n = number of months monitored for a specific plant.
For a Bernoulli distribution, $P[X = 1] = \theta = 1 - P[X = 0]$

Specifically with respect to the proposed total monthly excursion standard the probability of exceeding the monthly excursion standard is hypothesized to be .01 (i.e., $\theta = .01$).

Furthermore, $S = \sum_{i=1}^{n} X_i$ = a plant's total number of months exceeding the monthly excursion standard.

A plant's total number of months exceeding the monthly excursion standard (S) has a binomial distribution such that

$$P[S = s] = \binom{n}{s} \theta^{s} (1 - \theta)^{n-s} \text{ where } s = 0, 1, \ldots, n.$$

For a fixed n and S = s, a 100 $(1-\alpha)$ percent confidence interval for θ can be obtained. The confidence interval estimate for θ can be constructed such that the interval satisfies a certain desirable criterion (uniformly most accurate) and maintains the confidence level of $100(1-\alpha)$ percent (see Testing Statistical Hypotheses by Lehmann, Sections 3.5, 5.4, 5.5).

Various methodologic references have solved the above equations. (See Introduction to Statistical Analysis by Dixon and Massey and Experimental Statistics by M.G. Natrella).

Therefore, for fixed values of n and s, a 100 $(1-\alpha)$ percent confidence interval can be constructed for θ. The confidence interval can be used to test the hypothesis $\theta = \theta_0$, (i.e., θ = some specified value) with level of significance α. If the specified value θ_0 is contained in the confidence interval then the hypothesis is accepted; if θ_0 is not within the confidence interval then the hypothesis is rejected.

The following table displays plant specific values of n and s and corresponding 90 percent confidence intervals for $\theta = P[X = 1]$ = probability the monthly excursion total exceeds the standard. Plant specific 90% confidence limits on θ for the specified n and s were obtained using Table A-22 from Experimental Statistics referenced above.

Plant	n # Months Monitored	s # of Months Standard is Exceeded	90% Confidence Interval
1306	12	0	0 - .184
2128	12	0	0 - .184
2653	12	2	.045 - .398
3141	12	3	.096 - .500
6662	12	1	.009 - .294
8011	12	1	.009 - .294
102	16	6	.189 - .619
150	6	2	.093 - .667
491	14	0	0 - .163
586	7	1	.015 - .500
664	7	0	0 - .316
782	12	1	.009 - .294
786	10	0	0 - .222
928	8	0	0 - .255

Because confidence intervals can be used to perform hypothesis tests, the hypothesis $\theta = P(X = 1) = .01$ can be tested using the preceding confidence intervals.

The hypothesis $\theta = P(X = 1) = .01$ is rejected for plants 2653, 3141, 102, 150 and 586. Thus, 9 of the 14 plants fail to reject the hypothesis that the probability of exceeding the monthly excursion standard is .01. For plants 2653, 3141, 102, and 586 almost all of the monthly totals exceeding the standard are due to one or two excursions of considerable duration. For example, plant 102 had an April 1978 monthly excursion total of 3600 minutes. This monthly total is based on a single process system upset. Such monthly excursion totals might be waived if the permittee satisfied requirements specified under the upset provision of the consolidated permit regulations. If the 9 plants that failed to reject the hypothesis of $\theta = P[X = 1] = .01$ are pooled, then for the aggregate 99 plant months, the monthly excursion total standard is expected to be exceeded once every 8 or 9 years.

6. AGENCY RESPONSE AND POSITION ON TECHNICAL CONCLUSIONS SUBMITTED IN SUPPORT OF 1978 PETITION

Technical background and legal precedents are presented in the original petition ("pH Effluent Limitations Guidelines and Standards of Performance for Certain Manufacturing Point Source Categories, pp. 13-23). The Agency has reviewed these conclusions and the submitted supporting evidence in conjunction with the Agency's data bases and other related information. The results of EPA's assessment of major issues raised by the petitioners is summarized below.

Whenever implemented in connection with conventional discrete monitoring measurement methods, the categorical pH standards, generally the pH range 6 to 9, should be retained as the effluent guideline BPT standards. In the development of effluent standards in general, the Agency has and continues to recognize that there is no standard that never will be exceeded; therefore, statistical variations of wastewater characteristics are taken into account in derivation of guidelines. Consequently, evidence demonstrating that a standard is attained for all but a very small percentage of time by appropriate wastewater treatment systems is not adequate justification alone to adjust effluent standards when implemented together with compliance measurement methods for which the standards were developed. The Agency does recognize, however, that if a standard is applied along with a requirement for a radically different measurement method for compliance monitoring then such a requirement may dictate an adjustment of the original standard. Consequently, the Agency has concluded that satisfaction of pH standards whenever final effluent pH is required to be measured continuously may be beyond the capabilities of BPT and BCT systems. Standards for pH should be reformulated.

The EPA independently has verified the petitioners assessment that on an annual, aggregate basis plants do achieve present categorical pH standards in excess of 99% of the time. These findings support the Agency position on the original standards applied with discrete monitoring.

The Agency concurs with the petitioners that BPT plants with continuous monitoring can attain categorical pH standards 99% of the time on a monthly basis. Again, there is recognition in the month-to-month variation in compliance times for any given plant. If a plant is in compliance at least 99% of the time on an annual basis, it does not follow that the same plant satisfies the standards at least 99% of the time for most months. But for those noncompliance months, plants experience operational problems repeatedly or for extended periods of time. Such problems include those arising from the industrial process itself, functioning of the wastewater treatment system, and monitoring instrumentation. As for malfunctions of the monitoring instrumentation, the Agency maintains that a permit requirement for continuous monitoring dictates that adequate instrumentation be installed and that it be calibrated and serviced routinely. Furthermore, should a malfunction occur, it should be identified and rectified in a timely fashion. Agency data suggest that such maintenance practices are not followed at some plants. For instance, the Agency data base for plant 586 spans a period of seven months of operation. The pH strip charts showed 12 occurrences of violations of the plant pH standard. As for the duration of

the 12 violations, each of the 4 longest was in excess of 20 hours, and seven of the remaining 8 were less than half as long. Everyone of the 4 largest was due to malfunction of monitoring instrumentation. The performance of monitoring instrumentation at this plant relative to other data base plants certainly raises questions as to whether the plant was meeting the continuous monitoring requirement. Although this case may be an extreme illustration, instrumentation malfunctions are not a factor in modifying pH standards to incorporate continuous monitoring requirements.

Following the general formulation for effluent guideline standards, there are a monthly and a daily standard for each regulated parameter. In this regard, the petitioners have suggested in various communications a daily standard formulated as follows: pH is not to be outside the range 3.5 to 11 for a continuous period of more than 15 minutes, and pH is not to be outside the categorical range for more than 15% of the time on a daily basis, which translates to 3 hours and 36 minutes. The Agency rejects the concept of a multi-faceted pH standard for continuous monitoring. The pH range of 6 to 9 is a traditional range applied in the practice of wastewater treatment engineering; whereas, the range 3.5 to 11 appears to be arbitrary. Furthermore, having two such ranges would be somewhat inconsistent and would result in a cumbersome guideline. The Agency also rejects the 15% daily basis because a daily period of 3 hours and 36 minutes is excessive relative to a monthly noncompliance time of 7 hours and 12 minutes and relative to time required to rectify the potential causes of excursions. (The petition suggests (p. 22) that most plants can shut down in approximately 15 minutes.) More importantly, however, acceptance of this rule would be contrary to the Agency position that the categorical standards are achievable with discrete monitoring.

Together with the 99% monthly compliance time, the Agency recommends that a plant is not to be outside the categorical pH range continuously for a period of more than 30 minutes. An analysis of this rule is presented in section 5.2 of this document.

REFERENCES

1. Ayres, G.H., Quantitative Chemical Analysis, Harper and Row, New York, (1968).

2. Barrow, G.M., Physical Chemistry, McGraw-Hill Book Compancy, New York, (1966).

3. Moore, R.L., Neutralization of Waste Water by pH Control, Instrument Society of America, Pittsburgh, Pennsylvania, (1978).

4. Shinskey, F.G., pH and pION Control of Process and Waste Streams, John Wiley and Sons, New York, (1973).

5. "An Assessment of pH Control of Process Waters in Selected Plants", Prepared by JRB Associates, Inc., McLean, Virginia, for EPA, Contract No. 69-01-3881, Task No. 13, (March, 1979).

6. "pH Control of Industrial Waste Waters in the Inorganic Chemicals Industry", Prepared by Jacobs Engineering Groups, Inc., Pasadena, California, for EPA Contract No. 68-01-5167, Work Order No. 5, (October, 1979).

7. Cleary, Gottlieb, et. al., Petition to EPA re: "pH Effluent: Limitations Guidelines and Standards of Performance for Certain Manufacturing Point Source Categories", Washington, D.C. (August 3, 1978).

8. "pH Control of Industrial Effluent", Prepared by Centec Consultants, Inc., Reston, Virginia, for Cleary, Gottlieb, Steen and Hamilton, (June, 1978).

9. "Analysis of Data Collected for EPA by JRB Assiciates Relating to the Establishment of National pH Limitations Guidelines", Prepared by Centec Corproation, Reston, Virginia for Cleary, Gottlieb, Steen and Hamilton, (July 1979).

10. "pH Under Continuous Monitoring", Agency position paper.

11. "Statistical and Documentation Support for pH Regulation Development", Prepared by JRB Associates, Inc., McLean, Virginia, for EPA, Contract No. 68-01-6048, Task No. 1, (July 1980).

12. Natrella, M.G., Experimental Statistics, NBS Handbook 91, U.S. Government Printing Office, Washington, D.C. 20402 (1966).

13. Lehmann, E.L., Testing Statistical Hypotheses, John Wiley and Sons, Inc., New York (1959).

ACKNOWLEDGEMENTS

This document was prepared by the Environmental Protection Agency utilizing the technical and research services of JRB Associates, Inc. of McLean, Virginia (Contract No. 68-01-6048). Dr. Paul Cumming was the JRB project director. The JRB project manager was Mr. Joseph Ney. Key JRB staff members contributing to the project were Mr. Carl Uhrumacher, Mr. Paul Campanella, Mr. Rajarshi Ganguli, and Dr. Charles Norwood.

The latter phases of the study including the preparation of the document were directed by Dr. Russell Roegner, EPA Project Officer. The work was supervised by Dr. Maurice E.B. Owens, Acting Branch Chief for Program Integration and Evaluation. Initial technical and critical contributions were made by Mr. Gary L. Liberson. Mr. Ray Redd performed important interim data analyses.

The project officer wishes to acknowledge the assistance of the following personnel at EPA for their contributions in the development of the regulation and the supporting materials. Appreciation is extended to Mr. Richard Gardner of the Office of General Counsel for his contributions in formulating and writing the regulation and the preamble. Steven Schatzow, now Deputy Assistant Administrator for Water Regulations and Standards, also contributed to the formulation of the regulation as a member of the Office of General Counsel. Mr. Charles Gregg of the Office of Regulations Review participated actively in the review and formulation of the regulation and supporting materials, as did Mr. Gary Polvi of the Office of Water Enforcement. From the Effluent Guidelines Division Dr. James Gallup reviewed and commented on the regulation at various stages of its development.

Additionally the project officer wishes to express his appreciation for comments received from regional offices.

The project officer also wishes to thank Ms. Tricia Mercer of the Office of Analysis and Evaluation for her efforts in the typing of drafts, necessary revisions, and for the final preparation of the regulation, preamble, and supporting materials.

TABLE CLASS 5A (MODIFIED)
FREQUENCY/PERCENT DISTRIBUTION OF EXCURSION TIMES
FOR REAL REASON CODES BY PLANT
PLANT#102

DURATION	FREQUENCY	CUM FREQ	PERCENT	CUM PERCENT
1	2	2	7.143	7.143
2	1	3	3.571	10.714
3	1	4	3.571	14.286
5	1	5	3.571	17.857
10	1	6	3.571	21.429
20	1	7	3.571	25.000
40	1	8	3.571	28.571
45	2	10	7.143	35.714
75	2	12	7.143	42.857
85	2	14	7.143	50.000
90	1	15	3.571	53.571
120	3	18	10.714	64.286
150	2	20	7.143	71.429
285	1	21	3.571	75.000
300	1	22	3.571	78.571
390	1	23	3.571	82.143
540	1	24	3.571	85.714
1110	1	25	3.571	89.286
2600	1	26	3.571	92.857
3360	1	27	3.571	96.429
3600	1	28	3.571	100.000

TABLE CLASS 5A (MODIFIED)
FREQUENCY/PERCENT DISTRIBUTION OF EXCURSION TIMES
FOR REAL REASON CODES BY PLANT
PLANT#150

DURATION	FREQUENCY	CUM FREQ	PERCENT	CUM PERCENT
1	8	8	5.926	5.926
2	14	22	10.370	16.296
3	32	54	23.704	40.000
4	9	63	6.667	46.667
5	11	74	8.148	54.815
6	3	77	2.222	57.037
7	4	81	2.963	60.000
8	3	84	2.222	62.222
9	3	87	2.222	64.444
10	8	95	5.926	70.370
11	4	99	2.963	73.333
12	6	105	4.444	77.778
13	4	109	2.963	80.741
14	1	110	0.741	81.481
15	6	116	4.444	85.926
16	1	117	0.741	86.667
17	1	118	0.741	87.407
19	1	119	0.741	88.148
22	1	120	0.741	88.889
24	1	121	0.741	89.630
25	1	122	0.741	90.370
27	1	123	0.741	91.111
28	1	124	0.741	91.852
32	1	125	0.741	92.593
35	1	126	0.741	93.333
37	1	127	0.741	94.074
39	1	128	0.741	94.815
40	1	129	0.741	95.556
47	2	131	1.481	97.037
57	1	132	0.741	97.778
58	1	133	0.741	98.519
106	1	134	0.741	99.259
210	1	135	0.741	100.000

TABLE CLASS 5A (MODIFIED)
FREQUENCY/PERCENT DISTRIBUTION OF EXCURSION TIMES
FOR REAL REASON CODES BY PLANT
PLANT=491

DURATION	FREQUENCY	CUM FREQ	PERCENT	CUM PERCENT
2	1	1	2.564	2.564
5	7	8	17.949	20.513
10	8	16	20.513	41.026
15	4	20	10.256	51.282
20	4	24	10.256	61.538
25	1	25	2.564	64.103
30	5	30	12.821	76.923
35	1	31	2.564	79.487
40	1	32	2.564	82.051
45	3	35	7.692	89.744
60	2	37	5.128	94.872
90	1	38	2.564	97.436
180	1	39	2.564	100.000

TABLE CLASS 5A (MODIFIED)
FREQUENCY/PERCENT DISTRIBUTION OF EXCURSION TIMES
FOR REAL REASON CODES BY PLANT
PLANT=586

DURATION	FREQUENCY	CUM FREQ	PERCENT	CUM PERCENT
240	1	1	50.000	50.000
660	1	2	50.000	100.000

TABLE CLASS 5A (MODIFIED)
FREQUENCY/PERCENT DISTRIBUTION OF EXCURSION TIMES
FOR REAL REASON CODES BY PLANT
PLANT#664

DURATION	FREQUENCY	CUM FREQ	PERCENT	CUM PERCENT
1	7	7	26.923	26.923
2	3	10	11.538	38.462
3	1	11	3.846	42.308
5	6	17	23.077	65.385
10	5	22	19.231	84.615
20	1	23	3.846	88.462
25	1	24	3.846	92.308
35	1	25	3.846	96.154
90	1	26	3.846	100.000

TABLE CLASS 5A (MODIFIED)
FREQUENCY/PERCENT DISTRIBUTION OF EXCURSION TIMES
FOR REAL REASON CODES BY PLANT
PLANT#782

DURATION	FREQUENCY	CUM FREQ	PERCENT	CUM PERCENT
2	2	2	5.263	5.263
5	5	7	13.158	18.421
15	7	14	18.421	36.842
20	1	15	2.632	39.474
25	2	17	5.263	44.737
30	1	18	2.632	47.368
40	1	19	2.632	50.000
70	1	20	2.632	52.632
75	4	24	10.526	63.158
80	1	25	2.632	65.789
90	1	26	2.632	68.421
95	2	28	5.263	73.684
110	1	29	2.632	76.316
120	2	31	5.263	81.579
125	1	32	2.632	84.211
130	1	33	2.632	86.842
150	1	34	2.632	89.474
165	1	35	2.632	92.105
205	1	36	2.632	94.737
270	1	37	2.632	97.368
990	1	38	2.632	100.000

TABLE CLASS 5A (MODIFIED)
FREQUENCY/PERCENT DISTRIBUTION OF EXCURSION TIMES
FOR REAL REASON CODES BY PLANT
PLANT=786

DURATION	FREQUENCY	CUM FREQ	PERCENT	CUM PERCENT
2	1	1	14.286	14.286
5	1	2	14.286	28.571
10	1	3	14.286	42.857
15	1	4	14.286	57.143
60	1	5	14.286	71.429
75	1	6	14.286	85.714
210	1	7	14.286	100.000

TABLE CLASS 5A (MODIFIED)
FREQUENCY/PERCENT DISTRIBUTION OF EXCURSION TIMES
FOR REAL REASON CODES BY PLANT
PLANT#928

DURATION	FREQUENCY	CUM FREQ	PERCENT	CUM PERCENT
5	1	1	50.000	50.000
10	1	2	50.000	100.000

TABLE CLASS 5A (MODIFIED)
FREQUENCY/PERCENT DISTRIBUTION OF EXCURSION TIMES
FOR REAL REASON CODES BY PLANT
PLANT=1306

DURATION	FREQUENCY	CUM FREQ	PERCENT	CUM PERCENT
1	2	2	33.333	33.333
10	1	3	16.667	50.000
20	1	4	16.667	66.667
40	1	5	16.667	83.333
60	1	6	16.667	100.000

TABLE CLASS 5A (MODIFIED)
FREQUENCY/PERCENT DISTRIBUTION OF EXCURSION TIMES
FOR REAL REASON CODES BY PLANT
PLANT=2128

DURATION	FREQUENCY	CUM FREQ	PERCENT	CUM PERCENT
13	1	1	50.000	50.000
36	1	2	50.000	100.000

TABLE CLASS 5A (MODIFIED)
FREQUENCY/PERCENT DISTRIBUTION OF EXCURSION TIMES
FOR REAL REASON CODES BY PLANT
PLANT=2653

DURATION	FREQUENCY	CUM FREQ	PERCENT	CUM PERCENT
10	1	1	4.762	4.762
15	2	3	9.524	14.286
20	1	4	4.762	19.048
25	2	6	9.524	28.571
90	2	8	9.524	38.095
105	1	9	4.762	42.857
120	3	12	14.286	57.143
125	1	13	4.762	61.905
140	1	14	4.762	66.667
160	1	15	4.762	71.429
195	1	16	4.762	76.190
210	1	17	4.762	80.952
240	2	19	9.524	90.476
325	1	20	4.762	95.238
420	1	21	4.762	100.000

TABLE CLASS 5A (MODIFIED)
FREQUENCY/PERCENT DISTRIBUTION OF EXCURSION TIMES
FOR REAL REASON CODES BY PLANT
PLANT#3141

DURATION	FREQUENCY	CUM FREQ	PERCENT	CUM PERCENT
2	7	7	5.147	5.147
3	24	31	17.647	22.794
5	27	58	19.853	42.647
6	1	59	0.735	43.382
7	13	72	9.559	52.941
8	3	75	2.206	55.147
10	14	89	10.294	65.441
13	2	91	1.471	66.912
15	12	103	8.824	75.735
20	3	106	2.206	77.941
21	2	108	1.471	79.412
22	3	111	2.206	81.618
25	1	112	0.735	82.353
30	8	120	5.882	88.235
35	2	122	1.471	89.706
37	1	123	0.735	90.441
40	1	124	0.735	91.176
50	1	125	0.735	91.912
70	2	127	1.471	93.382
75	2	129	1.471	94.853
80	1	130	0.735	95.588
95	1	131	0.735	96.324
105	1	132	0.735	97.059
240	2	134	1.471	98.529
330	1	135	0.735	99.265
720	1	136	0.735	100.000

TABLE CLASS 5A (MODIFIED)
FREQUENCY/PERCENT DISTRIBUTION OF EXCURSION TIMES
FOR REAL REASON CODES BY PLANT
PLANT=6662

DURATION	FREQUENCY	CUM FREQ	PERCENT	CUM PERCENT
10	1	1	7.692	7.692
12	2	3	15.385	23.077
14	1	4	7.692	30.769
20	1	5	7.692	38.462
65	1	6	7.692	46.154
95	1	7	7.692	53.846
142	1	8	7.692	61.538
160	1	9	7.692	69.231
204	1	10	7.692	76.923
208	1	11	7.692	84.615
266	1	12	7.692	92.308
293	1	13	7.692	100.000

TABLE CLASS 5A (MODIFIED)
FREQUENCY/PERCENT DISTRIBUTION OF EXCURSION TIMES
FOR REAL REASON CODES BY PLANT
PLANT=8011

DURATION	FREQUENCY	CUM FREQ	PERCENT	CUM PERCENT
1	1	1	7.692	7.692
2	1	2	7.692	15.385
5	2	4	15.385	30.769
10	1	5	7.692	38.462
15	2	7	15.385	53.846
20	2	9	15.385	69.231
45	1	10	7.692	76.923
60	1	11	7.692	84.615
70	1	12	7.692	92.308
1900	1	13	7.692	100.000

TABLE CLASS 5A (MODIFIED)
FREQUENCY/PERCENT DISTRIBUTION OF EXCURSION TIMES
FOR APPARANT REASON CODES BY PLANT
PLANT=150

DURATION	FREQUENCY	CUM FREQ	PERCENT	CUM PERCENT
1	2	2	15.385	15.385
2	1	3	7.692	23.077
3	1	4	7.692	30.769
4	1	5	7.692	38.462
5	1	6	7.692	46.154
7	1	7	7.692	53.846
15	1	8	7.692	61.538
20	1	9	7.692	69.231
21	1	10	7.692	76.923
42	1	11	7.692	84.615
45	1	12	7.692	92.308
120	1	13	7.692	100.000

TABLE CLASS 5A (MODIFIED)
FREQUENCY/PERCENT DISTRIBUTION OF EXCURSION TIMES
FOR APPARANT REASON CODES BY PLANT
PLANT=491

DURATION	FREQUENCY	CUM FREQ	PERCENT	CUM PERCENT
1	2	2	1.786	1.786
2	43	45	38.393	40.179
3	2	47	1.786	41.964
4	4	51	3.571	45.536
5	26	77	23.214	68.750
10	10	87	8.929	77.679
15	3	90	2.679	80.357
18	1	91	0.893	81.250
20	6	97	5.357	86.607
22	1	98	0.893	87.500
23	1	99	0.893	88.393
30	4	103	3.571	91.964
45	3	106	2.679	94.643
60	2	108	1.786	96.429
80	1	109	0.893	97.321
150	1	110	0.893	98.214
960	1	111	0.893	99.107
1200	1	112	0.893	100.000

TABLE CLASS 5A (MODIFIED)
FREQUENCY/PERCENT DISTRIBUTION OF EXCURSION TIMES
FOR APPARANT REASON CODES BY PLANT
PLANT=586

DURATION	FREQUENCY	CUM FREQ	PERCENT	CUM PERCENT
1	2	2	20.000	20.000
2	1	3	10.000	30.000
5	1	4	10.000	40.000
10	1	5	10.000	50.000
100	1	6	10.000	60.000
1200	1	7	10.000	70.000
1230	1	8	10.000	80.000
1320	1	9	10.000	90.000
1440	1	10	10.000	100.000

TABLE CLASS 5A (MODIFIED)
FREQUENCY/PERCENT DISTRIBUTION OF EXCURSION TIMES
FOR APPARANT REASON CODES BY PLANT
PLANT=664

DURATION	FREQUENCY	CUM FREQ	PERCENT	CUM PERCENT
1	12	12	46.154	46.154
2	6	18	23.077	69.231
3	1	19	3.846	73.077
5	4	23	15.385	88.462
8	1	24	3.846	92.308
10	1	25	3.846	96.154
270	1	26	3.846	100.000

TABLE CLASS 5A (MODIFIED)
FREQUENCY/PERCENT DISTRIBUTION OF EXCURSION TIMES
FOR APPARANT REASON CODES BY PLANT
PLANT=782

DURATION	FREQUENCY	CUM FREQ	PERCENT	CUM PERCENT
2	2	2	11.765	11.765
5	2	4	11.765	23.529
10	2	6	11.765	35.294
15	1	7	5.882	41.176
35	1	8	5.882	47.059
40	1	9	5.882	52.941
75	1	10	5.882	58.824
90	1	11	5.882	64.706
120	1	12	5.882	70.588
180	1	13	5.882	76.471
510	1	14	5.882	82.353
540	1	15	5.882	88.235
780	1	16	5.882	94.118
1260	1	17	5.882	100.000

TABLE CLASS 5A (MODIFIED)
FREQUENCY/PERCENT DISTRIBUTION OF EXCURSION TIMES
FOR APPARANT REASON CODES BY PLANT
PLANT=786

DURATION	FREQUENCY	CUM FREQ	PERCENT	CUM PERCENT
2	2	2	10.526	10.526
5	4	6	21.053	31.579
10	1	7	5.263	36.842
20	1	8	5.263	42.105
60	1	9	5.263	47.368
70	1	10	5.263	52.632
90	1	11	5.263	57.895
180	1	12	5.263	63.158
280	1	13	5.263	68.421
285	1	14	5.263	73.684
450	1	15	5.263	78.947
465	1	16	5.263	84.211
825	1	17	5.263	89.474
1785	1	18	5.263	94.737
1800	1	19	5.263	100.000

TABLE CLASS 5A (MODIFIED)
FREQUENCY/PERCENT DISTRIBUTION OF EXCURSION TIMES
FOR APPARANT REASON CODES BY PLANT
PLANT=928

DURATION	FREQUENCY	CUM FREQ	PERCENT	CUM PERCENT
1	80	80	42.553	42.553
2	32	112	17.021	59.574
3	4	116	2.128	61.702
4	3	119	1.596	63.298
5	22	141	11.702	75.000
6	3	144	1.596	76.596
7	2	146	1.064	77.660
8	3	149	1.596	79.255
10	10	159	5.319	84.574
14	1	160	0.532	85.106
15	7	167	3.723	88.830
20	4	171	2.128	90.957
25	4	175	2.128	93.085
30	2	177	1.064	94.149
40	1	178	0.532	94.681
75	1	179	0.532	95.213
160	1	180	0.532	95.745
165	1	181	0.532	96.277
240	2	183	1.064	97.340
280	1	184	0.532	97.872
625	1	185	0.532	98.404
675	1	186	0.532	98.936
840	1	187	0.532	99.468
1800	1	188	0.532	100.000

TABLE CLASS 5A (MODIFIED)
FREQUENCY/PERCENT DISTRIBUTION OF EXCURSION TIMES
FOR APPARANT REASON CODES BY PLANT
PLANT=1306

DURATION	FREQUENCY	CUM FREQ	PERCENT	CUM PERCENT
1	229	229	81.206	81.206
2	30	259	10.638	91.844
3	4	263	1.418	93.262
5	3	266	1.064	94.326
7	2	268	0.709	95.035
10	1	269	0.355	95.390
20	1	270	0.355	95.745
30	3	273	1.064	96.809
40	1	274	0.355	97.163
45	3	277	1.064	98.227
50	1	278	0.355	98.582
60	1	279	0.355	98.936
70	2	281	0.709	99.645
180	1	282	0.355	100.000

TABLE CLASS 5A (MODIFIED)
FREQUENCY/PERCENT DISTRIBUTION OF EXCURSION TIMES
FOR APPARANT REASON CODES BY PLANT
PLANT=2653

DURATION	FREQUENCY	CUM FREQ	PERCENT	CUM PERCENT
1	124	124	97.638	97.638
3	2	126	1.575	99.213
4	1	127	0.787	100.000

TABLE CLASS 5A (MODIFIED)
FREQUENCY/PERCENT DISTRIBUTION OF EXCURSION TIMES
FOR APPARANT REASON CODES BY PLANT
PLANT#3141

DURATION	FREQUENCY	CUM FREQ	PERCENT	CUM PERCENT
1	3	3	16.667	16.667
3	1	4	5.556	22.222
4	2	6	11.111	33.333
5	3	9	16.667	50.000
8	2	11	11.111	61.111
10	2	13	11.111	72.222
18	1	14	5.556	77.778
20	2	16	11.111	88.889
33	1	17	5.556	94.444
135	1	18	5.556	100.000

TABLE CLASS 5A (MODIFIED)
FREQUENCY/PERCENT DISTRIBUTION OF EXCURSION TIMES
FOR APPARANT REASON CODES BY PLANT
PLANT=8011

DURATION	FREQUENCY	CUM FREQ	PERCENT	CUM PERCENT
1	49	49	57.647	57.647
3	3	52	3.529	61.176
5	11	63	12.941	74.118
7	2	65	2.353	76.471
10	6	71	7.059	83.529
15	1	72	1.176	84.706
20	1	73	1.176	85.882
30	1	74	1.176	87.059
35	1	75	1.176	88.235
40	2	77	2.353	90.588
50	1	78	1.176	91.765
65	1	79	1.176	92.941
105	1	80	1.176	94.118
120	1	81	1.176	95.294
160	1	82	1.176	96.471
360	2	84	2.353	98.824
660	1	85	1.176	100.000

SOURCE=DATA BASE I

OBS	PLANT	MONTH	DAY	YEAR	TIME	PH	DURATION	RCODE	NCODE
1	1306	12	5	1977	1240	3.9	1	6	6
2	1306	12	6	1977	1410	2.2	1	6	6
3	1306	12	8	1977	1245	9.8	1	6	6
4	1306	12	9	1977	930	2.7	1	6	6
5	1306	12	13	1977	1350	4.4	1	6	6
6	1306	12	13	1977	1350	9.4	1	6	6
7	1306	12	14	1977	1310	2.9	1	6	6
8	1306	12	14	1977	1315	4.3	1	6	6
9	1306	12	14	1977	1315	9.3	1	6	6
10	1306	12	16	1977	1225	9.9	1	6	6
11	1306	12	16	1977	1225	5.0	1	6	6
12	1306	12	16	1977	1615	10.4	1	6	6
13	1306	12	17	1977	1500	5.8	1	6	6
14	1306	12	19	1977	1220	9.6	1	6	6
15	1306	12	19	1977	1220	5.0	1	6	6
16	1306	12	20	1977	1245	0.3	1	6	6
17	1306	12	20	1977	1250	4.3	1	6	6
18	1306	12	20	1977	1250	9.6	1	6	6
19	1306	12	21	1977	1220	4.9	1	6	6
20	1306	12	21	1977	1220	9.8	1	6	6
21	1306	12	22	1977	1310	9.5	1	6	6
22	1306	12	22	1977	1310	2.0	1	6	6
23	1306	12	22	1977	1315	4.3	1	6	6
24	1306	12	22	1977	1615	9.8	1	6	6
25	1306	12	23	1977	330	9.4	60	3	3
26	1306	12	25	1977	1245	0.0	1	6	6
27	1306	12	29	1977	915	4.6	1	6	6
28	1306	12	29	1977	915	11.0	1	6	6
29	1306	12	29	1977	935	4.6	1	6	6
30	1306	12	29	1977	1345	4.8	1	6	6
31	1306	12	29	1977	1345	5.0	1	6	6
32	1306	12	29	1977	1345	5.6	1	6	6
33	1306	12	29	1977	1345	10.6	1	6	6
34	1306	12	29	1977	1345	10.8	1	6	6
35	1306	12	29	1977	1345	11.8	1	6	6
36	1306	12	30	1977	1550	5.4	1	6	6
37	1306	1	4	1978	940	1.6	1	6	6
38	1306	1	10	1978	1230	4.0	1	6	6
39	1306	1	11	1978	1600	10.6	5	6	6
40	1306	1	19	1978	1000	4.3	1	6	6
41	1306	1	28	1978	2000	10.2	1	6	6
42	1306	1	29	1978	810	2.2	10	6	6
43	1306	2	2	1978	530	9.4	70	3	3
44	1306	2	2	1978	1345	10.3	1	6	6
45	1306	2	5	1978	1010	5.2	1	6	6
46	1306	2	6	1978	1020	1.0	1	6	6
47	1306	2	14	1978	1340	4.8	2	6	6
48	1306	2	15	1978	1240	9.6	7	6	6
49	1306	2	15	1978	1240	1.0	7	6	6
50	1306	2	16	1978	1250	9.8	2	6	6
51	1306	2	16	1978	1250	4.4	2	6	6
52	1306	2	17	1978	1230	9.6	2	6	6
53	1306	2	17	1978	1230	3.2	2	6	6
54	1306	2	20	1978	930	4.4	2	6	6

SOURCE=DATA BASE I

OBS	PLANT	MONTH	DAY	YEAR	TIME	PH	DURATION	RCODE	NCODE
55	1306	2	22	1978	1200	9.8	1	6	6
56	1306	2	22	1978	1200	5.5	1	6	6
57	1306	2	23	1978	1145	4.6	2	6	6
58	1306	2	23	1978	1145	9.6	2	6	6
59	1306	2	27	1978	1300	9.8	1	6	6
60	1306	2	27	1978	1300	4.2	1	6	6
61	1306	3	1	1978	1200	5.0	1	6	6
62	1306	3	2	1978	1200	5.0	1	6	6
63	1306	3	3	1978	1000	5.6	1	6	6
64	1306	3	6	1978	1230	9.6	1	6	6
65	1306	3	8	1978	1010	4.0	1	6	6
66	1306	3	9	1978	1240	5.8	1	6	6
67	1306	3	10	1978	1040	4.6	1	6	6
68	1306	3	15	1978	1150	4.2	1	6	6
69	1306	3	16	1978	1710	10.5	180	3	3
70	1306	3	20	1978	940	9.6	2	6	6
71	1306	3	20	1978	940	4.0	2	6	6
72	1306	3	21	1978	940	4.0	1	6	6
73	1306	3	22	1978	940	4.2	2	6	6
74	1306	3	23	1978	940	4.0	1	6	6
75	1306	3	27	1978	940	4.0	1	6	6
76	1306	3	31	1978	940	4.4	1	6	6
77	1306	4	5	1978	930	4.0	1	6	6
78	1306	4	6	1978	1150	4.4	1	6	6
79	1306	4	7	1978	940	4.0	1	6	6
80	1306	4	10	1978	1000	4.0	1	6	6
81	1306	4	12	1978	920	5.0	30	6	6
82	1306	4	12	1978	1000	4.0	1	6	6
83	1306	4	13	1978	1000	4.0	1	6	6
84	1306	4	14	1978	940	2.0	1	6	6
85	1306	4	16	1978	1530	9.2	40	1	1
86	1306	4	17	1978	1310	9.6	20	1	1
87	1306	4	18	1978	930	5.9	20	3	3
88	1306	4	19	1978	1010	4.0	1	6	6
89	1306	4	20	1978	2400	3.0	1	6	6
90	1306	4	22	1978	930	4.0	1	6	6
91	1306	4	24	1978	940	4.0	1	6	6
92	1306	4	25	1978	1040	4.0	1	6	6
93	1306	4	26	1978	945	4.2	1	6	6
94	1306	4	27	1978	1020	10.8	60	2	2
95	1306	5	1	1978	940	9.2	1	6	6
96	1306	5	1	1978	940	4.2	1	6	6
97	1306	5	2	1978	940	4.2	1	6	6
98	1306	5	2	1978	940	9.2	1	6	6
99	1306	5	3	1978	1150	9.2	1	6	6
100	1306	5	3	1978	1150	4.2	1	6	6
101	1306	5	4	1978	920	5.4	1	6	6
102	1306	5	4	1978	1140	9.2	1	6	6
103	1306	5	4	1978	1140	4.2	1	6	6
104	1306	5	5	1978	935	9.2	1	6	6
105	1306	5	5	1978	935	4.2	1	6	6
106	1306	5	8	1978	1145	9.2	1	6	6
107	1306	5	8	1978	1145	4.2	1	6	6
108	1306	5	9	1978	1140	9.2	1	6	6

SOURCE=DATA BASE I

OBS	PLANT	MONTH	DAY	YEAR	TIME	PH	DURATION	RCODE	NCODE
109	1306	5	9	1978	1140	4.2	1	6	6
110	1306	5	10	1978	945	9.2	1	6	6
111	1306	5	10	1978	945	4.2	1	6	6
112	1306	5	11	1978	950	9.2	1	6	6
113	1306	5	11	1978	950	4.2	1	6	6
114	1306	5	12	1978	945	9.2	1	6	6
115	1306	5	12	1978	945	4.2	1	6	6
116	1306	5	15	1978	930	5.6	5	6	6
117	1306	5	15	1978	1030	4.0	1	6	6
118	1306	5	15	1978	1030	10.0	1	6	6
119	1306	5	16	1978	920	5.5	5	6	6
120	1306	5	16	1978	1030	5.4	1	6	6
121	1306	5	16	1978	1040	3.6	1	6	6
122	1306	5	16	1978	1040	9.6	1	6	6
123	1306	5	17	1978	925	9.2	1	6	6
124	1306	5	17	1978	925	4.1	1	6	6
125	1306	5	19	1978	900	4.4	1	6	6
126	1306	5	19	1978	900	9.2	1	6	6
127	1306	5	20	1978	945	9.6	1	6	6
128	1306	5	20	1978	945	4.6	1	6	6
129	1306	5	22	1978	1050	5.5	1	6	6
130	1306	5	22	1978	1050	9.6	1	6	6
131	1306	5	23	1978	950	4.0	1	6	6
132	1306	5	23	1978	950	10.0	1	6	6
133	1306	5	24	1978	1040	4.6	1	6	6
134	1306	5	24	1978	1040	9.6	1	6	6
135	1306	5	25	1978	940	9.6	1	6	6
136	1306	5	25	1978	940	4.6	1	6	6
137	1306	5	30	1978	940	4.6	1	6	6
138	1306	5	30	1978	940	9.8	1	6	6
139	1306	5	31	1978	1000	9.6	1	6	6
140	1306	5	31	1978	1000	4.6	1	6	6
141	1306	6	1	1978	110	9.8	70	3	3
142	1306	6	2	1978	1220	9.8	1	6	6
143	1306	6	2	1978	1220	4.7	1	6	6
144	1306	6	4	1978	940	5.0	3	6	6
145	1306	6	4	1978	940	10.0	3	6	6
146	1306	6	5	1978	900	9.2	40	6	6
147	1306	6	12	1978	1410	1.6	1	6	6
148	1306	6	13	1978	950	4.2	1	6	6
149	1306	6	14	1978	1010	4.0	1	6	6
150	1306	6	15	1978	940	4.0	1	6	6
151	1306	6	16	1978	940	4.0	1	6	6
152	1306	6	19	1978	940	9.4	2	6	6
153	1306	6	19	1978	940	4.4	2	6	6
154	1306	6	20	1978	945	9.4	2	6	6
155	1306	6	20	1978	945	4.4	2	6	6
156	1306	6	20	1978	945	9.4	2	6	6
157	1306	6	20	1978	945	4.4	2	6	6
158	1306	6	21	1978	1145	9.4	1	6	6
159	1306	6	21	1978	1145	4.4	1	6	6
160	1306	6	24	1978	1020	4.2	2	6	6
161	1306	6	24	1978	1020	10.0	2	6	6
162	1306	6	27	1978	1300	2.2	1	6	6

SOURCE=DATA BASE I

OBS	PLANT	MONTH	DAY	YEAR	TIME	PH	DURATION	RCODE	NCODE
163	1306	6	27	1978	1300	10.0	1	6	6
164	1306	6	28	1978	950	2.0	2	6	6
165	1306	6	28	1978	950	10.0	2	6	6
166	1306	7	3	1978	945	4.5	1	6	6
167	1306	7	3	1978	1215	4.2	1	6	6
168	1306	7	5	1978	945	9.3	1	6	6
169	1306	7	5	1978	945	3.9	1	6	6
170	1306	7	6	1978	1145	3.6	1	6	6
171	1306	7	7	1978	935	4.4	1	6	6
172	1306	7	7	1978	935	9.3	1	6	6
173	1306	7	8	1978	2010	9.2	45	3	3
174	1306	7	11	1978	1400	5.0	1	6	6
175	1306	7	11	1978	1400	9.4	1	6	6
176	1306	7	17	1978	1115	5.1	1	6	6
177	1306	7	17	1978	1130	9.3	1	6	6
178	1306	7	17	1978	1130	3.8	1	6	6
179	1306	7	18	1978	1120	4.3	1	6	6
180	1306	7	18	1978	1120	9.4	1	6	6
181	1306	7	18	1978	1500	5.8	1	6	6
182	1306	7	19	1978	1115	5.3	1	6	6
183	1306	7	19	1978	1115	3.8	1	6	6
184	1306	7	20	1978	1120	4.3	1	6	6
185	1306	7	20	1978	1120	9.3	1	6	6
186	1306	7	21	1978	1040	4.3	1	6	6
187	1306	7	21	1978	1040	9.3	1	6	6
188	1306	7	24	1978	1000	4.3	1	6	6
189	1306	7	24	1978	1000	9.3	1	6	6
190	1306	7	25	1978	945	4.3	1	6	6
191	1306	7	25	1978	945	10.0	1	6	6
192	1306	7	26	1978	1030	4.6	1	6	6
193	1306	7	26	1978	1030	9.2	1	6	6
194	1306	7	27	1978	1145	4.3	1	6	6
195	1306	7	27	1978	1145	9.3	1	6	6
196	1306	7	28	1978	830	4.3	1	6	6
197	1306	7	28	1978	830	9.4	1	6	6
198	1306	7	28	1978	840	9.7	1	6	6
199	1306	7	28	1978	845	9.8	1	6	6
200	1306	7	31	1978	1015	4.4	1	6	6
201	1306	7	31	1978	1015	9.4	1	6	6
202	1306	8	1	1978	950	3.8	1	6	6
203	1306	8	1	1978	950	10.0	1	6	6
204	1306	8	2	1978	1245	9.8	1	6	6
205	1306	8	2	1978	1245	4.2	1	6	6
206	1306	8	3	1978	1020	9.6	2	6	6
207	1306	8	3	1978	1020	4.4	2	6	6
208	1306	8	4	1978	1020	9.4	1	6	6
209	1306	8	4	1978	1020	4.6	1	6	6
210	1306	8	8	1978	1025	9.4	1	6	6
211	1306	8	8	1978	1025	4.4	1	6	6
212	1306	8	9	1978	1030	9.4	3	6	6
213	1306	8	9	1978	1030	4.4	3	6	6
214	1306	8	10	1978	1115	9.4	2	6	6
215	1306	8	10	1978	1115	4.4	2	6	6
216	1306	8	11	1978	1120	9.8	1	6	6

SOURCE*DATA BASE I

OBS	PLANT	MONTH	DAY	YEAR	TIME	PH	DURATION	RCODE	NCODE
217	1306	8	11	1978	1120	3.6	1	6	6
218	1306	8	14	1978	1200	4.4	2	6	6
219	1306	8	16	1978	1040	4.2	1	6	6
220	1306	8	17	1978	1040	4.4	1	6	6
221	1306	8	21	1978	1000	4.4	1	6	6
222	1306	8	21	1978	1000	9.6	1	6	6
223	1306	8	22	1978	1240	4.2	1	6	6
224	1306	8	23	1978	1145	4.4	1	6	6
225	1306	8	24	1978	1020	4.4	1	6	6
226	1306	8	25	1978	1000	4.0	2	6	6
227	1306	8	26	1978	1300	4.2	1	6	6
228	1306	8	28	1978	1000	4.4	1	6	6
229	1306	8	29	1978	1010	4.6	2	6	6
230	1306	8	30	1978	1010	4.4	1	6	6
231	1306	8	31	1978	1000	2.0	2	6	6
232	1306	9	1	1978	1015	4.2	1	6	6
233	1306	9	3	1978	930	4.8	1	6	6
234	1306	9	4	1978	940	2.6	1	6	6
235	1306	9	6	1978	1145	4.0	1	6	6
236	1306	9	7	1978	1200	4.0	2	6	6
237	1306	9	8	1978	1205	0.0	1	6	6
238	1306	9	11	1978	1200	4.4	1	6	6
239	1306	9	11	1978	1200	10.0	1	6	6
240	1306	9	15	1978	940	4.4	1	6	6
241	1306	9	16	1978	1250	9.7	45	3	3
242	1306	9	28	1978	1340	3.0	1	6	6
243	1306	9	28	1978	1340	10.0	1	6	6
244	1306	9	29	1978	820	9.8	1	6	6
245	1306	9	29	1978	820	4.2	1	6	6
246	1306	10	2	1978	820	10.8	1	6	6
247	1306	10	4	1978	25	5.7	1	6	6
248	1306	10	4	1978	745	9.9	1	6	6
249	1306	10	4	1978	745	3.8	1	6	6
250	1306	10	4	1978	1815	5.7	1	6	6
251	1306	10	7	1978	1000	2.2	30	6	6
252	1306	10	7	1978	1000	10.6	30	6	6
253	1306	10	9	1978	815	4.0	1	6	6
254	1306	10	9	1978	815	10.5	1	6	6
255	1306	10	10	1978	830	9.2	1	6	6
256	1306	10	10	1978	830	4.1	1	6	6
257	1306	10	13	1978	910	4.0	1	6	6
258	1306	10	13	1978	910	11.2	1	6	6
259	1306	10	14	1978	1510	4.9	1	5	5
260	1306	10	14	1978	1535	1.4	1	5	5
261	1306	10	16	1978	1245	4.2	1	6	6
262	1306	10	16	1978	1245	11.0	1	6	6
263	1306	10	17	1978	925	9.5	1	6	6
264	1306	10	17	1978	1120	0.2	1	6	6
265	1306	10	17	1978	1120	13.8	1	6	6
266	1306	10	19	1978	920	2.7	1	6	6
267	1306	10	19	1978	920	11.3	1	6	6
268	1306	10	20	1978	835	3.8	1	6	6
269	1306	10	20	1978	835	10.8	1	6	6
270	1306	10	20	1978	1955	10.2	50	3	3

SOURCE=DATA BASE 1

OBS	PLANT	MONTH	DAY	YEAR	TIME	PH	DURATION	RCODE	NCODE
271	1306	10	25	1978	815	4.2	1	6	6
272	1306	10	25	1978	815	11.0	1	6	6
273	1306	10	25	1978	1400	9.4	1	6	6
274	1306	10	26	1978	740	3.2	1	6	6
275	1306	10	26	1978	740	10.4	1	6	6
276	1306	10	30	1978	1140	3.0	1	6	6
277	1306	10	30	1978	1140	9.6	1	6	6
278	1306	10	30	1978	1446	9.8	1	6	6
279	1306	10	31	1978	2015	9.4	45	3	3
280	1306	11	1	1978	1040	4.6	1	6	6
281	1306	11	3	1978	300	9.2	10	2	2
282	1306	11	20	1978	800	4.0	1	6	6
283	1306	11	20	1978	800	11.0	1	6	6
284	1306	11	21	1978	740	4.0	1	6	6
285	1306	11	21	1978	740	11.0	1	6	6
286	1306	11	22	1978	740	4.0	1	6	6
287	1306	11	22	1978	740	11.0	1	6	6
288	1306	11	24	1978	1220	4.2	1	6	6
289	2128	4	13	1978	305	5.7	13	4	4
290	2128	4	13	1978	440	5.0	36	4	4
291	2653	12	5	1977	930	4.0	1	6	6
292	2653	12	7	1977	815	4.0	1	6	6
293	2653	12	9	1977	830	3.8	1	6	6
294	2653	12	12	1977	2230	10.8	195	1	1
295	2653	12	14	1977	1400	3.2	1	6	6
296	2653	12	16	1977	900	0.0	1	6	6
297	2653	12	19	1977	800	4.0	1	6	6
298	2653	12	21	1977	830	4.0	1	6	6
299	2653	12	23	1977	900	4.0	1	6	6
300	2653	12	27	1977	500	2.2	420	1	1
301	2653	1	13	1978	945	4.0	1	6	6
302	2653	1	18	1978	1430	4.0	1	6	6
303	2653	1	20	1978	1020	4.0	1	6	6
304	2653	1	20	1978	1740	4.0	1	6	6
305	2653	1	23	1978	1025	4.0	1	6	6
306	2653	1	25	1978	1338	4.0	1	6	6
307	2653	1	26	1978	2200	9.1	20	4	4
308	2653	1	26	1978	2430	9.4	140	4	4
309	2653	1	27	1978	1510	4.0	1	6	6
310	2653	1	31	1978	1120	9.4	210	2	2
311	2653	2	1	1978	1240	4.0	1	6	6
312	2653	2	3	1978	1010	4.0	1	6	6
313	2653	2	7	1978	1310	4.0	1	6	6
314	2653	2	13	1978	1510	4.0	1	6	6
315	2653	2	15	1978	1230	4.0	1	6	6
316	2653	2	20	1978	1830	9.2	120	5	5
317	2653	2	21	1978	1500	4.0	1	6	6
318	2653	3	2	1978	1040	10.0	90	5	5
319	2653	3	9	1978	1500	4.0	1	6	6
320	2653	3	9	1978	1500	10.0	1	6	6
321	2653	3	21	1978	2350	9.2	90	5	5
322	2653	3	22	1978	1300	9.9	1	6	6
323	2653	3	24	1978	1000	9.8	1	6	6
324	2653	3	27	1978	1015	4.0	1	6	6

SOURCE DATA BASE I

OBS	PLANT	MONTH	DAY	YEAR	TIME	PH	DURATION	RCODE	NCODE
325	2653	3	27	1978	1015	10.0	1	6	6
326	2653	3	27	1978	1045	4.8	3	6	6
327	2653	3	27	1978	1045	10.0	3	6	6
328	2653	4	7	1978	945	9.2	240	2	2
329	2653	4	10	1978	1245	5.0	1	6	6
330	2653	4	12	1978	815	10.0	1	6	6
331	2653	4	14	1978	820	4.0	1	6	6
332	2653	4	14	1978	820	10.0	1	6	6
333	2653	4	17	1978	830	9.8	1	6	6
334	2653	4	21	1978	830	2.0	1	6	6
335	2653	4	21	1978	830	10.0	1	6	6
336	2653	4	27	1978	1520	9.7	4	6	6
337	2653	5	1	1978	1515	4.0	1	6	6
338	2653	5	3	1978	830	3.8	1	6	6
339	2653	5	5	1978	840	4.2	1	6	6
340	2653	5	8	1978	820	4.4	1	6	6
341	2653	5	10	1978	840	4.4	1	6	6
342	2653	5	11	1978	1225	3.6	125	1	1
343	2653	5	12	1978	820	4.4	1	6	6
344	2653	5	15	1978	1040	4.2	1	6	6
345	2653	5	17	1978	950	3.4	1	6	6
346	2653	5	19	1978	1025	4.4	1	6	6
347	2653	5	22	1978	820	4.4	1	6	6
348	2653	5	24	1978	830	4.4	1	6	6
349	2653	5	26	1978	825	4.4	1	6	6
350	2653	5	30	1978	840	4.2	1	6	6
351	2653	6	5	1978	645	3.0	240	1	1
352	2653	6	7	1978	1025	4.0	1	6	6
353	2653	6	9	1978	1025	4.4	1	6	6
354	2653	6	12	1978	825	4.4	1	6	6
355	2653	6	16	1978	1020	3.4	325	1	1
356	2653	6	16	1978	1550	5.9	25	1	1
357	2653	6	16	1978	1825	5.8	25	1	1
358	2653	6	19	1978	840	4.4	1	6	6
359	2653	6	21	1978	831	4.0	1	6	6
360	2653	6	23	1978	855	4.4	1	6	6
361	2653	6	23	1978	855	9.6	1	6	6
362	2653	6	26	1978	830	4.0	1	6	6
363	2653	6	26	1978	830	10.0	1	6	6
364	2653	6	30	1978	830	4.0	1	6	6
365	2653	6	30	1978	830	9.6	1	6	6
366	2653	7	5	1978	1400	10.0	1	6	6
367	2653	7	7	1978	1000	10.0	1	6	6
368	2653	7	10	1978	2000	10.0	1	6	6
369	2653	7	12	1978	800	3.0	1	6	6
370	2653	7	12	1978	800	12.0	1	6	6
371	2653	7	14	1978	800	4.0	1	6	6
372	2653	7	14	1978	800	10.0	1	6	6
373	2653	7	17	1978	900	10.0	1	6	6
374	2653	7	19	1978	930	10.0	1	6	6
375	2653	7	21	1978	915	2.0	1	6	6
376	2653	7	21	1978	915	10.0	1	6	6
377	2653	7	24	1978	810	4.0	1	6	6
378	2653	7	28	1978	755	2.[illegible]	1	6	6

SOURCE=DATA BASE 1

OBS	PLANT	MONTH	DAY	YEAR	TIME	PH	DURATION	RCODE	NCODE
379	2653	7	31	1978	750	4.0	1	6	6
380	2653	8	2	1978	820	9.8	1	6	6
381	2653	8	4	1978	840	4.4	1	6	6
382	2653	8	5	1978	1215	0.0	1	6	6
383	2653	8	8	1978	2015	9.6	120	2	2
384	2653	8	14	1978	700	4.0	1	6	6
385	2653	8	16	1978	745	10.0	1	6	6
386	2653	8	18	1978	840	5.6	1	6	6
387	2653	8	18	1978	840	10.0	1	6	6
388	2653	8	21	1978	825	9.8	1	6	6
389	2653	8	23	1978	840	9.8	1	6	6
390	2653	8	25	1978	1010	9.8	1	6	6
391	2653	8	28	1978	845	9.8	1	6	6
392	2653	8	30	1978	850	4.4	1	6	6
393	2653	9	1	1978	1020	1.0	1	6	6
394	2653	9	5	1978	1035	4.2	1	6	6
395	2653	9	7	1978	50	5.8	10	1	1
396	2653	9	7	1978	145	5.2	105	1	1
397	2653	9	7	1978	830	4.2	160	1	1
398	2653	9	7	1978	1105	0.0	15	1	1
399	2653	9	7	1978	1105	10.0	15	1	1
400	2653	9	7	1978	1330	1.0	1	6	6
401	2653	9	11	1978	940	4.0	1	6	6
402	2653	9	13	1978	830	4.2	1	6	6
403	2653	9	15	1978	1010	4.2	1	6	6
404	2653	9	18	1978	840	4.0	1	6	6
405	2653	9	20	1978	900	3.8	1	6	6
406	2653	9	22	1978	830	3.6	1	6	6
407	2653	9	24	1978	850	4.0	1	6	6
408	2653	9	25	1978	815	4.2	1	6	6
409	2653	9	27	1978	900	3.8	1	6	6
410	2653	10	2	1978	905	4.0	1	6	6
411	2653	10	4	1978	840	4.0	1	6	6
412	2653	10	6	1978	815	4.2	1	6	6
413	2653	10	9	1978	850	4.2	1	6	6
414	2653	10	11	1978	815	4.0	1	6	6
415	2653	10	13	1978	850	3.8	1	6	6
416	2653	10	16	1978	845	4.0	1	6	6
417	2653	10	16	1978	845	9.6	1	6	6
418	2653	10	18	1978	850	9.2	1	6	6
419	2653	10	18	1978	850	3.8	1	6	6
420	2653	10	23	1978	840	4.0	1	6	6
421	2653	10	25	1978	850	4.0	1	6	6
422	2653	10	27	1978	840	0.0	1	6	6
423	2653	10	30	1978	1005	4.2	1	6	6
424	2653	10	31	1978	840	3.8	1	6	6
425	2653	11	1	1978	815	5.1	120	1	1
426	2653	11	3	1978	1000	4.0	1	6	6
427	2653	11	6	1978	700	4.0	1	6	6
428	2653	11	8	1978	700	1.0	1	6	6
429	2653	11	10	1978	700	4.0	1	6	6
430	2653	11	11	1978	600	0.0	1	6	6
431	2653	11	11	1978	600	14.0	1	6	6
432	2653	11	13	1978	700	4.0	1	6	6

SOURCE=DATA BASE I

OBS	PLANT	MONTH	DAY	YEAR	TIME	PH	DURATION	RCODE	NCODE
433	2653	11	15	1978	700	4.0	1	6	6
434	2653	11	17	1978	700	2.8	1	6	6
435	2653	11	20	1978	950	4.0	1	6	6
436	2653	11	22	1978	1020	4.0	1	6	6
437	2653	11	27	1978	830	4.0	1	6	6
438	2653	11	29	1978	600	4.0	1	6	6
439	3141	12	27	1977	210	9.2	3	5	5
440	3141	12	27	1977	218	9.2	2	5	5
441	3141	12	27	1977	1218	5.6	5	5	5
442	3141	12	27	1977	1230	5.0	7	5	5
443	3141	12	27	1977	1237	5.3	8	5	5
444	3141	12	28	1977	315	4.6	21	5	5
445	3141	12	28	1977	440	4.0	7	5	5
446	3141	12	28	1977	447	3.2	13	5	5
447	3141	12	28	1977	500	4.9	7	5	5
448	3141	12	28	1977	510	5.7	2	5	5
449	3141	12	28	1977	922	5.4	5	5	5
450	3141	12	28	1977	930	4.8	7	5	5
451	3141	12	28	1977	937	5.3	7	5	5
452	3141	12	28	1977	944	5.8	3	5	5
453	3141	12	28	1977	1000	5.2	22	5	5
454	3141	12	30	1977	837	9.9	720	5	5
455	3141	12	31	1977	837	9.4	240	5	5
456	3141	1	2	1978	210	9.7	22	5	5
457	3141	1	2	1978	620	9.8	35	5	5
458	3141	1	2	1978	1035	9.8	22	5	5
459	3141	1	2	1978	1145	9.8	13	5	5
460	3141	1	5	1978	947	5.3	7	5	5
461	3141	1	6	1978	1045	9.8	21	5	5
462	3141	1	7	1978	800	9.8	95	5	5
463	3141	1	8	1978	150	12.4	30	5	5
464	3141	1	8	1978	505	9.5	75	5	5
465	3141	1	8	1978	1230	10.2	30	5	5
466	3141	1	10	1978	230	9.7	105	5	5
467	3141	1	10	1978	635	9.5	30	5	5
468	3141	1	10	1978	750	9.3	70	5	5
469	3141	1	13	1978	135	5.2	5	5	5
470	3141	1	13	1978	547	5.2	8	5	5
471	3141	1	13	1978	607	5.8	5	5	5
472	3141	1	13	1978	623	3.2	75	5	5
473	3141	1	14	1978	405	4.0	7	5	5
474	3141	1	14	1978	1105	5.4	37	5	5
475	3141	1	15	1978	1140	5.9	2	5	5
476	3141	1	16	1978	210	5.2	7	5	5
477	3141	1	16	1978	820	4.5	15	8	5
478	3141	1	16	1978	850	5.3	7	5	5
479	3141	1	17	1978	520	10.1	15	5	5
480	3141	1	17	1978	715	9.5	330	5	5
481	3141	1	17	1978	935	5.6	5	5	5
482	3141	1	17	1978	1215	9.8	240	5	5
483	3141	1	19	1978	815	4.9	7	5	5
484	3141	1	22	1978	610	4.5	7	5	5
485	3141	1	23	1978	348	9.5	7	5	5
486	3141	1	23	1978	1250	9.5	70	5	5

SOURCE=DATA BASE I

OBS	PLANT	MONTH	DAY	YEAR	TIME	PH	DURATION	RCODE	NCODE
487	3141	1	24	1978	1025	9.2	2	5	5
488	3141	1	24	1978	1135	9.4	2	5	5
489	3141	1	27	1978	420	5.1	5	2	2
490	3141	1	27	1978	1250	5.9	5	1	1
491	3141	1	27	1978	1300	4.3	10	1	1
492	3141	1	28	1978	320	5.3	5	2	2
493	3141	1	28	1978	540	5.1	5	2	2
494	3141	1	28	1978	945	4.0	10	2	2
495	3141	1	28	1978	1400	3.5	15	2	2
496	3141	1	29	1978	1300	4.6	10	2	2
497	3141	1	31	1978	445	5.3	5	5	5
498	3141	1	31	1978	815	5.7	5	5	5
499	3141	2	1	1978	430	5.2	30	5	5
500	3141	2	1	1978	1025	9.1	3	5	5
501	3141	2	1	1978	1715	5.6	10	5	5
502	3141	2	2	1978	745	5.7	3	5	5
503	3141	2	2	1978	1210	5.9	3	5	5
504	3141	2	2	1978	2010	3.4	20	5	5
505	3141	2	3	1978	1650	4.8	15	5	5
506	3141	2	5	1978	210	9.6	80	5	5
507	3141	2	6	1978	230	9.2	30	5	5
508	3141	2	16	1978	135	3.1	30	2	2
509	3141	2	16	1978	805	10.1	35	2	2
510	3141	2	21	1978	1025	9.1	40	2	2
511	3141	2	22	1978	210	4.4	15	5	5
512	3141	2	22	1978	240	2.5	30	5	5
513	3141	2	23	1978	125	4.1	15	5	5
514	3141	2	23	1978	1255	5.9	3	5	5
515	3141	2	24	1978	415	4.2	15	5	5
516	3141	2	24	1978	2245	3.5	15	5	5
517	3141	2	25	1978	215	4.6	10	5	5
518	3141	2	25	1978	950	2.8	25	5	5
519	3141	2	25	1978	1310	4.3	10	5	5
520	3141	2	25	1978	1615	3.2	15	5	5
521	3141	2	26	1978	1450	5.8	5	5	5
522	3141	2	27	1978	115	5.6	20	5	5
523	3141	2	27	1978	140	5.9	10	5	5
524	3141	2	27	1978	220	5.6	5	5	5
525	3141	2	27	1978	1425	4.2	5	5	5
526	3141	2	27	1978	2340	3.5	10	5	5
527	3141	2	28	1978	940	4.3	5	5	5
528	3141	2	28	1978	1705	5.1	3	5	5
529	3141	3	1	1978	135	4.2	5	5	5
530	3141	3	1	1978	510	4.5	3	5	5
531	3141	3	1	1978	740	5.6	3	5	5
532	3141	3	1	1978	1300	3.0	20	6	6
533	3141	3	1	1978	1300	14.0	20	6	6
534	3141	3	1	1978	1435	3.7	10	5	5
535	3141	3	1	1978	2040	9.6	3	5	5
536	3141	3	1	1978	2050	9.3	3	5	5
537	3141	3	1	1978	2145	2.0	10	5	5
538	3141	3	1	1978	2200	9.1	5	5	5
539	3141	3	2	1978	935	3.3	3	5	5
540	3141	3	3	1978	1115	5.4	3	5	5

SOURCE=DATA BASE I

OBS	PLANT	MONTH	DAY	YEAR	TIME	PH	DURATION	RCODE	NCODE
541	3141	3	3	1978	1520	5.2	3	5	5
542	3141	3	5	1978	750	5.7	5	2	2
543	3141	3	5	1978	1735	5.7	50	2	2
544	3141	3	6	1978	1150	5.2	10	5	5
545	3141	3	6	1978	2305	4.9	3	5	5
546	3141	3	8	1978	550	5.6	3	5	5
547	3141	3	9	1978	505	9.3	4	6	6
548	3141	3	9	1978	1540	5.4	3	5	5
549	3141	3	10	1978	1115	2.6	5	5	5
550	3141	3	11	1978	1620	5.9	3	5	5
551	3141	3	13	1978	950	4.2	5	5	5
552	3141	3	17	1978	810	5.6	6	5	5
553	3141	3	18	1978	120	4.5	5	6	6
554	3141	3	19	1978	725	3.1	5	5	5
555	3141	3	19	1978	1815	4.2	10	6	6
556	3141	3	19	1978	2415	4.5	10	5	5
557	3141	3	20	1978	820	5.7	5	6	6
558	3141	3	20	1978	1135	5.8	3	6	6
559	3141	3	20	1978	1500	14.0	4	6	6
560	3141	3	22	1978	745	3.5	10	5	5
561	3141	3	23	1978	1450	4.0	5	5	5
562	3141	3	23	1978	2200	3.7	3	5	5
563	3141	3	24	1978	855	3.2	5	5	5
564	3141	3	24	1978	1305	4.0	5	5	5
565	3141	3	26	1978	1120	5.2	5	5	5
566	3141	4	3	1978	900	5.8	10	5	5
567	3141	4	24	1978	1235	9.1	3	5	5
568	3141	5	3	1978	720	4.2	15	5	5
569	3141	5	3	1978	850	9.7	15	5	5
570	3141	5	3	1978	1210	3.7	30	5	5
571	3141	5	18	1978	745	4.5	7	5	5
572	3141	5	27	1978	1800	9.7	5	2	2
573	3141	6	4	1978	2415	9.5	3	2	2
574	3141	6	4	1978	2420	9.2	3	2	2
575	3141	6	6	1978	120	9.5	3	2	2
576	3141	6	12	1978	700	9.4	15	5	5
577	3141	7	10	1978	1230	9.7	3	2	2
578	3141	7	19	1978	930	4.0	1	6	6
579	3141	7	19	1978	1000	3.8	1	6	6
580	3141	7	19	1978	1015	4.9	8	6	6
581	3141	7	19	1978	1025	5.6	10	6	6
582	3141	7	19	1978	1045	4.9	1	6	6
583	3141	8	21	1978	1045	5.9	135	6	6
584	3141	9	7	1978	915	9.2	2	2	2
585	3141	9	16	1978	1130	9.1	2	5	5
586	3141	9	16	1978	1135	9.5	8	5	5
587	3141	9	18	1978	745	9.4	5	6	6
588	3141	9	19	1978	105	9.4	18	6	6
589	3141	9	19	1978	1222	9.8	8	6	6
590	3141	9	19	1978	1230	9.2	33	6	6
591	3141	10	28	1978	1040	9.7	20	5	5
592	3141	11	1	1978	400	9.4	5	5	5
593	6662	12	2	1977	1945	9.9	65	2	2
594	6662	12	2	1977	2120	11.1	160	2	2

SOURCE=DATA BASE 1

OBS	PLANT	MONTH	DAY	YEAR	TIME	PH	DURATION	RCODE	NCODE
595	6662	12	3	1977	1345	3.9	12	2	2
596	6662	12	3	1977	1420	5.4	10	2	2
597	6662	1	13	1978	1953	9.6	142	2	2
598	6662	5	20	1978	1700	9.3	293	2	2
599	6662	9	6	1978	1005	4.0	14	2	2
600	6662	9	7	1978	1317	3.2	20	2	2
601	6662	9	19	1978	255	9.3	95	2	2
602	6662	11	5	1978	1934	3.3	266	2	2
603	6662	11	6	1978	808	11.6	204	2	2
604	6662	11	6	1978	1138	11.7	208	2	2
605	6662	11	6	1978	1703	5.9	12	2	2
606	8011	12	30	1977	1520	5.6	65	3	3
607	8011	12	31	1977	1250	5.5	50	3	3
608	8011	1	7	1978	2115	5.8	70	4	4
609	8011	1	9	1978	1430	5.6	160	6	6
610	8011	1	9	1978	1900	5.6	40	6	6
611	8011	1	10	1978	2030	5.8	5	6	6
612	8011	1	26	1978	400	11.6	360	6	6
613	8011	1	26	1978	1530	5.5	360	3	3
614	8011	1	27	1978	1000	5.6	120	3	3
615	8011	1	27	1978	1200	5.0	105	3	3
616	8011	1	27	1978	1440	5.8	60	4	4
617	8011	1	27	1978	1620	5.6	45	4	4
618	8011	1	28	1978	1330	4.8	1900	4	4
619	8011	1	29	1978	2120	2.8	660	3	3
620	8011	2	3	1978	1340	4.8	20	2	2
621	8011	2	3	1978	1420	9.8	20	3	3
622	8011	2	4	1978	1100	10.0	1	6	6
623	8011	2	10	1978	1500	5.4	35	6	6
624	8011	2	14	1978	1040	4.0	20	2	2
625	8011	2	15	1978	840	5.2	10	3	3
626	8011	2	16	1978	1520	2.8	5	3	3
627	8011	3	3	1978	1800	5.6	10	3	3
628	8011	3	16	1978	940	4.2	5	3	3
629	8011	3	18	1978	400	5.8	10	6	6
630	8011	3	21	1978	1050	4.0	10	6	6
631	8011	3	27	1978	1600	2.2	10	3	3
632	8011	3	29	1978	1020	5.9	5	2	2
633	8011	3	29	1978	1045	5.6	15	2	2
634	8011	3	29	1978	1115	5.5	15	2	2
635	8011	3	29	1978	1140	2.8	10	2	2
636	8011	3	29	1978	1200	4.6	1	3	3
637	8011	3	29	1978	1205	9.4	5	3	3
638	8011	3	29	1978	1250	5.8	5	3	3
639	8011	3	29	1978	1255	2.8	1	3	3
640	8011	3	29	1978	1300	5.7	5	3	3
641	8011	3	29	1978	1325	5.0	5	3	3
642	8011	3	29	1978	1340	4.0	5	3	3
643	8011	3	29	1978	1400	4.2	5	3	3
644	8011	3	29	1978	2400	4.0	5	3	3
645	8011	4	12	1978	1430	4.5	7	6	6
646	8011	4	12	1978	1430	10.4	7	6	6
647	8011	4	19	1978	540	4.0	40	3	3
648	8011	4	19	1978	620	9.5	30	3	3

SOURCE=DATA BASE 1

OBS	PLANT	MONTH	DAY	YEAR	TIME	PH	DURATION	RCODE	NCODE
649	8011	4	19	1978	715	5.2	15	3	3
650	8011	4	21	1978	1200	4.8	10	3	3
651	8011	4	21	1978	1220	5.9	5	2	2
652	8011	4	22	1978	130	3.5	1	3	3
653	8011	5	17	1978	800	9.9	1	6	6
654	8011	5	17	1978	800	4.4	1	6	6
655	8011	5	17	1978	800	4.1	1	6	6
656	8011	5	17	1978	800	4.2	1	6	6
657	8011	5	17	1978	800	10.4	1	6	6
658	8011	5	17	1978	1640	9.1	1	2	2
659	8011	5	17	1978	1730	13.8	2	2	2
660	8011	5	21	1978	1250	9.2	1	3	3
661	8011	6	17	1978	710	9.2	1	6	6
662	8011	6	21	1978	1105	11.3	3	6	6
663	8011	6	21	1978	1300	10.8	3	6	6
664	8011	6	23	1978	1730	2.0	1	3	3
665	8011	6	23	1978	1800	2.0	1	3	3
666	8011	6	27	1978	820	3.7	1	3	3
667	8011	7	10	1978	2030	4.7	5	3	3
668	8011	7	13	1978	1800	10.2	1	6	6
669	8011	7	27	1978	1100	3.0	1	6	6
670	8011	7	27	1978	1100	9.7	1	6	6
671	8011	7	30	1978	640	9.2	1	6	6
672	8011	7	30	1978	640	5.5	1	6	6
673	8011	8	1	1978	1400	10.4	1	6	6
674	8011	8	3	1978	750	12.0	1	6	6
675	8011	8	6	1978	630	11.2	1	6	6
676	8011	8	6	1978	645	11.4	1	6	6
677	8011	8	13	1978	940	1.0	1	6	6
678	8011	8	13	1978	940	10.5	1	6	6
679	8011	8	18	1978	1500	1.0	1	6	6
680	8011	8	18	1978	1500	10.2	1	6	6
681	8011	8	19	1978	1050	4.7	1	6	6
682	8011	8	19	1978	1050	10.0	1	6	6
683	8011	8	20	1978	740	9.1	1	6	6
684	8011	8	21	1978	740	9.6	1	6	6
685	8011	8	26	1978	755	10.1	1	6	6
686	8011	8	29	1978	1420	5.5	1	6	6
687	8011	9	10	1978	2130	9.6	1	6	6
688	8011	9	10	1978	2130	4.4	1	6	6
689	8011	9	10	1978	2215	2.4	1	6	6
690	8011	9	10	1978	2215	10.2	1	6	6
691	8011	9	26	1978	1100	13.0	3	6	6
692	8011	9	26	1978	1125	13.0	1	6	6
693	8011	9	26	1978	1130	13.0	1	6	6
694	8011	9	27	1978	1110	4.7	1	6	6
695	8011	9	27	1978	1145	5.8	1	6	6
696	8011	9	27	1978	1150	5.9	1	6	6
697	8011	10	12	1978	845	5.1	1	6	6
698	8011	10	14	1978	850	13.0	1	6	6
699	8011	10	14	1978	1150	5.5	1	6	6
700	8011	10	14	1978	1150	11.1	1	6	6
701	8011	10	27	1978	745	9.5	1	6	6
702	8011	11	17	1978	740	10.2	1	6	6

SOURCE=DATA BASE I

OBS	PLANT	MONTH	DAY	YEAR	TIME	PH	DURATION	RCODE	NCODE
703	8011	11	28	1978	740	9.2	1	6	6

SOURCE=DATA BASE II

OBS	PLANT	MONTH	DAY	YEAR	TIME	PH	DURATION	RCODE	NCODE
704	102	4	3	1978	500	10.5	3600	1	1
705	102	8	12	1978	1045	9.5	85	2	2
706	102	9	1	1978	200	10.6	3360	1	1
707	102	9	26	1978	900	9.8	1110	2	2
708	102	11	17	1978	1720	3.6	540	10	1
709	102	1	12	1979	630	10.2	390	2	2
710	102	2	16	1979	1550	10.5	85	2	2
711	102	3	3	1979	1025	3.5	285	10	1
712	102	3	3	1979	2100	4.0	300	11	4
713	102	6	22	1979	1530	5.9	2600	2	2
714	102	6	24	1979	1130	4.8	150	2	2
715	102	6	25	1979	1025	9.4	20	2	2
716	102	6	25	1979	1445	9.1	2	2	2
717	102	6	26	1979	1420	9.4	5	2	2
718	102	6	27	1979	820	10.0	45	2	2
719	102	6	27	1979	1620	9.2	1	2	2
720	102	7	2	1979	1730	9.2	40	2	2
721	102	7	4	1979	830	10.0	10	2	2
722	102	7	6	1979	1130	9.9	90	2	2
723	102	7	7	1979	800	9.1	3	2	2
724	102	7	7	1979	1730	9.3	120	2	2
725	102	7	8	1979	2100	9.3	45	2	2
726	102	7	11	1979	500	4.9	75	2	2
727	102	7	11	1979	2200	9.6	150	2	2
728	102	7	12	1979	930	9.5	120	2	2
729	102	7	13	1979	930	9.2	75	2	2
730	102	7	14	1979	700	9.6	1	2	2
731	102	7	15	1979	1330	9.5	120	2	2
732	150	1	17	1979	1718	5.2	19	1	1
733	150	1	25	1979	1417	9.2	2	8	5
734	150	1	26	1979	715	9.2	7	2	2
735	150	2	6	1979	1105	9.1	5	8	5
736	150	2	7	1979	1305	3.7	5	8	5
737	150	2	8	1979	900	3.6	15	3	6
738	150	2	10	1979	108	4.7	17	10	1
739	150	2	10	1979	2330	9.1	4	1	1
740	150	2	11	1979	1705	9.1	3	8	5
741	150	2	16	1979	1640	9.2	6	8	5
742	150	2	16	1979	2107	3.0	47	1	1
743	150	2	21	1979	1321	9.3	15	1	1
744	150	2	21	1979	1520	9.4	25	1	1
745	150	3	3	1979	515	9.3	106	10	2
746	150	3	3	1979	710	3.3	3	10	2
747	150	3	3	1979	715	9.4	5	10	2
748	150	3	3	1979	720	2.5	4	10	2
749	150	3	3	1979	725	9.5	3	10	2
750	150	3	3	1979	730	3.3	10	10	2

SOURCE=DATA BASE II

OBS	PLANT	MONTH	DAY	YEAR	TIME	PH	DURATION	RCODE	NCODE
751	150	3	3	1979	740	9.3	3	10	2
752	150	3	3	1979	745	4.1	4	10	2
753	150	3	4	1979	842	9.4	4	10	2
754	150	3	4	1979	917	9.2	12	10	2
755	150	3	4	1979	930	3.6	5	10	2
756	150	3	4	1979	945	9.3	32	10	2
757	150	3	4	1979	1020	10.6	39	10	2
758	150	3	4	1979	1445	9.1	3	10	2
759	150	3	4	1979	2305	9.1	2	10	2
760	150	3	5	1979	410	9.1	10	10	2
761	150	3	5	1979	502	9.3	11	10	2
762	150	3	5	1979	517	9.2	3	10	2
763	150	3	5	1979	520	9.2	1	10	2
764	150	3	5	1979	530	9.2	3	10	2
765	150	3	5	1979	537	9.2	3	10	2
766	150	3	5	1979	542	9.2	3	10	2
767	150	3	5	1979	550	9.2	3	10	2
768	150	3	5	1979	555	9.2	3	10	2
769	150	3	5	1979	603	9.2	3	10	2
770	150	3	5	1979	607	9.2	3	10	2
771	150	3	5	1979	616	9.2	3	10	2
772	150	3	5	1979	620	9.2	3	10	2
773	150	3	5	1979	630	9.2	3	10	2
774	150	3	5	1979	637	9.2	3	10	2
775	150	3	5	1979	642	9.2	3	10	2
776	150	3	5	1979	650	9.2	3	10	2
777	150	3	5	1979	657	9.3	4	10	2
778	150	3	5	1979	703	9.3	3	10	2
779	150	3	5	1979	710	9.3	3	10	2
780	150	3	5	1979	715	9.3	5	10	2
781	150	3	5	1979	828	9.3	21	4	6
782	150	3	8	1979	1245	9.7	2	2	2
783	150	3	8	1979	2130	4.5	5	2	2
784	150	3	8	1979	2145	9.6	6	2	2
785	150	3	8	1979	2150	9.1	2	2	2
786	150	3	8	1979	2202	3.7	3	2	2
787	150	3	8	1979	2207	5.2	10	2	2
788	150	3	8	1979	2218	9.5	5	2	2
789	150	3	9	1979	350	3.3	3	2	2
790	150	3	9	1979	405	4.5	3	2	2
791	150	3	9	1979	520	3.3	11	2	2
792	150	3	9	1979	1114	5.8	1	8	5
793	150	3	10	1979	1900	5.0	1	8	5
794	150	3	11	1979	2045	4.8	2	8	5
795	150	3	11	1979	2100	4.8	1	8	5
796	150	3	12	1979	1715	5.8	15	8	5
797	150	3	13	1979	840	9.3	3	8	5
798	150	3	13	1979	950	4.2	5	8	5
799	150	3	13	1979	1435	4.6	2	8	5
800	150	3	18	1979	745	9.2	7	12	4
801	150	3	18	1979	955	9.2	2	12	4
802	150	3	18	1979	1108	5.6	2	12	4
803	150	3	20	1979	715	3.0	120	3	6
804	150	3	23	1979	650	9.4	7	3	6

SOURCE=DATA BASE 11

OBS	PLANT	MONTH	DAY	YEAR	TIME	PH	DURATION	RCODE	NCODE
805	150	3	23	1979	805	4.2	3	3	6
806	150	3	23	1979	945	5.0	2	3	6
807	150	3	24	1979	13	5.4	1	3	6
808	150	3	24	1979	850	9.1	4	1	1
809	150	3	27	1979	716	9.1	2	8	5
810	150	3	27	1979	1155	9.1	3	8	5
811	150	3	30	1979	750	9.3	28	1	1
812	150	3	30	1979	900	9.2	27	1	1
813	150	3	31	1979	715	9.3	13	1	1
814	150	3	31	1979	1305	9.1	2	1	1
815	150	3	31	1979	2015	9.3	13	1	1
816	150	3	31	1979	2115	5.0	10	1	1
817	150	4	1	1979	740	9.1	10	1	1
818	150	4	4	1979	1325	3.4	42	3	6
819	150	4	5	1979	750	2.6	24	1	1
820	150	4	5	1979	1450	3.9	14	1	1
821	150	4	7	1979	1650	9.1	9	2	2
822	150	4	7	1979	2050	9.1	37	2	2
823	150	4	15	1979	1030	4.3	3	2	2
824	150	4	16	1979	2110	9.1	6	2	2
825	150	4	16	1979	2130	9.1	2	2	2
826	150	4	16	1979	2315	4.3	1	2	2
827	150	4	16	1979	2320	4.2	5	2	2
828	150	4	17	1979	905	9.1	5	8	5
829	150	4	19	1979	905	9.1	5	2	2
830	150	4	19	1979	915	9.1	2	2	2
831	150	4	19	1979	917	9.3	8	2	2
832	150	4	26	1979	715	5.7	12	1	1
833	150	4	26	1979	940	5.3	1	4	6
834	150	4	29	1979	1505	4.8	12	12	4
835	150	5	7	1979	1100	3.8	7	2	2
836	150	5	9	1979	1445	5.7	5	7	6
837	150	5	9	1979	1550	9.9	13	2	2
838	150	5	9	1979	2130	3.7	11	2	2
839	150	5	9	1979	2157	3.9	9	2	2
840	150	5	10	1979	1325	4.4	3	2	2
841	150	5	12	1979	1915	10.9	45	3	6
842	150	5	17	1979	940	9.1	4	3	6
843	150	5	17	1979	1152	9.2	20	3	6
844	150	5	19	1979	850	9.1	4	1	1
845	150	5	19	1979	1130	9.1	15	2	2
846	150	5	25	1979	850	10.5	9	1	1
847	150	5	28	1979	1057	9.1	1	1	1
848	150	5	30	1979	850	10.8	13	1	1
849	150	5	31	1979	215	3.0	16	1	1
850	150	5	31	1979	630	9.2	4	10	1
851	150	5	31	1979	718	9.2	7	10	1
852	150	5	31	1979	755	9.4	15	10	1
853	150	6	2	1979	949	10.3	10	1	1
854	150	6	2	1979	1653	10.6	47	1	1
855	150	6	4	1979	424	2.7	57	1	1
856	150	6	4	1979	900	3.3	15	1	1
857	150	6	6	1979	1253	10.2	8	1	1
858	150	6	7	1979	124	3.9	12	10	5

SOURCE=DATA BASE II

OBS	PLANT	MONTH	DAY	YEAR	TIME	PH	DURATION	RCODE	NCODE
859	150	6	13	1979	1420	9.1	8	2	2
860	150	6	15	1979	710	9.2	12	1	1
861	150	6	15	1979	830	5.6	2	2	2
862	150	6	15	1979	838	4.0	58	2	2
863	150	6	15	1979	1027	4.1	35	2	2
864	150	6	16	1979	1155	9.2	3	11	4
865	150	6	18	1979	945	3.5	10	2	2
866	150	6	18	1979	1015	2.7	22	2	2
867	150	6	18	1979	1047	4.7	2	2	2
868	150	6	18	1979	1320	3.3	10	2	2
869	150	6	18	1979	1425	5.2	3	2	2
870	150	6	18	1979	1915	3.6	12	8	5
871	150	6	18	1979	2045	3.5	210	8	5
872	150	6	19	1979	727	4.9	3	8	5
873	150	6	19	1979	1100	3.4	15	8	5
874	150	6	19	1979	1830	3.5	40	8	5
875	150	6	20	1979	915	9.1	11	2	2
876	150	6	20	1979	1318	9.1	1	2	2
877	150	6	21	1979	1112	9.1	1	2	2
878	150	6	21	1979	1545	9.1	4	2	2
879	150	6	26	1979	1240	9.1	3	8	5
880	491	6	28	1978	640	4.6	15	3	6
881	491	6	28	1978	1735	9.8	45	7	6
882	491	6	29	1978	700	5.6	45	3	6
883	491	7	5	1978	1850	3.0	60	10	1
884	491	7	5	1978	1950	10.0	60	10	1
885	491	7	10	1978	2200	5.2	60	3	6
886	491	7	15	1978	2030	10.0	30	3	6
887	491	7	15	1978	2325	10.0	15	3	6
888	491	7	16	1978	215	10.0	10	3	6
889	491	7	16	1978	250	10.0	5	3	6
890	491	7	16	1978	645	4.9	23	3	6
891	491	7	16	1978	708	10.0	22	3	6
892	491	7	20	1978	930	1.8	10	7	6
893	491	7	20	1978	1645	0.5	45	10	1
894	491	7	22	1978	1930	10.0	10	3	6
895	491	8	4	1978	2325	5.7	5	8	5
896	491	8	4	1978	2345	5.7	5	4	6
897	491	8	8	1978	720	10.0	5	7	6
898	491	8	25	1978	230	10.0	30	3	6
899	491	9	8	1978	1550	5.4	15	4	6
900	491	9	14	1978	720	5.9	2	8	5
901	491	9	18	1978	700	5.9	2	4	6
902	491	9	21	1978	1330	5.9	2	3	6
903	491	9	21	1978	1630	5.5	2	3	6
904	491	9	21	1978	1830	5.4	2	3	6
905	491	9	22	1978	2330	4.5	10	4	6
906	491	9	24	1978	1945	10.0	2	4	6
907	491	9	25	1978	1950	4.4	2	3	6
908	491	9	25	1978	2000	4.8	2	3	6
909	491	9	25	1978	2015	2.5	2	3	6
910	491	9	25	1978	2020	5.5	2	3	6
911	491	9	25	1978	2120	5.3	10	3	6
912	491	9	28	1978	710	5.4	2	4	6

SOURCE DATA BASE II

OBS	PLANT	MONTH	DAY	YEAR	TIME	PH	DURATION	RCODE	NCODE
913	491	9	28	1978	730	5.0	2	4	6
914	491	9	28	1978	925	4.1	2	3	6
915	491	9	29	1978	910	5.0	2	7	6
916	491	10	2	1978	745	0.1	2	3	6
917	491	10	2	1978	730	3.6	2	3	6
918	491	10	2	1978	1610	4.3	2	3	6
919	491	10	3	1978	900	0.1	2	7	6
920	491	10	3	1978	910	1.4	2	7	6
921	491	10	3	1978	1500	3.4	2	7	6
922	491	10	3	1978	2100	3.6	2	7	6
923	491	10	3	1978	2200	5.5	2	3	6
924	491	10	4	1978	20	4.9	2	4	6
925	491	10	4	1978	25	5.3	2	4	6
926	491	10	4	1978	330	9.2	4	4	6
927	491	10	4	1978	415	9.1	2	3	6
928	491	10	4	1978	420	5.9	2	3	6
929	491	10	4	1978	630	5.5	2	3	6
930	491	10	4	1978	730	2.7	2	3	6
931	491	10	7	1978	1945	1.0	5	3	6
932	491	10	7	1978	1950	3.0	5	3	6
933	491	10	7	1978	2045	4.8	20	3	6
934	491	10	7	1978	2200	3.7	20	3	6
935	491	10	7	1978	2230	2.4	10	3	6
936	491	10	7	1978	2245	4.5	2	3	6
937	491	10	7	1978	2300	2.0	2	3	6
938	491	10	7	1978	2310	4.3	2	3	6
939	491	10	8	1978	100	5.5	80	3	6
940	491	10	8	1978	100	3.4	3	3	6
941	491	10	8	1978	100	4.2	4	3	6
942	491	10	8	1978	100	4.4	2	3	6
943	491	10	8	1978	100	4.8	4	3	6
944	491	10	8	1978	100	5.0	18	3	6
945	491	10	10	1978	845	1.0	20	3	6
946	491	10	10	1978	910	5.4	20	3	6
947	491	10	10	1978	2320	4.3	2	3	6
948	491	10	11	1978	1100	4.8	10	10	1
949	491	10	11	1978	1110	10.0	20	2	2
950	491	10	18	1978	115	4.4	4	7	6
951	491	10	18	1978	350	5.5	5	7	6
952	491	10	18	1978	445	0.0	45	7	6
953	491	10	26	1978	1215	5.0	5	3	6
954	491	11	14	1978	2340	4.3	20	7	6
955	491	12	1	1978	1945	3.2	2	3	6
956	491	12	2	1978	515	5.1	2	3	6
957	491	12	5	1978	940	5.6	180	2	2
958	491	12	5	1978	1250	4.9	2	4	6
959	491	12	5	1978	1310	3.9	2	4	6
960	491	12	5	1978	1312	9.6	2	4	6
961	491	12	6	1978	945	5.0	2	4	6
962	491	12	6	1978	950	5.0	2	4	6
963	491	12	9	1978	800	1.0	960	7	6
964	491	12	10	1978	1120	3.4	60	7	6
965	491	12	10	1978	1245	1.0	1200	7	6
966	491	12	11	1978	830	4.3	20	7	6

SOURCE=DATA BASE II

OBS	PLANT	MONTH	DAY	YEAR	TIME	PH	DURATION	RCODE	NCODE
967	491	12	11	1978	850	10.0	5	7	6
968	491	12	11	1978	935	5.5	5	7	6
969	491	12	11	1978	945	10.0	5	7	6
970	491	12	11	1978	950	5.6	5	7	6
971	491	12	11	1978	1110	9.1	1	7	6
972	491	12	11	1978	1135	4.6	5	7	6
973	491	12	11	1978	1142	4.7	5	7	6
974	491	12	11	1978	1200	4.8	10	7	6
975	491	12	11	1978	1215	5.6	5	7	6
976	491	12	11	1978	1230	5.9	5	7	6
977	491	12	11	1978	1250	9.7	30	7	6
978	491	12	11	1978	1340	4.6	5	7	6
979	491	12	11	1978	1420	4.6	10	7	6
980	491	12	11	1978	2031	3.6	1	7	6
981	491	12	11	1978	2033	0.3	3	7	6
982	491	12	11	1978	2040	2.8	5	7	6
983	491	12	11	1978	2047	4.0	5	7	6
984	491	1	13	1979	1500	2.4	10	4	6
985	491	1	14	1979	1800	5.4	5	4	6
986	491	1	18	1979	1340	4.6	5	4	6
987	491	1	19	1979	1740	0.0	30	7	6
988	491	1	21	1979	700	3.8	2	4	6
989	491	1	21	1979	1420	4.8	10	2	2
990	491	1	21	1979	1450	5.2	20	2	2
991	491	1	21	1979	2000	9.8	20	2	2
992	491	1	28	1979	425	3.5	10	10	1
993	491	1	28	1979	445	4.8	5	10	1
994	491	1	29	1979	1645	5.6	5	2	2
995	491	1	29	1979	1705	5.7	5	2	2
996	491	1	29	1979	1710	9.7	5	2	2
997	491	2	6	1979	53	5.4	10	10	1
998	491	2	26	1979	945	3.2	25	10	1
999	491	2	26	1979	1050	3.4	40	10	1
1000	491	2	26	1979	1130	1.2	30	10	1
1001	491	2	26	1979	1220	1.7	10	10	1
1002	491	2	26	1979	1230	10.0	20	2	2
1003	491	2	26	1979	1345	10.0	30	2	2
1004	491	3	4	1979	930	2.4	5	7	6
1005	491	3	4	1979	935	9.8	10	7	6
1006	491	3	5	1979	715	5.2	5	7	6
1007	491	3	7	1979	945	5.4	2	4	6
1008	491	3	7	1979	947	10.0	2	4	6
1009	491	3	8	1979	1225	2.0	15	10	1
1010	491	3	12	1979	1015	5.4	5	4	6
1011	491	3	14	1979	2200	5.7	45	12	4
1012	491	3	15	1979	1605	4.5	10	10	5
1013	491	3	16	1979	700	10.0	5	2	2
1014	491	3	16	1979	1740	5.2	5	4	6
1015	491	3	19	1979	1000	10.0	150	3	6
1016	491	3	22	1979	820	10.0	10	2	2
1017	491	3	25	1979	1715	5.8	2	4	6
1018	491	4	6	1979	1700	5.8	5	4	6
1019	491	4	7	1979	900	3.4	5	4	6
1020	491	4	25	1979	712	1.6	15	10	1

SOURCE=DATA BASE II

OBS	PLANT	MONTH	DAY	YEAR	TIME	PH	DURATION	RCODE	NCODE
1021	491	4	25	1979	730	10.0	35	2	2
1022	491	4	25	1979	830	2.2	10	10	5
1023	491	4	25	1979	840	9.6	5	2	2
1024	491	4	25	1979	850	10.0	15	2	2
1025	491	4	25	1979	905	2.4	30	10	5
1026	491	4	25	1979	935	10.0	90	2	2
1027	491	4	25	1979	1305	9.8	15	2	2
1028	491	4	25	1979	1545	3.0	30	10	1
1029	491	6	14	1979	1000	9.2	30	2	2
1030	491	7	21	1979	2020	3.5	45	10	1
1031	586	12	7	1978	1215	4.8	1	3	6
1032	586	12	12	1978	1230	3.7	2	3	6
1033	586	2	14	1979	2150	5.6	1	4	6
1034	586	3	15	1979	2200	5.7	660	8	5
1035	586	3	18	1979	2100	5.9	240	8	5
1036	586	4	8	1979	1800	5.9	1230	3	6
1037	586	4	9	1979	1800	5.6	1320	3	6
1038	586	5	24	1979	1400	9.1	100	4	6
1039	586	6	19	1979	1345	5.2	1200	4	6
1040	586	6	22	1979	645	10.0	10	4	6
1041	586	6	22	1979	700	0.0	5	4	6
1042	586	6	22	1979	900	5.6	1440	3	6
1043	664	1	3	1979	1045	9.4	1	4	6
1044	664	1	3	1979	1050	4.4	1	10	1
1045	664	1	4	1979	2130	4.2	1	4	6
1046	664	1	4	1979	2145	4.5	1	4	6
1047	664	1	4	1979	2150	4.7	8	4	6
1048	664	1	4	1979	2230	5.8	1	4	6
1049	664	1	8	1979	1135	9.5	5	2	2
1050	664	1	10	1979	2250	3.7	1	4	6
1051	664	1	11	1979	1050	9.1	1	2	2
1052	664	1	11	1979	1120	9.1	1	2	2
1053	664	1	11	1979	1345	9.6	2	2	2
1054	664	1	12	1979	910	9.4	5	4	6
1055	664	1	15	1979	1245	9.5	1	4	6
1056	664	1	19	1979	1830	4.3	2	3	6
1057	664	1	19	1979	1840	4.0	2	3	6
1058	664	1	19	1979	1900	2.6	5	3	6
1059	664	1	19	1979	1905	1.9	10	3	6
1060	664	1	19	1979	1935	2.5	3	3	6
1061	664	1	19	1979	1945	9.2	1	3	6
1062	664	1	19	1979	1950	13.4	1	3	6
1063	664	1	19	1979	2000	14.0	1	3	6
1064	664	1	19	1979	2045	14.0	25	10	1
1065	664	1	19	1979	2110	0.0	5	10	1
1066	664	1	19	1979	2115	12.0	10	10	1
1067	664	1	19	1979	2125	0.0	35	10	1
1068	664	1	19	1979	2210	0.0	5	10	1
1069	664	1	19	1979	2215	14.0	1	10	1
1070	664	1	19	1979	2216	0.0	5	10	1
1071	664	1	19	1979	2221	14.0	1	10	1
1072	664	1	19	1979	2222	0.0	5	10	1
1073	664	1	19	1979	2227	14.0	1	10	1
1074	664	1	19	1979	2245	0.0	10	10	1

SOURCE=DATA BASE II

OBS	PLANT	MONTH	DAY	YEAR	TIME	PH	DURATION	RCODE	NCODE
1075	664	1	19	1979	2300	13.0	20	10	1
1076	664	1	19	1979	2320	0.0	5	10	1
1077	664	1	19	1979	2325	14.0	10	10	1
1078	664	1	20	1979	5	0.0	90	10	1
1079	664	2	5	1979	1640	9.1	2	8	5
1080	664	2	27	1979	1225	9.2	1	4	6
1081	664	2	27	1979	1235	12.7	1	4	6
1082	664	2	27	1979	1240	10.2	2	4	6
1083	664	2	27	1979	1245	10.1	2	4	6
1084	664	3	1	1979	1030	9.5	2	3	6
1085	664	3	1	1979	1915	9.4	5	3	6
1086	664	3	28	1979	1135	0.0	5	7	6
1087	664	3	29	1979	1400	4.5	2	4	6
1088	664	5	9	1979	1210	4.3	2	10	1
1089	664	5	27	1979	1400	10.6	10	10	1
1090	664	5	31	1979	2300	9.2	1	4	6
1091	664	6	11	1979	930	0.0	270	3	6
1092	664	7	15	1979	705	5.1	10	2	2
1093	664	7	15	1979	750	5.2	3	2	2
1094	664	7	15	1979	800	5.8	1	2	2
1095	782	8	13	1978	1500	0.0	1260	7	6
1096	782	8	21	1978	1100	5.6	15	11	4
1097	782	8	21	1978	1500	5.8	25	11	4
1098	782	8	21	1978	1815	5.5	95	11	4
1099	782	8	30	1978	1230	10.0	510	3	6
1100	782	9	4	1978	2015	3.1	75	12	4
1101	782	9	10	1978	2050	5.5	10	3	6
1102	782	9	11	1978	800	2.7	15	11	4
1103	782	9	11	1978	910	9.2	15	2	2
1104	782	9	22	1978	810	2.3	5	8	5
1105	782	10	12	1978	1345	9.6	90	2	2
1106	782	10	30	1978	1045	10.0	780	7	6
1107	782	10	31	1978	1900	5.7	35	7	6
1108	782	11	15	1978	120	3.0	2	3	6
1109	782	12	14	1978	1900	5.9	15	10	1
1110	782	12	20	1978	1015	2.8	5	8	5
1111	782	12	20	1978	1020	10.0	5	8	5
1112	782	12	20	1978	1025	3.2	2	8	5
1113	782	12	20	1978	1040	10.0	2	8	5
1114	782	1	17	1979	1810	4.7	5	11	4
1115	782	1	26	1979	2145	2.3	2	4	6
1116	782	1	26	1979	2150	9.8	15	4	6
1117	782	1	26	1979	2225	3.8	5	4	6
1118	782	1	27	1979	1510	5.2	130	2	2
1119	782	2	4	1979	2210	1.9	150	10	1
1120	782	2	5	1979	830	9.4	40	3	6
1121	782	2	5	1979	2350	3.4	15	11	4
1122	782	3	3	1979	830	5.8	15	8	5
1123	782	3	16	1979	630	0.0	990	2	2
1124	782	3	17	1979	100	9.9	270	2	2
1125	782	3	17	1979	915	4.8	165	2	2
1126	782	3	17	1979	1330	9.2	20	2	2
1127	782	3	19	1979	1545	2.4	120	11	4
1128	782	3	19	1979	1850	3.7	25	11	4

SOURCE=DATA BASE II

OBS	PLANT	MONTH	DAY	YEAR	TIME	PH	DURATION	RCODE	NCODE
1129	782	3	20	1979	245	10.0	80	2	2
1130	782	3	20	1979	1230	0.0	90	4	6
1131	782	3	21	1979	1830	5.4	120	10	1
1132	782	3	22	1979	1615	0.1	10	4	6
1133	782	3	22	1979	2015	2.8	40	10	1
1134	782	3	22	1979	2130	3.0	30	10	1
1135	782	3	22	1979	2230	2.7	75	10	1
1136	782	3	23	1979	20	2.8	110	10	1
1137	782	4	18	1979	1610	2.4	5	7	6
1138	782	4	18	1979	1615	0.0	540	7	6
1139	782	4	20	1979	1600	9.1	70	2	2
1140	782	4	20	1979	1850	10.0	75	2	2
1141	782	5	2	1979	620	10.0	125	9	4
1142	782	5	8	1979	1830	4.8	75	7	6
1143	782	5	29	1979	1030	9.1	5	8	5
1144	782	6	2	1979	1540	3.8	95	11	4
1145	782	6	2	1979	1735	10.0	75	2	2
1146	782	7	22	1979	1550	9.6	180	3	6
1147	782	7	25	1979	1315	9.5	120	7	6
1148	782	7	27	1979	815	5.1	205	11	4
1149	782	7	30	1979	1145	5.4	15	11	4
1150	786	10	25	1978	30	5.7	1800	6	3
1151	786	11	10	1978	1415	9.2	5	12	4
1152	786	11	10	1978	1420	9.2	2	12	4
1153	786	11	23	1978	1930	5.9	60	2	2
1154	786	11	23	1978	2050	5.7	210	2	2
1155	786	12	16	1978	945	5.9	75	9	4
1156	786	12	17	1978	1500	4.2	10	4	6
1157	786	12	17	1978	2130	5.8	285	3	6
1158	786	1	5	1979	420	5.8	280	6	3
1159	786	1	18	1979	315	5.3	10	2	2
1160	786	2	6	1979	300	9.4	15	2	2
1161	786	2	6	1979	315	9.4	1785	6	3
1162	786	2	8	1979	930	9.2	180	6	3
1163	786	2	10	1979	1400	10.1	5	4	6
1164	786	2	15	1979	1230	3.2	5	4	6
1165	786	2	23	1979	645	10.1	2	4	6
1166	786	3	5	1979	315	5.7	90	3	6
1167	786	3	10	1979	1200	5.9	60	3	6
1168	786	4	24	1979	1800	5.3	825	6	3
1169	786	4	26	1979	405	11.2	5	4	6
1170	786	4	26	1979	410	4.8	5	4	6
1171	786	6	7	1979	2345	5.7	450	6	3
1172	786	6	13	1979	1930	5.7	70	3	6
1173	786	6	23	1979	2015	5.8	20	3	6
1174	786	7	15	1979	2330	4.9	465	6	3
1175	786	7	17	1979	1600	5.6	2	4	6
1176	928	1	16	1979	1555	9.3	10	6	3
1177	928	1	16	1979	1605	9.2	5	6	3
1178	928	1	17	1979	1110	10.0	2	4	6
1179	928	1	17	1979	1120	9.4	2	4	6
1180	928	1	17	1979	1122	0.0	1	4	6
1181	928	1	17	1979	1140	14.0	1	4	6
1182	928	1	17	1979	1141	0.0	1	4	6

SOURCE=DATA BASE II

OBS	PLANT	MONTH	DAY	YEAR	TIME	PH	DURATION	RCODE	NCODE
1183	928	1	17	1979	1200	14.0	1	4	6
1184	928	1	17	1979	1201	0.0	1	4	6
1185	928	1	19	1979	1250	14.0	4	4	6
1186	928	1	24	1979	830	11.0	2	4	6
1187	928	2	16	1979	1220	10.5	1	4	6
1188	928	2	16	1979	1221	0.0	5	4	6
1189	928	2	16	1979	1315	0.0	1	4	6
1190	928	2	20	1979	1300	14.0	4	4	6
1191	928	2	20	1979	1320	14.0	1	4	6
1192	928	2	21	1979	1310	13.2	2	7	6
1193	928	2	24	1979	140	14.0	1	4	6
1194	928	2	24	1979	141	0.0	1	4	6
1195	928	2	24	1979	200	1.8	1	4	6
1196	928	2	26	1979	2120	14.0	2	4	6
1197	928	2	26	1979	2122	0.0	2	4	6
1198	928	2	26	1979	2315	14.0	5	4	6
1199	928	2	26	1979	2320	0.0	5	4	6
1200	928	3	1	1979	940	14.0	10	4	6
1201	928	3	1	1979	1500	2.8	1	4	6
1202	928	3	2	1979	830	14.0	2	4	6
1203	928	3	2	1979	832	0.0	2	4	6
1204	928	3	2	1979	1315	14.0	5	4	6
1205	928	3	2	1979	1320	0.0	5	4	6
1206	928	3	9	1979	1320	14.0	15	4	6
1207	928	3	9	1979	1440	14.0	1	4	6
1208	928	3	9	1979	1455	12.5	1	4	6
1209	928	3	10	1979	930	4.9	14	6	3
1210	928	3	11	1979	815	4.3	1	6	3
1211	928	3	11	1979	440	0.0	25	6	3
1212	928	3	11	1979	820	13.8	10	6	3
1213	928	3	11	1979	900	5.6	20	6	3
1214	928	3	11	1979	1010	0.0	20	6	3
1215	928	3	11	1979	1200	5.6	840	6	3
1216	928	3	21	1979	1345	13.0	2	7	6
1217	928	3	21	1979	2015	4.9	2	4	6
1218	928	3	22	1979	1415	3.0	5	6	3
1219	928	3	23	1979	2250	0.0	15	6	3
1220	928	4	24	1979	940	0.0	1	4	6
1221	928	4	29	1979	920	4.8	1	4	6
1222	928	5	1	1979	1250	12.5	1	4	6
1223	928	5	1	1979	1251	0.0	10	4	6
1224	928	5	1	1979	1330	0.5	1	4	6
1225	928	5	4	1979	920	0.0	15	4	6
1226	928	5	10	1979	805	5.6	2	4	6
1227	928	5	10	1979	807	10.2	2	4	6
1228	928	5	17	1979	520	13.8	160	3	6
1229	928	5	18	1979	810	13.8	280	3	6
1230	928	5	18	1979	1250	0.0	10	4	6
1231	928	5	20	1979	1100	13.1	1	6	3
1232	928	5	20	1979	1101	0.0	10	6	3
1233	928	5	20	1979	1111	13.8	2	6	3
1234	928	5	23	1979	800	0.0	2	4	6
1235	928	5	23	1979	802	13.5	2	4	6
1236	928	6	1	1979	1315	0.5	2	4	6

SOURCE=DATA BASE II

OBS	PLANT	MONTH	DAY	YEAR	TIME	PH	DURATION	RCODE	NCODE
1237	928	6	1	1979	1320	2.0	1	4	6
1238	928	6	8	1979	845	0.0	5	4	6
1239	928	6	10	1979	1650	4.0	2	3	6
1240	928	6	12	1979	50	0.0	165	3	6
1241	928	6	12	1979	1350	0.0	5	3	6
1242	928	6	12	1979	1425	0.0	5	3	6
1243	928	6	12	1979	1445	2.8	5	3	6
1244	928	6	13	1979	410	1.0	240	3	6
1245	928	6	13	1979	1045	0.0	240	3	6
1246	928	6	14	1979	540	1.8	2	3	6
1247	928	6	14	1979	805	0.0	1	3	6
1248	928	6	14	1979	820	0.0	1	3	6
1249	928	6	14	1979	825	0.0	1	3	6
1250	928	6	14	1979	905	0.0	1	3	6
1251	928	6	15	1979	840	11.2	1	4	6
1252	928	6	15	1979	850	9.2	1	4	6
1253	928	6	15	1979	905	12.5	1	4	6
1254	928	6	15	1979	1320	0.0	5	4	6
1255	928	6	15	1979	2145	3.7	675	6	3
1256	928	6	16	1979	1145	3.7	625	6	3
1257	928	6	26	1979	1030	13.0	8	4	6
1258	928	6	26	1979	1100	4.0	1	4	6
1259	928	6	26	1979	1130	3.6	1	4	6
1260	928	6	26	1979	1315	13.0	2	4	6
1261	928	6	26	1979	1335	11.8	1	4	6
1262	928	6	26	1979	1410	12.6	1	4	6
1263	928	6	29	1979	635	4.0	10	4	6
1264	928	7	3	1979	545	13.4	1	4	6
1265	928	7	3	1979	546	3.4	1	4	6
1266	928	7	3	1979	605	3.8	1	4	6
1267	928	7	3	1979	606	13.2	1	4	6
1268	928	7	3	1979	647	12.4	1	4	6
1269	928	7	3	1979	648	4.0	1	4	6
1270	928	7	3	1979	705	1.6	1	4	6
1271	928	7	3	1979	706	11.0	1	4	6
1272	928	7	3	1979	750	13.4	10	4	6
1273	928	7	3	1979	800	4.0	7	4	6
1274	928	7	3	1979	830	13.4	1	4	6
1275	928	7	3	1979	831	3.0	1	4	6
1276	928	7	5	1979	935	0.0	1	4	6
1277	928	7	5	1979	945	0.0	1	4	6
1278	928	7	5	1979	1020	0.9	1	4	6
1279	928	7	5	1979	1021	11.0	1	4	6
1280	928	7	5	1979	1040	13.8	1	4	6
1281	928	7	5	1979	1059	0.0	1	4	6
1282	928	7	5	1979	1100	13.5	1	4	6
1283	928	7	5	1979	1101	0.0	1	4	6
1284	928	7	11	1979	945	5.6	75	4	6
1285	928	7	11	1979	1105	0.0	1	4	6
1286	928	7	11	1979	1310	4.0	20	4	6
1287	928	7	13	1979	635	5.1	10	2	2
1288	928	7	13	1979	655	4.6	5	2	2
1289	928	7	17	1979	835	0.0	1	4	6
1290	928	7	17	1979	855	0.0	1	4	6

---------- SOURCE=DATA BASE II ----------

OBS	PLANT	MONTH	DAY	YEAR	TIME	PH	DURATION	RCODE	NCODE
1291	928	7	18	1979	940	0.0	1	4	6
1292	928	7	18	1979	950	0.0	1	4	6
1293	928	7	18	1979	1320	0.0	1	4	6
1294	928	7	18	1979	1321	13.0	6	4	6
1295	928	7	20	1979	1300	14.0	2	4	6
1296	928	7	24	1979	1500	0.0	20	6	3
1297	928	7	24	1979	1750	0.0	2	6	3
1298	928	7	25	1979	910	0.0	1	4	6
1299	928	7	25	1979	920	11.6	3	4	6
1300	928	7	26	1979	1345	0.0	6	4	6
1301	928	7	26	1979	1351	13.0	6	4	6
1302	928	7	26	1979	1435	0.9	1	6	3
1303	928	7	26	1979	1436	10.5	1	4	6
1304	928	7	26	1979	1515	0.0	1	4	6
1305	928	7	26	1979	1516	14.0	1	4	6
1306	928	7	26	1979	1545	14.0	1	4	6
1307	928	7	27	1979	1315	0.0	8	4	6
1308	928	7	27	1979	1323	10.2	7	4	6
1309	928	7	27	1979	1348	0.0	2	4	6
1310	928	7	27	1979	1350	13.8	2	4	6
1311	928	7	31	1979	800	0.0	30	4	6
1312	928	8	1	1979	1045	0.0	15	4	6
1313	928	8	1	1979	2200	5.0	25	6	3
1314	928	8	2	1979	805	9.3	5	4	6
1315	928	8	2	1979	815	9.3	2	4	6
1316	928	8	2	1979	835	13.5	3	4	6
1317	928	8	2	1979	840	13.0	1	4	6
1318	928	8	2	1979	841	0.0	10	4	6
1319	928	8	2	1979	1010	13.0	1	4	6
1320	928	8	5	1979	930	5.5	25	6	3
1321	928	8	6	1979	829	0.5	1	4	6
1322	928	8	6	1979	830	13.0	15	4	6
1323	928	8	6	1979	1005	11.0	1	4	6
1324	928	8	7	1979	845	13.0	25	4	6
1325	928	8	7	1979	940	14.0	2	4	6
1326	928	8	7	1979	942	0.9	1	4	6
1327	928	8	8	1979	845	14.0	5	4	6
1328	928	8	8	1979	925	9.4	1	4	6
1329	928	8	9	1979	850	14.0	3	4	6
1330	928	8	9	1979	914	0.0	1	4	6
1331	928	8	9	1979	940	11.5	5	4	6
1332	928	8	10	1979	1310	12.1	5	4	6
1333	928	8	10	1979	1340	10.3	1	4	6
1334	928	8	14	1979	1240	14.0	5	4	6
1335	928	8	14	1979	1250	14.0	2	4	6
1336	928	8	15	1979	832	12.8	4	4	6
1337	928	8	15	1979	836	4.5	1	4	6
1338	928	8	15	1979	855	11.2	1	4	6
1339	928	8	16	1979	1205	5.3	1	4	6
1340	928	8	16	1979	1206	12.8	15	4	6
1341	928	8	16	1979	1230	4.7	1	4	6
1342	928	8	16	1979	1231	11.9	1	4	6
1343	928	8	18	1979	0	5.6	1800	4	6
1344	928	8	21	1979	1045	5.4	10	3	6

SOURCE=DATA BASE II

OBS	PLANT	MONTH	DAY	YEAR	TIME	PH	DURATION	RCODE	NCODE
1345	928	8	21	1979	1245	0.0	2	4	6
1346	928	8	21	1979	1247	14.0	2	4	6
1347	928	8	21	1979	1325	2.8	2	4	6
1348	928	8	22	1979	805	2.3	1	4	6
1349	928	8	22	1979	806	14.0	5	4	6
1350	928	8	22	1979	1050	13.4	1	3	6
1351	928	8	22	1979	1051	5.0	5	3	6
1352	928	8	22	1979	1339	1.0	1	4	6
1353	928	8	22	1979	1340	14.0	2	4	6
1354	928	8	24	1979	840	0.0	2	4	6
1355	928	8	24	1979	842	14.0	2	4	6
1356	928	8	24	1979	910	0.0	5	4	6
1357	928	8	24	1979	915	14.0	3	4	6
1358	928	8	24	1979	1240	4.7	5	3	6
1359	928	8	24	1979	1340	0.0	30	3	6
1360	928	8	27	1979	1505	0.0	40	3	6
1361	928	8	27	1979	1625	4.7	15	3	6
1362	928	8	28	1979	850	0.0	5	4	6
1363	928	8	31	1979	830	0.6	1	4	6
1364	928	8	31	1979	840	10.8	8	4	6
1365	928	8	31	1979	920	12.6	1	4	6

UNITED STATES
ENVIRONMENTAL PROTECTION AGENCY
BEFORE THE ADMINISTRATOR

In Re:

pH Effluent Limitation Guidelines and
Standards of Performance for Certain
Manufacturing Point Source Categories

PETITION FOR REVIEW AND REVISION

Submitted herewith is a report entitled "pH Control of Industrial Effluents" prepared by Centec Consultants, Inc. ("Centec Report"). The Centec Report demonstrates conclusively the impracticality of the current regulations and policies of the Environmental Protection Agency concerning the control of pH in effluent discharge for certain point source categories. Petitioners hereby request the Agency to promptly review these regulations and policies and amend them so as to establish practical and realistic parameters for pH control.

This petition and evidence presented in the Centec Report establish the need for the revision of certain of EPA's pH effluent limitations guidelines for existing plants and standards of performance for new sources promulgated under the authority of Sections 301(b), 304(b) and 306(b), respectively, of the Federal

Water Pollution Control Act ("the Act"), 33 U.S.C. §§ 1311(b), 1314(b) and 1316(b). This petition is submitted under authority of Sections 301(b), 304(b) and 306(b) of the Act and 5 U.S.C. § 553(e) which grants to "an interested person the right to petition for the issuance, amendment or repeal of a rule." Petitioners own and/or operate industrial plants which are point sources subject to these regulations and are therefore "interested persons" within the meaning of this section.

This petition is submitted pursuant to the procedures detailed by the United States Court of Appeals for the District of Columbia in Oljato Chapter of the Navajo Tribe v. Train, 515 F.2d 654, 666 (D.C. Cir. 1975) as the most direct and expedient method of bringing Petitioners' findings and conclusions before the Agency and requesting the Agency to initiate the necessary regulatory revisions mandated thereby. See also Simon v. Eastern Kentucky Welfare Rights Organization, 426 U.S. 26 (1975)(dissenting opinion of Brennan, J.); Save the Bay, Inc. v. Administrator of EPA, 556 F.2d 1282 (5th Cir. 1977); Ethyl Corp. v. Environmental Protection Agency, 541 F.2d 1 (D.C. Cir. 1976).

Specifically, Petitioners hereby petition the Agency to promptly take the following actions:

(1) Rescind the Agency's internal policy limiting the pH of effluent discharge to the range 6.0 to 9.0 on a continuous basis for industrial point source categories involving the manufacture, or use in the manufacturing process, of strong acids or substantial quantities of bases, and

(2) Revise the pH parameters in effluent limitations guidelines for existing plants and standards of performance for new sources, or issue new parameters where no regulations are currently effective, for point source categories involving the manufacture, or use in the manufacturing process, of strong acids or substantial quantities of bases, to permit excursions outside the pH 6 to 9 range for a total period of at least one percent of a month,[1/] with excursions below pH 3.5 or above pH 11 being limited to 15 minutes per excursion. These categories and subcategories (hereinafter referred to as "the specified subcategories") include but are not limited to the following:

A. Existing Guidelines

1. Inorganic Chemicals (40 C.F.R. Part 415):

   Subpart D (Calcium Chloride)

   Subpart F (Chlorine and Sodium or Potassium Hydroxide)

2. Fertilizer Manufacturing (40 C.F.R. Part 418):

   Subpart B (Ammonia)

   Subpart C (Urea)

   Subpart D (Ammonium Nitrate)

3. Iron and Steel Manufacturing (40 C.F.R. Part 420)

1/ Certain types of plants may require a greater than 1% excursion allowance. The Phosphate fertilizer manufacturing category, for example, is not addressed by this Petition. That industry has indicated in the past that it could not meet a 99% monthly compliance requirement. Some plants in the categories covered by this petition may not be able to meet that level of performance because of problems unique to that plant. See p. 22 below.

4. Non-Ferrous Metals Manufacturing (40 C.F.R. Part 421):

   Subpart A (Bauxite Refining);

   Subpart B (Primary Aluminum Smelting)

   Subpart C (Secondary Aluminum Smelting)

5. Phosphate Manufacturing (40 C.F.R. Part 422)

   Subpart A (Phosphorous Production)

   Subpart B (Phosphorous Consuming)

B. Categories Without Regulations But <u>Subject to Agency "Policy" on pH</u>

1. Inorganic Chemicals Manufacturing, various subparts including:

   Subpart G (Hydrochloric Acid)

   Subpart H (Hydrofluoric Acid)

   Subpart J (Nitric Acid)

   Subpart O (Sodium Carbonate)

   Subpart U (Sulfuric Acid)

   Subpart V (Titanium Dioxide)

   Subpart W (Aluminum Fluoride Production)

   Subpart Y (Ammonium Hydroxide)

   Subpart AP (Hydrogen Cyanide)

   Subpart AV (Strong Nitric Acid)

   Subpart BF (Sodium Silicofluoride Production)

2. Organic Chemical Manufacturing (40 C.F.R. Part 414)

   Subparts covering plants manufacturing, or using in the manufacturing process, strong acids or bases.

3. Fertilizer Manufacturing (40 C.F.R. Part 418)

   Subpart E (Nitric Acid)

The necessity for these Agency actions is documented in the Centec Report which extensively analyzes the operating histories of the efforts of many different types of plants to achieve pH control. The purpose of this petition is to summarize and place in perspective the technical data and other information contained in the Centec Report.

I. PETITIONERS AND THEIR INTEREST

Petitioners herein are:

Allied Chemical Corporation

American Cyanamid Co.

BASF Corporation

C F Industries, Inc.

E. I. du Pont de Nemours & Co.

FMC Corporation

Hooker Chemical Corporation

Kaiser Aluminum & Chemical Corporation

Olin Corporation

Union Carbide Corporation

United States Steel Corporation

These companies produce a diverse range of products including organic and inorganic chemicals, fertilizers, iron and steel, non-ferrous metals and phosphates. Each is vitally affected by the Agency's regulations and policy limiting pH in effluent discharge, as it owns or operates one or more plants which discharge effluent pursuant to a National Pollution Discharge Elimination

System (NPDES) permit containing pH parameters. Petitioners' common interest in filing this petition is in presenting to the Agency the new data and other new information contained in the Centec Report demonstrating the impracticability of certain industry subcategories complying with current EPA regulations and policy requiring that pH be maintained within the narrow 6.0 - 9.0 range 100 percent of the time.

II. BACKGROUND

A. pH As A Pollutant Parameter

pH is a value which measures the acid (concentration of H+ ions) and alkaline (concentration of OH- ions) content of solutions. From a neutral pH of 7 the addition of hydrogen ions will lower pH while the addition of hydroxyl ions will raise it. Since pH measurement is logarithmic, at high or low pH values, i.e., high concentrations of H+ or OH- ions, the addition of relatively large amounts of acid or base is required to change pH, while at pH values close to neutral the addition of extremely small amounts of acid or base will produce large changes in pH. It is this latter characteristic of pH that makes its continuous regulation within a narrow range around the neutral point of 7 very difficult. (Centec Report §§ 2.1, 2.3.)

B. The Initial pH Regulations

The 1972 amendments to the Act, which extensively revised the mechanism under which all effluent discharges from

industrial plants and municipalities are regulated, required achievement by all point sources of Best Practicable Control Technology (BPT) by 1977 and Best Available Technology (BAT) by 1983. When effluent guidelines for BPT were first proposed in 1974, the almost universal standard was to maintain control of pH between 6.0 to 9.0 standard units.

In the absence of actual experience in maintaining pH within such a narrow range, this requirement was generally accepted by industry, and equipment designed to control pH at this level was installed by many major corporations, including several of the Petitioners. Previous experience with pH control had been with grab and/or composite samples; essentially no data on continuous monitoring was then available. As these systems began operating with continuous pH monitoring, however, it became clear that many factors not readily apparent from theoretical considerations caused the control of pH between 6 to 9 at all times to be extremely difficult, if not impossible, for some plants.

The effluent guidelines for the fertilizer industry produced the first legal challenge to EPA's pH regulations. The nitric acid regulations promulgated April 8, 1974, included a requirement for control of pH between 6 and 9 on a continuous basis. The industry asked for some modest relief from this requirement. Because of the lack of data on pH control, both the Agency and industry retained consultants to study the technical aspects

of pH control. The industry hired Centec Consultants, Inc. while EPA commissioned Jacobs Engineering to perform a study.

The Centec Report submitted to EPA on June 18, 1976, concluded that it was neither feasible, nor was it desirable from the point of view of resource conservation, to attempt to control pH between 6 and 9 at all times. Centec recommended that nitrogen fertilizer industry pH levels be controlled between 6 to 9 for 99 percent of the time on a long-range average basis and that brief excursions outside of a wider range be permitted.[1/]

The Jacobs Engineering Report also concluded that it is not possible to control pH between 6 and 9 for 100 percent of the time.[2/] On March 25, 1977, EPA revoked the pH regulations for nitric acid and phosphate fertilizer manufacturing.[3/] The Notice of Revocation stated in pertinent part:

1/ The basis for this recommendation was (1) the extremely high cost required to remove most of the last few "blips" of pH outside 6 to 9 in the effluent, (2) an analysis that showed that no significant hydrogen ions would be discharged to the waterway until a pH of 3.5 was reached, (3) the results of studies at du Pont's Haskall laboratories that showed that at a pH of 3.5, fish showed little effect from pH exposure for short periods, and (4) the impossibility of removing all chances of excursions from the pH range of 6 to 9.

Relevant portions of this June 18, 1976 Centec Report and the pH control section of a September 15, 1976 Centec Report analyzing guidelines proposed by EPA for the Urea and Ammonium Nitrate subcategories of the nitrogen fertilzer industry are reproduced as Appendix A to the Centec Report submitted herewith.

2/ Excerpts from this Jacobs Engineering Report dated August 18, 1976 are reproduced as Appendix B to the Centec Report submitted herewith.

3/ 42 Fed. Reg. 16140-16141, a copy of which is reproduced as Appendix C to the Centec Report submitted herewith.

> The information presently available to the Agency indicates that while the better nitric acid plants are able to maintain their effluent discharges within the pH range of 6.0 to 9.0 more than 99.9 percent of the time on a yearly basis, maintaining continuously or 100 percent of the time does not now appear to be economically feasible.

On April 26, 1978, EPA promulgated amended regulations for the Ammonium Nitrate and Urea Subcategories. Despite its recognition in the March 25, 1977 Notice of Revocation of the Nitric Acid and Phosphate fertilizer regulations that maintenance of pH 6.0 to 9.0 on a continuous basis was not "economically feasible", the new regulations contain a requirement that pH be maintained "[w]ithin the range 6.0 to 9.0" (43 Fed. Reg. 17821-17828). This requirement was issued even though the Agency's own recently completed survey demonstrated the inability of fertilizer plants having a discharge to meet the pH 6 to 9 limitation on a continuous basis.[1/]

Although, none of the Agency's development documents supportive of effluent guidelines and standards containing continuous pH 6.0 to 9.0 requirements have offered technical support for the requirement, Agency policy has been clear. Effluent guidelines have consistently contained a 6.0 to 9.0

1/ Of the 17 plants surveyed which continuously monitored their effluent, only four reported no pH excursions. Three of those plants had no discharge of any pollutants and thus, by definition, no pH control problem. The fourth initially reported that it was meeting the pH 6 to 9 requirement on a continuous basis. This was inaccurate, however, and was clarified by a letter from the plant to the Agency. It should be noted that this plant has the most advanced technology the Agency has identified as available.

continuous pH requirement. For example, the recently promulgated fertilizer regulations contain such a requirement. Likewise, Agency policy in the absence of guidelines has been clearly enunciated. A July 15, 1976 memorandum to "Regional Enforcement Directors NPDES Approved State" from Jeffrey G. Miller, Deputy Assistant Administrator for Water Enforcement re "pH Limitation in NPDES Permits" states:

> Generally, our position has been that for BPCTCA, the pH limitations should be 6.0 to 9.0, unless of course, relevant effluent guidelines limitations for pH are different or else, water quality standards are more restrictive.

This policy has been followed in issuance and enforcement of NPDES permits.[1/] Its support appears limited to a June, 1976 memorandum entitled "Justification for pH Limits in NPDES Permits" prepared by Murray P. Strier, an Agency staff chemist. This memorandum does not even consider (1) the technical justification for a 6.0 to 9.0 standard, (2) the costs of attempting to achieve that standard, (3) the necessity for provision for excursions from the required standard, or (4) the alleged harm to receiving waters from discharge

---

1/ For example, in 1974 EPA issued an NPDES permit containing a pH 6 to 9 100 percent continuous monitoring requirement for the Wurtland, Kentucky, sulfuric acid plant of E. I. du Pont de Nemours and Co., and Region IV threatened to rigidly enforce this permit provision. On October 25, 1977, du Pont filed suit challenging this limitation in the United States Court of Appeals for the Sixth Circuit. This litigation was only recently settled through entry of a stipulated decree providing inter alia that "(a) the pH limitation [of 6.0 to 9.0] shall not be exceeded more frequently than 1% of the time the plant was operating during each month or 10% of any day (24-hour operating period)." E. I. du Pont de Nemours & Co. v. United States Environmental Protection Agency, No. 77-3507 (6th Cir., May, 1978).

of effluent deviating from the required standard. Without any consideration of these issues, the memorandum simply states:

> . . . Therefore, it must be concluded that pH control of industrial waste streams are open to many relatively facile and inexpensive options. (p. 6)

Though this position was recognized by the Agency to be unsound in the case of nitric acid and phosphate fertilizer plants in the March, 1977 Notice of Revocation, it is apparently still being followed.

The Centec Report submitted herewith corroborates with extensive operating data the conclusion of both the June, 1976 Centec Report and the September, 1976 Jacobs Engineering Report. On authority of these studies, maintenance of pH 6.0 to 9.0 on a continuous basis is not feasible for the specified subcategories.

C. The 1977 Amendments

In the 1977 Amendments to the Act, enacted on December 27, 1977, Congress significantly revised the regulatory system for the control of effluent discharges under the Act. The 1972 Act required the adoption of best available technology (BAT) for all point sources by July 1, 1983. Congress, however, was persuaded that this might prove unnecessary and too costly for the control of so-called "conventional pollutants". Accordingly, the 1977 amendments require EPA to develop regulations specifying best conventional pollutant control technology (BCT) for conventional pollutants, including pH.[1/] The Agency is to review existing BAT regulations for conventional

---

1/ Section 304(a)(4) of the Act, as amended.

pollutants and to make any necessary adjustments to effectuate BCT. For 21 major industrial point source categories, this review must be accomplished by July 1, 1980; for all other point source categories, it was to have been completed by March 27, 1978. BCT regulations for these conventional pollutants must be complied with by January 1, 1984.

In developing BCT for classes and categories of point sources, the Agency is directed to make a cost-benefit analysis as well as to consider other factors, including age of equipment, engineering considerations, and process changes. Regulations more stringent than BPT may be issued only if the benefits of such regulation outweigh the incremental costs.[1/] The purpose of this analysis is to limit the control required for conventional pollutants to that achievable at reasonable cost. As discussed below, this level of pH control for the types of plants examined by Centec is maintenance of pH within the range 6.0 to 9.0 for 99 percent of the time on a monthly basis with allowance for excursions of short duration outside the 3.5 to 11.0 range.

III. GROUNDS SUPPORTING THIS PETITION

While Petitioners, and industry generally, have compiled impressive records of pH control, maintenance of effluent discharge within pH 6 to 9 at all times is not feasible for plants which manufacture strong acids or substantial quantities

---

1/ Section 304(b)(4)(B).

of bases or utilize these materials in their manufacturing processes. The Centec Report presents data reflecting the unsuccessful efforts of several plants in the specified subcategories to maintain pH within the Agency's paramaters on a continuous basis. Despite installing highly sophisticated equipment for pH control, the data indicates failure in each instance to eliminate brief excursions from the 6 to 9 range. All available data and information indicate, however, that these brief excursions have no meaningful adverse environmental effect on receiving waters.

A summary discussion of these conclusions, all of which are extensively documented in the Centec Report, is provided below.

A. Maintenance Of pH Within The 6-9 Range At All Times Is Not Feasible With Presently Available Technology

The pH scale within the range of 6 to 9 is very sensitive to the addition of small amounts of acid or base in unbuffered or slightly buffered water. Maintenance of industrial discharge within this range on a continuous basis is extremely difficult for companies which manufacture strong acids or substantial quantities of bases or which use them in their manufacturing processes. (Centec Report §§ 2.1, 2.3.)

Most natural waterways have a high buffering capability which effectively maintains pH near the neutral range even when excess hydrogen or hydroxyl ions are added to it. Since most highly acidic wastewater has had its buffering capacity destroyed, however, this same buffering effect will not be apparent in the

wastewater itself. This factor accentuates the problem of maintaining the pH of effluent discharge within the 6 to 9 range on a continuous basis. (Centec Report §§ 2.2, 2.3.)

Control of pH is essentially a matter of neutralizing the wastewater by addition of base (if acidic) or acid (if basic). Because the makeup of some industrial wastewaters is continually changing, controlling pH requires responding to dynamic conditions. The sensitivity to pH change of wastewater near the neutral range and its generally diminished buffering capability make immediate and precise response to these changing conditions necessary to maintain pH within 6 to 9. (Centec Report § 2.3.)

The most advanced techniques and mechanisms developed to control pH include feedback and feed-forward systems and attenuation tanks or ponds. These systems, which are generally used in varying combinations determined by a particular plant's situation, are discussed in detail in Section 4 of the Centec Report. The efforts of 11 plants in the specified subcategories, representing 18 years of pH control experience, to control pH through use of various combinations of these systems, is discussed in Section 5 of the Centec Report. Though use of these systems has produced very favorable results in terms of reduction of excess hydrogen or hydroxyl ions in the effluent and percent of time in compliance within pH 6 to 9, none of the plants has been able to attain 100 percent compliance with pH 6 to 9 requirements. Even the precise system recommended by EPA's contractor, which has been installed at U.S. Steel's

Pittsburg, California plant, has failed to meet the Agency's requirement. Another of the plants included in the Centec study has installed at great cost a system to divert and recycle effluent emitted from the system that is outside the pH 6 to 9 range. Even with the addition of this system, maintenance of the pH 6 to 9 requirement on a continuous basis has not been achieved.

The reasons for the inability of many plants to maintain effluent discharge within pH 6 to 9 on a continuous basis are discussed in Section 4 of the Centec Report. The problems involved include effluent variability, variability of titration curves, electrode fouling, unstable control, mechanical failure, and operator error. These factors make 100 percent reliability of any pH control system impossible to achieve. Without 100 percent reliability, maintenance of pH within 6 to 9 on a continuous basis is unattainable by plants in the specified subcategories.

Table 6-3 of the Centec Report[1/] summarizes the performance and cost of advanced pH control for various plants. The installed cost of these systems ranges from $60,000 for a single-stage automatic control system to over $4 million (1977 dollars) for a multi-stage system with recycling. Many of the plants achieved outstanding pH control levels, often better than 99 percent on a long-term (yearly) basis. Clearly these plants are

---

1/ Centec Report, p. 156.

operating with an extremely high degree of reliability with little room for improvement in pH control. As would be expected, given the sporadic nature of the factors contributing to pH excursions, monthly averages for time in compliance within the pH 6 to 9 range were at times lower than the yearly averages. Only two of the plants for which monthly compliance data was available consistently achieved better than 99 percent compliance on a monthly basis. Installed costs of these systems were $531,000 and $800,000, respectively.

Generally, the available data indicate that costs rise rapidly as plants attempt to improve pH control past 98 percent of the time on a monthly average basis. In the opinion of Centec, 99 percent compliance with a pH 6 to 9 requirement on a monthly basis can be met by most plants in the specified subcategories with one or two stages of neutralization, combined with attentuation tanks or ponds. Such a level of compliance thus represents the upper limit of effluent reduction achievable by both BPT and BCT. The very substantial capital, land, technical manpower and energy resources required for diversion ponds, redundant systems and other methods of improving control beyond this point would be wasted since a requirement of 99 percent compliance will adequately protect the environment. (Centec Report, p. 7.)

B. The Environmental Benefits Of pH Control Beyond 99 Percent On A Monthly Basis Are Non-Existent

1. Short-Term pH Excursions from the 6.0 to 9.0 Range Typical of Even the Best Controlled Plants Will Not Have A Harmful Effect on the Environment

Though very high or low concentrations of hydrogen ions in water can be harmful to aquatic life under certain conditions, the effect is determined by the magnitude and duration of the exposure. A survey of the available scientific literature indicates that the limits of mortality for various species of fish extend to pH 4 for several hours. This is a much longer time at this pH level than usually experienced in industrial situations. Furthermore, pH is not bioaccumulative, i.e., short-term exposures are not cumulatively harmful. This is in contrast to the long-lasting effects of toxic substances, such as lead or mercury, where small amounts accumulate in the food chain. An extensive literature search reveals no data showing any permanent effect attributable to brief exposures to low pH. The effect of pH above 9 is not as well documented, but it appears that even continuous exposure of pH up to 9.8 is not damaging. (Centec Report § 3.)

The ability of aquatic life to accommodate short-term extreme pH conditions in a stream and the ability of fish to avoid low pH areas which affect only a portion of the stream support the judgment that aquatic life would not be adversely affected by short-term (up to several hours) excursions from the pH range 6 to 9. Available surveys of well-controlled industrial

effluents that experience short-term excursions from pH 6 to 9 show no discernible effect on the environment as a result thereof. (Centec Report § 3.)

2. Controlled Industrial Discharges Represent Inconsequential Sources of pH Change in Receiving Waters

Buffering is the phenomenon by which compounds dissolved in water mitigate the effect on pH of added hydrogen or hydroxyl ions. In unbuffered water the addition of an acid or base results in a proportional increase or decrease of the free hydrogen ions. In buffered water, however, the dissolved compounds already present in the water react in such a way that the pH change is much less than would be the case in an unbuffered solution. (Centec Report § 2.2.)

Because of buffering and rapid dilution, the addition of small quantities of excess hydrogen or hydroxyl ions to natural waterways has only a minimal effect on the pH of the receiving waters. The effect that is apparent is localized in nature and of short duration.

Section 7 of the Centec Report documents effects on receiving water pH of industrial discharges outside the 6 to 9 range. Each case studied involved excursions from the 6 to 9 range much more egregious than typical industrial discharges from a plant with advanced pH control. Nevertheless, in each instance effect on pH of the receiving waters was very localized and of short duration. No environmental harm was evident.

C. EPA's pH Regulations and pH Policy Are Not Consistent With the Act

Centec's analysis of the most advanced methods of pH control and of the actual performance of plants that have installed them leads to the conclusion that no control system exists that is capable of the essentially perfect control that is necessary to maintain a continuously varying industrial discharge within the sensitive pH range of 6 to 9.[1/] Because of inherent limitations of pH control technology, plant upsets, mechanical breakdowns and other factors beyond the control of plant operators, pH cannot be maintained within the 6 to 9 range 100 percent of the time. A failure by the Agency to make allowance for limited excursions from this range in existing and new pH regulations for the designated subcategories would be unrealistic and improper. See, e.g., Marathon Oil Co. v. EPA, 564 F.2d 1253, 1272 (9th Cir. 1977); Tanners Council of America v. Train, 540 F.2d 1188, 1194 (4th Cir. 1976); FMC Corporation v. Train, 539 F.2d 973, 986 (4th Cir. 1976); Essex Chemical Corporation v. Ruckelshaus, 486 F.2d 427, 432 (D.C. Cir. 1973), cert. denied, sub nom Applachian Power Co., et al. v. Environmental Protection Agency, 416 U.S. 969 (1974); Portland Cement Ass'n v. Ruckelshaus, 486 F.2d 375 (D.C. Cir. 1973), cert. denied, 417 U.S. 921 (1974). In the Marathon Oil case, the court was reviewing effluent regulations applicable to offshore oil drilling platforms. The court found that while the standards could be met from 97.5 - 99 percent of

---

1/ Centec Report, p. 6.

the time they could not be met 100 percent of the time because of various upsets. The court stated:

> . . . The issue raised by petitioners is whether a formal "upset provision" must be written into the permits. The EPA has refused to insert an "upset provision" into petitioners' permits, arguing that excursions can be adequately dealt with informally. Petitioners argue that this is not enough: that the permits must formally provide that upsets beyond the control of the permit holder are not violations of the permit standards.
>
> We agree. The Federal Water Pollution Control Act requires point sources of pollution to utilize the "best practicable control technology currently available" prior to 1983. The EPA cannot impose a higher standard without violating the Control Act. And yet the permits as currently written do exactly that. The permits on their face require petitioners to meet the standards 100 percent of the time. But platforms using BPCTCA can only be expected to achieve the effluent standards 97.5 percent of the time in the case of deck drainage and 99 percent of the time in the case of produced water. We, therefore, remand to the EPA with instructions to insert upset provisions into the permits.
>
> It is not an adequate response that the EPA will informally take BPCTCA into account in deciding whether or not to prosecute "violators." First, there is no guarantee that the EPA will choose to exercise this discretion. And once a prosecution is brought, the courts have no authority to dismiss the complaint on the grounds that the permit holder could not have avoided the violation. Cf. Getty Oil Co. v. Ruckelshaus, 467 F.2d 349 (3d Cir. 1972), cert. denied, 409 U.S. 1125, 93 S.Ct. 937, 35 L.Ed.2d 256 (1973). Even if we were to assume that the EPA would decline to prosecute in every case of unavoidable excursion, any concerned citizen would still be free to commence an enforcement action against the "violator" under section 505(a)(1) of the Act. "[T]here is no authorization to block a citizen's suit under section 505 even though the agency believes that the suit should not go forward." Bethlehem Steel Corp. v. Train, 544 F.2d 657, 660 (3d Cir. 1976).
> (564 F.2d at 1272-1273, footnote omitted.)

It is important to note that unlike the situation in the Marathon Oil case, petitioners are not merely seeking an amendment to the Agency's pH regulations to cover plant upsets and mechanical breakdowns. In the 1977 Amendments to the Act, Congress specifically designated pH as a pollutant parameter which should be subject to BCT rather than BAT. It is therefore essential to determine what level of pH control can be achieved consistently at a reasonable cost. Under the Act, both BPT and BCT regulations must reflect a level of performance that can be economically and consistently achieved. See, E. I. du Pont de Nemours & Co. v. Train, 541 F.2d 1018, 1035 (4th Cir. 1976) (remanding BPT and BAT pH regulations), decision on other issues rev'd, 430 U.S. 112 (1977). In numerous regulations, the Agency has recognized that effluent guidelines must be computed by multiplying a long-range average performance figure by a variability factor (e.g., 43 Fed. Reg. 17821 (April 26, 1978) (urea and ammonium nitrate plant regulations)). The Centec Report demonstrates that pH control technology has inherent limitations when applied to certain types of industrial effluent which result in variations in performance. It is therefore necessary to take such variability into account in deriving pH regulations. For unstated reasons, however, EPA has not used that procedure to derive its pH regulations.

While an appropriate pH regulation can be set for a given industrial category or subcategory only after examining the data from a representative number of plants, the Centec

Report indicates that 99 percent compliance on a monthly basis is the maximum performance that can be economically achieved by most plants. Only a few of the plants studied by Centec were achieving that level of performance consistently. Some plants not specifically reviewed by Centec may not be able to achieve that level consistently because of the volume of their discharge, availability of land for attenuation ponds, hydraulic profile or other factors.

Furthermore, all plants will have difficulties in achieving even a 99 percent level of control during periods in which there are severe plant upsets or mechanical breakdowns. pH control systems are only designed to deal with normal variations in influent and are themselves subject to mechanical breakdowns (Centec Report § 4.3). An upset provision therefore is required for those occasions when even exemplary use of BPT or BCT will not avoid an excursion. Marathon Oil Co., supra. In most cases, however, excursions outside the pH range 3.5 to 11 caused by plant upsets should be able to be brought under control within 15 minutes, if necessary by plant shutdown.[1/] An upset provision by itself would thus provide only limited relief from the current 100 percent compliance requirement.

Because the current regulations and policy require a level of performance that cannot be consistently achieved and

---

1/ Some plants may require longer than 15 minutes to shut down. In such cases, it would be unreasonable to limit such excursions to a shorter period than that required to shutdown.

fail to make any provisions for plant upsets, they are not authorized by the Act.

IV. RELIEF REQUESTED BY THIS PETITION FOR REVIEW AND REVISION

This petition requests the Agency to (1) revise its internal policy and existing regulations and (2) issue new guidelines where none are currently in effect to allow industrial dischargers in point source categories involving the manufacture, or use in the manufacturing process, of strong acids or substantial quantities of bases some modest relief from the Agency's requirement that pH be maintained within the 6 to 9 range on a continuous basis.

The Centec Report establishes that for most plants studied it would be reasonable to require maintenance of pH 6 to 9 for 99 percent of the time on a monthly basis provided that excursions outside pH 3.5 to 11 did not exceed 15 minutes duration. The extensive data presented indicates that implementation of this recommendation would have no negative environmental impact and that these parameters are generally attainable although at considerable cost. Though only two of the plants studied by Centec are currently meeting the pH requirements suggested, the Centec Report states that most plants in the subcategories studied should be able to do so through the use of the advanced pH control technology identified in the Report. It must be emphasized, however, that the

recommended pH parameters represent the maximum pH control attainable at an economically feasible cost. They do not take into consideration the occasional severe plant upset or equipment malfunction which may make it impossible to meet a 99 percent compliance level. The new regulations therefore must also contain a limited upset provision covering such situations.

The revision of Agency policy hereby requested requires the withdrawal by the Agency of the July 15, 1976 memorandum from Jeffrey Miller to Regional Enforcement Directors re "pH Limitations in NPDES Permits", discussed above, or the issuance of a memorandum clarifying its applicability.

Since effluent limitations guidelines and standards of performance for many of the point source subcategories addressed in this petition are currently under remand to the Agency, new pH guidelines for these subcategories should be issued which contain pH parameters consistent with the recommendations contained herein.

Where regulations are now effective for the specified subcategories, the pH parameters contained therein should be revised. These existing regulations are subject to judicial review under § 509(b) of the Act on the basis of the new data and information contained in the Centec Report that is submitted herewith. However, to avoid unnecessary litigation, we are first submitting this information to the Agency and requesting that appropriate modifications in those regulations be made.

It is imperative that these Agency actions be accomplished promptly in order to provide permit-issuing authorities necessary guidance in issuance of NPDES permits containing reasonably achievable pH parameters.

Respectfully submitted,

CLEARY, GOTTLIEB, STEEN & HAMILTON

Attorneys for Petitioners

OF COUNSEL:

Richard deC. Hinds
Douglas E. Kliever
John S. Magney
1250 Connecticut Avenue, N.W.
Washington, D.C. 20036
(202) 223-2151

Dated: August 3, 1978

pH UNDER CONTINUOUS MONITORING

Background

Categorical standards for effluent guidelines generally require that the pH of plant effluent be maintained in the range of 6 to 9, and some permits require that pH be monitored continuously. Although data indicate that achievement of this standard all of the time is not possible, a standard can be established for a percentage of time over which a plant must achieve the required range.

The findings of this report support two standards with regard to continuous monitoring of wastewater pH:

(1) Plants with required continuous monitoring are not to be outside of the categorical pH range more than 432 minutes, or one per cent, of each month.

(2) All continuous periods during which the final effluent is outside the categorical range that exceed 15 minutes in duration are to be reported to the permit authority.

The lack of perfect compliance with the standard of pH 6-9 at all times is in large part due to the existence of continuous monitoring for pH. Since perfect control of many pollutants is impossible, it has been Agency policy to set a standard for which the probability of violation

at a given instant by a well designed and maintained plant is not greater than .01. When the monitoring schedule specifies grab or composite samples, the detection a departure from the standard is a rare event because the departure must coincide with the time of sampling. With continuous monitoring, however, all departures will be detected, and consequently, known deviations outside the categorical range are not rare events, although the plant may be within the range almost all of the time. Categorical pH standards, therefore, are consistent with other effluent guideline standards and Agency policy; however, the introduction of continuous monitoring into permit requirements necessitates a clarification of policy to determine appropriately whether a plant is in compliance.

To secure data on the performance of pH control in several industries, the Agency collected continuous monitoring data from six plants. Each of these plants provided one year of strip charts from the pH recorders. Data were also collected on the types of treatment performed at each plant, the reason for each excursion (defined below) from the range 6-9, and the costs of pH control systems. Results of this data collection are documented in the draft contractor's report, An Assessment of pH Control of Process Waters in Selected Plants, by JRB Associates, March 1979.

An excursion is a continuous period when the plant's effluent is outside the range 6-9. For each excursion, the date, the time the excursion began, the reason code (See Table 1), and the total time in excursion were entered into a data base. This data base constitutes the information

used in this report for evaluation of pH standards coupled with continuous monitoring.

Analysis of Monthly Compliance Time.

A requirement that pH 6-9 be maintained 99 per cent of the time is consistent with existing Agency policy for setting effluent guidelines. According to Table 2, each plant in the data base meets the standard at least 99 per cent of the time on an annual basis. However, there are plants in the data base which did not achieve 99 per cent compliance in every month; the following analysis addresses the question of variability on a month-to-month basis.

An examination of the empirical distribution functions of lengths of individual excursions reveals that two types of distributions exist, depending on the reason code. Excursions of reasons codes 1, 2, 4, and 5 were found to have an approximately exponential distribution with a mean to be determined from the data for each plant. Excursions with reason code 6 were found to have positive probability of being one minute (the limit of resolution for reading from strip charts) or less, with the time in excess of one minute having an approximately exponential distribution. (Reason Code 3 is excluded from this analysis because "excursions" with this reason code have no flow associated with them.) It was assumed that the number of excursions from reason codes 1, 2, 4 and 5 is a Poisson random variable with a mean to be determined from the data and that the number of excursions from reason code 6 is Poisson with not necessarily the same mean. These assumptions reflect the fact that the total monthly time in excursion is a sum of random number of individual excursion times.

Because the distribution function of total excursion time does not have a simple, closed-form mathematical solution, a simulation of 1000 months of pH excursions with reason codes 1, 2, 4, 5 and 6 was run for each plant. From each simulation, the 99th percentile for the total monthly excursion times was selected. As seen in Table 3, three of the six plants achieved less than 432 minutes per month (This is one per cent of a 30 day month.) in excursion; the median across plants of these 99th percentiles is 379 minutes per month in excursion. Where previous effluent guidelines have been based on the performance at several plants, the median across plants has generally been used as a basis for a standard. Following this method, a standard which allows one per cent of a month, or 432 minutes, in excursion is approxmiately the same as the median of 379 minutes of plant-specific 99th percentiles. (It is also to be noted that the analysis performed by Centec Consultants in response to the JRB report is also consistent with a policy allowing excursions one per cent of the time.)

In computing the mean lengths of excursions, three data points were deleted as outliers, because they were associated with very long excursions (relative to other excursions at the same plant) which would not be typical of regular plant operations. Specifically, an excursion of 1900 minutes was deleted from the data for Plant 8011; and excursions of 720 and 330 minutes were deleted from the data for Plant 3141. The simulations were run using mean excursion lengths computed without outliers.

The implications of a requirement that excursions exceeding 15 minutes in length are presented here and in Tables 5, 6, and 7. Table 5 presents aggregate statistics on the numbers of excursions by Reason Code and the percentage within each code which exceed 15 minutes in length. These range from 71 per cent of the relatively rare excursions due to process upset to less than 3 per cent of the relatively frequent excursions due to instrument error. Summing the expected numbers of excursions in the last column, the requirement would entail, in aggregate, approximately 14 reportable events per plant per year. More detail is provided in Table 6, which deals only with excursions in Reason Codes 1, 2, 4, 5, in which excursions in excess of 15 minutes are relatively more frequent.

Table 7 includes excursions from all Reason Codes (except 3) and reflects the consequences of the 15-minute reporting requirement. The reason code which contributes the greatest number of excursions in excess of 15 minutes is 5, the code for "unknown" reasons. All but a few of the excursions are for reasons related to the malfunction of processes or treatment systems.

Table 1.

Reason Coding System

Reason Code	Reason Type
1	Process Upset
2	Treatment System Upset
3	Technical Excursion-Excursion recorded, but flow recording charts indicate no flow to surface water
4	Other
5	Unknown
6	Instrument Error

Note: The word upset, as used here, refers to any malfunction of a manufacturing process or treatment system and is not to be confused with occurrences defined in "Upset and Bypass" regulations.

Table 2.

Percent Annual Compliance Times
for Selected Data Subsets

Plant	Percent Annual Compliance Time — All Reason Codes	Percent Annual Compliance Time — Codes 1, 2, 4, 5	Percent Annual Compliance Time Codes 1, 2
1306	99.8	100.0 (1)	100.0 (1)
2128	100.0 (1)	100.0 (1)	100.0
2653	99.4	99.4	99.5
3141	99.4	99.5	99.5
6662	99.7	99.7	100.0 (1)
8011	99.2	99.6	99.7
Average	99.6	99.7	99.8

(1) Calculated percent was 99.95 or larger

Reason Code	Reason
1	Process Upset
2	Treatment System Upset
3	Technical Excursion
4	Other
5	Unknown
6	Instrument Error or Calibration

Table 3. Montly Frequencies and Average Lengths of Excursions With Simulated 99th Percentile of Monthly Time in Excursion.

Plant ID	Monthly Frequency of Excursion: Reason Codes 1, 2, 4, 5	Monthly Frequency of Excursion: Reason Code 6	Mean Length of Excursion: Reason Codes 1, 2, 4, 5	Mean Length of Excursion: All Reason Code 6	Reason Code 6 and greater than 1 min	Simulated 99th Percentile, Minutes
1306	0.50	22.75	22.0	1.72	5.48	143
2128	0.17	0	24.5	0(1)	0(1)	62
2653	1.75	10.58	136.2	1.06	3.33	1200
3141 (2)	11.27	1.5	17.7	16.17	19.2	463
6662	1.08	0	115.4	0(1)	0(1)	782
8011 (3)	1.0	4.5	22.3	12.67	53.5	316
Average	2.63	6.57	56.4	7.91	20.38	494
Median	1.04	3.00	23.4	7.20	12.34	379

Notes:

(1) No excursions reported in this category.
(2) Two longest excursions deleted from the data base as outliers.
(3) Longest excursion deleted from the data base as an outlier.

Table 4. Numbers of Excursions by Plant, Reason Code, and Length

Plant ID	Number of Excursions: Reason Codes 1, 2, 4 5	Reason Code 6	Reason Code 6: Longer than 1 min.
1306	6	273	44
2128	2	0	0
2653	21	127	3
3141	134(1)	18	15
6662	13	0	0
8011	12(2)	54	12

Notes:

(1) Two outliers deleted.
(2) One outlier deleted.

Table 5

Aggregate Excursion Statistics

Reason Code	Number	Percent Exceeding 15 Min.	Expected Number Greater T 15 Minutes Per Plant Per
1. Process	17	71%	2.0
2. Treatment	44	43%	3.2
3. Technical	40	45%	3.0
4. Other	8	70%	1.0
5. Unknown	122	26%	5.3
6. Instrument	472	2.8%	2.2
7. All	703	12.5%	13.8

Technical excursions could be avoided by installation of pH recorders dedicated to monitoring. The level of 15 minutes - plus excursions due to instrument error is small, and the other could be subject to upset and bypass provisions given necessary action and justification.

Table 6

Distribution of Excursions in Reason Codes 1, 2, 4, and 5 by Plant

	Number of Excursions		
Plant ID	Total	Greater than 15 Min.	Percentage Exceeding 15 Min.
1306	6	3	50
2128	2	1	50
2653	21	18	86
3141	136	33	24
6662	13	9	69
8011	13	6	46

Table 7. Distribution of Excursions Exceeding 15 Minutes by Plant and Reason Code.

Plant	Reason Code 1	2	4	5	6	TOT.
1306	2	1	0	0	4	7
2128	0	0	1	0	0	1
2653	10	3	2	3	0	18
3141	0	4	0	29	5	38
6662	0	9	0	0	0	9
8011	0	2	4	0	4	10
TOTAL	12	19	7	32	13	83

Table 8.

CUMULATIVE FREQUENCY DISTRIBUTION
FOR REASON CODE(S):
(1 2 4 5)

DURATION (MIN) T=T*	CUMULATIVE FREQUENCY N(T>T*)	PROBABILITY (T>T*)
.0	191.0	1.000
1.0	188.0	.984
2.0	180.0	.942
3.0	156.0	.817
5.0	127.0	.665
6.0	126.0	.660
7.0	113.0	.592
8.0	110.0	.576
10.0	92.0	.482
12.0	90.0	.471
13.0	87.0	.455
14.0	86.0	.450
15.0	70.0	.366
20.0	62.0	.325
21.0	60.0	.314
22.0	57.0	.298
25.0	54.0	.283
30.0	46.0	.241
35.0	44.0	.230
36.0	43.0	.225
37.0	42.0	.220
40.0	40.0	.209
45.0	39.0	.204
50.0	38.0	.199
60.0	36.0	.188
65.0	35.0	.183
70.0	32.0	.168
75.0	30.0	.157
80.0	29.0	.152
90.0	27.0	.141
95.0	25.0	.131
105.0	23.0	.120
120.0	20.0	.105
125.0	19.0	.099
140.0	18.0	.094
142.0	17.0	.089
160.0	16.0	.084
195.0	15.0	.079
204.0	14.0	.073
208.0	13.0	.068
210.0	11.0	.058
240.0	7.0	.037
266.0	6.0	.031
293.0	5.0	.026
325.0	4.0	.021
330.0	3.0	.016
420.0	2.0	.010
720.0	1.0	.005
1900.0	.0	.000

TABLE 9

CUMULATIVE FREQUENCY DISTRIBUTION
FOR REASON CODE(3):
(6)

DURATION (MIN) T=To	CUMULATIVE FREQUENCY N(T>To)	PROBABILITY. (T>To)
.0	472.0	1.000
1.0	74.0	.157
2.0	44.0	.093
2.5	43.0	.091
3.0	34.0	.072
4.0	31.0	.066
5.0	24.0	.051
7.0	20.0	.042
8.0	18.0	.038
10.0	13.0	.028
18.0	12.0	.025
20.0	10.0	.021
30.0	7.0	.015
33.0	6.0	.013
35.0	5.0	.011
40.0	3.0	.006
135.0	2.0	.004
160.0	1.0	.002
360.0	.0	.000

☆U.S. GOVERNMENT PRINTING OFFICE: 1980-341-082/131