United States
Environmental Protection
Agency

Office of Air Quality
Planning and Standards
Research Triangle Park NC 27711

EPA-450/4-83-004
August 1982

Air

EPA

Characterization Of PM10 And TSP Air Quality Around Western Surface Coal Mines

CHARACTERIZATION OF PM 10 AND TSP AIR QUALITY AROUND WESTERN SURFACE COAL MINES

by

PEDCo Environmental, Inc.
2420 Pershing Road
Kansas City, Missouri 64108

and

TRC Environmental Consultants
8775 East Orchard Road
Englewood, Colorado 80111

Contract No. 68-02-3512
Work Assignment No. 35
PN 3525-35

Project Officer

Thompson G. Pace

AIR MANAGEMENT TECHNOLOGY BRANCH
U.S. ENVIRONMENTAL PROTECTION AGENCY
RESEARCH TRIANGLE PARK, NORTH CAROLINA 27711

August 1982

U.S. Environmental [illegible]
[illegible] S. Library
230 S. Dearborn St.
Chicago, IL 60604

This report has been reviewed by the Office Of Air Quality Planning And Standards of the U. S. Environmental Protection Agency and approved for publication as received from Pedco Environmental, Inc. Approval does not signify that the contents necessarily reflect the views and policies of the U. S. Environmental Protection Agency, nor does mention of trade names or commercial products constitute endorsement or recommendation for use.

EPA-450/4-83-004

CONTENTS

	Page
Figures	v
Tables	x
1.0 Executive Summary	1
1.1 Introduction	1
1.2 Conclusions	2
2.0 Characterization of PM 10 and TSP Air Quality around Western Surface Coal Mines using Monitoring Data	11
2.1 Background	11
2.2 Data collected	11
2.3 Procedure to infer PM 10 concentrations from monitored TSP concentrations	12
2.4 Description of results	23
2.5 Error analysis and assumptions	39
3.0 Characterization of PM 10 and TSP Air Quality around Western Surface Coal Mines using Previous Modeling Studies	43
3.1 Background	43
3.2 Previous modeling studies	44
3.3 Other descriptive models	70
3.4 Relationship of modeling results to possible ambient standards and the PSD permitting process	76
4.0 Characterization of PM 10 and TSP Air Quality around Western Surface Coal Mines using New Predictive Tools	77
4.1 Background	77
4.2 Calculation of emissions	77
4.3 Calculation of concentrations	92
4.4 Potential sources of error in the prediction process	112
4.5 Relationship of scenario results to possible regulatory options	116

CONTENTS (continued)

		Page
5.0	Synthesis of Three Approaches to Characterize PM 10 and TSP Air Quality around Western Surface Coal Mines	121
	5.1 Introduction	121
	5.2 Comparison of alternate approaches	121
6.0	Need for Further Study	125
	6.1 Additional monitoring	125
	6.2 Deficiencies in the predictive process	126
	6.3 Impact of additional control measures and alternate mine configurations on concentrations	126
	6.4 Standardized methods	127
	6.5 Regulatory implications	127
	References	128
Appendices		
	A Mass Fraction Calculations Derived for Section 2.0 Procedure to Infer PM 10 Concentrations from Measured TSP Data	130
	B Computation of PM 10, PM 5, and PM 2.5 Mass Fractions at Various Downwind Distances for Section 2.0 Procedure	137
	C ICS Model Application to Three Mine Scenarios	147

FIGURES

Number		Page
1	Maximum Annual Geometric Mean Concentrations at Mine Boundary--TSP and PM 10	9
2	Maximum 24-Hour Concentrations at Mine Boundary--TSP and PM 10	10
3	Mass Fraction of TSP, Stability Class D, 4.3 m/s	21
4	Mass Fraction of TSP, Stability Class D, 2.5 m/s	22
5	Annual Average Monitored TSP and Calculated PM 10 Concentrations, Northeast Wyoming, Mine 1	26
6	Annual Average Monitored TSP and Calculated PM 10 Concentrations, Northeast Wyoming, Mine 2	27
7	Annual Average Monitored TSP and Calculated PM 10 Concentrations, Northeast Wyoming, Mine 3	28
8	Annual Average Monitored TSP and Calculated PM 10 Concentrations, Northeast Wyoming, Mine 4	29
9	Annual Average Monitored TSP and Calculated PM 10 Concentrations, Northeast Wyoming, Mine 5	30
10	Annual Average Monitored TSP and Calculated PM 10 Concentrations, Northeast Wyoming, Mine 6	31
11	Annual Average Monitored TSP and Calculated PM 10 Concentrations, Northeast Wyoming, Mine 7	32
12	Annual Average Monitored TSP and Calculated PM 10 Concentrations, Northeast Wyoming, Mine 8	33
13	Annual Average Monitored TSP and Calculated PM 10 Concentrations, Southwest Wyoming, Mine 9	34

FIGURES (continued)

Number		Page
14	Annual Average Monitored TSP and Calculated PM 10 Concentrations, Northeast Colorado Mine 10	35
15	Annual Average Monitored TSP and Calculated PM 10 Concentrations, Southwest Montana Mine 11	36
16	Annual Average Monitored TSP and Calculated PM 10 Concentrations, Western North Dakota, Mine 12	37
17	Sensitivity of the Procedure to Infer PM 10 Concentrations to Windspeed Assumptions	40
18	Sensitivity of the Procedure to Infer PM 10 Concentrations to Stability Class Assumptions	42
19	Geographical Areas of Interest	45
20	Annual Average Modeled TSP Concentrations Powder River Basin, Mine 1	48
21	Annual Average Modeled TSP Concentrations Powder River Basin, Mine 2	49
22	Annual Average Modeled TSP Concentrations Powder River Basin, Mine 3	50
23	Annual Average Modeled TSP Concentrations Powder River Basin, Mine 4	51
24	Annual Average Modeled TSP Concentrations Powder River Basin, Mine 5	52
25	Annual Average Modeled TSP Concentrations Green River/Hams Fork Basin, Mine 6	53
26	Annual Average Modeled TSP Concentrations Green River/Hams Fork Basin, Mine 7	54
27	Annual Average Modeled TSP Concentrations Green River/Hams Fork Basin, Mine 8	55

FIGURES (continued)

Number		Page
28	Annual Average Modeled TSP Concentrations Green River/Hams Fork Basin, Mine 9	56
29	Annual Average Modeled TSP Concentrations Green River/Hams Fork Basin, Mine 10	57
30	Annual Average Modeled TSP Concentrations Green River/Hams Fork Basin, Mine 11	58
31	Annual Average Modeled TSP Concentrations Green River/Hams Fork Basin, Mine 12	59
32	Annual Average Modeled TSP Concentrations Green River/Hams Fork Basin, Mine 13	60
33	Annual Average Modeled TSP Concentrations Green River/Hams Fork Basin, Mine 14	61
34	Annual Average Modeled TSP Concentrations Green River/Hams Fork Basin, Mine 15	62
35	Annual Average Modeled TSP Concentrations Green River/Hams Fork Basin, Mine 16	63
36	Existing and Anticipated Surface Coal Mining Operations in Campbell County	65
37	Annual Average TSP Concentrations ($\mu g/m^3$), Total Dust Sources with Deposition, no Background Added	67
38	Annual Average TSP Concentrations ($\mu g/m^3$), Coal Dust Sources with Deposition	68
39	Annual Average TSP Concentrations ($\mu g/m^3$), Respirable Particulate ≤ 3 μm without Deposition	69
40	Assumed Worst-Case Mine Configuration	71
41	Nomograph Procedure for Predicting Worst-Case Fenceline Concentration, TSP	72
42	Distance from Mine Center over which TSP Class II Increment is Exceeded in the Powder River Basin	74

FIGURES (continued)

Number		Page
43	Profile Presentation of a Powder River Basin Mine, Annual TSP Concentrations	75
44	Examples of Composite Particle Size Distributions from Coal Mining Particulate Sources	89
45	Theoretical Impact of Incorrect Particle Size Distribution on Model-Predicted PM 10 or TSP Concentrations	91
46	ISC Modeled Annual Geometric Mean TSP Concentrations, Powder River Basin	97
47	ISC Modeled Annual Geometric Mean PM 10 Concentrations, Powder River Basin	98
48	ISC Modeled 24-Hour TSP Concentrations, Powder River Basin	99
49	ISC Modeled 24-Hour PM 10 Concentrations, Powder River Basin	100
50	ISC Modeled Annual Geometric Mean TSP Concentrations, San Juan Basin	101
51	ISC Modeled Annual Geometric Mean PM 10 Concentrations, San Juan Basin	102
52	ISC Modeled 24-Hour TSP Concentrations, San Juan Basin	103
53	ISC Modeled Annual Geometric Mean TSP Concentrations, Green River/Hams Fork Basin	104
54	ISC Modeled 24-Hour PM 10 Concentrations, San Juan Basin	106
55	ISC Modeled Annual Geometric Mean PM 10 Concentrations, Powder River Basin	107
56	ISC Modeled 24-Hour TSP Concentrations, Green River/Hams Fork Basin	108
57	ISC Modeled 24-Hour PM 10 Concentrations, Green River/Hams Fork Basin	109

FIGURES (continued)

Number		Page
58	Maximum Annual Geometric Mean Concentrations at Mine Boundary--TSP and PM 10	122
59	Maximum 24-Hour Concentrations at Mine Boundary--TSP and PM 10	123

TABLES

Number		Page
1	Range of Measured TSP and Inferred PM 10 Concentrations near Western Surface Coal Mines	3
2	Maximum Concentration versus Distance by Scenario, $\mu g/m^3$ (No Background Concentration Added)	6
3	Violations of the NAAQS and Class II PSD Increments	7
4	Particulate Monitoring Information	13
5	Particle Size Distributions by Mass Fraction	16
6	Computation of Settling Velocity	16
7	Reflection Coefficients	17
8	Groundlevel Concentrations at 1,000 Meters, "D" Stability, and 4.30 Meters/Second Windspeed	18
9	Relative Groundlevel Concentrations at 1,000 Meters, "D" Stability, and 4.30 Meters/Second Windspeed	19
10	Inferred PM 10 Annual Average Concentrations	24
11	Inferred PM 10 Second-Highest 24-Hour Concentrations	38
12	Particulate Emission Factors and Control Efficiencies used in Previous Modeling Studies	47
13	Surface Coal Mines Projected for the Campbell County Portion of the Powder River Basin	66
14	Mining Operations that Generate Particulate Emissions	78

TABLES (continued)

Number		Page
15	Hypothetical Mine Annual Activity Parameters	80
16	Base Emission Factors	81
17	Independent Variable Values used in Emission Factor Equations	83
18	Particulate Emission Factors for Hypothetical Mines	85
19	Calculated Emissions	86
20	Distribution of Emissions by Particle Size	87
21	Assumed Background Concentrations used in the Scenario Analysis	95
22	Annual Average Geometric/Arithmetic TSP Concentrations Measured by the Hi-Vol Method	96
23	Maximum Concentration versus Distance by Scenario, $\mu g/m^3$ (No Background Concentration Added)	110
24	Violations of the NAAQS and Class II PSD Increments	111
25	Potential Sources of Error in the Predictive Process for Estimating Particulate Concentrations around Surface Coal Mines	113
26	Impact of Additional Particulate Controls on Emissions, Powder River Basin Scenario Example	117
27	Impact of Additional Particulate Controls on Maximum Off-Site Concentrations	119

SECTION 1.0

EXECUTIVE SUMMARY

1.1 INTRODUCTION

Various regulatory changes that would impact the surface coal mining industry are being considered. These changes relate to the ambient particulate standard and the Prevention of Significant Deterioration (PSD) regulations.

The Environmental Protection Agency (EPA) is currently considering a new ambient particulate standard that would address particulates less than 10 microns in diameter (termed PM 10).

Additionally, there is considerable debate over whether fugitive dust from surface mines should consume PSD increment. Currently, federal PSD regulations dictate that fugitive and nonfugitive dust consume increment. These regulations may change as a result of EPA's settlement agreement (Chemical Manufacturer's Association, et al v. EPA) or as a result of changes in the Clean Air Act. The fugitive dust issue is critically important because the vast majority of particulate emissions at surface mines are fugitive.

The objectives of this study are: (1) to provide data on PM 10 concentrations and total suspended particulate (TSP) concentrations around western surface coal mines sufficient to assess their relationship to possible changes to ambient standards; (2) to apply new emission factors and the new ISC model to predict PM 10 and TSP concentrations around hypothetical surface mines; and (3) to assess the impact of the PM 10 and TSP concentrations on the permitting process.

The objectives of the study are addressed through analysis of existing monitoring data (Section 2.0), previous modeling studies (Section 3.0), and new modeling studies using recently available improved techniques (Section 4.0). The results of the three approaches are synthesized in Section 5.0. Recommendations for further study are outlined in Section 6.0.

1.2 CONCLUSIONS

1.2.1 Characterization of PM 10 and TSP Air Quality around Western Surface Coal Mines using Monitoring Data

Particulate monitoring around western surface coal mines has been almost exclusively for TSP. To support the regulatory decision making process, it is desirable to have a knowledge of PM 10 concentrations. Therefore, a theoretical procedure was derived to infer PM concentrations from monitored TSP data. The procedure is subject to several uncertainties and a qualitative error analysis has been performed.

TSP Concentrations--

Monitoring data were collected from 12 mines with annual coal production ranging from 0.7 to 16.0 million tons per year. Maximum monitored concentrations were 86 and 324 $\mu g/m^3$ on an annual and second-highest 24-hour basis (Table 1). Six of the twelve mines had monitors located outside the mine boundaries facilitating comparison of the monitored values with National Ambient Air Quality Standards (NAAQS) and PSD increments. TSP concentrations outside the mine boundary did not exceed the primary NAAQS on an annual or 24-hour basis. The secondary 24-hour NAAQS were exceeded at two of the six mines.

PM 10 Concentrations--

Maximum PM 10 concentrations calculated from TSP monitoring data were 29 and 98 $\mu g/m^3$ on an annual and second-highest 24-hour basis. The calculated maximum PM 10 concentrations outside mine boundaries and above background concentrations were 8 and 39 $\mu g/m^3$ on an annual and 24-hour basis. If the PSD Class II increments remain the same, but the applicable particle size category changes from TSP to PM 10, the data indicate that the 24-hour increment may still be a restraint to obtaining a permit. This conclusion should be considered tentative due to uncertainties in the calculation procedure.

1.2.2 Characterization of PM 10 and TSP Air Quality around Western Surface Coal Mines using Previous Modeling Studies

Most previous modeling studies allow only a characterization of annual average TSP concentrations. Short-term TSP modeling studies have been performed on a more limited basis and are considered to be less accurate because of the difficulty in predicting short-term activity patterns, emissions, and meteorological parameters. Modeling for sub-TSP particle size ranges, such as for PM 10, has been limited to a few theoretical studies.

TSP Concentrations--

Previous modeling suggests that ambient concentrations resulting from a given level of emissions vary considerably by

TABLE 1. RANGE OF MEASURED TSP AND INFERRED PM 10 CONCENTRATIONS NEAR WESTERN SURFACE COAL MINES[a]
($\mu g/m^3$)

Location	Measured TSP concentrations		Inferred PM 10 concentrations	
	Annual	Second-highest 24-hour	Annual	Second-highest 24-hour
Within mine boundaries				
concentration	17-86	79-324	9-29	19-98
above background	2-68	64-306	0-20	10-91
Outside mine boundaries				
concentration	18-42	56-180	10-17	24-48
above background	3-27	41-165	1-8	13-39

[a] Based on monitoring at 12 mines. The data may not represent the full range of monitored values at all coal mines.

air basin because of different dispersion conditions, and because of TSP background concentrations ranging from about 15 $\mu g/m^3$ to 30 $\mu g/m^3$. However, for mines isolated from other particulate sources (such as other mines), previous modeling indicates that annual average ambient fenceline concentrations seldom exceed 50 $\mu g/m^3$. At mines with an annual coal production of greater than about 15 million tons, however, annual concentrations may approach the primary and secondary annual standards under worst-case mine configurations. In all cases examined, annual TSP concentrations decreased to ≤ 1 $\mu g/m^3$ within four miles of the mine boundary.

Based on previous modeling studies, PSD Class II increments appear to be a much greater restraint than the NAAQS. Even with application of EPA Region VIII defined Best Available Control Technology (BACT), the annual PSD Class II increment was predicted to be violated up to 2 miles beyond the fenceline at mines with an annual production of about 10 million tons a year or more. The 24-hour PSD Class II increment would be an even greater restraint with violations as distant as 5 miles beyond the fenceline at isolated mines with greater than 10 million tons production.

Often mines are not isolated from other mines. This is particularly true in the Powder River Basin. Fugitive dust consumption of available PSD increment in that and other regions may severely restrict the planned level of mining.

PM 10 Concentrations--

Previous modeling studies of sub-TSP size fractions do not allow adequate characterizations of PM 10 concentrations around western surface coal mines.

1.2.3 Characterization of PM 10 and TSP Air Quality around Western Surface Coal Mines using New Predictive Tools

Two new tools--improved emission factors and the ISC dispersion model--are now available for assessing a western surface coal mine's impact on air quality.

In this report the new predictive tools were applied to three hypothetical surface coal mines. The mines were assumed to have the following annual coal production rates:

- Powder River Basin (near Gillette, Wyoming): 25 million tons per year.
- Green River/Hams Fork Basin (near Craig, Colorado): 3.6 million tons per year.
- San Juan Basin (near Four Corners area): 6.5 million tons per year.

The hypothetical mines were chosen to represent a cross section of mine size and mine location found in the west.

Using the new emission factors coupled with the ISC model, TSP and PM 10 concentrations were computed for annual average and 24-hour time periods. The predicted concentrations are directly comparable with existing TSP standards, with possible PM 10 standards, and with PSD increments. The results of the modeling are summarized in Tables 2 and 3.

Based on the modeling work, several observations can be made:

- TSP standards. Only the largest mine, the Powder River Basin Mine, shows violations of the annual or 24-hour TSP NAAQS.

- PSD increments. Presently, federal PSD regulations dictate that fugitive and nonfugitive dust consume PSD increment. All three of the hypothetical mines exhibit TSP exceedances of the annual and 24-hour PSD Class II increment outside of the mine boundary.

- PM 10 concentrations. The peak PM 10 concentrations estimated at the mines' fencelines are between 1/3 and 2/3 the magnitude of the TSP concentrations. PM 10 concentrations consume all of the PSD Class II increment at two of the three scenario locations.

Several regulatory options were considered and applied to the scenario analysis results. Two of these options were: (1) requiring additional particulate control measures; and (2) applying the PSD increment consumption determination at some distance beyond the mine boundary. All physically possible particulate control measures were applied to the scenarios, regardless of their cost or other environmental consequences. For the Powder River Basin scenario, TSP concentrations were still twice the annual Class II increment. The PM 10 concentration also exceeded the increment.

If the PSD program is viewed as a resource allocation program, it may be reasonable to apply the increment consumption determination at some distance beyond the boundary. Regarding TSP concentrations, the 24-hour increment would still be a restraint for large mines at distances 5 miles beyond the mine boundary. However, if PM 10 concentrations were used to compute increment consumption, a 2-mile buffer around a mine boundary would allow even the Powder River Basin scenario mine to receive a PSD permit.

TABLE 2. MAXIMUM CONCENTRATION VERSUS DISTANCE BY SCENARIO, μg/m³
(NO BACKGROUND CONCENTRATION ADDED)

Scenario	TSP						PM 10					
	At boundary	Distance from boundary, miles					At boundary	Distance from boundary, miles				
		1	2	3	4	5		1	2	3	4	5
Annual concentrations												
Powder River Basin	115	115	10	7	6	4	51	40	7	6	4	3
San Juan Basin	23	20	8	7	6	5	16	11	7	4	3	2
Green River/Hams Fork Basin	30	20	13	7	4	3	23	15	5	4	3	2
Second-highest 24-hour concentrations												
Powder River Basin	867	260	240	165	80	45	289	200	45	25	16	12
San Juan Basin	106	80	50	45	37	32	35	30	20	18	16	12
Green River/Hams Fork Basin	104	55	25	18	14	10	30	16	11	7	4	1

TABLE 3. VIOLATIONS OF THE NAAQS AND CLASS II PSD INCREMENTS

Scenario	TSP																		PM 10					
	Primary NAAQS[a]						Secondary NAAQS[a]						Class II increment						Class II increment					
	At boundary	Distance from boundary, miles					At boundary	Distance from boundary, miles					At boundary	Distance from boundary, miles					At boundary	Distance from boundary, miles				
		1	2	3	4	5		1	2	3	4	5		1	2	3	4	5		1	2	3	4	5
Annual concentrations																								
Powder River Basin	X	X					X	X					X	X					X	X				
San Juan Basin													X	X										
Green River/Hams Fork Basin													X	X					X					
Second-highest 24-hour concentrations																								
Powder River Basin	X	X					X	X	X	X			X	X	X	X	X	X	X	X	X			
San Juan Basin													X	X	X	X	X							
Green River/Hams Fork Basin													X	X										

[a] Background concentration added.

1.2.4 Synthesis

Three approaches to characterizing PM 10 and TSP air quality around western surface coal mines are utilized in this report. These approaches are examination of monitoring data, review of previous modeling studies, and application of improved tools to the predictive process.

The data derived from the three methods are in relative agreement. The annual and 24-hour TSP NAAQS are restraining only for large mines (probably greater than 15 million tons of annual production) or in areas with several nearby mines.

The PSD increments (particularly the 24-hour increment) are much more restrictive than the NAAQS. TSP concentrations from mines producing as little as 5 million tons/year may consume all of the Class II increment under worst-case site configurations (Figures 1 and 2). Inclusion of fugitive emissions in the PSD process would severely restrict the ability of new mines to obtain a PSD permit.

Changing the pollutant of measurement from TSP to PM 10 would be less restrictive to the coal mining industry, but may still prohibit large mines from obtaining a PSD permit.

1.2.5 Need for Additional Study

The need for further research became apparent at several points in the study. Required further study can be divided into five broad categories. These are:

1. Additional monitoring to gain particle size information and to attempt to validate the predictive process.

2. Analysis of deficiencies in the predictive process, including, but not limited to particle deposition and pit retension.

3. Impact of additional particulate control measures and alternate mine configurations on concentrations.

4. Standardized methods.

5. Regulatory implications.

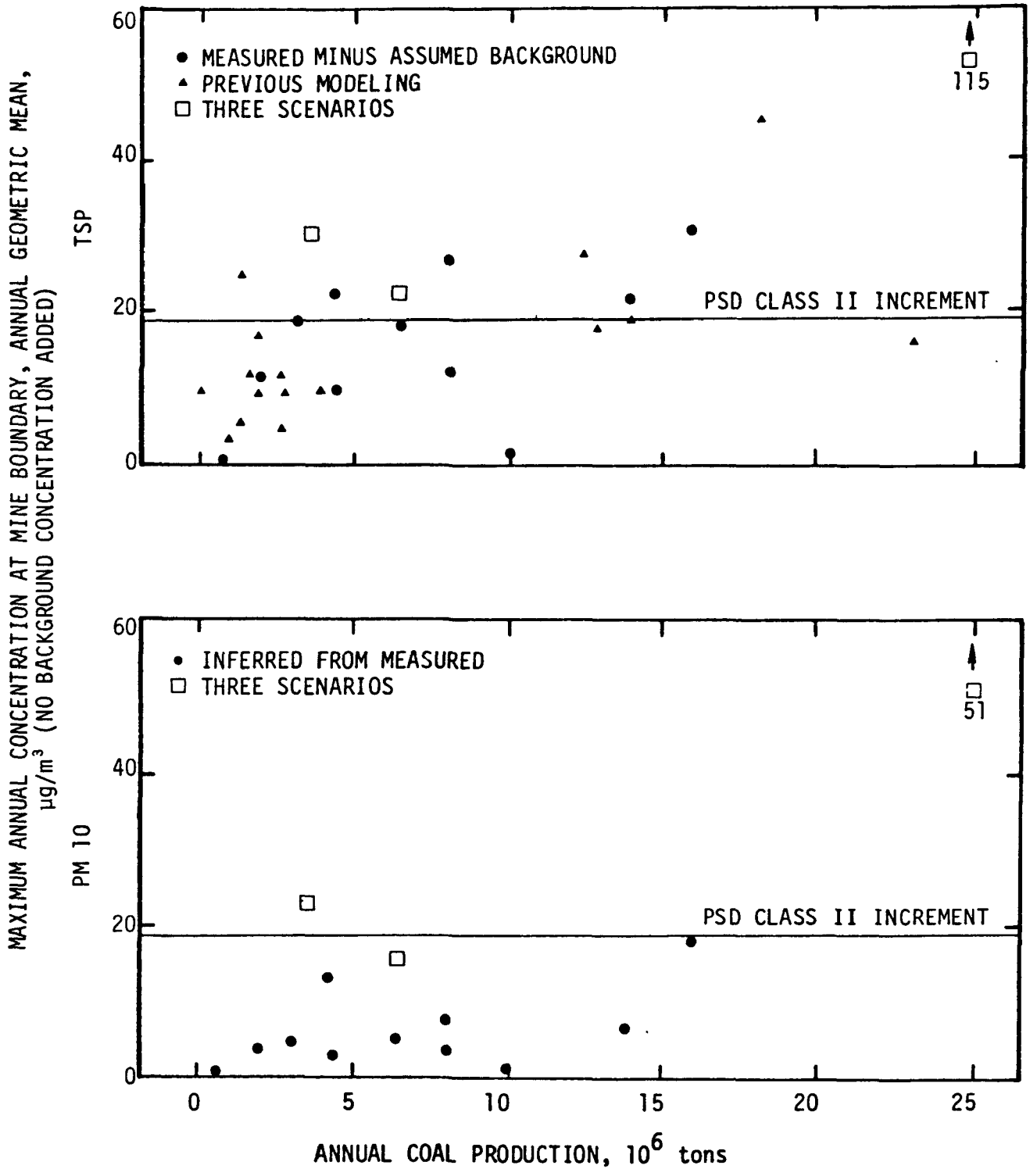

Figure 1. Maximum annual geometric mean concentrations at mine boundary--TSP and PM 10.

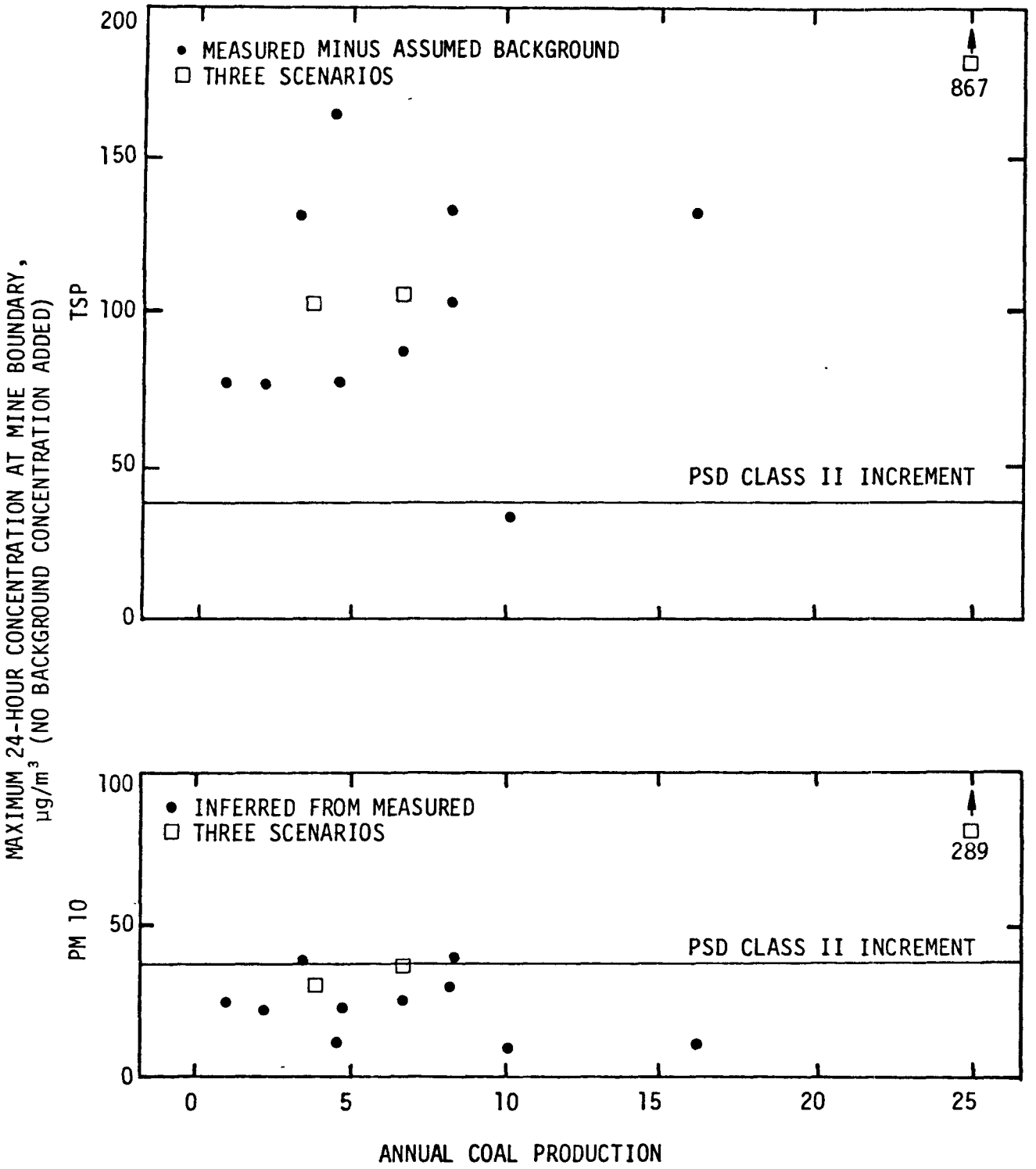

Figure 2. Maximum 24-hour concentrations at mine boundary--TSP and PM 10.

SECTION 2.0

CHARACTERIZATION OF PM 10 AND TSP AIR QUALITY AROUND WESTERN SURFACE COAL MINES USING MONITORING DATA

2.1 BACKGROUND

Over the last few years a base of air quality monitoring data has been generated at proposed and operating western surface mines. However, the data from the individual mines has not been compiled and analyzed in a comprehensive manner. Ideally, the compilation of these data would allow an immediate characterization of particulate concentrations around western surface coal mines. However, a great amount of data is required to interpret the monitoring results.

Monitors are sited under highly varying conditions. The resulting concentration measurements are a function of a number of variables. These variables include: production level, size of mining area, production methods, types of sources, source-receptor separation, terrain features, and meteorological patterns. Any rigorous interpretation of mine monitoring data requires that monitor siting be considered in conjunction with the concentration data.

A review of available particulate monitoring data has indicated that almost all of the reported data are for TSP, not PM 10. Since a knowledge of PM 10 concentrations is of primary interest to support the regulatory process, a method to infer PM 10 information from TSP monitoring data was developed, and is described in Subsection 2.3. This section contains a description of data collected, a description of the process to infer PM 10, PM 5, and PM 2.5 concentrations from monitored TSP concentrations, and a tabular and graphical summary of the results.

2.2 DATA COLLECTED

Several sources of monitoring siting data were considered. These sources included file information in the PEDCo and TRC offices, the coal industry as represented by members of the Technical Advisory Group, and public documents on file in state air quality offices.

The form shown in Table 4 was used to compile the available information. The National Coal Association (NCA) sent letters and the form to several of its members requesting monitoring/siting data. In addition, project resources (time and budget) allowed the study team to visit the Colorado and Wyoming state agencies.

During the visits to the state agencies, and during the review of contractor file data, a large amount of air quality data were initially considered. Certain data were rejected for the following reasons:

1. The data were obtained as part of a background or construction phase air quality monitoring program.

2. The data required to complete Table 4 could not be obtained from file information.

3. The data were still classified as proprietary.

4. Less than 45 data points were available (assumes monitoring every sixth day and EPA requirements for 75 percent data recovery).

5. Monitoring data were collected within 100 meters of an identifiable source and were not representative of areawide air quality. Only limited data were available to apply this criteria.

After application of the rejection criteria outlined above, data from 12 surface coal mines remained. These data were used to develop the TSP to PM 10 concentration algorithm as described in the next subsection.

2.3 PROCEDURE TO INFER PM 10 CONCENTRATIONS FROM MONITORED TSP CONCENTRATIONS

2.3.1 Description of Procedure

This section describes the mechanics of the procedure used to infer PM 10 (and PM 5 and PM 2.5) concentrations from measured TSP concentrations. The foundation of the procedure is to utilize a dispersion model to calculate downwind concentrations of total suspended particulate and concentrations of PM 10 from which the PM 10 mass fraction can be determined. Measured hi-vol TSP concentrations are then multiplied by the appropriate mass fraction to yield PM 10 concentrations. For the purposes of explanation, the procedure can be viewed as composed of five sequential steps:

TABLE 4. PARTICULATE MONITORING INFORMATION

PART A--GENERAL MINE INFORMATION (ONE SHEET PER MINE)

1. Name of mine _____

2. Mine location, county and state _____

3. Average coal production, tons per year _____

4. Area disturbed per year for pit, acres _____

5. Approximate quantity of overburden moved per year, cubic yards _____

6. Method of overburden removal - dragline _____
   - shovel/truck _____
   - scraper _____

7. Dust control measures for haul roads - method _____
   - frequency _____

8. Do you have a monitor quality assurance program - yes _____
   - no _____

9. Map or sketch (please attach) indicating north arrow and scale; mine boundaries; location of pit during monitoring period, permanent haul roads, coal processing plant, and coal storage, monitor locations and monitor number.

10. Name and phone number of contact - name _____
    - phone number _____

11. Above information applicable to what year _____

(continued)

TABLE 4 (continued)

PART B--SPECIFIC MONITOR INFORMATION (ONE SHEET FOR EACH MONITOR LOCATION)

1. Monitor number _____

2. Instrument to measure TSP - hi-vol _____
   - other _____

3. Instrument to measure small particles,

Instrument		Particle size cut-off, μm
° Cascade impactor	_____;	_____
° Size selective inlet	_____;	_____
° Dichotomous	_____;	_____

4. Measured values

	TSP				Size specific			
Year	No. of samples	Annual geom. mean	Second highest 24-hour	20th highest 24-hour*	No. of samples	Annual geom. mean	Second highest 24-hour	20th highest 24-hour*
19__								
19__								
19__								
19__								

* Assumes monitoring every sixth day.

5. If this is a source-impacted site as opposed to a background site,

Source type	Approximate source strength, tons per year of TSP	Distance from monitor
_____	_____	_____
_____	_____	_____
_____	_____	_____

- Collect measured TSP concentrations taken in the vicinity of western surface coal mines; estimate distance from each hi-vol to the major particulate sources at the mine.

- Adopt a universal particle size distribution reasonably expected to simulate the distribution found at the surface mines for which measured hi-vol concentrations are available.

- Using the universal size distribution, model the downwind concentration of various size categories of particulate. Modeled concentrations must be computed at various downwind distances and under reasonably expected meteorological conditions.

- Calculate the ratio of PM 10/TSP concentration (and PM 5/TSP and PM 2.5/TSP) for several downwind distances. These ratios are the multipliers used to infer PM 10 (and PM 5 and PM 2.5) concentrations from the measured TSP concentrations.

- Multiply the ratios by the measured concentrations, taking into account the effect of background concentrations.

Each of these five steps is discussed in more detail below.

Collect Data--

The data collection criteria and procedures were described in Subsection 2.2. Data required for this analysis are the measured TSP concentration, assumed background TSP concentration, mean windspeed, and nominal source to hi-vol distance. The source to hi-vol distance was determined in some instances by averaging the pit to hi-vol and the haul road to hi-vol distances measured from maps; in other instances where experience suggested that one of the sources may be dominant, the source to hi-vol distance was chosen. In all cases the nominal source to hi-vol distance is a representative distance over which particulate matter contributed by the surface mine could be transported to the hi-vol sampler. Annual windspeeds correspond to the closest midpoints of the standard default windspeed categories used in the ISCST dispersion model.

Particle Size Distribution--

The ISC model in its short-term mode (ISCST) simulates gravitational settling and deposition by selectively removing particle mass from the air as a function of downwind distance and meteorological conditions. Just as in the atmosphere, larger particles settle out faster in the ISCST model than do smaller particles. As the dust plume moves downwind, the mass of airborne

large particles is depleted sooner than the mass of smaller particles, with the result that the overall particle size distribution changes with distance.

Derivation of particle size distributions by mass fraction is discussed in Subsection 4.2.1. The distributions are shown in Table 5.

TABLE 5. PARTICLE SIZE DISTRIBUTIONS BY MASS FRACTION (μm)

Basin	Fraction less than					
	2.5	5.0	10	15	20	30
Powder River	0.020	0.096	0.287	0.447	0.567	1.000
Green River/ Hams Fork	0.020	0.082	0.234	0.365	0.474	1.000
San Juan	0.024	0.103	0.289	0.442	0.557	1.000
Universal	0.021	0.094	0.270	0.418	0.533	1.000

Once the size distribution had been established, the settling velocity and reflection coefficient were determined using standard methods described in the Industrial Source Complex (ISC) Dispersion Model User's Guide. These computations are summarized in Tables 6 and 7.

TABLE 6. COMPUTATION OF SETTLING VELOCITY[a]

Particle diameter size range, microns	Mean radius, cm	Settling velocity, m/s
0-2.5	6.25×10^{-5}	0.000093
2.5-5.0	1.88×10^{-4}	0.000837
5.0-10.0	3.75×10^{-4}	0.003347
10.0-15.0	6.25×10^{-4}	0.009297
15.0-20.0	8.75×10^{-4}	0.018223
20.0-30.0	1.25×10^{-3}	0.037189

[a] Settling velocity determined from the equation.

$$V_s = \frac{2}{9} \frac{\rho g r^2}{\mu}$$

where g = acceleration due to gravity, 980 cm/s^2

ρ = particle density, 2.0 gm/cm^3

μ = air viscosity, 1.83×10^{-4} gm/cm-s

TABLE 7. REFLECTION COEFFICIENTS

Particle diameter size range, microns	Reflection coefficient
0-2.5	1.0
2.5-5.0	0.99
5.0-10.0	0.86
10.0-15.0	0.77
15.0-20.0	0.73
20.0-30.0	0.65

Model Concentrations--

The most important step in the inferential method is to use the ISCST model to calculate the mass fraction of PM 10 to TSP concentration. The mass fraction of PM 10 particulate to TSP concentration is given by:

$$F_{PM10} = \frac{\chi_{PM\ 10}}{\chi_{TSP}}$$

where χ = concentration

F = mass fraction

PM 10 = particulate smaller than 10 microns

TSP = total suspended particulate

The mass fraction, $F_{PM\ 10}$, is a function of initial particle size distribution, windspeed, stability class, and downwind distance. The value of $F_{PM\ 10}$ is not a function of wind direction, cross-wind distance, or initial particle emission rate. To compute the values of $F_{PM\ 10}$ at various windspeeds, stability classes, and downwind distances, the ISCST model was used to simulate coincident groundlevel area sources of 0.75 kilometers on a side. Each source, representing a discrete particle size range, was assumed to emit 10×10^{-6} grams/meter^2-second of particulate matter within one of the six particle size categories shown in

Table 6. The ISCST model was exercised to simulate all possible combinations of National Weather Service windspeed categories (0-3, 4-6, 7-10, 11-16, 17-21, and greater than 21 knots) and atmospheric stability classes (A, B, C, and D); concentrations within each of the six particle size categories were computed by the ISCST model at downwind distances of 1,000, 1,500, 2,000, 3,000, 4,500, 7,000, 10,000, and 20,000 meters. The tabular output of the model is displayed in Appendix A. Each entry in Appendix A is the groundlevel concentration that would be detected downwind of an area source emitting 10×10^{-6} grams/ meter^2-second, at the indicated windspeed, stability class, and downwind distance.

Compute Mass Ratios--

The next step was to weight the modeled concentrations by the assumed universal particle size distribution by multiplying each concentration within a given particle size range by its appropriate emission mass fraction. The computations involved in this step for "D" stability and two windspeed categories are included in Appendix B. The rationale for this weighting is straightforward: each area source used in the model was assumed to emit at a constant 10×10^{-6} grams/meter^2-second, but in fact the emission rate of particulate matter within a given size range is given by the universal distribution illustrated in Table 5. Finally, the $F_{PM\ 10}$, $F_{PM\ 5}$, and $F_{PM\ 2.5}$ ratios are calculated by summing the total particulate mass within a given size range, and dividing that by the TSP concentration. These computations also appear in Appendix B.

As an example of how the inferential mass fraction method is employed, consider the computation of $F_{PM\ 10}$ at 1,000 meters downwind distance, under "D" stability at a windspeed of 4.30 meters/second. The modeling results in Appendix A indicate that the groundlevel concentrations induced by an emission rate of 10×10^{-6} grams/meter^2-second are as shown in Table 8.

TABLE 8. GROUNDLEVEL CONCENTRATIONS AT 1,000 METERS, "D" STABILITY, AND 4.30 METERS/SECOND WINDSPEED

Particle size range, microns	Concentration, $\mu g/m^3$
0-2.5	42.77
2.5-5	42.57
5-10	39.84
10-15	38.02
15-20	37.31
20-30	35.87

Note that the concentration for progressively larger particle sizes decreases. This result is as expected since more of the

larger particles settle out before reaching the receptor 1,000 meters away.

Next, the relative frequency of occurrence of each of the particle size categories at the source is taken into account by dividing the concentrations in Table 8 by 10×10^{-6} grams/meter^2-second, and multiplying the concentration by the previously adopted universal particle size distribution. This step is illustrated in Table 9.

TABLE 9. RELATIVE GROUNDLEVEL CONCENTRATIONS AT 1,000 METERS, "D" STABILITY, AND 4.30 METERS/SECOND WINDSPEED

Particle size, microns	Modeled concentration, χ/Q, s/m	Universal mass fraction	Relative concentration, $\mu g/m^3$
0-2.5	4.28	0.021	0.090
2.5-5	4.26	0.073	0.311
5-10	3.98	0.176	0.700
10-15	3.80	0.148	0.562
15-20	3.73	0.115	0.429
20-30	3.59	0.467	1.676

Finally, the fraction of particulate mass smaller than 10 microns can be determined by summing the relative concentrations with diameters less than 10 microns, and dividing this quantity by the total concentration less than 30 microns. Specifically, the relative concentrations smaller than 10 microns from Table 9 is given by 0.090 + 0.311 + 0.700 = 1.101; the total relative concentration is 3.768. The ratio of these numbers, 1.101/3.768 = 0.292, represents the fraction of PM 10 particulate matter contained in the total suspended particulate. Ths finding suggests that at a distance of 1,000 meters from a dust source, under "D" stability and with a windspeed of 4.30 meters/second, 29 percent of the TSP collected by a hi-vol is smaller than 10 microns in diameter. In a manner similar to the above computation, the fraction of 2.5 micron and 5 micron diameter particulate was computed for a number of downwind distances. Although it was initially intended that a separate fraction would be computed for each possible combination of stability class and windspeed, this proved to be unnecessary since the annual average windspeeds at the candidate mines covered only two windspeeds classes, namely 4-6 knots and 7-10 knots. Furthermore, it was decided that the most prevalent stability class, "D", would adequately represent stability conditions for the annual time periods (Turner 1969). This is believed to be a reasonable approximation for the purposes of this study. The influence on the study results of assuming D stability is examined in Subsection 2.5.

Multiply Ratios by Measured Concentrations--

The 2.5, 5.0, and 10 micron particle concentration fractions of TSP are computed in Appendix B and are plotted in Figures 3 and 4 as a function of downwind distance. As expected, the ratio of small particle mass to total suspended particulate increases with distance since the larger particles are removed from the plume with distance. Eventually, the mass fraction of small particulate to TSP would equal 1.0, but Figures 3 and 4 present the mass fraction only as far as 20 kilometers. Figures 3 and 4 provide the means to determine small particle concentrations directly given downwind distance, meteorological conditions, and measured TSP concentration.

2.3.2 Application of Inferential Method

The ISCST model was configured so that the southwest corner of the area sources coincided with origin of the grid system, whereas the distances reported for each of the hi-vol concentrations were measured from the nearest edge of the mine, pit, or haul road.

It was also necessary to account for background concentration. Since the inferential method discussed so far only applies to particulate matter contributed by the surface mine, measured hi-vol concentrations must be corrected by first subtracting background concentration. Similarly, the final determination of PM 10 (or PM 5 or PM 2.5) must also be corrected by adding a representative background value of PM 10 (or PM 5 or PM 2.5). Combining these corrections yields the following equations:

PM 10 = [(Measured TSP- background TSP)(PM 10 fraction)] + PM 10 background

PM 5 = [(Measured TSP- background TSP)(PM 5 fraction)] + PM 5 background

PM 2.5 = [(Measured TSP- background TSP)(PM 2.5 fraction)] + PM 2.5 background

The PM 10 background concentration assumed for all of the mines was generated from preliminary data from the 1980-1981 Western Energy Resource Development Area (WERDA) study. During this 2-year study, 72-hour concentration measurements of PM 2.5 and PM 15 were taken twice a week. Data were collected at 40 remote sites in 8 different states. A limited data summary was available for 22 of these sites. However, there was insufficient information in this summary to select a background concentration specific to each mine. Consequently, with the concurrence of the EPA project officer, the mean PM 2.5 and PM 15 concentrations were calculated for the limited data from the 22 sites. Because specific data were not available, it was necessary to use these

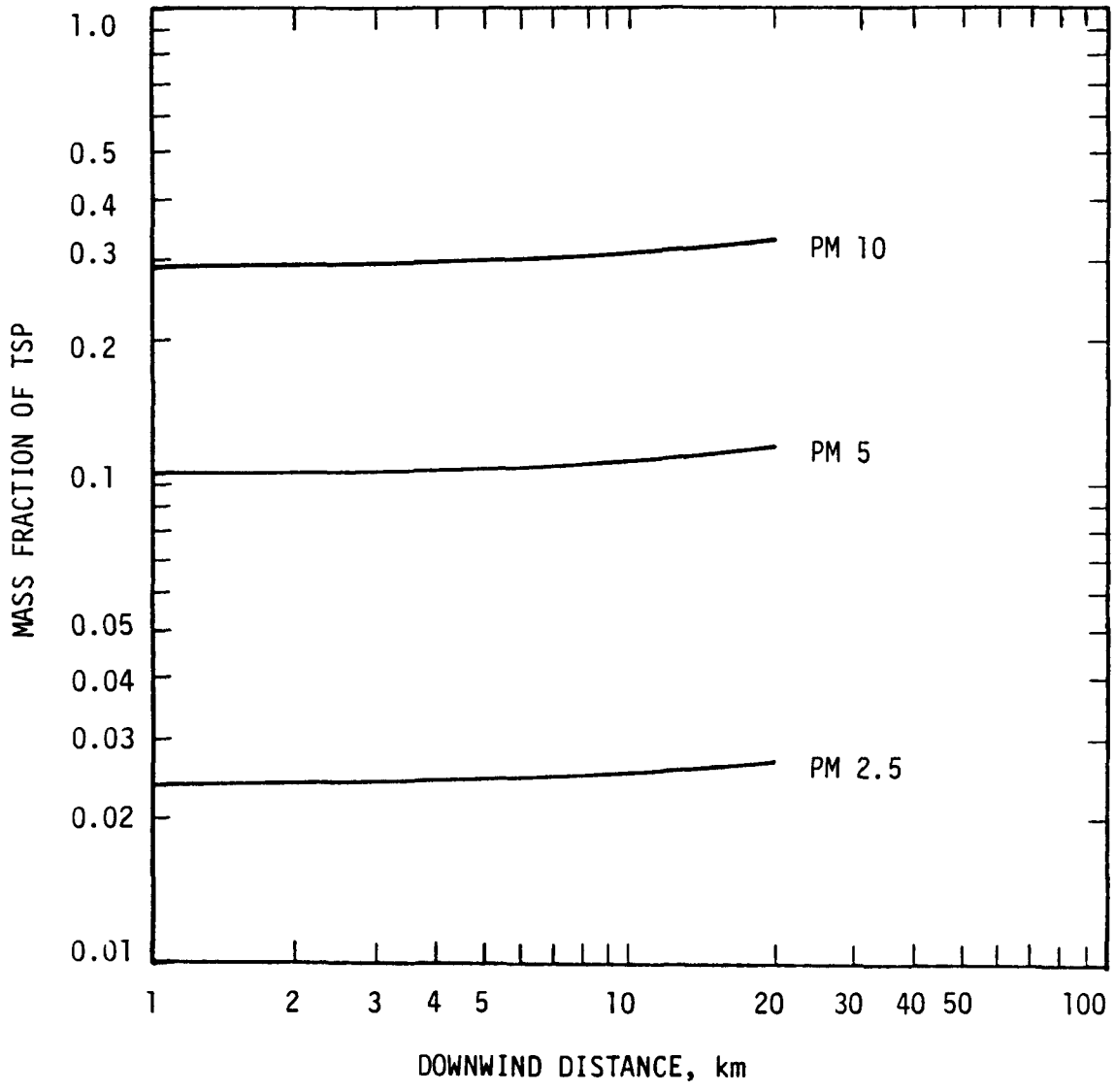

Figure 3. Mass fraction of TSP, stability class D, 4.3 m/s.

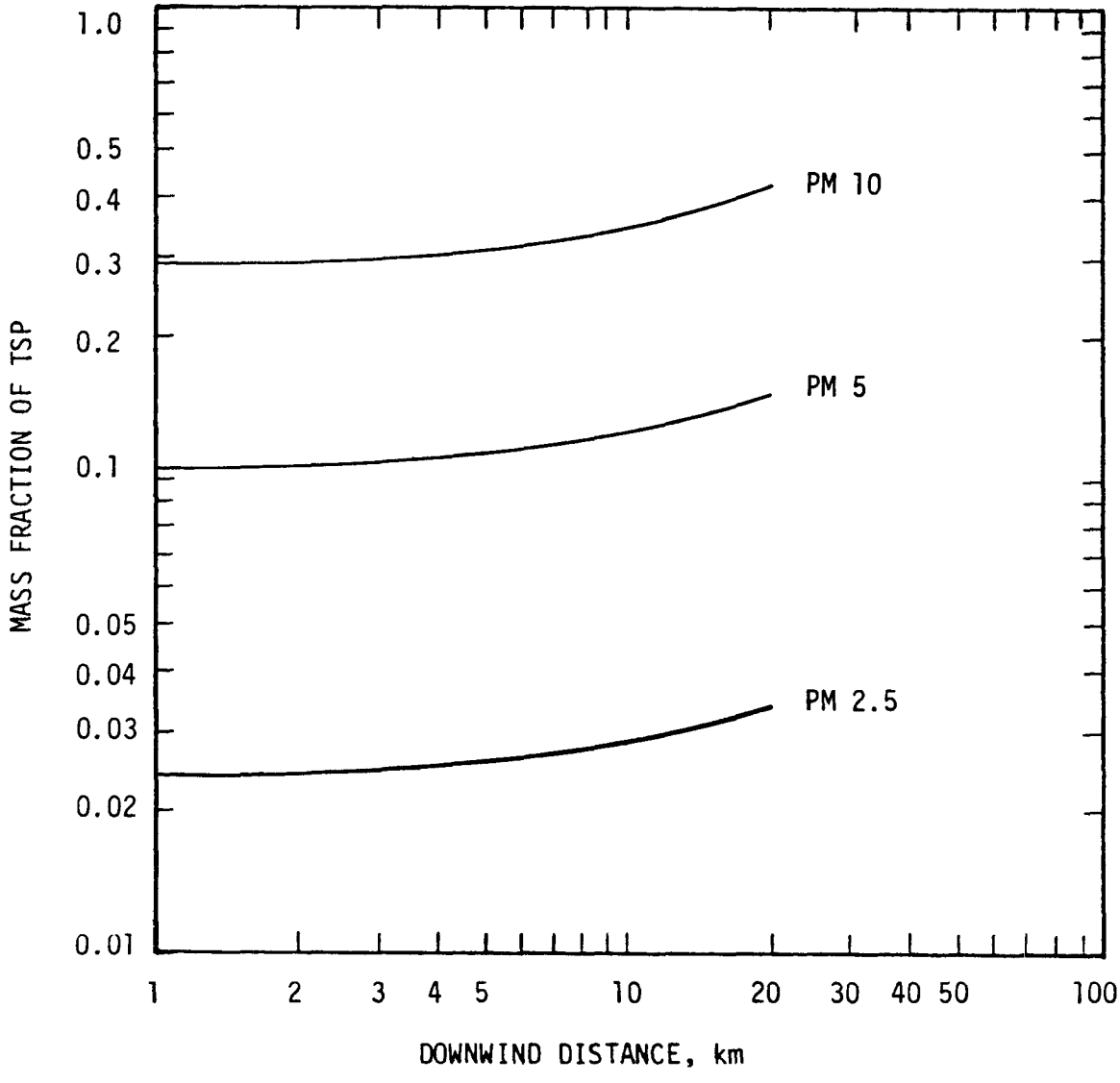

Figure 4. Mass fraction of TSP, stability class D, 2.5 m/s.

means as an approximation for use with the measured TSP background concentrations. The average concentrations for PM 2.5 and PM 15 were 4 $\mu g/m^3$ and 11 $\mu g/m^3$. Background concentrations for PM 5 and PM 10 of 6 $\mu g/m^3$ and 9 $\mu g/m^3$ were obtained by interpolating between PM 2.5 and PM 15 and assuming a lognormal distribution of concentrations between 2.5 μm and 15 μm.

2.4 DESCRIPTION OF RESULTS

2.4.1 Annual Average Concentrations

The application of the inferential method, using the two corrections above, is detailed in Table 10. The right-hand columns in that table present the inferred PM 2.5, PM 5, and PM 10 concentrations. The annual average TSP and inferred PM 10 concentrations are shown graphically on Figures 5 to 32. Each figure is drawn to the same scale and orientation and shows the approximate location of the monitor, mine boundary, pit, main haul road and coal preparation plant. Limited production data are also presented.

The inferred concentrations of PM 10, PM 5, and PM 2.5 presented in Table 10 are generally very small, and only slightly greater than the respective background concentrations. At the distances examined (938 m to 5605 m), the mine contribution (inferred concentration - background concentration) of PM 10, PM 5 and PM 2.5 ranges from 0.2 to 19.8, 0.1 to 7.2, and <0.1 to 1.6 $\mu g/m^3$ respectively. Obviously, the background concentration is the dominant factor in almost all cases.

2.4.2 Second-Highest 24-Hour Concentrations

The procedure for inferring PM 10 concentrations from TSP monitored values was also applied to second-highest 24-hour TSP monitored values. The background concentrations assumed in the analysis of annual average concentrations were carried forward to this analysis. The results appear in Table 11. The table indicates the monitored TSP second-highest 24-hour concentration, the 70 and 90 percentile values, and the inferred PM 10 second-highest 24-hour concentration. At the distances examined (938 m to 5605 m), the mine contribution (inferred contribution-background concentration) of PM 10, PM 5, and PM 2.5 ranges from 9.9 to 89.4, 3.6 to 32.4, and 0.8 to 7.3 $\mu g/m^3$, respectively. In contrast to the annual average PM 10 concentrations where the background PM 10 concentration was usually the dominant factor, the mine contribution is the dominant factor in the 24-hour averaging period. Also of note is that the short-term PSD Class II increment of 37 $\mu g/m^3$ was violated by the inferred PM 10 concentration outside mine boundaries.

TABLE 10. INFERRED PM 10 ANNUAL AVERAGE CONCENTRATIONS

Mine No.	Monitor No.	Nominal distance to dust source, m	Annual avg. w/s, m/s	Measured TSP geom. mean conc., μg/m³	No. of samples	Assumed background TSP conc., μg/m³	Assumed background conc., μg/m³			Inferred conc., μg/m³		
							PM 2.5	PM 5	PM 10	PM 2.5	PM 5	PM 10
1	1	2789	4.3	16.7	55	15	4	6	9	4.0	6.2	9.5
2	1	2145	4.3	32.7[a]	54	15	4	6	9	4.4	7.9	14.2
	2	3352	4.3	27.8[a]	61	15	4	6	9	4.3	7.4	12.8
	3	2145	4.3	24.4[a]	59	15	4	6	9	4.2	7.0	11.8
	4	938	4.3	41.8[a]	61	15	4	6	9	4.6	8.8	16.8
3	1	4237	4.3	18.0[a]	50	15	4	6	9	4.1	6.3	9.9
	2	3272	4.3	27.2	54	15	4	6	9	4.3	7.3	12.6
4	1	2548	4.3	25.6	60	15	4	6	9	4.2	7.1	12.1
	2	2548	4.3	26.7	59	15	4	6	9	4.3	7.2	12.4
	3	2789	4.3	21.5	58	15	4	6	9	4.2	6.7	10.9
5	1	2628	4.3	24.6[a]	60	15	4	6	9	4.2	7.0	11.8
	2	2950	4.3	25.0[a]	55	15	4	6	9	4.2	7.1	11.9
6	1	1984	4.3	33.2	47	15	4	6	9	4.4	7.9	14.3
	2	1340	4.3	51.7	56	15	4	6	9	4.9	9.9	19.7
	3	1180	4.3	27.9	58	15	4	6	9	4.3	7.4	12.8
7	1	1437	4.3	38.2[a]	60	15	4	6	9	4.6	8.4	15.8
	2	3883	4.3	45.5	61	15	4	6	9	4.7	9.3	18.0
	3	2049	4.3	27.1	61	15	4	6	9	4.3	7.3	12.5
8	1	1984	4.3	37.5[a]	55	15	4	6	9	4.5	8.4	15.6
	2	4237	4.3	22.2[a]	60	15	4	6	9	4.2	6.8	11.1

(continued)

TABLE 10 (continued)

Mine No.	Monitor No.	Nominal distance to dust source, m	Annual avg. w/s, m/s	Measured TSP geom. mean conc., μg/m³	No. of samples	Assumed background TSP conc., μg/m³	Assumed background conc., μg/m³			Inferred conc., μg/m³		
							PM 2.5	PM 5	PM 10	PM 2.5	PM 5	PM 10
9	1	2145	4.3	57.7	49	18	4	6	9	4.9	10.2	20.6
	2	1260	4.3	85.7	56	18	4	6	9	5.6	13.2	28.8
	3	2467	4.3	46.0	57	18	4	6	9	4.7	9.0	17.2
10	1	5605	2.5	22.6	62	22	4	6	9	4.0	6.1	9.2
11	1	2950	4.3	29.1	58	15	4	6	9	4.3	7.5	13.1
	2	4076	4.3	32.8	59	15	4	6	9	4.4	7.9	14.3
	3	5042	4.3	20.6	56	15	4	6	9	4.1	6.6	10.7
	4	2789	4.3	36.7	59	15	4	6	9	4.5	8.3	15.4
	5	4076	4.3	32.1	54	15	4	6	9	4.4	7.8	14.1
	6	2950	4.3	32.4	59	15	4	6	9	4.4	7.9	14.1
12	1	2306	4.3	39.0[a]	45	20	4	6	9	4.4	8.0	14.6
	2	4237	4.3	26.0[a]	49	20	4	6	9	4.1	6.6	10.8
	3	2065	4.3	36.0[a]	54	20	4	6	9	4.4	7.7	13.7

[a] Monitor located outside mine boundaries.

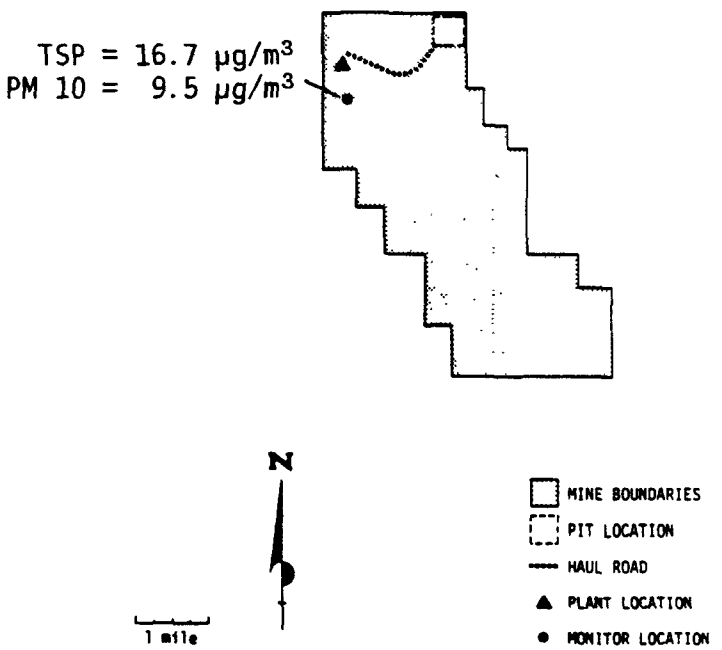

Location: Campbell County, Wyoming
Coal production: 10.0×10^6 tons/year
Area disturbed: 50 acres/year
Method of overburden removal: shovel/truck
Quantity of overburden moved: 16.0×10^6 yard^3/year
Method of dust control for haul roads: water

Figure 5. Annual average monitored TSP and calculated PM 10 concentrations, northeast Wyoming, Mine 1.

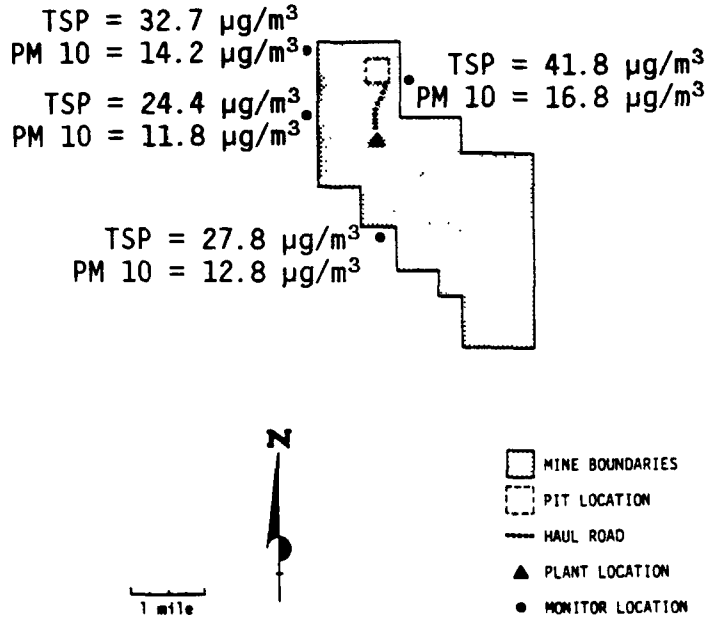

Location: Campbell County, Wyoming
Coal production: 8.0×10^6 tons/year
Area disturbed: 65 acres/year
Method of overburden removal: shovel/truck
Quantity of overburden moved: 3.3×10^6 yard^3/year
Method of dust control for haul roads: water

Figure 6. Annual average monitored TSP and calculated PM 10 concentrations, northeast Wyoming, Mine 2.

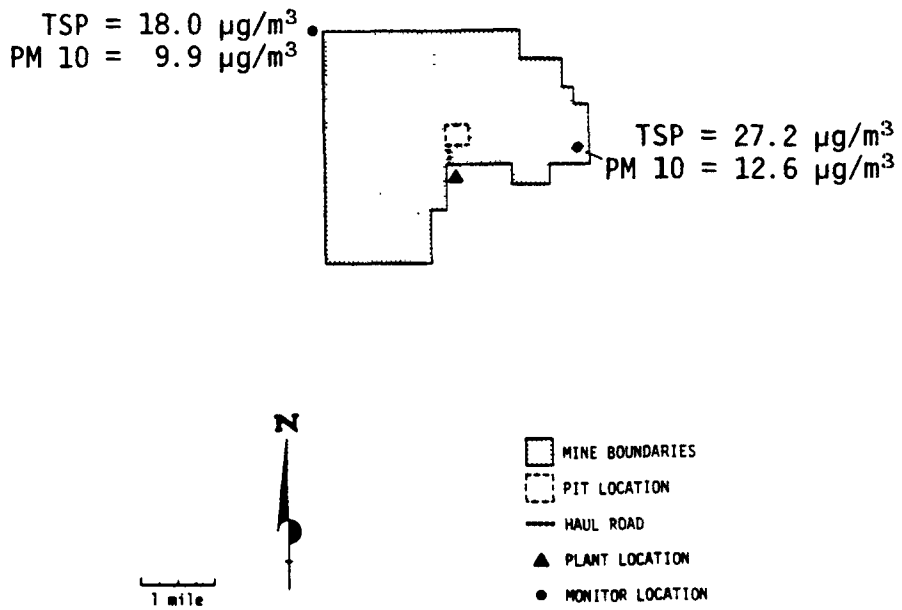

Location: Campbell County, Wyoming
Coal production: 8.2×10^6 tons/year
Area disturbed: 109 acres/year
Method of overburden removal: shovel/truck
Quantity of overburden moved: 5.8×10^6 yard^3/year
Method of dust control for haul roads: water

Figure 7. Annual average monitored TSP and calculated PM 10 concentrations, northeast Wyoming, Mine 3.

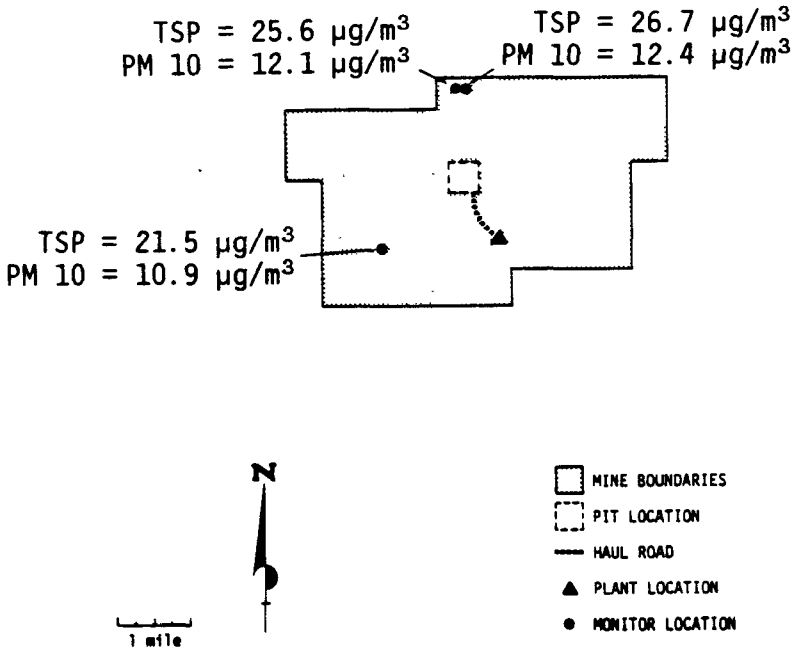

Location: Campbell County, Wyoming
Coal production: 2.0×10^6 tons/year
Area disturbed: 133 acres/year
Method of overburden removal: shovel/truck
Quantity of overburden moved: 3.5×10^6 yard^3/year
Method of dust control for haul roads: water/coherex

Figure 8. Annual average monitored TSP and calculated PM 10 concentrations, northeast Wyoming, Mine 4.

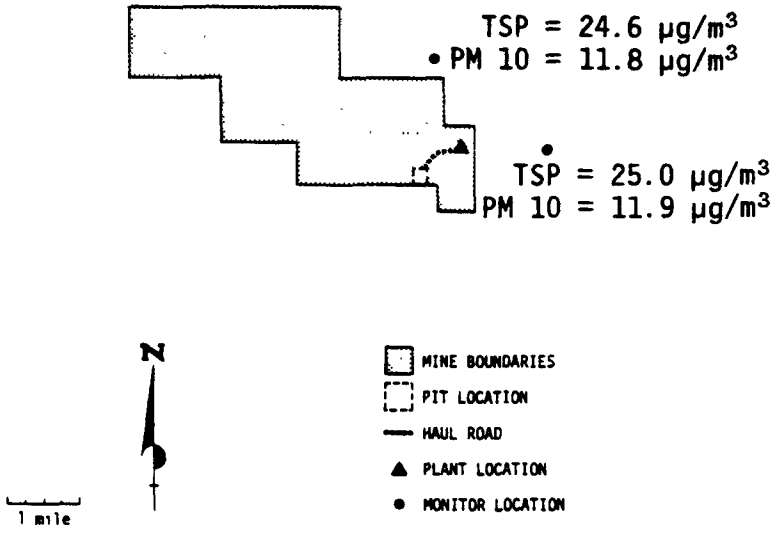

Location: Campbell County, Wyoming
Coal production: 4.5×10^6 tons/year
Area disturbed: 98 acres/year
Method of overburden removal: shovel/truck
Quantity of overburden moved: 5.7×10^6 yard^3/year
Method of dust control for haul roads: water

Figure 9. Annual average monitored TSP and calculated PM 10 concentrations, northeast Wyoming, Mine 5.

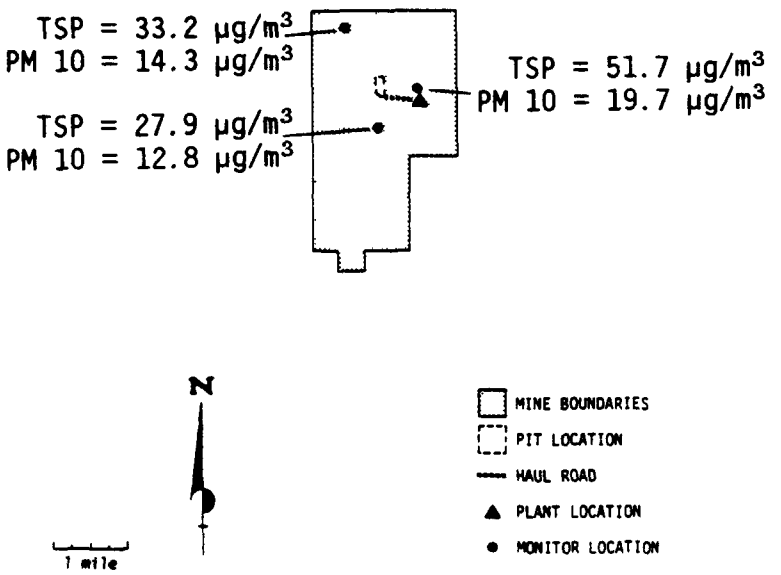

Location: Campbell County, Wyoming
Coal production: 6.5×10^6 tons/year
Area disturbed: 63 acres/year
Method of overburden removal: shovel/truck
Quantity of overburden moved: 9.6×10^6 yard^3/year
Method of dust control for haul roads: water

Figure 10. Annual average monitored TSP and calculated PM 10 concentrations, northeast Wyoming, Mine 6.

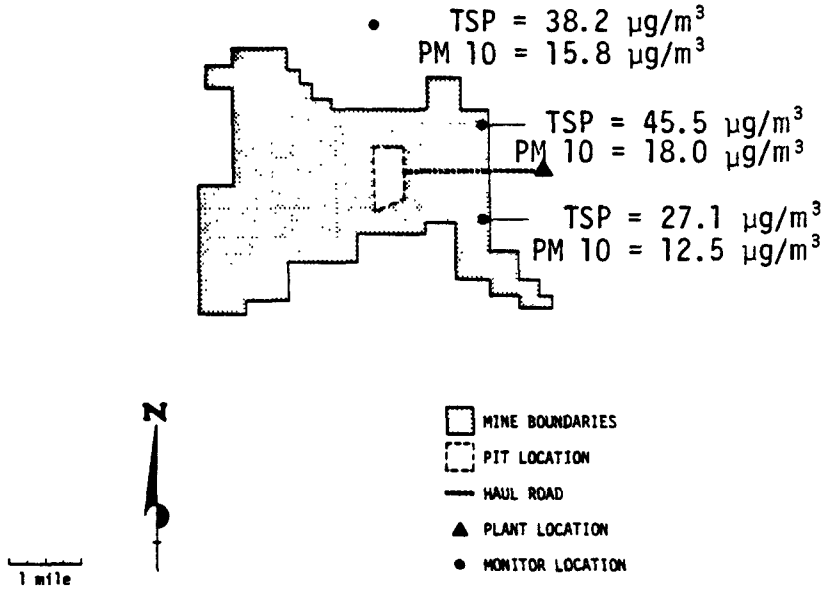

Location: Campbell County, Wyoming
Coal production: 16.0 x 10^6 tons/year
Area disturbed: 197 acres/year
Method of overburden removal: shovel/truck
Quantity of overburden moved: 23.6 x 10^6 yard^3/year
Method of dust control for haul roads: water

Figure 11. Annual average monitored TSP and calculated PM 10 concentrations, northeast Wyoming, Mine 7.

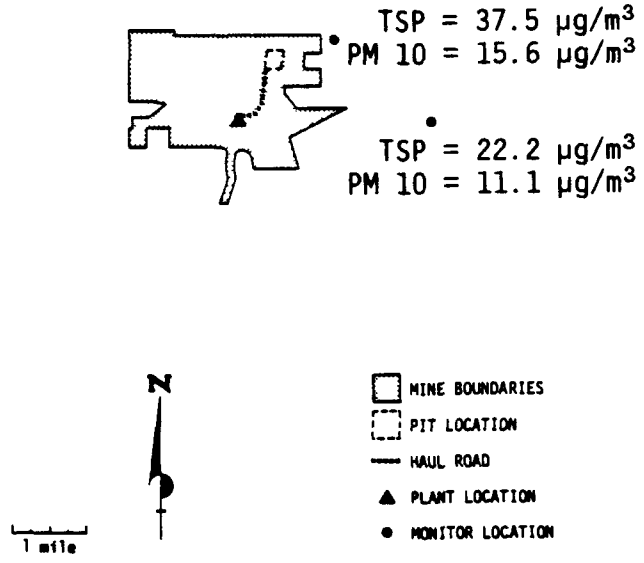

Location: Sheridan County, Wyoming
Coal production: 4.3×10^6 tons/year
Area disturbed: 58.6 acres/year
Method of overburden removal: scraper/shovel-truck
Quantity of overburden moved: 13.7×10^6 yard^3/year
Method of dust control for haul roads: water

Figure 12. Annual average monitored TSP and calculated PM 10 concentrations, northeast Wyoming, Mine 8.

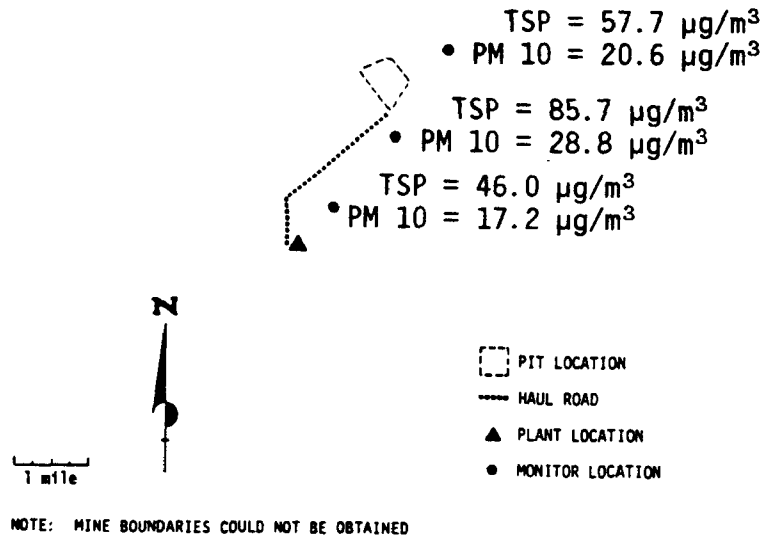

Location: Sweetwater County, Wyoming
Coal production: 2.4×10^6 tons/year
Area disturbed: 164 acres/year
Method of overburden removal: dragline
Quantity of overburden moved: 12.0×10^6 yard^3/year
Method of dust control for haul roads: water

Figure 13. Annual average monitored TSP and calculated PM 10 concentrations, southwest Wyoming, Mine 9.

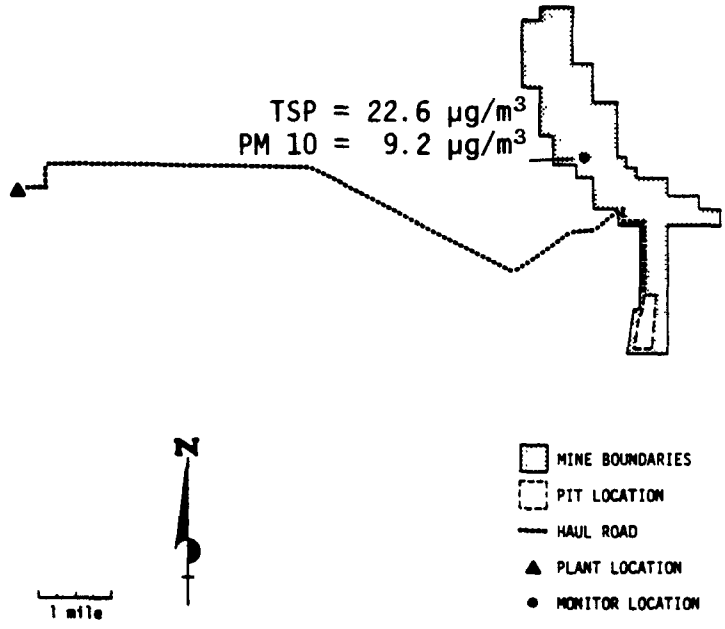

Location: Jackson County, Colorado
Coal production: 0.7×10^6 tons/year
Area disturbed: 15 acres/year
Method of overburden removal: scraper
Quantity of overburden moved: 4.5×10^6 yard^3/year
Method of dust control for haul roads: water

Figure 14. Annual average monitored TSP and calculated PM 10 concentrations, northwest Colorado, Mine 10.

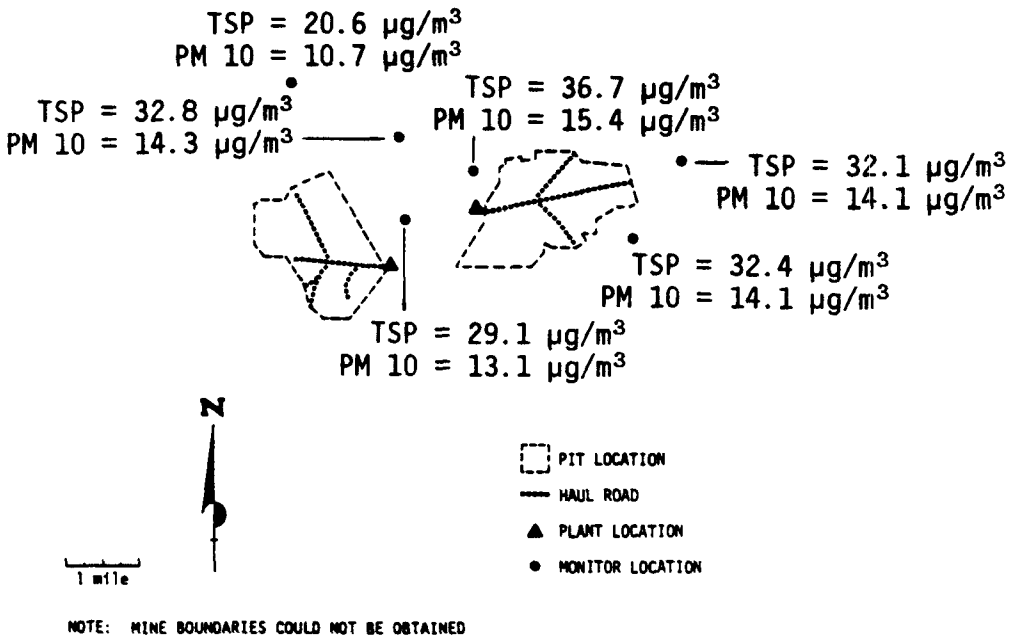

Location: Big Horn County, Montana
Coal production: 13.9 x 10^6 tons/year
Area disturbed: 4333 acres/year
Method of overburden removal: dragline/shovel-truck/scraper
Quantity of overburden moved: 44.8 x 10^6 $yard^3$/year
Method of dust control for haul roads: water/lignon sulfonate

Figure 15. Annual average monitored TSP and calculated PM 10 concentrations, southeast Montana, Mine 11.

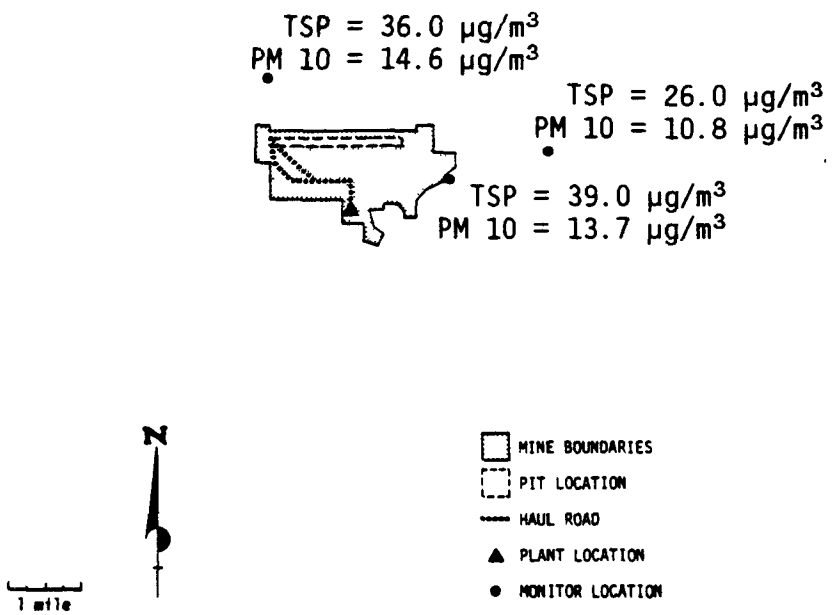

Location: McLean County, North Dakota
Coal production: 3.1×10^6 tons/year
Area disturbed: 207 acres/year
Method of overburden removal: dragline
Quantity of overburden moved: 19.5×10^6 yard^3/year
Method of dust control for haul roads: water

Figure 16. Annual average monitored TSP and calculated PM 10 concentrations, western North Dakota, Mine 12.

TABLE 11. INFERRED PM 10 SECOND-HIGHEST 24-HOUR CONCENTRATIONS

County	State	Mine No.	Monitor No.	Measured TSP second highest 24-hour conc., μg/m³	Percentile		Inferred conc., μg/m³		
					70	90	2.5	5.0	10
Campbell	Wyo.	1	1	49	32	44	4.8	9.6	18.9
Campbell	Wyo.	2	1	72[a]	48	66	5.4	12.1	25.7
			2	79[a]	43	63	5.5	12.8	27.9
			3	64[a]	32	51	5.2	11.2	23.4
			4	119[a]	53	82	6.5	17.0	39.4
Campbell	Wyo.	3	1	56[a]	30	44	5.0	10.4	21.2
			2	149	42	74	7.2	20.3	48.8
Campbell	Wyo.	4	1	75	37	65	5.4	12.4	26.6
			2	92	38	71	5.8	14.2	31.6
			3	59	32	45	5.0	10.7	21.9
Campbell	Wyo.	5	1	93[a]	39	67	5.9	14.3	31.8
			2	59[a]	37	56	5.0	10.7	21.9
Campbell	Wyo.	6	1	103	48	76	6.1	15.3	34.7
			2	150	76	114	7.2	20.3	48.4
			3	97	42	70	6.0	14.7	32.9
Campbell	Wyo.	7	1	149[a]	56	123	7.2	20.2	48.1
			2	138	73	106	7.0	19.3	45.3
			3	79	37	55	5.5	12.8	27.7
Sheridan	Wyo.	8	1	180[a]	56	103	8.0	23.5	57.2
			2	76[a]	27	55	5.5	12.6	27.2
Sweetwater	Wyo.	9	1	224	93	165	8.9	28.0	69.4
			2	324	127	259	11.3	38.4	98.4
			3	128	59	102	6.6	17.8	41.2
Jackson	Colo.	10	1	99	b	b	6.0	15.1	33.6
McLean	N. Dak.	12	1	126[a]	b	b	6.5	17.3	40.0
			2	133[a]	b	b	6.7	18.2	42.6
			3	151[a]	b	b	7.1	19.9	47.3

[a] Outside mine boundary.
[b] Data not provided.

2.5 ERROR ANALYSIS AND ASSUMPTIONS

A number of assumptions were made in the derivation and application of the inferential analysis method, and these should be recognized and discussed along with the findings. The foremost assumption, and one which has the greatest potential for influencing inferred PM 10, PM 5, and PM 2.5 concentrations, is the choice of background concentrations. It is conceivable that the background concentrations of PM 10 could be equal to the TSP background, that is to say, it is possible that all of the measured background concentration could be comprised of particulate matter smaller than 10 microns in diameter. Where this is the case, then inferred PM 10 concentrations in Table 10 could increase by as much as 13 $\mu g/m^3$ over and above those reported. Additionally, the actual background TSP concentrations could be appreciably higher than those assumed, particularly during worst-case short-term periods, with the same effect of increasing the inferred concentrations. The magnitude of these background concentrations is simply not known to the degree of accuracy desirable. Additional monitoring is required to quantify background concentrations by particle size under different conditions.

A second major assumption in the inferential method is that the ISCST model correctly describes the transport and deposition of particulate matter. If the model simulates different size categories with varying degrees of accuracy, then the resulting mass fractions would be altered.

The adoption of the universal particle size distribution could also have a pronounced impact on inferred concentrations. While Table 5 suggests that the distribution of particle mass within specific size categories is reasonably uniform, the mass fraction of PM 10 assumed in the universal distribution could be in error by 100 percent. This error in turn would induce errors in the inferred concentrations in Table 10 of roughly a factor of two.

In light of the uncertainties associated with the calculation of the inferred concentrations presented in Table 10, these findings should be viewed as preliminary.

Three of the assumptions employed in the procedure were examined more closely. These assumptions are the imposition of fixed windspeeds, fixed D stability class, and the choice of nominal receptor to source distances.

The influence of windspeeds can be examined by comparing the curves in previously cited Figures 3 and 4. These curves have been replotted on Figure 17. The PM 10 fraction is higher at the lower windspeed since the lower windspeed would cause comparitively greater deposition of larger particles per unit of distance. The

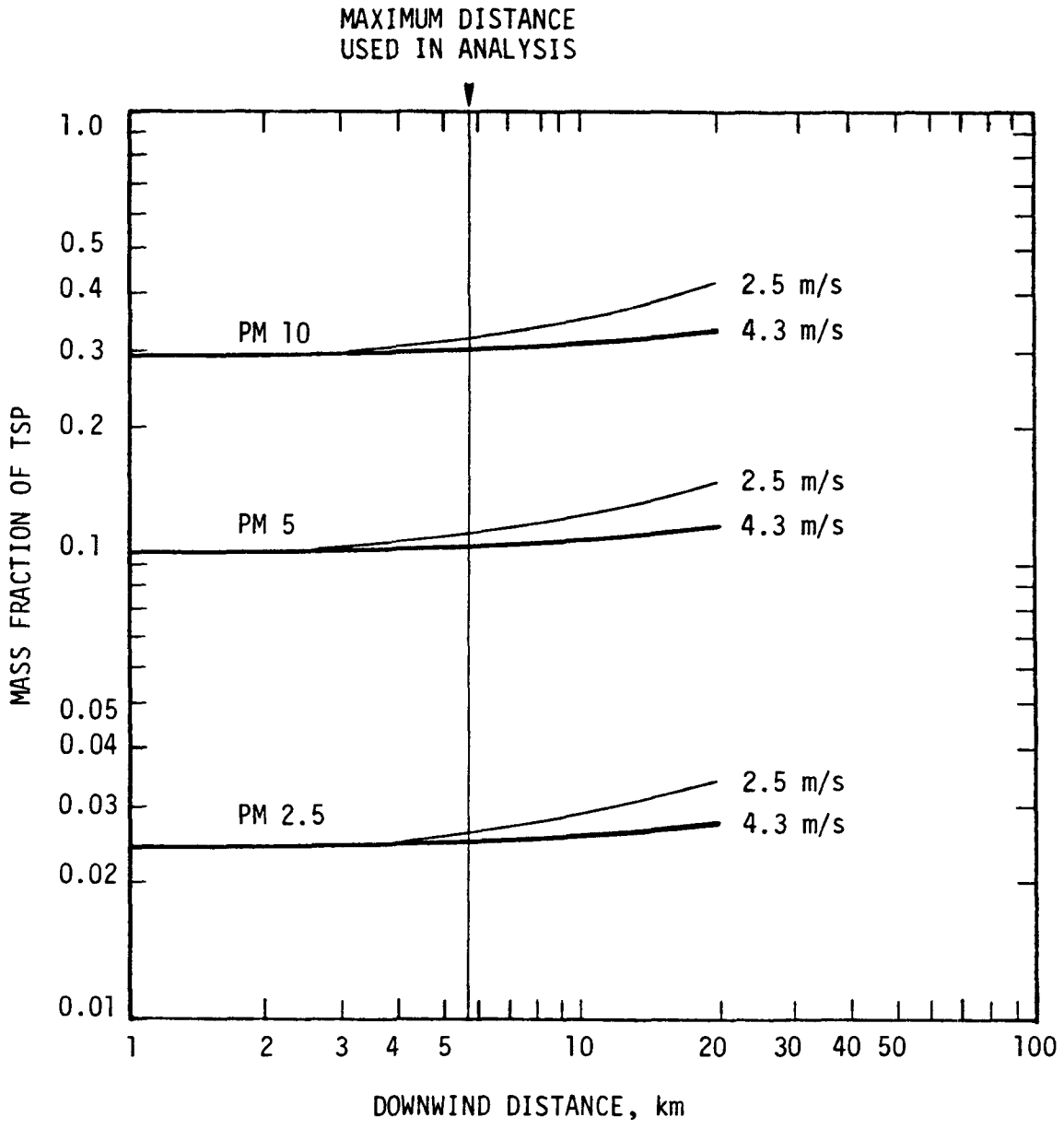

Figure 17. Sensitivity of the procedure to infer PM 10 concentrations to windspeed assumptions.

distance between the curves represents only a portion of the possible range of values because extreme low or high windspeeds would widen the range. However, using an average annual windspeed would still cause the correct values to lie toward the center of the range. Assumption of a lower windspeed than 4.3 m/s would increase the PM 10 fraction of the TSP concentration.

The influence of the D stability assumption was examined by overlaying the curves from Figure 3 with curves derived assuming A stability and 4.3 m/s windspeed. For PM 10, one additional curve was derived for B stability and 4.3 m/s windspeed. These curves are shown in Figure 18.

The three curves for PM 10 exemplify one of the limitations of the ISC model. As discussed in the ISC user's manual, modeling results for A stability are unreliable at distances greater than 3.0 kilometers. As shown in Figure 18 the model overestimates the amount of deposition at large downwind distances. The PM 10 comparison of B and D stability classes demonstrates that less deposition would occur in the unstable case (B stability). However, at the maximum downwind distance considered in this study (6 km), the results show that there is very little difference between the curves for B and D stability.

The influence of the nominal receptor distance appears to be slight. The mass fractions change only slightly with downwind distance, so that an error of many hundred meters in the distance probably only has a negligible effect on concentrations.

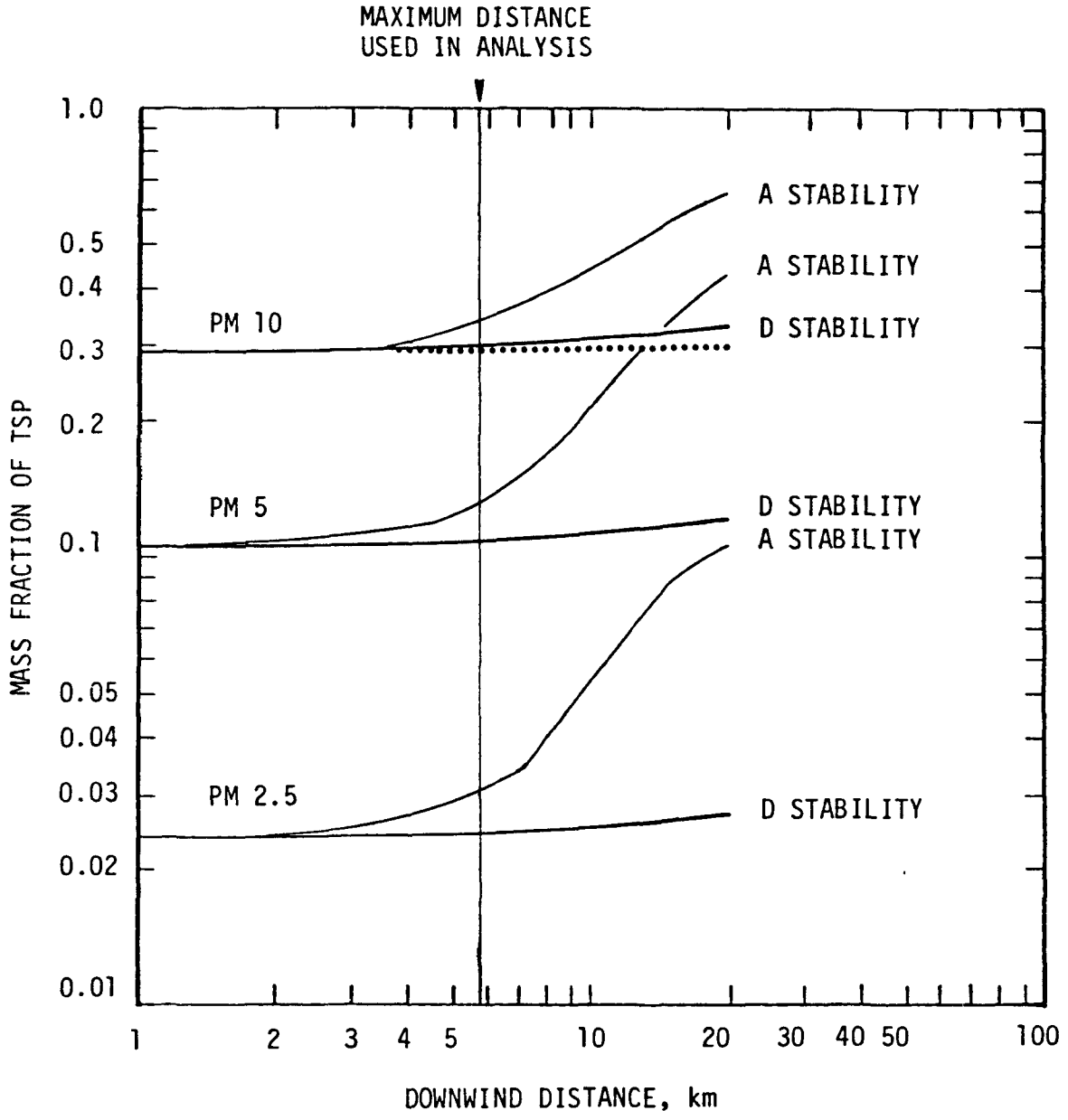

Figure 18. Sensitivity of the procedure to infer PM 10 concentrations to stability class assumptions.

SECTION 3.0

CHARACTERIZATION OF PM 10 AND TSP AIR QUALITY AROUND WESTERN SURFACE COAL MINES USING PREVIOUS MODELING STUDIES

3.1 BACKGROUND

Particulate dispersion modeling for TSP has been performed in support of the mine permitting process in many cases. Unfortunately, there are no standardized procedures for performing the analyses. Previous modeling efforts have utilized various lists of sources, emission factors, and models.

The two most common sets of emission factors used are from the EPA Region VIII Interim Policy Paper (EPA 1978a) and from the State of Wyoming (1979). Each set of factors is a combination of individual emission factors gathered from several references. The Interim Policy Paper (IPP) considers more emission sources than the Wyoming factors. The IPP factors are intended for use with a model particulate fallout function, whereas the Wyoming factors are not.

Two variations of the Climatological Dispersion Model (CDM) have been predominately used for long-term modeling. The State of Wyoming had adapted CDM into a CDM-W model and specified its use for permit work. Therefore, all recent permit work in Wyoming has been performed with the CDM-W model, and it has also found some application in Colorado and Montana. Over 40 modeling studies have been performed for the Bureau of Land Management (BLM) in connection with their tract leasing program. For this work, various modifications, including insertion of a fallout function, have been made to the CDMQC model.

Short-term modeling in support of the mine permitting process is performed much less frequently. The State of Wyoming does not require short-term modeling. Elsewhere, the PAL (EPA 1978b), RAM (EPA 1978c), or Valley (EPA 1977) models have been used. In general, short-term modeling is considered less accurate than long-term modeling because of the difficulty in defining short-term activity patterns, emissions, and meteorological parameters.

In all mine permitting cases, the analyses have been performed for the Total Suspended Particulate (TSP) size range. Modeling for <30 μm particle sizes has been limited to a few theoretical studies which are reviewed in Subsection 3.3.

This section describes several previous modeling studies and illustrates TSP concentrations around surface coal mines with concentration isopleths. In a change from the original scope of work, no effort was made to adjust or evaluate the previous modeling studies. This change was approved by the contract officer.

3.2 PREVIOUS MODELING STUDIES

Three geographical areas were selected for the study of model applications in this section, and the scenario analysis in Section 4.0. The three geographical areas are the Powder River Basin (near Gillette, Wyoming); the San Juan Basin (near Farmington, New Mexico); and the Green River/Hams Fork Basin (southern Wyoming, and northwest Colorado). These basins are shown in Figure 19.

Reasons for selecting these basins are:

1. The three areas are major coal producing areas with significantly different characteristics relating to total production level, mining methods, and meteorological conditions.

2. The characteristics of the three areas are suitable for use in the scenario analysis described later in Section 4.0. The new EPA emission factors were derived from field testing in two of the three basins. The factors are more accurate when applied to areas with emission factor correction parameters in the same range over which testing occurred.

3. The study team has a significant amount of file data for these three basins allowing for a more efficient use of project resources.

4. Focusing on three areas allows the study team to reduce the number of variables involved in the task to a more manageable level.

The primary source for the modeling studies analyzed in this section was the study team files. Project resources allowed a limited search for additional modeling studies from the Technical Advisory Group and the State of Wyoming.

3.2.1 Single Mine Modeling

The results of 16 previous modeling studies from the Powder River Basin and the Green River/Hams Fork Basin were collected. No previous San Juan modeling studies were available from the resources listed above.

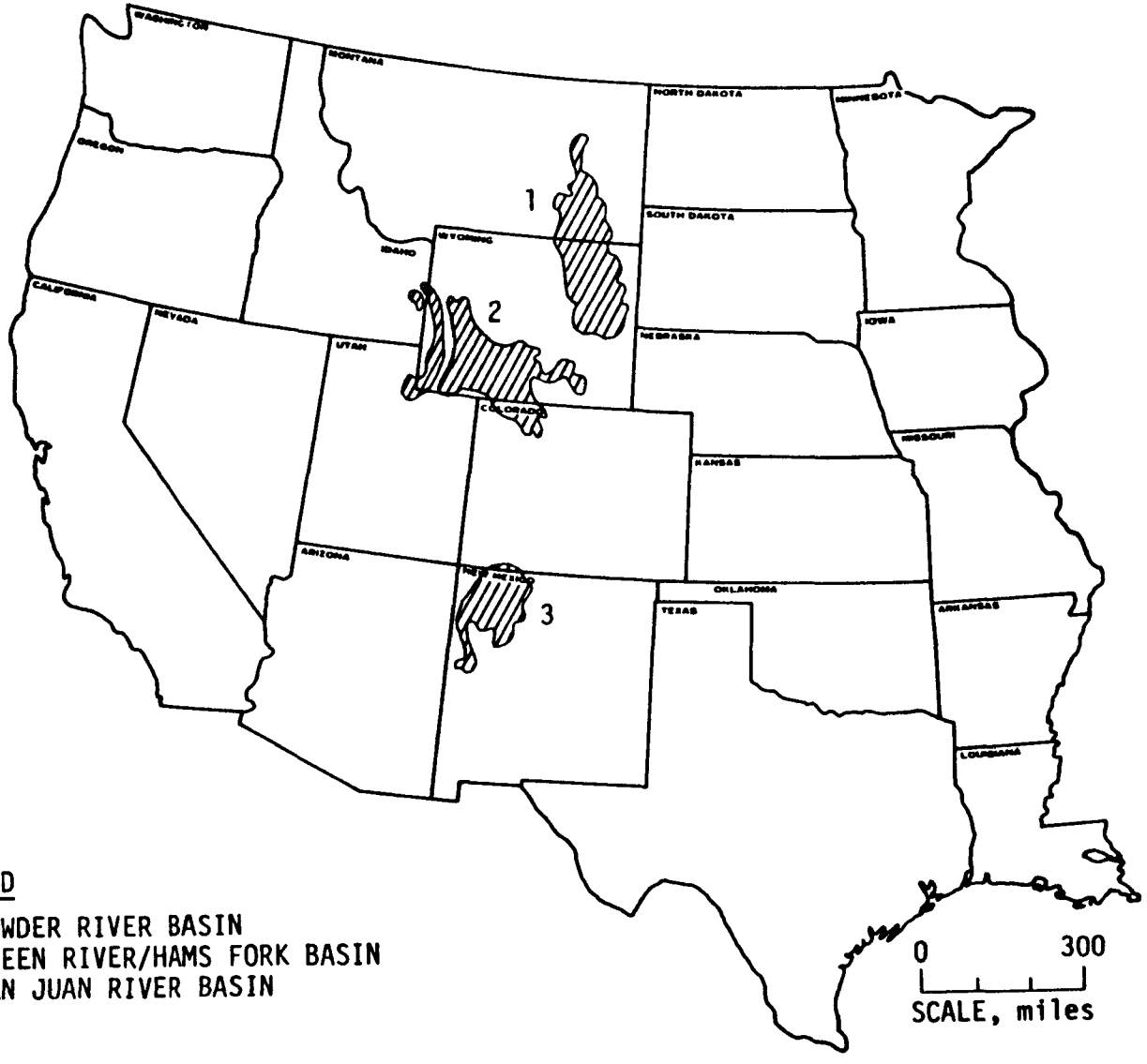

LEGEND

1. POWDER RIVER BASIN
2. GREEN RIVER/HAMS FORK BASIN
3. SAN JUAN RIVER BASIN

Figure 19. Geographical areas of interest.

The mining sources and associated emission factors used in the previous analyses are presented in Table 12 along with the particulate control efficiencies applied. The emission factors and control efficiencies were taken from Region VIII Interim Policy Paper (EPA 1978). Utilizing the source list and emission factors presented in Table 12, along with estimated activity parameters, an emission inventory was prepared for each mine. These data, along with spatial parameters, were entered into a modified version of CDMQC. The climatological data used for input to the model were obtained from the nearest National Weather Service station in the form of a stability rose (STAR) deck.

Details of the CDMQC model and its application can be found in the literature and are not repeated here. However, the following modifications to the model were made for a more accurate reflection of conditions in a surface coal mine.

1. Insertion of a fallout function for point and area sources.

2. Specification of a 10-meter release height.

3. Removal of a model provision to alter stability classes in a manner that reflects urban conditions.

The results of the modeling exercises were plotted on a series of isopleth maps as shown in Figures 20 through 35. Each figure contains a variety of information. All of the figures are drawn to the same scale and orientation. At the bottom of the figures, the mine location, and limited activity data are presented along with the calculated annual TSP emissions. Also shown are the mine boundary, approximate locations of the coal preparation facility, main haul road, and active pit. The isopleth concentrations represent TSP emissions including fugitive dust. Two concentrations are shown for each isopleth, the predicted concentration due to the mine and the predicted concentration plus a background concentration.

The 16 mines presented in the figures represent annual coal productions ranging from 225,000 tons to 23,200,000 tons. Calculated emission estimates range from 154 tons to 4443 tons. The maximum TSP concentration predicted at the mine boundary varies from 1 to 50 $\mu g/m^3$. As shown in the figures, this value is highly dependent on the location of the mining activity with respect to the mine boundary.

In all cases, the predicted concentration decreases rapidly as the distance from the mining activity increases. The 1 $\mu g/m^3$ isopleth is predicted to occur within 4 miles of all mine boundaries.

TABLE 12. PARTICULATE EMISSION FACTORS AND CONTROL EFFICIENCIES USED IN PREVIOUS MODELING STUDIES

Mining activity	Powder River Basin		Green River/Hams Fork		Units
	Emission factor	Percent control	Emission factor	Percent control	
Topsoil removal - scraper	0.38		0.38		lb/yd^3
Scraper travel - topsoil	5.62	50	a		lb/VMT
Truck dump - topsoil	0.002		a		lb/ton
Stockpile - topsoil	0.48	85	a		ton/ac-yr
Overburden drilling	1.5		1.5		lb/hole
Overburden blasting	85.3		85.3		lb/blast
Overburden removal					
Shovel/truck	0.37		a		lb/yd^3
Dragline	a		0.053		lb/yd^3
Haul trucks - overburden	5.62	50	a		lb/VMT
Truck dump - overburden	0.002		a		lb/ton
Overburden stockpile	0.48	85	0.38	85	ton/ac-yr
Dozer - overburden	16		16		lb/h
Coal drilling	0.22		0.22		lb/hole
Coal blasting	72.4		72.4		lb/blast
Coal loading	0.0035		0.12		lb/ton
Haul trucks - coal	9.37	85	13.6	85	lb/VMT
Truck dump - coal	0.007	90	0.007	85	lb/ton
Crushing - coal	0.08	99	0.08	99	lb/ton
Screening - coal	0.10	99	0.10	99	lb/ton
Conveyor - coal	0.20	99	0.20	90	lb/ton
Coal storage	32.9		16.9-33.1		ton/ac-yr
Open piles				50	
Silos		99		99	
Coal loadout	0.0002	99	0.0002	95	lb/ton
Road maintenance - grader	32	50	32		lb/h
Access road travel	6.56	99	5.3	99	lb/VMT
Exposed areas	0.48	75	0.38	40	ton/ac-yr
Miscellaneous haul road travel	6.56	85	a		lb/VMT

[a] Not applicable.

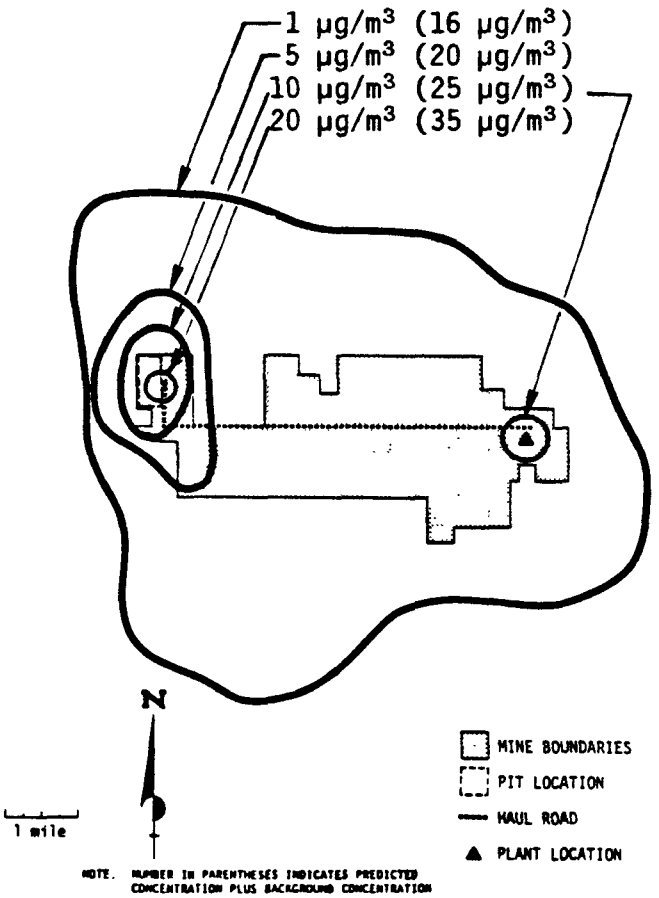

Location: Campbell County, Wyoming
Coal production: 23.2 x 10^6 tons/year
Area disturbed: 183 acres/year
Method of overburden removal: shovel/truck
Quantity of overburden moved: 29.5 x 10^6 yard^3/year
Method of dust control for haul roads: water/chemical
Annual TSP emissions: 2832 tons

Figure 20. Annual average modeled TSP concentrations Powder River Basin, Mine 1.

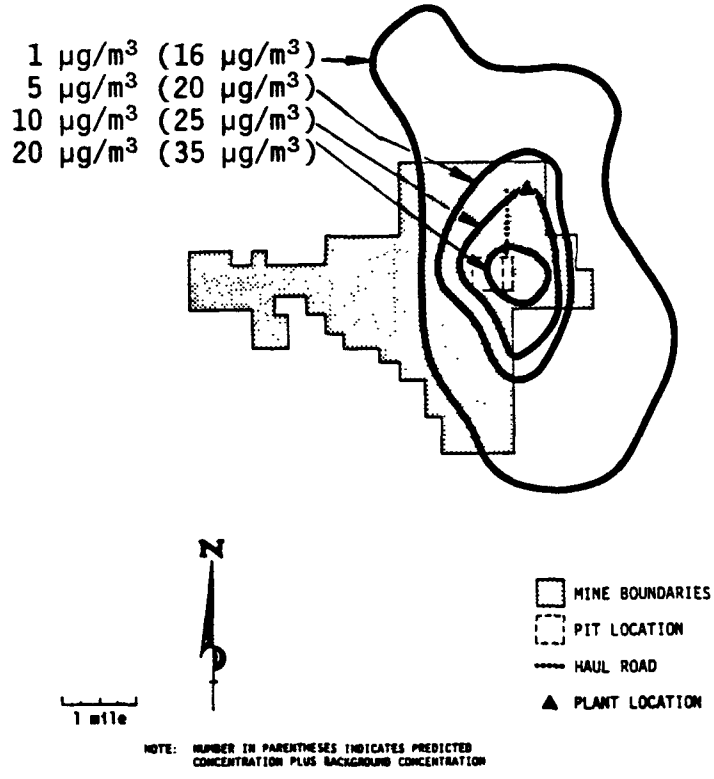

Location: Campbell County, Wyoming
Coal production: 14.0 x 10^6 tons/year
Area disturbed: 91 acres/year
Method of overburden removal: dragline/shovel-truck
Quantity of overburden moved: 40.9 x 10^6 $yard^3$/year
Method of dust control for haul roads: water/chemical
Annual TSP emissions: 2126 tons

Figure 21. Annual average modeled TSP concentrations Powder River Basin, Mine 2.

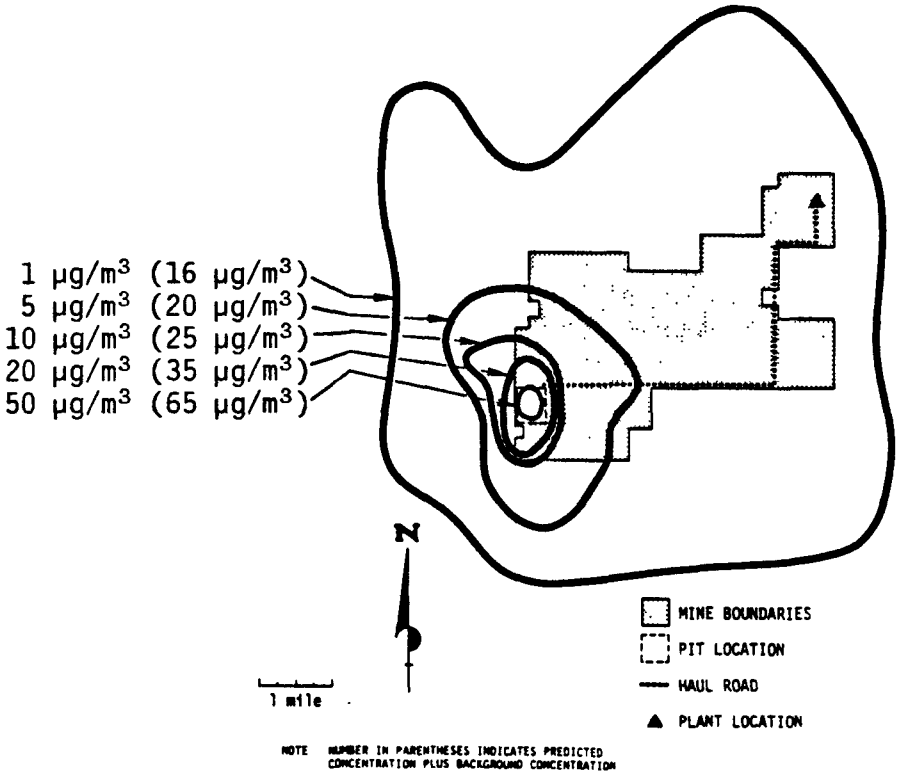

Location: Campbell County, Wyoming
Coal production: 18.2 x 10^6 tons/year
Area disturbed: 190 acres/year
Method of overburden removal: shovel/truck
Quantity of overburden moved: 61.3 x 10^6 yard^3/year
Method of dust control for haul roads: water/chemical
Annual TSP emissions: 4443 tons

Figure 22. Annual average modeled TSP concentrations Powder River Basin, Mine 3.

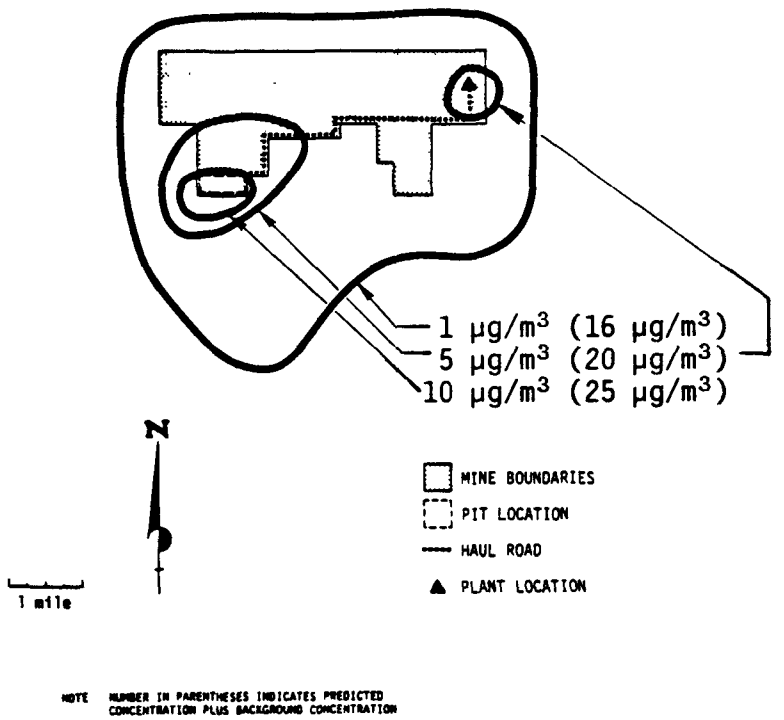

Location: Campbell County, Wyoming
Coal production: 12.8 x 10^6 tons/year
Area disturbed: 125 acres/year
Method of overburden removal: shovel/truck
Quantity of overburden moved: 23.9 x 10^6 $yard^3$/year
Method of dust control for haul roads: water/chemical
Annual TSP emissions: 1947 tons

Figure 23. Annual average modeled TSP concentrations Powder River Basin, Mine 4.

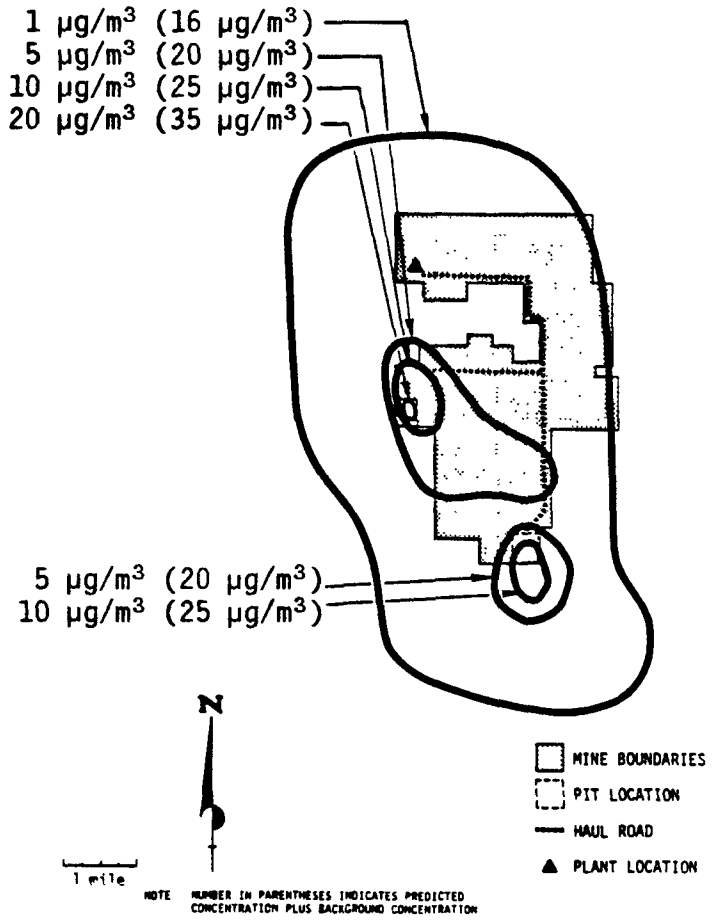

Location: Campbell County, Wyoming
Coal production: 12.5 x 10^6 tons/year
Area disturbed: 242 acres/year
Method of overburden removal: shovel/truck
Quantity of overburden moved: 39.9 x 10^6 $yard^3$/year
Method of dust control for haul roads: water/chemical
Annual TSP emissions: 3073 tons

Figure 24. Annual average modeled TSP concentrations Powder River Basin, Mine 5.

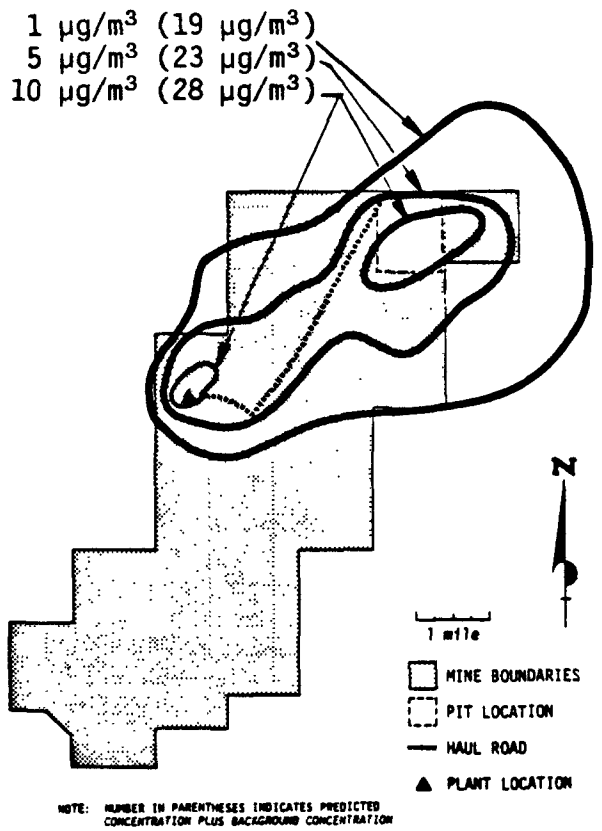

Location: Carbon County, Wyoming
Coal production: 4.0×10^6 tons/year
Area disturbed: 135 acres/year
Method of overburden removal: dragline
Quantity of overburden moved: 15.6×10^6 yard^3/year
Method of dust control for haul roads: water/chemical
Annual TSP emissions: 1278 tons

Figure 25. Annual average modeled TSP concentrations Green River/Hams Fork Basin, Mine 6.

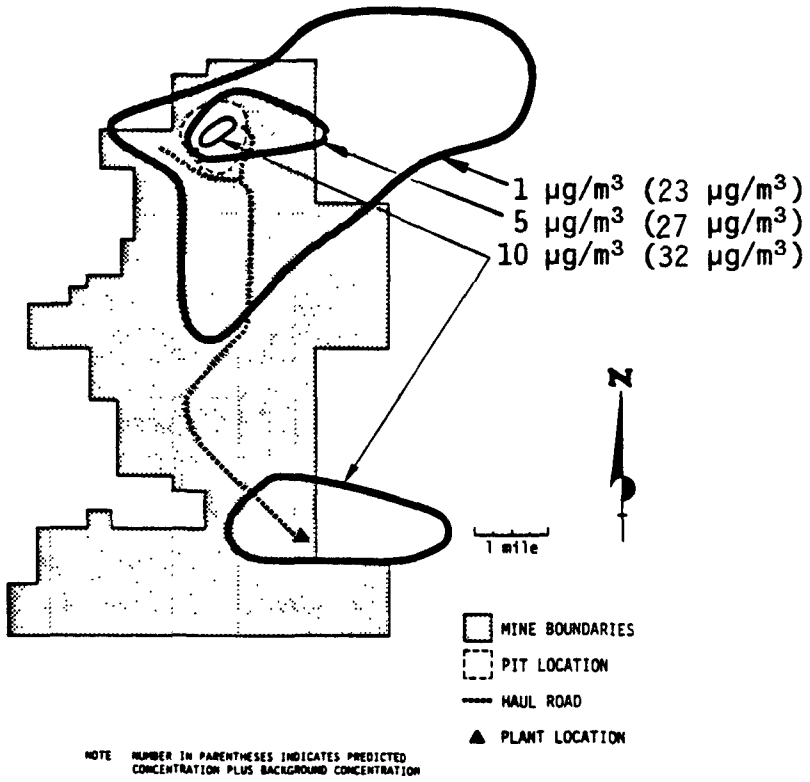

Location: Carbon County, Wyoming
Coal production: 2.7×10^6 tons/year
Area disturbed: 117 acres/year
Method of overburden removal: dragline
Quantity of overburden moved: 14.8×10^6 yard^3/year
Method of dust control for haul roads: water/chemical
Annual TSP emissions: 1075 tons

Figure 26. Annual average modeled TSP concentrations Green River/Hams Fork Basin, Mine 7.

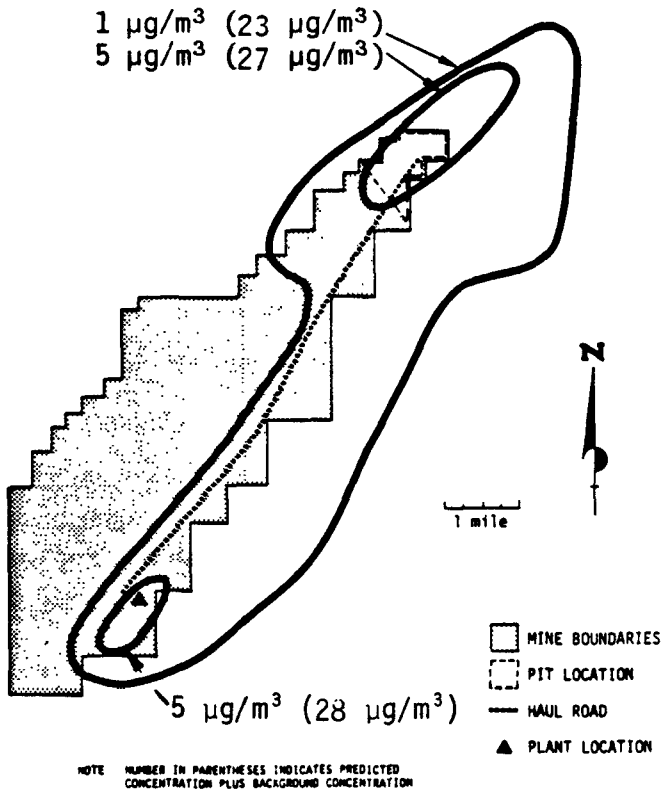

Location: Carbon County, Wyoming
Coal production: 1.7×10^6 tons/year
Area disturbed: 134 acres/year
Method of overburden removal: dragline
Quantity of overburden moved: 12.7×10^6 yard^3/year
Method of dust control for haul roads: water/chemical
Annual TSP emissions: 1179 tons

Figure 27. Annual average modeled TSP concentrations Green River/Hams Fork Basin, Mine 8.

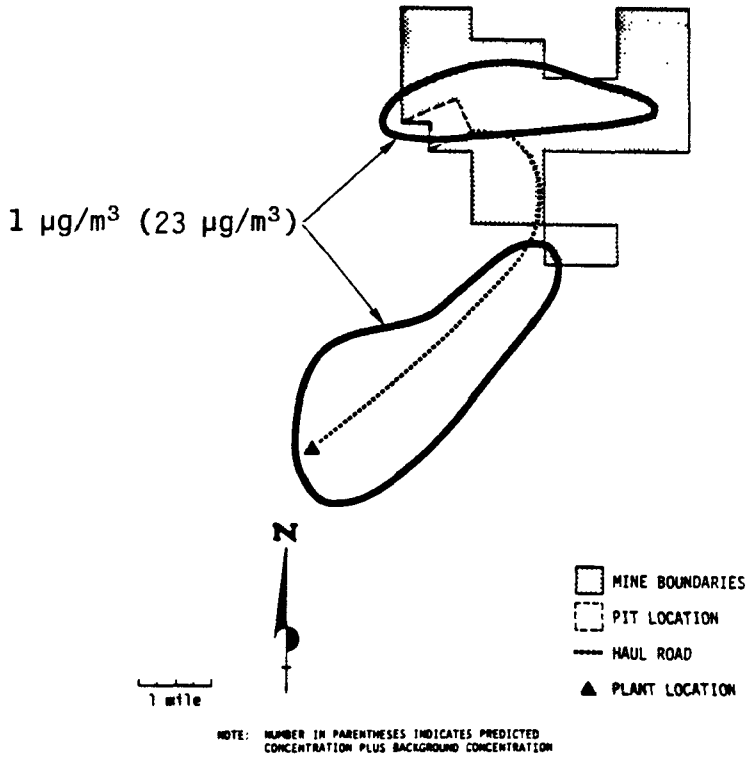

Location: Carbon County, Wyoming
Coal production: 1.0×10^6 tons/year
Area disturbed: 44 acres/year
Method of overburden removal: dragline
Quantity of overburden moved: 5.6×10^6 yard^3/year
Method of dust control for haul roads: water/chemical
Annual TSP emissions: 632 tons

Figure 28. Annual average modeled TSP concentrations Green River/Hams Fork Basin, Mine 9.

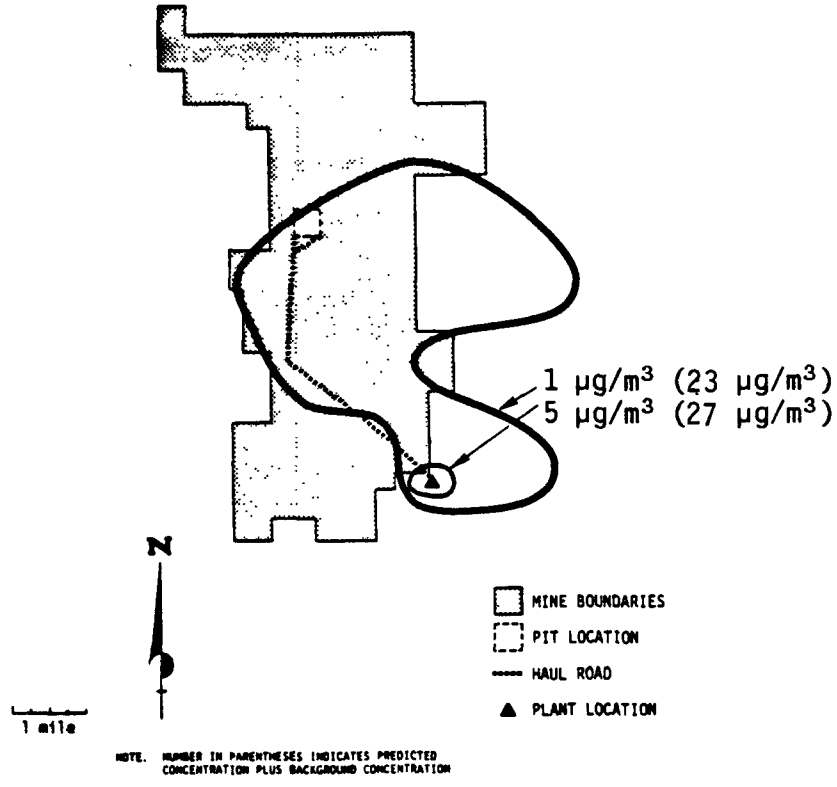

Location: Carbon County, Wyoming
Coal production: 2.1×10^6 tons/year
Area disturbed: 91 acres/year
Method of overburden removal: dragline
Quantity of overburden moved: 11.6×10^6 yard^3/year
Method of dust control for haul roads: water/chemical
Annual TSP emissions: 901 tons

Figure 29. Annual average modeled TSP concentrations Green River/Hams Fork Basin, Mine 10.

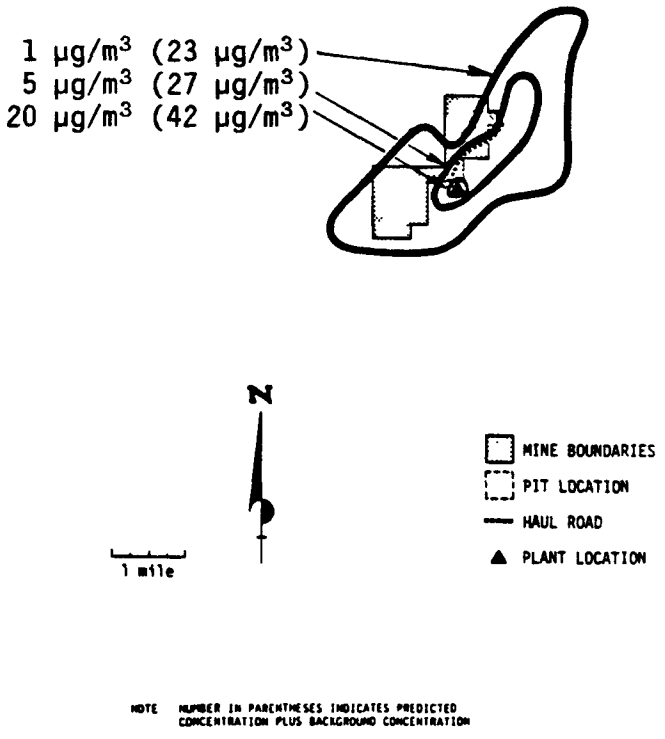

Location: Moffat County, Colorado
Coal production: 1.4×10^6 tons/year
Area disturbed: 27 acres/year
Method of overburden removal: dragline
Quantity of overburden moved: 5.4×10^6 yard^3/year
Method of dust control for haul roads: water/chemical
Annual TSP emissions: 474 tons

Figure 30. Annual average modeled TSP concentrations Green River/Hams Fork Basin, Mine 11.

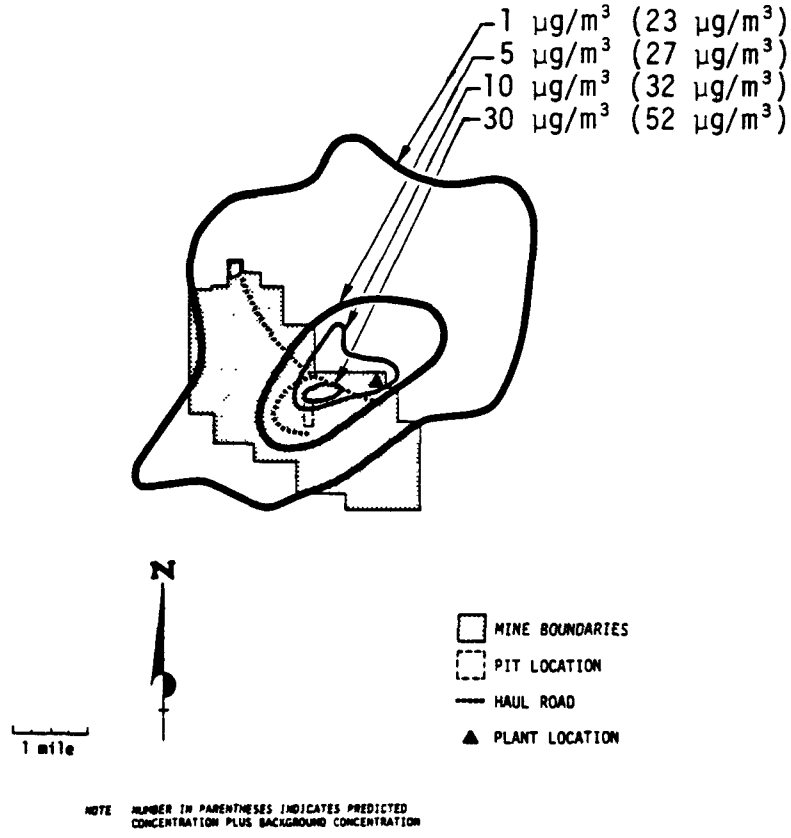

Location: Moffat County, Colorado
Coal production: 1.9×10^6 tons/year
Area disturbed: 60 acres/year
Method of overburden removal: draglines/truck-shovel
Quantity of overburden moved: 9.6×10^6 yard^3/year
Method of dust control for haul roads: water/chemical
Annual TSP emissions: 1039 tons

Figure 31. Annual average modeled TSP concentrations Green River/Hams Fork Basin, Mine 12.

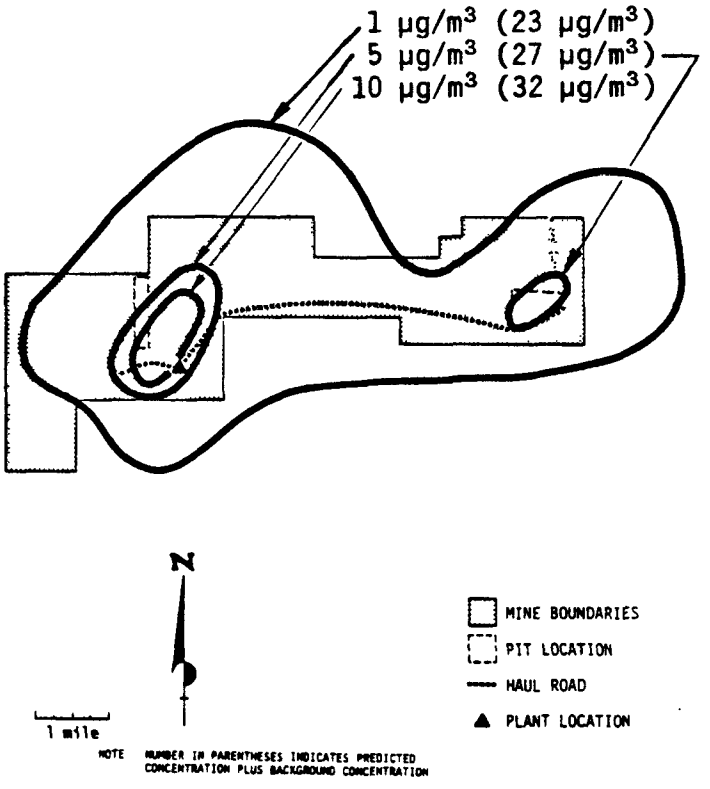

Location: Moffat County, Colorado
Coal production: 2.7×10^6 tons/year
Area disturbed: 114 acres/year
Method of overburden removal: dragline
Quantity of overburden moved: 18.1×10^6 yard^3/year
Method of dust control for haul roads: water/chemical
Annual TSP emissions: 1224 tons

Figure 32. Annual average modeled TSP concentrations Green River/Hams Fork Basin, Mine 13.

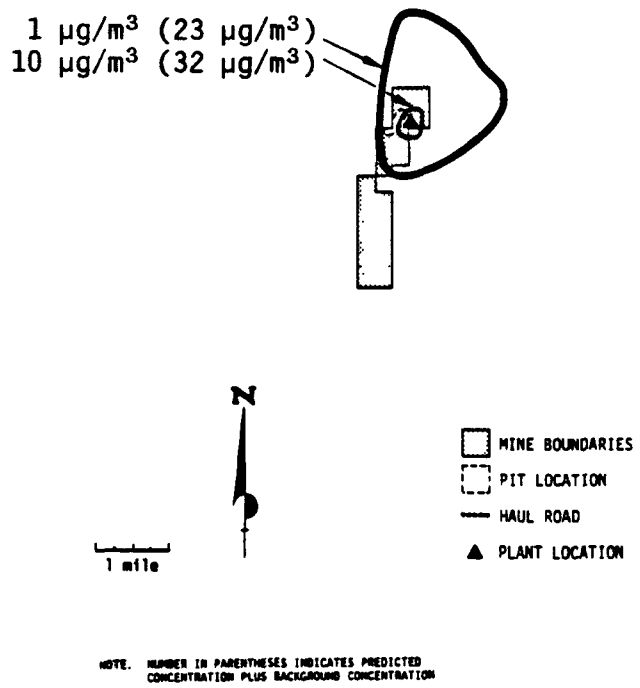

Location: Routt County, Colorado
Coal production: 0.2×10^6 tons/year
Area disturbed: 17 acres/year
Method of overburden removal: scrapers/truck-shovel
Quantity of overburden moved: 2.0×10^6 yard^3/year
Method of dust control for haul roads: water/chemical
Annual TSP emissions: 154 tons

Figure 33. Annual average modeled TSP concentrations Green River/Hams Fork Basin, Mine 14.

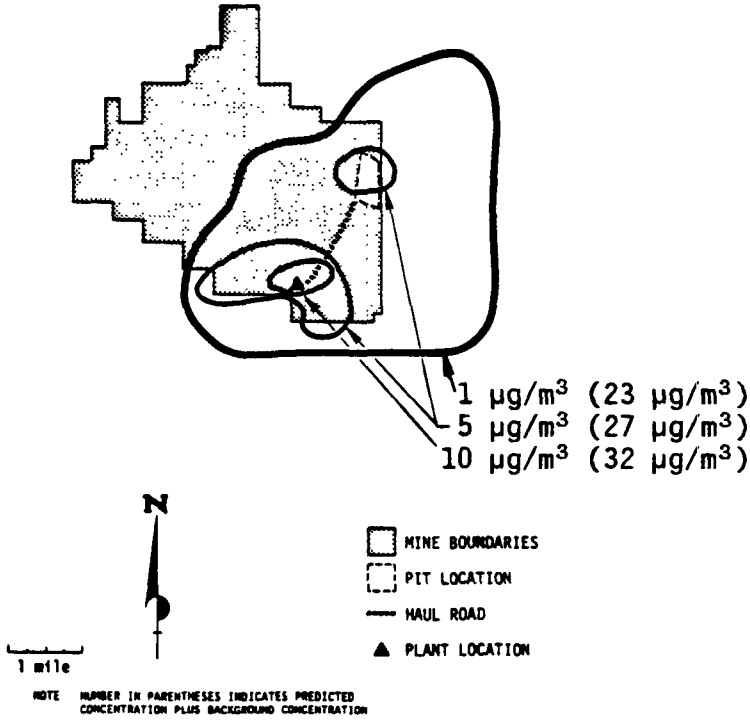

Location: Routt County, Colorado
Coal production: 2.8×10^6 tons/year
Area disturbed: 55 acres/year
Method of overburden removal: dragline
Quantity of overburden moved: 8.5×10^6 yard^3/year
Method of dust control for haul roads: water/chemical
Annual TSP emissions: 775 tons

Figure 34. Annual average modeled TSP concentrations Green River/Hams Fork Basin, Mine 15.

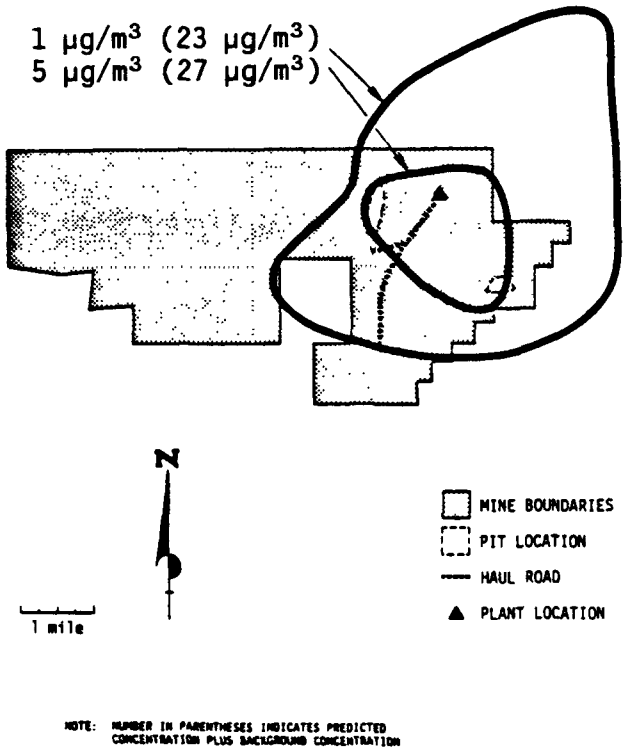

Location: Routt County, Colorado
Coal production: 1.3×10^6 tons/year
Area disturbed: 80 acres/year
Method of overburden removal: dragline
Quantity of overburden moved: 24.4×10^6 yard^3/year
Method of dust control for haul roads: water/chemical
Annual TSP emissions: 1134 tons

Figure 35. Annual average modeled TSP concentrations Green River/Hams Fork Basin, Mine 16.

There are some limitations to the results presented in the figures. Various problems have been associated with the IPP and Wyoming emission factors, and with CDM. There are widely varying terrain features that are associated with the mines in each area. This is a particular problem in the Green River/Hams Fork Basin. Neither the sketches nor the CDMQC model accurately represent the effects of complex terrain. Also, no consideration has been given to the cumulative effect of mines located in close proximity. This aspect is discussed in the next subsection. Sources of error in the concentration predictive process are discussed in detail in Section 4.0.

3.2.2 Cumulative Impact from Multiple Mines in a Mining Region

The modeling analyses presented in Subsection 3.2.1 were examples of modeling studies performed for mines in isolation from other particulate sources. In actuality, mines are often located in close proximity to other mines and ambient concentrations are cumulative concentrations from more than one mine.

This is particularly true in the Powder River Basin. Environmental Research & Technology (ERT) prepared a report for the U.S. Department of Energy (ERT 1979) in which Powder River Basin coal mines were modeled for three particle sizes and different dust categories. Figure 36 shows existing and anticipated surface coal mining operations in the Campbell County portion of the Powder River Basin. Table 13 shows the anticipated production of these mines used in the ERT study. Region VIII IPP emission factors were used in the analyses (EPA 1978). These factors, which are for TSP, were converted to 2.5 μm and 15 μm from composite size distribution curves (PEDCo 1978). The ERT air quality (ERTAQ) model was used, which is a Gaussian model similar to CDM.

The results are presented in a series of annual average concentration isopleth maps. Figure 37 shows TSP concentrations from all dust sources. Figure 38 shows TSP concentrations from coal dust emissions only. Deposition was assumed for both model runs. Inclusion of all dust sources results in TSP concentration from the mines exceeding 50 $\mu g/m^3$ without background added. The coal dust isopleths (current PSD interpretation) show maximum concentrations of 2.0 $\mu g/m^3$.

Figure 39 shows concentrations of particles ≤ 3 μm. All dust sources were included but no deposition function was used in the model. At 3 μm particle size, the lack of a deposition function had little impact on the results. The 3 μm isopleths show a maximum impact of 5 $\mu g/m^3$.

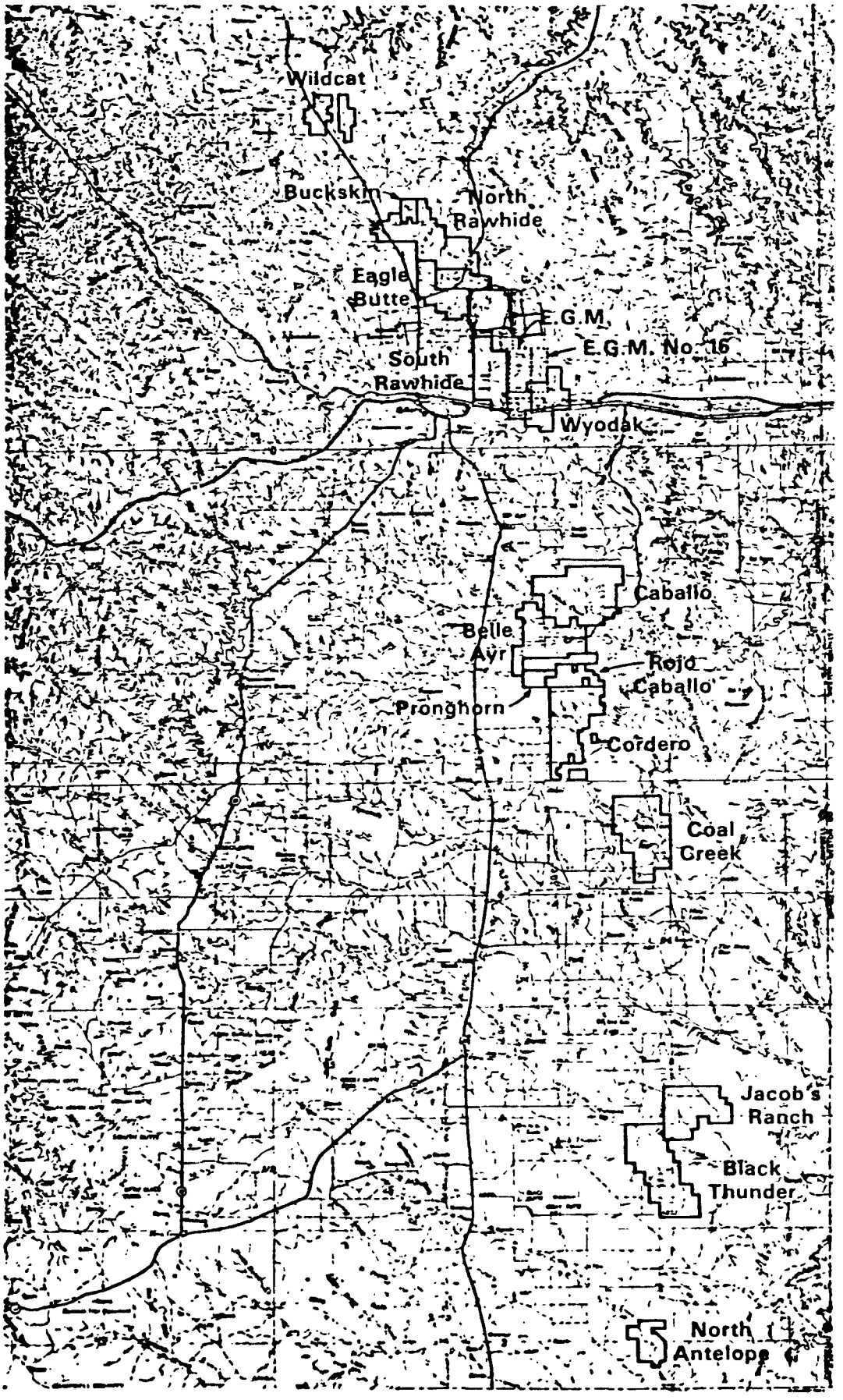

Figure 36. Existing and anticipated surface coal mining operations in Campbell County.

TABLE 13. SURFACE COAL MINES PROJECTED FOR THE CAMPBELL COUNTY PORTION OF THE POWDER RIVER BASIN

Mine	Status	Projected maximum production, million tons per year
AMAX (Belle Ayr)	Active	25
AMAX (Eagle Butte)	Under const.	20
Carter (North Rawhide)	Active	12
Carter (Caballo)	Under const.	12
Cordero	Active	24
Kerr-McGee (Jacobs Ranch)	Active	16
Kerr-McGee (East Gillette No. 16)	Under const.	4
ARCO (Black Thunder)	Active	10
ARCO (Coal Creek)	Under const.	18
Wyodak	Active	5
Consolidation Coal Co. (Pronghorn)	Application	5
ARCO (Black Thunder Expansion)	Application	20
Shell Oil (Buckskin)	Application	4
Kerr-McGee (East Gillette)	Application	11
Carter (North Rawhide Expansion)	Application	12
Carter (South Rawhide)	Application	7
Mobil Oil (Rojo Caballo)	Application	15
Other mines being planned:		
Gulf Oil (Wildcat)		10
Peabody (North Antelope, Rochelle)		5

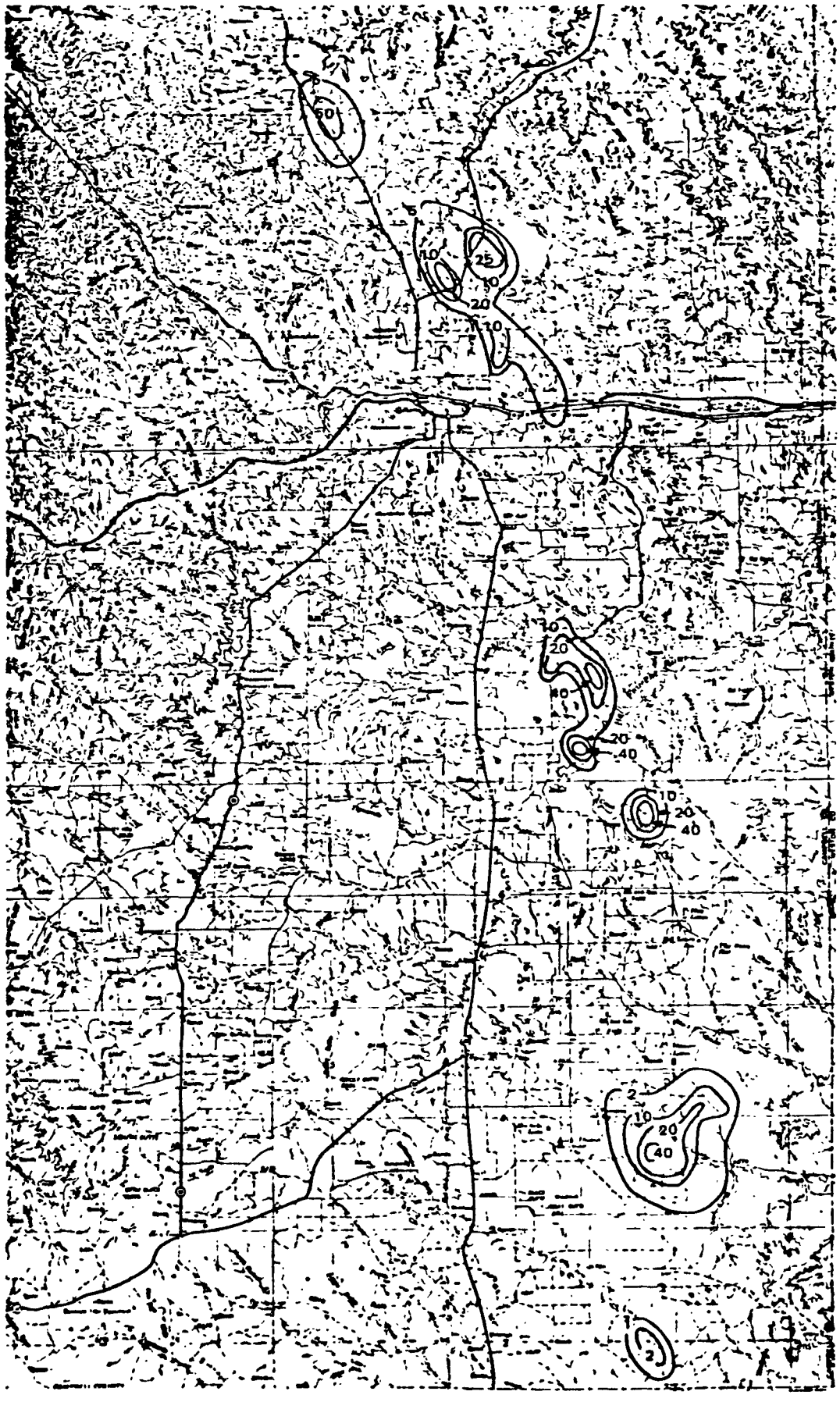

Figure 37. Annual average TSP concentrations ($\mu g/m^3$), total dust sources with deposition, no background added.

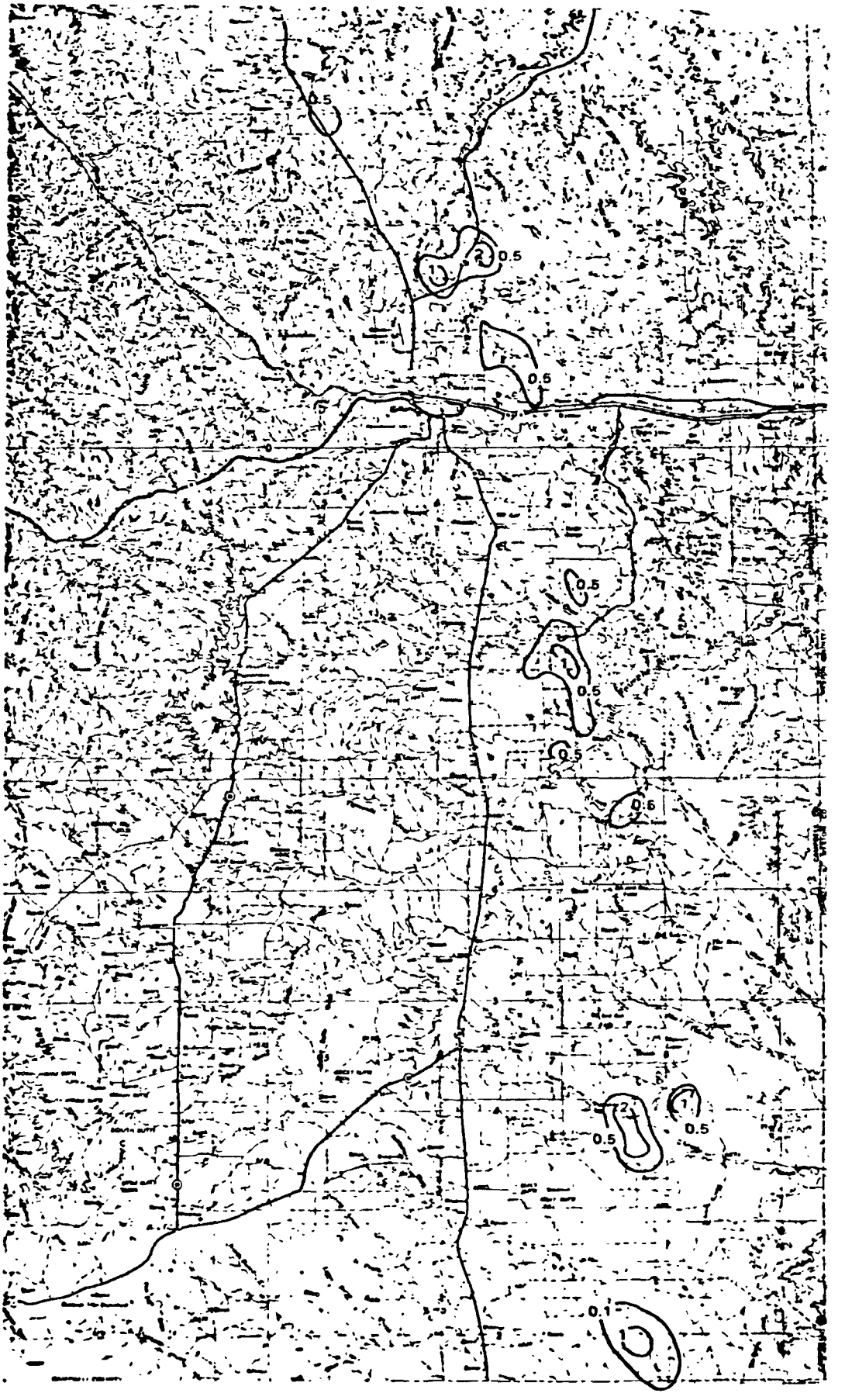

Figure 38. Annual average TSP concentrations (μg/m^3), coal dust sources with deposition.

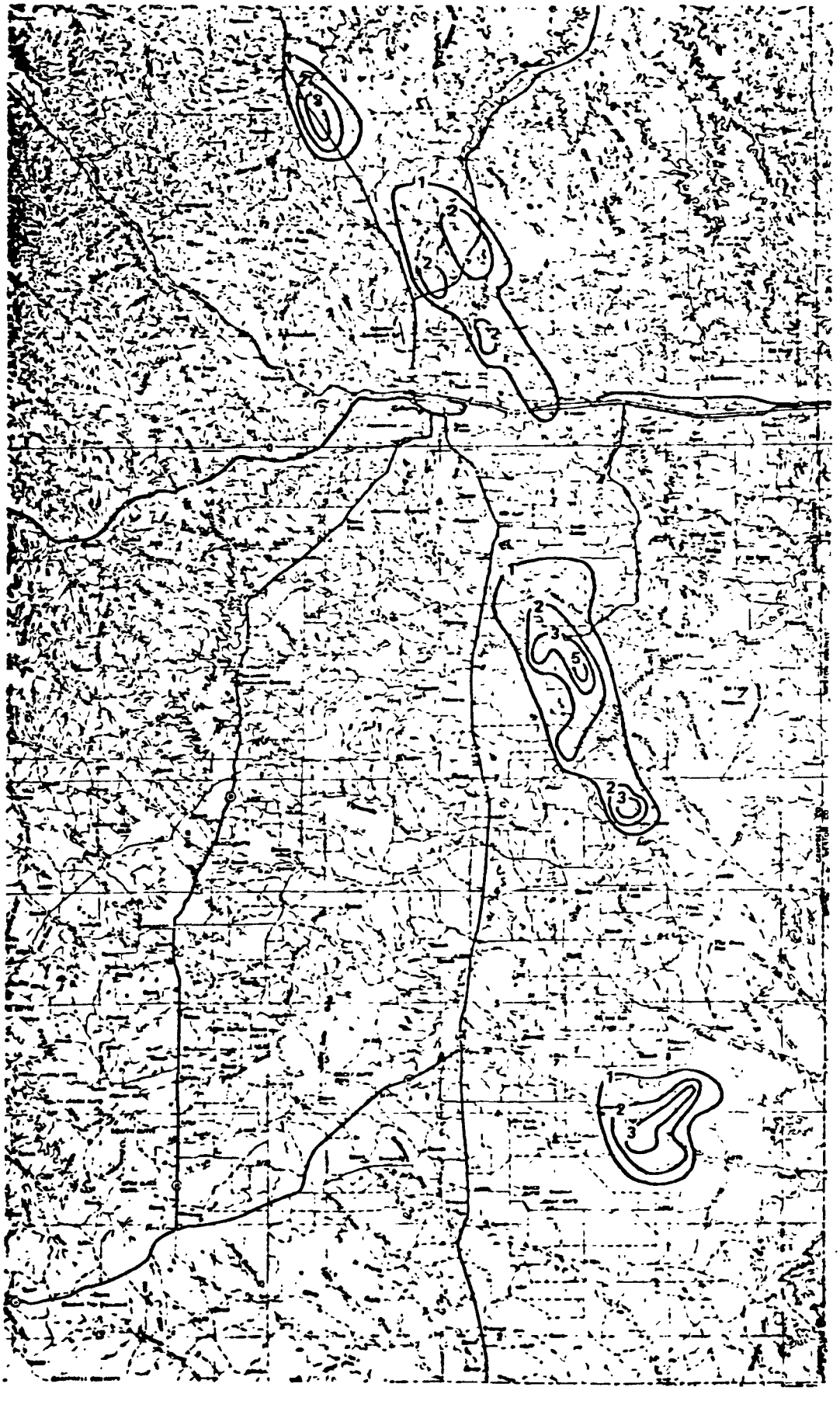

Figure 39. Annual average TSP concentrations (μg/m³), respirable particulate ≤3 μm without deposition.

3.3 OTHER DESCRIPTIVE MODELS

The model results presented in Subsection 3.2 were displayed as a series of isopleth lines. Other forms of presentation are possible which can be more graphic in displaying certain characterizations.

3.3.1 Nomograph Presentations

Emissions versus Concentrations by Air Basin--

Two studies were performed by PEDCo Environmental (1981b; 1981c) which allow prediction of worst-case fenceline annual TSP concentrations based on two data items likely to be available during the preliminary planning stages of a mine. The procedure was developed for use as a screening tool to determine if more detailed air quality studies were justified. It can be applied to surface coal mines where anticipated TSP emissions are 2500 tons/year or less.

The dispersion component was summarized in a nomograph which relates annual TSP emissions to maximum fenceline concentrations. Worst-case conditions were simulated with the CDM model through the use of air basin specific meteorological data in STAR deck form, and the worst-case annual mine configuration over the mine life shown in Figure 40. Because the worst-case mine configuration shown may never be realized over the mine life, overprediction may occur. However, this is commensurate with the procedure's intended use as a screening tool. The methodology is described in detail in the referenced reports.

The results of the two PEDCo studies are summarized in Figure 41. The figure indicates the worst case fenceline TSP concentrations in the three basins of interest in this report. The solid line indicates the concentration increase from the mine (no provision for background concentration). The nomograph indicates that dispersion conditions in the basin have a strong influence on the maximum fenceline concentration. The dashed lines on Figure 41 indicate the ambient concentration with the mine in operation (increased concentration plus background concentration). The great difference in background concentrations (ranging from 15 $\mu g/m^3$ in the Powder River Basin to 32 $\mu g/m^3$ in the San Juan Basin) further influence ambient concentrations resulting from the same level of emissions.

Concentration Versus Distance by Mine Size--

Nomographs have been prepared (Radian Corporation 1979) which relate particulate concentrations to distance from the center of the mine by mine size. Powder River Basin mines of 2, 4, 12, and 20 million tons of coal produced per year were analyzed. The mine configurations are not shown in the reference. Emission factors were derived from the EPA Region VIII Interim Policy

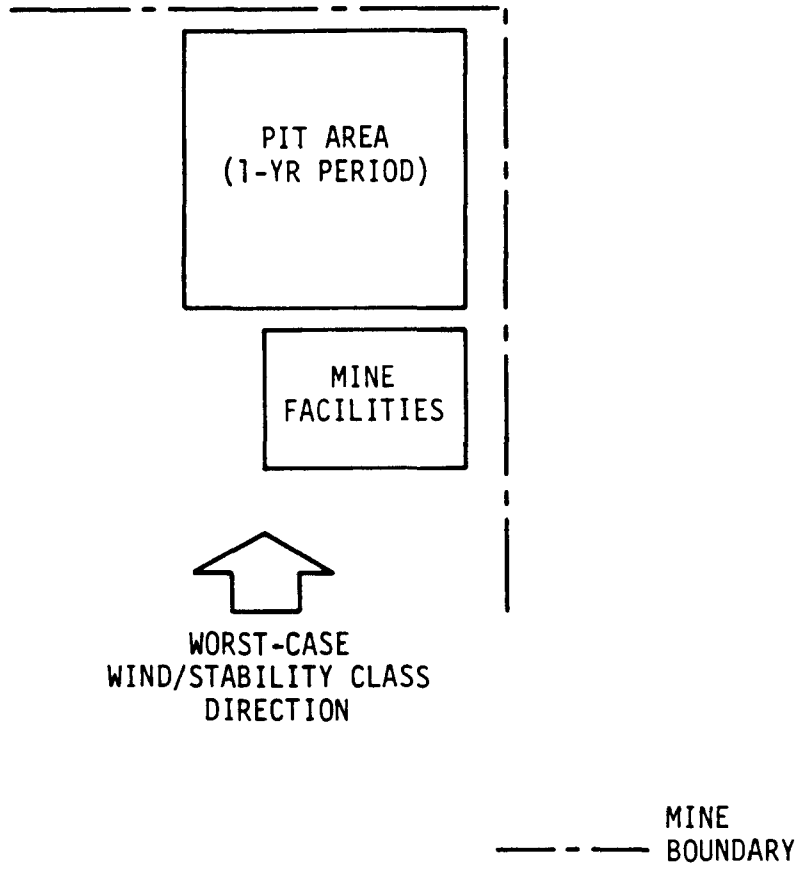

Figure 40. Assumed worst-case mine configuration.

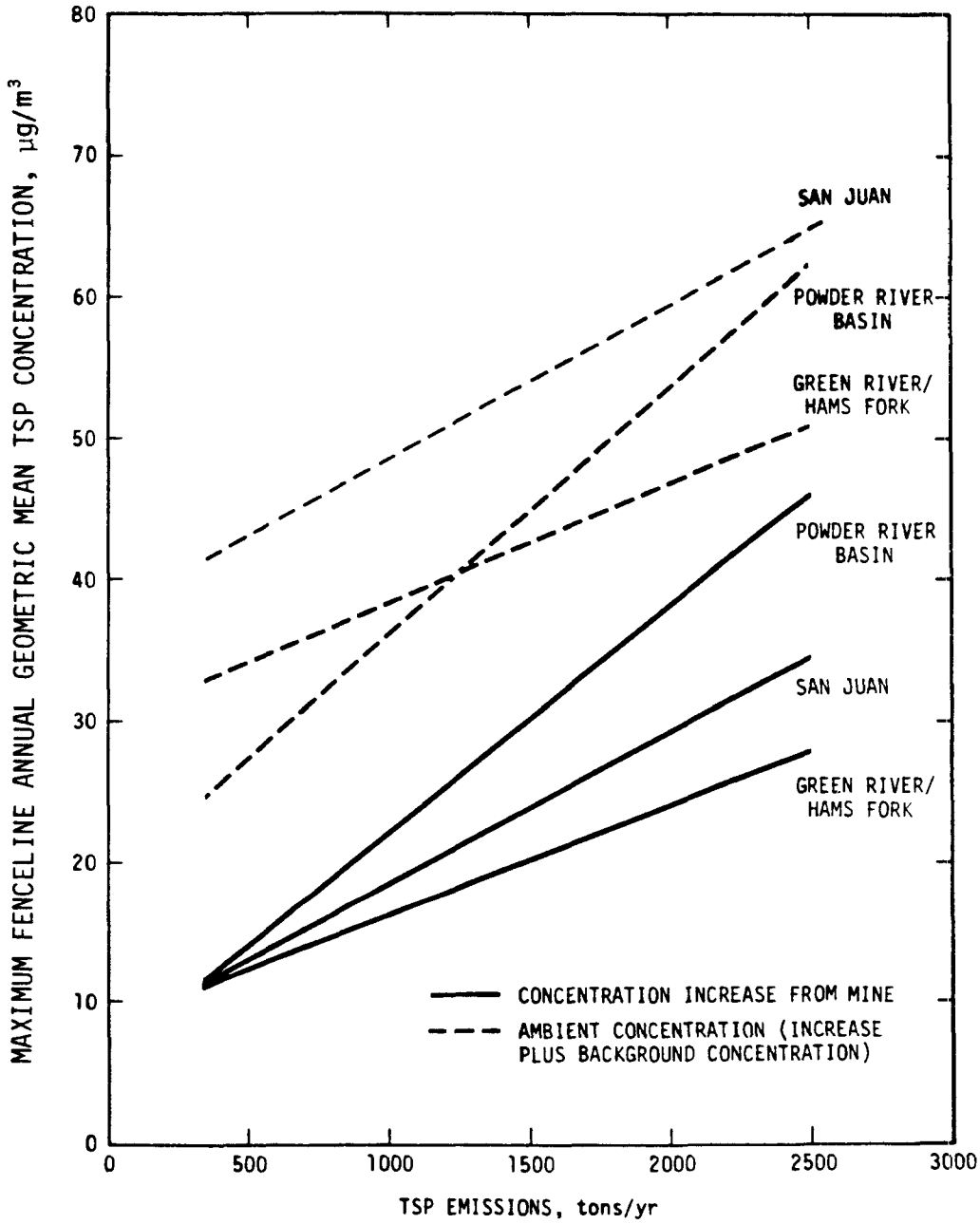

Note: Procedure not applicable when emissions exceed 2500 tons/year.

Figure 41. Nomograph procedure for predicting worst-case fenceline concentration, TSP.

Paper (EPA 1978). An 85 percent control efficiency was assumed for haul roads. Annual emissions for the four mine sizes were 914, 1823, 4888, and 6991 tons, respectively. Annual modeling was performed with the CDM model modified with a source depletion fallout function, and the RAM model with a fallout function was used for 24-hour modeling.

The results of the study are summarized in Figure 42. The figure indicates the distance from the mine center over which the TSP Class II increment would be exceeded by mine production size. Mine production size projected for the Powder River Basin ranges from 4 to 25 million tons per year, averaging 12.3 million tons per year. Data are included for the annual Class II increment (19 $\mu g/m^3$) and the 24-hour Class II increment (37 $\mu g/m^3$). Data are also shown for two cases, i.e., with the inclusion of all fugitive dust sources (same as remainder of this report), and with the inclusion of only coal dust emissions (current interpretation of existing PSD regulations). The annual increment would be violated at a distance from the mine center of 0.5 km to 1.8 km, depending on mine size and inclusion of only coal dust emissions or all fugitive dust sources. Violation of the 24-hour increment would occur at much greater distances. In the case of inclusion of coal dust emissions over both averaging periods, the distance of violation would range from less than 1.0 km to about 3.0 km. With all fugitive emissions, violation distances from the mine center would range from about 4.5 km to 16.0 km. The data indicate that inclusion of all fugitive dust emissions at larger mines would routinely violate the 24-hour Class II increment at considerable distances beyond the mine boundary. The extent of violations of the annual increment and the short-term increment with only coal dust emissions included would be dependent on the location of the mine boundary. However, the data were derived for an isolated mine. In the Wyoming portion of the Powder River Basin, mines are almost never isolated and the Class II increment would be a much greater restraint.

3.3.2 Profile Presentations

Concentration data can also be displayed in profile form. An example of a mine shown in Subsection 3.2 is shown in profile format in Figure 43. This presentation format is good for visualizing the effect of distance from the source on concentrations, as well as fenceline concentrations. Unfortunately, it is subject to several distortions if used improperly. The results are highly dependent on the cross-section used and the relationship between the vertical and horizontal scales.

In examination of Figure 43, it is apparent that the highest concentrations center around the pit area. Fenceline concentrations range from 0 to 20 $\mu g/m^3$. The profile and fenceline concentrations are specific for the year analyzed. They would both change significantly during other periods of analysis.

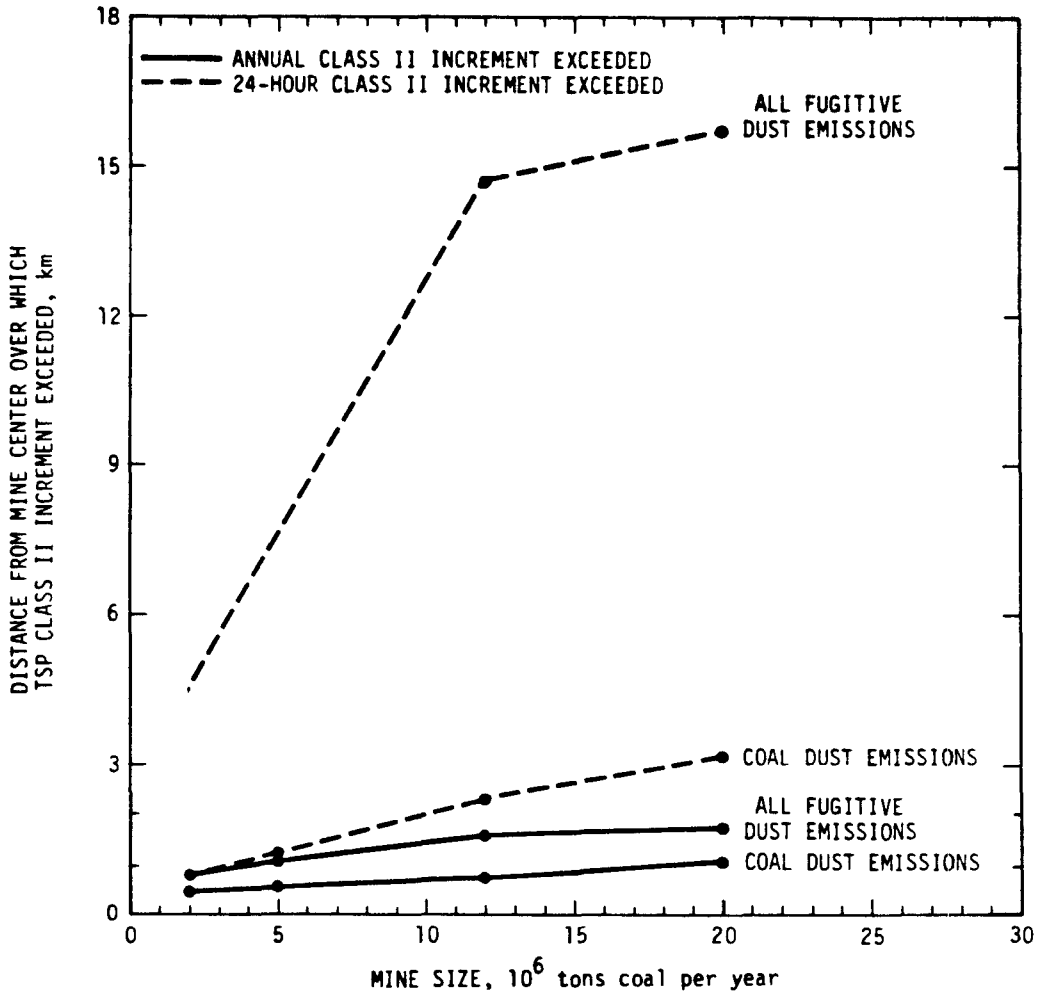

Figure 42. Distance from mine center over which TSP Class II increment is exceeded in the Powder River Basin.

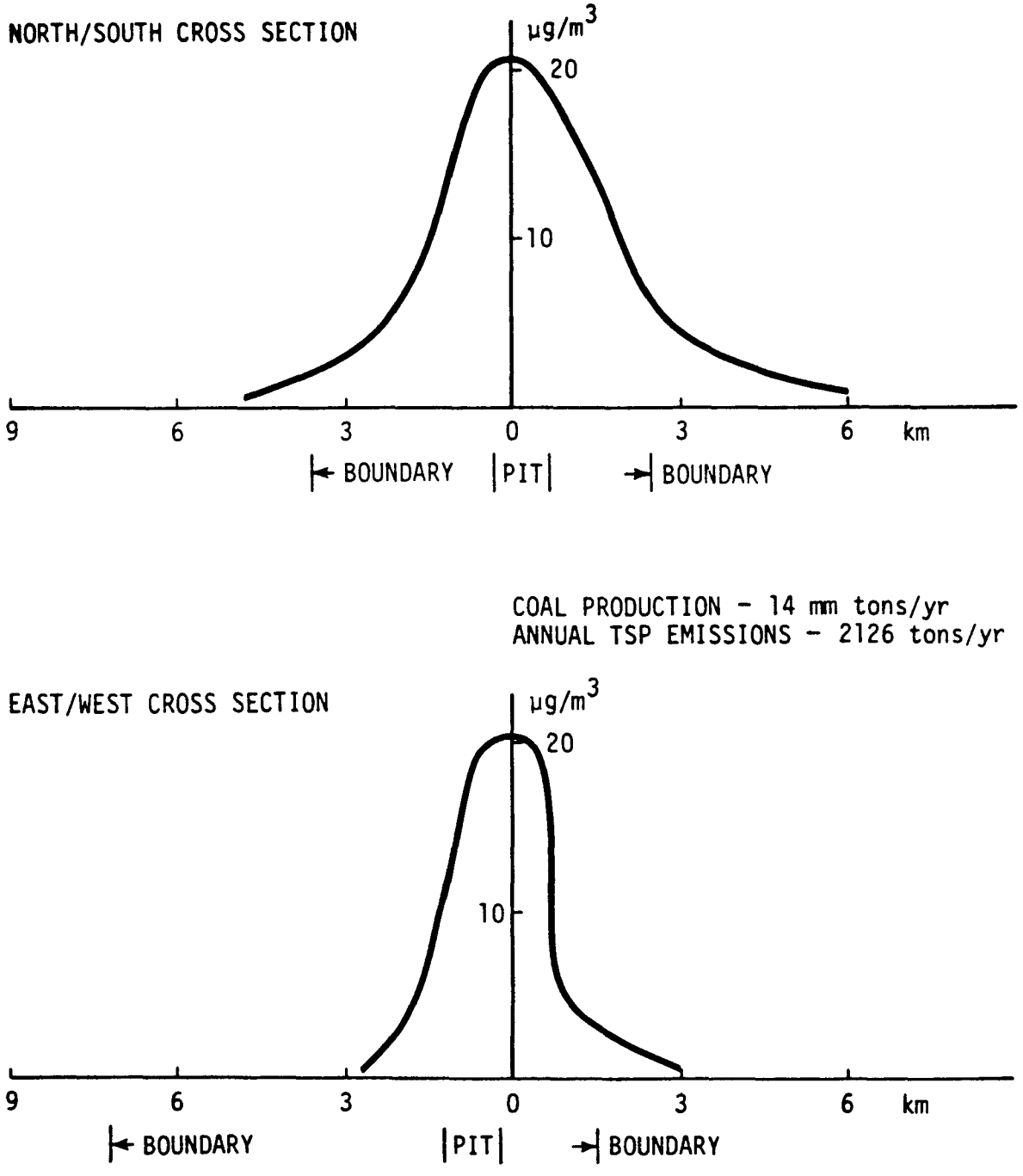

Figure 43. Profile presentation of a Powder River Basin mine, annual TSP concentrations.

3.4 RELATIONSHIP OF MODELING RESULTS TO POSSIBLE AMBIENT STANDARDS AND THE PSD PERMITTING PROCESS

The objectives of this study are to provide data on PM 10 and TSP concentrations around western surface coal mines sufficient to assess their relationship to possible ambient standards, and to assess the impact of the inclusion of fugitive dust and PM 10 in the PSD permitting process.

Most existing modeling studies allow a characterization of only annual average TSP concentrations. When mines are in isolation from other particulate sources, the results suggest that fenceline concentrations approach but would probably not violate national or state ambient annual particulate standards. On an annual basis, concentrations decrease to 1 $\mu g/m^3$ or less generally within 4 miles or less of the mine boundary. However, even with application of BACT as defined by Region VIII, the PSD Class II annual increment of 19 $\mu g/m^3$ would be violated in many cases at the fenceline if all fugitive dust was included in the analysis.

A study performed for hypothetical mines (Radian 1979) suggests that the 24-hour Class II increment (with inclusion of all dust sources) is much more restrictive than the annual increment. Areas of exceedance of the short-term increment would be as far as 10 miles from the mine center for a mine with an annual production of 20,000,000 tons.

When mines are not isolated from other particulate sources, existing model results suggest that both the existing TSP ambient standards and the Class II increments (with inclusion of all dust sources) are restraining factors at the fenceline even with application of BACT.

A nomograph procedure (PEDCo 1981a) illustrates that ambient concentrations resulting from a given level of emissions vary considerably by air basin because of different dispersion conditions and TSP background concentrations in western mining areas ranging from 15 $\mu g/m^3$ to 30 $\mu g/m^3$.

SECTION 4.0

CHARACTERIZATION OF PM 10 AND TSP AIR QUALITY AROUND WESTERN SURFACE COAL MINES USING NEW PREDICTIVE TOOLS

4.1 BACKGROUND

Two new tools are available to improve the state-of-the-art for predicting particulate concentrations around surface coal mines. The first tool is the new set of emission factors developed for EPA (PEDCo 1981a) and the second is the new Industrial Source Complex (ISC) model (EPA 1979). No modeling has been performed to date using the new EPA emission factors. However, recent application of the ISC model to surface coal mines has been made (TRC 1981).

This section describes the application of these new tools to three hypothetical mines representative of operations in three distinct coal basins. The three basins are the same as described in Section 3.0 and are the Powder River, Green River/Hams Fork, and San Juan Basins. Annual coal production for these mines was assumed to be 25.0, 3.6, and 6.5 million tons. For each mine, a detailed emission inventory was developed. These data were then used as input to the ISC model to predict ambient concentration levels around the mines.

4.2 CALCULATION OF EMISSIONS

4.2.1 Annual Emissions

The end result desired from the emission calculations was an inventory of particulate emissions by mining operation and particle size.

The calculation of these data involved four sequential steps. First, a general checklist of mining operations expected to generate particulate was developed as shown in Table 14. Next, for each operation in the list, an activity parameter was determined for each of the three hypothetical mines. Not all of the operations were expected to be found at each mine. Although the three mine scenarios were hypothetical, existing mine plans for currently operating mines were used as examples so that the resultant activity parameters would be physically realistic.

TABLE 14. MINING OPERATIONS THAT GENERATE PARTICULATE EMISSIONS

Mining and Reclamation
Topsoil removal
Scraper travel - topsoil
Topsoil dump
Overburden drilling
Overburden blasting
Overburden removal
Haul truck travel - overburden
Overburden replacement
Overburden shaping - dozers
Coal drilling
Coal blasting
Coal loading
Haul truck travel - coal
Coal dump
Dozers - coal
Wind erosion from exposed areas
Light- and medium-duty vehicle travel
Road construction and maintenance - graders
Access road travel
Process and Transfer
Crushing, screening, conveying
Coal storage
Coal loadout

Consequently, the resulting data are representative of real world data but should not be construed to be accurate for any particular coal mine. The activity parameters were developed in units appropriate for application of the selected emission factors. The data for each of the three hypothetical mines are shown in Table 15. As seen in the table, the activity parameters for the three mines are vastly different, reflecting the different mining and operating conditions in the three basins.

The third step in the sequence was to develop emission factors and control efficiencies to apply to the activity parameters. The EPA 1981 emission factors were the primary reference for factors. These emission factors were supplemented with data from the recent TRC study, (TRC 1981) IPP factors (EPA 1978) and AP-42 (EPA 1980). Base emission factors are shown in Table 16. The independent variable values associated with these factors are shown in Table 17.

EPA Region VIII defined BACT practices and control efficiencies were also used. Controls assumed were for access roads (paved, 99 percent control), haul roads (watered, 50 percent control), coal storage (Wyoming only, enclosure, direct emission factor), and various coal processing activities (enclosed, baghouse, 90-99 percent control).

The activity parameters were multiplied by the calculated emission factors (Table 18) and control efficiencies to yield controlled emissions (Table 19). For sources for which EPA 1981 factors were available, emissions for TSP and 2.5 and 15 μm are shown. These sources constituted about half of the total number of sources and about three quarters of the total TSP emissions. For sources for which TRC, IPP, or AP-42 emission factors were used, only TSP emissions are presented in Table 19.

The fourth step was to compute the particle size distribution for each mine. It was decided that one particle size distribution should be used for the entire mine in each basin rather than to attempt to define a different distribution for each operation. This decision was made for three reasons:

1. Particle size distribution data were not available for all sources.

2. Particle size analysis of measured data in several studies suggest that the size distribution of the fugitive dust does not vary drastically from operation to operation. Consequently, one average distribution for the entire mine was used.

3. Assuming a single distribution for each mine greatly simplified the subsequent modeling analyses.

TABLE 15. HYPOTHETICAL MINE ANNUAL ACTIVITY PARAMETERS

Mining operation	Activity parameters: Powder River Basin	Green River/ Hams Fork Basin	San Juan River Basin	Units per year
Topsoil removal	2.17	1.49	8.84	10^5 yd^3
Scraper travel - topsoil	1.16	0.70	3.90	10^4 VMT
Topsoil dump	2.17	1.49	8.84	10^5 yd^3
Overburden drilling	4.42	2.35	11.79	10^3 holes
Overburden blasting	312	118	325	blasts
Overburden removal	3.75	1.63	4.60	10^7 yd^3
Haul truck travel overburden	4.35	a	a	10^5 VMT
Overburden replacement	3.75	a	a	10^7 yd^3
Overburden scraping - dozers	2.36	0.70	3.03	10^4 hours
Coal drilling	9.10	4.88	59.73	10^3 holes
Coal blasting	208	128	500	blasts
Coal loading	25.0	3.6	6.5	10^6 tons
Haul truck travel - coal	1.27	0.11	0.35	10^6 VMT
Coal dump	25.0	3.6	6.5	10^6 tons
Dozers - coal	2320	4640	15167	hours
Wind erosion	310	165	1096	acres
Light- and medium-duty vehicles	4.58	0.21	0.88	10^5 VMT
Graders	1201	327	62000	VMT
Access road	0.25	0.15	2.00	10^6 VMT
Crushing, screening conveying	25.0	3.6	6.5	10^6 tons
Coal storage	b	1.0	5.0	acres
Coal loadout	25.0	a	a	10^6 tons

[a] Not applicable.
[b] Silo storage.

TABLE 16. BASE EMISSION FACTORS

Mining operation	Emission factors			Units
	TSP	<15 μm	<2.5 μm fraction of TSP	
Topsoil removal	0.058			lb/ton
Scraper travel	$(2.7\times10^{-5})s^{1.3}W^{2.4}$	$6.2\times10^{-6}s^{1.4}W^{2.5}$	0.026	lb/VMT
Topsoil dump	0.03			lb/yd^3
Overburden drilling	1.3			lb/hole
Overburden blasting	$\frac{961\ A^{0.8}}{D^{1.8}\ M^{1.9}}$	$\frac{2550\ A^{0.6}}{D^{1.5}\ M^{2.3}}$	0.030	lb/blast
Overburden removal shovel/truck dragline	 0.037 $0.0021.d^{1.1}/M^{0.3}$	 $0.0021d^{0.7}/M^{0.3}$	 0.017	 lb/yd^3 lb/yd^3
Haul truck- overburden[a]	$0.0067\ w^{3.4}L^{0.2}$	$0.0051\ w^{3.5}$	0.017	lb/VMT
Overburden replacement	0.012			lb/ton
Dozers - overburden	$5.7\ s^{1.2}/M^{1.3}$	$1.0\ s^{1.5}/M^{1.4}$	0.105	lb/hour
Coal drilling	0.22			lb/hole
Coal blasting	$\frac{961\ A^{0.8}}{D^{1.8}\ M^{1.9}}$	$\frac{2550\ A^{0.6}}{D^{1.5}\ M^{2.3}}$	0.030	lb/blast
Coal loading	$1.16/M^{1.2}$	$0.119/M^{0.9}$	0.019	lb/ton

(continued)

TABLE 16 (continued)

Mining operation	Emission factors			Units
	TSP	<15 μm	<2.5 μm fraction of TSP	
Haul truck - coal[a]	$0.0067\ W^{3.4}\ L^{0.2}$	$0.0051\ W^{3.5}$	0.017	lb/VMT
Coal dump	0.036			lb/ton
Dozers - coal	$78.4\ s^{1.2}/M^{1.3}$	$18.6\ s^{1.5}/M^{1.4}$	0.022	lb/hour
Wind erosion	aIKCL'V'			ton/ac-yr
Light- and medium-duty vehicles	$5.79/M^{4.0}$	$3.22/M^{4.3}$	0.040	lb/VMT
Graders	$0.040\ S^{2.5}$	$0.051\ S^{2.0}$	0.031	lb/VMT
Access road	0.012			lb/VMT
Crushing, screening	0.18			lb/ton
Conveying	0.20			lb/ton
Coal storage	1.6 u			lb/ac-hour
Coal loadout	0.028			lb/ton

[a] These equations were used to determine the particle size distribution only. The actual controlled TSP emission factor used was 5.6 lb/VMT for the Powder River mine.

TABLE 17. INDEPENDENT VARIABLE VALUES USED IN EMISSION FACTOR EQUATIONS

Mining operation	Variable	Descriptor	Units	Powder River	Green River/ Hams Fork	San Juan River
Scraper travel	s	Silt content	%	16.4	16.4	7.2
	W	Weight	tons	53.8	53.8	58.0
Overburden blasting	A	Area blasted	ft^2	18150.0	25841.0	73449.0
	M	Moisture	%	7.6	7.6	8.0
	D	Depth of holes	ft	135.0	135.0	80.0
Overburden removal dragline	d	Drop distance	ft	a	28.1	35.0
	M	Moisture	%	a	7.6	8.0
Haul trucks - overburden	w	No. of wheels	-	6.0	a	a
	L	Silt loading	g/m^2	40.8	a	a
Dozers - overburden	s	Silt content	%	6.9	6.9	7.0
	M	Moisture	%	7.9	7.9	2.8
Coal blasting	A	Area blasted	ft^2	27225.0	23822.0	47742.0
	M	Moisture	%	30.4	14.7	13.0
	D	Depth of holes	ft	22.0	22.0	20.0
Coal loading	M	Moisture	%	30.4	14.7	13.0
Haul truck coal	w	No. of wheels	-	6.0	8.0	10.0
	L	Silt loading	g/m^2	40.8	40.8	13.1
Dozers coal	s	Silt content	%	8.6	8.6	8.6
	M	Moisture	%	30.4	14.7	13.0

(continued)

TABLE 17 (continued)

Mining operation	Variable	Descriptor	Units	Powder River	Green River/ Hams Fork	San Juan River
Wind erosion	a	TSP fraction	-	0.025	0.025	0.025
	I	Soil erodibility	ton/acre year	47.0	47.0	47.0
	K	Surface roughness factor	-	1.0	1.0	1.0
	C	Climatic factor	-	0.4	0.4	0.8
	L'	Unsheltered field width factor	-	0.81	0.81	0.84
	V'	Vegetative cover factor	-	1.0	1.0	1.0
Light- and medium-duty vehicle	M	Moisture	%	1.2	1.2	0.9
Graders	S	Speed	mph	7.1	7.1	7.1
Coal storage	u	Average wind-speed	m/s	a	2.41	4.0

[a] Not applicable.

TABLE 18. PARTICULATE EMISSION FACTORS FOR HYPOTHETICAL MINES

Mining operation	Powder River			Green River/ Hams Fork			San Juan River			Units
	<2.5	<15	TSP	<2.5	<15	TSP	<2.5	<15	TSP	
Topsoil removal			0.089			0.087			0.087	lb/yd^3
Scraper travel	0.34	6.0	13.2	0.34	6.0	13.2	0.16	2.1	6.0	lb/VMT
Topsoil dump			0.030			0.030			0.030	lb/yd^3
Overburden drilling			1.3			1.3			1.3	lb/hole
Overburden blasting	0.23	5.5	7.6	0.30	6.8	10.1	1.63	24.8	54.2	lb/blast
Overburden removal			0.037	0.0008	0.012	0.045	0.0010	0.014	0.056	lb/yd^3
Haul truck - overburden	0.10	2.4	5.6			a			a	lb/VMT
Overburden replacement			0.021			a			a	lb/yd^3
Dozers - overburden	0.10	0.88	3.7	0.10	0.88	3.7	1.62	4.4	15.4	lb/h
Coal drilling			0.22			0.22			0.22	lb/hole
Coal blasting	0.59	4.4	19.8	2.14	21.8	71.3	5.55	50.1	185.1	lb/blast
Coal loading	0.0004	0.006	0.019	0.0009	0.011	0.046	0.0010	0.012	0.053	lb/ton
Haul truck - coal	0.10	2.4	5.6	0.14	3.7	8.3	0.24	8.1	14.1	lb/VMT
Coal dump			0.036			0.036			0.036	lb/ton
Dozers - coal	0.27	3.9	12.2	0.70	10.9	31.6	0.81	12.9	36.9	lb/h
Wind erosion			0.38			0.38			0.94	ton/ac-yr
Light- and medium-duty vehicles	0.12	1.8	2.9	0.12	1.8	2.9	0.35	5.1	8.8	lb/VMT
Graders	0.18	2.7	5.7	0.18	2.7	5.7	0.18	2.7	5.7	lb/VMT
Access road			0.012			0.012			0.012	lb/VMT
Crushing, screening, conveying			0.005[b]			0.0038			0.0038	lb/ton
Coal storage			a			12.7			21.9	ton/ac
Coal loadout			0.028			0.028			a	lb/ton

[a] Not applicable.
[b] Total preparation facility.

TABLE 19. CALCULATED EMISSIONS

Mining operation	Annual emissions, ton/year								
	Powder River			Green River/ Hams Fork			San Juan River		
	<2.5	<15	TSP	<2.5	<15	TSP	<2.5	<15	TSP
Topsoil removal			9.7			6.5			38.5
Scraper travel	2.0	34.7	76.3	1.2	20.9	45.9	3.0	40.3	117.0
Topsoil dump			3.2			2.2			13.3
Overburden drilling			2.9			1.5			7.7
Overburden blasting	<0.1	0.9	1.2	<0.1	0.4	0.6	0.3	4.0	8.8
Overburden removal			693.8	6.2	97.5	365.0	22.0	311.8	1293.0
Haul truck - overburden	20.7	528.4	1217.4			a			a
Overburden replacement			391.5			a			a
Dozers - overburden	4.6	10.4	43.7	1.4	3.1	12.9	24.6	66.5	234.2
Coal drilling			1.0			0.5			6.6
Coal blasting	0.1	0.5	2.1	0.14	1.4	4.6	1.4	12.5	46.3
Coal loading	4.6	68.8	240.9	1.6	18.9	82.2	3.3	38.4	173.6
Haul truck - coal	67.3	1715.6	3952.2	7.9	206.5	462.6	41.9	1411.0	2463.0
Coal dump			450.0			63.9			117.0
Dozers - coal	0.3	4.6	14.2	1.6	25.4	73.4	6.2	98.1	280.2
Wind erosion			117.8			62.7			1063.0
Light- and medium-duty vehicles	26.6	412.2	664.1	1.2	19.2	30.9	15.4	221.6	386.1
Graders	0.1	1.6	3.4	<0.1	0.4	0.9	5.5	83.7	176.7
Access road			1.5			0.9			12.0
Crushing, screening, conveying			65.7[b]			6.7			12.4
Coal storage						12.7			109.4
Coal loadout			350.0			49.7			a

[a] Not applicable.
[b] Total preparation facility.

For the purposes of this analysis it was further assumed that the TSP emissions could be reasonably approximated as particles <30 μm in aerodynamic size. This was a basic assumption used to develop some of the EPA 1981 emission factors. Hence, it was also used here.

The first step in determining the distribution was to sum the <2.5, <15, and TSP emissions for those sources with a particle size breakdown. Next, the <2.5, and <15 emissions were expressed as a fraction of the TSP emissions. Based on these fractions it was possible to interpolate the fractions for <5 μm and <10 μm, and to extrapolate the distribution to <20 μm by assuming a lognormal distribution.

The mass distribution determined in this manner was then applied to the total TSP emissions from the mine based on the lognormal relationship. Table 20 presents the final distribution of emissions by particle size determined for each mine.

TABLE 20. DISTRIBUTION OF EMISSIONS BY PARTICLE SIZE

	Cumulative emissions less than stated size, tons/year					
Hypothetical mine	2.5 μm	5 μm	10 μm	15 μm	20 μm	30 μm
Powder River	166	797	2,383	3,711	4,708	8,303
Green River/Hams Fork	26	105	301	469	610	1,286
San Juan River	157	676	1,896	2,899	3,653	6,559

These distributions were used as input to the ISCST and ISCLT models for predicting the annual and 24-hour mean concentrations.

In further examination of Table 20, the emissions for the San Juan Basin mine 6.5 million appear high when compared to the Powder River Basin mine (25 million tons/year of coal produced). This is a direct result, however, of the activity parameters assumed in the scenarios (Table 4-2). Because of the lower coal to overburden ratio in the San Juan Basin, it is necessary to disturb significantly more acres of land and cubic yards of overburden per unit coal mine.

The approach described above represents one possible way to define the particle size distribution of the emissions. Certainly other methods could be used to produce a distribution composed of more coarse particles or more fine particles. The method selected was based on the methodology used to develop the EPA 1981 emission factors. The emissions defined by these factors represent about 75 percent of the total mine emissions. As these factors were developed from field sampling for the particular particle

sizes described (2.5, 15, TSP), using some other distribution based on another type of analysis did not seem to be justified.

In critical evaluation of the particle size distributions shown in Table 20, these distributions are compared to particle size distributions found by other researchers in Figure 44. Only a few such distributions are presented, others are available. All of the distributions shown in the figure represent the portion of the material less than 30 μm. This change in the original data was made so that the distributions could be compared directly. A further simplification was to assume a lognormal distribution of the data.

The two upper curves represent the results of microscopic analysis of open faced filters exposed near haul roads (EPA 1978; TRC 1981). The particle sizes represented by these two curves are observed physical diameters. There are four basic limitations to the microscopy data that prevent their application to measured TSP concentrations.

1. The filters are exposed open faced. Consequently larger particles are collected than would be collected with a hi-vol, thereby, biasing the distribution towards coarser particles.

2. The distributions are based on physical rather than equivalent aerodynamic diameters. This limitation conceivably creates a bias towards the finer particles.

3. The distributions include the small sizes of particulate present in the background concentrations, adding an additional bias towards the fine particles.

4. Microscopy cannot accurately identify fine particulate (less than about 2 μm in physical diameter) because of the lack of optical resolution and because some of the fine particulate may be located out of view behind the larger particulate. Therefore, the distribution will be biased towards the larger, easier to perceive, particle sizes.

It is not known to what extent these biases affect the overall distribution.

The lower curve is a composite of ambient data obtained with a cascade impactor within 5 m of a haul road. The data represent the best attempt to correct measured data to account for one of the serious limitations of this instrument, particle bounce through. Additionally, no consideration is usually given to the density of the collected particulate or to the portion of the distribution attributable to background. The net effect of these three problems is to bias the resulting distribution towards the

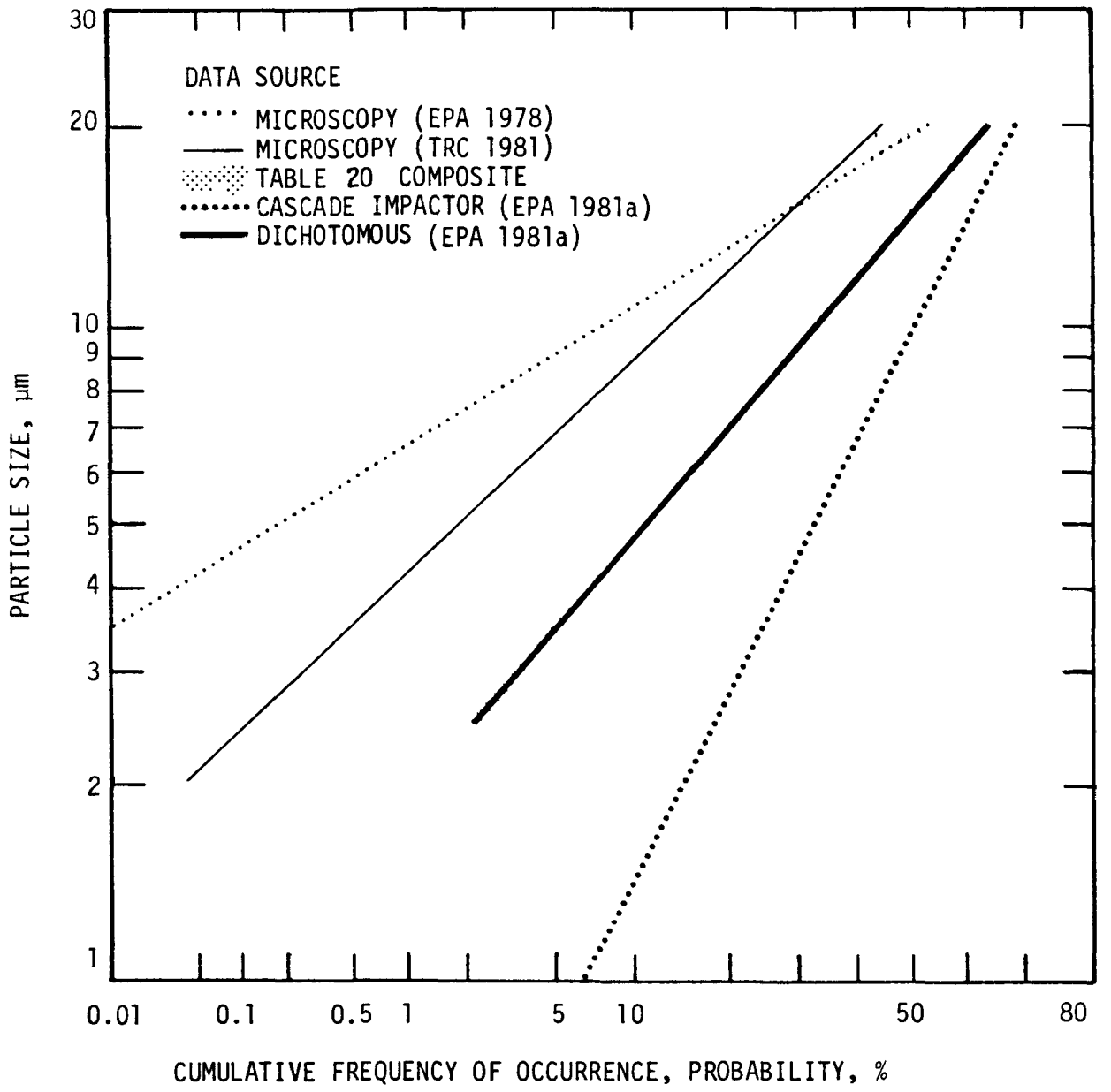

Figure 44. Examples of composite particle size distributions from coal mining particulate sources.

fine particle sizes, drastically limiting the usefulness of data collected with this instrument.

The middle curve represents ambient data collected with a dichotomous sampler near haul roads. The virtual impaction principle used in this instrument theoretically gives concentrations for particulate with aerodynamic diameters <2.5 and <15 μm. However, there are also several problems associated with this instrument. The inlet design of this device is sensitive to the ambient windspeed requiring questionable corrections to obtain the <15 μm concentration. Also, the mass of <2.5 μm particulate routinely collected during field sampling is very near the detection limit of the gravimetric analysis method. Additional problems are related to the filter media and handling procedures used in fugitive dust testing. One identifiable effect of these problems noted in a recent study (EPA 1981) was that the <2.5 μm concentrations are artifically high by about 10 percent. This has the influence of biasing the 10 μm data towards a finer particle distribution by about 1 percent.

In addition to the sampling biases outlined above there is one underlying assumption that is critical to the analysis, the assumption of the lognormal distribution. This assumption is especially appealing, as it greatly simplifies many aspects of particle size analyses. The fugitive dust generated by a single mechanism can be approximated by the lognormal distribution, especially for coarse (>2.5 μm) particulate (EPA 1981). However, additional research needs to be performed in order to justify or invalidate the use of this assumption.

The sensitivity of coal mine modeling results to size distribution has not been critically analyzed. It is an area where additional research is needed. Theoretically, assumption of a distribution composed of more coarse particles than the true distribution would result in lower initial emissions for the smaller particle sizes and a greater amount of deposition over distance. The effect of this distribution would be to underestimate downwind concentrations. Conversely, assumption of a finer distribution would be associated with greater emissions for the smaller sizes, less particle deposition, and larger downwind concentrations. These concepts are displayed in Figure 45 for PM 10 or TSP. Additional research is required in order to define these curves.

4.2.2 Twenty-Four-Hour Emissions

In addition to the annual emissions estimates, 24-hour emissions were required for the modeling. Unfortunately, there is no standardized approach for determining short-term emission levels. This has led to a wide variety of practices that further compromise the accuracy of 24-hour modeling. A simple procedure was developed

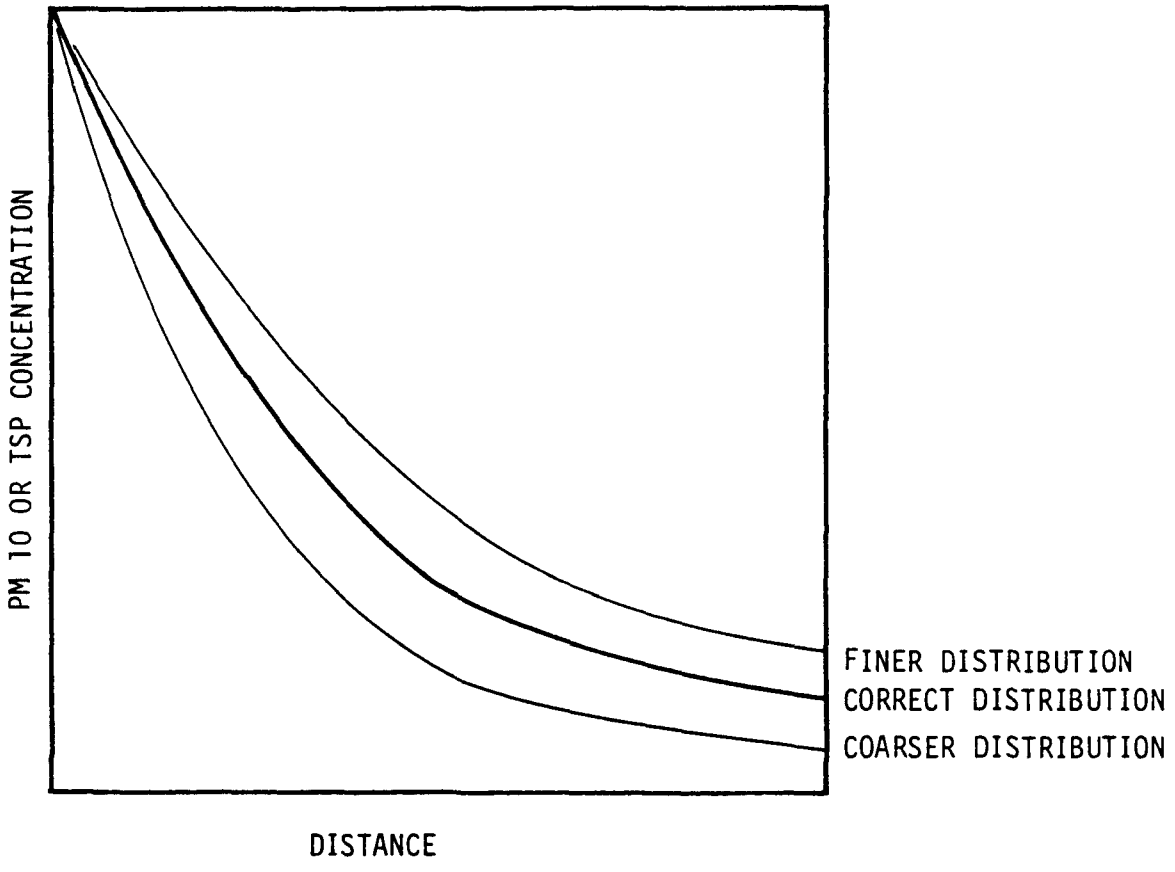

Figure 45. Theoretical impact of incorrect particle size distribution on model-predicted PM 10 or TSP concentrations.

for this study to convert annual emissions to 24-hour emissions. For all sources except blasting and wind erosion, the annual emissions were divided by 365 to obtain the daily average. Then the daily averages were increased by 25 percent to represent peak 24-hour emissions to represent worst-case activity parameters. Other methods could have been used. In general, the procedure should be standardized to facilitate a uniformity of short-term modeling assumptions.

For blasting it was assumed that the most blasts that would occur in a given day were: 2 coal and 2 overburden (Powder River); 1 coal and 1 overburden (Green River/Hams Fork); 3 coal and 3 overburden (San Juan River). The fraction of the annual emissions for the 24-hour period was then calculated based on the total number of blasts of each type for the year.

Wind erosion emissions for 24-hours were based on the mean number of days with <0.01 inch of precipitation. These were 273, 275, and 285 for the three mines. Annual wind erosion emissions were simply divided by the number specific to scenario location.

The same particle size distribution developed for the annual modeling was used with the 24-hour emissions.

4.3 CALCULATION OF CONCENTRATIONS

The ISC model was used to predict both PM 10 and TSP particulate concentrations, for annual average and 24-hour time periods at each of the previously discussed hypothetical mines. The goal of the simulation was to model each mine as if an air quality permit application were being prepared. All assumptions and idealizations used in the modeling effort are those routinely used by permit applicants, air quality consultants, and reviewing agency personnel.

4.3.1 Fundamentals of the ISC Model

The ISC dispersion model can be used to perform air quality impact analyses for a wide variety of facilities, including surface coal mines. It should be noted, however, that certain features of coal surface mines, such as pit retention and wet deposition of particles, are not treated and that dry deposition and particle reentrainment are handled somewhat simplistically. The ISC model combines various analytical dispersion modeling algorithms in two computer programs, a short-term version and long-term version. The ISC model short-term program (ISCST) is an updated version of the EPA's CRSTER model. The ISC model long-term program (ISCLT), a sector-averaged model, utilizes some of the features of two EPA UNAMAP models: the Climatological Dispersion Model (CDM) and the Air Quality Display Model (AQDM). Both programs (ISCST and ISCLT) of this comprehensive model offer

some very useful features that are especially attractive for use in simulating surface mines. The feature options exercised for this modeling task include:

- Emissions from a combination of area and volume sources with physical separation of the multiple sources.
- Application-defined receptor grid.
- Effects of gravitational settling and dry deposition.
- Dispersion coefficients and mixing depths for a rural environment.
- Simulation of site-specific atmospheric conditions.

The same basic dispersion model assumptions apply to both programs (ISCST and ISCLT). The steady-state Gaussian plume equation for a continuous source is used to calculate groundlevel particulate concentrations for point, area, and volume, sources. The area source model is based on the dispersion equation for a continuous and finite cross-wind line source. This extremely flexible model calculates particulate concentrations using sequential hourly meteorological data for the short-term (24-hour) and a joint frequency distribution of windspeed, wind direction, and Pasquill stability class for the long-term (annual) values.

The ISC model offers some very real advantages over other widely used dispersion models for simulating the air quality impact of surface coal mines. Most important, the ISC model includes a treatment of particle settling and deposition which is essential if concentrations of large particulate (including TSP) are to be accurately predicted. Secondly, the ISCLT and ISCST programs permit a great deal of latitude in how the modeler idealizes sources such as haul roads, coal handling facilities, mine pits, etc., so that a surface coal mine can be approximated more closely than with most other models. The ability to employ volume sources to simulate haul roads, for example, permits a better representation of the road than do the line source or sequential point source methods of other models. Finally, the ISC's detailed meteorological input ensures that the convective and diffusive parameters governing particulate transport will be properly described. A technical description of each of the models features is contained in Appendix C.

4.3.2 Application of the ISC Model

Source Data--

Calculation of emissions was described in Subsection 4.2. Appendix C contains source apportionment data for the three location scenarios (annual and 24-hour), and source characteristics (number of sources, source type, source size, σ_y, and σ_z).

Receptor Data--

Model grid receptors used in the annual average ISCLT simulations were placed in a uniform Cartesian coordinate system, equally spaced at intervals of 0.5 kilometers over a range of 40 kilometers in both the N-S and E-W directions. The hypothetical mine sources were situated near the center of the grid array.

Model receptors used in the 24-hour ISCST model runs were located on Cartesian coordinates nodes confined to a 90 degree wide sector in the predominant downwind direction of the mine. Receptor spacing ranged from 0.5 to 2.0 kilometers in distance, with additional random receptors situated near major mine sources to better define peak concentrations. The range of the receptor array extended to roughly 30 kilometers in the downwind direction.

Meteorological Data--

The meteorological data input to the ISCLT models included joint frequency of occurrence of windspeed, wind direction, and stability class (STAR deck) collected at surface stations in the vicinity of the hypothetical mines:

- Craig, Colorado STAR data used to model Green River/Hams Fork Basin mine.
- Farmington, New Mexico STAR data used to model San Juan Basin mine.
- Moorcroft, Wyoming STAR used to model Powder River Basin mine.

Annual average ambient temperatures were set to 281 degrees Kelvin for all three mines, and annual mixing heights were input as 5,000 meters for stability classes A-D, and 10,000 meters for stability classes E and F. Values of vertical potential temperature gradient and wind profile power law exponents were set to the ISCLT default values.

For the 24-hour ISCST model runs, the combination of windspeed, wind direction, and stability class was chosen so as to yield maximum groundlevel concentrations that could be reasonably expected to occur twice in a one-year period. Concentrations predicted in this manner represent second-highest values, directly comparable to existing ambient air standards. The windspeeds and stability classes were set equal to those identified by D. B. Cabe as prompting peak 24-hour particulate concentrations downwind of surface coal mines, based on previous studies using the RAM model (Radian 1979). Wind directions were centered about a mean coinciding with the major axis of each of the hypothetical mines' sources so that as many sources as possible were in line with the wind direction. Individual hourly wind directions were then randomized within a 22.5 degree sector about this mean wind

direction. The windspeeds, wind directions, and stability classes modeled at each of the three hypothetical mines are shown in Appendix C. Like the long-term model runs, air temperatures were set to 281 degrees Kelvin and mixing heights were assumed equal to 5,000 meters.

Background Concentrations--

The background concentrations used in the analyses are the same as were used elsewhere in this report and are shown in Table 21.

TABLE 21. ASSUMED BACKGROUND CONCENTRATIONS USED IN THE SCENARIO ANALYSIS

Basin	Background concentration, $\mu g/m^3$	
	TSP	PM 10
Powder River Basin	15	9
San Juan Basin	32	9
Green River/Hams Fork Basin	22	9

Two items are of note. First, the same background concentrations were used for the annual and 24-hour averaging periods. This undoubtedly is an underestimate of the 24-hour level but no data are available to determine a short-term background concentration. Secondly, for the reasons noted in Subsection 2.3.2, the same background concentration for PM 10 had to be used in all basins.

Pit Retention--

For all of the modeling runs, no terrain adjustments were made to receptors or sources. Emissions from the mine pits were assumed to occur at groundlevel, and therefore, no correction was made for retention of particulate matter within the pit. These procedures are common modeling practice.

Lack of adjustment for pit retention is contrary to accepted intuitive knowledge about surface coal mine particulate emission and dispersion characteristics. However, the technical ability to accurately simulate the effect of pit retention is not available. For example, while pit retention is known to occur, preliminary estimates of pit retention range from about 25 to 90 percent under almost identical conditions. Additional research is required in order to gain the technical ability to account for pit retention.

Conversion of Arithmetic Concentrations to Geometric Concentrations--

The long-term computer models calculate arithmetic concentrations which, for comparison with annual geometric mean standards, must be corrected. The commonly accepted means of converting long-term modeled concentrations to geometric means is to multiply the modeled arithmetic concentrations by a factor equal to the ratio of measured annual average geometric concentration over measured annual average arithmetic concentration. Of course, the value of this factor differs according to geographic location. A collection of characteristic factor values gathered from measured hi-vol networks in the West are shown in Table 22 below:

TABLE 22. ANNUAL AVERAGE GEOMETRIC/ARITHMETIC TSP CONCENTRATIONS MEASURED BY THE HI-VOL METHOD

Location	Geom/arith factor
Powder River Basin (Gillette, Wyo.)	0.75
Powder River Basin (Colstrip, Mont.)	0.80
Little America, Wyoming	0.86
Sheridan, Wyoming	0.79

The factor values in Table 22 do not differ greatly. In order to predict geometric mean concentrations that are conservatively high, it was decided to use the factor corresponding to the Little America, Wyoming area (0.86). All annual average arithmetic concentrations, both TSP and PM 10, were multiplied by 0.86 to obtain annual geometric means displayed in Figures 46 through 57.

4.3.3 Results

The results of the long- and short-term modeling are displayed in Figures 46 through 57, numbered as follows:

Figure 46: Powder River Basin, Annual TSP

Figure 47: Powder River Basin, Annual PM 10

Figure 48: Powder River Basin, 24-Hour TSP

Figure 49: Powder River Basin, 24-Hour PM 10

Figure 50: San Juan Basin, Annual TSP

Figure 51: San Juan Basin, Annual PM 10

Figure 52: San Juan Basin, 24-Hour TSP

Figure 53: San Juan Basin, 24-Hour PM 10

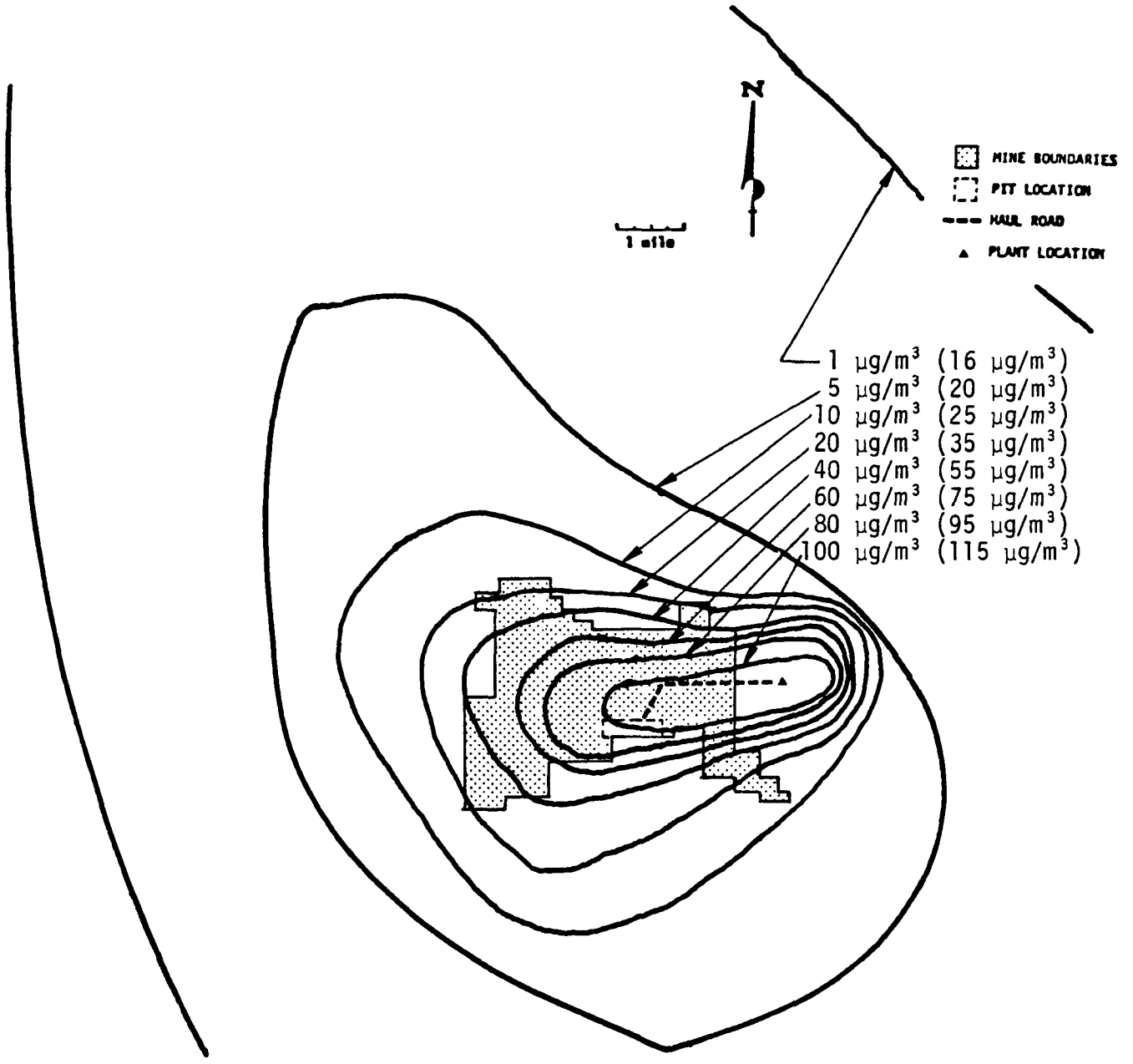

NOTE: NUMBER IN PARENTHESES INDICATES PREDICTED CONCENTRATION PLUS BACKGROUND CONCENTRATION

Location: Powder River Basin
Coal production: 25 x 10^6 tons/year
Area disturbed: 130 acres/year
Method of overburden removal: shovel/truck
Quantity of overburden removed: 37.5 x 10^6 yard^3/year
Method of dust control: water
TSP emissions: 8303 tons/year

Figure 46. ISC modeled annual geometric mean TSP concentrations, Powder River Basin.

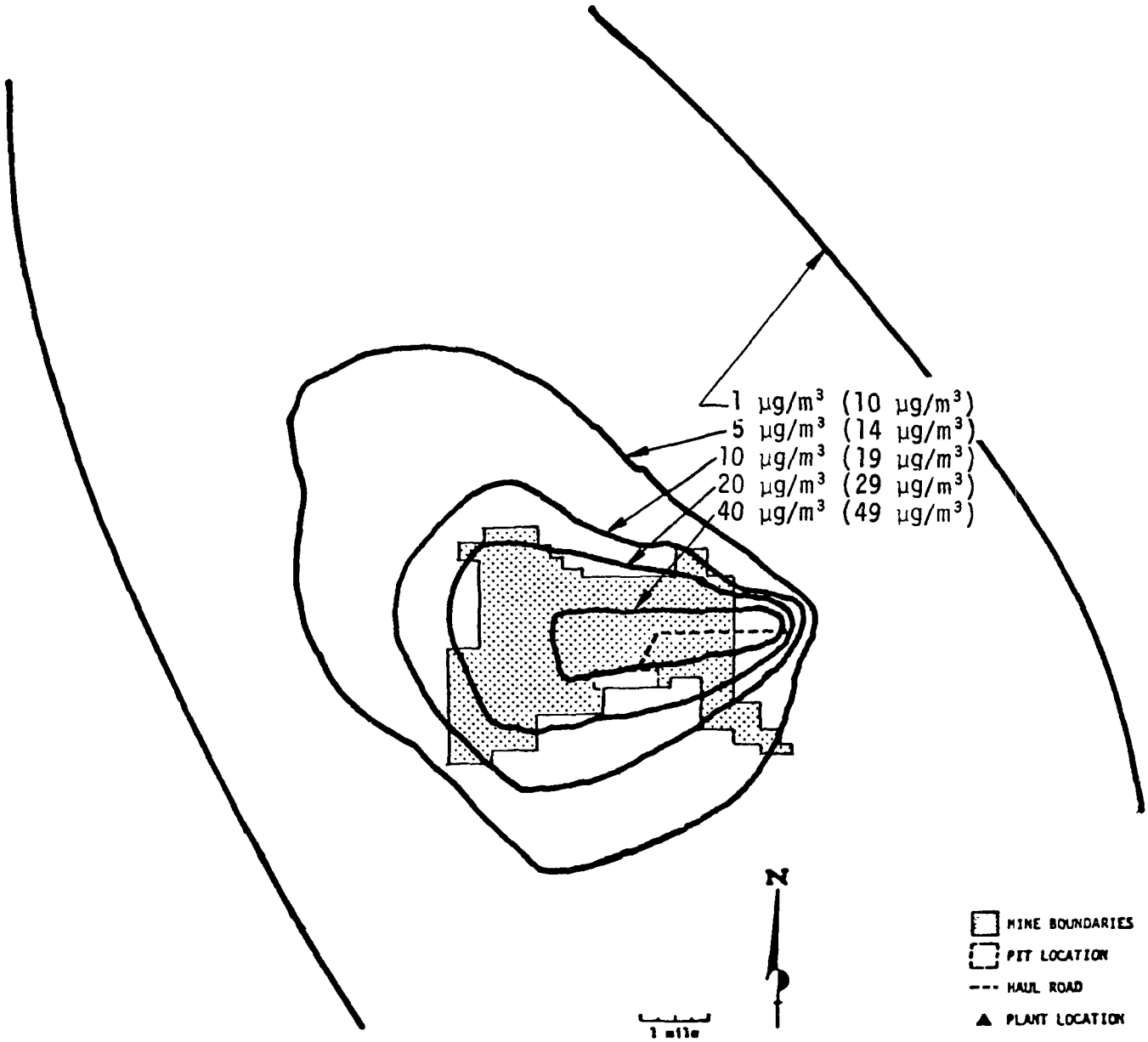

NOTE: NUMBER IN PARENTHESES INDICATES PREDICTED CONCENTRATION PLUS BACKGROUND CONCENTRATION

Location: Powder River Basin
Coal production: 25 x 10^6 tons/year
Area disturbed: 130 acres/year
Method of overburden removal: shovel/truck
Quantity of overburden removed: 37.5 x 10^6 yard^3/year
Method of dust control: water
TSP emissions: 8303 tons/year

Figure 47. ISC modeled annual geometric mean PM 10 concentrations, Powder River Basin.

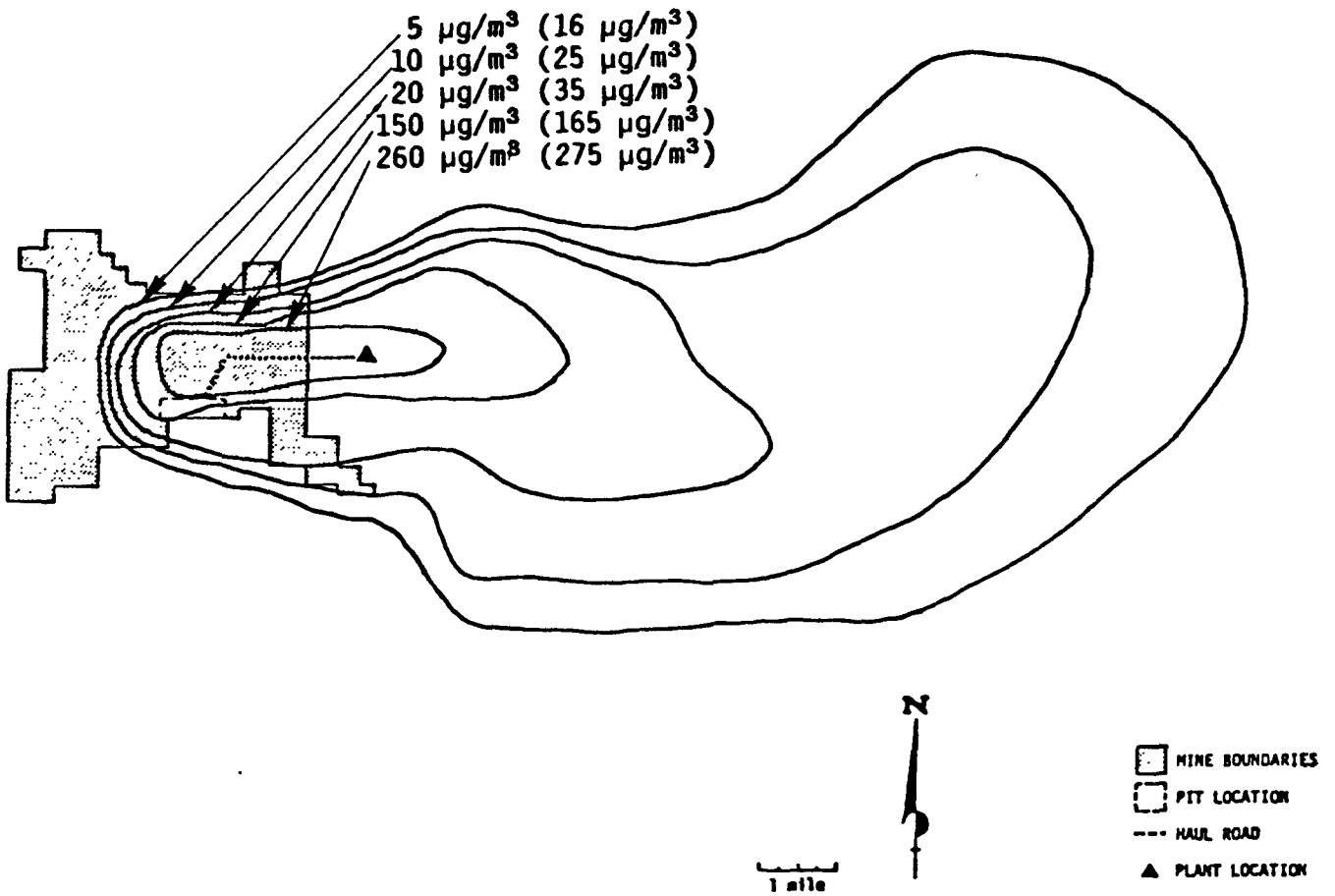

NOTE: NUMBER IN PARENTHESES INDICATES PREDICTED CONCENTRATION PLUS BACKGROUND CONCENTRATION

Location: Powder River Basin
Coal production: 86×10^4 tons/day
Area disturbed: 310 acres
Method of overburden removal: shovel/truck
Quantity of overburden removed: 1.29×10^5 yard^3/day
Method of dust control: water
TSP emissions: 2390 lbs/h

Figure 48. ISC modeled 24-hour TSP concentrations, Powder River Basin.

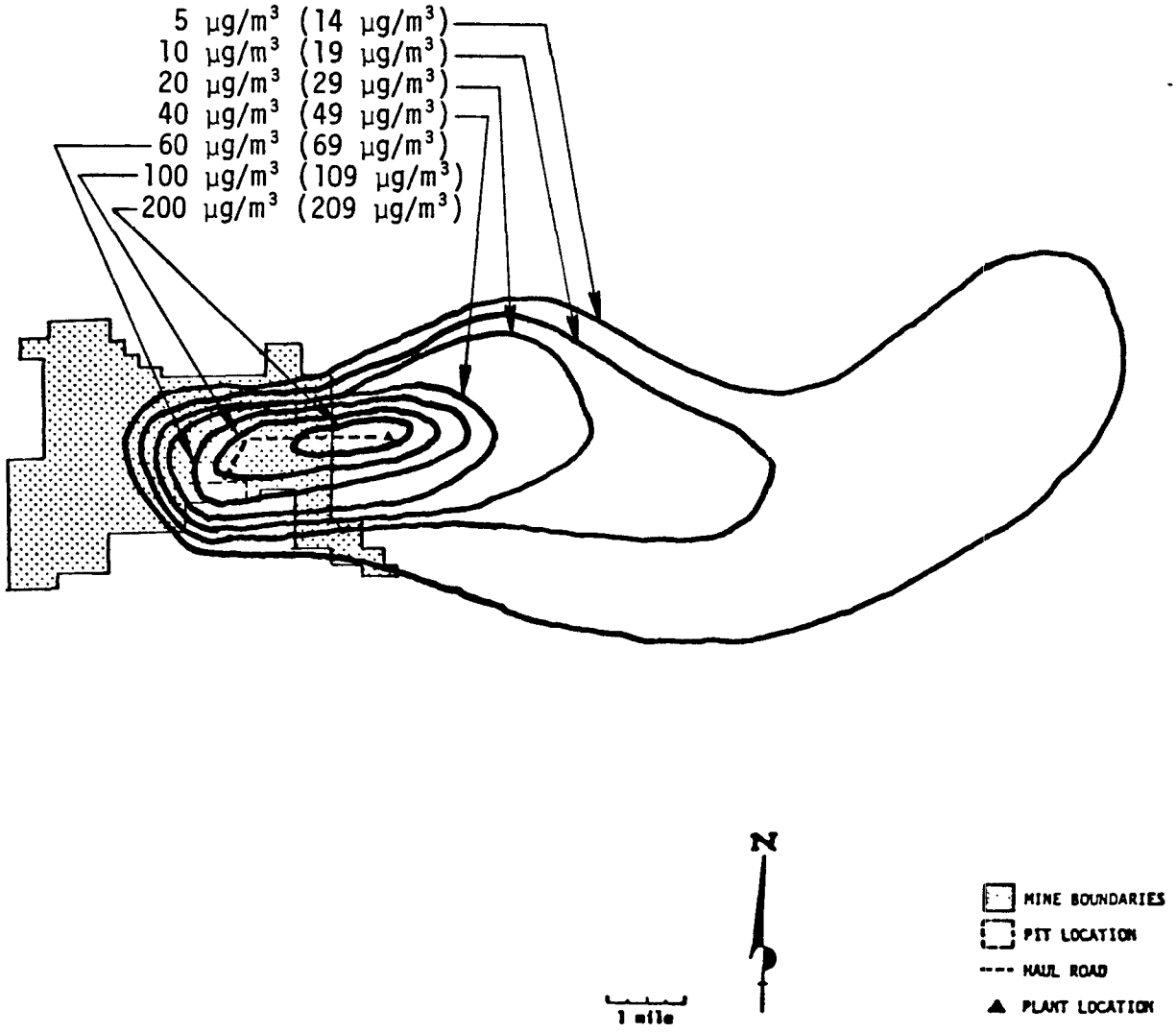

NOTE: NUMBER IN PARENTHESES INDICATES PREDICTED CONCENTRATION PLUS BACKGROUND CONCENTRATION

Location: Powder River Basin
Coal production: 8.6×10^4 tons/day
Area disturbed: 310 acres
Method of overburden removal: shovel/truck
Quantity of overburden removed: 1.29×10^5 yard^3/day
Method of dust control: water
TSP emissions: 2390 lbs/h

Figure 49. ISC modeled 24-hour PM 10 concentrations, Powder River Basin.

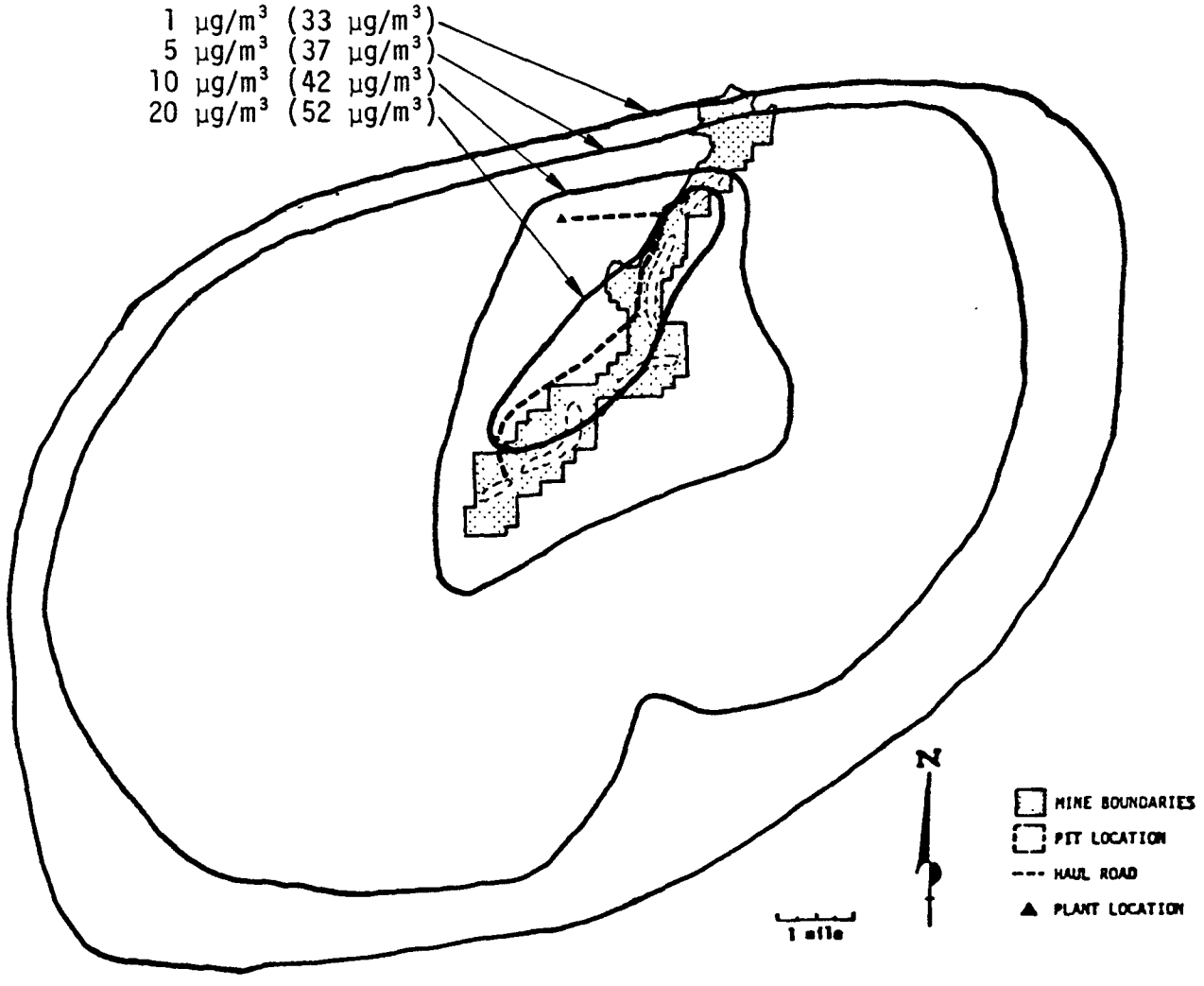

NOTE: NUMBER IN PARENTHESES INDICATES PREDICTED CONCENTRATION PLUS BACKGROUND CONCENTRATION

Location: San Juan Basin
Coal production: 6.5×10^6 tons/year
Area disturbed: 548 acres/year
Method of overburden removal: dragline
Quantity of overburden removed: 46×10^6 yard^3/year
Method of dust control: water
TSP emissions: 6559 tons/year

Figure 50. ISC modeled annual geometric mean TSP concentrations, San Juan Basin.

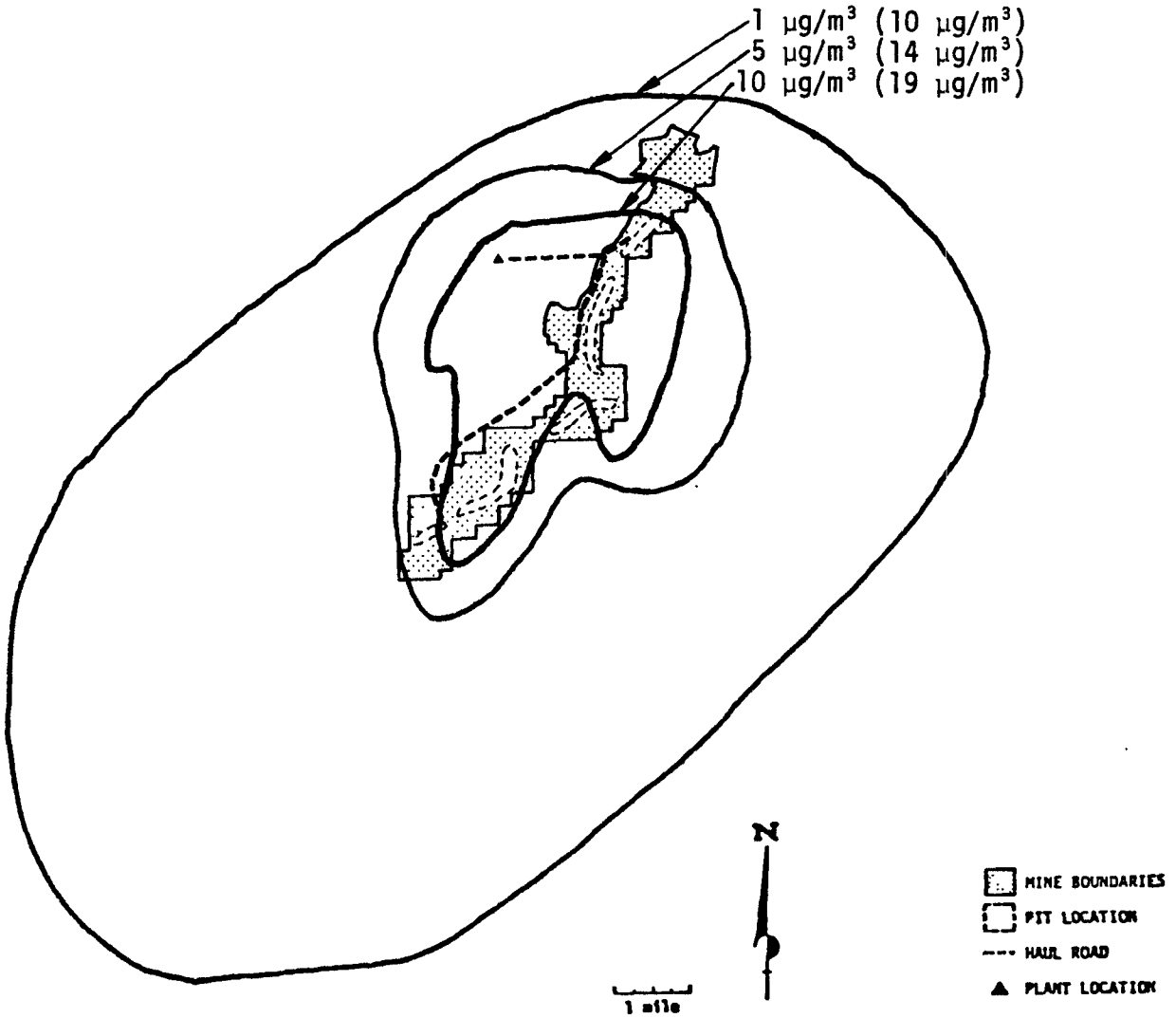

NOTE: NUMBER IN PARENTHESES INDICATES PREDICTED CONCENTRATION PLUS BACKGROUND CONCENTRATION

Location: San Juan Basin
Coal production: 6.5×10^6 tons/year
Area disturbed: 548 acres/year
Method of overburden removal: dragline
Quantity of overburden removed: 46×10^6 yard^3/year
Method of dust control: water
TSP emissions: 6559 tons/year

Figure 51. ISC modeled annual geometric mean PM 10 concentrations, San Juan Basin.

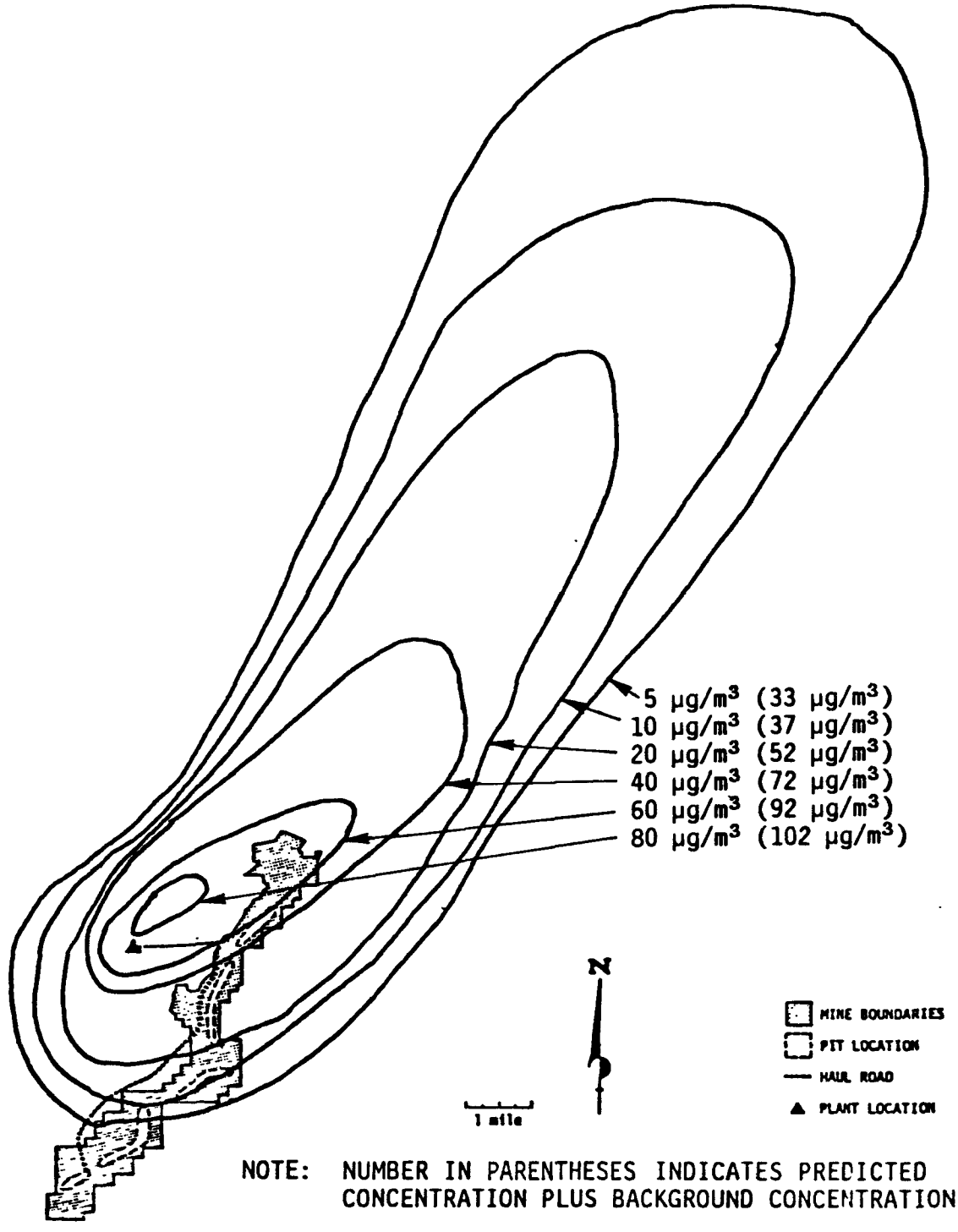

NOTE: NUMBER IN PARENTHESES INDICATES PREDICTED CONCENTRATION PLUS BACKGROUND CONCENTRATION

Location: San Juan Basin
Coal production: 2.2×10^4 tons/day
Area disturbed: 1096 acres
Method of overburden removal: dragline
Quantity of overburden removed: 1.59×10^5 yard^3/day
Method of dust control: water
TSP emissions: 1903 lbs/h

Figure 52. ISC modeled 24-hour TSP concentrations, San Juan Basin.

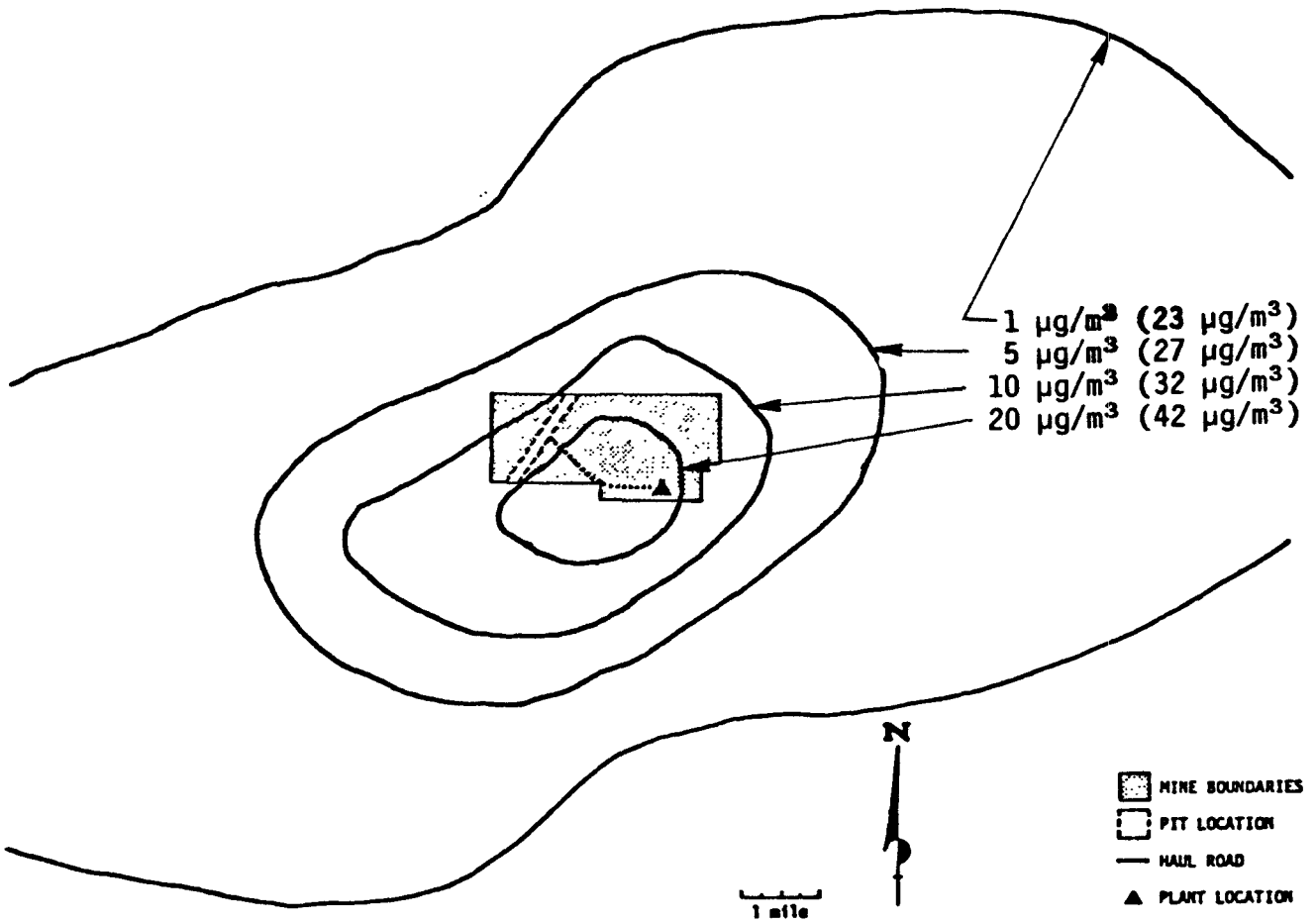

NOTE: NUMBER IN PARENTHESES INDICATES PREDICTED CONCENTRATION PLUS BACKGROUND CONCENTRATION

Location: Green River/Hams Fork Basin
Coal production: 3.55×10^6 tons/year
Area disturbed: 70 acres/year
Method of overburden removal: dragline
Quantity of overburden removed: 16.3×10^6 yard^3/year
Method of dust control: water
TSP emissions: 1286 tons/year

Figure 53. ISC modeled annual geometric mean TSP concentrations, Green River/Hams Fork Basin.

Figure 54: Green River/Hams Fork Basin, Annual TSP

Figure 55: Green River/Hams Fork Basin, Annual PM 10

Figure 56: Green River/Hams Fork Basin, 24-Hour TSP

Figure 57: Green River/Hams Fork Basin, 24-Hour PM 10

Table 23 indicates maximum concentration versus distance from the mine boundary for the annual and 24-hour time periods. Table 24 relates violations of the NAAQS and Class II PSD increments versus distance from the mine boundary.

Total suspended particulate concentrations at the mine boundary for the three scenarios all exceed the NAAQS and or PSD Class II increments. The Powder River Basin scenario violates both the annual and 24-hour NAAQS, as well as consumes all PSD Class II annual and 24-hour increment. The San Juan and Green River/Hams Fork Basin scenarios do not violate the primary or secondary NAAQS, but do consume all of the annual and 24-hour increment.

PM 10 concentrations were compared only to PSD increments. At the mine boundary, the Powder River Basin scenario consumes all of the annual and 24-hour increment, while the Green River/ Hams Fork Basin scenario consumes all the annual increment.

If surface mines were required to secure PSD permits, then the TSP concentrations compated in this modeling study at all of the scenario mines would exceed PSD increments. Furthermore, the modeling results suggest that PM 10 concentrations alone would exceed PSD increments at the Powder River Basin mine and at the Green River/Hams Fork Basin mine.

Throughout this discussion, a key factor in judging whether standards would be violated is the distance between the major mine particulate matter sources and the mine boundary. Because concentrations of TSP, and to a lesser extent PM 10, decrease dramatically with downwind distance, the proximity of pits and haul roads to the mine boundary may dictate whether a violation of standards is predicted off site. It would be misleading to assume that the problem of small separation distances between pits and mine boundaries may never occur, or would occur only in a small fraction of proposed surface coal mines, because just the opposite is true. Mineral recovery laws require that all of the recoverable coal within a permit boundary be mined, and to do this pits and haul roads must be situated adjacent to mine boundaries at some point during the life of the mine. The results of the modeling work presented in this report suggest that mine source and boundary configuration may be just as important a determinant in predicting whether a mine will meet standards as other factors such as annual production rate.

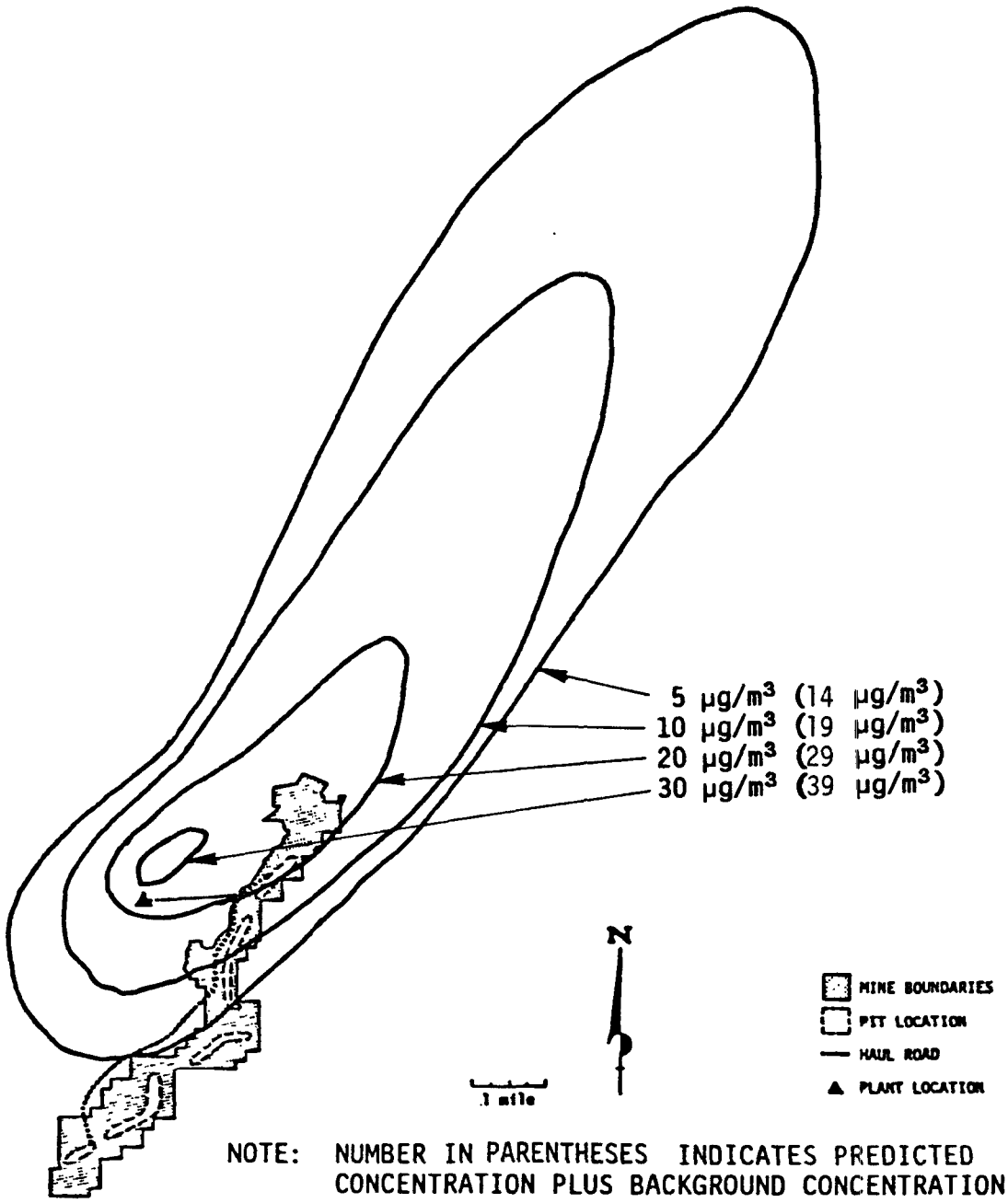

NOTE: NUMBER IN PARENTHESES INDICATES PREDICTED CONCENTRATION PLUS BACKGROUND CONCENTRATION

Location: San Juan Basin
Coal production: 2.2 x 10^6 tons/day
Area disturbed: 1096 acres
Method of overburden removal: dragline
Quantity of overburden removed: 1.59 x 10^6 yard^3/day
Method of dust control: water
TSP emissions: 1903 lbs/h

Figure 54. ISC modeled 24-hour PM 10 concentrations, San Juan Basin.

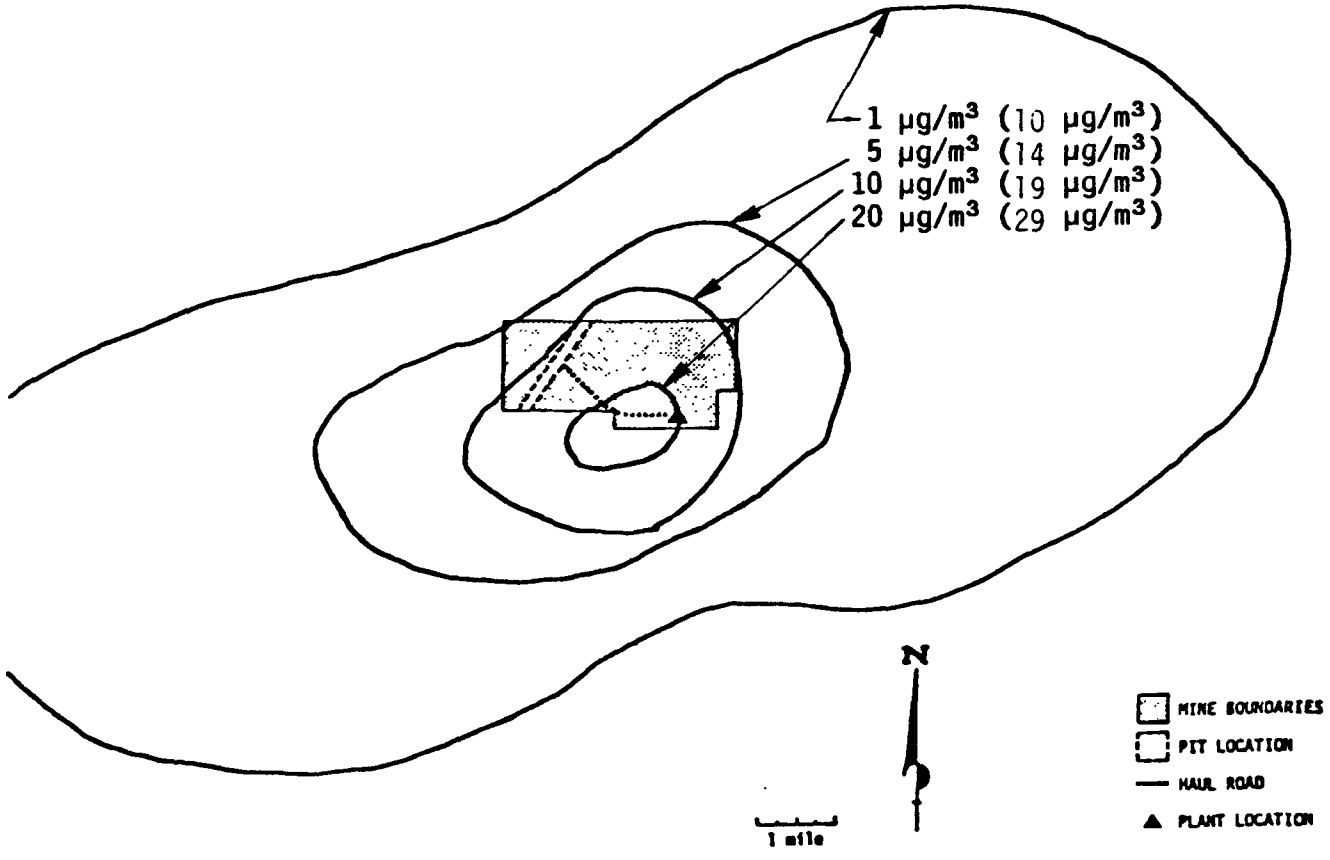

NOTE: NUMBER IN PARENTHESES INDICATES PREDICTED CONCENTRATION PLUS BACKGROUND CONCENTRATION

Location: Green River/Hams Fork Basin
Coal production: 3.55×10^6 tons/year
Area disturbed: 70 acres/year
Method of overburden removal: dragline
Quantity of overburden removed: 16.3×10^6 yard^3/year
Method of dust control: water
TSP emissions: 1286 tons/year

Figure 55. ISC modeled annual geometric mean PM 10 concentrations, Powder River Basin.

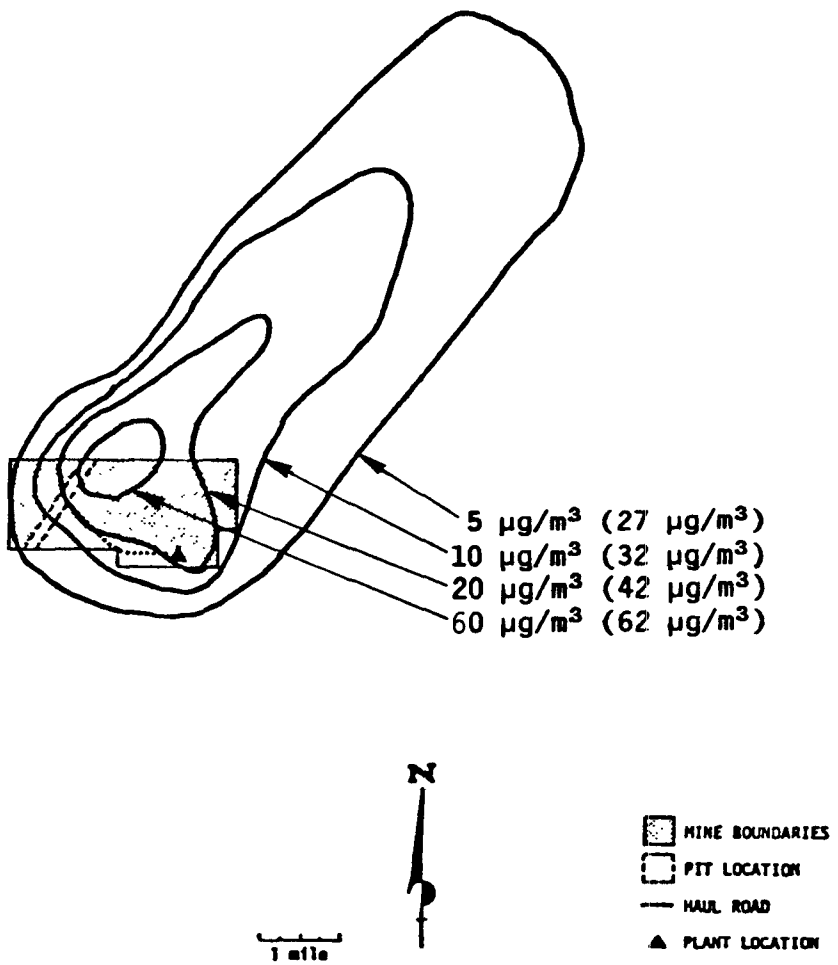

NOTE: NUMBER IN PARENTHESES INDICATES PREDICTED CONCENTRATION PLUS BACKGROUND CONCENTRATION

Location: Green River/Hams Fork Basin
Coal production: 1.2×10^4 tons/day
Area disturbed: 165 acres
Method of overburden removal: dragline
Quantity of overburden removed: 0.56×10^5 yard^3/day
Method of dust control: water
TSP emissions: 373 lbs/h

Figure 56. ISC modeled 24-hour TSP concentrations, Green River/Hams Fork Basin.

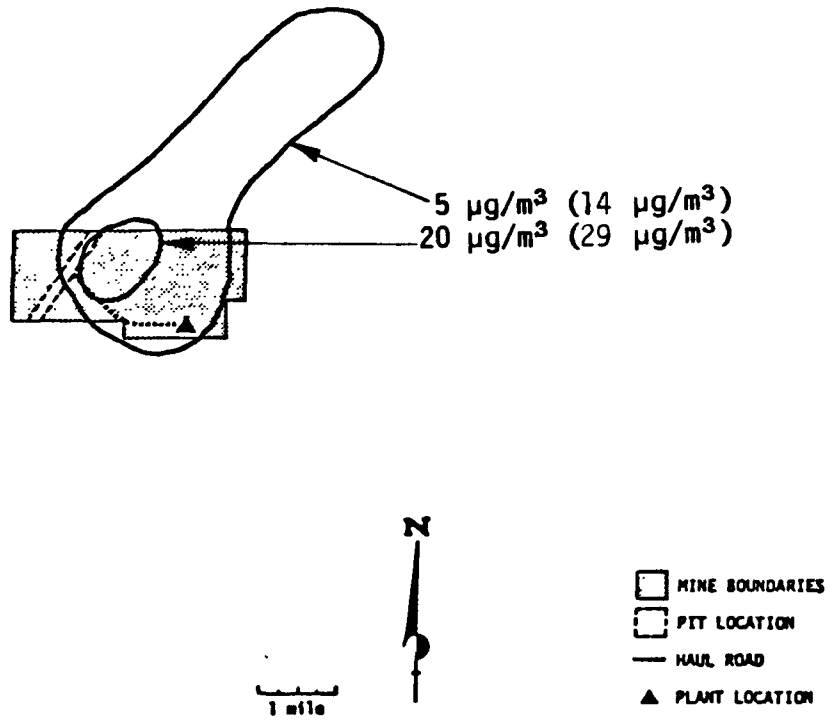

NOTE: NUMBER IN PARENTHESES INDICATES PREDICTED CONCENTRATION PLUS BACKGROUND CONCENTRATION

Location: Green River/Hams Fork Basin
Coal production: 1.2×10^4 tons/day
Area disturbed: 165 acres
Method of overburden removal: dragline
Quantity of overburden removed: 0.56×10^5 yard^3/day
Method of dust control: water
TSP emissions: 373 lbs/h

Figure 57. ISC modeled 24-hour PM 10 concentrations, Green River/Hams Fork Basin.

TABLE 23. MAXIMUM CONCENTRATION VERSUS DISTANCE BY SCENARIO, $\mu g/m^3$
(NO BACKGROUND CONCENTRATION ADDED)

Scenario	TSP						PM 10					
	At boundary	Distance from boundary, miles					At boundary	Distance from boundary, miles				
		1	2	3	4	5		1	2	3	4	5
Annual concentrations												
Powder River Basin	115	115	10	7	6	4	51	40	7	6	4	3
San Juan Basin	23	20	8	7	6	5	16	11	7	4	3	2
Green River/Hams Fork Basin	30	20	13	7	4	3	23	15	5	4	3	2
Second-highest 24-hour concentrations												
Powder River Basin	867	260	240	165	80	45	289	200	45	25	16	12
San Juan Basin	106	80	50	45	37	32	35	30	20	18	16	12
Green River/Hams Fork Basin	104	55	25	18	14	10	30	16	11	7	4	1

TABLE 24. VIOLATIONS OF THE NAAQS AND CLASS II PSD INCREMENTS

Scenario	TSP																		PM 10					
	Primary NAAQS[a]						Secondary NAAQS[a]						Class II increment						Class II increment					
	At boundary	Distance from boundary, miles					At boundary	Distance from boundary, miles					At boundary	Distance from boundary, miles					At boundary	Distance from boundary, miles				
		1	2	3	4	5		1	2	3	4	5		1	2	3	4	5		1	2	3	4	5
Annual concentrations																								
Powder River Basin	X	X					X	X					X	X					X	X				
San Juan Basin													X	X										
Green River/Hams Fork Basin													X	X					X					
Second-highest 24-hour concentrations																								
Powder River Basin	X	X					X	X	X	X			X	X	X	X	X	X	X	X	X			
San Juan Basin													X	X	X	X	X							
Green River/Hams Fork Basin													X	X										

[a] Background concentration added.

While no direct comparisons of the new techniques (emission factors and model) with the IPP/CDM (with fallout function) tools could be made, it appears that the new techniques result in higher concentrations over a larger area. This comparison should be studied further. Certainly one reason for the difference is that the EPA 1981 emission factors are higher than the IPP factors. There is also probably a difference in fallout functions that is also influencing comparative results.

4.4 POTENTIAL SOURCES OF ERROR IN THE PREDICTION PROCESS

The purpose of this subsection is to identify and evaluate sources of error in the predictive process of developing a particulate concentration. Six error categories are presented in Table 25. Ideally, each potential source of error in each category would be quantified with a ± error term. The error categories would in turn be combined into a ± error term. Unfortunately, a complete statistical analysis has never been attempted, and it is not within the scope of the present study. It is an area of recommended further research. At this time, the sensitivity of predicted concentrations to each error category is not even known. Therefore, this discussion will be limited to a qualitative analysis of each error category.

The first error category is the emission factors. More error analyses have been performed on this error category than perhaps any other. The average 80 percent confidence interval for the 1981 EPA TSP emission factors was calculated to be -20 to +24 percent when applied at western mines in the range of correction parameter conditions over which testing was conducted. Error analyses for the IPP, TRC, and AP-42 emission factors have not been performed. As important as the uncontrolled emission factor is the assumed control efficiency. Since the uncontrolled emission factor term is simply multiplied by a percentage control term for use in the emissions calculations, each term is of equal importance. Control efficiency testing has been very limited and the error band has not been comprehensively evaluated. Other sources of emission factor error are listed in Table 25.

The second error category is activity parameters. The controlled emission factor is multiplied by an activity parameter to estimate emissions. The first source of error is identifying all sources of particulate emissions. The very different source lists used in previous modeling exercises illustrate this problem. The level of source activity can be extremely difficult to predict, with predictions required for such parameters as vehicle miles traveled, grader speed, dragline drop distance, etc. Predictions of activity are probably more accurate for longer averaging periods.

TABLE 25. POTENTIAL SOURCES OF ERROR IN THE PREDICTIVE PROCESS FOR ESTIMATING PARTICULATE CONCENTRATIONS AROUND SURFACE COAL MINES

Error category	Potential sources of error
Emission factors	Measurement error in derivation of factors Errors in assumed values for independent variables Not all factors are based on actual field testing Applicability of factors to mines other than those tested Assumptions in particle size distributions Identification of independent variables affecting emission rates Control effectiveness assumptions Averaging time
Activity parameters	Ability to predict source types Ability to predict level of source activity Averaging time
Source location	Ability to predict location Ability to predict spatial extent of sources Release height Averaging time
Meteorological inputs	Windspeed Wind direction Stability class Dispersion parameters (σ_y, σ_z) Mixing height Representativeness of data over entire mine area Averaging time
Model-related	Gaussian dispersion algorithm Plume rise algorithm Deposition algorithm Effects of complex terrain Source representation (point, area, line) Effects of pit retention Receptor locations relative to assumed source locations Averaging time

(continued)

TABLE 25 (continued)

Error category	Potential sources of error
Verification	Measurement error of ambient monitors (hi-vol, particle sizing devices) Source/receptor relationship Representativeness of data Quality assurance program Conversion algorithm for model results (arithmetic to geometric mean) Background concentration Averaging time

Another error category is source location. Sensitivity of model results to errors in source location has not been quantified. Overprediction or underprediction of concentrations is possible, as well as errors in the location of predicted concentrations.

Meteorological inputs are required by the dispersion model and are the variables that determine dispersion. There are at least seven potential sources of error in this error category that impact predicted concentrations to an unknown degree.

Several semi-rigorous evaluations of model performance have been performed. Sources of error are listed in the table. While is was not possible to evaluate the overall accuracy of the model results, it is possible to discuss the relative accuracy of certain types of model applications. For example:

- Relative versus Absolute Application: Using a model as a predictive tool to project differences between two or more alternatives is inherently more accurate than attempting to calculate an absolute number.

- Magnitude versus Location: Models generally predict the magnitude of a concentration more accurately than the precise location of that magnitude because of inaccuracies in the meteorological fields used by the models.

- Long-Term versus Short-Term Estimates: The accuracy of calculated annual average concentrations is better than calculated worst-case 1-, 3-, or 24-hour concentrations because mean value is more accurately determined than extreme values (National Commission on Air Quality 1980).

Other model-related problems that are particularly troublesome are the inability to simulate the complex terrain often found in surface coal mining areas, and the influence of pit retention.

The final error category is verification. There are two problems that make it difficult to determine the accuracy of the predictive process. First, most air quality analyses are performed for mine permitting. The mine is not in operation and therefore there are no data to use to compare predicted impact versus actual monitored data. The second problem relates to the error in particulate measurement devices. If the predictive process were applied to an existing mine, it would still be difficult to obtain an accurate actual term. For example, collocated hi-vols often yield differences of >10 percent. Particle

sizing instruments have equal or greater error. The accuracy of measured concentrations has its own associated error bounds.

The preceding discussion illustrates that there are many potential sources of error, any of which can be quite large. In order to keep the model results in proper perspective, further research is needed to define the uncertainty in the predicted concentrations and the relationship of these uncertainties to the various sources of error shown in Table 25.

4.5 RELATIONSHIP OF SCENARIO RESULTS TO POSSIBLE REGULATORY OPTIONS

It is beyond the scope of this project to comprehensively evaluate the relationship of the scenario results to possible regulatory changes. However, four regulatory options are considered briefly. They are:

1. Apply additional dust controls to particulate sources.

2. Change PSD pollutant of measurement from TSP to PM 10.

3. Apply NAAQS and/or PSD increments at some distance beyond the mine boundary.

4. Change the period for comparison to standards from worst-case to a percentile or average period.

4.5.1 Additional Controls

Application of additional dust controls would reduce emission levels, and consequently, concentrations. Table 26 examines the level of control assumed for certain sources at the Powder River Mine and additional controls that could possibly be implemented if cost and other environmental effects were totally neglected. For example, in the scenario analyses, controls were assumed for only haul and access roads, and the coal preparation facility. Other sources are conceivably controllable, but are usually not controlled due to the nature of the sources and the costs associated with the controls. The control methods and efficiencies beyond those assumed in the scenario analysis shown in Table 26 are purely theoretical and should not be construed as being practical or accurate. Additional research is needed to determine whether or not the controls are feasible, and if feasible what level of control could be achieved. Table 26 is included as an extreme example of the maximum level of emissions control conceivable.

Using a simple rollback technique, the effect of these additional controls on predicted concentations was examined for

TABLE 26. IMPACT OF ADDITIONAL PARTICULATE CONTROLS ON EMISSIONS, POWDER RIVER BASIN SCENARIO EXAMPLE

Sources controlled in scenario analysis					Sources not controlled in scenario analysis: Sources physically able to be controlled,[a] not generally controlled due to cost, or environmental reasons					Sources that cannot practically be controlled[b]	
Source	Uncontrolled emissions, tons/year	Control	Estimated percent control	Controlled emissions, tons/year	Source	Uncontrolled emissions, tons/year	Control	Estimated percent control	Controlled emissions, tons/year	Source	Uncontrolled emissions, tons/year
Haul truck-overburden	2434.8	Water	50	1217.4	Overburden drilling	2.9	Negative pressure	90	0.3	Topsoil removal	9.7
Haul truck-coal	7904.4	Water	50	3952.2	Haul truck-overburden[c]	2434.8	Chemical	85	365.2	Topsoil dump	3 2
Coal dump	900.0	Water spray	50	450.0	Haul truck-coal[c]	7904.4	Chemical	85	1185.7	Overburden blasting	1 2
Access road	150.0	Paved	99	1.5	Coal dump[c]	900.0	Negative pressure	85	135.0	Overburden removal	693 8
Crushing, screening, conveying, coal storage	657.0	Enclosed, baghouse	99	65.7	Coal drilling	1.0	Negative pressure	90	0 1	Overburden replacement	391 5
					Lt.- and med.-duty vehicles	664.1	Chemical	85	99.6	Dozers - overburden	43.7
					Scraper travel	76.3	Chemical	85	11.4	Coal blasting	2.1
					Wind erosion semi-permanent[d]	58 9	Chemical	85	8.8	Graders	3.4
					Coal loadout	350.0	Enclosed, negative pressure, baghouse	95	17.5	Dozers - coal	14.2
										Wind erosion temporary[d]	58 9
Total mine emissions, all sources	14662.4			8303.0		14662.4			3353.0		
Percent control				43.4					77.1		

[a] Ability to control may vary by mine. Control may be prohibitively expensive or have other environmental adverse impacts.
[b] Practicality is judgmental. Control would slow or make operation impossible.
[c] Assumed controlled in scenario analysis, but graater control possible.
[d] Assumes 1/2 of total exposed area.

each of the three scenarios. These results appear in Table 27. Three very critical assumptions make the results only approximations: (1) the controls, which are far greater than any in place at an existing mine, are feasible, (2) the control efficiencies are accurate, and (3) concentration reductions are directly related to emission reductions. Consequently, the results should be considered with a high degree of skepticism.

Even with the extreme level of control, TSP concentrations with the Powder River Basin scenario would be more than twice the PSD Class II increment. PM 10 concentrations would also consume all of the PSD Class II increment.

4.5.2 Change PSD Pollutant of Measurement from TSP to PM 10

Repeated reference throughout the report has been made to the possibility of changing the PSD pollutant of measurement from TSP to PM 10. Because PM 10 concentrations are significantly lower than TSP concentrations, this has the affect of making the PSD increments less restrictive.

Tables 23 and 24, which summarize the scenario analysis, indicate that PM 10 at two of the three mines examined would still consume all of the increment at the mine boundary, although by a much smaller margin than if TSP concentrations were used for the comparison. Certainly, however, more mines could obtain PSD permits if this change was made.

4.5.3 Apply NAAQS and/or PSD Increments at some Distance Beyond the Mine Boundary

Another possible regulatory option is to apply the NAAQS and/or PSD increments at some distance beyond the mine boundary. Possible justifications are that high concentrations decrease rapidly with distance, and that the worst-case conditions (where major dust producing activities are adjacent to the boundary resulting in maximum off-site concentrations) may not be indicative of concentrations over the mine life.

It would probably be difficult to use this concept for application of the NAAQS since they are health-related standards. Public access would be possible to areas where concentrations exceeded healthful concentrations. Conversely, if the PSD program is viewed as a resource allocation program (as opposed to protecting human health), is may be reasonable to apply the increment consumption determination at some distance beyond the boundary.

The consequences of applying the increment determination at distances beyond the mine boundary can be examined by refering to the results of the scenario analysis summarized in previously

TABLE 27. IMPACT OF ADDITIONAL PARTICULATE CONTROLS ON MAXIMUM OFF-SITE CONCENTRATIONS

Scenario	Parameters from scenario analysis			Parameters with additional controls[a]		
	TSP emissions, tons/year	Max. annual off-site concentration, μg/m³		TSP emissions, tons/year	Max. annual off-site concentration,[b] μg/m³	
		TSP	PM 10		TSP	PM 10
Powder River Basin	8303	115	51	3353	46	21
San Juan Basin	6559	23	16	3752	13	9
Green River/Hams Fork Basin	1286	30	23	764	18	14

[a] Additional controls listed in Table 4-13. Control may be prohibitively expensive or have adverse environmental impacts.

[b] Based on rollback method, not dispersion modeling. Results should be regarded as preliminary and approximate.

cited Table 24. Regarding TSP concentrations, the 24-hour increment would still be a restraint as far as four to five miles beyond the mine boundary. However, if PM 10 concentrations were used to compare to increment consumption, a two mile buffer around a mine boundary would allow even the Powder River Basin scenario mine to receive a permit.

4.5.4 Change the Period for Comparison to Standards from Worst-Case to a Percentile or Average Period

Several of the analyses in this report have shown that worst-case off-site concentrations occur when the major dust-producing activities are located adjacent to the mine boundary. During this period, off-site concentrations can be two to three times greater than when the major dust-producing activities are not near the mine boundary. Thus some period shorter than the mine life dictates maximum concentrations that will be permitted throughout the mine life.

The percentage of the time that the major dust producing activities, such as the pit, are adjacent to the mine boundary, is a function of several parameters. These include the shape of the mine (square versus long and narrow), regularity of boundaries, ratio of the pit area to the size of the mine, and mining method. Virtually no two mines would be the same, and many would not even fall within the same range.

After a very preliminary analysis, the system appears to be impossible to implement during the preliminary mine planning stages. After the pit locations have been delineated, the computational procedure would be extremely cumbersome.

SECTION 5.0

SYNTHESIS OF THREE APPROACHES TO CHARACTERIZE PM 10 AND TSP AIR QUALITY AROUND WESTERN SURFACE COAL MINES

5.1 INTRODUCTION

Three approaches to characterizing PM 10 and TSP air quality around western surface coal mines are utilized in this report. ideally, a direct comparison of results from the three methods would be applied to several existing identifiable mines, i.e., monitoring, IPP/CDM modeling results, and EPA 1981/ISC modeling results could be directly compared. Unfortunately, this could not be accomplished with existing data. No mine was found that had coincident measured and modeled concentration data. The comparative study would be useful but additional monitoring data are required before the comparisons could be made (see Section 6.0, Need for Further Study). Some limited comparisons are made below.

5.2 COMPARISON OF ALTERNATE APPROACHES

A comparison of the three alternate approaches is presented in Figures 58 and 59. The data plotted in these figures represent maximum mine boundary concentrations as a function of annual production. Background concentrations have been removed from all data so that the results could be compared.

The results are in relative agreement when considering the possible causes of data scatter. These are:

1. Maximum boundary concentrations vary over time and are only an approximate indicator of air quality impact since both total emissions and resulting concentrations are a function of a number of variables: annual production, mine configuration, acres disturbed per year, and other factors.

2. Ambient monitors are seldom located to measure maximum fenceline concentrations. This would cause the monitored data to appear lower than the model results.

3. The previous modeling and scenario modeling used different emission factors and models.

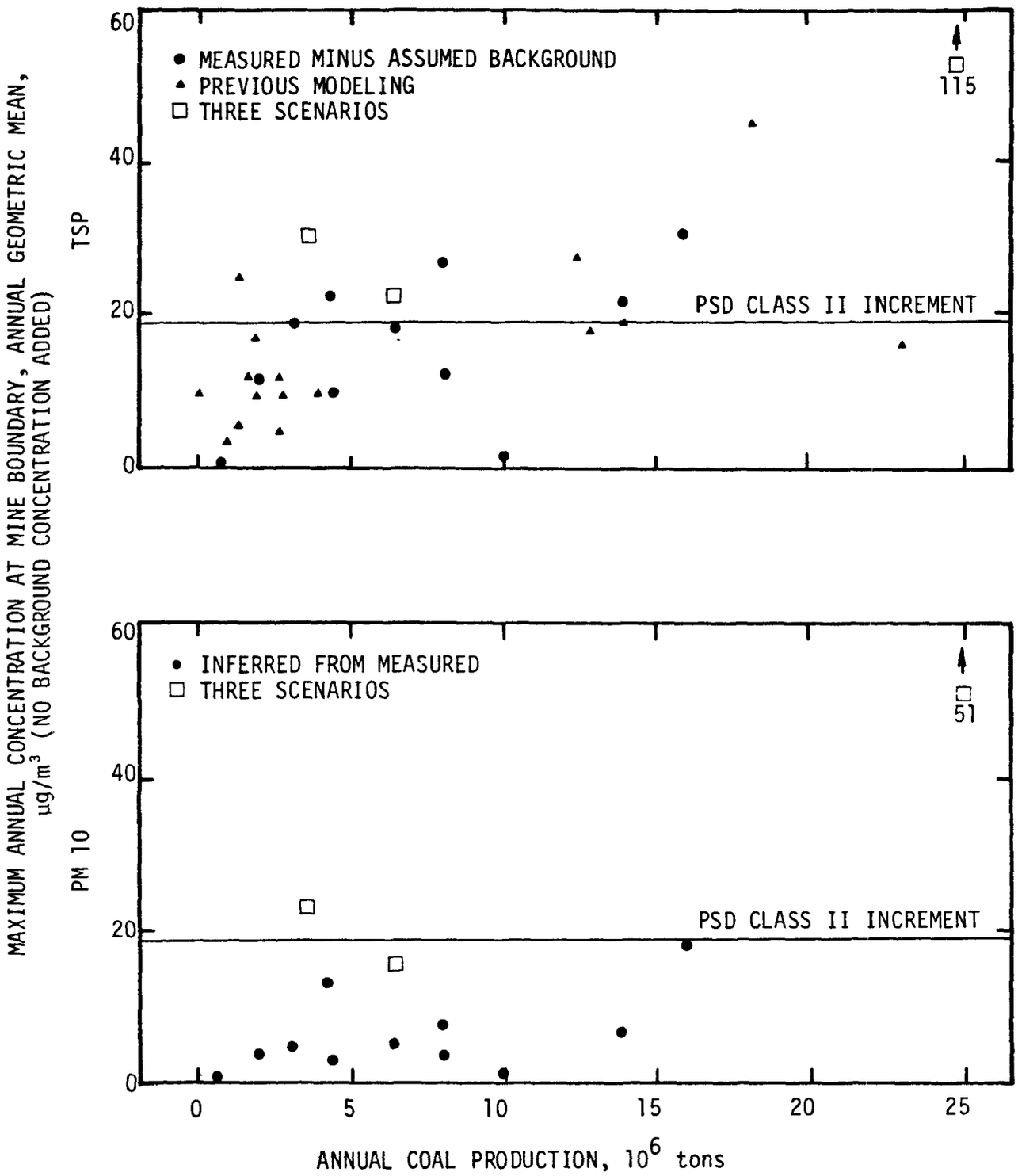

Figure 58. Maximum annual geometric mean concentrations at mine boundary--TSP and PM 10.

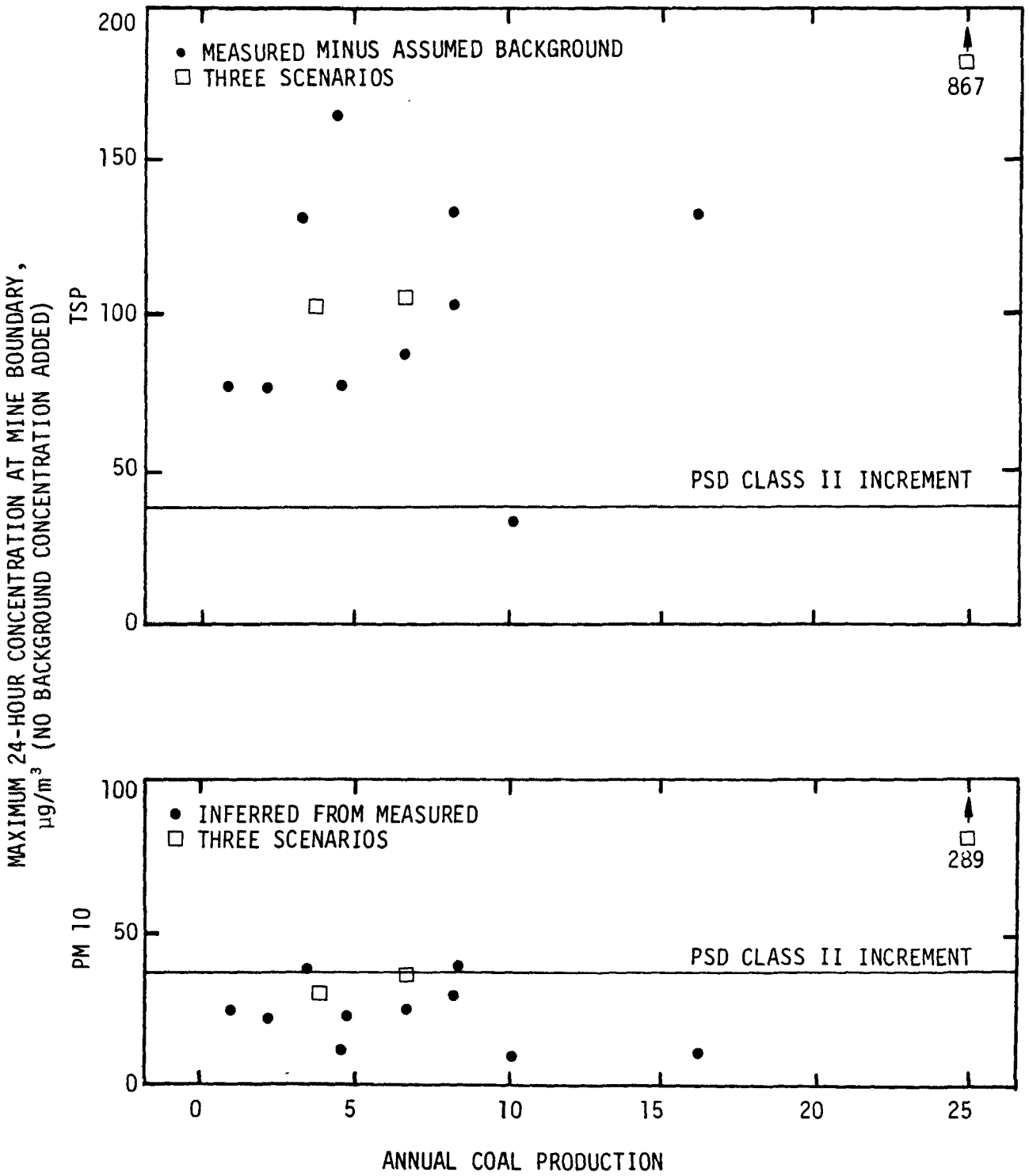

Figure 59. Maximum 24-hour concentrations at mine boundary--TSP and PM 10.

Figures 58 and 59 are a graphic summary of the conclusions set forth in Sections 2.0 through 4.0. The NAAQS are constraining only for very large mines. The PSD Class II increments are considerably more constraining, particularly the 24-hour increments.

SECTION 6.0

NEED FOR FURTHER STUDY

The need for further research became apparent at several points in the study. The importance of the problem is related to (1) the proximity of western surface coal mines to Class I lands and other areas of relatively pristine air quality; and (2) the importance of the surface coal mining industry to the nations energy and economic welfare.

Further study can be divided into five broad categories. These are:

1. Additional monitoring.

2. Analysis of deficiencies in the predictive process.

3. Impact of additional particulate control measures and alternate mine configurations on concentrations.

4. Standardized methods.

5. Regulatory implications.

6. Development of better PM 10 measurement methods.

A brief outline of study for each category is presented in this section.

6.1 ADDITIONAL MONITORING

Additional monitoring and monitoring methods are required to meet three objectives. These are:

- Quantify pit retention. The impact of pit retention, while acknowledged in principle by most investigators, has not been conclusively quantified. No allowance for pit retention is allowed in the permitting process. It is desirable to quantify pit retention so that impacts are not overpredicted.

- Monitor PM 10 concentrations. PM 10 sampling data are very limited. Monitored PM 10 data are required at impacted and background sites to adequately characterize PM 10 concentrations around surface coal mines.

- Measure the change in concentration with distance and model validation. There are very little sampling data to measure the change in concentration over distance. Theoretical dispersion models have been used to simulate deposition. Measured particle size specific values could be used to validate dispersion models.

Such a monitoring program could best be carried out in the Powder River Basin where the largest monitored TSP data base exists. PM 10 monitors could be collocated at existing TSP monitoring locations. Other collocated samplers could be located around pits, at mine boundaries, and beyond. Such a sampling array at one to three mines would allow achievement of all three objectives.

6.2 DEFICIENCIES IN THE PREDICTIVE PROCESS

The predictive process for projecting particulate concentrations is a multistep process. Six error categories are emission factors, activity parameters, source locations, meteorological inputs, dispersion modeling (including deposition and pit retention), and model verification. Within each error category are several sources of error (see previously cited Table 21). Ideally, potential source of error in each category would be quantified with a ± error term. All sources of error would then be combined into a ± error term which described the reliability of the predictive process. This analysis has never been conceived of in this comprehensive form.

The error analysis should be undertaken for annual predictions and for 24-hour predictions. It is likely that short-term predictions are considerably less accurate than annual predictions. The error associated with 24-hour predictions may invalidate their legitimate use for determining compliance with standards.

6.3 IMPACT OF ADDITIONAL CONTROL MEASURES AND ALTERNATE MINE CONFIGURATIONS ON CONCENTRATIONS

The scenario analysis in this report was performed based on a specified level of control measures and assuming certain mine configurations. The sensitivity of concentrations to incremental changes in particulate controls, and to changes in mine configuration, has never been comprehensively analyzed. The objective of

this research would be to identify the principles that would allow optimization of mine controls and layout from an air quality perspective.

6.4 STANDARDIZED METHODS

All new mines must apply for various air quality related permits at the state and/or federal levels. Issuance of the permits is usually contingent upon prediction of air quality levels and attainment of standards. While the standards are relatively uniform across the county, the method to predict concentrations is not standardized.

This is particularly critical for short-term predictions and would be critical for PM 10 predictions if they were required. To illustrate with 24-hour predictions, guidance is required on how to define 24-hour meteorological conditions, 24-hour activity parameters, and source locations. Variation in practice for these three parameters alone can result in differences in projected concentrations by several orders of magnitude for the same mine. This would nullify the creditibility of regulatory review. Likewise, an initial particle size distribution is very important to PM 10 predictions, as well as several other possible variations in the analysis procedure.

6.5 REGULATORY IMPLICATIONS

A number of regulatory changes are currently being explored by EPA and others. The changes revolve primarily around a particle size specific standard for the NAAQS and/or PSD process, and fugitive emissions and the PSD process. These regulatory changes have high potential to drastically impact the ability of a new mine to obtain the necessary permits, and may also influence existing mines.

The regulatory impact on the following parameters should be investigated as a minimum.

- Coal production by region.
- Coal production costs
- Impact on ambient concentrations near mines.
- Impact on Class I lands.
- Economic impact.

REFERENCES

Burt. 1977. Valley Model User's Guide.

Environmental Protection Agency. 1978a. Interim Policy Paper on the Air Quality Review of Surface Mining Operations. Environmental Protection Agency, Region VIII, Denver, Colorado.

Environmental Protection Agency. 1978b. User's Guide for PAL. EPA-600/4-78-013.

Environmental Protection Agency. 1978c. User's Guide for RAM. EPA-600/8-78-016a.

Environmental Protection Agency. 1979. Industrial Source Complex (ISC) Dispersion Model User's Guide. EPA-450/4-79-031.

Environmental Protection Agency. 1980. Compilation of Air Pollutant Emission Factors. Third Edition, AP-42.

Environmental Research & Technology, Inc. 1979. A comparison of Alternate Approaches for Estimation of Particulate Concentrations Resulting from Coal Strip Mining Activities in Northeastern Wyoming. Prepared for U.S. Department of Energy.

National Commission on Air Quality. 1980. Summary Report of the NCAQ Atmospheric Dispersion Modeling Panel Volume 1, Recommendations. NTIS Publication No. PB80-174964.

PEDCo Environmental, Inc. 1978. Survey of Fugitive Dust from Coal Mines. Prepared for Environmental Protection Agency, Region VIII, Denver, Colorado.

PEDCo Environmental, Inc. 1981a. Improved Emission Factors for Fugitive Dust from Western Surface Coal Mining Sources.

PEDCo Environmental, Inc. 1981b. Nomograph Method for Determining Impact of TSP Concentrations Resulting from Surface Coal Mining in Colorado.

PEDCo Environmental, Inc. 1981c. Nomograph Method for Determining Impact of TSP Concentrations Resulting from Surface Coal Mining in Wyoming.

Radian Corporation. 1979. Influence of Alternate Definitions of Exempt Fugitive Dust Sources on the Impact of PSD Regulations on Surface Coal Mines.

State of Wyoming, Division of Air Quality. 1979. Guideline for Fugitive Dust Emission Factors for Mining Activities.

TRC Environmental Consultants, Inc. 1981. Coal Mining Emission Factor Development and Modeling Study.

Turner. 1969. Workbook of Atmospheric Dispersion Etimates. PHS Publication No. 999-AP-26.

APPENDIX A

MASS FRACTION CALCULATIONS DERIVED FOR SECTION 2.0 PROCEDURE TO INFER PM 10 CONCENTRATIONS FROM MEASURED TSP DATA

ISCST RESULTS, 0-2.5 μm
(μg/m³)

STABILITY	WIND SPEED (mps)	1000m	1500	2000	3000	4500	7000	10,000	15,000	20,0
A	0.75	16.2	4.98	2.47	1.08	0.84	0.60	0.45	0.32	0.25
B		69.61	32.28	21.19	12.39	6.90	3.25	1.67	0.77	0.44
C		131.68	68.38	46.16	28.59	18.24	10.36	6.03	3.07	1.86
D		245.3	158.95	115.08	77.84	56.16	39.81	28.49	18.11	12.58
A	2.50	4.86	1.50	0.74	0.32	0.25	0.18	0.13	0.10	0.07
B		20.88	9.68	6.36	3.72	2.07	0.97	0.50	0.23	0.13
C		39.50	20.51	13.85	8.58	5.47	3.11	1.81	0.92	0.56
D		73.56	47.67	34.51	23.34	16.84	11.94	8.54	5.43	3.77
A	4.30	2.83	0.87	0.43	0.19	0.15	0.10	0.08	0.06	0.04
B		12.14	5.63	3.70	2.16	1.20	0.57	0.29	0.13	0.77
C		22.97	11.92	8.05	4.99	3.18	1.81	1.05	0.54	0.33
D		42.77	27.71	20.06	13.57	9.79	6.94	4.97	3.16	2.19
A	6.80	1.79	0.55	0.27	0.12	0.092	0.066	0.049	0.035	0.027
B		7.68	3.56	2.34	1.37	0.76	0.36	0.18	0.085	0.049
C		15.19	7.89	5.33	3.30	2.10	1.20	0.70	0.35	0.22
D		27.04	17.52	12.69	8.58	6.19	4.39	3.14	2.00	1.39
A	9.50	1.28	0.39	0.19	0.085	0.066	0.048	0.035	0.025	0.020
B		5.50	2.55	1.67	0.98	0.54	0.26	0.13	0.061	0.035
C		10.39	5.40	3.64	2.26	1.44	0.82	0.48	0.24	0.15
D		19.36	12.54	9.08	6.14	4.43	3.14	2.25	1.43	0.99
A	12.50	0.97	0.30	0.15	0.065	0.050	0.036	0.027	0.019	0.015
B		4.18	1.94	1.27	0.74	0.41	0.19	0.10	0.046	0.026
C		7.90	4.10	2.77	1.72	1.09	0.62	0.36	0.18	0.11
D		14.71	9.53	6.90	4.67	3.37	2.39	1.71	1.09	0.75

ISCST RESULTS, 2.5-5 μm
(μg/m³)

STABILITY	WIND SPEED (mps)	1000m	1500	2000	3000	4500	7000	10,000	15,000	20,000
A	0.75	16.13	4.96	2.45	1.07	0.83	0.59	0.43	0.29	0.20
B		69.28	32.13	21.09	12.33	6.87	3.23	1.66	0.76	0.44
C		131.09	68.09	45.97	28.47	18.16	10.31	6.00	3.05	1.85
D		244.53	158.79	115.02	77.80	56.11	39.74	28.41	18.03	12.51
A	2.50	4.84	1.49	0.74	0.32	0.25	0.18	0.13	0.09	0.06
B		20.78	9.64	6.33	3.70	2.06	0.97	0.50	0.23	0.13
C		39.31	20.41	13.78	8.54	5.44	3.09	1.80	0.92	0.56
D		73.24	47.49	34.39	23.26	16.78	11.89	8.51	5.41	3.76
A	4.30	2.81	0.87	0.43	0.19	0.14	0.10	0.07	0.05	0.040
B		12.08	5.60	3.68	2.15	1.20	0.56	0.29	0.13	0.07
C		22.86	11.87	8.01	4.96	3.17	1.80	1.05	0.53	0.32
D		42.57	27.59	19.98	13.51	9.75	6.91	4.95	3.14	2.18
A	6.80	1.78	0.55	0.27	0.12	0.091	0.065	0.047	0.031	0.02
B		7.64	3.54	2.33	1.36	0.76	0.36	0.18	0.08	0.04
C		15.12	7.85	5.30	3.28	2.09	1.19	0.69	0.35	0.21
D		26.91	17.44	12.63	8.54	6.16	4.37	3.13	1.99	1.38
A	9.50	1.27	0.39	0.19	0.084	0.065	0.046	0.034	0.023	0.016
B		5.47	2.54	1.66	0.97	0.54	0.26	0.13	0.060	0.035
C		10.34	5.37	3.63	2.25	1.43	0.81	0.47	0.24	0.15
D		19.26	12.48	9.04	6.11	4.41	3.13	2.24	1.42	0.99
A	12.50	0.97	0.30	0.15	0.064	0.050	0.035	0.026	0.017	0.01
B		4.16	1.93	1.27	0.74	0.41	0.19	0.10	0.046	0.02
C		7.86	4.08	2.76	1.71	1.09	0.62	0.36	0.18	0.11
D		14.64	9.49	6.87	4.65	3.35	2.38	1.70	1.08	0.75

ISCST RESULTS, 5-10 μm
(μg/m³)

STABILITY	WIND SPEED (mps)	1000m	1500	2000	3000	4500	7000	10,000	15,000	20,00
A	0.75	15.08	4.63	2.29	0.99	0.73	0.44	0.25	0.10	0.05
B		64.79	30.05	19.72	11.53	6.42	3.02	1.56	0.71	0.41
C		122.76	63.81	43.05	26.64	16.97	9.63	5.50	2.85	1.73
D		230.10	150.11	108.69	73.22	52.42	36.66	25.85	16.0	10.90
A	2.50	4.52	1.39	0.69	0.30	0.22	0.13	0.07	0.03	0.01
B		19.43	9.01	5.91	3.46	1.93	0.91	0.47	0.21	0.12
C		36.7	19.10	12.89	7.98	5.09	2.89	1.68	0.86	0.52
D		68.60	44.56	32.28	21.83	15.74	11.14	7.96	5.05	3.50
A	4.30	2.63	0.81	0.40	0.17	0.13	0.08	0.04	0.018	0.008
B		11.29	5.24	3.44	2.01	1.12	0.53	0.27	0.12	0.071
C		21.37	11.10	7.49	4.64	2.96	1.68	0.98	0.50	0.30
D		39.84	25.85	18.72	12.67	9.14	6.47	4.63	2.94	2.04
A	6.80	1.66	0.51	0.25	0.11	0.08	0.049	0.028	0.011	0.0054
B		7.14	3.31	2.17	1.27	0.71	0.33	0.17	0.079	0.045
C		14.13	7.34	4.95	3.07	1.96	1.11	0.65	0.33	0.20
D		25.18	16.33	11.82	8.00	5.77	4.09	2.93	1.86	1.29
A	9.50	1.19	0.37	0.18	0.078	0.057	0.035	0.020	0.0082	0.0038
B		5.11	2.37	1.56	0.91	0.51	0.24	0.12	0.056	0.032
C		9.67	5.02	3.39	2.10	1.34	0.76	0.44	0.23	0.14
D		18.02	11.68	8.46	5.72	4.13	2.93	2.09	1.33	0.92
A	12.50	0.90	0.28	0.14	0.059	0.044	0.027	0.015	0.0062	0.0029
B		3.88	1.80	1.18	0.69	0.39	0.18	0.093	0.043	0.025
C		7.34	3.82	2.58	1.60	1.02	0.58	0.34	0.17	0.10
D		13.69	8.87	6.43	4.35	3.14	2.22	1.59	1.01	0.70

ISCST RESULTS, 10-15 μm
(μg/m³)

STABILITY	WIND SPEED (mps)	1000m	1500	2000	3000	4500	7000	10,000	15,000	20,000
A	0.75	14.35	4.41	2.18	0.94	0.66	0.37	0.18	0.07	0.03
B		61.73	28.62	18.77	10.95	6.09	2.87	1.48	0.68	0.39
C		117.27	60.91	40.97	25.21	15.97	9.01	5.22	2.65	1.60
D		222.05	144.81	103.38	67.21	45.54	29.22	18.73	9.92	5.80
A	2.50	4.31	1.32	0.65	0.28	0.20	0.111	0.05	0.02	0.01
B		18.49	8.58	5.63	3.29	1.83	0.86	0.44	0.20	0.12
C		35.03	18.21	12.29	7.60	4.85	2.75	1.60	0.81	0.49
D		65.59	42.76	30.97	20.89	15.00	10.53	7.46	4.66	3.19
A	4.30	2.50	0.77	0.38	0.16	0.12	0.064	0.032	0.011	0.005
B		10.75	4.99	3.27	1.91	1.07	0.50	0.26	0.12	0.068
C		20.35	10.57	7.14	4.42	2.82	1.60	0.93	0.47	0.29
D		38.02	24.73	17.92	12.11	8.72	6.16	4.40	2.78	1.92
A	6.80	1.58	0.49	0.24	0.10	0.073	0.040	0.020	0.0073	0.003
B		6.70	3.15	2.07	1.21	0.67	0.32	0.16	0.075	0.04
C		13.46	7.00	4.72	2.92	1.86	1.06	0.62	0.31	0.19
D		24.00	15.59	11.20	7.64	5.51	3.90	2.79	1.77	1.23
A	9.50	1.13	0.35	0.17	0.074	0.052	0.029	0.014	0.0052	0.00
B		4.86	2.26	1.48	0.87	0.48	0.23	0.12	0.054	0.03
C		9.20	4.78	3.23	2.00	1.27	0.72	0.42	0.21	0.13
D		17.17	11.14	8.07	5.46	3.94	2.79	2.00	1.27	0.88
A	12.50	0.86	0.26	0.13	0.056	0.040	0.022	0.011	0.0039	0.00
B		3.70	1.71	1.13	0.66	0.37	0.17	0.089	0.041	0.02
C		6.99	3.63	2.45	1.52	0.97	0.55	0.32	0.16	0.09
D		13.04	8.46	6.13	4.15	2.99	2.12	1.52	0.96	0.67

ISCST RESULTS, 15-20 μm
(μg/m³)

STABILITY	WIND SPEED (mps)	1000m	1500	2000	3000	4500	7000	10,000	15,000	20,00
A	0.75	14.03	4.31	2.13	0.91	0.63	0.34	0.16	0.06	0.02
B		60.42	27.95	18.28	10.64	5.91	2.78	1.43	0.66	0.38
C		115.13	59.33	39.50	23.93	14.93	8.31	4.76	2.39	1.43
D		220.51	139.50	94.14	54.22	30.64	14.85	7.00	2.22	0.79
A	2.50	4.21	1.29	0.64	0.27	0.19	0.10	0.05	0.02	0.01
B		18.09	8.39	5.50	3.22	1.79	0.84	0.43	0.20	0.11
C		34.30	17.83	12.02	7.43	4.72	2.68	1.55	0.79	0.48
D		64.54	42.18	30.45	20.34	14.37	9.83	6.77	4.04	2.64
A	4.30	2.45	0.75	0.37	0.16	0.11	0.059	0.028	0.0097	0.0043
B		10.51	4.88	3.20	1.87	1.04	0.49	0.25	0.12	0.066
C		19.91	10.35	6.98	4.32	2.75	1.56	0.91	0.46	0.28
D		37.31	24.34	17.62	11.88	8.51	5.96	4.21	2.62	1.78
A	6.80	1.55	0.48	0.24	0.10	0.070	0.037	0.018	0.0062	0.0027
B		6.64	3.08	2.02	1.18	0.66	0.31	0.16	0.073	0.042
C		13.16	6.84	4.62	2.86	1.82	1.03	0.60	0.31	0.19
D		23.52	15.31	11.09	7.50	5.39	3.80	2.71	1.71	1.18
A	9.50	1.11	0.34	0.17	0.072	0.050	0.027	0.013	0.0044	0.0019
B		4.76	2.21	1.45	0.85	0.47	0.22	0.11	0.052	0.030
C		9.00	4.68	3.16	1.95	1.25	0.71	0.41	0.21	0.13
D		16.81	10.93	7.92	5.35	3.86	2.73	1.95	1.23	0.85
A	12.50	0.84	0.26	0.13	0.055	0.038	0.020	0.0096	0.0033	0.0015
B		3.61	1.68	1.10	0.64	0.36	0.17	0.087	0.040	0.023
C		6.84	3.55	2.40	1.49	0.95	0.54	0.31	0.16	0.097
D		12.76	8.29	6.01	4.06	2.93	2.07	1.48	0.94	0.65

ISCST RESULTS, 20-30 μm
(μg/m³)

STABILITY	WIND SPEED (mps)	1000m	1500	2000	3000	4500	7000	10,000	15,000	20,000
A	0.75	13.38	4.11	2.03	0.86	0.58	0.29	0.13	0.04	0.02
B		57.70	26.38	17.09	9.84	5.43	2.54	1.31	0.60	0.35
C		110.22	54.47	34.70	19.71	11.58	6.08	3.34	1.60	0.94
D		213.19	112.25	58.46	19.87	5.15	0.75	0.096	0.0034	0.00015
A	2.50	4.01	1.23	0.61	0.26	0.17	0.09	0.04	0.01	0.01
B		17.27	8.00	5.25	3.06	1.70	0.80	0.41	0.19	0.11
C		32.83	17.04	11.44	7.02	4.44	2.50	1.45	0.73	0.44
D		62.34	40.51	28.69	18.31	12.06	7.41	4.53	2.21	1.20
A	4.30	2.33	0.72	0.35	0.15	0.10	0.050	0.022	0.0073	0.0032
B		10.03	4.65	3.05	1.78	0.99	0.47	0.24	0.11	0.063
C		19.03	9.89	6.67	4.12	2.62	1.48	0.86	0.44	0.26
D		35.87	23.45	16.89	11.22	7.85	5.30	3.59	2.09	1.33
A	6.80	1.48	0.45	0.22	0.095	0.064	0.032	0.014	0.0046	0.0020
B		6.34	2.94	1.93	1.13	0.63	0.30	0.15	0.070	0.040
C		12.57	6.53	4.41	2.73	1.74	0.98	0.57	0.29	0.18
D		22.56	14.73	10.66	7.16	5.11	3.55	2.48	1.52	1.02
A	9.50	1.06	0.32	0.16	0.068	0.046	0.022	0.010	0.0033	0.0014
B		4.54	2.10	1.38	0.81	0.45	0.21	0.11	0.050	0.029
C		8.59	4.47	3.01	1.86	1.19	0.67	0.39	0.20	0.12
D		16.10	10.50	7.60	5.13	3.68	2.58	1.83	1.14	0.78
A	12.50	0.80	0.25	0.12	0.062	0.035	0.017	0.0076	0.0025	0.0011
B		3.45	1.60	1.05	0.61	0.34	0.16	0.083	0.038	0.022
C		6.53	3.39	2.29	1.42	0.90	0.51	0.30	0.15	0.092
D		12.21	7.95	5.76	3.89	2.80	1.97	1.40	0.88	0.61

APPENDIX B

COMPUTATION OF PM 10, PM 5, AND PM 2.5 MASS FRACTIONS AT VARIOUS DOWNWIND DISTANCES FOR SECTION 2.0 PROCEDURE

^{D}STABILITY; 4.30 m/s WINDS; 1000 m

Size range	$\chi/Q(sm^{-1})$	Mass fraction	χ ($\mu g/m^3$)
0 - 2.5μ	4.28	0.021	0.090
2.5 - 5.0μ	4.26	0.073	0.311
5.0 - 10.0μ	3.98	0.176	0.700
10.0 - 15.0μ	3.80	0.148	0.562
15.0 - 20.0μ	3.73	0.115	0.429
20.0 - 30.0μ	3.59	0.467	1.676
			3.768

$$\frac{\Sigma < 2.5\mu}{\text{total}} = \frac{0.090}{3.768} = 0.024$$

$$\frac{\Sigma < 5.0\mu}{\text{total}} = \frac{0.401}{3.768} = 0.106$$

$$\frac{\Sigma < 10.0\mu}{\text{total}} = \frac{1.101}{3.768} = 0.292$$

^{D}STABILITY; 4.30 m/s WINDS; 1500 m

Size range	$\chi/Q(sm^{-1})$	Mass fraction	χ ($\mu g/m^3$)
0 - 2.5μ	2.77	0.021	0.058
2.5 - 5.0μ	2.76	0.073	0.201
5.0 - 10.0μ	2.59	0.176	0.456
10.0 - 15.0μ	2.47	0.148	0.366
15.0 - 20.0μ	2.43	0.115	0.279
20.0 - 30.0μ	2.35	0.467	1.097
			2.457

$$\frac{\Sigma < 2.5\mu}{\text{total}} = 0.024$$

$$\frac{\Sigma < 5.0\mu}{\text{total}} = 0.105$$

$$\frac{\Sigma < 10.0\mu}{\text{total}} = 0.291$$

^{D}STABILITY; 4.30 m/s WINDS; 2000 m

Size range	$\chi/Q(sm^{-1})$	Mass fraction	χ ($\mu g/m^3$)
0 - 2.5μ	2.01	0.021	0.042
2.5 - 5.0μ	2.00	0.073	0.146
5.0 - 10.0μ	1.87	0.176	0.329
10.0 - 15.0μ	1.79	0.148	0.265
15.0 - 20.0μ	1.76	0.115	0.202
20.0 - 30.0μ	1.69	0.467	0.789
			1.773

$$\frac{\Sigma < 2.5\mu}{\text{total}} = 0.024$$

$$\frac{\Sigma < 5.0\mu}{\text{total}} = 0.106$$

$$\frac{\Sigma < 10.0\mu}{\text{total}} = 0.292$$

^{D}STABILITY; 4.30 m/s WINDS; 3000 m

Size range	$\chi/Q(sm^{-1})$	Mass fraction	χ ($\mu g/m^3$)
0 - 2.5μ	1.36	0.021	0.028
2.5 - 5.0μ	1.35	0.073	0.098
5.0 - 10.0μ	1.27	0.176	0.224
10.0 - 15.0μ	1.21	0.148	0.179
15.0 - 20.0μ	1.19	0.115	0.137
20.0 - 30.0μ	1.12	0.467	0.523
			1.190

$$\frac{\Sigma < 2.5\mu}{\text{total}} = 0.024$$

$$\frac{\Sigma < 5.0\mu}{\text{total}} = 0.107$$

$$\frac{\Sigma < 10.0\mu}{\text{total}} = 0.295$$

^{D}STABILITY; 4.30 m/s WINDS; 4500 m

Size range	$\chi/Q(sm^{-1})$	Mass fraction	χ ($\mu g/m^3$)
0 - 2.5μ	0.979	0.021	0.020
2.5 - 5.0μ	0.975	0.073	0.071
5.0 - 10.0μ	0.914	0.176	0.161
10.0 - 15.0μ	0.872	0.148	0.129
15.0 - 20.0μ	0.851	0.115	0.098
20.0 - 30.0μ	0.785	0.467	0.367
			0.846

$\frac{\Sigma < 2.5\mu}{\text{total}} = 0.024$

$\frac{\Sigma < 5.0\mu}{\text{total}} = 0.108$

$\frac{\Sigma < 10.0\mu}{\text{total}} = 0.298$

^{D}STABILITY; 4.30 m/s WINDS; 7000 m

Size range	$\chi/Q(sm^{-1})$	Mass fraction	χ ($\mu g/m^3$)
0 - 2.5μ	0.694	0.021	0.014
2.5 - 5.0μ	0.691	0.073	0.050
5.0 - 10.0μ	0.647	0.176	0.114
10.0 - 15.0μ	0.616	0.148	0.091
15.0 - 20.0μ	0.596	0.115	0.068
20.0 - 30.0μ	0.530	0.467	0.248
			0.586

$\frac{\Sigma < 2.5\mu}{\text{total}} = 0.025$

$\frac{\Sigma < 5.0\mu}{\text{total}} = 0.111$

$\frac{\Sigma < 10.0\mu}{\text{total}} = 0.305$

^{D}STABILITY; 4.30 m/s WINDS; 10,000 m

Size range	$\chi/Q(sm^{-1})$	Mass fraction	χ ($\mu g/m^3$)
0 - 2.5μ	0.497	0.021	0.010
2.5 - 5.0μ	0.495	0.073	0.036
5.0 - 10.0μ	0.463	0.176	0.081
10.0 - 15.0μ	0.440	0.148	0.065
15.0 - 20.0μ	0.421	0.115	0.048
20.0 - 30.0μ	0.359	0.467	0.168
			0.409

$$\frac{\Sigma < 2.5\mu}{\text{total}} = 0.026$$

$$\frac{\Sigma < 5.0\mu}{\text{total}} = 0.114$$

$$\frac{\Sigma < 10.0\mu}{\text{total}} = 0.313$$

^{D}STABILITY; 4.30 m/s WINDS; 15,000 m

Size range	$\chi/Q(sm^{-1})$	Mass fraction	χ ($\mu g/m^3$)
0 - 2.5μ	0.316	0.021	0.007
2.5 - 5.0μ	0.314	0.073	0.023
5.0 - 10.0μ	0.294	0.176	0.052
10.0 - 15.0μ	0.278	0.148	0.041
15.0 - 20.0μ	0.262	0.115	0.030
20.0 - 30.0μ	0.209	0.467	0.098
			0.250

$$\frac{\Sigma < 2.5\mu}{\text{total}} = 0.025$$

$$\frac{\Sigma < 5.0\mu}{\text{total}} = 0.118$$

$$\frac{\Sigma < 10.0\mu}{\text{total}} = 0.324$$

^{D}STABILITY; 4.30 m/s WINDS; 20,000 m

Size range	$\chi/Q(sm^{-1})$	Mass fraction	χ ($\mu g/m^3$)
0 - 2.5μ	0.219	0.021	0.004
2.5 - 5.0μ	0.218	0.073	0.016
5.0 - 10.0μ	0.204	0.176	0.036
10.0 - 15.0μ	0.192	0.148	0.028
15.0 - 20.0μ	0.178	0.115	0.020
20.0 - 30.0μ	0.133	0.467	0.062
			0.167

$$\frac{\Sigma < 2.5\mu}{\text{total}} = 0.027$$

$$\frac{\Sigma < 5.0\mu}{\text{total}} = 0.122$$

$$\frac{\Sigma < 10.0\mu}{\text{total}} = 0.337$$

^{D}STABILITY; 2.50 m/s WINDS; 1000 m

Size range	$\chi/Q(sm^{-1})$	Mass fraction	χ ($\mu g/m^3$)
0 - 2.5μ	7.36	0.021	0.154
2.5 - 5.0μ	7.32	0.073	0.534
5.0 - 10.0μ	6.86	0.176	1.207
10.0 - 15.0μ	6.56	0.148	0.971
15.0 - 20.0μ	6.45	0.115	0.742
20.0 - 30.0μ	6.23	0.467	2.909
			6.518

$$\frac{\Sigma < 2.5\mu}{\text{total}} = 0.024$$

$$\frac{\Sigma < 5.0\mu}{\text{total}} = 0.106$$

$$\frac{\Sigma < 10.0\mu}{\text{total}} = 0.291$$

^{D}STABILITY; 2.50 m/s WINDS; 1500 m

Size range	$\chi/Q(sm^{-1})$	Mass fraction	χ ($\mu g/m^3$)
0 - 2.5μ	4.77	0.021	0.100
2.5 - 5.0μ	4.75	0.073	0.347
5.0 - 10.0μ	4.46	0.176	0.785
10.0 - 15.0μ	4.28	0.148	0.633
15.0 - 20.0μ	4.22	0.115	0.485
20.0 - 30.0μ	4.05	0.467	1.891
			4.242

$$\frac{\Sigma < 2.5\mu}{\text{total}} = 0.024$$

$$\frac{\Sigma < 5.0\mu}{\text{total}} = 0.105$$

$$\frac{\Sigma < 10.0\mu}{\text{total}} = 0.290$$

^{D}STABILITY; 2.50 m/s WINDS; 2000 m

Size range	$\chi/Q(sm^{-1})$	Mass fraction	χ ($\mu g/m^3$)
0 - 2.5μ	3.45	0.021	0.072
2.5 - 5.0μ	3.44	0.073	0.251
5.0 - 10.0μ	3.23	0.176	0.568
10.0 - 15.0μ	3.10	0.148	0.459
15.0 - 20.0μ	3.05	0.115	0.351
20.0 - 30.0μ	2.87	0.467	1.340
			3.042

$$\frac{\Sigma < 2.5\mu}{\text{total}} = 0.024$$

$$\frac{\Sigma < 5.0\mu}{\text{total}} = 0.106$$

$$\frac{\Sigma < 10.0\mu}{\text{total}} = 0.293$$

^{D}STABILITY; 2.50 m/s WINDS; 3000 m

Size range	$\chi/Q(sm^{-1})$	Mass fraction	χ ($\mu g/m^3$)
0 - 2.5μ	2.33	0.021	0.049
2.5 - 5.0μ	2.33	0.073	0.170
5.0 - 10.0μ	2.18	0.176	0.384
10.0 - 15.0μ	2.09	0.148	0.309
15.0 - 20.0μ	2.03	0.115	0.233
20.0 - 30.0μ	1.83	0.467	0.855
			2.000

$$\frac{\Sigma < 2.5\mu}{\text{total}} = 0.024$$

$$\frac{\Sigma < 5.0\mu}{\text{total}} = 0.110$$

$$\frac{\Sigma < 10.0\mu}{\text{total}} = 0.301$$

^{D}STABILITY; 2.50 m/s WINDS; 4500 m

Size range	$\chi/Q(sm^{-1})$	Mass fraction	χ ($\mu g/m^3$)
0 - 2.5μ	1.68	0.021	0.035
2.5 - 5.0μ	1.68	0.073	0.123
5.0 - 10.0μ	1.57	0.176	0.276
10.0 - 15.0μ	1.50	0.148	0.222
15.0 - 20.0μ	1.44	0.115	0.166
20.0 - 30.0μ	1.21	0.467	0.565
			1.387

$$\frac{\Sigma < 2.5\mu}{\text{total}} = 0.025$$

$$\frac{\Sigma < 5.0\mu}{\text{total}} = 0.114$$

$$\frac{\Sigma < 10.0\mu}{\text{total}} = 0.313$$

^{D}STABILITY; 2.50 m/s WINDS; 7000 m

Size range	$\chi/Q(sm^{-1})$	Mass fraction	χ ($\mu g/m^3$)
0 - 2.5μ	1.19	0.021	0.025
2.5 - 5.0μ	1.19	0.073	0.087
5.0 - 10.0μ	1.11	0.176	0.195
10.0 - 15.0μ	1.05	0.148	0.155
15.0 - 20.0μ	0.98	0.115	0.113
20.0 - 30.0μ	0.74	0.467	0.346
			0.921

$$\frac{\Sigma < 2.5\mu}{\text{total}} = 0.027$$

$$\frac{\Sigma < 5.0\mu}{\text{total}} = 0.121$$

$$\frac{\Sigma < 10.0\mu}{\text{total}} = 0.334$$

^{D}STABILITY; 2.50 m/s WINDS; 10,000 m

Size range	$\chi/Q(sm^{-1})$	Mass fraction	χ ($\mu g/m^3$)
0 - 2.5μ	0.85	0.021	0.018
2.5 - 5.0μ	0.85	0.073	0.062
5.0 - 10.0μ	0.80	0.176	0.141
10.0 - 15.0μ	0.75	0.148	0.111
15.0 - 20.0μ	0.68	0.115	0.078
20.0 - 30.0μ	0.45	0.467	0.210
			0.620

$$\frac{\Sigma < 2.5\mu}{\text{total}} = 0.029$$

$$\frac{\Sigma < 5.0\mu}{\text{total}} = 0.129$$

$$\frac{\Sigma < 10.0\mu}{\text{total}} = 0.356$$

^{D}STABILITY; 2.50 m/s WINDS; 15,000 m

Size range	$\chi/Q(sm^{-1})$	Mass fraction	χ ($\mu g/m^3$)
0 - 2.5μ	0.54	0.021	0.011
2.5 - 5.0μ	0.54	0.073	0.039
5.0 - 10.0μ	0.51	0.176	0.090
10.0 - 15.0μ	0.47	0.148	0.070
15.0 - 20.0μ	0.40	0.115	0.046
20.0 - 30.0μ	0.22	0.467	0.103
			0.359

$$\frac{\Sigma < 2.5\mu}{\text{total}} = 0.032$$

$$\frac{\Sigma < 5.0\mu}{\text{total}} = 0.141$$

$$\frac{\Sigma < 10.0\mu}{\text{total}} = 0.392$$

^{D}STABILITY; 2.50 m/s WINDS; 20,000 m

Size range	$\chi/Q(sm^{-1})$	Mass fraction	χ ($\mu g/m^3$)
0 - 2.5μ	0.38	0.021	0.008
2.5 - 5.0μ	0.38	0.073	0.028
5.0 - 10.0μ	0.35	0.176	0.062
10.0 - 15.0μ	0.32	0.148	0.047
15.0 - 20.0μ	0.26	0.115	0.030
20.0 - 30.0μ	0.12	0.467	0.056
			0.231

$$\frac{\Sigma < 2.5\mu}{\text{total}} = 0.034$$

$$\frac{\Sigma < 5.0\mu}{\text{total}} = 0.155$$

$$\frac{\Sigma < 10.0\mu}{\text{total}} = 0.422$$

APPENDIX C

ICS MODEL APPLICATION TO THREE MINE SCENARIOS

MODEL FEATURES

The ISC model programs (ISCST and ISCLT) accept the following source types: point, area, and volume. The line sources are simulated by multiple volume sources. The transport of particulate emissions from stacks (point sources) are determined using the steady-state Gaussian plume equation for a continuous elevated source. The area and volume source options are used to simulate the impact of particulate emissions from a variety of surface coal mining operations, such as reclaimed land and striped overburden (area sources) and coal and overburden haul roads (volume sources). The area source model is based on the equation for a continuous and finite cross-wind line source. Since each area source must be square, the effects of an irregularly-shaped area source can be simulated by a series of multiple squares approximating the source's actual geometry. In general, no plume rise exists with area sources; consequently, the effective emission height is equivalent to the physical height of the source of particulate emissions, which for many surface mine sources will be groundlevel.

The steady-state Gaussian plume equation for a continuous source is also used to calculate groundlevel particulate concentrations contributed by volume source emissions. A coal or overburden haul road (line source) is represented by a series of multiple volume sources. To represent a line source exactly, the line source is divided into N volume sources, where N is determined by the length of the line source divided by its width. Because this exact procedure is not always practical, a haul road is often simulated by an approximate representation in which a lesser number of equally spaced volume sources is used. In spacing a smaller number of volume sources at equal intervals, an approximate representation of the line source is achieved. The initial lateral dispersion coefficient, σ_{yo}, is set equal to the distance between adjacent volume sources divided by 2.15 so that the road is simulated by a series of overlapping Gaussian distributions resulting from each discrete volume source. As with area sources, generally no plume rise occurs from volume sources.

Receptor Grid

Selection of a Cartesian or a polar receptor grid system allows the user to design the ISC model output for the specific application. Since a surface coal mine approximates a combination of multiple sources, not located at the same point, the

Cartesian coordinate system is usually used to model mines. Model receptors are generally placed outside what would normally comprise the mine permit boundary for two reasons: first, most state and federal regulations do not require that ambient air standards be met inside plant property, and second, the ISC model itself ignores the source contribution induced by sources within 100 meters of the nearest receptor.

Settling and Deposition

The effects of gravitational settling and dry deposition on small particulates which tend to remain suspended in the atmosphere for long distances is ignored by the ISC model. The larger particulates, however, are brought to the ground surface by a combination of gravitational settling and deposition. Additionally, small particulates are generally reflected from the ground surface, whereas the large particulates that come in contact with the surface are usually completely or partially retained at the surface. The ISC model includes the effects of both dry deposition and gravitational settling. The Dumbauld dry deposition model, used in the ISC dispersion model, assumes that a user specified fraction of the material that comes into contact with the ground surface is reflected from the surface back into the atmosphere. The reflection coefficient is a function of the gravitational settling velocity. Gravitational settling of large particulates result in a tilted plume with the plume axis inclined to the horizontal.

The particulate emissions from each modeled source are subdivided into contiguous particle size categories so that the full spectrum of particle sizes is represented by discrete categories. For each category, the mass fraction of particulates, the particle reflection coefficient, and the gravitational settling velocity for the size range within the category are specified.

The emission rates of particulate matter from each of the three mine scenarios--Powder River Basin, San Juan Basin, and Green River/Hams Fork Basin--have been computed in Subsection 4.2 of this report. The first step in modeling these mines was to collect or combine emission rates of coincident particulate producing activities. Haul roads, pit activities, and coal handling facility sources were grouped together for subsequent simulation as volume or area sources. This source collection and apportionment is summarized in Tables C-1 through C-6, which illustrate annual average emission rates and worst-case 24-hour emission rates for each of the three mines.

In all cases, haul roads and access roads were simulated as spaced volume sources, emitting at groundlevel. Coal handling facilities and mine pits were idealized as groundlevel area sources. Details of source characteristics are summarized in

Table C-7. As shown in Table C-7, the representation of a mine during an annual time period and during a worst-case 24-hour period sometimes differ. In a year's time, activities associated with the mine pit cover a larger spatial area than they do during a 24-hour period. At the San Juan Basin hypothetical mine, for example, the pit can be idealized as five area sources, while in a 24-hour time period, activity may only take place in a spatial area represented by two area sources. All computations of σ_{yo} and σ_{zo} in Table C-7 are in keeping with standard modeling practice.

A very important input to the ISC model are the particle deposition parameters, summarized in Table C-8. Each of the settling velocities and reflection coefficients was computed using methods recommended in the ISC Dispersion Model User's Guide. The distribution of mass within each particle size range for each of the three mines was discussed previously in Subsection 4.2 of this report.

TABLE C-1. PARTICLE DEPOSITION PARAMETERS

Particle diameter, microns	Settling velocity m/s	Reflection coefficient
0-2.5	0.000093	1.0
2.5-5.0	0.000837	0.99
5.0-10.0	0.003347	0.86
10.0-15.0	0.018223	0.73
20.0-30.0	0.037189	0.65

TABLE C-2. APPORTIONMENT OF EMISSIONS, POWDER RIVER BASIN MINE: ANNUAL

Source group	TSP emissions tons/year
Mine pit	
Topsoil removal	9.7
Scraper travel	76.3
Topsoil dump	3.2
Overburden drilling	2.9
Overburden blasting	1.2
Overburden removal	693.8
Dozers - coal	14.2
Coal drilling	1.0
Coal blasting	2.1
Coal loading	240.9
Wind erosion	117.8
Overburden replacement	391.5
Dozers - overburden	43.7
	1598.3
Haul roads	
Haul trucks - coal	3952.2
Lt.- and med.-duty vehicles	664.1
Graders	3.4
Access road	1.5
Haul trucks - overburden	1217.4
	5838.6
Facilities	
Coal dump	450.0
Crushing, screening, conveying	65.7
Coal loadout	350.0
	865.7

TABLE C-3. APPORTIONMENT OF EMISSIONS, POWDER RIVER BASIN MINE: 24-HOUR

Source group	TSP emissions pound/hour
Mine pit	
Topsoil removal	2.79
Scraper travel	21.93
Topsoil dump	0.92
Overburden drilling	0.83
Overburden blasting	0.64
Overburden removal	199.37
Dozers - coal	4.18
Coal drilling	0.29
Coal blasting	1.68
Coal loading	69.22
Wind erosion	35.95
Overburden replacement	112.50
Dozers - overburden	12.60
	462.90
Haul roads	
Haul trucks - coal	1135.69
Lt.- and med.-duty vehicles	190.80
Graders	0.98
Access road	0.81
Haul trucks - overburden	349.80
	1678.08
Facilities	
Coal dump	129.31
Crushing, screening, conveying	18.88
Coal loadout	100.57
	248.76

TABLE C-4. APPORTIONMENT OF EMISSIONS, SAN JUAN BASIN MINE: ANNUAL

Source group	TSP emissions tons/year
Mine pit	
Topsoil removal	38.5
Scraper travel	117.0
Topsoil dump	13.3
Overburden drilling	7.7
Overburden blasting	8.8
Overburden removal	1293.0
Dozers - coal	280.2
Coal drilling	6.6
Coal blasting	46.3
Coal loading	173.6
Wind erosion	1063.0
Dozers - overburden	234.2
	3282.2
Haul roads	
Haul trucks - coal	2463.0
Lt.- and med.-duty vehicles	386.1
Graders	176.7
Access road	12.0
	3037.8
Facilities	
Coal dump	117.0
Crushing, screening, conveying	12.4
Coal storage	109.4
Coal loadout	-
	238.8

TABLE C-5. APPORTIONMENT OF EMISSIONS, SAN JUAN BASIN MINE: 24-HOUR

Source group	TSP emissions pound/hour
Mine pit	
Topsoil removal	11.06
Scraper travel	33.62
Topsoil dump	3.82
Overburden drilling	3.10
Overburden blasting	4.51
Overburden removal	371.55
Dozers - coal	80.52
Coal drilling	1.90
Coal blasting	23.15
Coal loading	49.88
Wind erosion	310.82
Dozers - overburden	67.30
	961.23
Haul roads	
Haul trucks - coal	707.76
Lt.- and med.-duty vehicles	110.95
Graders	50.78
Access road	3.45
	872.94
Facilities	
Coal dump	33.62
Crushing, screening, conveying	3.56
Coal storage	31.44
	68.62

TABLE C-6. APPORTIONMENT OF EMISSIONS, GREEN RIVER/HAMS FORK MINE: ANNUAL

Source group	TSP emissions tons/year
Mine pit	
Topsoil removal	6.5
Scraper travel	45.9
Topsoil dump	2.2
Overburden drilling	1.5
Overburden blasting	0.6
Overburden removal	365.0
Dozers - coal	73.4
Coal drilling	0.5
Coal blasting	4.6
Coal loading	82.2
Wind erosion	62.7
Dozers - overburden	12.9
	658.0
Haul roads	
Haul trucks - coal	462.6
Lt.- and med.-duty vehicles	30.9
Graders	0.9
	494.4
Mine facilities	
Coal dump	63.9
Crushing, screening, conveying	6.7
Coal storage	12.7
Coal loadout	49.7
	133.0
Access road	
Access road	0.9
	0.9

TABLE C-7. APPORTIONMENT OF EMISSIONS, GREEN RIVER/HAMS FORK BASIN MINE: 24-HOUR

Source group	TSP emissions pound/hour
Mine pit	
Topsoil removal	1.87
Scraper travel	13.19
Topsoil dump	0.63
Overburden drilling	0.43
Overburden blasting	0.42
Overburden removal	104.88
Dozers - coal	21.09
Coal drilling	0.14
Coal blasting	2.99
Coal loading	23.62
Wind erosion	19.00
Dozers - overburden	3.71
	191.97
Haul roads	
Haul trucks - coal	132.93
Lt.- and med.-duty vehicles	8.88
Graders	0.27
	142.08
Mine facilities	
Coal dump	18.36
Crushing, screening, conveying	1.93
Coal storage	3.85
Coal loadout	14.28
	38.42
Access road	
Access road	0.24
	0.24

TABLE C-8. SOURCE CHARACTERISTICS

Mine scenario	Time interval	Activity	Source representation	No. of sources	Width, m	σ_{yo}, m	σ_{zo}, m
Powder River Basin	Annual	Pit	Area	3	500		
		haul road	Volume	20		93.02	2.33
		facilities	Area	1	200		
Powder River Basin	24-hour	Pit	Area	1	500		
		haul road	Volume	20		93.02	2.33
		facilities	Area	1	200		
San Juan Basin	Annual	Pit	Area	5	1000		
		haul road	Volume	11		465.12	2.33
		facilities	Area	1	250		
San Juan Basin	24-hour	Pit	Area	2	1000		
		haul road	Volume	9		465.12	2.33
		facilities	Area	1	250		
Green River/Hams Fork Basin	Annual	Pit	Area	4	500		
		haul road	Volume	12		93.02	2.33
		access road	Volume	4		93.02	2.33
		facilities	Area	1	300		
Green River/Hams Fork Basin	24-hour	Pit	Area	2	500		
		haul road	Volume	12		93.02	2.33
		access road	Volume	4		93.02	2.33
		facilities	Area	1	300		

TABLE C-9. 24-HOUR METEOROLOGICAL INPUT

Hour	Powder River Basin wind direction, degrees	San Juan Basin wind direction, degrees	Green River/Hams Fork Basin wind direction, degrees	Wind speed, m/s	Stability
1	100	37	50	5.0	E
2	86	30	53	4.0	E
3	87	32	45	2.5	E
4	83	37	44	4.0	E
5	83	23	38	2.0	E
6	86	26	49	6.0	E
7	101	28	54	5.5	D
8	82	31	48	4.5	C
9	91	34	50	5.5	C
10	100	37	50	5.5	C
11	97	21	52	5.0	C
12	89	41	43	8.0	D
13	87	29	37	9.0	D
14	90	19	51	9.0	D
15	80	36	44	9.0	D
16	87	40	40	5.0	D
17	83	34	51	6.0	D
18	87	32	45	5.0	E
19	97	34	53	6.0	D
20	87	34	52	8.0	D
21	81	41	53	8.0	D
22	87	21	44	7.0	D
23	83	23	45	8.0	D
24	[illegible]	[illegible]	[illegible]	[illegible]	E

TECHNICAL REPORT DATA
(Please read Instructions on the reverse before completing)

1. REPORT NO. EPA 450/4-83-004	2.	3. RECIPIENT'S ACCESSION NO.
4. TITLE AND SUBTITLE Characterization Of PM_{10} And TSP Air Quality Around Western Surface Coal Mines		5. REPORT DATE August 1982
		6. PERFORMING ORGANIZATION CODE
7. AUTHOR(S)		8. PERFORMING ORGANIZATION REPORT NO.
9. PERFORMING ORGANIZATION NAME AND ADDRESS Pedco Environmental, Incorporated Kansas City, Missouri 64108 and TRC Environmental Consultants Englewood, Colorado 80111		10. PROGRAM ELEMENT NO.
		11. CONTRACT/GRANT NO. 68-02-3512
12. SPONSORING AGENCY NAME AND ADDRESS Monitoring And Data Analysis Division Office Of Air Quality Planning And Standards Office Of Air, Noise And Radiation U.S. Environmental Protection Agency		13. TYPE OF REPORT AND PERIOD COVERED
		14. SPONSORING AGENCY CODE

15. SUPPLEMENTARY NOTES

EPA Project Officer: Thompson G. Pace

16. ABSTRACT

This document is directed to those managers and technical staff of coal industry and air pollution regulatory agencies needing information on the general impact of surface mines on ambient particulate matter concentrations. The document addresses both PM_{10}, which is a measure of particles generally smaller than 10 μm by a sampler with a 50% efficiency at 10 μm, and Total Suspended Particulate (TSP), as measured by a high volume sampler. Estimates of PM_{10} and TSP concentrations are developed from actual measurements, from previous dispersion modeling and from modeling three scenarios representing a range of mine sizes and configurations. The results are compared to the Prevention of Significant Deterioration (PSD) regulations and the National Ambient Air Quality Standards (NAAQS). Both maximum controls and typical controls are considered, and distances from mine boundaries where PSD and/or NAAQS are exceeded are discussed.

17. KEY WORDS AND DOCUMENT ANALYSIS

a. DESCRIPTORS	b. IDENTIFIERS/OPEN ENDED TERMS	c. COSATI Field/Group
Air Quality Maintenance Coal Mining Particulate - Size Control Strategies		

18. DISTRIBUTION STATEMENT Unlimited	19. SECURITY CLASS *(This Report)*	21. NO. OF PAGES 170
	20. SECURITY CLASS *(This page)*	22. PRICE

EPA Form 2220-1 (Rev. 4-77) PREVIOUS EDITION IS OBSOLETE