903R88108

United States Environmental Protection Agency
CBP/TRS 17/88

October 1988

Assessment of Cost and Effectiveness of Biological Dual Nutrient Removal Technologies in the Chesapeake Bay Drainage Basin Volume II

U.S. Environmental Protection Agency
Region III Information Resource
Center (3PM52)
841 Chestnut Street
Philadelphia, PA 19107

TD
225
.C54
M191
Vol. 2

Chesapeake Bay Program

U.S. Environmental Protection Agency
Region III Information Resource
Center (3PM52)
841 Chestnut Street
Philadelphia, PA 19107

ASSESSMENT OF COST AND EFFECTIVENESS OF BIOLOGICAL DUAL NUTRIENT REMOVAL TECHNOLOGIES IN THE CHESAPEAKE BAY DRAINAGE BASIN

VOLUME II

PREPARED BY

HAZEN AND SAWYER ENGINEERS, P.C.
730 BROADWAY
NEW YORK, NEW YORK 10003

AND

J. M. SMITH AND ASSOCIATES, PSC.
CONSULTING ENGINEERS
7373 BEECHMONT AVENUE
CINCINNATI, OHIO 45230

CONTRACT NO. 68-03-4049

PREPARED FOR

UNITED STATES ENVIRONMENTAL PROTECTION AGENCY
PERFORMANCE ASSURANCE BRANCH
MUNICIPAL FACILITIES DIVISION
WASHINGTON, D.C. 20460

TABLE OF CONTENTS

TITLE	APPENDIX
INTRODUCTION	
ARLINGTON WPCP, VIRGINIA	D-1
HOPEWELL WPCP, VIRGINIA	D-2
LOWER POTOMAC WPCP, FAIRFAX, VIRGINIA	D-3
PATAPSCO WWTP, BALTIMORE, MARYLAND	D-4
ALEXANDRIA WPCP, VIRGINIA	D-5
RICHMOND WWTP, VIRGINIA	D-6
BACK RIVER WWTP, MARYLAND	D-7
BLUE PLAINS WWTP, WASHINGTON, D.C.	D-8

Introduction

The purpose of this report entitled "Assessment of the Cost and Effectiveness of Biological Dual Nutrient Removal Technologies in the Chesapeake Bay Drainage Basin, Volume II" is to present the cost of retrofitting BNR processes to eight of the largest plants in the Chesapeake Bay Drainage Basin. The plants selected for this report along with their design flows are listed below:

Plant Name and Location	Design Flow (mgd)	Contact Person
Arlington WWTP, VA	30	Mr. Alan Cassell
Hopewell WWTP, VA	50	Mr. Mark Haley
LPPCP, Fairfax, MD	54	Mr. Alan Hogge
Patapsco WWTP, Baltimore, MD	70	Mr. Jerry Slattery
Alexandria WWTP, VA	56	Mr. Glenn Harvey
Richmond WWTP, VA	70	Mr. Ben Gregory
Back River WWTP, Baltimore, MD	207	Mr. Jerry Slattery
Blue Plains WWTP, Washington, DC	309	Mr. Russ Thomas

The two levels of treatment and the corresponding BNR technologies used for estimating costs of retrofitting these plants are the same as described in Volume I of this report. The methodology adopted for this report was to use site specific data and existing facilities for the evaluation of each of these plants. The plant specific data and details of the existing facilities were obtained from the following sources:

- Review of available facility plans.
- Preliminary and final design reports.
- Existing as-built plans.
- Existing and proposed permits.
- Plant performance data.
- Interviews with plant officials/staff.

All of the cost estimates presented in this report are based on the design flows of the plants at two levels of nutrient removal, i.e., HLND (TN - 8 mg/l; TP = 2 mg/l) and LLND (TN = 3 mg/l; TP = 0.5 mg/l). These nutrient target levels have no relationship to the existing or future NPDES permit requirements.

Comparison of the planning level cost estimates presented herein to those generated by much more detailed analysis must be made with extreme caution. Large variations in cost may be attributed to the following:

- levels of TP and TN removal to be achieved on a long-term average basis.
- level of reliability expected
- short or long-term plans for disposal of residuals.

Almost all of the plants evaluated were in various stages of facility planning, design or construction for upgrading effluent quality, expansion of capacity or both. For some plants, cost estimates have been prepared for chosen alternatives based on detailed facility plans and/or final design reports. Much of this effort is being accomplished under sponsorship of the U.S.E.P.A. Construction Grant Program.

APPENDIX D-1

ARLINGTON WATER POLLUTION CONTROL PLANT

TABLE OF CONTENTS

SECTION	PAGE
1.0 Description of Existing Facilities	1
2.0 Proposed Plant Modifications	8
3.0 Proposed Retrofiting for Biological Nutrient Removal	8
4.0 Total Cost Summary	14

APPENDIX D-1

ARLINGTON WATER POLLUTION CONTROL PLANT

1.0 DESCRIPTION OF EXISTING FACILITIES:

The Arlington, Virginia Water Pollution Control Plant serves as a major domestic waste treatment facility. The wastewater treatment facilities consist of prechlorination, grit and screening removal, primary clarification, aeration, secondary clarification, chemical addition, tertiary clarification, multi-media gravity filtration, reaeration, and post chlorination.

Sludge from the primary clarifier, flotation thickener, and the secondary clarifiers is dewatered by the filter press and then incinerated. The ash is disposed of in a sanitary landfill.

Figure D.1.1 is a schematic of the existing plant showing the wet unit processes and the sludge treatment and handling facilities. Figure D.1.2 is a layout of the Arlington plant site. As can be seen the present treatment plant is confined on all four sides. Land area for expansion and/or modification is very limited. The flow diagrams for the proposed retrofitting for HLND and LLND are indicated in figures D.1.3 and D.1.4.

Present design flow and wastewater characteristics:

The present design flow is 30 MGD. The average flow monitored in FY 85 and FY 86 was 26 MGD.

From Table D.1.1 it can be seen that the treatment plant performance is excellent in meeting the effluent limits for BOD, TSS and Phosphorus. The plant presently does not have any nitrogen limitations but has a 0.18 mg/l monthly average limit for total phosphorus.

Although the plant has had considerable problems in operating the gravity filters for the past two years, the treatment plant officials decided to use the gravity filters because of the availability of spare parts, not being used used by the Fairfax County treatment plant.

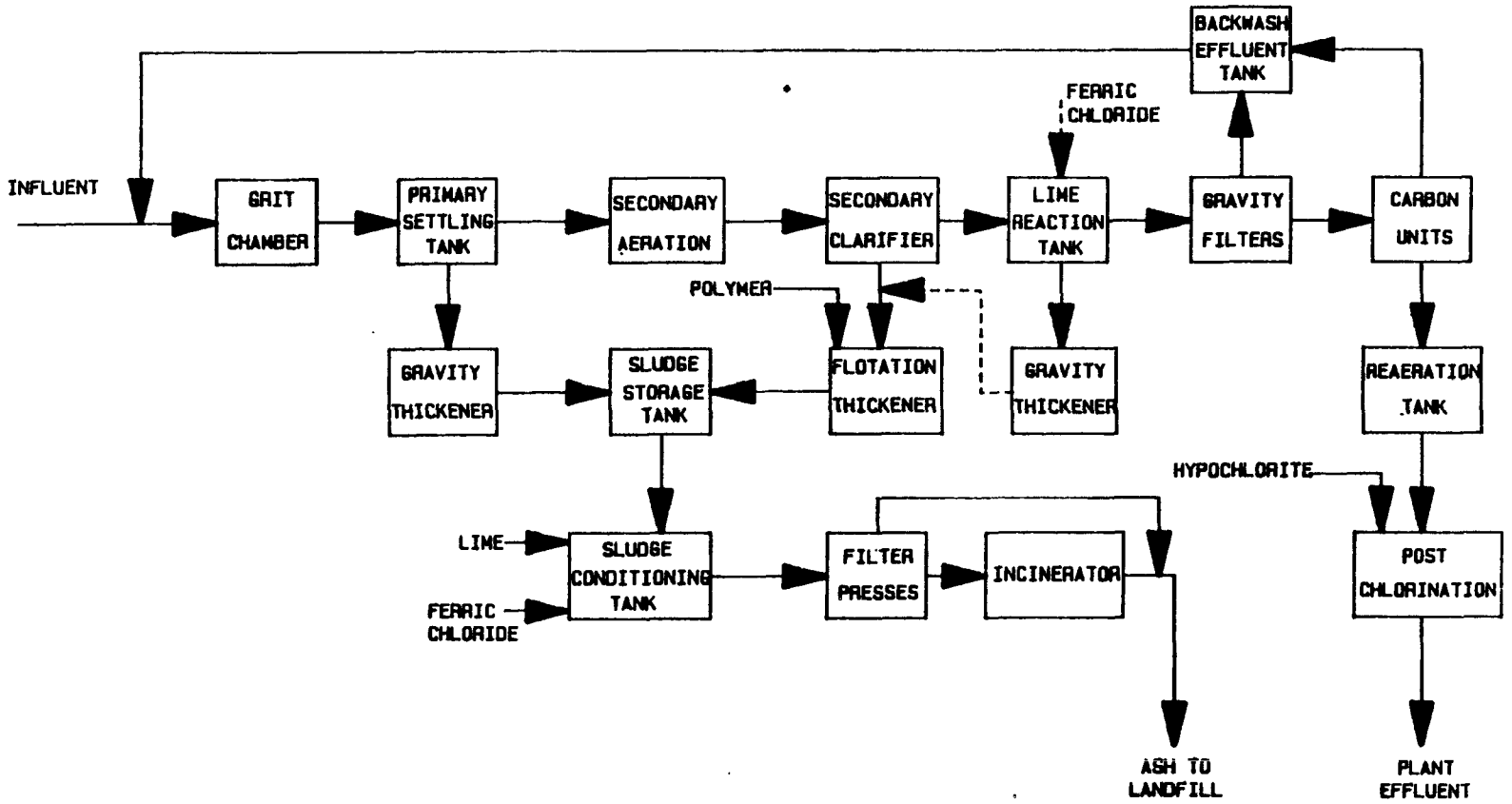

FIGURE D.1.1 EXISTING FLOW DIAGRAM
ARLINGTON COUNTY AWT PLANT

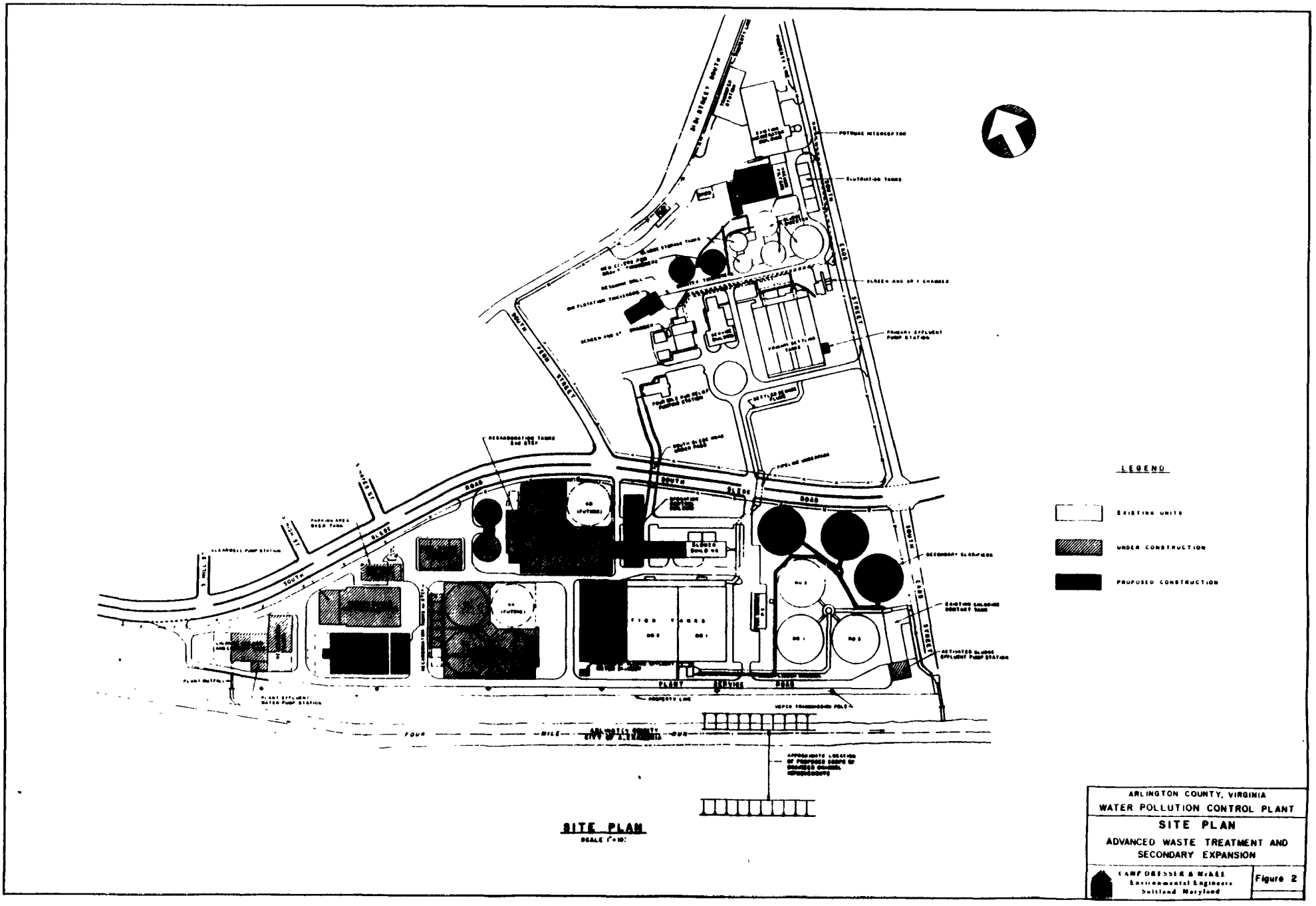
LEGEND
EXISTING UNITS
UNDER CONSTRUCTION
PROPOSED CONSTRUCTION
SITE PLAN
ARLINGTON COUNTY, VIRGINIA
WATER POLLUTION CONTROL PLANT
SITE PLAN
ADVANCED WASTE TREATMENT AND SECONDARY EXPANSION
CAMP DRESSER & McKEE
Environmental Engineers
Suitland Maryland
Figure 2

Figure D.1.2

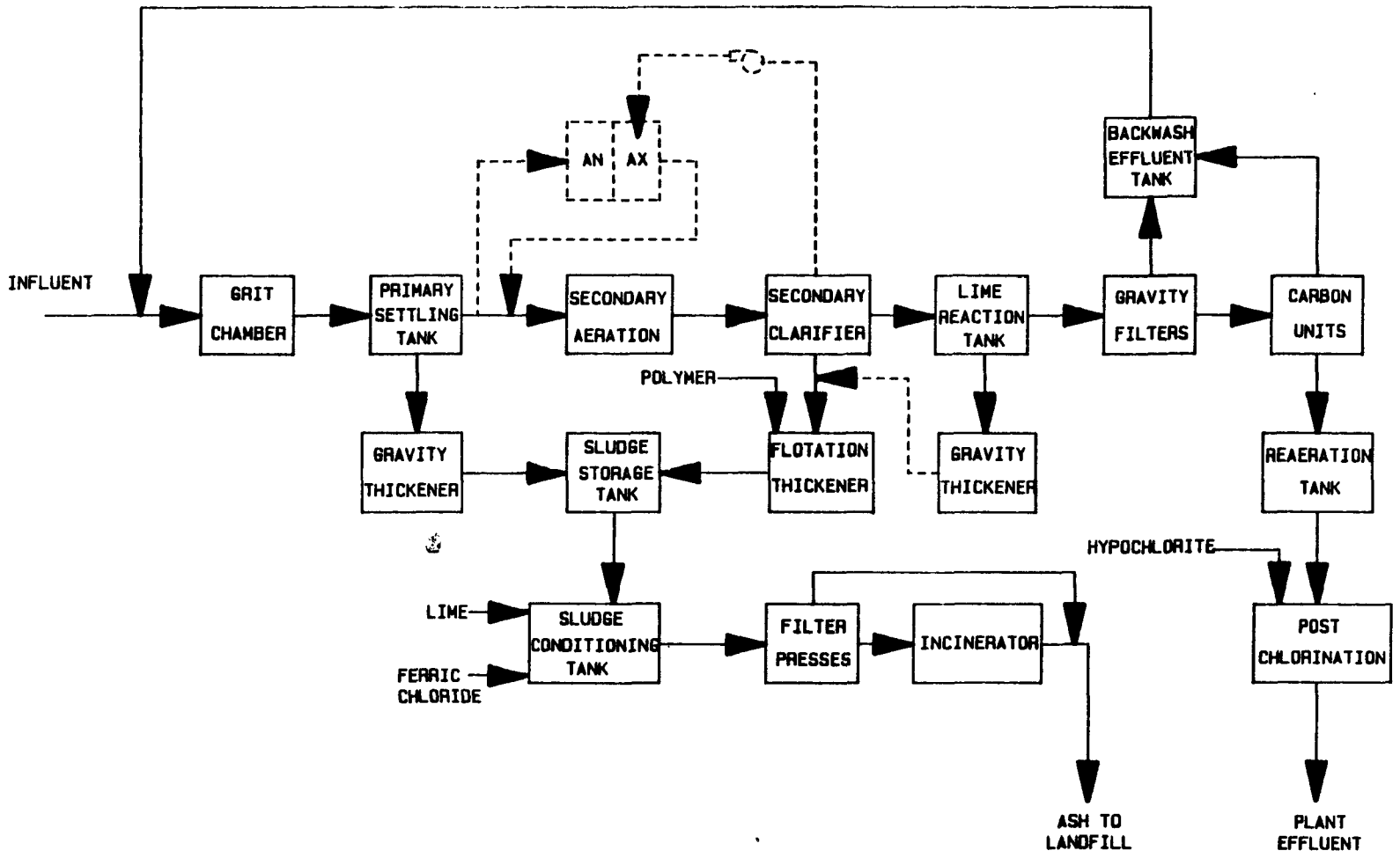

FIGURE D.1.3 PROPOSED FLOW DIAGRAM
ARLINGTON COUNTY AWT PLANT (HLND)

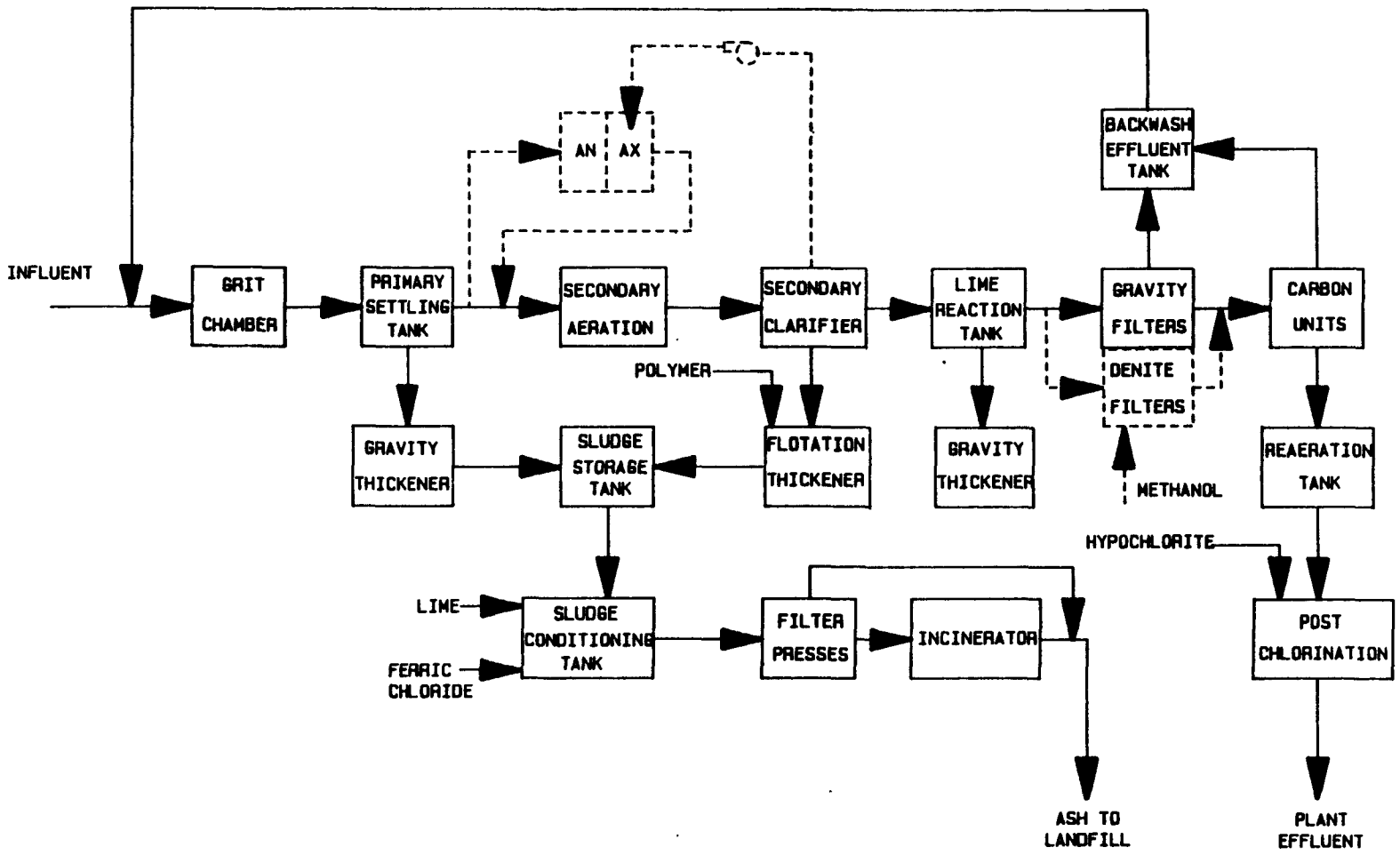

FIGURE D.1.4 PROPOSED FLOW DIAGRAM
ARLINGTON COUNTY AWT PLANT (LLND)

TABLE D.1.1

ARLINGTON WWTP RAW SEWAGE AND EFFLUENT CHARACTERISTICS

Parameter	Influent, mg/l	Effluent, mg/l	% Removal	NPDES Permit
BOD_5, mg/l	156	6	96	10
TSS, mg/l	197	6	97	10
TKN, mg/l	38	10	—	N/A
NH_3, mg/l	18	8	56	N/A
Phosphorus, mg/l	10	0.18	90	0.18
Fecal Coliform No/1000 ml		200	—	200
pH	7.5	7.3	—	6-9

Existing plant components and sizes:

Primary Treatment:

Primary settling tanks (4), each 188' L x 32' W x 9.6' D, overflow rate of 2500 gpd/sq. ft (peak).
Sludge collectors (4), 1 HP; 1,720 rpm; 220/440 volts.
Sludge pumping equipment (2), 200 gpm; centrifugal, open impeller; 15 HP; 1,060 rpm, 220/440 volts.

Secondary Treatment:

Aeration basins (3), 4 passes each 189' L x 30' W x 15' D. Net volume 1,002,000 cu.ft.; total blower capacity of 79,500 cfm.

Secondary clarifiers (6) each 115' Dia x 11' SWD; Total surface area 62,200 sq. ft.; peak overflow rate of 1,095 gpd/sq.ft.

Return activated sludge pumps; two pumps with a design capacity of 4200 gpm/19 ft TDH and two pumps rated at 10,000 gpm/23 ft TDH. Waste activated sludge pumps (3); design capacity 1400 gpm/34 ft TDH.

Gravity thickeners (2); design capacity 65' Dia. x 10' SWD; thickened sludge pumps (2), 600 gpm capacity.
Lime reaction tanks (6), 120' L x 120' W x 35' D.

Ferric chloride/alum feed system:

Storage tank (2), 8.8' Dia. x 30.6' L, capacity 9520 gals each; 4 feed pumps at 3.8 gpm. Polymer feed system (lime reaction tank and gravity filters) (1) at 750 lb/day and; primary feed tank (2) 5' Dia. x 4.5' H, capacity of 1,000 gals.

Tertiary Treatment:

Gravity Filters: Numbers of filters (8), peak flow 67.5 gpm; area/filter 900 sq.ft.; dual bed; multi-media gravity flow.

Filter water clear well: Number of units (1); Total capacity 450,000 gals; 94' L, 46' W, 17' D.

Reaeration Tanks:

Mechanical surface aerators (2); 46' L x 46' W x 20' SWD, Total volume of 84, 640 cu.ft.; capacity 170 lb O_2/hr at zero D.O.; size 50 HP/1770 rpm.

Chlorine contact tanks: multipass (2), 45' L x 62' W x 15.9 SWD; Total volume of 84,000 cu.ft.

Hypochlorite storage tank: Eight (8), Sodium hypochlorite; capacity of 18,000 gals.

2.0 PROPOSED PLANT MODIFICATIONS:

The plant's current capacity is 30 MGD. The plant is to be expanded to 40 MGD by the year 1995. CDM has been awarded a contract to design facilities to feed ferric chloride to the secondary system. This was done in compliance with the new consent decree which requires more stringent effluent limits for Phosphorus.

A study for odor problems at the plant was completed by James Montgomery Engineers. The County is ready to spend $1,000,000 to provide plant corrosion prevention.

The State Water Control Board issued a new NPDES permit in June, 1986 which requires toxicity monitoring.

3.0 PROPOSED RETROFITTING FOR BIOLOGICAL NUTRIENT REMOVAL

The modification to retrofit the existing treatment plant for HLND and LLND limits would require the addition of the Anaerobic and Anoxic Zones prior to the Aeration zone. The plant currently uses tertiary filters and thus the modification of the plant for A_2O process would require the additional secondary clarifiers to get an overall overflow rate of 600 gpd/sq ft. The land availability at the treatment plant is very limited for any expansion and/or modification. Thus the LLND requirements which requires a five (5) stage Bardenpho Process is not feasible. Alternatively, to meet the LLND targets, the cost is presented by using a three (3) stage A_2O process (HLND) followed by reactor clarification with alum addition and deep bed denitrification filters.

The cost associated to meet both the levels of treatment are presented as follows:

HIGH LEVEL NUTRIENT DISCHARGE (TP = 2 mg/l; TN = 8 mg/l)

INCREMENTAL CONSTRUCTION COST

TANKAGE REQUIREMENT SUMMARY FOR HLND RETROFIT

	Tankage Required 1000 cu.ft.	Req'mts Met by Exist. Tk 1000 cu.ft.	Addl'n Tkg. Reqd.	Surf. Area Reqd. sq. ft.	Land Area Available sq. ft.
Anaerobic(1Hr.)	223	0	223	14400	
Anoxic(1Hr.)	223	0	223	14400	
Aerobic(6Hr.)	1337	1020	317	21000	
Total	1783	1020	763	49800	114000

TANKAGE REQUIREMENTS:(16" WALL, 14" BASE SLAB AND 8" BAFFLES)

	Anaerobic Tankage	Anoxic Tankage	Aerobic Tankage
No. of Tanks	1	1	1
No. of passes/tank	4	4	4
Length per pass (ft)	150	150	150
Width per pass (ft)	24	24	35
Depth per pass (ft)	16	16	16
Total volume (cu.ft.)	230400	230400	336000
No. of baffles/tank	3	3	3

MIXER REQUIREMENTS:

	Anaerobic Tankage	Anoxic Tankage
Volume of tanks (MG)	1.72	1.72
H.P. required (@ 50 HP/MG)	86	86
No. of Mixers (10 HP/mixer)	9	9
No. of standby mixers	2	2
Total no. of mixers	11	11
No. of mixers existing	0	0
No. of mixers required	11	11

AERATION REQUIREMENTS (Appendix C-8)

Plant design flowrate (MG)	40.00
Plant Influent BOD (mg/l)	156.00
Aeration Influent BOD (mg/l)	104.00
Plant Effluent BOD (mg/l)	6.00
BOD loading (mg/l)	98
Ammonia loading (mg/l)	18
Oxygen required (lbs/MG)	1590
Air required (SCFM)	42662
Air required (SCFM) (@ peaking factor of 3.77)	160838
Existing capacity (SCFM)	57600
Additional air required (SCFM)	103238

CLARIFIERS REQUIREMENT:

To get over flow rate of 650 gpd/sq.ft:	
Surface area required:	61538 sq.ft.
Existing surface area available:	62200 sq.ft.
Additional surface area required:	0 sq.ft.

No. of clarifier	0
Channels/tank	0
Diameter	0
Length	0
Width	0
Depth	0

PUMPING REQUIREMENT:

	Existing Capacity		Additional Capacity Required	
	(mgd)	(gpm)	(mgd)	(gpm)
ARCY PUMPS @ 200%Q	0	0	80	55555
RAS PUMPS @ 75%Q	27	18403	4	2431

COST CALCULATIONS:

TANKAGE CONCRETE COST:

	Anaerobic Tankage	Anoxic Tankage	Aerobic Tankage
Concrete volumes:			
sidewalls (cu.yd.)	237	237	237
endwalls (cu.yd.)	152	152	221
base slab (cu.yd.)	665	665	958
Concrete vol./tank (cu.yd.)	1054	1054	1416
Vol. of baffles (cu.yd.)	178	178	178
Concrete Cost per tank (@ $342.50/cu.yd. for concrete; $300.00/cu.yd. for baffles)	414395	414395	538380
Total concrete cost ($)	414395	414395	538380
Total concrete cost for additional tankage ($).	1367170		

MIXER COST:

	Anaerobic Tankage	Anoxic Tankage
Cost of mixers ($) (@ $12,000 per mixer)	132000	132000
Installation cost ($) (@ 20% of mixer cost)	26400	26400
Installed mixer cost ($)	158400	158400
Total installed mixer cost ($)		316800

PUMP COST: (ARCY, RAS AND PUMP BUILDING)	No. of Pumps	Unit Cost($)	Total Cost($)
ARCY PUMP:			
10,500 gpm pumps each	8	15000	120000
RAS PUMP:			
7,700 gpm pump each	1	26000	26000
Subtotal	9		146000
Installation(20%)			29200
Subtotal			175200
Pump building(40' x 50') @ ($40/sq.ft.)			80000
Total cost ($)			255200

CLARIFIER TANKAGE CONCRETE COST:

Concrete volumes:	
sidewalls (cu.yd.)	0
endwalls (cu.yd.)	0
base slab (cu. yd.)	0
Concrete volume (cu.yd.)	0
Concrete Cost (@ $342.50/cu.yd. for concrete;	0
Equipment cost @ 40%	0
Installation @ 20%	0
Total cost for clarifiers ($)	0

BLOWERS & DIFFUSERS COST

	QTY.	SCFM	COST EACH($)	CONTROL PKG.($)	TOTAL COST($)
Blowers	6.00	20000	120000	2000	732000
Installation @ 20%					146400
Diffusers @ $30 per SCFM					3600000
Total installed cost ($)					4478400

ANAEROBIC DIGESTION SUPERNATANT SYSTEM COST:

Total cost ($) (Appendix C-15)	183463

ALUM FEED SYSTEM COST:

Total cost ($) (Appendix C-17)	110667

MISCELLANEOUS COST:

Pipe Tunnel- RAS + Recycle Pumping	2000000

TOTAL EQUIPMENT COST ($): 8711000

INCREMENTAL O & M COST SUMMARY:

Maintenance and materials cost: (3% of total construction)	682070
Labor cost:(current plant budget = $3,537,000) 25% of existing budget is labor cost	884250
Chemicals: Includes Lime & Alum addition	146470

Power:

	HP	kW	kWHr/ YEAR	Cost @ $0.07/kWHr.
Mixers	172	129	1101405	77098
Pumps:				
ARCY	600	449	3834547	268418
RAS	100	75	639091	44736
Blowers:	5400	4039	34510925	2415765
Total power cost:				2806018

TOTAL O & M COST ($): 4518807

LOW LEVEL NUTRIENT DISCHARGE (TP = 0.5 mg/l; TN = 3 mg/l)

INCREMENTAL CONSTRUCTION COST

TANKAGE REQUIREMENT SUMMARY FOR LLND RETROFIT

	Tankage Required 1000cu.ft.	Req'mts Met by Exist Tkg 1000cu.ft	Addl'n Tkg. Reqd. 1000cu.ft.	Surf. Area Reqd. sq.ft.	Land Area Available sq.ft.
Anaerobic(2Hr)	446	0	446		
1st Anoxic(3Hr)	668	0	668		
Aerobic(9Hr)	2005	1020	985		
2nd Anoxic(3Hr)	668	0	668		
Rearation(1Hr)	223	0	223		
Total	4010	1020	2990	175882 *	114000

* Based on an average tank depth of 17 ft.

From the above table it is determined that due to the shortage of land availability it will not be feasible to retrofit the 5 stage Bardenpho process to meet the LLND limits.

Alternatively the LLND limits can be achieved by retrofiting the 3 stage A2O process with alum addition and converting the existing filters to deep bed denitrification filters with methanol addition facilities.

Total equipment cost for HLND ($)	8711000
Equipment cost for denitrification filters ($)	3273000
TOTAL EQUIPMENT COST ($):	11984000

* NOTE: The cost provided for the denitrification filters is not site specific but based on a generic retrofit.

TOTAL COST SUMMARY

INCREMENTAL CONSTRUCTION COST SUMMARY FOR ARLINGTON WWTP, X $1000

COST ITEM		HLND	LLND
Tankage requirements	$	1367	1367
Mixers	$	317	317
Clarifiers	$	0	0
Pumps-ARCY, RAS, Bldg. for pumps	$	255	255
Alum Feed	$	111	111
Supernatant System	$	183	183
Blowers & Duffusers	$	4478	4478
Eff. Filter-Pumps, Structure, Media	$	----	3273
Miscellaneous costs	$	2000	2000
SUBTOTAL		8711	11984
Non Component Cost (1)		5929	10839
TOTAL CONSTRUCTION		14640	22823
Eng. & Const. Supervision(19%) (2)		2782	4336
SUBTOTAL		17422	27159
Contingencies(20%)		3484	5432
Interest during construction(1/2PCI)		1829	2852
TOTAL CAPITAL COST		22736	35443 (3)

NOTES:
(1) Non-Component cost includes electrical, instrumentation, yard piping, site preparation & misc. work, and retrofit-construction added cost.
(2) Engineering(10%), construction supervision(9%).
(3) This cost is not based on asite specific evaluation.

INCREMENTAL O & M COST SUMMARY

ITEM	HLND	LLND
Maintenance & Materials	682	1063
Labor	884	884
Chemicals	146	672
Power	2806	2829
SUBTOTAL	4518	5448
TOTAL ANNUAL COST(1)	6985	9294

NOTES:
(1) Total annual cost is O & M cost and annualized capital using 0.1085 capital recovery factor at 8.875 % interest rate.

APPENDIX D-2

HOPEWELL WATER POLLUTION CONTROL PLANT

TABLE OF CONTENTS

SECTION	PAGE
1.0 Description of Existing Facilities	1
2.0 Proposed Plant Modifications	9
3.0 Proposed Retrofiting for Biological Nutrient Removal	9
4.0 Total Cost Summary	15

APPENDIX D-2

HOPEWELL WATER POLLUTION CONTROL PLANT

1.0 DESCRIPTION OF EXISTING FACILITIES

The Hopewell Virginia Wastewater Treatment Plant (WWTP) serves as a major domestic and industrial wastewater treatment facility. Preliminary treatment consists of bar screens and high rate grit chambers. The wastewater is then subjected to primary clarification. Secondary treatment is accomplished in a pure oxygen activated sludge system with secondary clarification. Wastewater is then discharged into the James River.

Sludge from the primary clarifier goes to a gravity thickener and to a sludge holding tank. Waste activated sludge goes to an air flotation thickener and a sludge holding tank. The combined thickened primary and waste activated sludge is then sent for heat treatment. The sludge is dewatered on vacuum filters and the dewatered sludge cake is incinerated in an a multiple hearth. The ash is taken to the City of Hopewell landfill and the supernatant, filtrates and scrubber water flows are returned to the head of the primary clarifier. Figure D.2.1 presents the existing process flow diagram for the Hopewell regional wastewater treatment facility. Figure D.2.2 is the site plan which depicts the land area available that could be utilized to meet the additional tankage requirements for HLND and LLND. Figure D.2.3 and D.2.4 are the proposed flow diagrams for HLND and LLND processes.

The present design flow capacity for the plant is 50 MGD, with an average reported flow of 33 MGD in FY 86. Table D.2.1 describes the average annual influent, effluent characteristics and the current NPDES requirements.

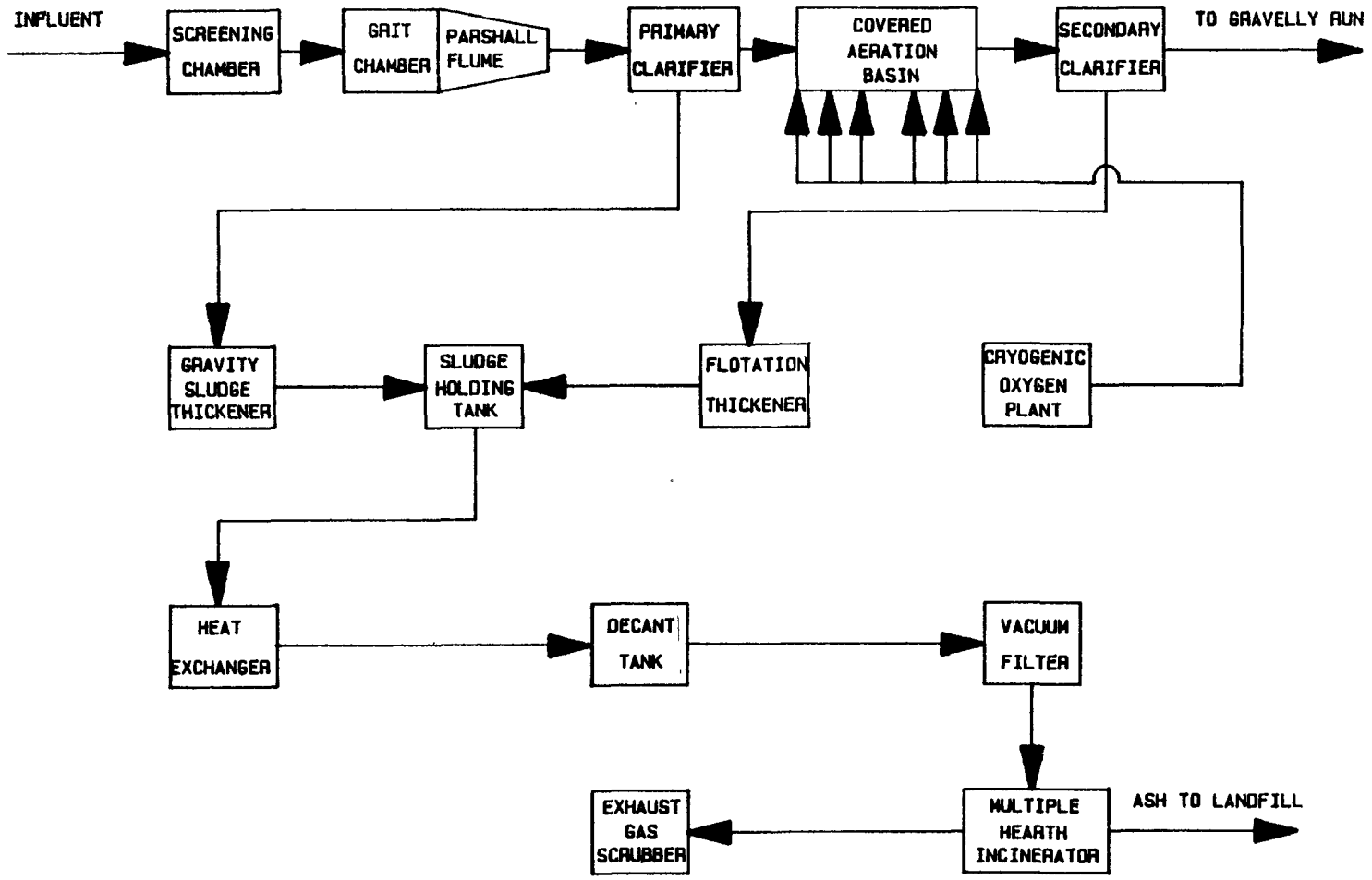

FIGURE D.2.1 EXISTING PROCESS FLOW DIAGRAM

HOPEWELL REGIONAL WASTEWATER TREATMENT FACILITY

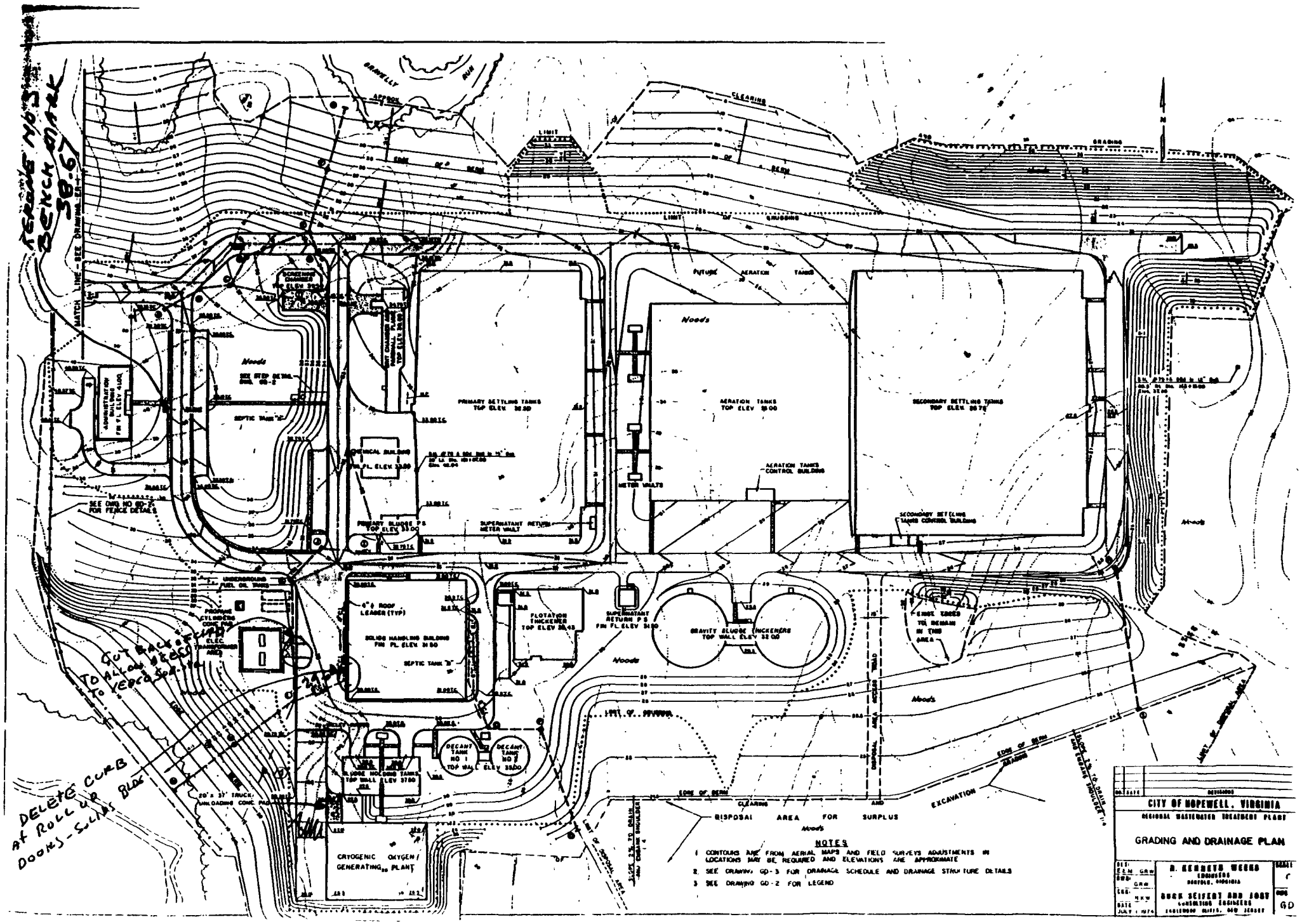
CITY OF HOPEWELL, VIRGINIA
REGIONAL WASTEWATER TREATMENT PLANT
GRADING AND DRAINAGE PLAN
NOTES
1 CONTOURS ARE FROM AERIAL MAPS AND FIELD SURVEYS ADJUSTMENTS IN LOCATIONS MAY BE REQUIRED AND ELEVATIONS ARE APPROXIMATE
2. SEE DRAWING GD-3 FOR DRAINAGE SCHEDULE AND DRAINAGE STRUCTURE DETAILS
3 SEE DRAWING GD-2 FOR LEGEND
PRIMARY SETTLING TANKS
AERATION TANKS
SECONDARY SETTLING TANKS
SOLIDS HANDLING BUILDING
FLOTATION THICKENER
GRAVITY SLUDGE THICKENERS
DECANT TANK NO 1
DECANT TANK NO 2
CRYOGENIC OXYGEN GENERATING PLANT
DISPOSAL AREA FOR SURPLUS
EXCAVATION
Woods
DELETE CURB AT ROLL UP DOORS - SLIDE BLDG

Figure D.2.2

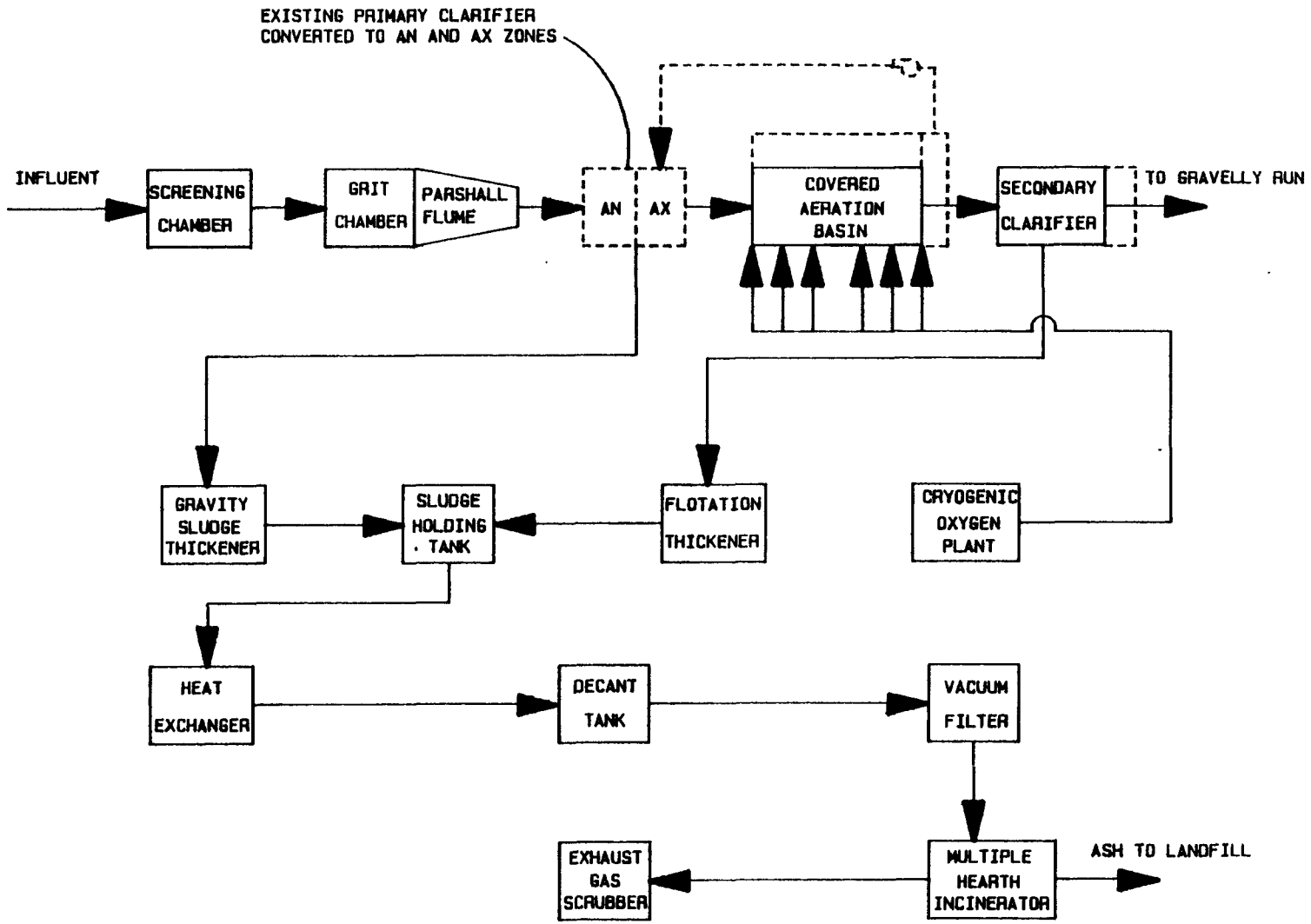

FIGURE D.2.3 PROCESS FLOW DIAGRAM
HOPEWELL REGIONAL WASTEWATER
TREATMENT FACILITY (HLND)

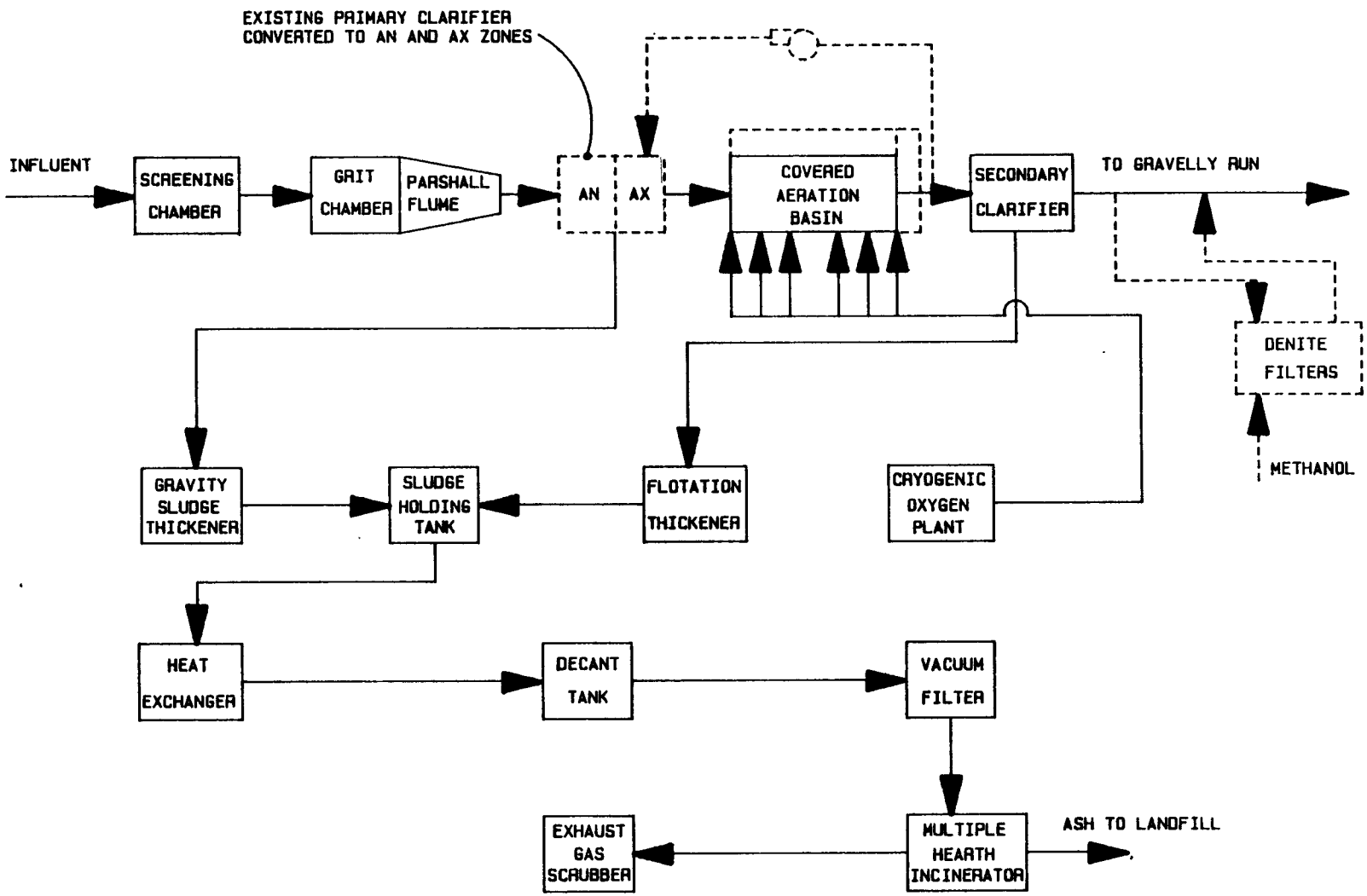

FIGURE D.2.4 PROCESS FLOW DIAGRAM
HOPEWELL REGIONAL WASTEWATER
TREATMENT FACILITY (LLND)

TABLE D.2.1

HOPEWELL WWTP RAW SEWAGE, INFLUENT AND EFFLUENT CHARACTERISTICS AND CURRENT NPDES PERMIT REQUIREMENTS
(Yearly Average)

PARAMETER	INFLUENT	EFFLUENT	NPDES PERMIT
BOD, mg/l	250	25	9
TSS, mg/l	200	40	16
pH	8.0 - 10.5	6.1 - 7.0	6 - 9
TP, mg/l		0.5	NA
NH_3, mg/l	25 - 55	25 - 55	NA
TKN, mg/l	30 - 60	30 - 60	NA

NA - Not Available

The existing plant components and sizes are summarized below:

Preliminary
Treatment: Screening Chambers

- Mechanical units (2); 3/8" x 2" @ 1" spacing, 75° slope. Removes 5 cuft of screening/MGD. Hydraulic capacity = 35 MGD

- Manual units (1); 1/4" x 2" bars @ 3" spacing, 60° slope. Hydraulic capacity = 35 MGD

- Conveyors (3); 1 HP, 2 amp 24 hours/day. Grit chambers
- 3 channels each 8 feet W x 5'5" D x 65 feet L. Chain drives (3); 1 HP, 2 amp, 24 hours/day

- Conveyor screws (2); 1 HP, 2 amp, 24 hours/day. Removal of 0.2 mm grit at max flow of 70 MGD. Normal hydraulic capacity/channel = 16.7 MGD.

- Parshall Flume; 10 feet flume with indicator, recorder and totalizer. Capacity range 4 to 130 MGD.

Primary Treatment:

- Primary settling tanks (8), each 40 feet W x 200 feet L x 10 feet D. Total volume of each tank = 598,400 gallons; Tank slope 1/16"/foot toward the sludge hopper.

- Sludge collection (8); longitudial and cross collectors. Scrapers drive driven by 0.75 HP 1.45 amp electric motor.

- Primary sludge pumping station (2); Gould, each rated at 600 gpm driven by a 25 HP, 32 amp electric motor.

Secondary Treatment:

- Aeration basins (4) each 60 feet W x 240 feet L x 13.5 feet D; number of trains = 4, 4 stages/train; each train 240 feet L x 60 feet x 13.5 feet D. Volume - each stage = 360,000 gallons.

- Return activated sludge pumps (8), sludge return rate - 37.93 MGD; waste activated sludge pumps (8), rated at 5000 gpm each driven by 40 HP, 50 amps.

- Recirculation pumps (6), rated at 1440 gpm.

- Secondary setting tanks (8), each 40 feet W x 285 feet L x 14 feet D; surface area 1140 sqft (each). Normal hydraulic capacity 1 unit = 6.25 MGD.

Gravity Sludge Thickeners:

- Two each 95 feet in diameter, 10 feet depth; hydraulic loading rate - 569 gpd/sqft; surface loading rate 7.5 lb/d/sqft

Flotation Thickners:

- Three (3) each 42 feet L x 20 feet W x 13 feet D; surface area of each 797 sqft

Sludge Holding Tanks:

- Two (2); surface area 45 sqft; SWD of 24' each; storage capacity = 700,000 total gals.

Sludge Heating System:

- Heat exchangers (3); 900 gph capacity each; temp. - 428°F

Vacuum Filters:

- Four (4) each 12 feet in diameter x 14 feet long. Filter surface area - 548 sqft each. Inclined belt conveyors (2).

Multiple Hearth Incinerator:

- One (1); furnace 22' 3" in diameter; hearth (8); 2064 sqft effective burning area.

2.0 PROPOSED MODIFICATION

The plant has an average flow of 33 MGD and is designed for 50 MGD. None of the effluent limits are met as per the Virginia Department of Health inspection report. Presently, nutrient discharge limitations are not required by the plant. Toxicity testing on the effluent has been requested by the State Water Control Board for priority pollutant and non-priority pollutant votatile organics. No major modifications to the plant are planned.

3.0 PROPOSED RETROFITTING FOR BIOLOGICAL NUTRIENT REMOVAL

The modification to retrofit the existing treatment plant for HLND and LLND levels would require the addition of anaerobic and anoxic zones prior to an increased capacity of the aeration zone. The existing covered pure oxygen aeration basin would be utilized as part of the aeration requirements of the BNR process design and additional tankage would be built. Additional clarifiers would be provided to get an overall overflow rate of 400 gpd/sqft and the required pumps and mixers would be installed into the various zones.

The plant currently has no problem in meeting the phosphorus limits. In fact they are adding phosphorus as a nutrient. The design of this plant calls only for nitrification/denitrification and no addition of Alum for phosphorus removal although alum addition facilities will be provided. As the plant has existing pure oxygen unox process, the additional tankage required would also be built as covered aeration tanks. The detention time required for such pure oxygen system would be lower than normal activated sludge basis and thus the detention time for aeration used under pure oxygen system for A_2O process is estalished as four (4) hours instead of six (6) hours. Due to the shortage of land area availability, retrofitting the five (5) stage Bardenpho Process will not be feasible. In order to meet the LLND requirements by BNR process, the proposal would include the HLND (A_2O) process followed by a reactor clarifier and denite filter with methanol addition.

The cost estimates for both the levels of treatment i.e. the HLND and LLND are as follows:

HIGH LEVEL NUTRIENT DISCHARGE (TP = 2 mg/l; TN = 8 mg/l)

INCREMENTAL CONSTRUCTION COST

TANKAGE REQUIREMENT SUMMARY FOR HLND RETROFIT

	Tankage Required 1000 cu.ft.	Req'mts Met by Exist. Tk 1000 cu.ft.	Addl'n Tkg. Reqd.	Surf. Area Reqd. sq. ft.	Land Area Available sq. ft.
Anaerobic(1Hr.)	278	0	278	20000	
Anoxic(1Hr.)	278	0	278	20000	
Aerobic(4Hr.) *	1115	778	337	23000	
Total	1671	778	893	63000	65100

* Based on pure oxygen unox process

TANKAGE REQUIREMENTS:(16" WALL, 14" BASE SLAB AND 8" BAFFLES)

	Anaerobic Tankage	Anoxic Tankage	Aerobic Tankage
No. of Tanks	1	1	1
No. of passes/tank	4	4	4
Length per pass (ft)	100	100	115
Width per pass (ft)	50	50	50
Depth per pass (ft)	15	15	15
Total volume (cu.ft.)	300000	300000	345000
No. of baffles/tank	3	3	3

MIXER REQUIREMENTS:

	Anaerobic Tankage	Anoxic Tankage
Volume of tanks (MG)	2.24	2.24
H.P. required (@ 50 HP/MG)	112	112
No. of Mixers (10 HP/mixer)	11	11
No. of standby mixers	2	2
Total no. of mixers	13	13
No. of mixers existing	0	0
No. of mixers required	13	13

AERATION REQUIREMENTS (Appendix C-8)

Plant design flowrate (MG)	50.00
Plant Influent BOD (mg/l)	250.00
Aeration Influent BOD (mg/l)	163.00
Plant Effluent BOD (mg/l)	25.00
BOD loading (mg/l)	138
Ammonia loading (mg/l)	50
Oxygen required (lbs/MG)	3184.
Total oxygen required (lb/day)	159211
Existing capacity (lbs/day)	200000
Additional Oxygen required	0

CLARIFIERS REQUIREMENT:

To get over flow rate of 400 gpd/sq.ft:	
Surface area required:	125000 sq.ft.
Existing surface area available:	91200 sq.ft.
Additional surface area required:	33800 sq.ft.

No. of clarifier	1
Channels/tank	3
Diameter	n/a ft.
Length	285
Width	40
Depth	12 ft.

PUMPING REQUIREMENT:

	Existing Capacity		Additional Capacity Required	
	(mgd)	(gpm)	(mgd)	(gpm)
ARCY PUMPS @ 200%Q	12	8640	88	61111
RAS PUMPS @ 75%Q	38	26389	0	0

COST CALCULATIONS:

TANKAGE CONCRETE COST:

	Anaerobic Tankage	Anoxic Tankage	Aerobic Tankage
Concrete volumes:			
sidewalls (cu.yd.)	148	148	170
endwalls (cu.yd.)	296	296	296
base slab (cu.yd.)	917	917	1049
top cover (cu.yd.)	0	0	1049
Concrete vol./tank (cu.yd.)	1361	1361	2564
Vol. of baffles (cu.yd.)	111	111	128
Concrete Cost per tank (@ $342.50/cu.yd. for concrete; $300.00/cu.yd. for baffles)	499443	499443	916570
Total concrete cost ($)	499443	499443	916570
Total concrete cost for additional tankage ($).	1915455		

MIXER COST:

	Anaerobic Tankage	Anoxic Tankage
Cost of mixers ($) (@ $12,000 per mixer)	156000	156000
Installation cost ($) (@ 20% of mixer cost)	31200	31200
Installed mixer cost ($)	187200	187200
Total installed mixer cost ($)		374400

PUMP COST: (ARCY, RAS AND PUMP BUILDING)	No. of Pumps	Unit Cost($)	Total Cost($)
ARCY PUMP:			
24,500 gpm pumps each	3	55000	165000
RAS PUMP:			
14,350 gpm pump each	0	44000	0
Subtotal	3		165000
Installation(20%)			33000
Subtotal			198000
Pump building(40' x 40') @ ($40/sq.ft.)			64000
Total Cost ($)			262000

CLARIFIER TANKAGE CONCRETE COST:

Concrete volumes:	
sidewalls (cu.yd.)	507
endwalls (cu.yd.)	107
base slab (cu. yd.)	1688
Concrete volume (cu.yd.)	2302
Concrete Cost (@ $342.50/cu.yd. for concrete;	788435
Equipment cost @ 40%	315374
Installation @ 20%	157687
Total cost for clarifiers ($)	1261496

AERATOR COST

	QTY.	H.P.	COST EACH($)	CONTROL PKG.($)	TOTAL COST($)
Surface aerator	5.00	50	20000	0	100000
Installation @ 20%					20000
Total installed cost ($)					120000

ANAEROBIC DIGESTION SUPERNATANT SYSTEM COST:

Total cost ($) (Appendix C-15)	193886

ALUM FEED SYSTEM COST:

Total cost ($) (Appendix C-17)	120000

TOTAL EQUIPMENT COST ($): 4246000

INCREMENTAL O & M COST SUMMARY:

Maintenance and materials cost: (3% of total construction)	319746
Labor cost:(current plant budget = $5,500,000) 25% of existing budget is labor cost	1375000
Chemicals: Includes Lime & Alum addition	184000

Power:

	HP	kW	kWHr/ YEAR	Cost @ $0.07/kWHr.
Mixers	260	194	1661637	116315
Pumps:				
ARCY	450	337	2875910	201314
RAS	0	0	0	0
Aerators:	250	187	1597728	111841

Total power cost ($):	429469
TOTAL O & M COST:	2308215

LOW LEVEL NUTRIENT DISCHARGE (TP = 0.5 mg/l; TN = 3 mg/l)

INCREMENTAL CONSTRUCTION COST

TANKAGE REQUIREMENT SUMMARY FOR LLND RETROFIT

	Tankage Required 1000cu.ft.	Req'mts Met by Exist Tkg 1000cu.ft	Addl'n Tkg. Reqd. 1000cu.ft.	Surf. Area Reqd. sq.ft.	Land Area Available sq.ft.
Anaerobic(2Hr)	557	0	557	32765	
1st Anoxic(3Hr)	836	0	836	49176	
Aerobic(7Hr) *	1950	778	1172	68941	
2nd Anoxic(3Hr)	836	0	836	49176	
Rearation(1Hr)	278	0	278	16353	
Total	4457	778	3679	216412	65100

* Based on a pure oxygen ùnox process

* Based on an average depth of 17 ft.

From the above table it is determined that due to the shortage of land availability it will not be feasible to retrofit the 5 stage Bardenpho process to meet the LLND limits.

Alternatively the LLND limits can be achieved by retrofiting the 3 stage A2O process with alum addition and converting the existing filters to deep bed denitrification filters with methanol addition facilities.

Total equipment cost for HLND ($)	4246000
Equipment cost for denitrification filters ($)	4118000
TOTAL EQUIPMENT COST ($):	8364000

* NOTE: The cost provided for the denitrification filters is not site specific but based on a generic retrofit.

TOTAL COST SUMMARY

INCREMENTAL CONSTRUCTION COST SUMMARY FOR HOPEWELL WWTP, X $1000

COST ITEM		HLND	LLND
Tankage requirements	$	1915	1915
Mixers	$	374	374
Clarifiers	$	1261	1261
Pumps-ARCY, RAS, Bldg. for pumps	$	262	262
Alum Feed	$	120	120
Supernatant System	$	194	194
Blowers, Diffusers, & Aerators	$	120	120
Eff. Filter-Pumps, Structure, Media	$	0	4118
SUBTOTAL		4246	8364
Non Component Cost (1)		2617	5500
TOTAL CONSTRUCTION		6863	13864
Eng. & Const. Supervision(19%) (2)		1304	2634
SUBTOTAL		8167	16498
Contingencies(20%)		1633	3300
Interest during construction(1/2PCI)		858	1732
TOTAL CAPITAL COST		10658	21530 (3)

NOTES:
(1) Non-Component cost includes electrical, instrumentation, yard piping, site preparation & misc. work, and retrofit-construction added cost.
(2) Engineering(10%), construction supervision(9%).
(3) This cost is noy based on a site specific evaluation

INCREMENTAL O & M COST SUMMARY

ITEM	HLND	LLND
Maintenance & Materials	320	646
Labor	1375	1450
Chemicals	184	877
Power	429	460
SUBTOTAL	2308	3433
TOTAL ANNUAL COST(1)	3464	5769

NOTES:
(1) Total annual cost is O & M cost and annualized capital using 0.1085 capital recovery factor at 8.875 % interest rate.

APPENDIX D-3

LOWER POTOMAC POLLUTION CONTROL PLANT

TABLE OF CONTENTS

SECTION	PAGE
1.0 Description of Existing Facilities	1
2.0 Proposed Plant Modifications	10
3.0 Proposed Retrofiting for Biological Nutrient Removal	11
4.0 Total Cost Summary	20

APPENDIX D-3

LOWER POTOMAC POLLUTION CONTROL PLANT

1.0 DESCRIPTION OF EXISTING FACILITIES

The original Lower Potomac Pollution Control Plant (LPPCP) was expanded in the late 1970's from 18 MGD to 36 MGD by adding advanced waste treatment processes. The current flows reaching the treatment plant are domestic in nature. The wastewater treatment facilities consist of mechanical screening, primary sedimentation, aeration, and secondary sedimentation, equalization, chemical phosphorus precipitation, gravity filtration and chlorination.

Sludge from primary and secondary clarifiers is treated by thickening, conditioning, dewatering and incineration. The sludge from chemical tertiary treatment is sent to a sanitary landfill.

Figure D.3.1 is a schematic of the existing plant showing the main liquid stream unit processes as designed. Figure D.3.2 is the layout of the existing plant facilities. Figure D.3.3 and D.3.4 is a schematic of the proposed treatment processes to meet the HLND and LLND targets. Land area available for expansion and/or retrofitting is included in the planned expansion discussed later and site visits indicate ample land area available for any expansion and/or modification.

Average annual plant loading and effluent quality are shown in Table D.3.1. As can be seen, the facility achieves excellent BOD, TSS and phosphorous removal. Its performance is poor for ammonia removal and does not meet the NPDES permit for TKN removal to <1 mg/l.

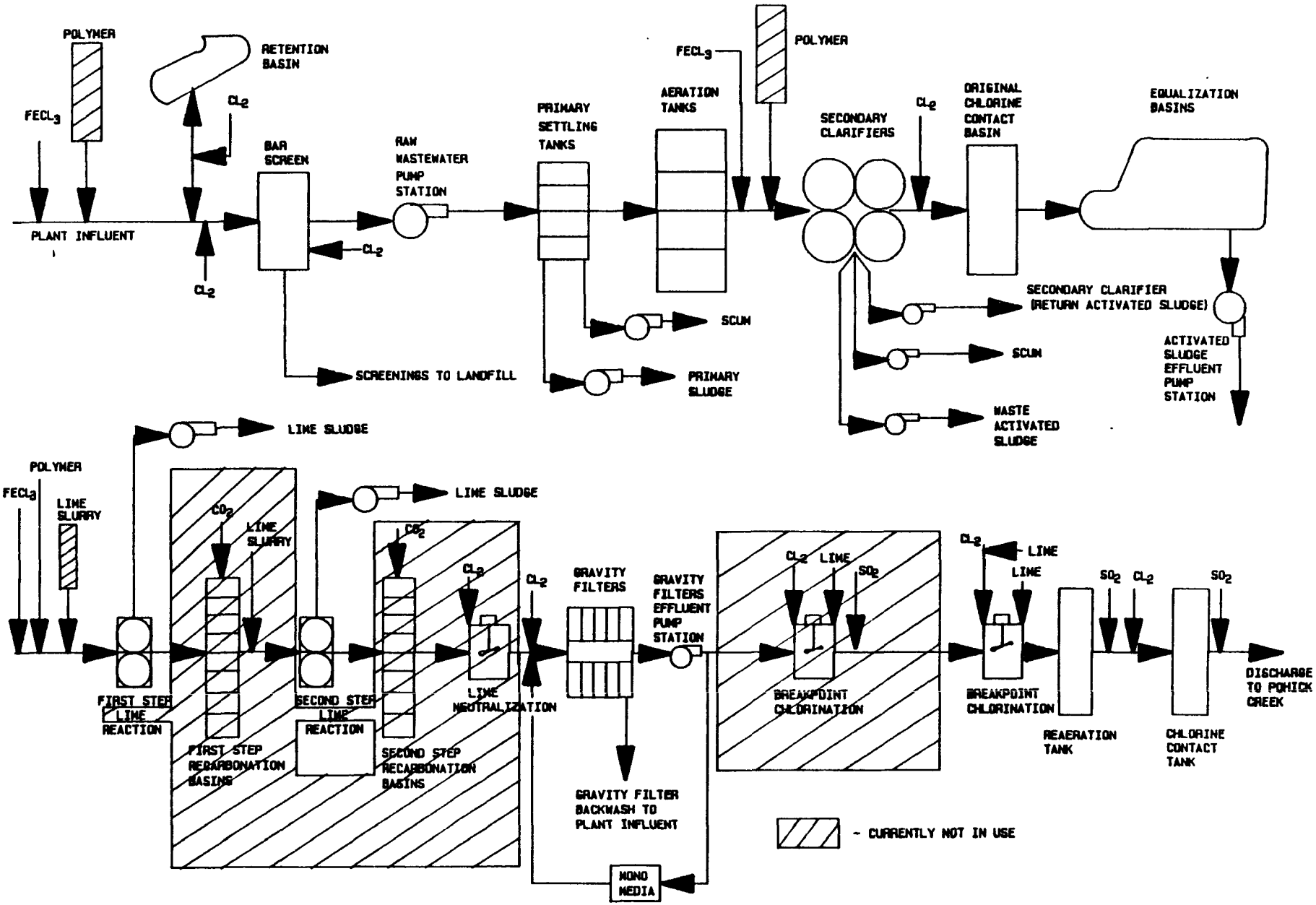

FIGURE D.3.1 EXISTING PROCESS FLOW DIAGRAM FOR LPPCP

Figure D.3.2

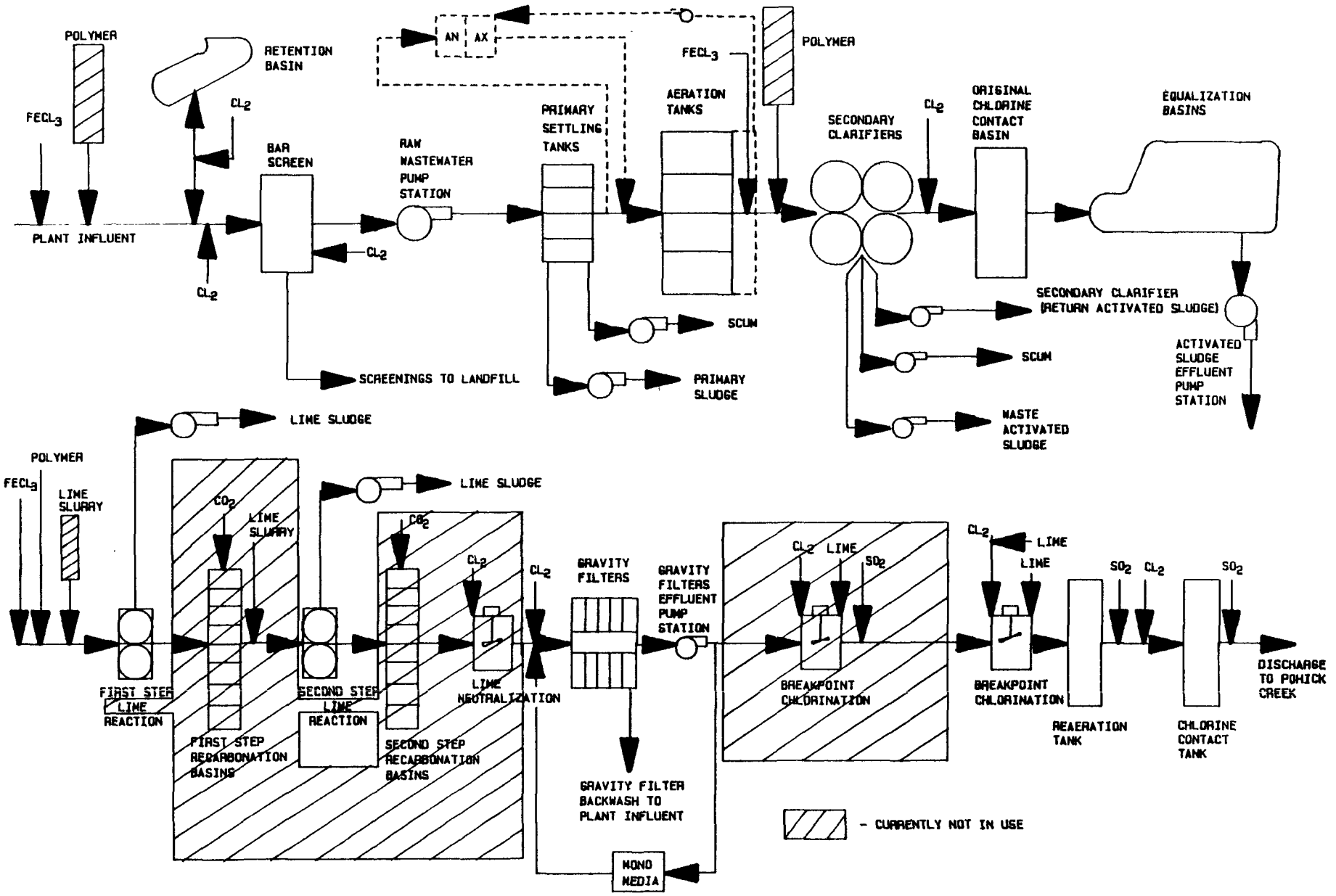

FIGURE D.3.3 PROPOSED PROCESS FLOW DIAGRAM FOR LPPCP (HLND)

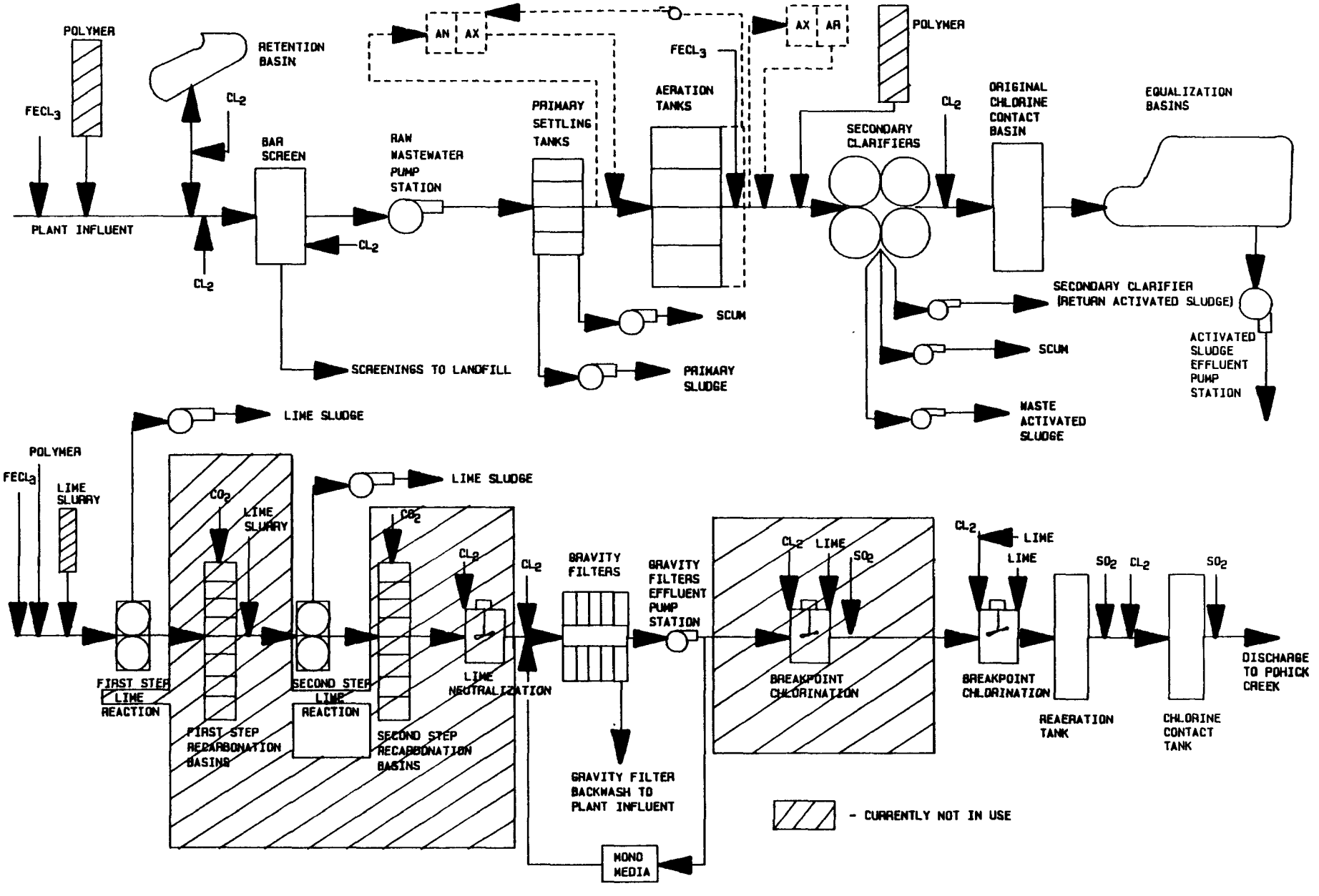

FIGURE D.3.4 PROPOSED PROCESS FLOW DIAGRAM FOR LPPCP (LLND)

TABLE D.3.1

LPPCP RAW SEWAGE AND EFFLUENT CHARACTERISITICS
(JUNE 1986 - JUNE 1987)

Parameter	Influent	Effluent	NPDES Permit
Flow MGD	33	33	36
BOD_5, mg/l	175	7	10
COD, mg/l	377	29	--
TSS, mg/l	218	0.8	10
Phosphorous, mg/l	7	0.1	0.18
pH	9.2	6 - 9	6 - 9
Temp., ^oC	21	21^oC	--
Alkalinity, mg/l	172	117	--
Chloride, mg/l	57	98	--
TKN, mg/l	36	19	1
NH_3-N, mg/l	19	16	--
NO_2-N, mg/l	0.50	0.6	--
NO_3-N, mg/l	0.74	1.1	--

Major Existing Plant Components and Unit Sizes:

Liquid Processes

Raw wastewater retention basin	1 basin; 5.7 MG effective volume; 3 mechanically cleaned bar screens at 55 MGD each
Primary clarifiers	4 tanks; 139 ft x 45 ft x 10 ft SWD; 1080 gpd/sqft and 1.7 hours detention time at design flow
Aeration tanks	6 three-pass tanks with each pass 182 ft x 30 ft x 15 ft SWD; 7 MG net volume; 4.8 hours detention at design flow.
Aeration blowers	6 centrifugal displacement units; 80,000 cfm total capacity at 8 psig.
Secondary clarifiers	4-120 ft dia. tanks x 10.5 ft SWD; 800 gpd/sqft and 2.4 hours detention time. 4 - 145 ft dia. tanks X 16 ft SWD; 545 gpd/sqft and 5.3 hours detention time.
Secondary chlorination tanks	2 tanks 70 ft x 61.5 ft x 8 ft SWD; 21 min. detention at design flow
Equalization basins	2 basins; 13.3 MG effective volume; 12 mixer aerators.
Final and second stage reactor clarifiers	4 tanks each 148 ft x 148 ft x 20 ft SWD; 822 gpd/sqft and 4.5 hours detention at design flow plus back wash return

Multimedia filters	10 gravity filters, 30 ft x 30 ft; 3.1 gpm/sqft at design flow
Monomedia	8 gravity basins 34 ft x 34 ft; 5 ft carbon bed depth; 3.1 gpm/sqft (8 basins at design flow); down flow
Reaeration tank	1 tank 72 ft x 70.3 ft 22 ft SWD; 30 min. detention at design flow
Post-chlorination tank	1 tank 72 ft x 72 ft x 20 ft SWD; 31 min. detention at design flow
<u>Solids Processes</u>	
Gravity thickeners	4-50 ft dia. tanks x 10 ft SWD (8 lb/day/sqft design loading-includes pri. and WAS)
Flotation thickners	3 tanks 40.2 ft x 12 ft x 12 ft SWD; 1.6 lb/hr/sq ft design loading
Sludge storage tanks	2-50 ft diameter tanks x 25 ft effective SWD; total capacity 759,000 gals
Variable volume filter press	6 units,
Incineration	4 multiple hearth furnances; 2-6 hearth units @ 25.75 ft dia; 2-7 hearth units @ 18.75 ft dia; total installed capacity 608 wet ton/day; wet cake at 82% moisture
Lime sludge thickeners	2 gravity units - 30 ft dia x 20 ft SWD; 100 lbs/day/sqft lime design loading

Lime sludge centrifuges	3 solids-bowl units; total installed mass lime solids load 270 tons/day
Sludge incineration	2 multiple hearth units; 22-25 ft dia with 8 hearths; total installed max lime capacity 400 dry tons/day

2.0 PROPOSED PLANT MODIFICATIONS

The wastewater treatment facility is currently under a major expansion from its design flow capacity of 36 MGD to 54 MGD. The expansion commenced in 1983 and is projected to end in the middle of 1992. The expansion is based on a non-nitrifying design but with provisions to incorporate nitrification if required in the future. Earlier modifications and in plant operation in the early 1970's and required effluent standards had resulted in certain equipment not being currently operated or required. The current planned expansion will therefore focus emphasis on potential utilization of current surplus facilities such as the existing activated carbon system, tertiary lime recalcination system, recarbonation system and such other unit processes that can be effectively utilized. The major additions and/or modifications to be constructed as part of the planned plant expansion are listed below:

- Addition of 1 screen building to the current facility
- Addition of 2 flash mixing tanks
- Four additional primary settling tanks
- Two new additional aeration tanks
- Change all present positive displacement blowers to centrifugal blowers and add one more blower to meet the projected capacity.
- Addition of four new secondary clarifiers to the present requirements
- Five new gravity filters with building (studies are underway to modify the existing activated carbon adsorption units to gravity filters)
- A new additional backwash storage tank
- A new additional dissolved air flotation unit
- Two additional new gravity sludge thickners
- A new sludge processing and sludge handling facility
- Odor control equipment

The total project cost for the proposed modifications are estimated to be 100 million dollars as proposed by Engineering Science(ES) of Fairfax, Virginia.

3.0 PROPOSED RETROFITING FOR BIOLOGICAL NUTRIENT REMOVAL

The proposed retrofit for BNR process to meet the HLND and LLND limits would require additional tankage to accommodate the anaerobic and anoxic zones for both alternatives. The secondary clarifiers will be added to obtain an overflow rate of 600 gpd/sqft as the plant was existing tertiary filters. The retrofit details of the two levels of treatment are presented as follows.

HIGH LEVEL NUTRIENT DISCHARGE (TP = 2 mg/l; TN = 8 mg/l)

INCREMENTAL CONSTRUCTION COST

TANKAGE REQUIREMENT SUMMARY FOR HLND RETROFIT

	Tankage Required 1000 cu.ft.	Req'mts Met by Exist. Tk 1000 cu.ft.	Addl'n Tkg. Reqd.	Surf. Area Reqd. sq. ft.	Land Area Available sq. ft.
Anaerobic(1Hr.)	301	0	301	20520	
Anoxic(1Hr.)	301	0	301	20520	
Aerobic(6Hr.)	1805	983	822	54720	
Total	2407	983	1424	95760	262800

TANKAGE REQUIREMENTS:(16" WALL, 14" BASE SLAB AND 8" BAFFLES)

	Anaerobic Tankage	Anoxic Tankage	Aerobic Tankage
No. of Tanks	2	2	4
No. of passes/tank	3	3	4
Length per pass (ft)	180	180	180
Width per pass (ft)	19	19	19
Depth per pass (ft)	15	15	16
Total volume (cu.ft.)	307800	307800	875520
No. of baffles/tank	2	2	3

MIXER REQUIREMENTS:

	Anaerobic Tankage	Anoxic Tankage
Volume of tanks (MG)	2.30	2.30
H.P. required (@ 50 HP/MG)	115	115
No. of Mixers (10 HP/mixer)	12	12
No. of standby mixers	3	3
Total no. of mixers	15	15
No. of mixers existing	0	0
No. of mixers required	15	15

AERATION REQUIREMENTS (Appendix C-8)

Plant design flowrate (MG)	54
Plant Influent BOD (mg/l)	200
Aeration Influent BOD (mg/l)	130
Plant Effluent BOD (mg/l)	7
BOD loading (mg/l)	123
Ammonia loading (mg/l)	19
Oxygen required (lbs/MG)	1857
Air required (SCFM)	67294
Air required (SCFM) (@ peaking factor of 2.5)	168235
Existing capacity (SCFM)	80000
Additional air required (SCFM)	88235

CLARIFIERS REQUIREMENT:

To get over flow rate of 600 gpd/sq.ft;	
Surface area required:	90000 sq.ft.
Existing surface area available:	45239 sq.ft.
Additional surface area required:	44761 sq.ft.

No. of clarifier	4
Channels/tank	n/a
Diameter	120 ft.
Length	n/a
Width	n/a
Depth	11 ft.

PUMPING REQUIREMENT:

	Existing Capacity		Additional Capacity Required	
	(mgd)	(gpm)	(mgd)	(gpm)
ARCY PUMPS @ 200%Q	0	0	108	75000
RAS PUMPS @ 75%Q	10	6944	31	21528

COST CALCULATIONS:

TANKAGE CONCRETE COST:

	Anaerobic Tankage	Anoxic Tankage	Aerobic Tankage
Concrete volumes:			
sidewalls (cu.yd.)	267	267	284
endwalls (cu.yd.)	84	84	120
base slab (cu.yd.)	485	485	636
Concrete vol./tank (cu.yd.)	836	836	1040
Vol. of baffles (cu.yd.)	133	133	213
Concrete Cost per tank (@ $342.50/cu.yd. for concrete; $300.00/cu.yd. for baffles)	326230	326230	420100
Total concrete cost ($)	652460	652460	1680400
Total concrete cost for additional tankage ($).	2985320		

MIXER COST:

	Anaerobic Tankage	Anoxic Tankage
Cost of mixers ($) (@ $12,000 per mixer)	180000	180000
Installation cost ($) (@ 20% of mixer cost)	36000	36000
Installed mixer cost ($)	216000	216000
Total installed mixer cost ($)		432000

PUMP COST: (ARCY, RAS AND PUMP BUILDING)	No. of Pumps	Unit Cost ($)	Total Cost ($)
ARCY PUMP:			
24,500 gpm pumps each	5	55000	275000
RAS PUMP:			
14,350 gpm pump each	3	44000	132000
Subtotal	8		407000
Installation(20%)			81400
Subtotal			488400
Pump building(30' x 40') @ ($40/sq.ft.)			48000
Total ($)			536400

CLARIFIER TANKAGE CONCRETE COST:

Concrete volumes:	
sidewalls (cu.yd.)	1249
endwalls (cu.yd.)	0
base slab (cu. yd.)	2088
Concrete volume (cu.yd.)	3337
Concrete Cost (@ $342.50/cu.yd. for concrete;	1142923
Equipment cost @ 40%	457169
Installation @ 20%	228585
Total cost for clarifiers ($)	1828676

BLOWERS & DIFFUSERS COST

	QTY.	SCFM	COST EACH	CONTROL PKG.($)	TOTAL COST ($)
Blowers	5	20000	120000	2000	610000
Installation @ 20%					122000
Diffusers @ $30 per SCFM					3000000
Total installed cost ($)					3732000

ANAEROBIC DIGESTION SUPERNATANT SYSTEM COST:

Total cost ($) (Appendix C-15)	226351

ALUM FEED SYSTEM COST:

Total cost ($) (Appendix C-17)	129600

TOTAL EQUIPMENT COST ($):	9870000

INCREMENTAL O & M COST SUMMARY:

Maintenance and materials cost:
(3% of total construction) 757268

Labor cost:(current plant budget = $5,666,124)
25% of existing budget is labor cost 1416531

Chemicals:
Includes Lime & Alum addition 197730

Power:

	HP	kW	kWHr/ YEAR	Cost @ $0.07/kWHr.
Mixers	230	172	1469910	102894
Pumps:				
ARCY	750	561	4793184	335523
RAS	450	337	2875910	201314
Blowers:	4500	3366	28759104	2013137

Total power cost ($): 2652868

TOTAL O & M COST ($): 5024397

LOW LEVEL NUTRIENT DISCHARGE (TP = 0.5 mg/l; TN = 3 mg/l)

INCREMENTAL CONSTRUCTION COST

TANKAGE REQUIREMENT SUMMARY FOR LLND RETROFIT

	Tankage Required 1000cu.ft.	Req'mts Met by Exist Tkg 1000cu.ft	Addl'n Tkg. Reqd. 1000cu.ft.	Surf. Area Reqd. sq.ft.	Land Area Available sq.ft.
Anaerobic(2Hr)	602	0	602	34560	
1st Anoxic(3Hr)	902	0	902	53760	
Aerobic(9Hr)	2707	983	1724	103680	
2nd Anoxic(3Hr)	902	0	902	53760	
Rearation(1Hr)	301	0	301	19000	
Total	5414	983	4431	264760	262800

TANKAGE REQUIREMENTS:(16" WALL, 14" BASE SLAB AND 8" BAFFLES)

	Anaerobic Tankage	1st Anoxic Tankage	Aerobic Tankage	2nd Anoxic Tankage	Reaeration Tankage
No. of Tanks	2	2	4	2	2
No. of passes/tank	3	4	4	4	2
Length per pass (ft.)	240	240	240	240	190
Width per pass (ft.)	24	28	27	28	25
Depth per pass (ft.)	18	17	17	17	17
Total volume (cu.ft.)	622080	913920	1762560	913920	323000
No. of baffles/tank	2	3	5	3	1

MIXER REQUIREMENTS:

	Anaerobic Tankage	1 st Anoxic Tankage	2 nd Anoxic Tankage
Volume of tanks (MG)	4.65	6.75	6.75
H.P. required (@ 50 HP/MG)	233	338	338
No. of Mixers (10 HP/mixer)	24	34	34
No. of standby mixers	5	7	7
Total no. of mixers	29	41	41
No. of mixers existing	0	0	0
No. of mixers required	29	41	41

AERATION REQUIREMENTS (Appendix C-8)

Plant design flowrate (MG)	54
Plant Influent BOD (mg/l)	200
Aeration Influent BOD (mg/l)	130
Plant Effluent BOD (mg/l)	7
BOD loading (mg/l)	123
Ammonia loading (mg/l)	19
Oxygen required (lbs/MG)	2062
Air required (SCFM)	84418
Air required (SCFM) (@ peaking factor of 2.5)	211044
Existing capacity (SCFM)	80000
Additional air required (SCFM)	131044

CLARIFIERS REQUIREMENT:

To get over flow rate of 600 gpd/sq.ft:	
Surface area required:	90000 sq.ft.
Existing surface area available:	45239 sq.ft.
Additional surface area required:	44761 sq.ft.
No. of clarifier	4
Channels/tank	n/a
Diameter	120 ft.
Length	n/a
Width	n/a
Depth	11 ft.

PUMPING REQUIREMENT:

	Existing capacity (MG)		Additional capacity Required	
	(mgd)	(gpm)	(mgd)	(gpm)
ARCY PUMPS @ 400%	0	0	216	149999
RAS PUMPS @ 100% Q	10	6944	44	30555

COST CALCULATIONS:

TANKAGE CONCRETE COST:

	Anaerobic Tankage	1st Anoxic Tankage	Aerobic Tankage	2nd Anoxic Tankage	Reaeration Tankage
Concrete volumes:					
sidewalls (cu.yd.)	427	403	403	403	319
endwalls (cu.yd.)	128	188	181	188	84
base slab (cu.yd.)	801	1223	1181	1223	453
Concrete vol./tank (cu.yd.)	1356	1814	1765	1814	856
Vol. of baffles (cu.yd.)	213	302	504	302	80
Concrete Cost per tank (@ $342.50/cu.yd. for concrete; $300.00/cu.yd. for baffles)	528330	711895	755713	711895	317180
Total concrete cost ($)	1056660	1423790	3022850	1423790	634360
Total concrete cost for additional tankage ($).					7561450

MIXER COST:

	Anaerobic Tankage	1st Anoxic Tankage	2 nd Anoxic Tankage
Cost of mixers ($) (@ $12,000 per mixer)	348000	492000	492000
Installation cost ($) (@ 20% of mixer cost)	69600	98400	98400
Installed mixer cost ($)	417600	590400	590400
Total installed mixer cost ($)			1598400

PUMP COST: (ARCY, RAS AND PUMP BUILDING)

	No. of Pumps	Cost ($)	Total Cost ($)
ARCY PUMP:			
24,500 gpm pump each	8	55000	440000
RAS PUMP:			
14,350 gpm pump each	3	44000	132000
Subtotal	11		572000
Installation(20%)			114400
Subtotal			686400
Pump building(30' x 90') (@ $40/sq. ft.)			108000
Total Cost ($)			794400

CLARIFIER TANKAGE CONCRETE COST:

Concrete volumes:	
sidewalls (cu.yd.)	1249
endwalls (cu.yd.)	0
base slab (cu. yd.)	2088
Concrete volume (cu.yd.)	3337
Concrete Cost (@ $342.50/cu.yd. for concrete:	1142923
Equipment cost @ 40%	457169
Installation @ 20%	228585
Total cost for clarifiers ($)	1828676

BLOWERS & DIFFUSERS COST

	QTY.	SCFM	COST EACH ($)	CONTROL PKG.($)	TOTAL COST ($)
Blowers	7	20000	120000	0	840000
Installation @ 20%					168000
DIFFUSERS @ $30 per SCFM		131044			3931321
Total installed cost ($)					4939321

ANAEROBIC DIGESTION SUPERNATANT SYSTEM COST

Total cost ($) (Appendix C-15)	226351

ALUM FEED SYSTEM COST

Total cost ($) (Appendix C-17)	149400

TOTAL EQUIPMENT COST ($): 17096526

INCREMENTAL O & M COST SUMMARY:

Maintenance and materials cost (3% of total construction)	$	1302861
Labor cost:(current plant budget = $5,446,000) 25% of existing budget is labor cost	$	1361500
Chemicals: Includes Lime & Alum addition	$	526590

Power:

	HP	kW	kWHr/ YEAR	Cost @ $0.07/kWHr.
Mixers	901	674	5758212	403075
Pumps:				
ARCY	1200	898	7669094	536837
RAS	450	337	2875910	201314
Blowers:	6300	4712	40262746	2818392
Total Power Cost ($):				3959617

TOTAL O & M COST ($): 7150568

TOTAL COST SUMMARY

INCREMENTAL CONSTRUCTION COST SUMMARY FOR LPPCP WWTP, X $1000

COST ITEM		HLND	LLND
Tankage requirements	$	2985	7561
Mixers	$	432	1598
Clarifiers	$	1829	1829
Pumps-ARCY, RAS, Bldg. for pumps	$	536	794
Alum Feed	$	130	149
Supernatant System	$	226	226
Blowers & Duffusers	$	3732	4939
Eff. Filter-Pumps, Structure, Media	$	----	----
SUBTOTAL		9870	17097
Non Component Cost (1)		6384	10869
TOTAL CONSTRUCTION		16254	27965
Eng. & Const. Supervision(19%) (2)		3088	5313
SUBTOTAL		19343	33279
Contingencies(20%)		3869	6656
Interest during construction(1/2PCI)		2031	3494
TOTAL CAPITAL COST		25242	43429

NOTES:
(1) Non-Component cost includes electrical, instrumentation, yard piping, site preparation & misc. work, and retrofit-construction added cost.
(2) Engineering(10%), construction supervision(9%).

INCREMENTAL O & M COST SUMMARY

ITEM	HLND	LLND
Maintenance & Materials	757	1303
Labor	1417	1362
Chemicals	198	527
Power	2653	3960
SUBTOTAL	5025	7152
TOTAL ANNUAL COST(1)	7764	11864

NOTES:
(1) Total annual cost is O & M cost and annualized capital using 0.1085 capital recovery factor at 8.875 % interest rate.

APPENDIX D-4

BALTIMORE PATAPSCO
WASTEWATER TREATMENT PLANT

TABLE OF CONTENTS

SECTION	PAGE
1.0 Description of Existing Facilities	1
2.0 Proposed Plant Modifications	6
3.0 Proposed Retrofiting for Biological Nutrient Removal	6
4.0 Total Cost Summary	15

APPENDIX D-4

BALTIMORE PATAPSCO WASTEWATER TREATMENT PLANT

1.0 DESCRIPTION OF EXISTING FACILITIES

The existing Patapsco Wastewater Treatment Plant is a secondary treatment facility design to treat flow up to 70 MGD. The treatment facility consists of mechanically cleaned bar screens and grit removal facility as pretreatment; primary sedimentation, aeration secondary sedimentation as secondary treatment; chlorination as final liquid treatment before its discharge to Patapsco River.

The aeration basin has a pure oxygen unox generation process for the supply of air. Sludge from primary and secondary clarifiers are blended and polymer is added to it before it goes through the filter, plate and frame presses and then is later incinerated.

Figure D.4.1 is a schematic of the existing plant showing the main wet processes and sludge treatment and handling facilities. Figure D.4.2 and D.4.3 are the proposed flow diagrams to meet the High Level Nutrient Discharge (HLND) and Low Level Nutrient Discharge (LLND) limits. Plant loadings and effluent characteristics are shown in Table D.4.1. As can be seen the facility achieves excellent BOD, TSS and phosphorus removal. Presently, the facility does not have any effluent nitrogen limitations.

Major plant conponent and unit size are:

Bar screens and grit removal

Primary settling tanks:	3 @ 69 ft W x 195 ft L x 12.75 ft D, 17.5 MG, 9.71 ft SWD.
Activated sludge aeration basins:	4 cells, 4 reactors, each 71.5 ft W x 71.5 ft L x 12.5 ft SWD, 7.6 M gals.
Secondary clarifiers:	4, each 210 ft dia. x 16 ft SWD.
Gravity settling tanks:	65 ft dia. x 10 ft SWD.
Sludge Blending tanks:	2, 70 ft inside dia. x 60.5 ft D.
Air flotation thickners:	4, 41.8 ft L x 12 ft W x 13.11 ft D.

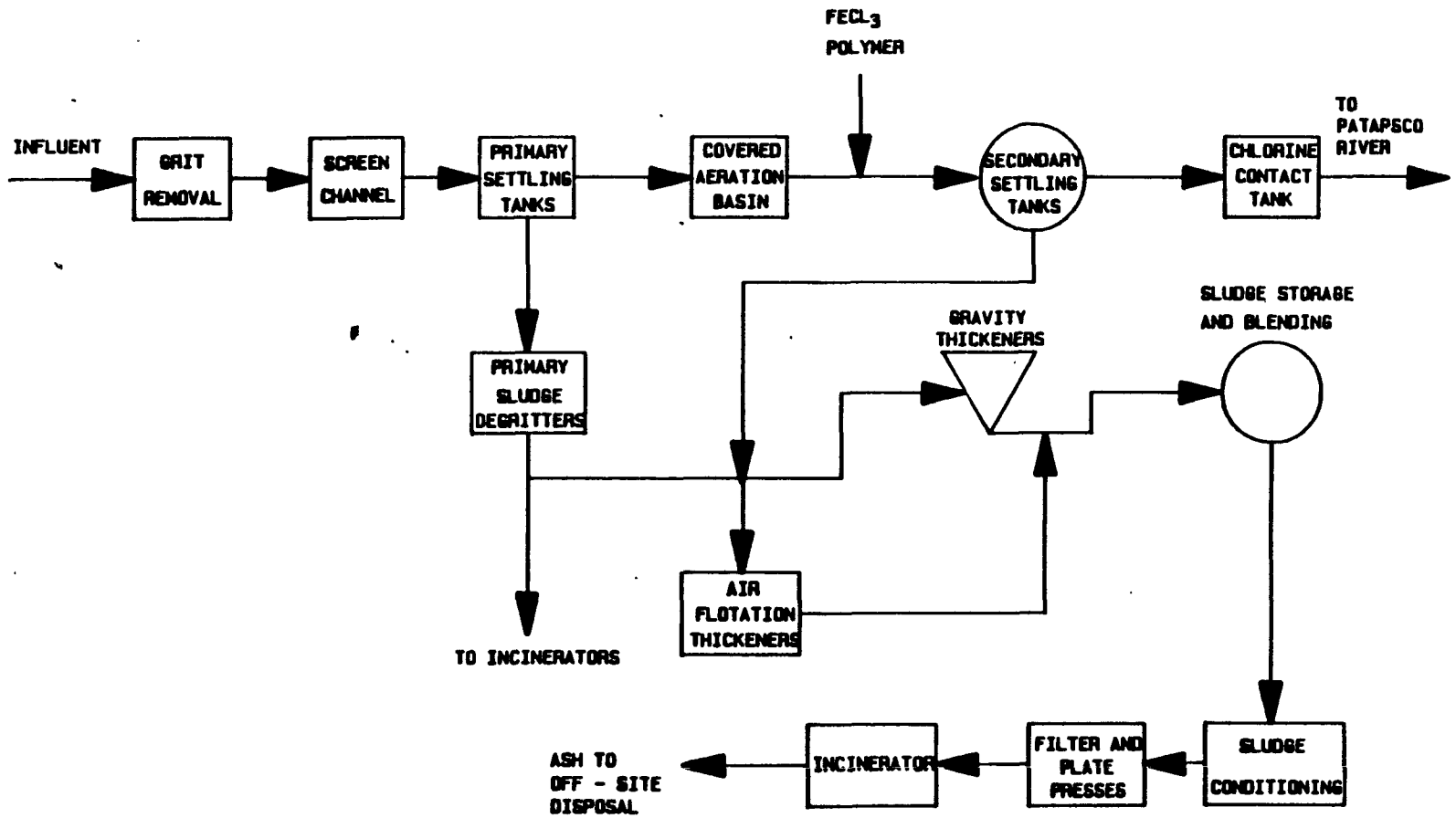

FIGURE D.4.1 EXISTING FLOW DIAGRAM
PATAPSCO WASTEWATER TREATMENT PLANT

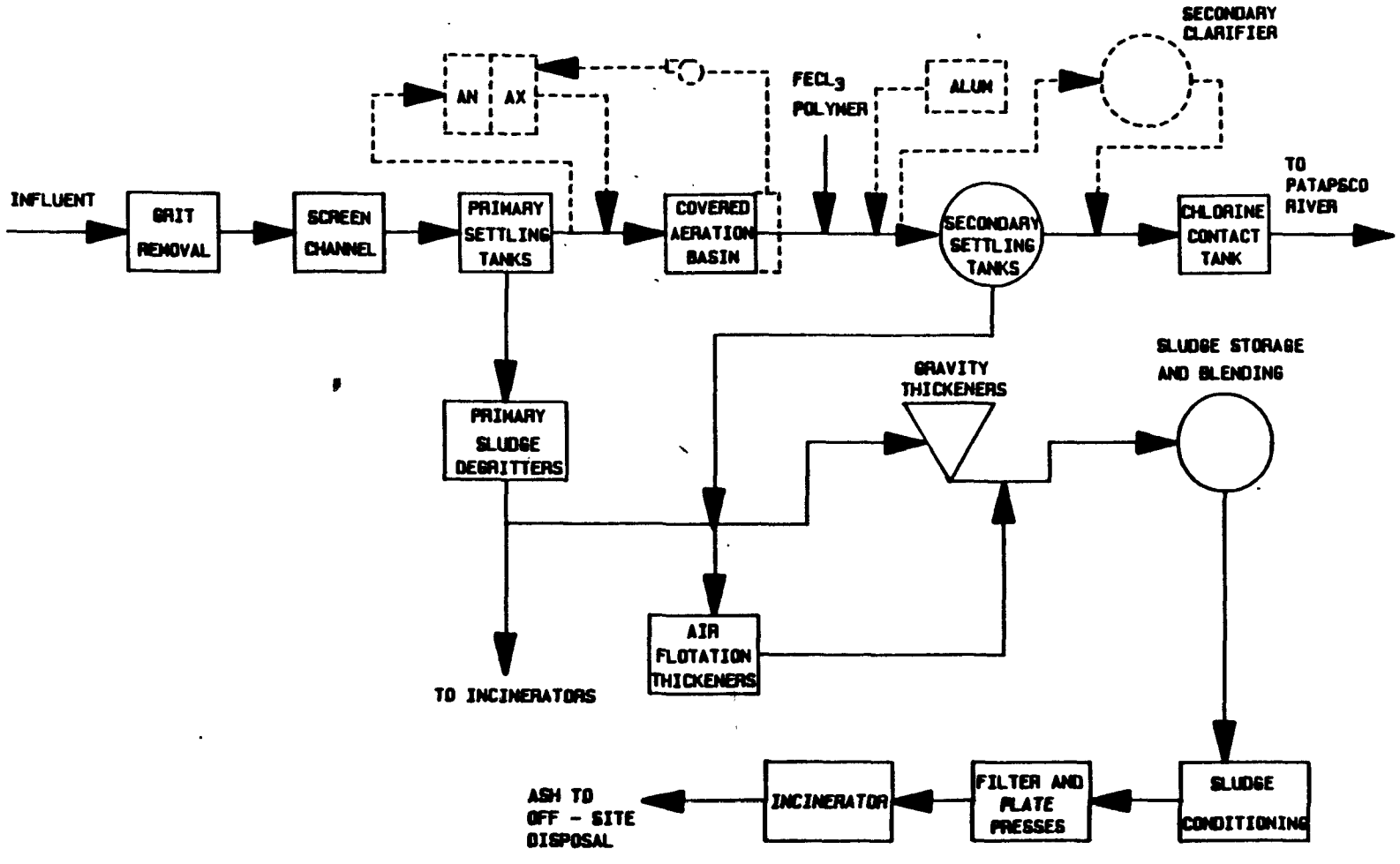

FIGURE D.4.2 PROPOSED FLOW DIAGRAM
PATAPSCO WASTEWATER TREATMENT PLANT (HLND)

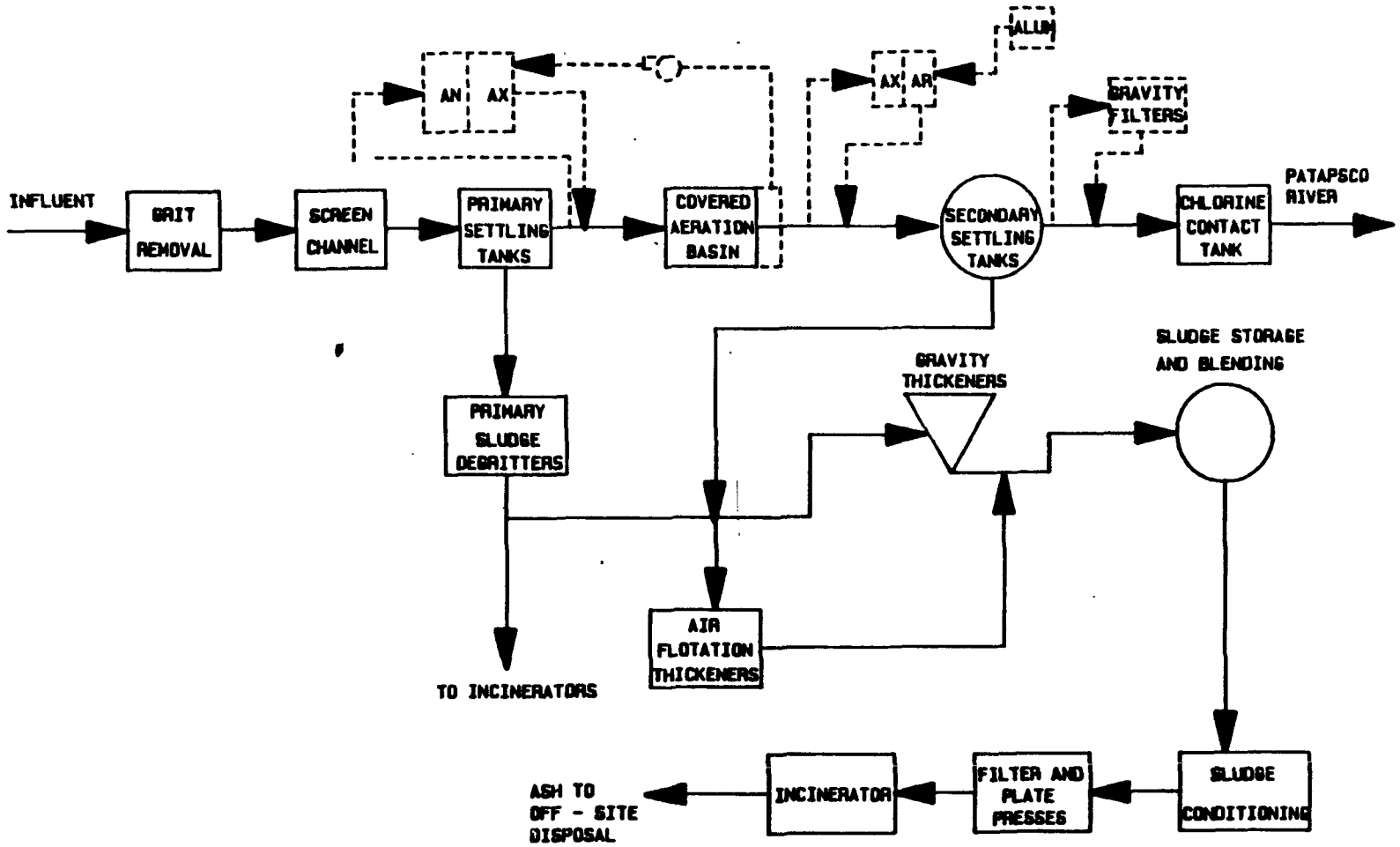

FIGURE D.4.3 PROPOSED FLOW DIAGRAM
PATAPSCO WASTEWATER TREATMENT PLANT (LLND)

TABLE D.4.1

PATAPSCO WWTP RAW SEWAGE
AND EFFLUENT CHARACTERISTICS

(JUNE, 1986 TO AUGUST, 1987 AVERAGE)

Parameter	Influent	Effluent	NPDES Permit
Flow, MGD	38.9	38.9	70
TSS, mg/l	288	25	30
BOD, mg/l	246	20	30
COD, mg/l	485	111	--
TP, mg/l	4.7*	2.2	2.0
TN, mg/l	N/A	15.3	--
pH	N/A	6.5	6.5
NH_4, mg/l	15.6*		

N/A = not available

* - September 1, 1987 to October 5, 1987

2.0 PROPOSED PLANT MODIFICATIONS

The plant is currently under expansion to increase its primary clarification capacity.

3.0 PROPOSED RETROFITTING

Modifications of the existing Patapsco WWTP to meet the HLND and LLND requirements would require the addition of anaerobic, anoxic and aerobic (covered tankage for pure oxygen unox process) as per the design criteria for A_2O and the Bardenpho process. The plant does not have any tertiary filters and thus additional clarifiers will have to be built to achieve an overflow rate of 400 gpd/sq ft. Chemical addition system will be built for phosphorus reduction. The BNR retrofit for both the levels of treatment is presented as follows.

HIGH LEVEL NUTRIENT DISCHARGE (TP = 2 mg/l; TN = 8 mg/l)

INCREMENTAL CONSTRUCTION COST

TANKAGE REQUIREMENT SUMMARY FOR HLND RETROFIT

	Tankage Required 1000 cu.ft.	Req'mts Met by Exist. Tk 1000 cu.ft.	Addl'n Tkg. Reqd.	Surf. Area Reqd. sq. ft.	Land Area Available sq. ft.
Anaerobic(1Hr.)	390	0	390	26050	
Anoxic(1Hr.)	390	0	390	26050	
Aerobic(4Hr.) *	1560	1022	538	35912	
Total	2340	1022	1318	88012	

* Based on pure oxygen unox process

TANKAGE REQUIREMENTS:(16" WALL, 14" BASE SLAB AND 8" BAFFLES)

	Anaerobic Tankage	Anoxic Tankage	Aerobic Tankage
No. of Tanks	1	1	2
No. of passes/tank	4	4	4
Length per pass (ft)	81	81	67
Width per pass (ft)	81	81	67
Depth per pass (ft)	17	17	17
Total volume (cu.ft.)	442849	442849	610504
No. of baffles/tank	3	3	3

MIXER REQUIREMENTS:

	Anaerobic Tankage	Anoxic Tankage
Volume of tanks (MG)	3.31	3.31
H.P. required (@ 50 HP/MG)	166	166
No. of Mixers (10 HP/mixer)	17	17
No. of standby mixers	3	3
Total no. of mixers	20	20
No. of mixers existing	0	0
No. of mixers required	20	20

AERATION REQUIREMENTS (Appendix C-8)

Plant design flowrate (MG)	70.00
Plant Influent BOD (mg/l)	246.00
Aeration Influent BOD (mg/l)	202.00
Plant Effluent BOD (mg/l)	20.00
BOD loading (mg/l)	182
Ammonia loading (mg/l)	16
Oxygen required (lbs/MG)	2283
Total oxygen required (lb/day)	159844
Existing capacity (lbs/day)	320000
Additional Oxygen required	0

CLARIFIERS REQUIREMENT:

To get over flow rate of 400 gpd/sq.ft:	
Surface area required:	175000 sq.ft.
Existing surface area available:	138544 sq.ft.
Additional surface area required:	36456 sq.ft.

No. of clarifier	3
Channels/tank	n/a
Diameter	125 ft.
Length	n/a
Width	n/a
Depth	14 ft.

PUMPING REQUIREMENT:

	Existing Capacity		Additional Capacity Required	
	(mgd)	(gpm)	(mgd)	(gpm)
ARCY PUMPS @ 200%Q	0	0	140	97222
RAS PUMPS @ 75%Q	29	19792	24	16667

COST CALCULATIONS:

TANKAGE CONCRETE COST:

	Anaerobic Tankage	Anoxic Tankage	Aerobic Tankage
Concrete volumes:			
sidewalls (cu.yd.)	135	135	112
endwalls (cu.yd.)	542	542	450
base slab (cu.yd.)	1196	1196	834
top cover (cu.yd.)	0	0	834
Concrete vol./tank (cu.yd.)	1873	1873	2230
Vol. of baffles (cu.yd.)	102	102	84
Concrete Cost per tank (@ $342.50/cu.yd. for concrete; $300.00/cu.yd. for baffles)	672103	672103	788975
Total concrete cost ($)	672103	672103	1577950
Total concrete cost for additional tankage ($).	2922155		

MIXER COST:

	Anaerobic Tankage	Anoxic Tankage
Cost of mixers ($) (@ $12,000 per mixer)	240000	240000
Installation cost ($) (@ 20% of mixer cost)	48000	48000
Installed mixer cost ($)	288000	288000
Total installed mixer cost ($)		576000

PUMP COST: (ARCY, RAS AND PUMP BUILDING)	No. of Pumps	Unit Cost($)	Total Cost($)
ARCY PUMP:			
24,500 gpm pumps each	6	55000	330000
RAS PUMP:			
14,350 gpm pump each	2	44000	88000
Subtotal	8		418000
Installation(20%)			83600
Subtotal			501600
Pump building(40' x 40') @ ($40/sq.ft.)			64000
Total Cost ($)			565600

CLARIFIER TANKAGE CONCRETE COST:

Concrete volumes:		
sidewalls (cu.yd.)	1242	
endwalls (cu.yd.)	N/A	
base slab (cu. yd.)	1695	
Concrete volume (cu.yd.)	2937	
Concrete Cost (@ $342.50/cu.yd. for concrete:		1005923
Equipment cost @ 40%		402369
Installation @ 20%		201185
Total cost for clarifiers ($)		1609476

AERATOR COST

	QTY.	H.P.	COST EACH($)	CONTROL PKG.($)	TOTAL COST($)
Surface aerator	7.00	50	20000	0	140000
Installation @ 20%					28000
Total installed cost ($)					168000

ANAEROBIC DIGESTION SUPERNATANT SYSTEM COST:

Total cost ($) (Appendix C-15)	271441

ALUM FEED SYSTEM COST:

Total cost ($) (Appendix C-17)	168000

TOTAL EQUIPMENT COST ($): 6280000

INCREMENTAL O & M COST SUMMARY:

Maintenance and materials cost: (3% of total construction)	473586
Labor cost:(current plant budget = $5,806,964) 25% of existing budget is labor cost	1451741
Chemicals: Includes Lime & Alum addition	256317

Power:

	HP	kW	kWHr/ YEAR	Cost @ $0.07/kWHr.
Mixers	331	248	2116998	148190
Pumps:				
ARCY	900	673	5751821	402627
RAS	300	224	1917274	134209
Aerators:	350	262	2236819	156577
Total power cost ($):				841604

TOTAL O & M COST: 3023248

LOW LEVEL NUTRIENT DISCHARGE (TP = 0.5 mg/l; TN = 3 mg/l)

INCREMENTAL CONSTRUCTION COST

TANKAGE REQUIREMENT SUMMARY FOR LLND RETROFIT

	Tankage Required 1000cu.ft.	Req'mts Met by Exist Tkg 1000cu.ft	Addl'n Tkg. Reqd. 1000cu.ft.	Surf. Area Reqd. sq.ft.	Land Area Available sq.ft.
Anaerobic(2Hr)	780	0	780	52100	
1st Anoxic(3Hr)	1170	0	1170	78150	
Aerobic(7Hr) *	2729	1022	1707	115600	
2nd Anoxic(3Hr)	1170	0	1170	78150	
Rearation(1Hr)	390	0	390	26050	
Total	6239	1022	5217	350050	

* Based on a pure oxygen unox process

TANKAGE REQUIREMENTS:(16" WALL, 14" BASE SLAB AND 8" BAFFLES)

	Anaerobic Tankage	1st Anoxic Tankage	Aerobic Tankage	2nd Anoxic Tankage	Reaeration Tankage
No. of Tanks	2	3	4	3	1
No. of passes/tank	4	4	4	4	4
Length per pass (ft.)	81	81	85	81	81
Width per pass (ft.)	81	81	85	81	81
Depth per pass (ft.)	17	17	17	17	17
Total volume (cu.ft.)	885699	1328548	1965200	1328548	442849
No. of baffles/tank	3	3	3	3	3

MIXER REQUIREMENTS:

	Anaerobic Tankage	1st Anoxic Tankage	2nd Anoxic Tankage
Volume of tanks (MG)	6.63	9.94	9.94
H.P. required (@ 50 HP/MG)	331	497	497
No. of Mixers (10 HP/mixer)	33	50	50
No. of standby mixers	7	10	10
Total no. of mixers	40	60	60
No. of mixers existing	0	0	0
No. of mixers required	40	60	60

AERATION REQUIREMENTS (Appendix C-8)

Plant design flowrate (MG)	70
Plant Influent BOD (mg/l)	246
Aeration Influent BOD (mg/l)	202
Plant Effluent BOD (mg/l)	20
BOD loading (mg/l)	182
Ammonia loading (mg/l)	16
Oxygen required (lbs/MG)	2587
Total oxygen required (lbs/day)	181095
Existing capacity (lbs/day)	320000
Additional oxygen required	0
Additional air required (SCFM) *	11730

* For final reaeration.

CLARIFIERS REQUIREMENT:

To get over flow rate of 400 gpd/sq.ft:	
Surface area required:	175000 sq.ft.
Existing surface area available:	138544 sq.ft.
Additional surface area required:	36456 sq.ft.

No. of clarifier	3
Channels/tank	n/a
Diameter	125 ft.
Length	n/a
Width	n/a
Depth	14 ft.

PUMPING REQUIREMENT:

	Existing capacity (MG)		Additional capacity Required	
	(mgd)	(gpm)	(mgd)	(gpm)
ARCY PUMPS @ 400%	0	0	280	194443
RAS PUMPS @ 100% Q	29	19792	42	28819

COST CALCULATIONS:

TANKAGE CONCRETE COST:

	Anaerobic Tankage	1st Anoxic Tankage	Aerobic Tankage	2nd Anoxic Tankage	Reaeration Tankage
Concrete volumes:					
sidewalls (cu.yd.)	135	135	143	135	135
endwalls (cu.yd.)	542	542	571	542	542
base slab (cu.yd.)	1196	1196	1323	1196	1196
top cover (cu.yd.)	0	0	1323	0	0
Concrete vol./tank (cu.yd.)	1873	1873	3360	1873	1873
Vol. of baffles (cu.yd.)	102	102	107	102	102
Concrete Cost per tank (@ $342.50/cu.yd. for concrete; $300.00/cu.yd. for baffles)	672103	672103	1182900	672103	672103
Total concrete cost ($)	1344205	2016308	4731600	2016308	672103
Total concrete cost for additional tankage ($).					10780523

MIXER COST:

	Anaerobic Tankage	1st Anoxic Tankage	2 nd Anoxic Tankage
Cost of mixers ($) (@ $12,000 per mixer)	480000	720000	720000
Installation cost ($) (@ 20% of mixer cost)	96000	144000	144000
Installed mixer cost ($)	576000	864000	864000
Total installed mixer cost ($)			2304000

PUMP COST: (ARCY, RAS AND PUMP BUILDING)

	No. of Pumps	Unit Cost($)	Total Cost($)
ARCY PUMP:			
72,000 gpm pump each	4	100000	400000
RAS PUMP:			
14,350 gpm pump each	3	44000	132000
Subtotal	7		532000
Installation(20%)			106400
Subtotal			638400
Pump building(40' x 60') (@ $40/sq. ft.)			48000
Total Cost ($)			686400

CLARIFIER TANKAGE CONCRETE COST:

Concrete volumes:	
sidewalls (cu.yd.)	1242
endwalls (cu.yd.)	0
base slab (cu. yd.)	1695
Concrete volume (cu.yd.)	2937
Concrete Cost (@ $342.50/cu.yd. for concrete;	1005923
Equipment cost @ 40%	402369
Installation @ 20%	201185
Total cost for clarifiers ($)	1609476

BLOWERS, DIFFUSERS, & AERATORS COST

	QTY.	SCFM	COST EACH($)	CONTROL PKG.($)	TOTAL COST($)
Blowers	4	3000	24000	0	96000
Installation @ 20%					19200
DIFFUSERS @ $30 per SCFM					360000
AERATORS	18	50 H.P.	20000	0	360000
Installation @ 20%					72000
Total installed cost ($)					907200

ANAEROBIC DIGESTION SUPERNATANT SYSTEM COST

Total cost ($) (Appendix C-15)	271441

ALUM FEED SYSTEM COST

Total cost ($) (Appendix C-17)	193667

TOTAL EQUIPMENT COST ($): 16751666

INCREMENTAL O & M COST SUMMARY:

Maintenance and materials cost (3% of total construction)	$	1258282
Labor cost:(current plant budget = $5,806,964) 25% of existing budget is labor cost	$	1451741
Chemicals: Includes Lime & Alum addition	$	682617

Power:

	HP	kW	kWHr/ YEAR	Cost @ $0.07/kWHr.
Mixers	1325	991	8467991	592759
Pumps:				
ARCY	600	449	3834547	268418
RAS	1200	898	7669094	536837
Blowers/Aerators:	1500	1122	9586368	671046
Total Power Cost ($):				2069060

TOTAL O & M COST ($): 5461700

TOTAL COST SUMMARY

INCREMENTAL CONSTRUCTION COST SUMMARY FOR PATAPSCO WWTP, X $1000

COST ITEM		HLND	LLND
Tankage requirements	$	2922	10781
Mixers	$	576	2304
Clarifiers	$	1609	1609
Pumps-ARCY, RAS, Bldg. for pumps	$	566	686
Alum Feed	$	168	194
Supernatant System	$	271	271
Blowers, Diffusers, & Aerators	$	168	907
Eff. Filter-Pumps, Structure, Media	$	0	0
SUBTOTAL		6280	16752
Non Component Cost (1)		3885	10257
TOTAL CONSTRUCTION		10165	27008
Eng. & Const. Supervision(19%) (2)		1931	5132
SUBTOTAL		12097	32140
Contingencies(20%)		2419	6428
Interest during construction(1/2PCI)		1270	3375
TOTAL CAPITAL COST		15786	41943

NOTES:
(1) Non-Component cost includes electrical, instrumentation, yard piping, site preparation & misc. work, and retrofit-construction added cost.
(2) Engineering(10%), construction supervision(9%).

INCREMENTAL O & M COST SUMMARY

ITEM	HLND	LLND
Maintenance & Materials	474	1258
Labor	1452	1452
Chemicals	256	683
Power	842	2069
SUBTOTAL	3024	5462
TOTAL ANNUAL COST(1)	4737	10013

NOTES:
(1) Total annual cost is O & M cost and annualized capital using 0.1085 capital recovery factor at 8.875 % interest rate.

APPENDIX D-5

ALEXANDRIA POLLUTION CONTROL PLANT

TABLE OF CONTENTS

SECTION	PAGE
1.0 Description of Existing Facilities	1
2.0 Proposed Plant Modifications	9
3.0 Proposed Retrofiting for Biological Nutrient Removal	9
4.0 Total Cost Summary	16

APPENDIX D-5

ALEXANDRIA SANITATION AUTHORITY WWTP

1.0 DESCRIPTION OF EXISTING FACILITIES

The existing Alexandria WWTP was built in 1975-1984 as a biological/physical-chemical plant designed to treat 54 MGD of flow. The plant is designed with chemical addition (alum or ferric) to the primary clarifiers for suspended solids and BOD_5 removal. Secondary treatment is accomplished with rotating biological contactors and intermediate clarifiers. Carbon towers are installed but not in use following the intermediate clarifiers. Intermediate clarifier effluent has alum added before flowing through secondary settling tanks for phosphorous removal. Final setting tank effluent is then filtered with dual media filters, chlorinated and then aerated before discharge to Hunting Creek.

Sludge from the primary, intermediate and secondary settling tanks is pumped to gravity thickeners where it is thickened to 4.5 - 5% solids. Thickened sludge is anerobically digested, dewatered with centrifuges and hauled to the EPA composting operation at a nearby landfill. Composted sludge is mixed with lime and held for two (2) hours and then hauled as agricultural land application.

Figure D.5.1 is a schematic of the existing plant showing the main wet process units. Figure D.5.2 is a layout of the Alexandria plant site. Figure D.5.3 and D.2.4 are the proposed flow diagram for HLND and LLND targets. As can be seen, the present treatment plant site is confined on all four sides. To the north lies a cemetery, to the west and east are developed areas, while to the south is the I-495 Beltway. Land area available for plant expansion and/or modifications are limited to the area just south of the mixed media filters and the area beneath the Virginia Electric Power Company's (VEPCO) high voltage power lines.

The 1986 average annual plant loadings and effluent quality are shown in Table D.5.1. As can be seen the facility achieves excellent BOD_5, TSS and Phosphorus removal, but no nitrogen removal.

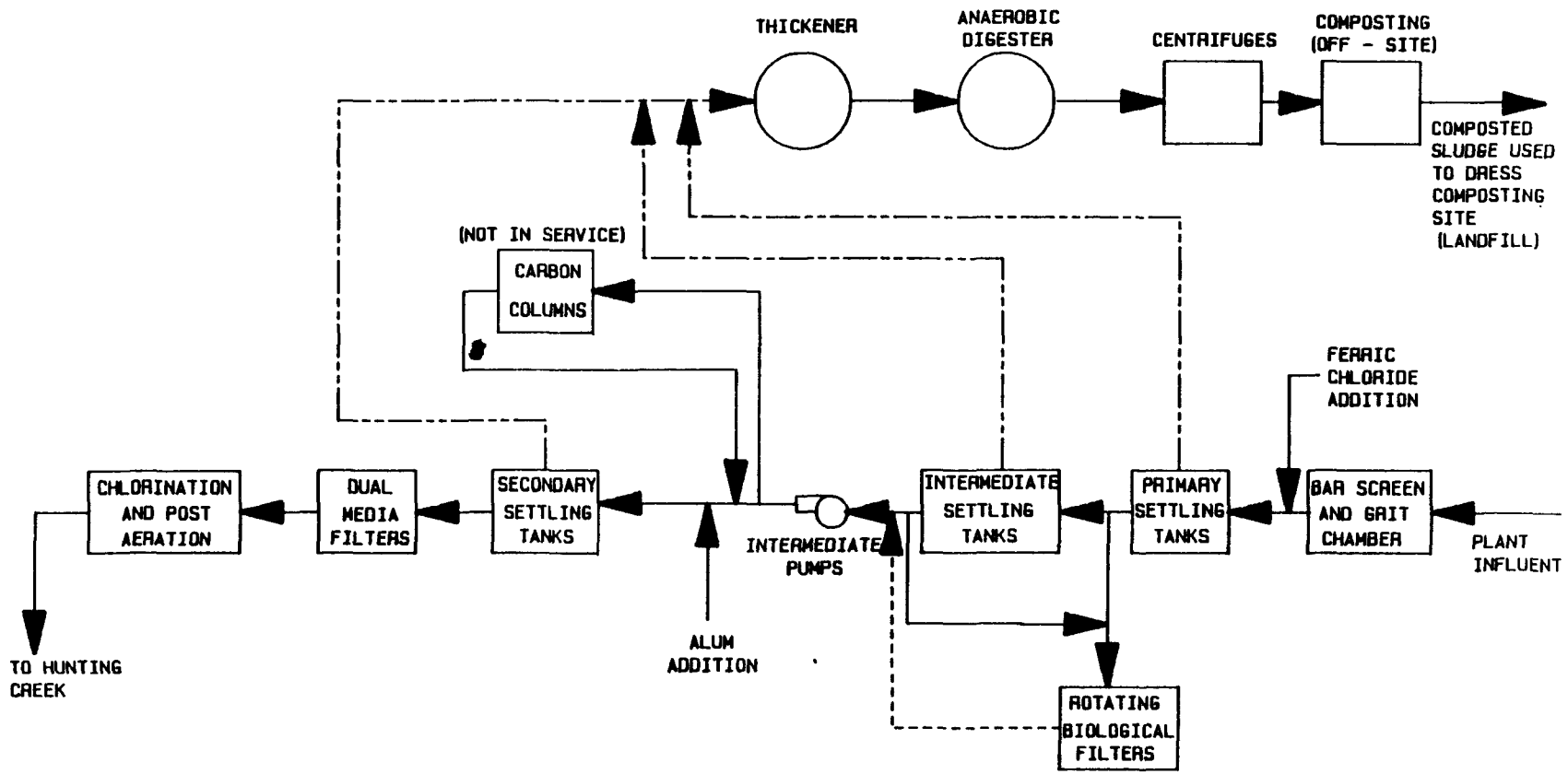

FIGURE D.5.1 EXISTING FLOW DIAGRAM
ALEXANDRIA SANITATION AUTHORITY
WASTEWATER TREATMENT PLANT

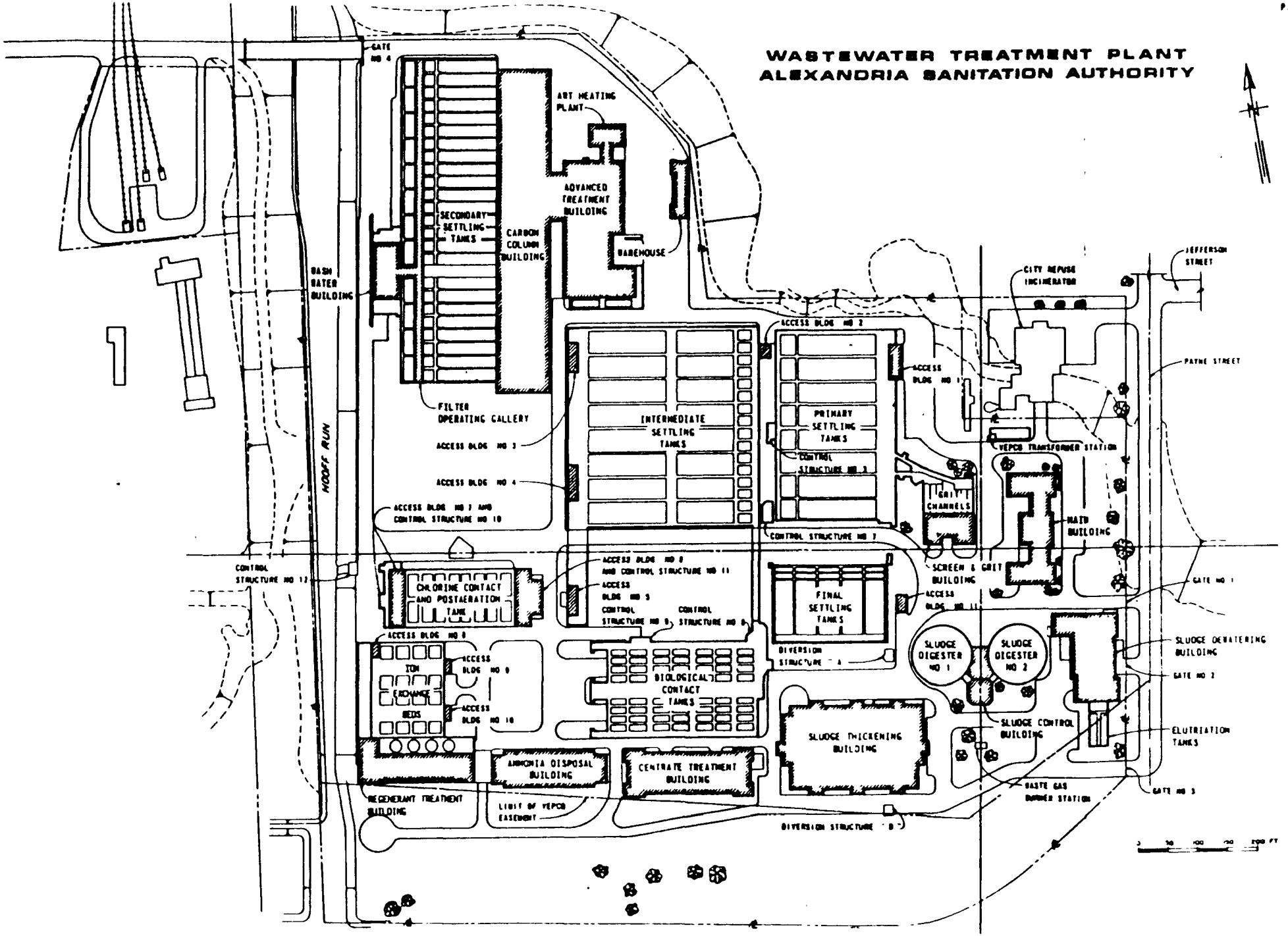
WASTEWATER TREATMENT PLANT
ALEXANDRIA SANITATION AUTHORITY
GATE NO 4
ART HEATING PLANT
ADVANCED TREATMENT BUILDING
SECONDARY SETTLING TANKS
CARBON COLUMN BUILDING
WAREHOUSE
WASH WATER BUILDING
HOOFF RUN
FILTER OPERATING GALLERY
ACCESS BLDG NO 3
ACCESS BLDG NO 4
ACCESS BLDG NO 7 AND CONTROL STRUCTURE NO 10
INTERMEDIATE SETTLING TANKS
ACCESS BLDG NO 2
PRIMARY SETTLING TANKS
CONTROL STRUCTURE NO 3
ACCESS BLDG NO 1
CITY REFUSE INCINERATOR
JEFFERSON STREET
PAYNE STREET
VEPCO TRANSFORMER STATION
GRIT CHANNELS
MAIN BUILDING
CONTROL STRUCTURE NO 7
SCREEN & GRIT BUILDING
CONTROL STRUCTURE NO 12
CHLORINE CONTACT AND POSTAERATION TANK
ACCESS BLDG NO 8 AND CONTROL STRUCTURE NO 11
ACCESS BLDG NO 5
CONTROL STRUCTURE NO 9
CONTROL STRUCTURE NO 6
FINAL SETTLING TANKS
ACCESS BLDG NO 11
GATE NO 1
ACCESS BLDG NO 8
ION EXCHANGE BEDS
ACCESS BLDG NO 9
ACCESS BLDG NO 10
BIOLOGICAL CONTACT TANKS
DIVERSION STRUCTURE "A"
SLUDGE DIGESTER NO 1
SLUDGE DIGESTER NO 2
SLUDGE DEWATERING BUILDING
GATE NO 2
SLUDGE THICKENING BUILDING
SLUDGE CONTROL BUILDING
ELUTRIATION TANKS
AMMONIA DISPOSAL BUILDING
CENTRATE TREATMENT BUILDING
WASTE GAS BURNER STATION
GATE NO 3
REGENERANT TREATMENT BUILDING
LIMIT OF VEPCO EASEMENT
DIVERSION STRUCTURE "B"
N

Figure D.5.2

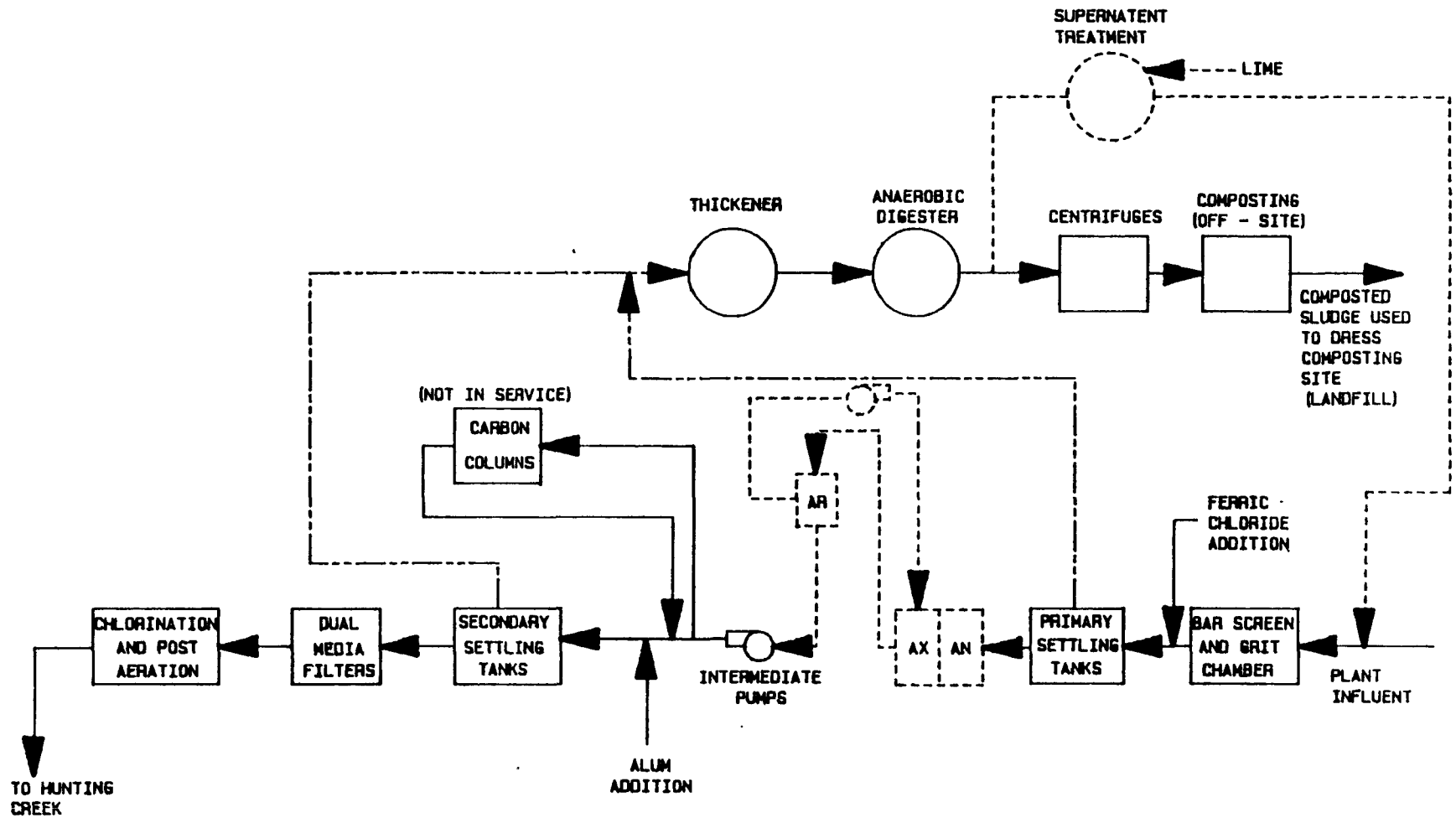

FIGURE D.5.3 PROPOSED FLOW DIAGRAM
ALEXANDRIA SANITATION AUTHORITY
WASTEWATER TREATMENT PLANT (HLND)

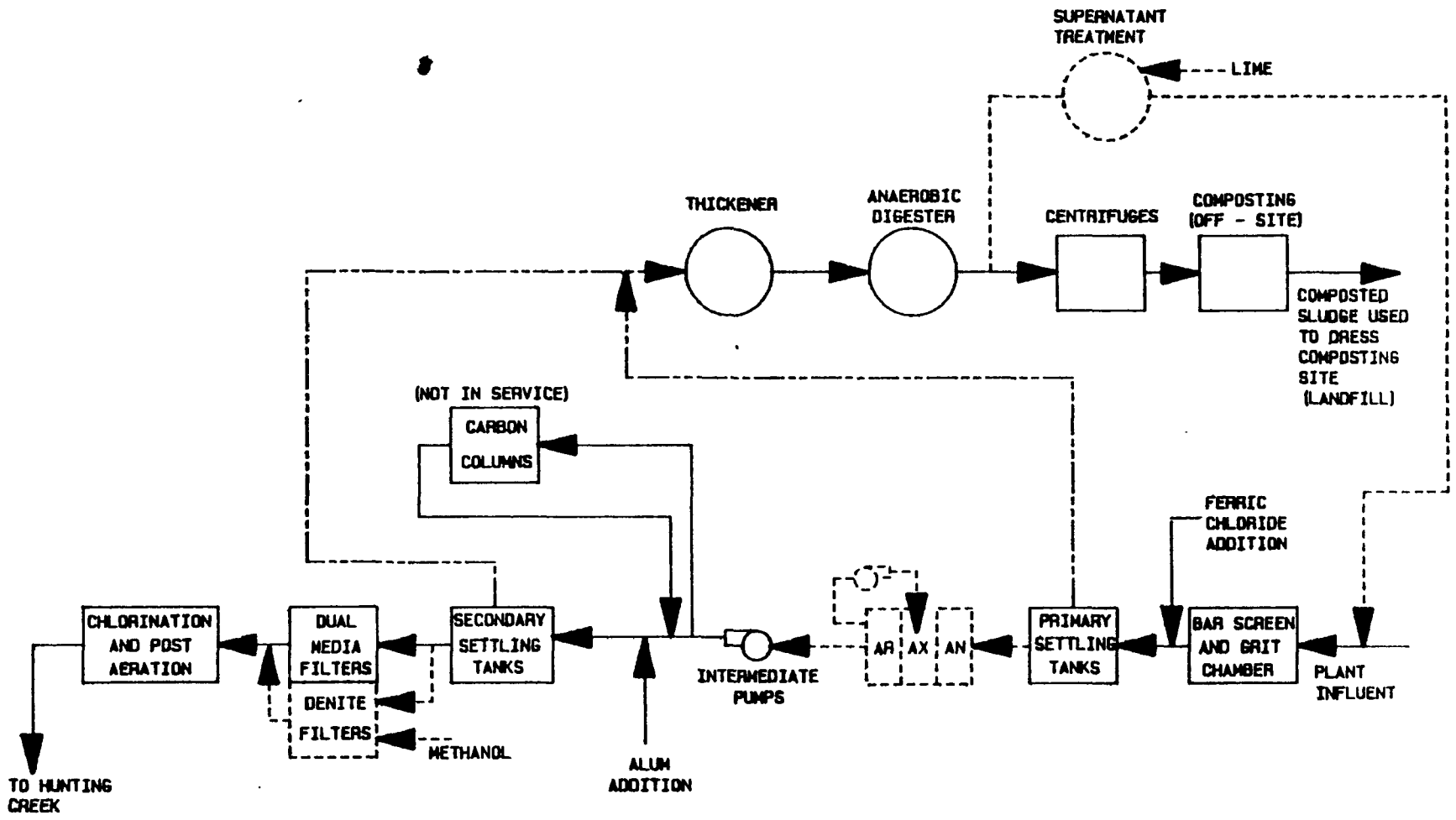

FIGURE D.5.4 PROPOSED FLOW DIAGRAM
ALEXANDRIA SANITATION AUTHORITY
WASTEWATER TREATMENT PLANT (LLND)

TABLE D.5.1

ALEXANDRIA WWTP RAW SEWAGE CHARACTERISTICS
AND EFFLUENT (1986 ANNUAL AVERAGE)

Parameter	Influent	Prim. Eff.	Effluent	NPDES PERMIT
BOD_5	152 mg/l	46 (30 soluble)	12	18 13 (summer)
TSS	165 mg/l	NA	2	13
Total P	5.5 mg/l	NA	0.06	0.18
TKN	>20 mg/l	NA	20.3	---
NH_3-N	NA	NA	19.3	---
FLOW	35 MGD	NA	---	54

NA = Not Available

Major plant unit size and design criteria are as follows:

Raw Sewage Pumps	
Capacity (mgd)	156
TDH (ft)	42
Primary Clarifiers	
Total Area (sqft)	49,760
Total Volume (cuft)	448,000
Design overflow rate (gpd/sqft)	1,080
Design detention time (hr)	1.5
Design BOD_5 removal (with alum)-%	65
Rotating biological Contractors - (56 units)	
Total disc surface area (sqft)	5,348,000
Design loading (gpd/sqft)	10.0
Design BOD_5 removal (%)	63
Design tank volume (cuft) (approx. 15,000 gal/disc)	112,000
Tank dimensions (approx.)	25' wide 14' long 7' deep
Intermediate Settling Tanks	
Total area (sqft)	92,800
Length (ft)	145
Width (ft)	80
Sidewater depth (ft)	11
Total volume (cuft)	1,020,000
Intermediate Pumps	
Capacity (mgd)	120
TDH (ft)	52
Secondary Settling Tanks	
Total area (sqft)	59,800
Length (ft)	40
Width (ft)	40
Sidewater depth (ft)	11
Total volume (cuft)	657,800
Design overflow rate (gpd/sqft)	800
Dual Media Filters	
Design loading rate (gpm/sqft	3.9
Phosphorous removal (%)	60
Influent phosphorous (mg/l)	0.5
Effluent phosphorous (mg/l)	0.2

Gravity Thickening Tanks for Primary
Intermediate Clarifier Sludge (2 each)

Total surface area (sqft)	6,400
SWD (ft)	10
Total volume (cuft)	85,600
Tank diameter (ft)	45
Design loading rate:	
Total flow both sludges (mgd)	5.08
Overflow rate (gpd/sqft) (1)	800
Total solids (lbs/day)	93,000
% solids	8
Design thickened sludge volume (gal)	138,000

(1) includes 0.64 MGD plant effluent

Gravity Thickening Tanks for Final Clarifier Sludge, (2 each)

Total surface area (sqft)	4,760
SWD (ft)	10
Total volume (cuft)	63,900
Tank diameter (ft)	55
Design loading rate:	
Sludge flow (mgd)	0.80
Overflow rate (gpd/sqft) (2)	400
Solids loading (lbs/day)	6,200
Thickened solids conc. (%)	2
Thickened sludge volume (gpd)	124,000

(2) Including additional 765 gpm of plant effluent

Sludge Digestion Tanks
(2 each)

Diameter (ft)	75
SWD (ft)	27.75
Total volume (cuft)	450,000
% VSS destruction (%)	57

Original Final Settling Tanks
(Estimated size)
200 ft x 130 ft x 11 ft deep

Volume (cuft)	286,000

Post Aeration
(mechanical aerators)
Installed units (8 each)

Total capacity (lbs O_2/day)	26,000
Firm capacity (lbs/day)	22,800

2.0 PROPOSED PLANT MODIFICATIONS

The Alexandria plant was designed with provisions that future permit limits would require the plant to meet a 1.0 mg/l limit for unoxidized ammonia. Preliminary studies have been completed to size these units to meet a 2 mg/l NH_3-N effluent limit. Studies have also been conducted to determine disposition of plant sludge. The present use of composted sludge as a landfill cover is only temporary in nature. Due to odors from the composted sludge, agricultural disposal of the composted sludge is not feasible. Studies have been completed which have evaluated two sludge disposal options. These are:

(1) Installation of additional digester capacity and lime stabilization to further stabilize the sludge to eliminate odors from the composted sludge (present VSS destruction is less than 50% compared to a design value of 56%). This additional capacity would approximately double the existing digester volume.

(2) Installation of sludge pelletization equipment and disposal of the pelletized sludge agriculturally. Installation of pelletizing equipment would eliminate the need to install new digester capacity and a lime stabilization system.

3.0 PROPOSED RETROFITTING FOR BIOLOGICAL NUTRIENT REMOVAL

Modification of the existing Alexandria WWTP to meet LLND and HLND limits will require elimination of the existing biological rotating contractors and installation of activated sludge systems. In order to keep BOD_5/T-P ratios as high as possible, chemical addition to the primary clarifier will be eliminated and the intermediate clarifiers and rotating biological contactor (RBC) tanks will be converted into the required anaerobic, anoxic and aeration tanks.

The plant has existing tertiary filters and would thus require the addition of secondary clarifiers to obtain an overflow rate (OFR) of 600 gpd/sq. ft. Land area available for this and the blower and pump building can be accommodated within the plant.

For the LLND requirements, the entire land area available in addition to using the existing tankage does not accommodate the eighteen (18) hours detention time required by the Bardenpho Process.

However, the LLND targets can be accomplished by retrofitting the A_2O process (HLND) and converting the existing tertiary filters to deep-bed denitrification filters with facilities for methanol addition. The retrofit details for the two levels are presented in the following tables.

HIGH LEVEL NUTRIENT DISCHARGE (TP = 2 mg/l; TN = 8 mg/l)

INCREMENTAL CONSTRUCTION COST

TANKAGE REQUIREMENT SUMMARY FOR HLND RETROFIT

	Tankage Required 1000 cu.ft.	Req'mts Met by Exist. Tk 1000 cu.ft.	Addl'n Tkg. Reqd.	Surf. Area Reqd. sq. ft.	Land Area Available sq. ft.
Anaerobic(1Hr.)	301	301	0	0	
Anoxic(1Hr.)	301	301	0	0	
Aerobic(6Hr.)	1805	420	1385	96000	
Total	2407	1022	1385	96000	130691

TANKAGE REQUIREMENTS:(16" WALL, 14" BASE SLAB AND 8" BAFFLES)

	Anaerobic Tankage	Anoxic Tankage	Aerobic Tankage
No. of Tanks	0	0	4
No. of passes/tank	0	0	4
Length per pass (ft)	0	0	240
Width per pass (ft)	0	0	25
Depth per pass (ft)	0	0	15
Total volume (cu.ft.)	0	0	1440000
No. of baffles/tank	0	0	3

MIXER REQUIREMENTS:

	Anaerobic Tankage	Anoxic Tankage
Volume of tanks (MG)	2.25	2.25
H.P. required (@ 50 HP/MG)	113	113
No. of Mixers (10 HP/mixer)	11	11
No. of standby mixers	2	2
Total no. of mixers	14	14
No. of mixers existing	0	0
No. of mixers existing	14	14

AERATION REQUIREMENTS (Appendix C-8)

Plant design flowrate (MG)	54
Plant Influent BOD (mg/l)	152
Aeration Influent BOD (mg/l)	114
Plant Effluent BOD (mg/l)	12
BOD loading (mg/l)	102
Ammonia loading (mg/l)	19
Oxygen required (lbs/MG)	1665
Air required (SCFM)	60314
Air required (SCFM) (@ peaking factor of 2.2)	132691
Existing capacity (SCFM)	0
Additional air required (SCFM)	132691

CLARIFIERS REQUIREMENT:

To get over flow rate of 600 gpd/sq.ft:	
Surface area required:	90000 sq.ft.
Existing surface area available:	84000 sq.ft.
Additional surface area required:	6000 sq.ft.

No. of clarifier	1
Channels/tank	2
Diameter	n/a
Length	160
Width	19
Depth	11

PUMPING REQUIREMENT:

	Existing Capacity		Additional Capacity Required	
	(mgd)	(gpm)	(mgd)	(gpm)
ARCY PUMPS @ 200%Q	0	0	108	75000
RAS PUMPS @ 75%Q	3	2083	38	26042

COST CALCULATIONS:

TANKAGE CONCRETE COST:

	Anaerobic Tankage	Anoxic Tankage	Aerobic Tankage
Concrete volumes:			
sidewalls (cu.yd.)	0	0	356
endwalls (cu.yd.)	0	0	148
base slab (cu.yd.)	0	0	1096
Concrete vol./tank (cu.yd.)	0	0	1600
Vol. of baffles (cu.yd.)	0	0	267
Concrete Cost per tank (@ $342.50/cu.yd. for concrete; $300.00/cu.yd. for baffles)	0	0	628100
Total concrete cost ($)	0	0	2512400
Total concrete cost for additional tankage ($).	2512400		

MIXER COST:

	Anaerobic Tankage	Anoxic Tankage
Cost of mixers ($) (@ $12,000 per mixer)	168000	168000
Installation cost ($) (@ 20% of mixer cost)	33600	33600
Installed mixer cost ($)	201600	201600
Total installed mixer cost ($)		403200

PUMP COST: (ARCY, RAS AND PUMP BUILDING)	No. of Pumps	Unit Cost($)	Total Cost($)
ARCY PUMP:			
24,500 gpm pumps each	3	55000	165000
RAS PUMP:			
12,600 gpm pump each	4	44000	176000
Subtotal	7		341000
Installation(20%)			68200
Subtotal			409200
Pump building(30' x 40') @ ($40/sq.ft.)			48000
Total cost ($)			457200

CLARIFIER TANKAGE CONCRETE COST:

Concrete volumes:	
sidewalls (cu.yd.)	261
endwalls (cu.yd.)	41
base slab (cu. yd.)	263
Concrete volume (cu.yd.)	565
Concrete Cost (@ $342.50/cu.yd. for concrete;	193513
Equipment cost @ 40%	77405
Installation @ 20%	38703
Total cost for clarifiers	309620

BLOWERS & DIFFUSERS COST

	QTY.	SCFM	COST EACH($)	CONTROL PKG.($)	TOTAL COST($)
Blowers	7	20000	120000	2000	854000
Installation @ 20%					170800
Diffusers @ $30 per SCFM					4200000
Total installed cost ($)					5224800

ANAEROBIC DIGESTION SUPERNATANT SYSTEM COST:

Total cost ($) (Appendix C-15)	226351

ALUM FEED SYSTEM COST:

Total cost ($) (Appendix C-17)	129600

MISCELLANEOUS COSTS:

Intermediate lift station + Foundation,piles etc. ($)	5248000

TOTAL EQUIPMENT COST ($): 14511000

INCREMENTAL O & M COST SUMMARY:

Maintenance and materials cost: (3% of total construction)	1085354
Labor cost:(current plant budget = $4,645,400) 25% of existing budget is labor cost.	1161350
Chemicals: Includes Lime & Alum addition	197730

Power:

	HP	kW	kWHr/ YEAR	Cost @ $0.07/kWHr.
Mixers	225	168	1437955	100657
Pumps:				
ARCY	450	337	2875910	201314
RAS	600	449	3834547	268418
Blowers:	6300	4712	40262746	2818392
Total power cost ($):				3388781

TOTAL O & M COST ($): 5833215

LOW LEVEL NUTRIENT DISCHARGE (TP = 0.5 mg/l; TN = 3 mg/l)

INCREMENTAL CONSTRUCTION COST

TANKAGE REQUIREMENT SUMMARY FOR LLND RETROFIT

	Tankage Required 1000cu.ft.	Req'mts Met by Exist Tkg 1000cu.ft	Addl'n Tkg. Reqd. 1000cu.ft.	Surf. Area Reqd. sq.ft.	Land Area Available sq.ft.
Anaerobic(2Hr)	602	602	0	--	
1st Anoxic(3Hr)	902	420	482	--	
Aerobic(9Hr)	2707	0	2707	--	
2nd Anoxic(3Hr)	902	0	902	--	
Rearation(1Hr)	301	0	301	--	
Total	5414	1022	4392	292800 *	130691

* Based on an average tank depth of 15 ft.

From the above table it is determined that due to the shortage of land availability it will not be feasible to retrofit the 5 stage Bardenpho process to meet the LLND limits.

Alternatively the LLND limits can be achieved by retrofiting the 3 stage A2O process with alum addition and converting the existing filters to deep bed denitrification filters with methanol addition facilities.

Total equipment cost for HLND ($)	14511000
Equipment cost for Denitrification Filters ($)	4160000 *
TOTAL EQUIPMENT COST ($):	18671000

* NOTE: The cost provided for the denitrification filters is not site specific but based on a generic retrofit.

TOTAL COST SUMMARY

INCREMENTAL CONSTRUCTION COST SUMMARY FOR ALEXANDRIA WWTP, X $1000

COST ITEM		HLND	LLND
Tankage requirements	$	2512	2512
Mixers	$	403	403
Clarifiers	$	310	310
Pumps-ARCY, RAS, Bldg. for pumps	$	457	457
Alum Feed	$	130	130
Supernatant System	$	226	226
Blowers & Duffusers	$	5225	5225
Eff. Filter-Pumps, Structure, Media	$	-	4160
Miscelleneous Costs	$	5248	5248
SUBTOTAL		14511	18671
Non Component Cost (1)		8786	15026
TOTAL CONSTRUCTION		23297	33697
Eng. & Const. Supervision(19%) (2)		4426	6402
SUBTOTAL		27723	40099
Contingencies(20%)		5545	8020
Interest during construction(1/2PCI)		2911	4210
TOTAL CAPITAL COST		36178	52329 (3)

NOTES:
(1) Non-Component cost includes electrical, instrumentation, yard piping, site preparation & misc. work, and retrofit-construction added cost.
(2) Engineering(10%), construction supervision(9%).
(3) This cost is not based on a site specific evaluation.

INCREMENTAL O & M COST SUMMARY

ITEM	HLND	LLND
Maintenance & Materials	1085	1570
Labor	1161	1161
Chemicals	198	907
Power	3389	3412
SUBTOTAL	5833	7050
TOTAL ANNUAL COST(1)	9758	12728

NOTES:
(1) Total annual cost is O & M cost and annualized capital using 0.1085 capital recovery factor at 8.875 % interest rate.

APPENDIX D-6

RICHMOND SEWAGE TREATMENT PLANT

TABLE OF CONTENTS

SECTION	PAGE
1.0 Description of Existing Facilities	1
2.0 Proposed Plant Modifications	10
3.0 Proposed Retrofiting for Biological Nutrient Removal	12
4.0 Total Cost Summary	21

APPENDIX D-6

RICHMOND SEWAGE TREATMENT PLANT

1.0 DESCRIPTION OF EXISTING FACILITY

The existing Richmond, Virginia WWTP is designed to treat 70 MGD of combined dry weather and stormwater flow, the majority of which is domestic in origin.

Preliminary treatment includes primary and secondary screens and grit removal facilities. Secondary treatment consists of primary sedimentation tanks followed by activated sludge aeration basins and secondary sedimentation tanks. The wastewater flow is then conveyed to the final chlorine contact tank before its discharge to the outfall structure to the James River.

Sludge processes includes sludge thickening tanks which receive sludge from primary and secondary clarifiers. The sludge from the thickening tanks is subjected to anaerobic digestion and elutriation. Sludge is dewatered using filter presses and is then put on sludge drying beds for additional drying before its final disposal.

Figure D.6.1 is a schematic of the existing plant showing the liquid and sludge treatment facilities. Figure D.6.2 is the layout of the existing facility at the Richmond WWTP. Figure D.6.3 and D.6.4 are the proposed flow schematic to meet High Level Nutrient Discharge (HLND) and Low Level Nutrient Discharge (LLND) targets.

From Figure D.6.2 it can be seen that the present treatment plant is confined on the east and west sides. Land area available for expansion is limited to the north and south sides of the treatment plant.

Average annual plant loadings and effluent quality are shown in Table D.6.1. As can be seen the facility achieves excellent BOD_5 and TSS removals.

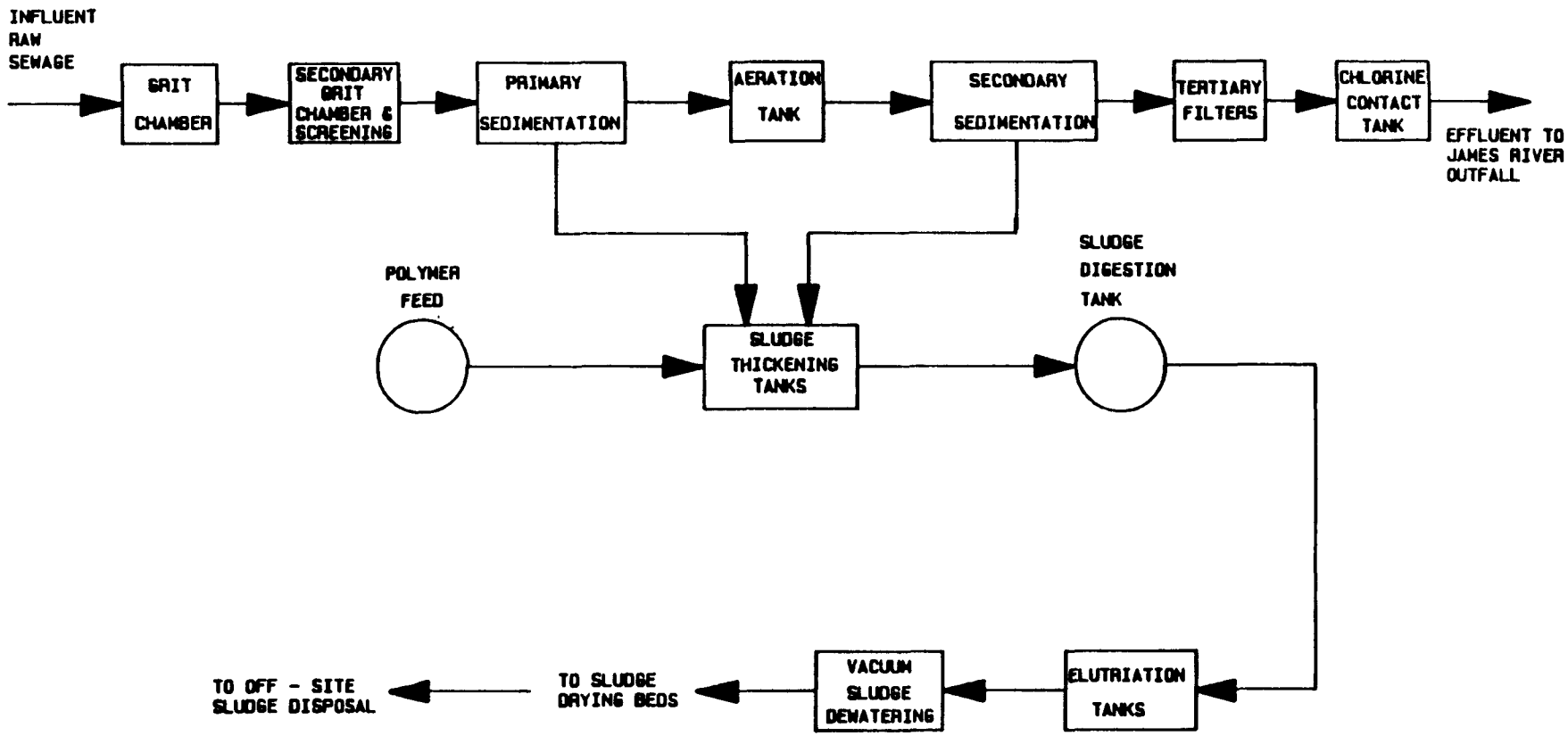

FIGURE D.6.1 EXISTING FLOW DIAGRAM
RICHMOND WASTEWATER TREATMENT PLANT

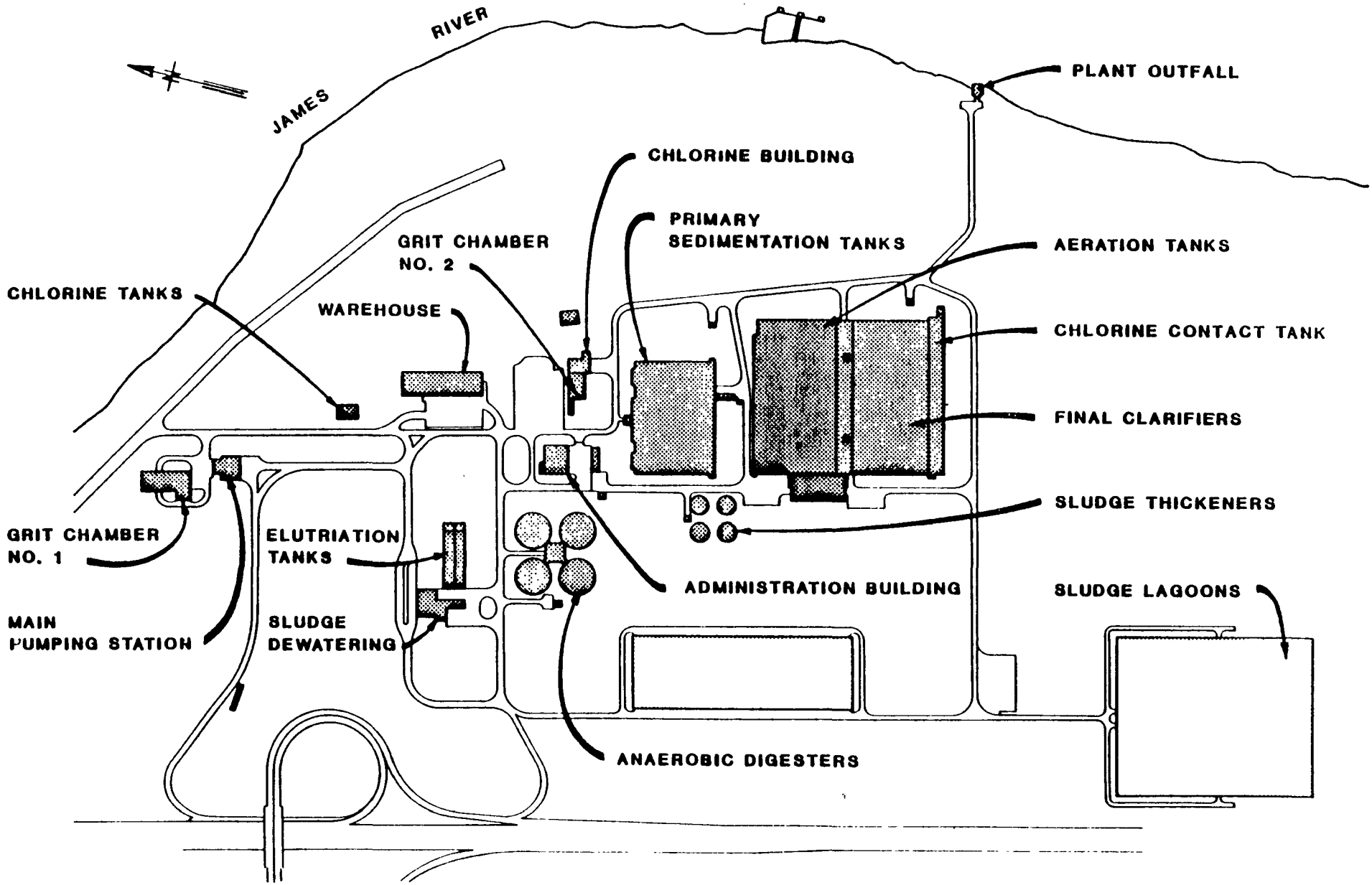

Figure D.6.2

PLANT SITE PLAN

FIGURE 4-1

GREELEY AND HANSEN ENGINEERS

RICHMOND WASTEWATER TREATMENT PLANT

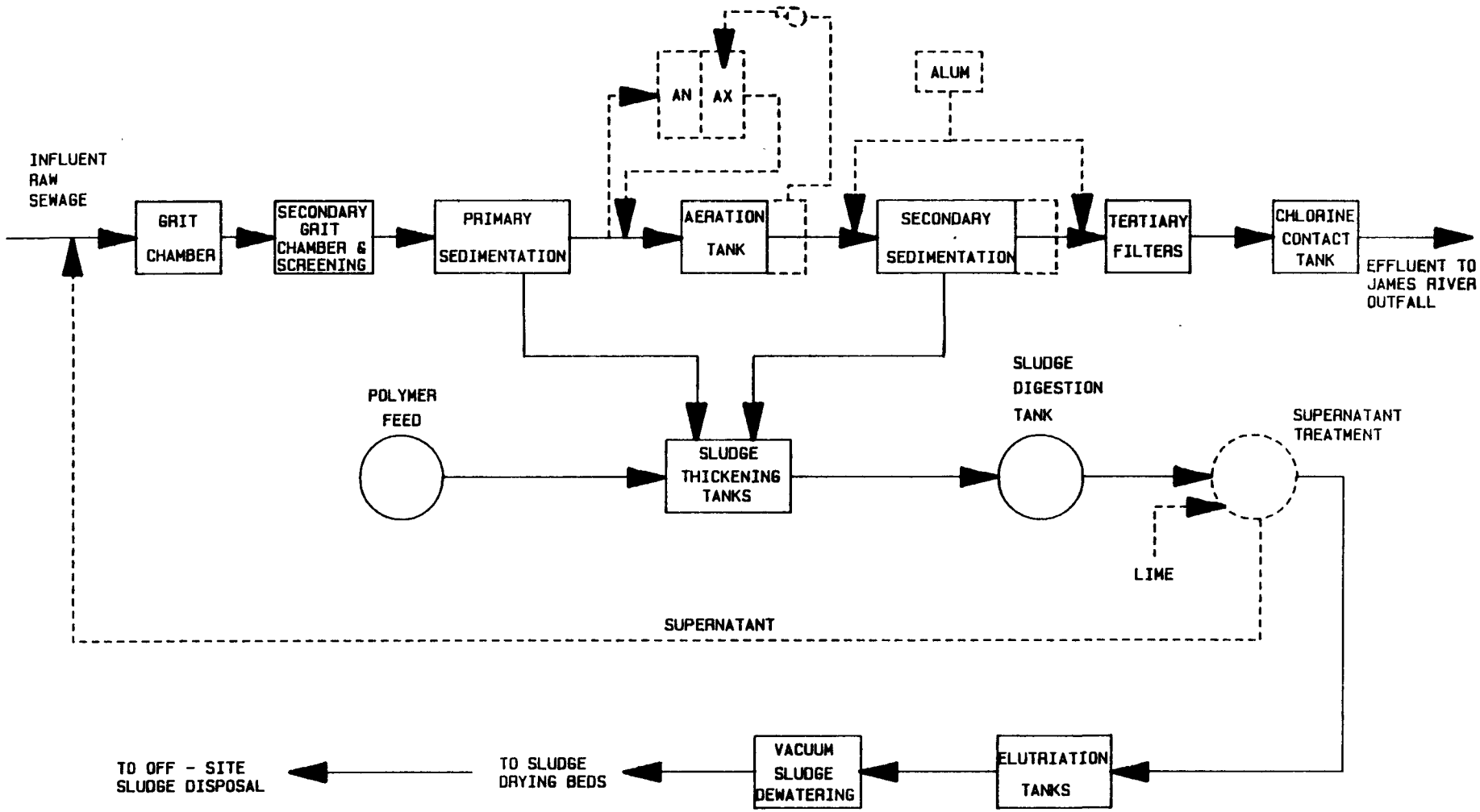

FIGURE D.6.3 PROPOSED FLOW DIAGRAM
RICHMOND WASTEWATER TREATMENT PLANT (HLND)

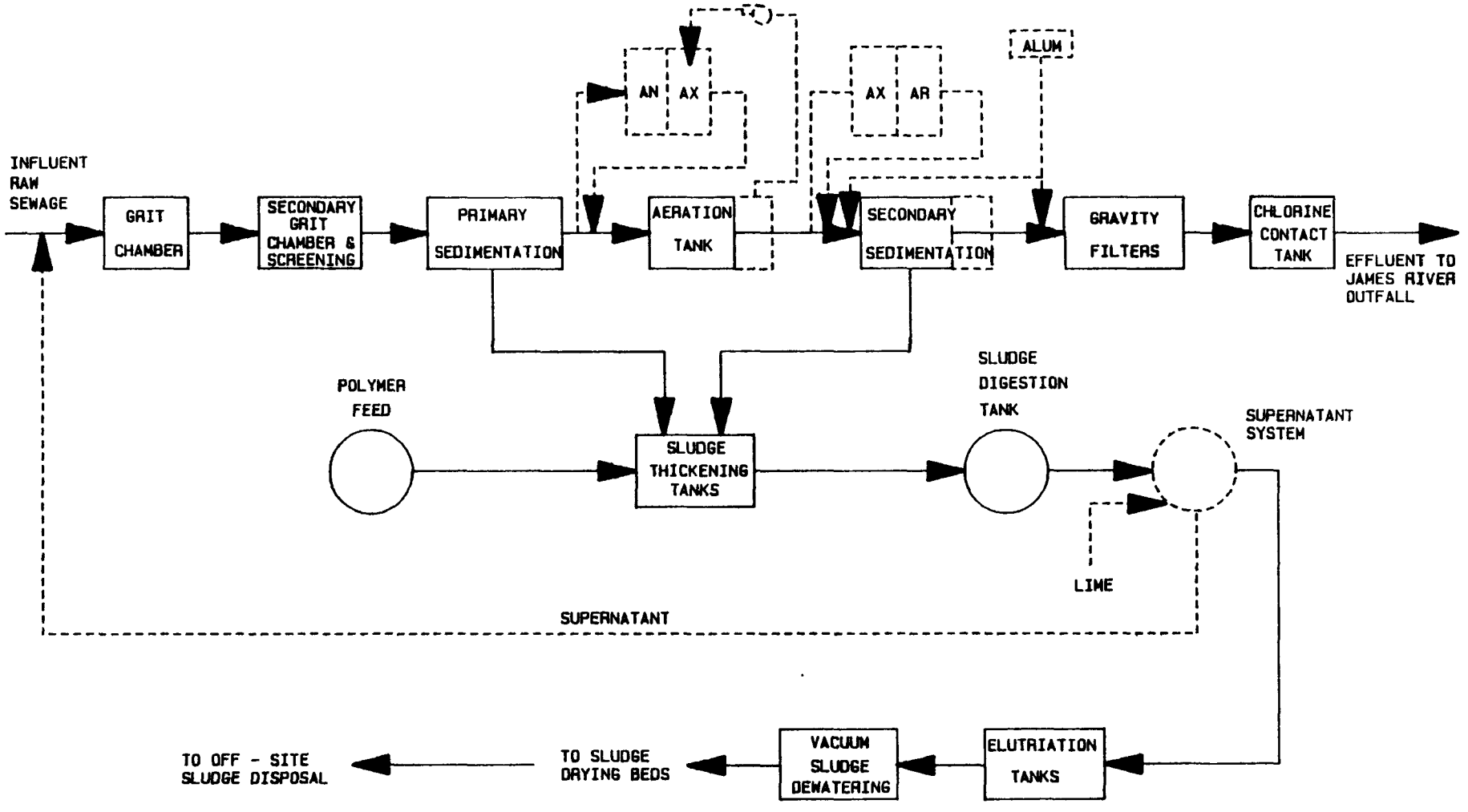

FIGURE D.6.4 PROPOSED FLOW DIAGRAM
RICHMOND WASTEWATER TREATMENT PLANT (LLND)

TABLE D.6.1

RICHMOND WWTP RAW SEWAGE
AND EFFLUENT CHARACTERISTICS

Parameter	Influent	Effluent	NPDES Permit
BOD_5, mg/l (1)	135	12	8
TSS, mg/l (1)	164	8	10
TP, mg/l (2)	8	5	N/A
Flow, MGD (1)	74	74	80
pH (2)	7	7	6-9
Fecal Coliform, No./1000 ml (1)	N/A	19	200
NH_3-N, mg/l (2)	14	14	N/A
NO_2-N, mg/l (2)	0.02	0.66	N/A
NO_3-N, mg/l (2)	0.05	1.27	N/A
TP, mg/l (3)			2.0
Residual Chlorine, mg/l (1)	--	2.99	4.0

(1) Obtained from DMR reports from Aug '86 to Aug '87

(2) Obtained from Monthly operations report.

(3) New requirements by State by year 1989.

N/A - not available

Existing plant component size and design criteria are presented as follows;

Bar Screens

Number of units	4
Width of channel	5 ft.
Max. depth of flow	6.6 ft.
Clear bar spacing	3/4 inch
Max. velocity of flow thru screen	3.6 ft/sec
Type	mechanically back cleaned
Disposal of screenings	container hauled to landfills

Grit Chambers

	Grit Chamber #1	Grit Chamber #2
Number of Channels	4	4
Length of Channel	70 ft.	75 ft.
Width of Channel	12 ft.	12 ft.
Controlled velocity	0.6 to 1.0 ft/sec	0.6 to 1.0 ft/sec
Min. depth of flow	5.2 ft.	4.7 ft.
Max. depth of flow	7.5 ft.	11.7 ft.
Method of cleaning	mechanical	clamshell bucket
Capacity of Grit Chamber	326 MGD	202 MGD

Main Raw Sewage Pumps

Pump No.	TDH Capacity ft.	Capacity MGD
1	35	40
2	35	75
3	35	75
4	35	75

Primary Sedimentation Tanks

Number of Tanks	4
Number of Bays/tank	4
Width of Bay	20 ft.
Length of Tanks	230 ft.
Avg. Water Depth	11.5 ft.
Total Tank Volume	846,000 cu ft
Total Surface Area	73,600 sq ft
Weir Overflow Rate	47,700 gals/day/ft of weir

Aeration Tanks

Number of Tanks	4
Length of Tanks	240 ft
Number of passes/tank	4 ft
Width of Passes	27 ft
Average water depth	15 ft
Total tank volume	11.08 million gals

Final Sedimentation Tanks

Number of tanks	6
Number of bays/tank	4
Width of bays	17.5 ft
Length of tanks	200 ft
Total tank area	84,000 sq ft
Avg water depth	11.0 ft
Total tank volume	6.91 mil. gal
Surface loading rate	836 gal/sq ft/day

Tertiary Filters

No. of filters	2
Length of tank	75' L
Width of tank	10' W
Depth of tank	5' D
Loading rate	2.58 gpm/ft^2 @ 50.2 MGD
Filter media	coarse media 2-3 MM particles

Chlorine Contact Tank

Size of tank (2 passes)	455 ft x 63 ft
Tank volume	195,000 cu ft
No. of evaporation and chlorination system	3
Capacity (each)	8,000 lbs/day

Air Blowers and Diffusers

Number of units	4
Rated capacity	21,500 cfm at 7.5 psig
Type	sparge
Number of diffusers/pass	196
Number of diffusers/tank	784

Primary Sludge and Scum to Digester

Number of Pumps	2
Rated Capacity	220 gpm
TDH at Rated Capacity	70 ft.

Primary Sludge to Thickener

Number of Pumps	5 (1 standby)
Rated Capacity	3850 gpm
TDH at Rated Capacity	13 ft.

Return Sludge Pumps

Number of Pumps	2
Rated Capacity	1050 gpm
TDH at Rated Capacity	36 ft.

Sludge Thickening Tanks

Number of Tanks	4
Dia. of Tanks	55 ft
Total Tank Area	9,500 sq ft
Side Water Depth	9 ft
Total Tank Volume	107,000 cu ft

Thickened Sludge Pumps

Number of Units	8
Rated Capacity	80 gpm
TDH at rated capacity	125 ft

Sludge Digester Tanks

	Fixed Cover	Gas Holder Cover Separate Tank
Number of tanks	3	1
Dia. of tank	95 to 96 ft	95 ft
Side water depth	27.75 ft	27.75 ft
Volume	225,700 cu ft	224,650 cu ft

Estimated destruction of volatile solids - 52.5%

Elutriation Tanks

Number of tanks	2
Length x width	185 x 35 ft
Surface area/tank	6,460 sq ft
Volume/tank	0.58 MGD

Vacuum Filters

Number of filters	6
Size of each unit	12 ft x 16 ft
Filter area/unit	2,412 sq ft

2.0 PROPOSED PLANT MODIFICATIONS:

The Richmond Wastewater Treatment Plant serves the City of Richmond, VA Henrico County, and parts of Chesterfield and Goochland Counties. Regional plans for wastewater treatment in the Richmond area have determined that Henrico, Hanover and Goochland flows will be removed from the Richmond plant service area and conveyed for treatment to a new plant located on the James River below Richmond at Deep Bottom. As a result of this, the revised NPDES permit and pending Consent Decree does not require the Richmond WWTP to meet final effluent limits until December 31, 1990 at which time the Henrico plant at Deep Bottom is expected to be in operation. The permit also required the City to make improvements to its existing wastewater treatment facilities along with certain wet weather and Shockoe system flows until the new Henrico, WWT facilities are operational in order to maintain interim limits of effluent quality.

The improvements at the plant necessary to maintain these interim limits of effluent quality are planned to be operational by mid-1988 and additional facilities to meet final effluent limits by July 1, 1989.

The total project cost for the recommended plant improvements is approximately 43 million dollars.

The following major improvements were recommended:

- Replace existing engines and electric motors with new and adjustable frequency drives.
- Add coagulant and automatic coagulant storage feed facilities.
- Relocate recycle flows/modify waste sludge systems.
- Add new sludge thickener facility for WAS thickening.
- Replace existing gravity thickener sludge pumps.
- Add new polymer storage and feed systems for gravity and centrifuge sludge thickening.
- Convert sludge separation tank to digester No. 6 and modify sludge feed, withdrawal and heating systems.
- Convert the elutriation tank to sludge holding tanks including mixing equipment.
- Replace vacuum filters with centrifuges.
- Perform all essential instrumentation and control improvements, and provide a new microprocessor-based data management system.
- Provide sludge grinding for primary, waste activated and digested sludge.
- Convert manual chlorine feed to automatic flow-paced feed system.
- Add new effluent filter facility.

3.0 PROPOSED RETROFITTING FOR BNR REMOVAL

Modification of the existing Richmond WWTP to meet the High level Nutrient Discharge (HLND) would require the addition of the anaerobic and anoxic zones prior to the aeration zone. Additional tankage will have to be built for the requirements for the anaerobic, anoxic and aeration zone as required in the A_2O Process. The construction of tertiary filters is already underway. Thus the addition of secondary clarifiers will be necessary to get an overflow rate of 600 gpd/ft^2. Plant visits indicated that the additional tankage required to meet the HLND limits could be accommodated at the three (3) sides of the existing aeration basin where some additional space is available. The BNR process is designed for a peak flow of 91 MGD. This takes into consideration of the Henrico County Sanitary flows. Aeration requirements are based on the individual BOD and NH_4 concentration. A peaking factor of 2.2 was established to design additional aeration requirements and is based on extreme average peak daily flows and loading rates.

To meet the Low Level Nutrient Discharge (LLND) limits, the five (5) stage Bardenpho process would require additional tankage. This additional tankage is proposed to be accommodated besides the existing areation basins. Recycle and RAS pumps would also be required as per design criteria for the Bardenpho Process. Tertiary filters and chemical addition systems are already under construction and are designed by Greeley and Hansen.

The costs associated with each category of discharge limits are as follows:

HIGH LEVEL NUTRIENT DISCHARGE (TP = 2 mg/l; TN = 8 mg/l)

INCREMENTAL CONSTRUCTION COST

TANKAGE REQUIREMENT SUMMARY FOR HLND RETROFIT

	Tankage Required 1000 cu.ft.	Req'mts Met by Exist. Tk 1000 cu.ft.	Addl'n Tkg. Reqd.	Surf. Area Reqd. sq. ft.	Land Area Available sq. ft.
Anaerobic(1Hr.)	507	0	507	33600	
Anoxic(1Hr.)	507	0	507	33600	
Aerobic(6Hr.)	3041	1483	1558	104400	
Total	4014	1483	2572	171600	821900

TANKAGE REQUIREMENTS:(16" WALL, 14" BASE SLAB AND 8" BAFFLES)

	Anaerobic Tankage	Anoxic Tankage	Aerobic Tankage
No. of Tanks	1	1	3
No. of passes/tank	5	5	5
Length per pass (ft)	240	240	240
Width per pass (ft)	28	28	29
Depth per pass (ft)	17	17	17
Total volume (cu.ft.)	571200	571200	1774800
No. of baffles/tank	4	4	4

MIXER REQUIREMENTS:

	Anaerobic Tankage	Anoxic Tankage
Volume of tanks (MG)	4.27	4.27
H.P. required (@ 50 HP/MG)	214	214
No. of Mixers (10 HP/mixer)	21	21
No. of standby mixers	4	4
Total no. of mixers	26	26
No. of mixers existing	0	0
No. of mixers required	26	26

AERATION REQUIREMENTS (Appendix C-8)

Plant design flowrate (MG)	91.00
Plant Influent BOD (mg/l)	135.00
Aeration Influent BOD (mg/l)	88.00
Plant Effluent BOD (mg/l)	12.00
BOD loading (mg/l)	76
Ammonia loading (mg/l)	18
Oxygen required (lbs/MG)	1388
Air required (SCFM)	84734
Air required (SCFM) (@ peaking factor of 2.2)	186415
Existing capacity (SCFM)	79500
Additional air required (SCFM)	106915

CLARIFIERS REQUIREMENT:

To get over flow rate of 600 gpd/sq.ft:	
Surface area required:	151667 sq.ft.
Existing surface area available:	84000 sq.ft.
Additional surface area required:	67667 sq.ft.

No. of clarifier	4
Channels/tank	5
Diameter	n/a
Length	200 ft.
Width	17 ft.
Depth	14 ft.

PUMPING REQUIREMENT:

	Existing Capacity		Additional Capacity Required	
	(mgd)	(gpm)	(mgd)	(gpm)
ARCY PUMPS @ 200%Q	0	0	182	126388
RAS PUMPS @ 75%Q	3	2083	65	45312

COST CALCULATIONS:

TANKAGE CONCRETE COST:

	Anaerobic Tankage	Anoxic Tankage	Aerobic Tankage
Concrete volumes:			
sidewalls (cu.yd.)	403	403	403
endwalls (cu.yd.)	235	235	243
base slab (cu.yd.)	1518	1518	1571
Concrete vol./tank (cu.yd.)	2156	2156	2217
Vol. of baffles (cu.yd.)	403	403	403
Concrete Cost per tank (@ $342.50/cu.yd. for concrete; $300.00/cu.yd. for baffles)	859330	859330	880223
Total concrete cost ($)	859330	859330	2640668
Total concrete cost for additional tankage ($).	4359328		

MIXER COST:

	Anaerobic Tankage	Anoxic Tankage
Cost of mixers ($) (@ $12,000 per mixer)	312000	312000
Installation cost ($) (@ 20% of mixer cost)	62400	62400
Installed mixer cost ($)	374400	374400
Total installed mixer cost ($)		748800

PUMP COST: (ARCY, RAS AND PUMP BUILDING)	No. of Pumps	Unit Cost ($)	Total Cost ($)
ARCY PUMP:			
24,500 gpm pumps each	8	55000	440000
RAS PUMP:			
14,350 gpm pump each	5	44000	220000
Subtotal	13		660000
Installation(20%)			132000
Subtotal			792000
Pump building(40' x 80') @ ($40/sq.ft.)			128000
Total Cost ($)			920000

CLARIFIER TANKAGE CONCRETE COST:

Concrete volumes:		
sidewalls (cu.yd.)	3319	
endwalls (cu.yd.)	470	
base slab (cu. yd.)	3138	
Concrete volume (cu.yd.)	6927	
Concrete Cost (@ $342.50/cu.yd. for concrete;		2372498
Equipment cost @ 40%		948999
Installation @ 20%		474500
Total cost for clarifiers ($)		3795996

BLOWERS & DIFFUSERS COST

	QTY.	SCFM	COST EACH ($)	CONTROL PKG.($)	TOTAL COST ($)
Blowers	6.00	20000	120000	2000	732000
Installation @ 20%					146400
Diffusers @ $30 per SCFM					3600000
Total installed cost ($)					4478400

ANAEROBIC DIGESTION SUPERNATANT SYSTEM COST:

Total cost ($) (Appendix C-15)	326163

ALUM FEED SYSTEM COST:

Total cost ($) (Appendix C-17)	218160

TOTAL EQUIPMENT COST ($): 14846000

INCREMENTAL O & M COST SUMMARY:

Maintenance and materials cost: (3% of total construction)	1134327
Labor cost:(current plant budget = $4,645,400) 25% of existing budget is labor cost	1161350
Chemicals: Includes Lime & Alum addition	333212

Power:

	HP	kW	kWHr/ YEAR	Cost @ $0.07/kWHr.
Mixers	427	320	2730566	191140
Pumps:				
ARCY	1200	898	7669094	536837
RAS	750	561	4793184	335523
Blowers:	5400	4039	34510925	2415765
Total power cost ($):				3479264

TOTAL O & M COST ($): 6108153

LOW LEVEL NUTRIENT DISCHARGE (TP = 0.5 mg/l; TN = 3 mg/l)

INCREMENTAL CONSTRUCTION COST

TANKAGE REQUIREMENT SUMMARY FOR LLND RETROFIT

	Tankage Required 1000cu.ft.	Req'mts Met by Exist Tkg 1000cu.ft	Addl'n Tkg. Reqd. 1000cu.ft.	Surf. Area Reqd. sq.ft.	Land Area Available sq.ft.
Anaerobic(2Hr)	1014	0	1014	72000	
1st Anoxic(3Hr)	1521	0	1521	100800	
Aerobic(9Hr)	4562	1483	3079	201600	
2nd Anoxic(3Hr)	1521	0	1521	100800	
Rearation(1Hr)	507	0	507	34560	
Total	9125	1483	7642	509760	821900

TANKAGE REQUIREMENTS:(16" WALL, 14" BASE SLAB AND 8" BAFFLES)

	Anaerobic Tankage	1st Anoxic Tankage	Aerobic Tankage	2nd Anoxic Tankage	Reaeration Tankage
No. of Tanks	2	3	4	3	2
No. of passes/tank	5	5	7	5	3
Length per pass (ft.)	240	240	240	240	240
Width per pass (ft.)	30	28	30	28	24
Depth per pass (ft.)	17	17	17	17	17
Total volume (cu.ft.)	1224000	1713600	3427200	1713600	587520
No. of baffles/tank	4	4	6	4	2

MIXER REQUIREMENTS:

	Anaerobic Tankage	1 st Anoxic Tankage	2 nd Anoxic Tankage
Volume of tanks (MG)	9.16	12.82	12.82
H.P. required (@ 50 HP/MG)	458	641	641
No. of Mixers (10 HP/mixer)	46	64	64
No. of standby mixers	9	13	13
Total no. of mixers	55	77	77
No. of mixers existing	0	0	0
No. of mixers existing	55	77	77

AERATION REQUIREMENTS (Appendix C-8)

Plant design flowrate (MG)	91
Plant Influent BOD (mg/l)	135
Aeration Influent BOD (mg/l)	88
Plant Effluent BOD (mg/l)	12
BOD loading (mg/l)	76
Ammonia loading (mg/l)	18
Oxygen required (lbs/MG)	1515
Air required (SCFM)	110100
Air required (SCFM) (@ peaking factor of 2.2)	242219
Existing capacity (SCFM)	79300
Additional air required (SCFM)	162919

CLARIFIERS REQUIREMENT:

To get over flow rate of 600 gpd/sq.ft:	
Surface area required:	151667 sq.ft.
Existing surface area available:	84000 sq.ft.
Additional surface area required:	67667 sq.ft.

No. of clarifier	4
Channels/tank	5
Diameter	n/a
Length	200 ft.
Width	17 ft.
Depth	14 ft.

PUMPING REQUIREMENT:

	Existing capacity (MG)		Additional capacity Required	
	(mgd)	(gpm)	(mgd)	(gpm)
ARCY PUMPS @ 400%	0	0	364	252776
RAS PUMPS @ 100% Q	3	2083	88	61111

COST CALCULATIONS:

TANKAGE CONCRETE COST:

	Anaerobic Tankage	1st Anoxic Tankage	Aerobic Tankage	2nd Anoxic Tankage	Reaeration Tankage
Concrete volumes:					
sidewalls (cu.yd.)	403	403	403	403	403
endwalls (cu.yd.)	252	235	353	235	121
base slab (cu.yd.)	1624	1518	2256	1518	801
Concrete vol./tank (cu.yd.)	2279	2156	3012	2156	1325
Vol. of baffles (cu.yd.)	403	403	604	403	201
Concrete Cost per tank (@ $342.50/cu.yd. for concrete; $300.00/cu.yd. for baffles)	901458	859330	1212810	859330	514113
Total concrete cost ($)	1802915	2577990	4851240	2577990	1028225
Total concrete cost for additional tankage ($).					12838360

MIXER COST:

	Anaerobic Tankage	1st Anoxic Tankage	2 nd Anoxic Tankage
Cost of mixers ($) (@ $12,000 per mixer)	660000	924000	924000
Installation cost ($) (@ 20% of mixer cost)	132000	184800	184800
Installed mixer cost ($)	792000	1108800	1108800
Total installed mixer cost ($)			3009600

PUMP COST: (ARCY, RAS AND PUMP BUILDING)

	No. of Pumps	Unit Cost ($)	Total Cost ($)
ARCY PUMP:			
24,500 gpm pump each	13	55000	715000
RAS PUMP:			
14,350 gpm pump each	6	44000	264000
Subtotal	19		979000
Installation(20%)			195800
Subtotal			1174800
Pump building(40' x 110') (@ $40/sq. ft.)			176000
Total Cost ($)			1350800

CLARIFIER TANKAGE CONCRETE COST:

Concrete volumes:		
sidewalls (cu.yd.)	3319	
endwalls (cu.yd.)	470	
base slab (cu. yd.)	3138	
Concrete volume (cu.yd.)	6927	
Concrete Cost (@ $342.50/cu.yd. for concrete;		2372498
Equipment cost @ 40%		948999
Installation @ 20%		474500
Total cost for clarifiers ($)		3795996

BLOWERS & DIFFUSERS COST

	QTY.	SCFM	COST EACH($)	CONTROL PKG.($)	TOTAL COST($)
Blowers	9	20000	120000	0	1080000
Installation @ 20%					216000
DIFFUSERS @ $30 per SCFM		162919			4887585
Total installed cost ($)					6183585

ANAEROBIC DIGESTION SUPERNATANT SYSTEM COST

Total cost ($) (Appendix C-15)	326163

ALUM FEED SYSTEM COST

Total cost ($) (Appendix C-17)	251766

TOTAL EQUIPMENT COST ($): 27757122

INCREMENTAL O & M COST SUMMARY:

Maintenance and materials cost
(3% of total construction) $ 2106856

Labor cost:(current plant budget = $4,645,400)
25% of existing budget is labor cost $ 1161350

Chemicals:
Includes Lime & Alum addition $ 885733

Power:

	HP	kW	kWHr/ YEAR	Cost @ $0.07/kWHr.
Mixers	1740	1301	11118790	778315
Pumps:				
ARCY	1950	1459	12462278	872359
RAS	900	673	5751821	402627
Blowers:	8100	6059	51766387	3623647
Total Power Cost ($):				5676949

TOTAL O & M COST ($): 9830889

TOTAL COST SUMMARY

INCREMENTAL CONSTRUCTION COST SUMMARY FOR RICHMOND WWTP, X $1000

COST ITEM		HLND	LLND
Tankage requirements	$	4359	12838
Mixers	$	749	3010
Clarifiers	$	3796	3796
Pumps-ARCY, RAS, Bldg. for pumps	$	920	1351
Alum Feed	$	218	252
Supernatant System	$	326	326
Blowers & Duffusers	$	4478	6184
Eff. Filter-Pumps, Structure, Media	$	----	----
SUBTOTAL		14846	27757
Non Component Cost (1)		9502	17466
TOTAL CONSTRUCTION		24348	45223
Eng. & Const. Supervision(19%) (2)		4626	8592
SUBTOTAL		28974	53815
Contingencies(20%)		5795	10763
Interest during construction(1/2PCI)		3042	5651
TOTAL CAPITAL COST		37811	70229

NOTES:
(1) Non-Component cost includes electrical, instrumentation, yard piping, site preparation & misc. work, and retrofit-construction added cost.
(2) Engineering(10%), construction supervision(9%).

INCREMENTAL O & M COST SUMMARY

ITEM	HLND	LLND
Maintenance & Materials	1134	2107
Labor	1161	1161
Chemicals	333	886
Power	3479	5677
SUBTOTAL	6107	9831
TOTAL ANNUAL COST(1)	10209	17451

NOTES:
(1) Total annual cost is O & M cost and annualized capital using 0.1085 capital recovery factor at 8.875 % interest rate.

APPENDIX D-7

BACK RIVER
WASTEWATER TREATMENT PLANT

TABLE OF CONTENTS

SECTION	PAGE
1.0 Description of Existing Facilities	1
2.0 Proposed Plant Modifications	7
3.0 Proposed Retrofiting for Biological Nutrient Removal	9
4.0 Total Cost Summary	18

APPENDIX D-7

BACK RIVER WASTEWATER TREATMENT PLANT

1.0 DESCRIPTION OF EXISTING FACILITIES

The Back River WWTP is a secondary treatment facility, owned and operated by the City of Baltimore with an average daily reported flow of 180 MGD. Bethlehem Steel Corporation at its Sparrows Point Plant currently has an agreement with the City to purchase and reuse about 100 MGD of the treated water which is later discharged to Bear Creek. The remaining wastewater from the City treatment plant is discharged to the Back River estuary. Preliminary treatment facilities consist of inlet chambers, mechanical bar screens, grit removal and flow meters. Secondary treatment is achieved by primary sedimentation followed by fixed film trickling filters and humus tanks (clarifiers) to control the sloughed solids from the trickling filter media. Chlorine is added to the wastewater before its final discharge to Back River. After secondary treatment, a portion of the wastewater is diverted to additional sedimentation units before its conveyance to the Bethelhem Steel Plant.

Primary sludge from the primary clarifier and dilution water from the trickling filter is pumped to gravity sludge thickeners and was WAS is pumped to flotation thickners. The thickened sludges are subjected to high rate anaerobic digestion, elutriation, and centrifugal dewatering before its final disposal as sludge cake.

Figure D.7.1 is a schematic of the existing plant showing the liquid stream unit processes and the sludge treatment and handling facilities.

Figure D.7.2 shows the layout of the existing plant and D.7.3 and D.7.4 are the flow diagrams for the proposed scheme for HLND and LLND targets of treatment.

All the unit treatment processes were designed based on an average design flow of 80 MGD discharged to Back River and 100 MGD discharged from Bethelhem Steel to Bear Creek for a total average design for of 180 MGD. The influent, effluent and current NPDES permit requirements for the Back River plant is presented in Table D.7.1. It can be seen from Table D.7.1 that the treatment plant is not in compliance with existing effluent limits. The plant has a current interim permit requirement of 3 mg/l for TKN (seasonal) and 2 mg/l for total Phosphorous for the effluent used by Bethlehem Steel. Effluent discharged to Back River must meet permit requirements of 2.0 mg/l NH_4 (seasonal) and 0.2 mg/l total Phosphorus.

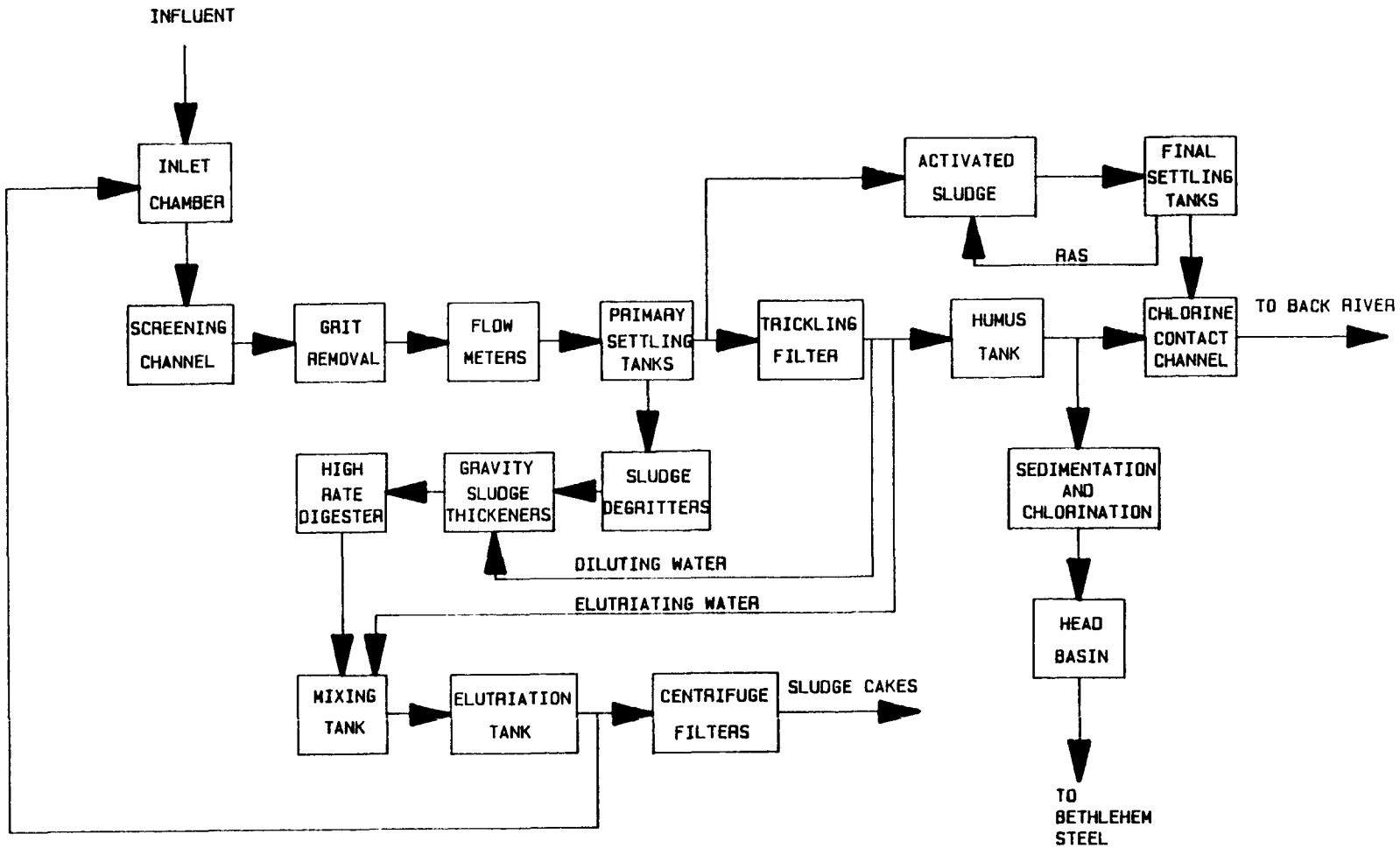

FIGURE D.7.1 EXISTING FLOW DIAGRAM
BACK RIVER WASTEWATER TREATMENT PLANT

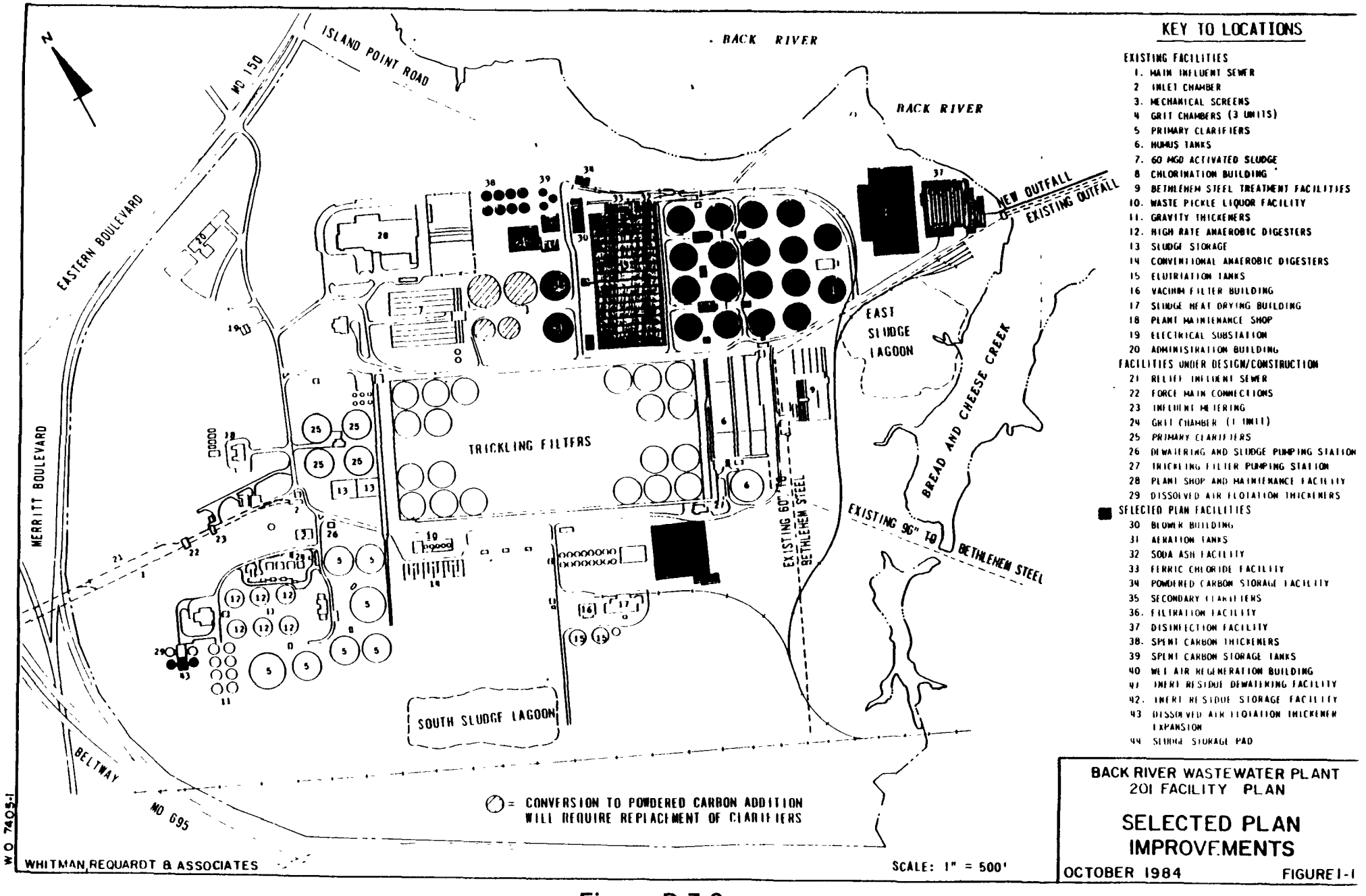
N
MD 150
ISLAND POINT ROAD
BACK RIVER
BACK RIVER
EASTERN BOULEVARD
MERRITT BOULEVARD
NEW OUTFALL
EXISTING OUTFALL
EAST SLUDGE LAGOON
BREAD AND CHEESE CREEK
TRICKLING FILTERS
EXISTING 60" TO BETHLEHEM STEEL
EXISTING 96" TO BETHLEHEM STEEL
SOUTH SLUDGE LAGOON
BELTWAY
MD 695
= CONVERSION TO POWDERED CARBON ADDITION WILL REQUIRE REPLACEMENT OF CLARIFIERS
WHITMAN, REQUARDT & ASSOCIATES
SCALE: 1" = 500'
W O 7405-1
KEY TO LOCATIONS
EXISTING FACILITIES
1. MAIN INFLUENT SEWER
2 INLET CHAMBER
3. MECHANICAL SCREENS
4 GRIT CHAMBERS (3 UNITS)
5 PRIMARY CLARIFIERS
6. HUMUS TANKS
7. 60 MGD ACTIVATED SLUDGE
8 CHLORINATION BUILDING
9 BETHLEHEM STEEL TREATMENT FACILITIES
10. WASTE PICKLE LIQUOR FACILITY
11. GRAVITY THICKENERS
12. HIGH RATE ANAEROBIC DIGESTERS
13 SLUDGE STORAGE
14 CONVENTIONAL ANAEROBIC DIGESTERS
15 ELUTRIATION TANKS
16 VACUUM FILTER BUILDING
17 SLUDGE HEAT DRYING BUILDING
18 PLANT MAINTENANCE SHOP
19 ELECTRICAL SUBSTATION
20 ADMINISTRATION BUILDING
FACILITIES UNDER DESIGN/CONSTRUCTION
21 RELIEF INFLUENT SEWER
22 FORCE MAIN CONNECTIONS
23 INFLUENT METERING
24 GRIT CHAMBER (1 UNIT)
25 PRIMARY CLARIFIERS
26 DEWATERING AND SLUDGE PUMPING STATION
27 TRICKLING FILTER PUMPING STATION
28 PLANT SHOP AND MAINTENANCE FACILITY
29 DISSOLVED AIR FLOTATION THICKENERS
SELECTED PLAN FACILITIES
30 BLOWER BUILDING
31 AERATION TANKS
32 SODA ASH FACILITY
33 FERRIC CHLORIDE FACILITY
34 POWDERED CARBON STORAGE FACILITY
35 SECONDARY CLARIFIERS
36. FILTRATION FACILITY
37 DISINFECTION FACILITY
38. SPENT CARBON THICKENERS
39 SPENT CARBON STORAGE TANKS
40 WET AIR REGENERATION BUILDING
41 INERT RESIDUE DEWATERING FACILITY
42. INERT RESIDUE STORAGE FACILITY
43 DISSOLVED AIR FLOTATION THICKENER EXPANSION
44 SLUDGE STORAGE PAD
BACK RIVER WASTEWATER PLANT
201 FACILITY PLAN
SELECTED PLAN IMPROVEMENTS
OCTOBER 1984
FIGURE 1-1

Figure D.7.2

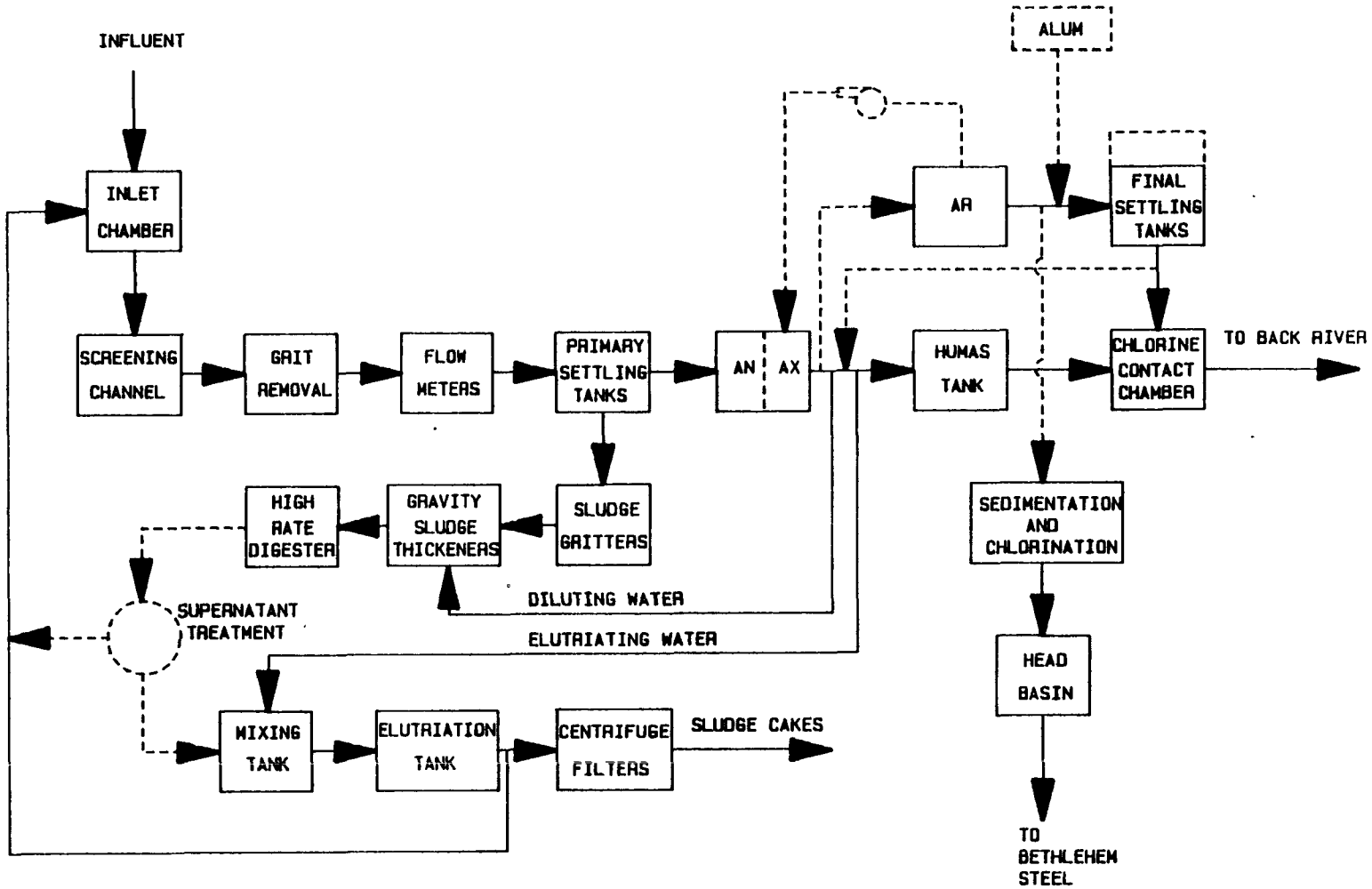

FIGURE D.7.3 PROPOSED FLOW DIAGRAM
BACK RIVER WASTEWATER TREATMENT PLANT (HLND)

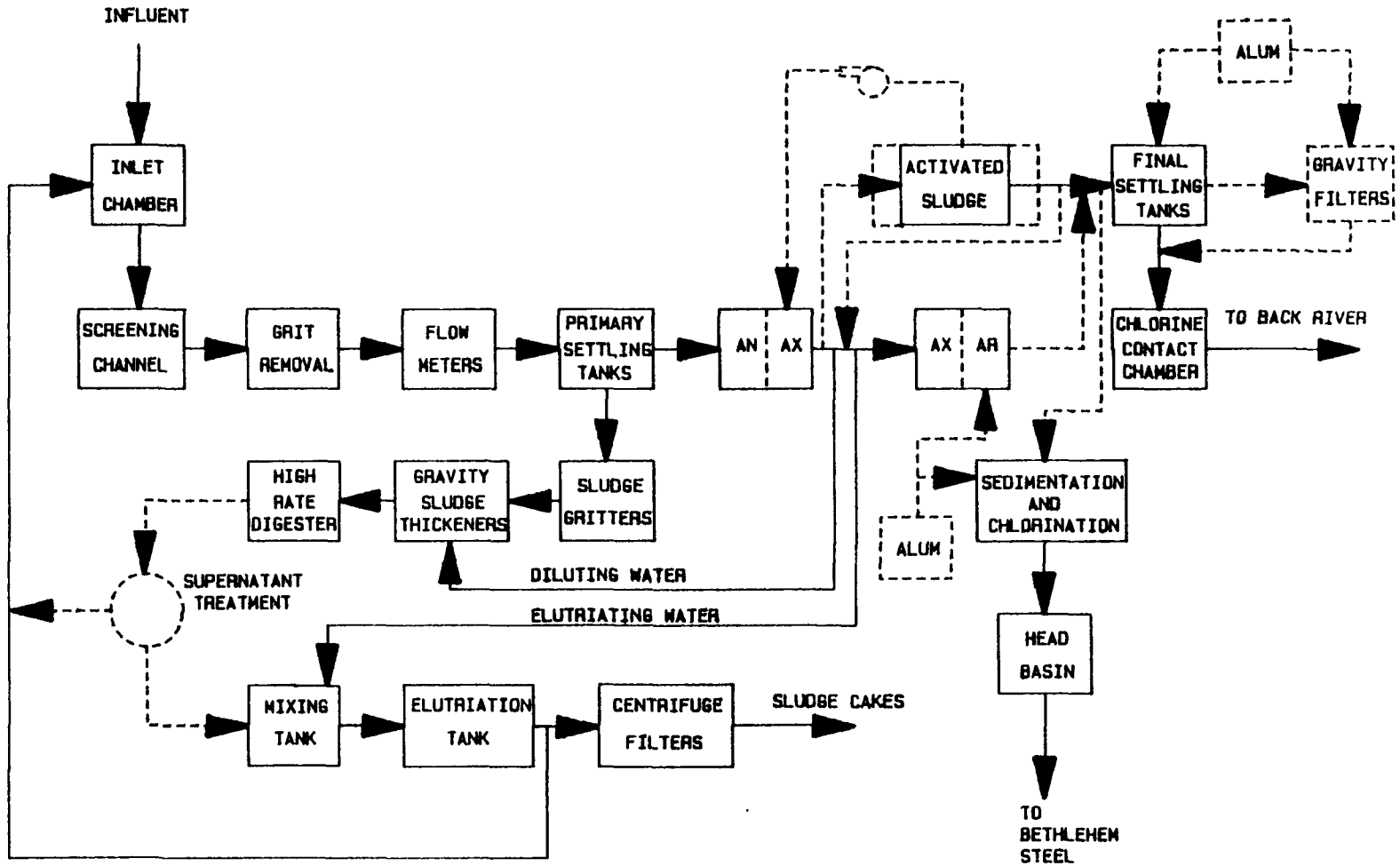

FIGURE D.7.4 PROPOSED FLOW DIAGRAM
BACK RIVER WASTEWATER TREATMENT PLANT (LLND)

TABLE D.7.1

BACK RIVER RAW SEWAGE INFLUENT, EFFLUENT AND CURRENT (1987) NPDES PERMIT REQUIREMENTS
(1984, 1985, 1986 ANNUAL AVERAGE)

Parameter	Influent, mg/l	Effluent, mg/l	NPDES Permit	
			Back River	Bethelhem Steel
BOD	221	22	10	20
SS	178	28	10	30
TP	6	1	0.2	2.0
NH_4	N/A	16	2.0 (4/15) to (10/15)	N/R
TKN	N/A	24	3 (4/15) to (10/15)	N/R
NO_2	N/A	1.68	N/R	N/R
NO_3	N/A	0.23	N/R	N/R
D.O.	N/A	N/A	5	5
Residual CL_2	N/A	N/A	0.5	0.02

N/A - not available
N/R - not required

The existing plant component and sizes are presented below:

Secondary Treatment

Primary Settling Tanks	2 @ 200 ft dia. x 12 ft SWD; 9 @ 170 ft dia. x 12.5 ft SWD. Total volume = 24.74 MG; area = 267,114 sqft.
Trickling Filters	Volume = 256 acre ft (11,151 x 10^3 cu ft); area = 30 acres (1306.7 x 10^3 sqft).
Activated Sludge Tanks	Volume = 10.72 MG; area = 91,920 sqft; SWD = 15.6 ft.
Final Settling Tanks	Volume = 7.04 MG; area = 75,820 sqft; 2 @ 126 ft dia. 13.3 SWD; 3 @ 180 ft dia. x 12 ft SWD.
Humus Tanks	Volume = 3 MG; area = 104,494 sqft; 4 @ 143 ft x 143 ft x 10 ft SWD; 1 @ 170 ft dia. x 9 ft SWD;

Sludge Treatment

Gravity Sludge Thickeners	Area = 26,400 sqft, diameter = 65 ft, SWD = 9.5 ft, volume = 2.172 MG.
Flotation Thickner	Area = 3930 sqft dia. = 50 ft SWD = 12.25 ft.
Anaerobic Digesters	Area = 47,100 sqft, diameter = 100 ft, SWD = 26.5 ft, volume = 8.08 MG.
Sludge Storage Tanks	Area = 10,000 sq ft, diameter = 80 ft, SWD = 15 ft, volume = 1.122 MG.
Elutriation Tanks	4 @ 525 sq ft each; 2 @ 750 sq ft, total area = 3600 sq ft.
Vaccum Filters/Centrifuges	2 @ 140 gpm each (260 gpm max) 6% TS feed.

2.0 PROPOSED PLANT MODIFICATIONS:

The Back River estuary is a severly stressed ecosystem suffering from heavy nutrient loads that encourage algae growth and result in the depletion of the oxygen necessary to sustain healthy aquatic life. Identified as the major source of nutrients and oxygen demand, the Back River plant discharge is subjected to stringent effluent limitations. The City of Baltimore thus started selecting the most cost effective and environmentally sound means of treating the existing and anticipated

wastewater flows to be in compliance with the discharge permit. A two phase facility plan for recommended improvements for a period of 20 years starting in 1983 has been prepared. The effluent limits defined for continued discharge to Back River requires Advanced Wastewater Treatment (AWT) which employs processes for removing nutrients (Phosphorus and nitrogen) as well as increased levels of the more conventional pollutants including BOD and SS. The effluent permit requirement to Bethelhem Steel also require Advanced Wastewater Treatment (AWT) levels which limits the BOD, SS, Phosphorous, and nitrogen concentration.

Following is the list of liquid treatment processes to be modified as a part of the present upgrading plan:

- A new fine bubble air activated sludge plant (126 MGD) will be constructed to replace the trickling filters to provide an effluent quality meeting 20/30 mg/l BOD and suspended solids limits. After the new activated plant becomes operational, the trickling filters can be removed from service.

- Phosphorous reduction will be achieved by adding waste pickle liquor to produce an effluent with less than 2 mg/l of phosphorous. In the future provisions will be made to add ferric chloride to the final settling tanks to reduce the total Phosphorous levels to less than 1 mg/l.

- Tertiary filtration of the effluent from the activated sludge process will be provided to further reduce Phosphorous levels to 0.2 mg/l, TKN to 3 mg/l and BOD_5 and suspended solids to 10 mg/l.

- The plant effluent will be disinfected using chlorination and dechlorination.

Following is the list of sludge management processes to be upgraded:

- Dissolved air flotation units will be constructed to thicken the biological sludges and thereby improve the operation of the existing digesters. The existing gravity thickeners, digesters, and centrifuges will continue to be used.

- A full service composting operations service for design, construction, maintenance and marketing will be established. Initially all sludge produced will continue to be hauled under contract to approved land application sites.

The treatment plant is now under expansion to construct a new fine bubble 126 MGD activated sludge plant. Plant officials are currently investigating the alternative issue of selecting a cost effective process with a design safety factor of 1.5 that may be imposed by the EPA instead of the factor of 2.25 that was used in originally selecting a single-stage biological nitrification system using a powdered activated carbon process.

The planned expansion now does not include the powdered carbon process and officials are currently evaluating alternatives to replace it. A task force committee has been established to evaluate different processes and select the best alternative.

3.0 PROPOSED RETROFITTING FOR BIOLOGICAL NUTRIENT REMOVAL

The proposed retrofit for BNR process would include the three (3) stage A_2O process for HLND and five (5) stage Bardenpho Process for LLND. The existing treatment scheme has trickling filters as secondary treatment. The area utilized by the trickling filters would be utilized to meet the tankage volume requirements for HLND and LLND targets. The plant currently does not have any teriary filters and thus secondary clarifiers would be added to obtain an overflow rate of 400 gpd/sg ft. A new aeration system will be needed to meet the oxygen requirements.

The retrofit details of the two levels of treatment are presented as follows:

HIGH LEVEL NUTRIENT DISCHARGE (TP = 2 mg/l; TN = 8 mg/l)

INCREMENTAL CONSTRUCTION COST

TANKAGE REQUIREMENT SUMMARY FOR HLND RETROFIT

	Tankage Required 1000 cu.ft.	Req'mts Met by Exist. Tk 1000 cu.ft.	Addl'n Tkg. Reqd.	Surf. Area Reqd. sq. ft.	Land Area Available sq. ft.
Anaerobic(1Hr.)	1164	0	1164	73320	
Anoxic(1Hr.)	1164	0	1164	73320	
Aerobic(6Hr.)	6985	1433	5552	357120	
Total	9313	1433	7880	503760	1306700

TANKAGE REQUIREMENTS:(16" WALL, 14" BASE SLAB AND 8" BAFFLES)

	Anaerobic Tankage	Anoxic Tankage	Aerobic Tankage
No. of Tanks	3	3	8
No. of passes/tank	4	4	6
Length per pass (ft)	235	235	240
Width per pass (ft)	26	26	31
Depth per pass (ft)	16	16	16
Total volume (cu.ft.)	1173120	1173120	5713920
No. of baffles/tank	3	3	5

MIXER REQUIREMENTS:

	Anaerobic Tankage	Anoxic Tankage
Volume of tanks (MG)	8.71	8.71
H.P. required (@ 50 HP/MG)	436	436
No. of Mixers (10 HP/mixer)	44	44
No. of standby mixers	9	9
Total no. of mixers	52	52
No. of mixers existing	0	0
No. of mixers required	52	52

AERATION REQUIREMENTS (Appendix C-8)

Plant design flowrate (MG)	209.00
Plant Influent BOD (mg/l)	221.00
Aeration Influent BOD (mg/l)	190.00
Plant Effluent BOD (mg/l)	22.00
BOD loading (mg/l)	168
Ammonia loading (mg/l)	16
Oxygen required (lbs/MG)	2155
Air required (SCFM)	302205
Air required (SCFM) (@ peaking factor of 2.0)	604410
Existing capacity (SCFM)	96500
Additional air required (SCFM)	507910

CLARIFIERS REQUIREMENT:

To get over flow rate of 400 gpd/sq.ft;	
Surface area required:	522500 sq.ft.
Existing surface area available:	101279 sq.ft.
Additional surface area required:	421221 sq.ft.

No. of clarifier	17
Channels/tank	n/a
Diameter	180 ft.
Length	n/a
Width	n/a
Depth	12 ft.

PUMPING REQUIREMENT:

	Existing Capacity		Additional Capacity Required	
	(mgd)	(gpm)	(mgd)	(gpm)
ARCY PUMPS @ 200%Q	0	0	418	290276
RAS PUMPS @ 75%Q	47	32639	110	76215

COST CALCULATIONS:

TANKAGE CONCRETE COST:

	Anaerobic Tankage	Anoxic Tankage	Aerobic Tankage
Concrete volumes:			
sidewalls (cu.yd.)	371	371	379
endwalls (cu.yd.)	164	164	294
base slab (cu.yd.)	1115	1115	2003
Concrete vol./tank (cu.yd.)	1650	1650	2676
Vol. of baffles (cu.yd.)	279	279	474
Concrete Cost per tank (@ $342.50/cu.yd. for concrete; $300.00/cu.yd. for baffles)	648939	648939	1058802
Total concrete cost ($)	1946818	1946818	8470415
Total concrete cost for additional tankage ($).	12364050		

MIXER COST:

	Anaerobic Tankage	Anoxic Tankage
Cost of mixers ($) (@ $12,000 per mixer)	624000	624000
Installation cost ($) (@ 20% of mixer cost)	124800	124800
Installed mixer cost ($)	748800	748800
Total installed mixer cost ($)		1497600

PUMP COST: (ARCY, RAS AND PUMP BUILDING)	No. of Pumps	Unit Cost($)	Total Cost($)
ARCY PUMP:			
72,500 gpm pumps each	6	100000	600000
RAS PUMP:			
24,500 gpm pump each	5	55000	275000
Subtotal	11		875000
Installation(20%)			175000
Subtotal			1050000
Pump building(60' x 60') @ ($40/sq.ft.)			144000
Total cost ($)			1194000

CLARIFIER TANKAGE CONCRETE COST:

Concrete volumes:	
sidewalls (cu.yd.)	8640
endwalls (cu.yd.)	0
base slab (cu. yd.)	19532
Concrete volume (cu.yd.)	28172
Concrete Cost (@ $342.50/cu.yd. for concrete;	9648910
Equipment cost @ 40%	3859564
Installation @ 20%	1929782
Total cost for clarifiers ($)	15438256

BLOWERS & DIFFUSERS COST

	QTY.	SCFM	COST EACH($)	CONTROL PKG.($)	TOTAL COST($)
Blowers	26.00	20000	120000	2000	3172000
Installation @ 20%					634400
Diffusers @ $30 per SCFM		507910			15600000
Total installed cost ($)					19406400

ANAEROBIC DIGESTION SUPERNATANT SYSTEM COST:

Total cost ($) (Appendix C-15)	583726

ALUM FEED SYSTEM COST:

Total cost ($) (Appendix C-17)	501600

TOTAL EQUIPMENT COST ($): 50986000

INCREMENTAL O & M COST SUMMARY:

Maintenance and materials cost: (3% of total construction)	3901610
Labor cost:(current plant budget = $7,000,000) 25% of existing budget is labor cost	1750000
Chemicals: Includes Lime & Alum addition	765288

Power:

	HP	kW	kWHr/ YEAR	Cost @ $0.07/kWHr.
Mixers	871	652	5566484	389654
Pumps:				
ARCY	2400	1795	15338189	1073673
RAS	750	561	4793184	335523
Blowers:	23400	17503	149547341	10468314
Total power cost:				12267164

TOTAL O & M COST ($): 18684062

LOW LEVEL NUTRIENT DISCHARGE (TP = 0.5 mg/l; TN = 3 mg/l)

INCREMENTAL CONSTRUCTION COST

TANKAGE REQUIREMENT SUMMARY FOR LLND RETROFIT

	Tankage Required 1000cu.ft.	Req'mts Met by Exist Tkg 1000cu.ft	Addl'n Tkg. Reqd. 1000cu.ft.	Surf. Area Reqd. sq.ft.	Land Area Available sq.ft.
Anaerobic(2Hr)	2328	0	2328	132480	
1st Anoxic(3Hr)	3493	0	3493	175000	
Aerobic(9Hr)	10478	1433	9045	459000	
2nd Anoxic(3Hr)	3493	0	3493	175000	
Rearation(1Hr)	1164	0	1164	60000	
Total	20956	1433	19523	1001480	1306700

TANKAGE REQUIREMENTS:(16" WALL, 14" BASE SLAB AND 8" BAFFLES)

	Anaerobic Tankage	1st Anoxic Tankage	Aerobic Tankage	2nd Anoxic Tankage	Reaeration Tankage
No. of Tanks	6	7	10	7	2
No. of passes/tank	4	4	6	4	4
Length per pass (ft.)	230	250	255	250	250
Width per pass (ft.)	24	25	30	25	30
Depth per pass (ft.)	20	20	20	20	20
Total volume (cu.ft.)	2649600	3500000	9180000	3500000	1200000
No. of baffles/tank	3	3	5	3	3

MIXER REQUIREMENTS:

	Anaerobic Tankage	1 st Anoxic Tankage	2 nd Anoxic Tankage
Volume of tanks (MG)	19.82	26.18	26.18
H.P. required (@ 50 HP/MG)	991	1309	1309
No. of Mixers (10 HP/mixer)	99	131	131
No. of standby mixers	20	26	26
Total no. of mixers	119	157	157
No. of mixers existing	0	0	0
No. of mixers required	119	157	157

AERATION REQUIREMENTS (Appendix C-8)

Plant design flowrate (MG)	209
Plant Influent BOD (mg/l)	221
Aeration Influent BOD (mg/l)	190
Plant Effluent BOD (mg/l)	22
BOD loading (mg/l)	168
Ammonia loading (mg/l)	16
Oxygen required (lbs/MG)	2435
Air required (SCFM)	377501
Air required (SCFM) (@ peaking factor of 2.0)	755003
Existing capacity (SCFM)	96500
Additional air required (SCFM)	658503

CLARIFIERS REQUIREMENT:

To get over flow rate of 400 gpd/sq.ft:		
Surface area required:	522500	sq.ft.
Existing surface area available:	101279	sq.ft.
Additional surface area required:	421221	sq.ft.

No. of clarifier	17
Channels/tank	n/a
Diameter	180 ft.
Length	n/a
Width	n/a
Depth	12 ft.

PUMPING REQUIREMENT:

	Existing capacity (MG)		Additional capacity Required	
	(mgd)	(gpm)	(mgd)	(gpm)
ARCY PUMPS @ 400%	0	0	836	580552
RAS PUMPS @ 100% Q	63	43750	146	101388

COST CALCULATIONS:

TANKAGE CONCRETE COST:

	Anaerobic Tankage	1st Anoxic Tankage	Aerobic Tankage	2nd Anoxic Tankage	Reaeration Tankage
Concrete volumes:					
sidewalls (cu.yd.)	454	494	504	494	494
endwalls (cu.yd.)	190	198	356	198	237
base slab (cu.yd.)	1011	1141	2059	1141	1361
Concrete vol./tank (cu.yd.)	1655	1833	2919	1833	2092
Vol. of baffles (cu.yd.)	341	370	630	370	370
Concrete Cost per tank (@ $342.50/cu.yd. for concrete; $300.00/cu.yd. for baffles)	669138	738803	1188758	738803	827510
Total concrete cost ($)	4014825	5171618	11887575	5171618	1655020
Total concrete cost for additional tankage ($).					27900655

MIXER COST:

	Anaerobic Tankage	1st Anoxic Tankage	2 nd Anoxic Tankage
Cost of mixers ($) (@ $12,000 per mixer)	1428000	1884000	1884000
Installation cost ($) (@ 20% of mixer cost)	285600	376800	376800
Installed mixer cost ($)	1713600	2260800	2260800
Total installed mixer cost ($)			6235200

PUMP COST: (ARCY, RAS AND PUMP BUILDING)

	No. of Pumps	Unit Cost($)	Total Cost($)
ARCY PUMP:			
72,500 gpm pump each	10	100000	1000000
RAS PUMP:			
24,500 gpm pump each	6	55000	330000
Subtotal	16		1330000
Installation(20%)			266000
Subtotal			1596000
Pump building(60' x 60') (@ $40/sq. ft.)			144000
Total cost ($)			1740000

CLARIFIER TANKAGE CONCRETE COST:

Concrete volumes:	
sidewalls (cu.yd.)	8640
endwalls (cu.yd.)	0
base slab (cu. yd.)	19532
Concrete volume (cu.yd.)	28172
Concrete Cost (@ $342.50/cu.yd. for concrete;	9648910
Equipment cost @ 40%	3859564
Installation @ 20%	1929782
Total cost for clarifiers ($)	15438256

BLOWERS & DIFFUSERS COST

	QTY.	SCFM	COST EACH($)	CONTROL PKG.($)	TOTAL COST($)
Blowers	33	20000	120000	0	3960000
Installation @ 20%					792000
DIFFUSERS @ $30 per SCFM		658503			19755077
Total installed cost					24507077

ANAEROBIC DIGESTION SUPERNATANT SYSTEM COST

Total cost ($) (Appendix C-15)	583726

ALUM FEED SYSTEM COST

Total cost ($) (Appendix C-17)	578233

TOTAL EQUIPMENT COST ($): 76983144

INCREMENTAL O & M COST SUMMARY:

Maintenance and materials cost
(3% of total construction) $ 5866142

Labor cost:(current plant budget = $7,000,000)
25% of existing budget is labor cost $ 1750000

Chemicals:
Includes Lime & Alum addition $ 2038098

Power:

	HP	kW	kWHr/ YEAR	Cost @ $0.07/kWHr.
Mixers	3609	2699	23064484	1614514
Pumps:				
ARCY	4000	2992	25563648	1789455
RAS	900	673	5751821	402627
Blowers:	29700	22216	189810086	13286706
Total Power Cost ($):				17093303

TOTAL O & M COST ($): 26747543

TOTAL COST SUMMARY

INCREMENTAL CONSTRUCTION COST SUMMARY FOR BACKRIVER WWTP, X $1000

COST ITEM		HLND	LLND
Tankage requirements	$	12364	27901
Mixers	$	1498	6235
Clarifiers	$	15438	15438
Pumps-ARCY, RAS, Bldg. for pumps	$	1194	1740
Alum Feed	$	502	578
Supernatant System	$	584	584
Blowers & Duffusers	$	19406	24507
Eff. Filter-Pumps, Structure, Media	$	----	----
SUBTOTAL		50986	76983
Non Component Cost (1)		32760	48931
TOTAL CONSTRUCTION		83746	125914
Eng. & Const. Supervision(19%) (2)		15912	23924
SUBTOTAL		99658	149838
Contingencies(20%)		19932	29968
Interest during construction(1/2PCI)		10464	15733
TOTAL CAPITAL COST		130054	195538

NOTES:
(1) Non-Component cost includes electrical, instrumentation, yard piping, site preparation & misc. work, and retrofit-construction added cost.
(2) Engineering(10%), construction supervision(9%).

INCREMENTAL O & M COST SUMMARY

ITEM	HLND	LLND
Maintenance & Materials	3902	5866
Labor	1750	1750
Chemicals	765	2038
Power	12267	17093
SUBTOTAL	18684	26747
TOTAL ANNUAL COST(1)	32795	47963

NOTES:
(1) Total annual cost is O & M cost and annualized capital using 0.1085 capital recovery factor at 8.875 % interest rate.

APPENDIX D-8

BLUE PLAINS WASTEWATER TREATMENT PLANT

TABLE OF CONTENTS

SECTION	PAGE
1.0 Description of Existing Facilities	1
2.0 Proposed Plant Modifications	8
3.0 Proposed Retrofiting for Biological Nutrient Removal	10
4.0 Total Cost Summary	16

APPENDIX D-8

BLUE PLAINS WASTEWATER TREATMENT PLANT

1.0 DESCRIPTION OF EXISTING FACILITIES

Construction of Advanced Waste Treatment (AWT) facilities at the Blue Plains WWTP began in 1972 and the new facilities were placed into operation in 1983. The plant was designed for an average daily flow of 309 mgd. The existing treatment facility consists of primary treatment followed by secondary treatment and nitrification using air-activated sludge. Coarse bubble diffusers are used for aeration in secondary treatment and deep multi-stage reactors equipped with sparged-air turbines are used for nitrification. The nitrified effluent is filtered through dual-media filters and disinfected prior to its discharge to the Potomac River. Chemicals are added at multiple locations in the treatment system. These include ferric chloride for phosphorus removal in the primary sedimentation tanks, waste pickle liquor and ferric chloride in the secondary sedimentation tanks and lime for pH adjustment in the nitrification reactors. Storm water flows to the Blue Plains WWTP exceeding 650 MGD receive partial treatment consisting of screening, grit removal, primary sedimentation and chlorination before its discharge to the river.

Primary sludge in the existing facility is gravity thickened; waste secondary sludge and waste nitrified sludge are thickened by dissolved-air flotation. Thickened primary sludge is anaerobically digested and the digested sludge is elutriated in the flotation thickeners, then polymer-conditioned and centrifugally-dewatered. The dewatered digested sludge is limed and hauled to an offsite location. Thickened excess primary sludge, waste secondary sludge and waste nitrified sludge are conditioned with lime and ferric chloride and dewatered on vacuum filters.

Figure D.8.1 is a schematic showing the existing and expanded liquid stream unit processes. Figure D.8.2 is the layout for the wastewater treatment plant. Figure D.8.3 and D.8.4 are the process flow schemes proposed to meet the levels of High Level Nutrient Discharge (HLND) and Low Level Nutrient Discharge (LLND).

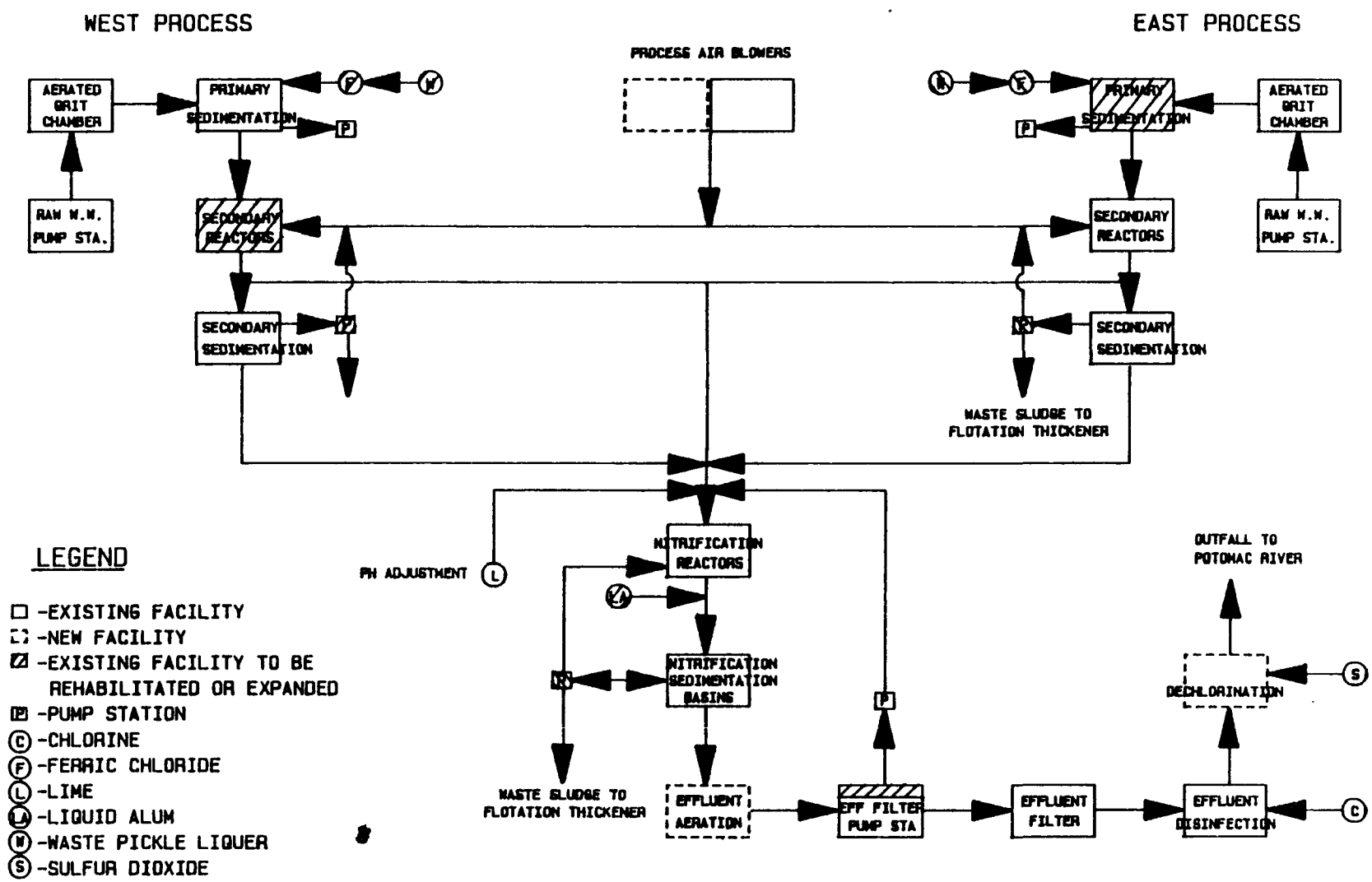

FIGURE D.8.1 EXISTING AND EXPANDED FLOW DIAGRAM FOR BLUE PLAINS WWTP

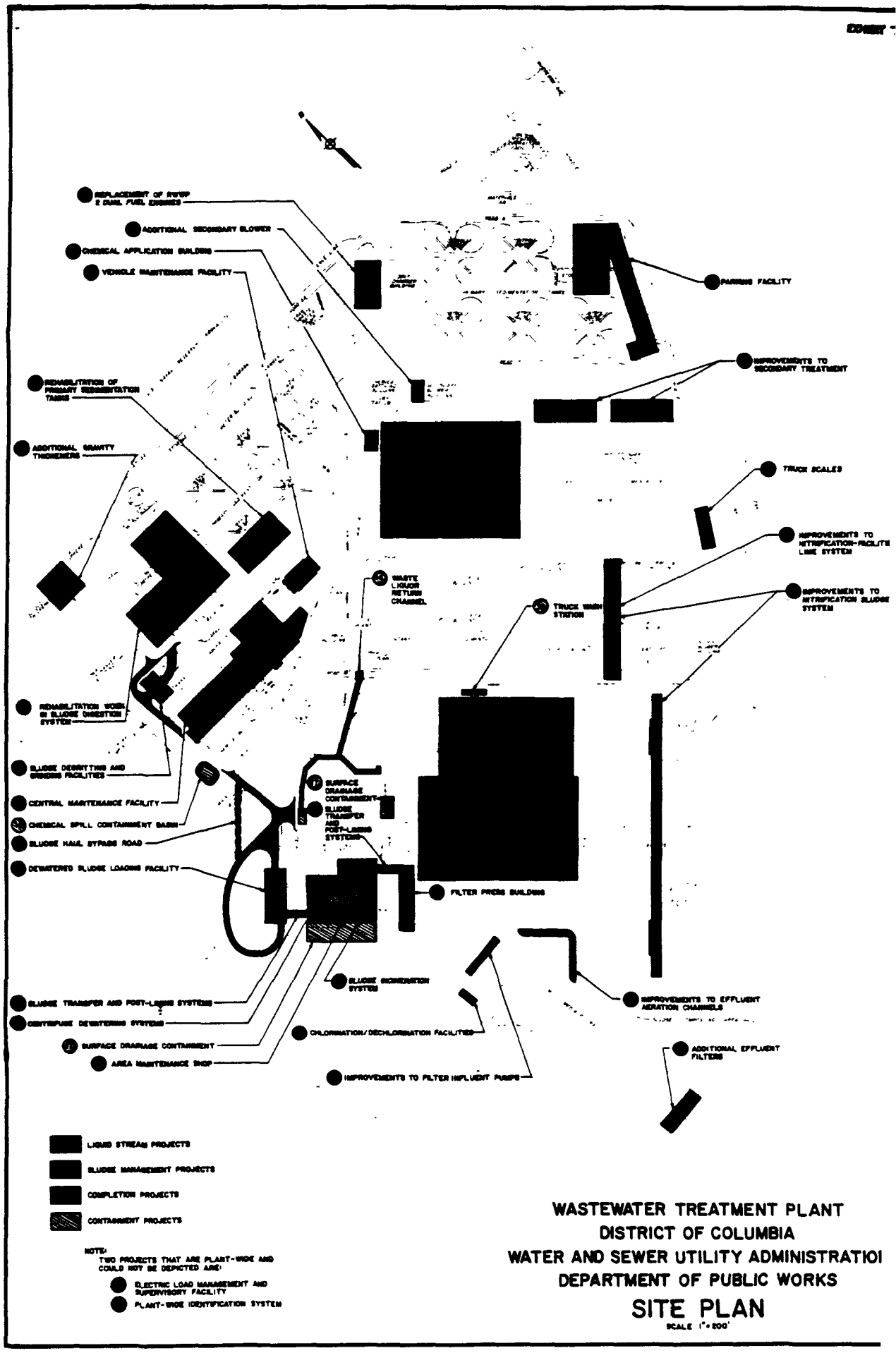
REPLACEMENT OF RWPP 2 DUAL FUEL ENGINES
ADDITIONAL SECONDARY BLOWER
CHEMICAL APPLICATION BUILDING
VEHICLE MAINTENANCE FACILITY
PARKING FACILITY
IMPROVEMENTS TO SECONDARY TREATMENT
REHABILITATION OF PRIMARY SEDIMENTATION TANKS
ADDITIONAL GRAVITY THICKENERS
TRUCK SCALES
IMPROVEMENTS TO NITRIFICATION-FACILITY LIME SYSTEM
WASTE LIQUOR RETURN CHANNEL
TRUCK WASH STATION
IMPROVEMENTS TO NITRIFICATION SLUDGE SYSTEM
REHABILITATION WORK IN SLUDGE DIGESTION SYSTEM
SLUDGE DEGRITTING AND GRINDING FACILITIES
CENTRAL MAINTENANCE FACILITY
CHEMICAL SPILL CONTAINMENT BASIN
SLUDGE HAUL STRAIGHT ROAD
DEWATERED SLUDGE LOADING FACILITY
SURFACE DRAINAGE CONTAINMENT
SLUDGE TRANSFER AND POST-LIMING SYSTEMS
FILTER PRESS BUILDING
SLUDGE INCINERATION SYSTEM
IMPROVEMENTS TO EFFLUENT AERATION CHANNELS
SLUDGE TRANSFER AND POST-LIMING SYSTEMS
CENTRIFUGE DEWATERING SYSTEMS
CHLORINATION/DECHLORINATION FACILITIES
SURFACE DRAINAGE CONTAINMENT
AREA MAINTENANCE SHOP
ADDITIONAL EFFLUENT FILTERS
IMPROVEMENTS TO FILTER INFLUENT PUMPS
LIQUID STREAM PROJECTS
SLUDGE MANAGEMENT PROJECTS
COMPLETION PROJECTS
CONTAINMENT PROJECTS
NOTE:
TWO PROJECTS THAT ARE PLANT-WIDE AND COULD NOT BE DEPICTED ARE:
ELECTRIC LOAD MANAGEMENT AND SUPERVISORY FACILITY
PLANT-WIDE IDENTIFICATION SYSTEM
WASTEWATER TREATMENT PLANT
DISTRICT OF COLUMBIA
WATER AND SEWER UTILITY ADMINISTRATIOI
DEPARTMENT OF PUBLIC WORKS
SITE PLAN
SCALE 1"=200'

Figure D.8.2

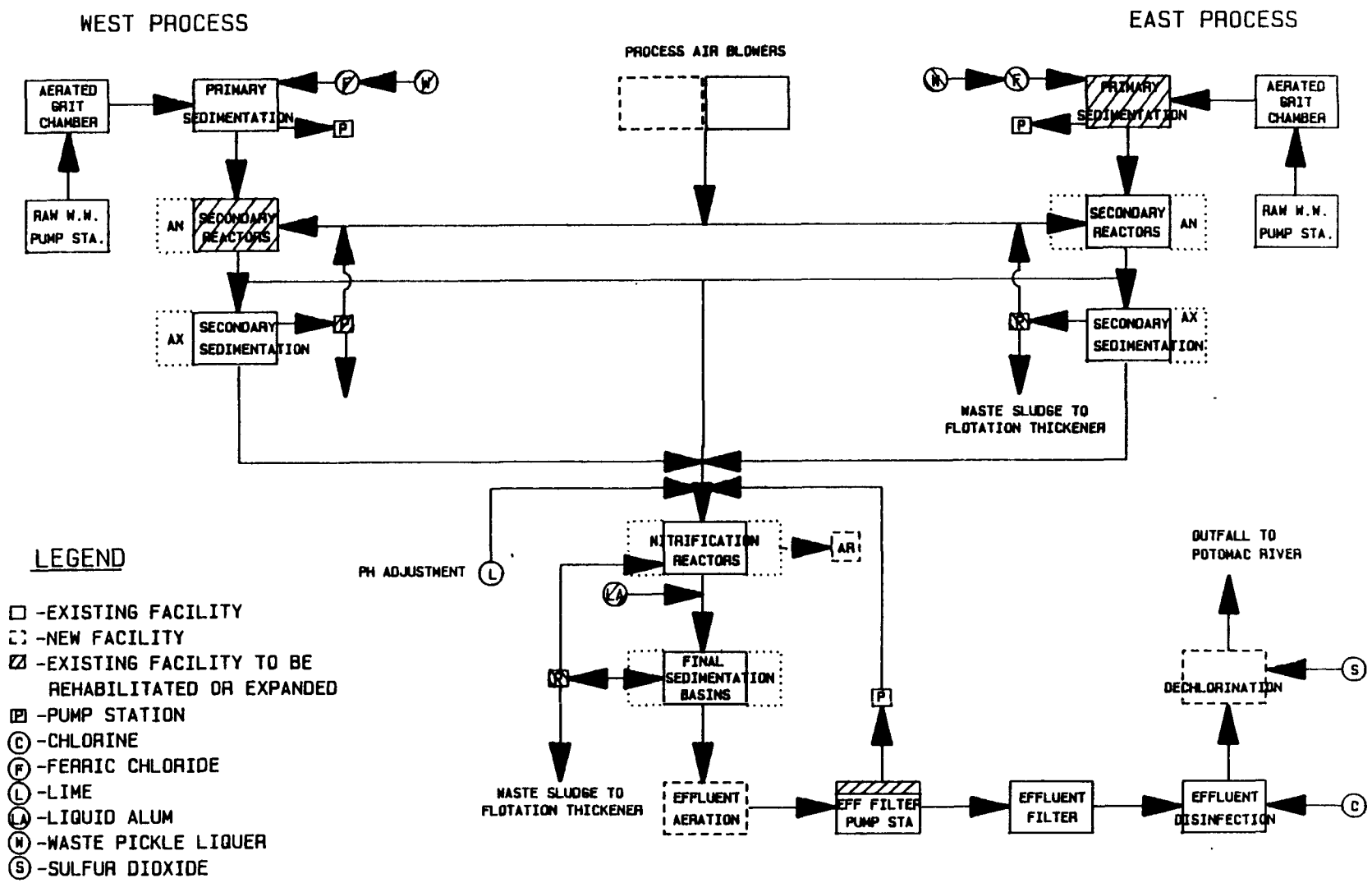

FIGURE D.8.3 PROPOSED FLOW DIAGRAM FOR BLUE PLAINS WWTP (HLND)

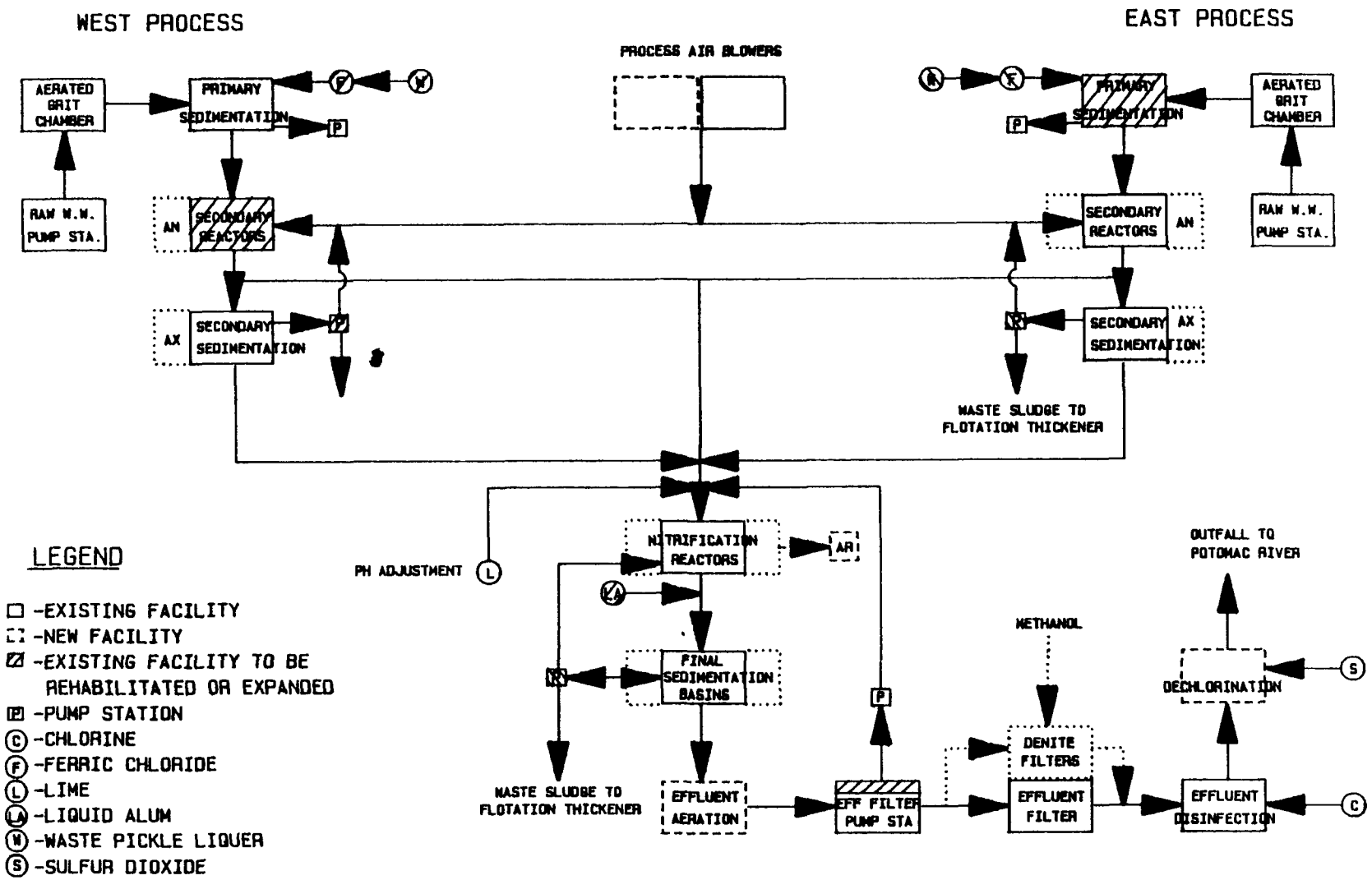

FIGURE D.8.4 PROPOSED FLOW DIAGRAM FOR BLUE PLAINS WWTP (LLND)

The present design flow and wastewater characteristics are described below:

The treatment plant is designed for an average dry weather flow of 309 MGD with a maximum flow capacity of 650 MGD. Primary clarification capacity is provided to treat an additional 289 MGD of storm generated combined sewer flows. Table D.8.1 summarizes the influent and effluent wastewater parameters and the current NPDES permit requirements. The plant has a 1 mg/l ammonia nitrogen limit in summer months and 6.5 mg/l ammonia nitrogen from December to April. The current plant performance is excellent in meeting effluent limitations including BOD, solids, and nutrients.

The existing plant component and unit sizes are presented below:

Screening:	Mechanical bar screens, 1" clear opening capable of handling 900 mgd.
Pumping:	6 pumps, total capacity of 400 mgd. 9 pumps, total capacity of 100 mgd, 3 of which are run by internal combustion engines.
Grit Removal:	16 units each at detention time of 3.4 minutes at maximum flow of 673 mgd.
Primary Treatment:	20 clarifiers on east side, each 106 feet dia. X 13.7 feet deep; surface area 226,200 sqft, capacity 24.16 MG.
	16 clarifiers on west side, each 106 feet dia. X 13.7 feet deep, surface area 141,200 sqft, capacity 14.44 MG.
Secondary Treatment:	2 tanks, 4 passes/tank, each 460 ft (length) X 29 ft (width) X 15 ft (depth). 2 tanks, 4 passes/tank, each 119 ft (length) X 20 ft (width) X 15 ft (depth). Total detention time 2 hrs (at a flow of 309 mgd).

Chemical Addition:	Alum feed rate of up to 83,900 gals/day or ferric chloride feed rate up to 49,500 gpd.
Secondary Sedimentation:	12 tanks on east side each 248,000 sqft surface area. 12 tanks on west side each 237,000 sqft. Average detention time of 2.7 hours.
Nitrification Reactors:	12 tanks; each 80 feet W X 249 feet L X 30.9 feet D, 59 stages in each tank with average detention time of 4 hours; 55.18 MG capacity.
Nitrification Sedimentation Tanks:	28 tanks, each 79 feet W, 242 feet L X 15.5 feet D; average detention time of 4.5 hours; 535,300 sqft surface area.
Air Blowers:	5 blowers
Auxiliary Sedimentation Tanks:	8 each, 153,000 sqft.
Filter Influent Pumps:	10 each
Mixed Media Filters:	36 gravity flow units; 74,800 sqft 4 additional, 8,320 sqft. Total surface area 80,200 sqft.
Disinfection Capacity:	740 MGD: chlorine contact tanks have detention period of 48 minutes at average flow.
Sludge Thickners:	8 tanks, each 65 feet dia. X 10 feet D; 26,546 sqft total.

Flotation Thickners:	18 units, each 20 feet W X 59 feet L X 14 feet D; 19,800 sqft total.
Sludge Digestion:	12 fixed cover tanks; total volume 1,710,000 cuft. Sludge gas is used to heat 63,000,000 BTU/hr heat exchangers to maintain contents at 95°F.
Elutriation Tanks:	4 tanks; total volume of 100,000 cuft.
Vacuum Filtration:	30 filters, up to 2400 tons/day sludge containing 15% to 20% solids.

2.0 PROPOSED PLANT MODIFICATIONS

Feasibility studies were carried out in accordance with the Administrative Order issued by the U.S. Environmental Protection Agency (EPA) to the District of Columbia examining wastewater treatment needs through the year 2005. The study examined expanding the existing treatment facility to meet future needs, diverting future wastewater flows for treatment to other locations both within and outside the Blue Plains area, water quality modeling and examination of the impact of adjacent wastewater treatment plants.

The studies indicated that the existing treatment works at Blue Plains, with improvements, have the capacity to treat annual average wastewater flows of 310 MGD to meet the existing NPDES permit which expires on October 29, 1991.

Estimates of future needs indicate that the Blue Plains service area will require treatment capacity for annual average wastewater quantities of about 370 MGD. Flow diagrams for the expanded liquid process and solids process facilites is shown on Figures D.8.1.
Major improvements in the liquid process includes the conversion of secondary aeration tanks to step aeration and that the denitrification area be converted to additional sedimentaion basins and sludge composting.

TABLE D.8.1

BLUE PLAINS WWTP RAW SEWAGE AND EFFLUENT CHARACTERISTICS
(SEPTEMBER 1984 to July 1987)

Parameter	Influent	Effluent	NPDES Permit
TSS, mg/l	142	1.5	7.0
BOD_5, mg/l	132	1.5	5.0
TP, mg/l	4.2	0.12	0.18
TKN, mg/l	23.8	0.735	N/A
NH_3-N, mg/l	12.1	0.5	1.0 (5/1 - 11/30) 6.5 (12/1 - 4/30)
NO_3-N, mg/l	--	11.7	N/A
NO_2-N, mg/l	--	0.010	N/A
D.O., mg/l	--	--	4.0 (not less than)
pH	--	--	6 - 8.5
Total Cl_2, mg/l	--	--	0.02
Zinc, ppb	--	14.0	N/A
Mercury, ppb	--	0.100	N/A
Copper, ppb	--	5.80	N/A
Chromium (Hex.), ppb	--	14.40	N/A
Cadmium, ppb	--	0.422	N/A
Iron, mg/l	--	0.150	N/A
Lead, ppb	--	4.88	N/A

3.0 PROPOSED RETROFITTING FOR BIOLOGICAL NUTRIENT REMOVAL

The current NPDES permit requires 0.18 mg/l of phosphorus year round and 1.0 mg/l and 6.5 mg/l of ammonia nitrogen in summer and winter respectively. The treatment plant performance is excellent so far and has facilities for nitrification for ammonia removal and chemical addition for phosphorous removal. Nutrient levels are currently well under the discharge requirements. Selecting a low level biological nutrient removal system would require much more tankage than the high level design and for 309 MGD, would be very costly.

For the HLND requirements , the design calls for the addition of areation basins where as the volume requirements for the anaerobic and anoxic Zones could be accommodated internally. Addition of secondary clarifiers would be necessary to obtain an overall overflow rate of 600 gpd/sq ft. Additional blower would be necessary to meet oxygen demand at a higher peaking factor. For the low level discharge requirements, the plant visits indicated that land availabilty to accomodate the five (5) stage Bardenpho Process is not feasible. Alternatively, the LLND discharge requirements could be achieved by a three (3) stage A_2O Process with alum addition and converting the existing filters to deep bed denitrification filters with methanol addition facilities.

The cost estimates for HLND and LLND requirements are presented as follows:

HIGH LEVEL NUTRIENT DISCHARGE (TP = 2 mg/l; TN = 8 mg/l)

INCREMENTAL CONSTRUCTION COST

TANKAGE REQUIREMENT SUMMARY FOR HLND RETROFIT

	Tankage Required 1000 cu.ft.	Req'mts Met by Exist. Tk 1000 cu.ft.	Addl'n Tkg. Reqd.	Surf. Area Reqd. sq. ft.	Land Area Available sq. ft.
Anaerobic(1Hr.)	2629	2629	-	-	
Anoxic(1Hr.)	2629	2629	-	-	
Aerobic(6Hr.)	15775	11573	4202	140400	
Total	21033	16831	4202	140400	350400

TANKAGE REQUIREMENTS:(16" WALL, 14" BASE SLAB AND 8" BAFFLES)

	Anaerobic Tankage	Anoxic Tankage	Aerobic Tankage
No. of Tanks	0	0	6
No. of passes/tank	0	0	3
Length per pass (ft)	0	0	260
Width per pass (ft)	0	0	30
Depth per pass (ft)	0	0	31
Total volume (cu.ft.)	0	0	4352400
No. of baffles/tank	0	0	2

MIXER REQUIREMENTS:

	Anaerobic Tankage	Anoxic Tankage
Volume of tanks (MG)	19.66	19.66
H.P. required (@ 50 HP/MG)	983	983
No. of Mixers (10 HP/mixer)	98	98
No. of standby mixers	20	20
Total no. of mixers	118	118
No. of mixers existing	0	0
No. of mixers required	118	118

AERATION REQUIREMENTS (Appendix C-8)

Plant design flowrate (MG)	472.00
Plant Influent BOD (mg/l)	102.00
Aeration Influent BOD (mg/l)	70.00
Plant Effluent BOD (mg/l)	1.10
BOD loading (mg/l)	69
Ammonia loading (mg/l)	12
Oxygen required (lbs/MG)	1092
Air required (SCFM)	345974
Air required (SCFM) (@ peaking factor of 2.1)	726545
Existing capacity (SCFM)	539056
Additional air required (SCFM)	187489

CLARIFIERS REQUIREMENT:

To get over flow rate of 600 gpd/sq.ft;

Surface area required:	786667 sq.ft.
Existing surface area available:	535304 sq.ft.
Additional surface area required:	251363 sq.ft.

No. of clarifiers	12
Channels/tank	3
Diameter	n/a
Length	300 ft.
Width	25 ft.
Depth	18 ft.

PUMPING REQUIREMENT:

	Existing Capacity		Additional Capacity Required	
	(mgd)	(gpm)	(mgd)	(gpm)
ARCY PUMPS @ 200%Q	0	0	944	655551
RAS PUMPS @ 75%Q	142	98610	212	147221

COST CALCULATIONS:

TANKAGE CONCRETE COST:

	Anaerobic Tankage	Anoxic Tankage	Aerobic Tankage
Concrete volumes:			
sidewalls (cu.yd.)	0	0	796
endwalls (cu.yd.)	0	0	276
base slab (cu.yd.)	0	0	1072
Concrete vol./tank (cu.yd.)	0	0	2144
Vol. of baffles (cu.yd.)	0	0	398
Concrete Cost per tank (@ $342.50/cu.yd. for concrete; $300.00/cu.yd. for baffles)	0	0	853720
Total concrete cost ($)	0	0	5122320
Total concrete cost for additional tankage ($).	5122320		

MIXER COST:

	Anaerobic Tankage	Anoxic Tankage
Cost of mixers ($) (@ $12,000 per mixer)	1416000	1416000
Installation cost ($) (@ 20% of mixer cost)	283200	283200
Installed mixer cost ($)	1699200	1699200
Total installed mixer cost ($)		3398400

PUMP COST: (ARCY, RAS AND PUMP BUILDING)	No. of Pumps	Unit Cost($)	Total Cost($)
ARCY PUMP:			
72,000 gpm pumps each	13	100000	1300000
RAS PUMP:			
24,500 gpm pump each	9	55000	495000
Subtotal	22		1795000
Installation(20%)			359000
Subtotal			2154000
Pump building(60' x 100') @ ($40/sq.ft.)			240000
Total cost ($)			2394000

CLARIFIER TANKAGE CONCRETE COST:

Concrete volumes:	
sidewalls (cu.yd.)	12800
endwalls (cu.yd.)	1600
base slab (cu. yd.)	12453
Concrete volume (cu.yd.)	26853
Concrete Cost (@ $342.50/cu.yd. for concrete:	9197153
Equipment cost @ 40%	3678861
Installation @ 20%	1839431
Total cost for clarifiers ($)	14715444

BLOWERS & DIFFUSERS COST

	QTY.	SCFM	COST EACH($)	CONTROL PKG.($)	TOTAL COST($)
Blowers	10.00	20000	120000	0	1200000
Installation @ 20%					240000
Diffusers @ $30 per SCFM					6000000
Total installed cost ($)					7440000

ANAEROBIC DIGESTION SUPERNATANT SYSTEM COST:

Total cost ($) (Appendix C-15)	1032440

ALUM FEED SYSTEM COST:

Total cost ($) (Appendix C-17)	1132800

TOTAL EQUIPMENT COST ($): 35234000

INCREMENTAL O & M COST SUMMARY:

Maintenance and materials cost: (3% of total construction)	2682300
Labor cost:(current plant budget = $16,872,000) 25% of existing budget is labor cost	4218000
Chemicals: Includes Lime & Alum addition	1728310

Power:

	HP	kW	kWHr/ YEAR	Cost @ $0.07/kWHr.
Mixers	1966	1471	12882176	901752
Pumps:				
ARCY	5200	3890	34072896	2385103
RAS	1350	1010	8845848	619209
Blowers:	9000	6732	58972320	4128062
Total power cost ($):				8034127

TOTAL O & M COST ($): 16662737

LOW LEVEL NUTRIENT DISCHARGE (TP = 0.5 mg/l; TN = 3 mg/l)

INCREMENTAL CONSTRUCTION COST

TANKAGE REQUIREMENT SUMMARY FOR LLND RETROFIT

	Tankage Required 1000cu.ft.	Req'mts Met by Exist Tkg. 1000cu.ft.	Addl'n Tkg. Reqd. 1000cu.ft.	Surf. Area Reqd. sq.ft.	Land Area Available sq.ft.
Anaerobic(2Hr)	5258	0	5258		
1st Anoxic(3Hr)	7887	0	7887		
Aerobic(9Hr)	23661	16831	6830		
2nd Anoxic(3Hr)	7887	0	7887		
Rearation(1Hr)	2629	0	2629		
Total	47322	16831	30491	983580 *	377856

* Based on an average depth of 31 ft.

From the above table it is determined that due to the shortage of land availability it will not be feasible to retrofit the 5 stage Bardenpho process to meet the LLND limits.

Alternatively the LLND limits can be achieved by retrofiting the 3 stage A2O process with alum addition and converting the existing filters to deep bed denitrification filters with methanol addition facilities.

Total equipment cost for HLND ($)	35234000
Equipment cost for denitrification filters ($)	23574000
TOTAL EQUIPMENT COST ($):	58808000

* NOTE: The cost provided for the denitrification filters is not site specific but based on a generic retrofit.

TOTAL COST SUMMARY

INCREMENTAL CONSTRUCTION COST SUMMARY FOR BLUE PLAINS WWTP, X $1000

COST ITEM		HLND	LLND
Tankage requirements	$	5122	5122
Mixers	$	3398	3398
Clarifiers	$	14715	14715
Pumps-ARCY, RAS, Bldg. for pumps	$	2394	2394
Alum Feed	$	1133	1133
Supernatant System	$	1032	1032
Blowers & Duffusers	$	7440	7440
Eff. Filter-Pumps, Structure, Media	$	----	23574
SUBTOTAL		35234	58808
Non Component Cost (1)		22340	57701
TOTAL CONSTRUCTION		57574	116509
Eng. & Const. Supervision(19%) (2)		10939	22137
SUBTOTAL		68513	138646
Contingencies(20%)		13703	27729
Interest during construction(1/2PCI)		7194	14558
TOTAL CAPITAL COST		89410	180933 (3)

NOTES:
(1) Non-Component cost includes electrical, instrumentation, yard piping, site preparation & misc. work, and retrofit-construction added cost.
(2) Engineering(10%), construction supervision(9%).
(3) This cost is not based on a site specific evaluation.

INCREMENTAL O & M COST SUMMARY

ITEM	HLND	LLND
Maintenance & Materials	2682	5428
Labor	4218	4218
Chemicals	1728	7927
Power	8034	8057
SUBTOTAL	16662	25630
TOTAL ANNUAL COST(1)	26363	45261

NOTES:
(1) Total annual cost is O & M cost and annualized capital using 0.1085 capital recovery factor at 8.875 % interest rate.