PB 278 777
EPA-600/2-77-107o
December 1977

Environmental Protection Technology Series

ENVIRONMENTAL
PROTECTION
AGENCY
DALLAS, TEXAS
LIBRARY

RESEARCH REPORTING SERIES

Research reports of the Office of Research and Development, U.S. Environmental Protection Agency, have been grouped into nine series These nine broad categories were established to facilitate further development and application of environmental technology Elimination of traditional grouping was consciously planned to foster technology transfer and a maximum interface in related fields. The nine series are

1 Environmental Health Effects Research
2 Environmental Protection Technology
3. Ecological Research
4 Environmental Monitoring
5. Socioeconomic Environmental Studies
6 Scientific and Technical Assessment Reports (STAR)
7 Interagency Energy-Environment Research and Development
8 "Special" Reports
9 Miscellaneous Reports

This report has been assigned to the ENVIRONMENTAL PROTECTION TECHNOLOGY series. This series describes research performed to develop and demonstrate instrumentation, equipment, and methodology to repair or prevent environmental degradation from point and non-point sources of pollution. This work provides the new or improved technology required for the control and treatment of pollution sources to meet environmental quality standards

This document is available to the public through the National Technical Information Service, Springfield, Virginia 22161.

EPA-600/2-77-107o
December 1977

SOURCE ASSESSMENT: POLYCHLOROPRENE State of the Art

by

D. A. Horn, D. R. Tierney, and T. W. Hughes
Monsanto Research Corporation
Dayton, Ohio 45407

Contract No. 68-02-1874

Project Officer

Ronald J. Turner
Industrial Pollution Control Division
Industrial Environmental Research Laboratory
Cincinnati, Ohio 45268

INDUSTRIAL ENVIRONMENTAL RESEARCH LABORATORY
OFFICE OF RESEARCH AND DEVELOPMENT
U.S. ENVIRONMENTAL PROTECTION AGENCY
CINCINNATI, OHIO 45268

DISCLAIMER

This report has been reviewed by the Industrial Environmental Research Laboratory - Cincinnati, U.S. Environmental Protection Agency, and approved for publication. Approval does not signify that the contents necessarily reflect the views and policies of the U.S. Environmental Protection Agency, nor does mention of trade names or commercial products constitute endorsement or recommendation for use.

FOREWORD

When energy and material resources are extracted, processed, converted, and used, the related pollutional impacts on our environment and even on our health often require that new and increasingly more efficient pollution control methods be used. The Industrial Environmental Research Laboratory - Cincinnati (IERL-Ci) assists in developing and demonstrating new and improved methodologies that will meet these needs both efficiently and economically.

This report contains an assessment of air emissions from the polychloroprene industry. This study was conducted to provide a better understanding of the distribution and characteristics of emissions from polychloroprene manufacture. Data collection emphasized the accumulation of sufficient information for EPA to ascertain the need for developing control technology in this industry. Further information on this subject may be obtained from the Organic Chemicals and Products Branch, Industrial Pollution Control Division.

David G. Stephan
Director
Industrial Environmental Research Laboratory
Cincinnati

PREFACE

The Industrial Environmental Research Laboratory (IERL) of the U.S. Environmental Protection Agency (EPA) has the responsibility for insuring that pollution control technology is available for stationary sources to meet the requirements of the Clean Air Act, the Federal Water Pollution Control Act, and solid waste legislation. If control technology is unavailable, inadequate, uneconomical, or socially unacceptable, then financial support is provided for the development of the needed control techniques for industrial and extractive process industries. Approaches considered include: process modifications, feedstock modifications, add-on control devices, and complete process substitution. The scale of the control technology programs ranges from bench- to full-scale demonstration plants.

IERL has the responsibility for developing control technology for a large number (>500) of operations in the chemical and related industries. As in any technical program, the first step is to identify the unsolved problems. Each of the industries is to be examined in detail to determine if there is sufficient potential environmental risk to justify the development of control technology by IERL.

Monsanto Research Corporation (MRC) has contracted with EPA to investigate the environmental impact of various industries that represent sources of pollutants in accordance with EPA's responsibility, as outlined above. Dr. Robert C. Binning serves as MRC Program Manager in this overall program, entitled "Source Assessment," which includes the investigation of sources in each of four categories: combustion, organic materials, inorganic materials, and open sources. Dr. Dale A. Denny of the Industrial Processes Division at Research Triangle Park serves as EPA Project Officer for this series. Reports prepared in this program are of two types: Source Assessment Documents, and State-of-the-Art Reports.

Source Assessment Documents contain data on pollutants from specific industries. Such data are gathered from the literature, government agencies, and cooperating companies. Sampling and analysis are also performed by the contractor when the available information does not adequately characterize the source pollutants. These documents contain all of the information necessary for IERL to decide whether a need exists to develop additional control technology for specific industries.

State-of-the-Art Reports include data on pollutants from specific industries which are also gathered from the literature, government agencies and cooperating companies. However, no extensive sampling is conducted by the contractor for such industries. Sources in this category are considered by EPA to be of insufficient priority to warrant complete assessment for control technology decisionmaking. Therefore, results from such studies are published as State-of-the-Art Reports for potential utility by the government, industry, and others having specific needs and interests.

This study of polychloroprene plants was initiated by IERL-Research Triangle Park in March 1975. Mr. Kenneth Baker served as EPA Project Leader. The project was transferred to the Industrial Pollution Control Division, IERL-Cincinnati, in October 1975; Mr. Ronald J. Turner served as EPA Project Leader from that time through completion of the study.

ABSTRACT

This document reviews the state of the art of air emissions from polychloroprene manufacture. The composition, quality, and rate of emissions, and their environmental effects are described.

Polychloroprene, generically called "neoprene," is a synthetic rubber produced by the emulsion polymerization of 2-chloro-1,3-butadiene (chloroprene). The monomer, chloroprene, is produced by chlorination of butadiene with subsequent isomerization and dehydrochlorination. Hydrocarbons such as chloroprene and toluene are emitted from storage tanks, refining columns, wash belts, dryers, and batch polykettles. Particulates are emitted during the dusting of neoprene rope with talc. Hydrogen chloride emissions result from the incineration of waste chlorinated hydrocarbons. Nitrogen oxides are emitted from vacuum column jets.

To assess the severity of emissions from this industry a representative plant was defined based on specific mean values for various plant parameters. Source severity was defined as the ratio of the time-averaged maximum ground level concentration of a pollutant to the primary ambient air quality standard for criteria pollutants or to a reduced threshold limit value for noncriteria pollutants. For a representative plant, source severities for particulates, hydrocarbons, nitrogen oxides, chloroprene, toluene, hydrogen chloride, and talc are 0.03, 23, 0.1, 4.3, 0.4, 0.9, and 3.4, respectively.

A decrease of about 25% in hydrocarbon emissions from this industry is expected over the period 1976 to 1981. Polychloroprene manufacture contributes to the national emissions of particulates, hydrocarbons, and nitrogen oxides in the amounts of 0.0001%, 0.008%, and <0.0001%, respectively.

Hydrocarbon emissions have been controlled through a combination of process modifications, brine-cooling systems, and nitrogen blankets in pressurized storage tanks. Particulates emitted in the talc dusting area may be controlled by exhaust systems in conjunction with wet scrubbers or fabric filters. Hydrogen chloride emissions can be reduced by falling film absorbers and packed scrubbers.

This report was submitted in partial fulfillment of Contract No. 68-02-1874 by Monsanto Research Corporation under the sponsorship

of the U.S. Environmental Protection Agency. This report covers the period March 1975 to July 1977, and work was completed as of July 1977.

CONTENTS

Foreword iii
Preface iv
Abstract vi
Figures x
Tables xi
Abbreviations and Symbols xii
Conversion Factors and Metric Prefixes xiii

1. Introduction 1
2. Summary 2
3. Source Description 6
   Process description 6
   Materials flow 21
   Geographic distribution 24
4. Emissions 25
   Selected pollutants and their characteristics . . 25
   Emission factors 25
   Definition of a representative source 28
   Environmental effects 28
5. Control Technology 36
   Hydrocarbons 36
   Hydrogen chloride 41
   Particulates (talc) 41
6. Growth and Nature of the Industry 50
   Present technology 50
   Emerging technology 50
   Industry production trends 50

References 53
Appendices

A. Calculation of emission height 57
B. Individual plant emission rates 61
C. Derivation of source severity equations 64
D. Comments by E. I. du Pont de Nemours & Company on draft source assessment document: polychloroprene state-of-the-art 78

Glossary 83

FIGURES

Number		Page
1	Chloroprene process flow diagram	9
2	Schematic flow diagram for the disposal of chlorinated hydrocarbon wastes	[illegible]
3	Schematic diagram of the Incinerator-Scrubber . .	14
4	Neoprene process flow diagram	18
5	Chloroprene process material balance	22
6	Neoprene process material balance	23
7	Locations of polychloroprene (neoprene) plants . .	24
8	Hydrocarbon concentration as a function of distance downwind from a representative plant	35
9	Particulate concentration as a function of distance downwind from a representative plant	35
10	Brine-cooling system for neoprene strippers . . .	37
11	Combined control system for batch polykettles . .	39
12	Falling film absorption system	42
13	Centrifugal spray scrubbers	45
14	Impingement plate scrubber	46
15	Venturi scrubber	46
16	Centrifugal fan wet scrubber	48
17	Neoprene product and consumption trends	52

TABLES

Number		Page
1	Neoprene and 3,4-Dichloro-1-butene Plant Locations	2
2	Source Severities and Emission Factors for a Representative Plant	5
3	Physical Properties of Chloroprene, Its Intermediates and Raw Materials	8
4	Polymerization Recipe for Neoprene	19
5	Differences in Neoprene Types	21
6	Neoprene Plant Locations	24
7	Characteristics of Emissions from Neoprene Manufacturing Plants	26
8	Neoprene Manufacturing Emission Factors by Compound	26
9	Neoprene Manufacturing Emission Factors	27
10	Time-Averaged Maximum Ground Level Concentrations by Compound	29
11	Time-Averaged Maximum Ground Level Concentrations	30
12	Source Severities for Criteria Pollutants and Chemical Species	31
13	Source Severities	32
14	Contribution of Neoprene Production to State Emissions of Criteria Pollutants	33
15	Contribution of Neoprene Production to 1976 National Emissions of Criteria Pollutants	34
16	Affected Area and Affected Population	34
17	Control Devices and their Efficiencies in the Neoprene Industry	40
18	Neoprene End Uses	51

ABBREVIATIONS AND SYMBOLS

D -- distance from the source to the nearest plant boundary
e -- 2.72
E -- emission factor, g/kg
F -- hazard factor
H -- emission height, m
$\bar{H}$ -- average emission height, m
P -- production rate, kg/s
Q -- mass emission rate, g/s
S -- source severity
t -- averaging time
t_o -- short term averaging time
TLV® -- threshold limit value
u -- wind speed, m/s
$\bar{u}$ -- average wind speed, m/s
y -- horizontal distance from centerline of dispersion, m
χ -- downwind ground level concentration at reference coordinate x and y
χ_{max} -- maximum ground level concentration
$\bar{\chi}$ -- mean ambient concentration
$\bar{\chi}_{max}$ -- time-averaged maximum ground level concentration
ΔP -- change in pressure
π -- 3.14
σ_y -- standard deviation of horizontal dispersion, m
σ_z -- standard deviation of vertical dispersion, m

CONVERSION FACTORS AND METRIC PREFIXES[a]

CONVERSION FACTORS

To convert from	to	Multiply by
degree Celsius (°C)	degree Fahrenheit (°F)	$t_{°F} = 1.8\ t_{°C} + 32$
gram/kilogram (g/kg)	pound/ton	2.000
kilogram (kg)	pound-mass (lb mass avoirdupois)	2.205
meter (m)	foot	3.281
meter (m)	inch	3.937×10^{1}
meter^2 (m^2)	mile^2	3.861×10^{-7}
meter^3 (m^3)	foot^3	3.531×10^{1}
metric ton	ton (short, 2,000 lb mass)	1.102
pascal (Pa)	inch of water (60°F)	4.019×10^{-3}
pascal (Pa)	pound-force/inch^2 (psi)	1.450×10^{-4}
second (s)	minute	1.667×10^{-2}

PREFIXES

Prefix	Symbol	Multiplication factor	Example
kilo	k	10^3	$1\ km = 1 \times 10^3\ m$
milli	m	10^{-3}	$1\ mm = 1 \times 10^{-3}\ m$
micro	μ	10^{-6}	$1\ \mu m = 1 \times 10^{-6}\ m$
nano	n	10^{-9}	$1\ nm = 1 \times 10^{-9}\ m$

[a] Metric Practice Guide. ASTM Designation: E 380-74, American Society for Testing and Materials, Philadelphia, Pennsylvania, November 1974. 34 pp.

SECTION 1

INTRODUCTION

Polychloroprene, generically called "neoprene," is produced in two process stages. In the first stage, the monomer preparation stage, butadiene is chlorinated, isomerized, and dehydrochlorinated to produce the monomer, chloroprene. The second stage consists of the emulsion polymerization of chloroprene to form neoprene latex. This latex is then processed and the resulting polymer isolated.

The purpose of this report is to assess the atmospheric emissions from the manufacture of neoprene. This is accomplished by determining the type, quantity, and location of emissions in the neoprene production process. The information in this document has been taken from the open literature, contacts with pertinent government agencies, and personal communications with representatives of the neoprene industry.

The principal findings of this study are summarized in Section 2. Section 3 describes the production of neoprene from the chlorination of butadiene to the final stages of roping and bagging the neoprene polymer. Section 4 provides data on emissions: their composition, quantity, and location, ground level concentrations, source severities, and affected population. The control of emissions from neoprene manufacture is described in Section 5, while the growth and nature of the industry is discussed in Section 6.

SECTION 2

SUMMARY

Polychloroprene, generically called "neoprene," is a synthetic rubber. The monomer, chloroprene, is produced by chlorinating butadiene to give a mixture of dichlorobutene isomers. These isomers are converted by isomerization to 3,4-dichloro-1-butene, which is dehydrochlorinated to chloroprene.

Chloroprene is polymerized in an emulsion polymerization system using sodium rosinate as an emulsifying agent and potassium persulfate as the initiator. The monomer batch is reacted until 65% to 100% of the chloroprene is polymerized. The emulsion, or latex, is then treated with acetic acid. The sensitized latex is passed over a freeze roll where the rubber is frozen and formed into a sheet. Subsequently, the rubber is washed, dried, roped, and bagged.

Neoprene is produced by two companies at three locations with a combined capacity of 199 x 10^3 metric tons/yr. Refined chloroprene is also produced at these three locations, while 3,4-dichloro-1-butene is produced at two locations. Another plant in Victoria, Texas produces only crude chloroprene. In Table 1, 1976 plant capacity data and plant locations for the manufacture of neoprene and 3,4-dichloro-1-butene are presented.

TABLE 1. NEOPRENE AND 3,4-DICHLORO-1-BUTENE PLANT LOCATIONS (1)

Company	Capacity, 10^3 metric tons	Location	Product
Du Pont	36	La Place, LA	Neoprene
Du Pont	136	Louisville, KY	Neoprene
Denka	27	Houston, TX	Neoprene
Du Pont	177	La Place, LA	3,4-Dichloro-1-butene[a]
Du Pont	118	Victoria, TX	3,4-Dichloro-1-butene[a]
Denka	40[b]	Houston, TX	3,4-Dichloro-1-butene

[a]All 3,4-Dichloro-1-butene produced at this location is used in-plant to produce crude chloroprene for shipment or as a feedstock in nylon production.

[b]MRC estimate.

(1) Chemical Profile: Neoprene. Chemical Marketing Reporter, 210(7):9, 1976.

The neoprene industry has been adversely affected in recent years by a shortage of chlorine and butadiene. Nevertheless, the industry has grown at an average annual rate of 5% for the five year period of 1972 through 1976. The increase in total emissions did not parallel production increases. Two neoprene plants have reduced their organic emissions by 50% to 90% to comply with state regulations regarding the control of hydrocarbon emissions. This reduction has been accomplished through process modifications and the improvement of equipment operating efficiencies.

For a 5 year period beginning in 1977, using an expected increase of 5% per annum, production capacity in 1981 is expected to be 254×10^3 metric tons.

One plant is planning to further reduce hydrocarbon emissions 50% by 1980 to comply with recent state regulations. An emission growth factor has been determined for the neoprene industry from the ratio of projected emissions in 1981 to the total emissions in 1976. This ratio is given below:

$$\frac{\text{1,479 metric tons in 1981 (emissions)}}{\text{1,943 metric tons in 1976 (emissions)}} = 0.76$$

On a statewide basis neoprene production accounts for 0.008% to 0.073% of the total hydrocarbons emitted in three states: Kentucky, Louisiana, and Texas. Neoprene manufacture contributes 0.005% of the total national hydrocarbon emissions.

Emissions from neoprene manufacturing plants include hydrocarbons (particularly chlorinated hydrocarbons), particulates (talc), nitrogen oxides, and hydrogen chloride.

Hydrocarbon emissions such as chloroprene and toluene are emitted from storage tanks, refining columns, wash belts, dryers, and batch polykettles. Particulates are emitted during the dusting of neoprene rope with talc, prior to bagging. Hydrogen chloride emissions result from the incineration of waste chlorinated hydrocarbons. Nitrogen oxides are emitted from vacuum column jets.

A representative neoprene plant was defined as one based on the chlorination of butadiene with an annual capacity of 95×10^3 metric tons. The annual production capacity of actual plants ranges from 27×10^3 metric tons to 136×10^3 metric tons. A severity factor was determined for each compound emitted. The source severity, S, is defined as the ratio of the time-averaged maximum ground level concentration, $\bar{\chi}_{max}$, (calculated by Gaussian plume dispersion methodology) to the hazard factor, F, for each material. F is defined as the ambient air quality standard for criteria pollutants or as the corrected TLV® (i.e., TLV • 8/24 • 1/100) for noncriteria emissions. Source severity values of 1.0 and greater have been found for emissions of chloroprene

and talc. Source severities greater than 1.0 were found for the specific emission points: blend tanks, strippers, tank car vents, polykettles, wash belts, and dryers.

Neoprene plants are located in counties with population densities from 27 to 716 persons/km^2. The number of persons exposed to a given severity factor was calculated using this population data in a Gaussian plume dispersion model. For an average county population density of 378 persons/km^2, a representative plant exposes 1,234 persons to a total hydrocarbon severity factor of 1.0 or greater. A source severity for particulates emitted by a representative plant indicates that 153 persons are affected by a ground level concentration of pollutant, $\overline{\chi}_{max}$, for which $\overline{\chi}/F > 0.1$.

Emission points, emission factors, source severities, and specific chemical substances emitted are given in Table 2.

Control technology for emissions from neoprene manufacture involves the abatement of hydrocarbons, particulates (talc), and hydrogen chloride. Hydrocarbon emissions have been reduced through a combination of process modifications, brine-cooling systems, water-spray chambers, oil absorption units, flares, and nitrogen blankets in pressurized storage tanks. Hydrogen chloride emissions are controlled with falling film absorbers and packed scrubbers. Particulates emitted in the talc dusting area may be controlled by exhaust systems in conjunction with wet scrubbers or fabric filters.

TABLE 2. SOURCE SEVERITIES AND EMISSION FACTORS FOR A REPRESENTATIVE PLANT

Material emitted	Emission rates, metric ton/yr	Emission factor, g/kg	Source severity
Criteria pollutants			
Particulate			
Bagger exhaust	18	0.19	0.03[a]
NO_x			
Vacuum column jet	0.09	0.001	0.1[a]
Hydrocarbons	731	7.7	23[b]
Jet vent scrubber	21	0.23	0.15
Dichlorobutene storage	0.3	0.003	0.3
Isomerizer reactor vent	0.7	0.007	0.2
Aqueous waste vent	0.6	0.006	0.03
Refined chloroprene tanks	41	0.43	0.4
Chloroprene vent condenser	1.1	0.01	0.1
Vacuum column jet	27	0.29	0.4
Recycle chloroprene tank	0.3	0.003	0.008
Blend tanks	20	0.21	4.5
Batch polykettles	105	1.1	1.6
Stripper	62	0.65	1.5
Emulsion storage tank	16	0.17	0.3
Tank car vents	20	0.21	2.0
Wash belts	18	0.19	6.7
Dryer exhaust	390	4.1	1.6
Process wastewater	3.8	0.04	0.4
Chemical substances			
Butadiene	4.5	0.05	0.0004
Chloroprene	400	4.2	4.3
Dichlorobutene	2.4	0.025	-[c]
Dodecyl mercaptan	1.0	0.011	-[c]
Toluene	219	2.3	0.4
Dimer	83	0.87	-[c]
Tetrachlorobutane	0.03	0.0003	-[c]
Talc	18	0.19	3.4
Nitrogen dioxide	0.1	0.001	0.1
Miscellaneous chemicals	27	0.28	-[c]
Acetic acid	0.2	0.003	0.0003

[a] Primary ambient air quality standard was used to calculate source severity.

[b] There is no primary ambient air quality standard for hydrocarbons. The value of 160 $\mu g/m^3$ used to calculate source severity for hydrocarbons in this report is a recommended guideline for meeting the primary ambient air quality standard for photochemical oxidants.

[c] Threshold limit value data not available, hence no source severity calculated.

SECTION 3

SOURCE DESCRIPTION

Polychloroprene is a commercial, synthetic elastomer produced by the emulsion polymerization of 2-chloro-1,3-butadiene (chloroprene). Polychloroprene has the generic name "neoprene" (2). Neoprene is marketed in both dry and latex forms (3). Domestically, two companies (Du Pont and Denka) have combined capacities of 199 x 10^3 metric tons at three plant locations.

The monomer, chloroprene, is used solely for the production of neoprene via a continuous process. Since 1972, all chloroprene production has been based on the chlorination of butadiene (4).

Monomer production and chemistry, the commercial route, and the polymerization are discussed in the following process description. Since this information has been taken from the open literature, the details may vary from actual current commercial practices.

PROCESS DESCRIPTION

Monomer Production

Chemistry--
The production of chloroprene from butadiene depends on three steps: chlorination, isomerization, and dehydrochlorination (2).

The chlorination of butadiene is a vapor-phase addition reaction:

$$CH_2{=}CH{-}CH{=}CH_2 + Cl_2 \rightarrow \underset{\underset{Cl}{|}}{CH_2}{-}\underset{\underset{Cl}{|}}{CH}{-}CH{=}CH_2 + ClCH_2{-}CH{=}CH{-}CH_2Cl \qquad (1)$$

---

(2) Kennedy, J. P. Polymer Chemistry of Synthetic Elastomers. Interscience Publishers, New York, New York, 1968. pp. 227-252.

(3) Kirk-Othmer Encyclopedia of Chemical Technology, Second Edition, Vol. 7. John Wiley and Sons, Inc., New York, New York, 1967. pp. 705-716.

(4) Brownstein, A. M. U.S. Petrochemicals, Technologies, Markets and Economics. The Petroleum Publishing Company, Tulsa, Oklahoma, 1972. pp. 258-260.

The product is 60% 3,4-dichloro-1-butene and 40% 1,4-dichloro-2-butene (both *cis* and *trans* forms) (2). Side reactions include substitution chlorination, over-chlorination, and thermal dehydrochlorination (5). Principal byproducts include chloroprene, 1-chloro-1,3-butadiene, hydrogen chloride, and high boilers (mainly tetrachlorobutane) (6-8).

The second step involves the isomerization of 1,4-dichloro-2-butene to 3,4-dichloro-1-butene:

$$ClCH_2\text{-}CH{=}CH\text{-}CH_2Cl \xrightarrow{\text{catalyst}} \underset{Cl}{CH_2}\text{-}\underset{Cl}{CH}\text{-}CH{=}CH_2 \qquad (2)$$

A copper-based catalyst, copper metal/cupric chloride ($Cu\text{-}CuCl_2$), is used commercially for the isomerization. Other catalysts that can be used include ferric, titanium (III), and aluminum chlorides, as well as other copper compounds (9).

The final step entails the dehydrochlorination of 3,4-dichloro-1-butene to chloroprene (1):

$$ClCH_2\text{-}\underset{Cl}{CH}\text{-}CH{=}CH_2 + NaOH \rightarrow CH_2{=}\underset{Cl}{C}\text{-}CH{=}CH_2 + NaCl + H_2O \qquad (3)$$

---

(5) Bellringer, F. J., and C. E. Hollis. Make Chloroprene from Butadiene. Hydrocarbon Processing, 47(11):127-130, 1968.

(6) Crocker, H. P., C. W. Capp, and F. J. Bellringer. Process for the Production of Dichlorobutenes. British Patent 798,027 (to The Distillers Company, Ltd.), July 16, 1958.

(7) Kirk-Othmer Encyclopedia of Chemical Technology, Second Edition, Vol. 5. John Wiley and Sons, Inc., New York, New York, 1967. pp. 215-231.

(8) Bellringer, F. J., and H. P. Crocker. Preparation of 3,4-Dichloro-1-butene. British Patent 800,787 (to The Distillers Company, Ltd.), September 3, 1958.

(9) Sachowicz, S. K. Production of Chloroprene. U.S. Patent 3,026,360 (to The Distillers Company, Ltd.), March 20, 1962.

The product contains 2% to 3% 1-chloro-1,3-butadiene (based on 3,4-dichloro-butene) (9). Table 3 (2, 5, 10-12) lists the physical properties of chloroprene, chloroprene intermediates, and byproducts.

TABLE 3. PHYSICAL PROPERTIES OF CHLOROPRENE, ITS INTERMEDIATES AND RAW MATERIALS (2, 5, 10-12)

Compound	Molecular weight, g/g-mole	Normal boiling point, °C	Melting point, °C	Specific gravity	TLV, mg/m^3
Chloroprene	88.54	59.4	-130±2	0.958^{20}_{4}	90
1-Chloro-1,3-butadiene	88.54	69	N.A.[a]	0.96^{20}_{20}	N.A.
3,4-Dichloro-1-butene	125.0	123	N.A.	N.A.	N.A.
cis-1,4-Dichloro-2-butene	125.0	152.5	-48	1.88^{25}_{4}	N.A.
trans-1,4-Dichloro-2-butene	125.0	155.5	1 to 3	1.83^{25}_{4}	N.A.
Butadiene	54.09	-4.41	-108.9	0.621^{20}_{4}	2,200
Chlorine	70.91	-34.6	-101.6	2.49^{0},[b] (vapor)	3
1,1,1,2-Tetrachlorobutane	195.91	134.5	N.A.	1.393^{20}_{20}	N.A.
1,2,2,3-Tetrachlorobutane	195.91	182	-48 to -46	1.428^{18}_{4}	N.A.
1,2,3,3-Tetrachlorobutane	195.91	90^{32} mm Hg	N.A.	1.420^{20}_{4}	N.A.

[a] Not available.

[b] Referenced to air.

Process--

Figure 1 is a flow diagram for the commercial manufacture of chloroprene. Commercial-grade butadiene and chlorine are fed in a ratio of at least one mole of butadiene to one mole of chlorine (6, 13). The preferred ratios of butadiene to chlorine are from

(10) TLVs® Threshold Limit Values for Chemical Substances and Physical Agents in the Workroom Environment with Intended Changes for 1976. American Conference of Governmental Industrial Hygienists, Cincinnati, Ohio, 1976. 97 pp.

(11) Chemical Engineers' Handbook, Fourth Edition. J. H. Perry and C. H. Chilton, eds. McGraw-Hill Book Company, New York, New York, 1963.

(12) Handbook of Chemistry and Physics. R. C. Weast, ed. CRC Press, Cleveland, Ohio, 1973.

(13) E. I. du Pont de Nemours and Company. Production of Dichlorobutenes. British Patent 661,806, November 28, 1951.

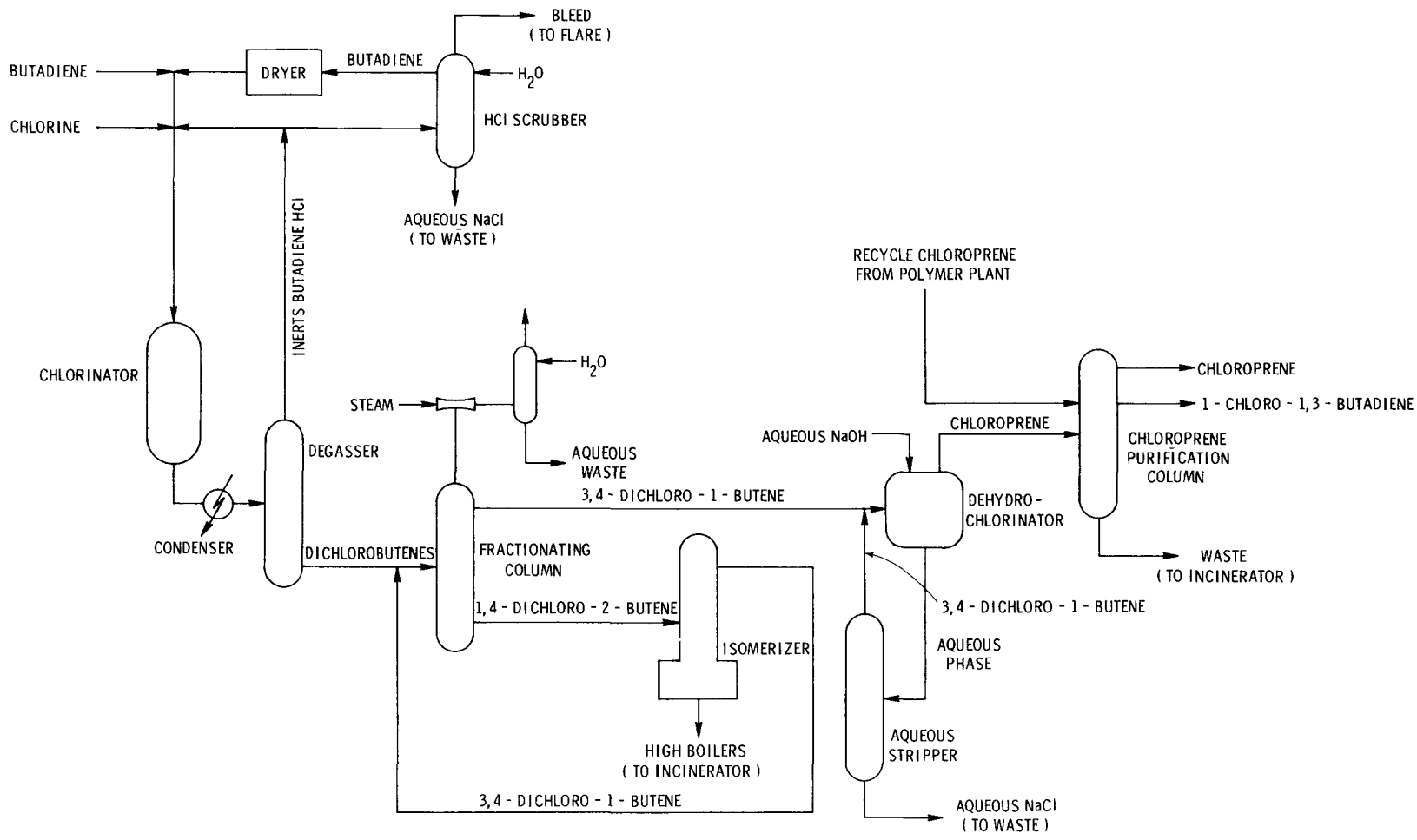

Figure 1. Chloroprene process flow diagram.

3:1 to 6:1, respectively (13). The amount of tetrachlorobutanes increases progressively at ratios of less than 3:1; at ratios greater than 6:1, the problem of recycling unreacted butadiene increases (13). The butadiene is preheated to a temperature between 150°C to 300°C to assure a complete vapor-phase reaction system and to control the products of the reaction (6, 13). The butadiene and chlorine feed streams are mixed with recycled butadiene and hydrogen chloride before being introduced into the reactor. The hydrogen chloride concentration in the reactor feed is at least 5% by volume, but, preferably, is between 30% and 50% by volume (14). The recycling of hydrogen chloride eliminates the necessity of providing a scrubber and butadiene dryer large enough to process the entire butadiene recycle stream (14).

The chlorinator is a glass- or ceramic-lined tubular reactor or a series of such reactors of increasing cross-sectional area. Although chlorination catalysts, packing materials, or other contact substrates may be used in the chlorinator, they offer no advantage and may, in fact, be detrimental (6, 13). Such materials promote the formation of carbon and other deposits on their surfaces causing reactor blockages (6). The direction of flow of the reactants is downward to minimize deposition of carbonaceous materials (13).

Reactor conditions are important. The temperature of the initial reaction zone is between 140°C and 220°C (13) and increases to between 280°C and 400°C in the final reaction zone (6, 13, 14). Reactor pressure is atmospheric (100 kPa) (6, 13, 14). Holdup time in the reactor is less than 12 s (6, 14). For reactors of increasing cross-sectional areas, the space velocity in the initial reaction zone is between 1,500 and 100,000 volumes of gas (at standard temperature and pressure) per volume of initial reaction zone per hour. The space velocity in the final reaction zone is between 30 hr^{-1} and 300 hr^{-1} (13). Dichlorobutene yields across the chlorinator range from 87% to 95% (mole basis) based on chlorine feed (6, 13).

The products from the chlorinator are condensed and sent to a degasser where inerts are removed from the reaction mixture. Butadiene and hydrogen chloride are taken overhead for recycle (15). A portion of the overhead stream is sent to a water scrubber to remove hydrogen chloride and, hence, prevent its buildup in the reactor inlet stream. The butadiene from the scrubber is dried

---

(14) Bellringer, F. J., and H. P. Crocker. Production of Dichlorobutenes. British Patent 798,028 (to The Distillers Company, Ltd.), July 16, 1958.

(15) Prescott, J. H. Butadiene to Neoprene Process Makes U.S. Debut. Chemical Engineering, 78(3):47-49, 1971.

and recycled to the reactor. A bleed is taken from the scrubber to purge the inerts from the system. The remainder of the overhead stream from the degasser is recycled directly to the chlorinator (14).

The bottoms stream from the degasser containing dichlorobutenes is sent to a fractionating column. Pure 3,4-dichloro-1-butene distilled off the top of the column goes directly to the dehydrochlorinator. The bottoms stream from the column containing 1,4-dichloro-2-butene is sent to the isomerizer where 1,4-dichloro-2-butene is converted to 3,4-dichloro-1-butene.

A copper-based catalyst ($Cu-CuCl_2$) is used as the isomerization catalyst (4, 5, 7, 15-17). The isomerizer is operated at a temperature of 123°C and atmospheric pressure (5). The desired product, 3,4-dichloro-1-butene, is continuously distilled and sent back to the fractionating column for purification. A purge stream is taken from the isomerizer pot to remove high boilers from the system (4, 5, 15).

The 3,4-dichloro-1-butene, which is sent from the fractionating column to the dehydrochlorinator,is converted to chloroprene. The reaction mixture is two-phase. The aqueous phase contains 10% to 20% sodium hydroxide, and the organic phase is 3,4-dichloro-1-butene. The reaction is carried out at a temperature above the boiling point of chloroprene (∿60°C), which allows removal of the chloroprene as it is formed. Yields are 94% (18).

The chloroprene stream is then fractionated to remove 1-chloro-1,3-butadiene and 3,4-dichloro-1-butene from the final product. These byproducts are incinerated. The aqueous phase from the dehydrochlorinator is stripped to remove 3,4-dichloro-1-butene and then disposed as waste.

Aqueous wastes from the process contain hydrogen chloride and sodium chloride. Waste chlorinated hydrocarbons are disposed through incineration, followed by scrubbing of hydrogen chloride from the incinerator exhaust gases. A schematic flow diagram for the disposal of chlorinated hydrocarbon waste is shown in

---

(16) Bellringer, F. J. Production and Stabilisation of Dichlorobutene. British Patent 877,586 (to The Distillers Company, Ltd.), September 13, 1961.

(17) Capp, C. W. Improvements in the Production of Dichlorobutenes. British Patent 984,094 (to The Distillers Company, Ltd.), February 24, 1965.

(18) Bellringer, F. J. Preparation of Chloroprene. British Patent 798,205 (to The Distillers Company, Ltd.), July 16, 1958.

Figure 2. One neoprene plant recovers the hydrogen chloride from the gas stream for reuse (19).

The incinerator section of the disposal system has been patented by Thermal Research and Engineering Corporation. A schematic diagram is presented in Figure 3. The incinerator consists of a burner and a quencher. The burner is an air-atomized vortex burner which is capable of atomizing the chlorinated hydrocarbon waste to about 40 nm. Chlorinated hydrocarbon wastes containing less than 70% chlorine will burn without auxiliary fuel. Wastes containing 20% to 30% chlorine have heating values of 23 kJ/kg to 28 kJ/kg and are capable of producing 1,930°C flame temperatures without auxiliary fuel. From 30% to 70% chlorine, heating values decline to 10 kJ/kg to 12 kJ/kg, and flame temperatures decline to 1370°C. Auxiliary fuel is required to maintain flame temperatures in the range of 1,370°C to 1,930°C. Wastes containing more than 70% chlorine will not support combustion. In this case the auxiliary fuel provides:

- heat required for waste decomposition
- flame temperatures of 1,370°C to 1,930°C
- hydrogen to prevent formation of chlorine

The quencher used in the incinerator section is unique in design since it must protect the processing equipment from damage by the 1,930°C flame temperatures. Flames from the burner are quenched in a 27% hydrochloric acid solution. Gases leave the quencher at 149°C to 371°C. The quencher is constructed of impervious graphite (Karbate®) to prevent corrosion.

The hydrogen chloride recovery section has been patented by Union Carbide. Quenched gas from the incinerator section is passed through primary, secondary, and tertiary falling film absorbers. Of the hydrogen chloride formed in the incinerator, 99% is recovered as 27% hydrochloric acid. Gases from the tertiary absorber enter a vent scrubber designed to reduce hydrogen chloride emissions to 50 ppm or 3 ppm when using water or dilute caustic, respectively, for the scrubbing liquid. The overall hydrogen chloride collection efficiency of the absorbers and the vent scrubber is 99.96% when using dilute caustic in the vent scrubber.

The 27% hydrochloric acid can be upgraded to anhydrous hydrogen chloride containing less than 50 ppm H_2O in Union Carbide equipment. A conventional packed column stripper is used to convert

---

(19) Hot Option for the Disposal of Hydrocarbon Wastes. Chemical Week, 110(16):37-38, 1972.

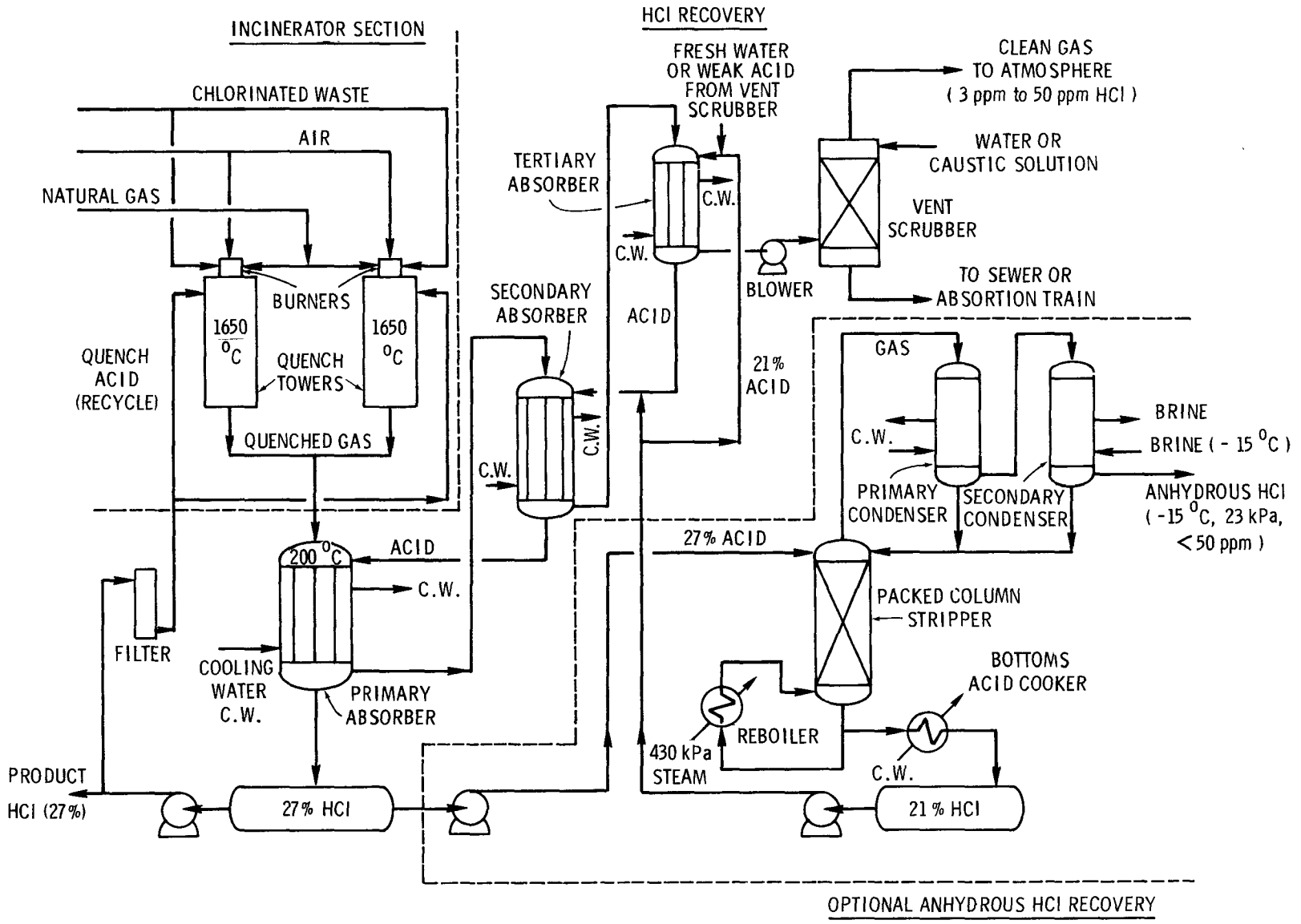

Figure 2. Schematic flow diagram for the disposal of chlorinated hydrocarbon wastes.

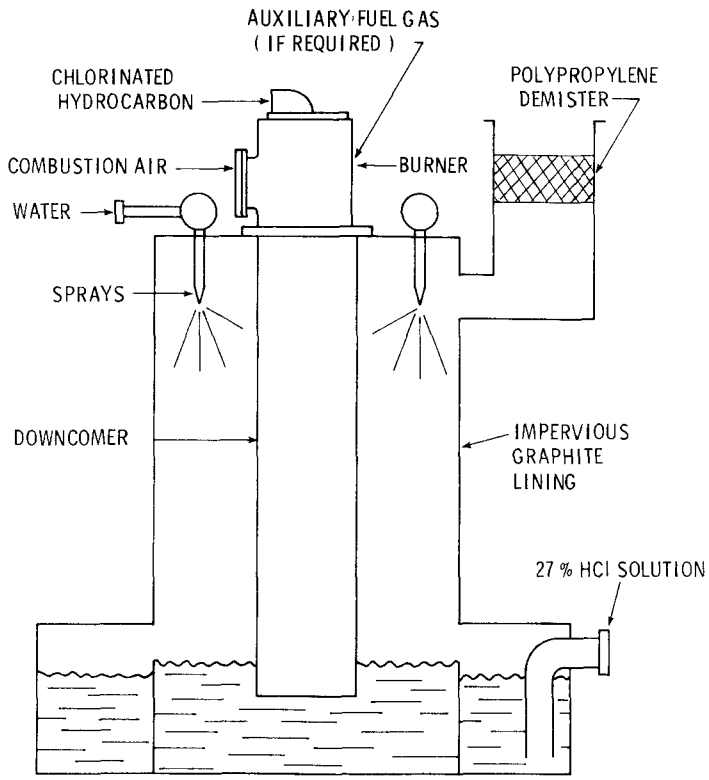

Figure 3. Schematic diagram of the Incinerator-Scrubber.

the 27% hydrochloric acid to 75% to 80% vapors. These vapors are cooled to about 16°C to yield 99% hydrogen chloride vapors, which are further cooled to -12°C in a brine condenser to reduce water content to 50 ppm.

Polymer Production

Chemistry--

The conversion of chloroprene to neoprene is accomplished by free radical-initiated emulsion polymerization (2, 3, 20). Emulsion polymerization is a heterogeneous reaction system with a continuous aqueous phase and a dispersed monomer phase. It differs from suspension polymerization in that the initiator is located in the aqueous phase (21).

The ideal emulsion polymerization system contains water, a water-insoluble monomer (i.e., chloroprene), an emulsifier, and a free radical initiator. In dilute aqueous solution at concentrations

---

(20) Hollis, C. E. Chloroprene and Polychloroprene Rubbers. Chemistry and Industry (London), (31):1030-1041, 1969.

(21) Billmeyer, F. J. Textbook of Polymer Science. Interscience Publishers, New York, New York, 1966. pp. 343-347.

above the critical micelle concentration, the emulsifier molecules form aggregates of about 100 molecules. These micelles are roughly spherical in shape with the hydrophobic portion of each molecule directed toward the micelle center. The average micelle is colloidal, with a diameter of 5 nm. For typical emulsifier concentrations, one cubic centimeter of solution will contain about 10^{18} micelles. The addition of monomer with agitation results in the monomer being dispersed in the form of droplets stabilized by the emulsifier. These droplets are usually about 1 μm in diameter. A small amount of monomer (∿1%) is solubilized by the micelles, which swell to twice their original size (22).

The free radical initiator is generated in the water phase. About 10^{13} free radicals/cm^3-s may be produced from the persulfate initiator at 50°C; hence, within a short time radicals will contact the monomer-swollen micelles and initiate polymerization. After initiation a new phase is produced, namely, a polymer latex particle swollen with monomer. Thus, in the ideal system, polymerization takes place only in the monomer-swollen micelles (22).

After initiation, polymerization inside the micelles continues and the latex particles grow. The emulsifier is adsorbed by the latex particle and acts as a protective colloid, preventing the particles from flocculating. The adsorption of the emulsifier upsets the equilibrium between the dissolved emulsifier and the emulsifier in the nonactivated micelles. Consequently, the nonactivated micelles disintegrate to restore the equilibrium. After 10% to 20% conversion to polymer, the nonactivated micelles have disappeared and all of the emulsifier is adsorbed on the latex-water interface; subsequently, no new latex particles can be formed. Hence, the number of latex particles is fixed (∿10^{15}/cm^3) and further polymerization occurs only inside these particles (22).

Polymerization is maintained by the diffusion of monomer from the monomer droplets through the aqueous phase. Monomer droplets decrease in number until they disappear completely at a conversion of about 60%. Subsequently, as the monomer in the latex particle is gradually used, the polymerization rate progressively decreases. Polymerization stops when all of the monomer in the particle is consumed (22).

In practice a chain-transfer agent is added to regulate the polymer chain length without affecting the rate of polymerization. A chain-transfer agent is a material that stops the growth of one polymer chain and, in doing so, becomes the initiating species. Thus, higher concentrations of chain-transfer agent will lower

---

(22) Encyclopedia of Polymer Science and Technology. H. F. Mark, ed. John Wiley and Sons, Inc., New York, New York, 1966. pp. 801-827.

the molecular weight because more polymer molecules will be terminated. The rate of polymerization remains the same because another polymer chain is started for each polymer (22).

Polymerization can continue until the monomer disappears (100% conversion). Complete conversion is sometimes undesirable because of latex instability, gel formation (cross linking), or branched polymer formation. In these cases, the polymerization reaction is stopped by the addition of a "shortstop" at the desired conversion. The action of the shortstop must be immediate and final. It must not only stop the conversion at the polymerization stage but also prevent further conversion at later processing steps. Thus, it must terminate the free radicals in the aqueous phase and in the latex particles themselves (22).

In general, the emulsion polymerization of chloroprene is similar to the ideal system. Unlike the ideal system, initiation in chloroprene emulsions is not restricted to the micelles or latex particles, but can also occur in the dissolved monomer or at the water-monomer interface (2).

Various surfactants can be used as emulsifiers in chloroprene polymerization. Anionic surfactants of the rosin acid, fatty acid, or alkyl sulfonate type are usually employed. Cationic soaps (e.g., cetyl pyridinium bromide) may be used in the stabilization of neutral or acidic emulsions of chloroprene. The commercial practice is to dissolve wood rosin in the chloroprene phase and sodium hydroxide in the aqueous phase and, thus, form the emulsifier, sodium rosinate, *in situ* (2). The critical micelle concentration for sodium rosinate is less than 10 moles/m^3 at 50°C (23). The sodium salt of the naphthalenesulfonic acid/formaldehyde condensation product is added in commercial processes to stabilize the latex when it is acidified for polymer isolation (2).

Chloroprene can be polymerized by a variety of free radical initiators such as hydroperoxides (not peroxides) azo compounds, reactive boron compounds, nitrogen sulfides, and nitrogen-containing sulfinic acids. These common initiators are unsatisfactory in the polymerization of chloroprene for the following reasons: 1) they are known to cause crosslinking, 2) they do not always give uniform products and reproducible reaction rates, 3) they have a low water solubility, 4) they do not produce the electrolytes that are necessary to stabilize the latex against gel formation, 5) they are expensive, 6) they can be hazardous in large quantities, and 7) they are sensitive to the inhibitors used to stabilize the chloroprene. In the latter example there

---

(23) Fryling, C. F. Emulsion Polymerization Systems. In: Synthetic Rubber, G. S. Whitby, C. C. Davis, and R. F. Dunbrook, eds. John Wiley and Sons, Inc., New York, New York, 1954. pp. 224-258.

is usually an induction period followed by a sudden exothermic polymerization which can be hazardous on a commercial scale.

Conversely, potassium persulfate (peroxodisulfate), which is used in commerce, does not promote crosslinking, gives uniform products and reproducible reaction rates, is water soluble, produces an electrolyte that stabilizes the final latex, is inexpensive, is safe to handle in large quantities, and is insensitive to inhibitors used in the chloroprene (23 and personal communications with P. Hamed, Monsanto Industrial Chemicals Co., Akron Marketing and Research Center, Akron, Ohio, 7 July 1977 and G. A. Richardson, Monsanto Research Corporation, Dayton, Ohio, 7 July 1977).

Molecular weight can be controlled with chain transfer agents such as alkyl mercaptans, diethyl xanthogen disulfides, dialkylthiuram disulfides, and iodoform. Commercially, dodecyl mercaptans are used to control molecular weight (2). Dodecyl mercaptan also may serve as a reductive initiator in the presence of potassium persulfate, producing a "redox" catalyst system frequently used in emulsion polymerization (23).

Conversion is controlled by using free radical inhibitors as shortstops. These include thiurams, oxalate anions, aromatic amines, phenolic compounds, and N,N-dialkylhydroxylamines (2). Lower alkyl (usually methyl or ethyl) tetraalkylthiuram disulfides are most commonly used in commercial practice (24).

Process--
Figure 4 is a block diagram for the commercial manufacture of Neoprene GN, which is typical of the process for the dry types and for neoprene latexes (24). The process is semicontinuous with the polymerization being a batch operation and the remainder of the process being continuous (15).

Feed to the polykettle consists of two streams - an organic stream and an aqueous stream. Table 4 gives the composition of these streams. (Sulfur, added as a "modifier," acts as a comonomer.) These two streams are emulsified at 38°C by recirculating the mixture through a centrifugal pump. The dispersed monomer droplets are ∿3 μm in diameter (3, 15).

The reactor is an agitated, 18 m^3, glass-lined polykettle jacketed to provide temperature control. Hot water is used initially on the jacket to supply the necessary activation energy. The polymerization reaction is exothermic (88.3 ± 6.7 kJ/mole of chloroprene), and the hot water is changed to brine at -15°C after the reaction starts. The reactor is controlled at 40°C ± 1°C by the brine and by varying the agitator speed (3, 15).

---

(24) Neal, A. M., and L. R. Mayo. Neoprene. In: Synthetic Rubber, G. S. Whitby, C. C. Davis, and R. F. Dunbrook, eds. John Wiley and Sons, Inc., New York, New York, 1954. pp. 767-793.

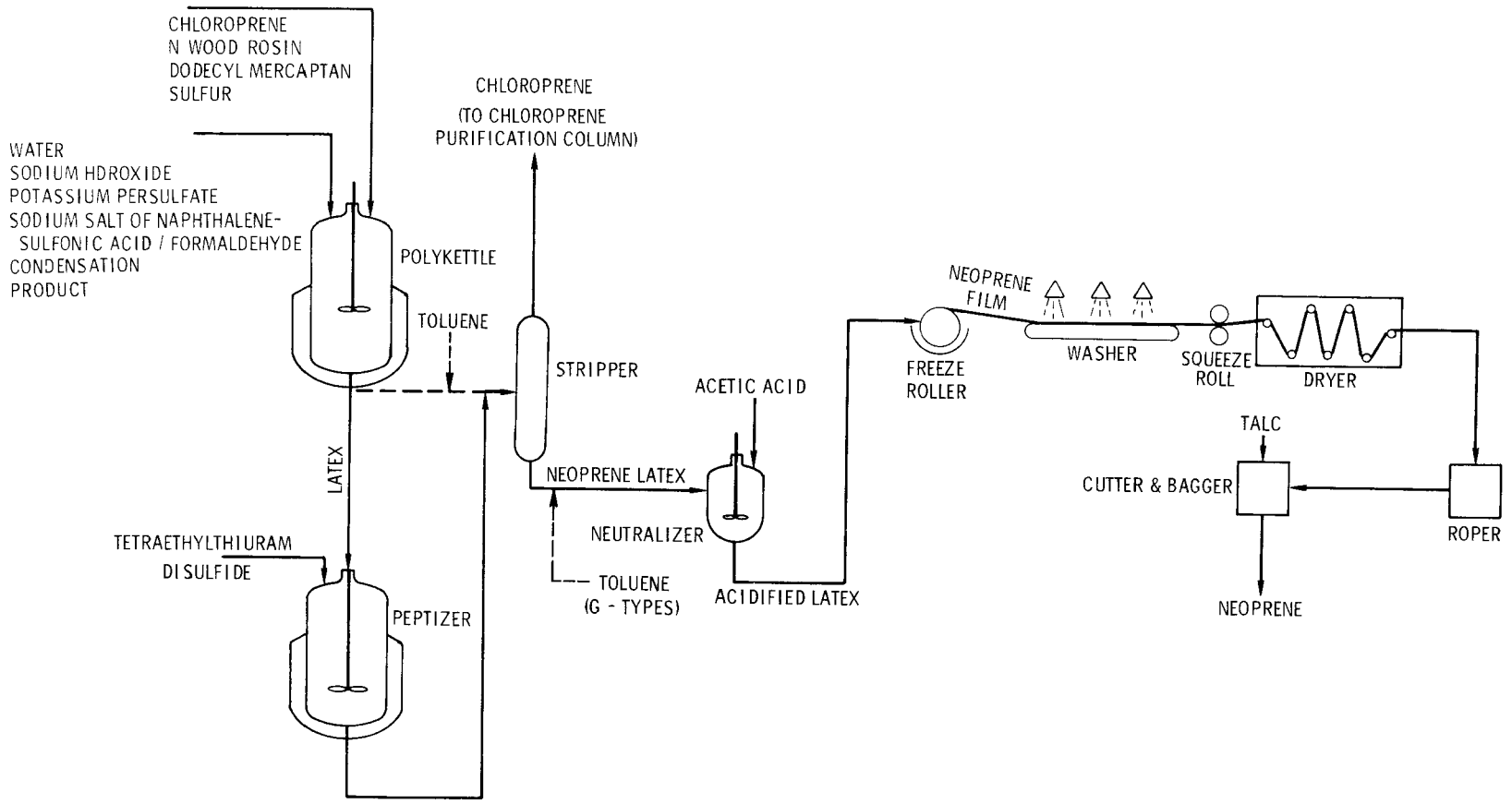

Figure 4. Neoprene process flow diagram.

TABLE 4. POLYMERIZATION RECIPE FOR NEOPRENE (24)
(based on 100 parts by weight of chloroprene)

Feed materials	Parts by weight
Aqueous	
Water	150
Sodium hydroxide	0.8
Sodium salt of naphthalenesulfonic acid/formaldehyde condensation product	0.7
Potassium persulfate	0.2 to 1.0
Organic	
Chloroprene	100
N Wood rosin	4
Sulfur	0.6

The reaction is followed by monitoring the change in specific gravity of the emulsion. At a specific gravity of 1.069 (91% chloroprene conversion), the latex is drained by gravity from the reactor. If a G-type neoprene is desired, the latex is taken to a second reactor for peptization (chemical plasticization) with tetraethylthiuram disulfide. The tetraethylthiuram disulfide breaks some of the sulfur linkages of the chloroprene-sulfur copolymer formed in the polykettle. The latex is cooled to 20°C and aged for about 8 hr to allow the tetraethylthiuram disulfide to plasticize the polymer. The tetraethylthiuram disulfide also acts as a stabilizer in the finished dry polymer (3, 15).

Shortstop ingredients and stabilizing agents are added to the non-G-type latex during the final stage of polymerization. Toluene is also added to help dissolve these compounds in the latex (personal communications with T. M. Nichols, Jr., E. I. du Pont de Nemours and Company, Wilmington, Delaware, September 1977).

The latex is steam stripped to remove unreacted monomer (10% to 40% of the solution). The chloroprene is recycled to the chloroprene purification column in the monomer unit (15), while the latex is sent to the neutralizer.

Toluene is added prior to the neutralization of G-type neoprene to aid in dissolving shortstop ingredients and stabilizing agents in the latex (personal communications with T. M. Nichols, Jr., E. I. du Pont de Nemours and Company, Wilmington, Delaware, September 1977).

In the neturalizer, the pH of the latex is adjusted to 5.5 to 5.8 using 10% acetic acid. Acetic acid decomposes the emulsifying

agent, sodium rosinate, and arrests the alkaline plasticizing action. The latex is then ready to be coagulated (2, 3, 15, 25).

The latex is processed into a sheet by the use of a freeze roll, 2.74 m in diameter and 2.74 m wide, which rotates partially submerged in the latex. The roll is rotated by a motor at a peripheral speed of 11 m/min. A doctor blade scrapes the coagulated film from the roll. The roll is maintained at a surface temperature of -5°C as it leaves the latex by circulating -12°C brine through the roll. The latex is approximately 35% neoprene by weight. Film thickness can be controlled by brine temperature and depth of the roll in the latex. Typical film thickness is 8.9 mm to 10.2 mm (25).

The neoprene film is washed on a belt to replace the serum in the film pores with water. The 2.84 m wide wash belt is composed of woven 18-8-stainless steel, and is driven by a motor with variable speed drive. Filtered wash water at 30°C is sprayed on the film from stainless steel weirs and is drawn through the film by a slight vacuum (ΔP = 370 Pa to 620 Pa) (25).

The washed film leaves the belt by a stripper roll and goes to squeeze rolls which operate at a peripheral speed approximately 3 m/min faster than the wash belt in order to strip the film from the wash belt. A squeeze roll unit consists of two horizontal squeeze rolls made of steel with a rubber cover and topped by 40 mm of felt and covered with cloth. The rolls are adjusted to give a pressure of about 103 kPa. The resulting water content of the film is 25% to 30% on a dry basis (25).

The washed film is then dried by a multipass air layer dryer. The neoprene film is carried through the dryer by a conveyor. The conveyor speed may be altered from 11 m/min to 34 m/min and, in general, is operated about 1.8 m/min to 2.4 m/min slower than the squeeze rolls, since the film shrinks during drying. The film is dried at about 120°C for 6 min to 8 min by air from ten heating units. The last two sections of the dryer consist of the cooling compartment operating at about 50°C. They are insulated at the junction with the drying compartment. Dried product contans less than 1% volatile material (2, 25).

The dried film is formed into a 19 mm diameter rope by a roping machine. As the film leaves the dryer, two fingers of the roper guide it into the groove of a female roll. A male roll compresses the film into rope-form (25).

Finally, the rope passes into a cutter. Each cutter can handle three ropes simultaneously. The rope is drawn through two drawing discs which cut it into 0.35 m lengths. The cuttings pass

---

(25) Youker, M. A. Continuous Isolation of G.R.M. from Latex. Chemical Engineering Progress, 43(8):391-398, 1947.

to a bagging machine in which they are dusted with talc to facilitate handling, and loaded into 22.7 kg bags for shipment (25, 26).

The basic process for Neoprene GN is modified to produce other grades of neoprene. Unmodified grades are polymerized without sulfur or sulfur-containing compounds in the recipe and consequently do not require peptization. These grades are the "W" type neoprenes that differ from the modified "G" type neoprenes by possessing a narrower molecular weight distribution. Table 5 lists the grades of neoprene and the differences in their polymerization (27). Latex forms of neoprene are produced in a similar manner but do not undergo acidification or coagulation (2).

TABLE 5. DIFFERENCES IN NEOPRENE TYPES (26)

Neoprene type	Sulfur-modified	Tetraethylthiuram disulfide stabilized	Grade	Other
GN	Yes	Yes	General	
GN-A	Yes	Yes	General	Secondary aromatic amine stabilizer
GRT	Yes	Yes	General	Nondiscoloring antioxidant
W	No	No	General	
WRT	No	No	General	
AC	No	Yes	Specialty	
CG	Yes	Yes	Specialty	
KNR	Yes	Yes	Specialty	
S	No	Yes	Specialty	Nondiscoloring antioxidant

MATERIALS FLOW

A raw material balance for the manufacture of chloroprene is given in Figure 5. Emission points in the chloroprene process (Figure 5) are designated by letters contained in circles. The emissions from these points are discussed in Section 4.

Figure 6 is a flowsheet and material balance for the neoprene production facility contiguous to the monomer plant. Emission points are designated as before. Emissions are discussed in Section 4.

(26) Collins, A. M. U.S. Patent 1,967,865 (to E. I. du Pont de Nemours and Company), July 24, 1934.

(27) Catton, N. L. The Neoprenes. E. I. duPont de Nemours and Company, Wilmington, Delaware, 1953. 245 pp.

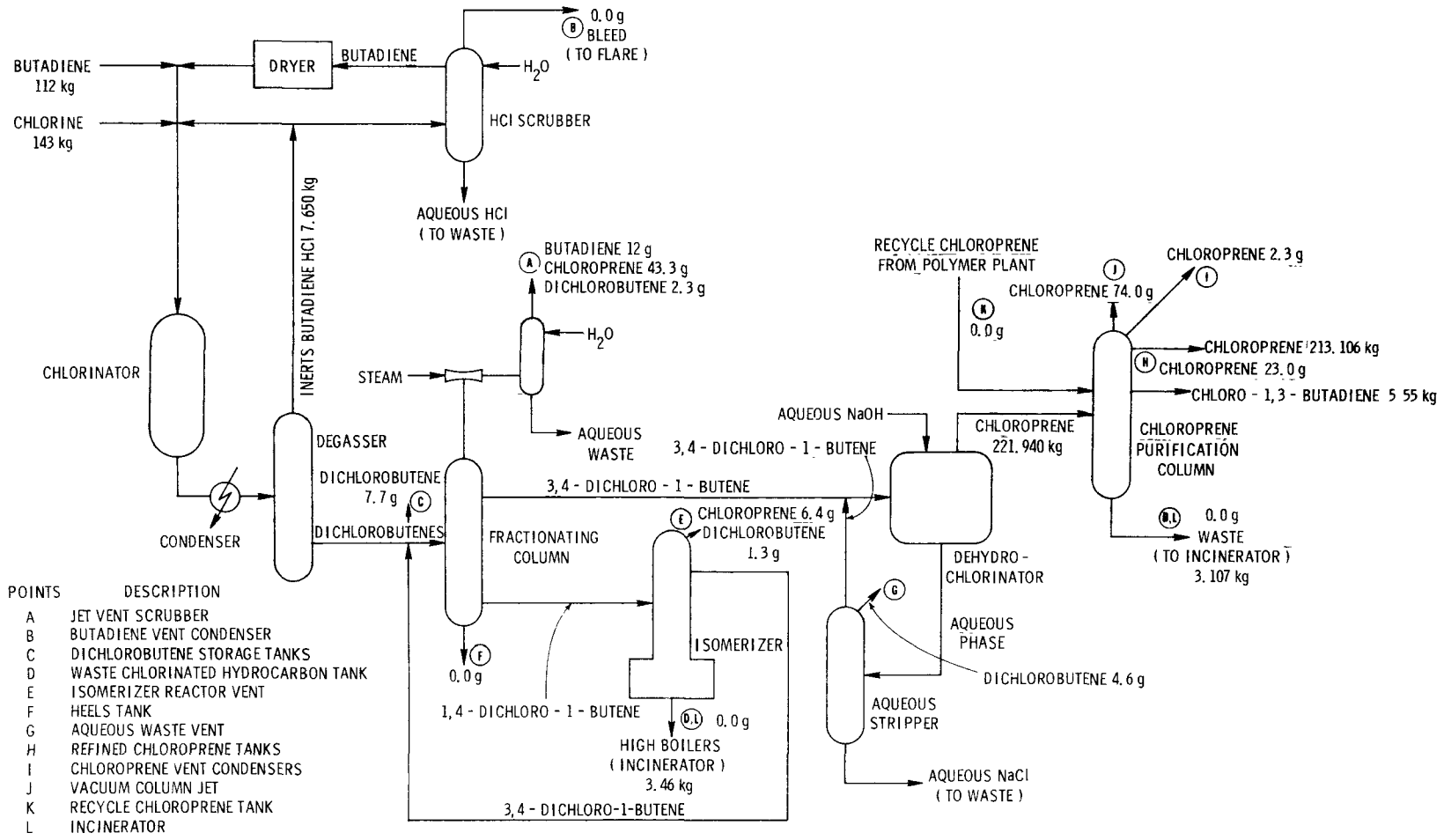

Figure 5. Chloroprene process material balance.

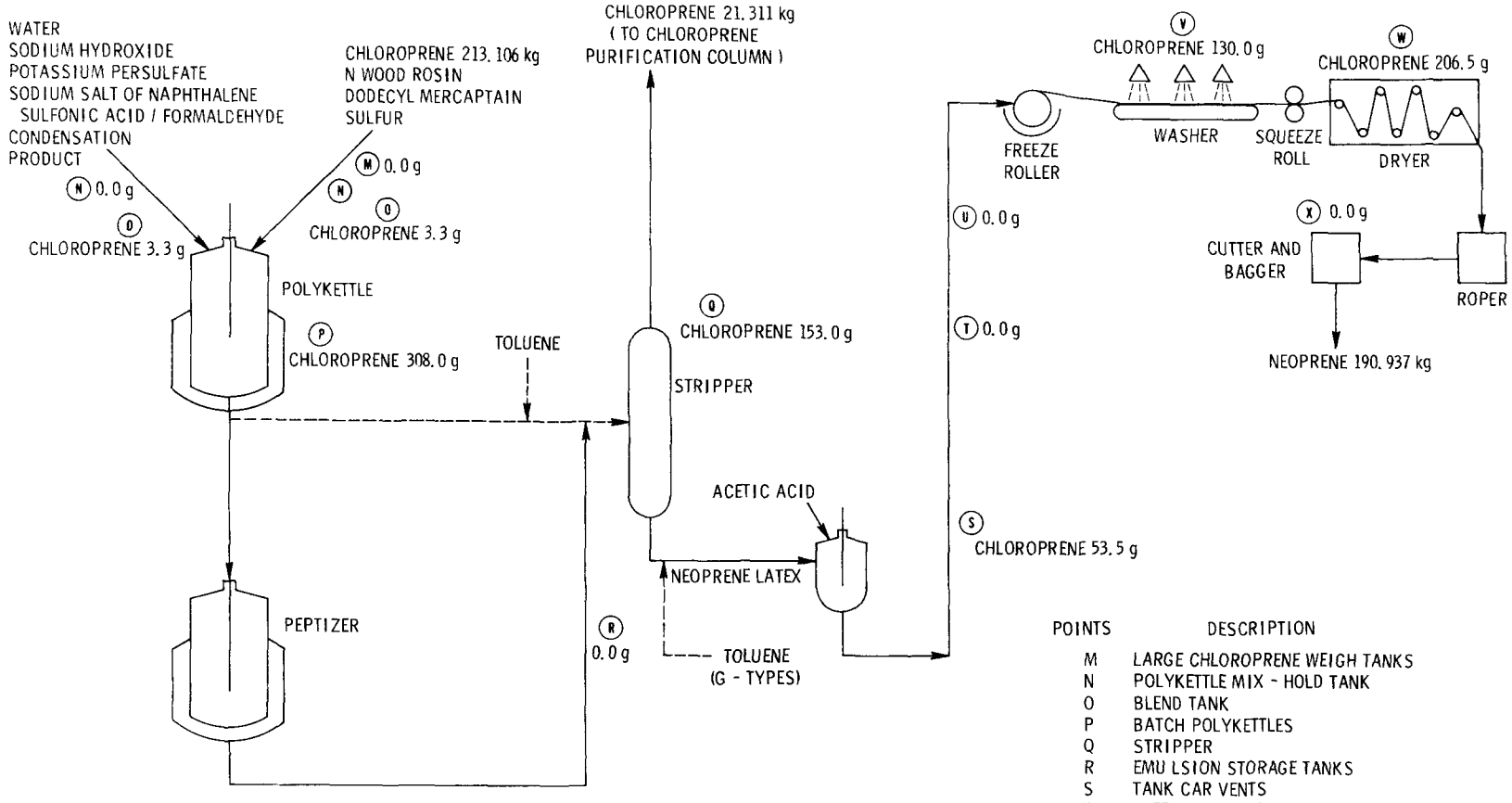

Figure 6. Neoprene process material balance.

GEOGRAPHICAL DISTRIBUTION

Table 6 lists manufacturing companies, locations, capacities, and county population densities for neoprene plants. Figure 7 is a map locating these facilities.

One company (Du Pont) possesses 86% of the total domestic neoprene capacity. The majority of domestic neoprene capacity (68% of total U.S. capacity) is concentrated at one plant in Louisville, Kentucky.

TABLE 6. NEOPRENE PLANT LOCATIONS (1)

Company	1976 capacity, 10^3 metric tons/yr	Location	County population density, persons/km^2
Du Pont	36	La Place, LA	27
Du Pont	136	Louisville, KY	716
Denka	27	Houston, TX	390
TOTAL	199		

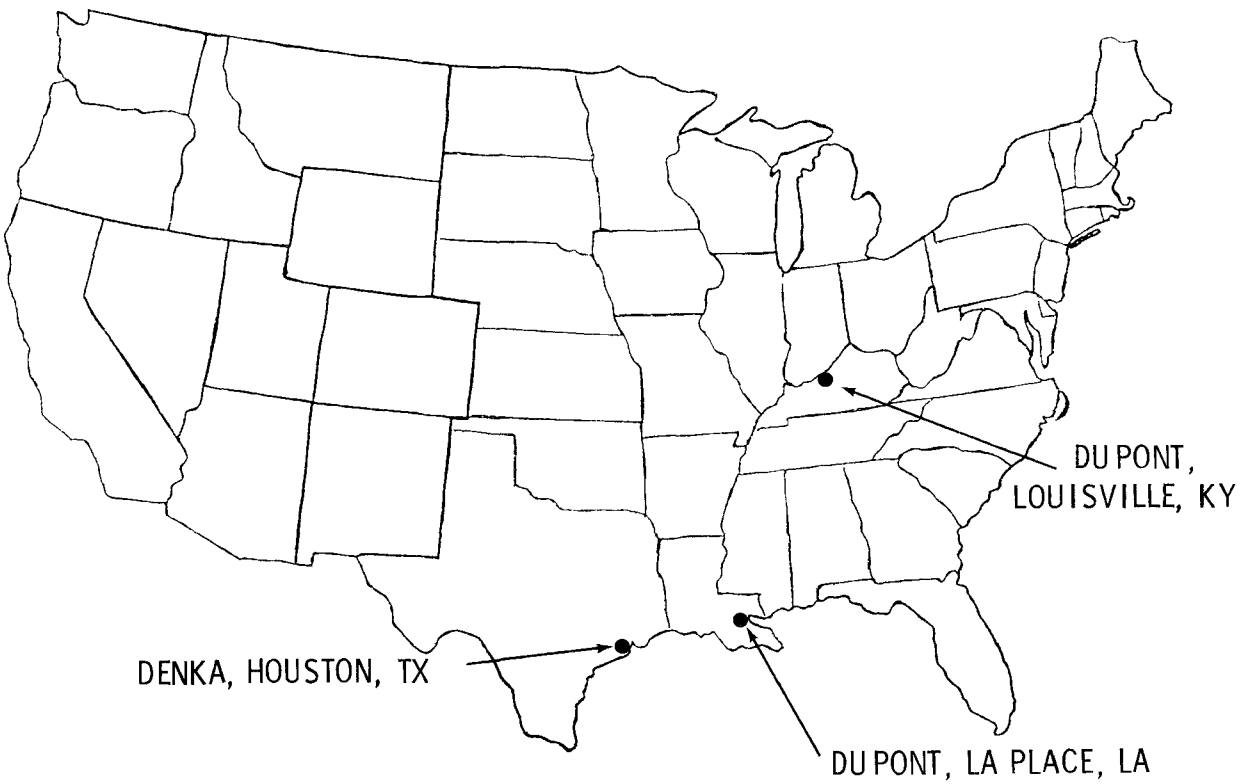

Figure 7. Locations of polychloroprene (neoprene) plants.

SECTION 4

EMISSIONS

SELECTED POLLUTANTS AND THEIR CHARACTERISTICS

The process mechanism and the formation of emissions from chloroprene and neoprene manufacturing facilities have been described in Section 3. Based on that information, the atmospheric emissions resulting from their manufacture are: 1) hydrocarbons from raw materials, byproducts, and intermediates; 2) particulates from the packaging of the final product; and 3) hydrogen chloride from substitution chlorination of butadiene. Table 7 (11, 28, 29) lists these potential pollutants together with their toxicity, health effects, and atmospheric reactivity.

The majority of the hydrocarbon species emitted are chlorinated materials. Toxicity and health effect data on many of these are nonexistent or extremely limited. Chloroprene, for example, is the only one of these compounds with an established TLV. Chloroprene is itself under investigation as a possible carcinogen, although no conclusive data have yet been obtained (28).

EMISSION FACTORS

The emission factors from neoprene manufacturing are given by compound in Table 8. Emission factors for each emission point in the neoprene process are given in Table 9. (Personal communication with R. Everhart, Air Pollution Control District at Jefferson County, Louisville, Kentucky, May 1975; and with T. M. Nichols, Jr., E. I. du Pont de Nemours and Company, Wilmington, Delaware, May 1977.)

Emission factors specific for 3,4-dichloro-1-butene production in the neoprene plant were calculated using plant production capacities for 3,4-dichloro-1-butene and the emission rates shown in Appendix B, Table B-1. All of the emission factors are given in terms of unit weight of neoprene produced.

---

(28) Neoprene. Chemical Marketing Reporter, 207(13):30-41, 1975.

(29) Sax, N. I. Dangerous Properties of Industrial Materials, Reinhold Book Corporation, New York, New YOrk, 1968. 1258 pp.

TABLE 7. CHARACTERISTICS OF EMISSIONS FROM NEOPRENE MANUFACTURING PLANTS (11, 28, 29)

Compound	TLV, mg/m^3	Health effects
Hydrocarbons[a]		
Butadiene	2,200	Eye irritant
Chloroprene	90	Central nervous system depressant; under investigation as possible carcinogen
1-Chloro-1,3-butadiene	N.A.[b]	N.D.[c]
3,4-Dichloro-1-butene	N.A.	N.D.
cis-1,4-Dichloro-2-butene	N.A.	N.D.
trans-1,4-Dichloro-2-butene	N.A.	N.D.
1,1,1,2-Tetrachlorobutane	N.A.	N.D.
1,2,2,3-Tetrachlorobutane	N.A.	N.D.
1,2,3,3-Tetrachlorobutane	N.A.	N.D.
Toluene	375	Causes headache, nausea, lack of appetite in exposures <200 ppm
Acetic acid	25	Caustic, irritating; can cause burns, lacrymation and conjuctivitis
Dodecyl mercaptan	N.A.	Toxic
Chloroprene dimer	N.A.	N.D.
Particulates[d]		
Talc	10	Can produce pulmonary fibrosis
Hydrogen chloride	7	Eye and respiratory irritant
Nitrogen dioxide[a]	9	Exceedingly toxic; death may result from edema several days after exposure; 100 ppm is dangerous for even short exposure; 200 ppm is usually fatal.

[a]Contribute to photochemical smog.

[b]Not available from the American Conference of Governmental Industrial Hygienists (ACGIH).

[c]No data.

[d]Particulates are atmospherically stable.

TABLE 8. NEOPRENE MANUFACTURING EMISSION FACTORS BY COMPOUND[a]

Compound	Emission factor, g/kg
Butadiene	0.047
Chloroprene	4.19
Dichlorobutene	0.025
Dodecyl mercaptan	0.011
Toluene	2.28
Acetic acid	0.002
Hydrogen chloride	0.018
Talc	0.19
Dimer	0.87
Nitrogen dioxide	0.001
Miscellaneous chemicals	0.281
Tetrachlorobutane	0.00027

[a]Personal communications with R. Everhart and T. M. Nichols, Jr.

TABLE 9. NEOPRENE MANUFACTURING EMISSION FACTORS[a,b]
(g/kg of neoprene produced)

Emission point	Compound emitted											
	Butadiene	Chloroprene	Dichlorobutene	Dodecyl mercaptan	Toluene	Acetic acid	Hydrogen chloride	Talc	Dimer	Nitrogen dioxide	Miscellaneous chemicals	Tetrachlorobutane
Jet vent scrubber	0.047	0.17	0.009	--	--	--	--	--	--	--	--	--
Butadiene vent condenser	--	--	--	--	--	--	--	--	--	--	--	--
Dichlorobutene storage tanks	--	--	0.003	--	--	--	--	--	--	--	--	--
Waste chlorinated hydrocarbon tank	--	--	--	--	--	--	--	--	--	--	--	--
Isomerizer reactor vent	--	--	0.007	--	--	--	--	--	--	--	--	--
Heels tank	--	0.011	--	--	--	--	--	--	--	--	--	--
Aqueous waste vent	--	--	0.006	--	--	--	0.00001	--	--	--	--	--
Refined chloroprene tanks	--	0.113	--	--	--	--	--	--	--	--	--	--
Chloroprene vent condenser	--	0.009	--	--	--	--	0.002	--	--	--	--	--
Vacuum column jet	--	0.29	--	--	--	--	--	--	--	0.001	--	--
Recycle chloroprene tank	--	0.003	--	--	--	--	--	--	--	--	--	--
Large chloroprene weight tanks	--	--	--	--	--	--	--	--	--	--	--	--
Polykettle mix-hold tank	--	--	--	--	--	--	--	--	--	--	--	--
Blend tanks	--	0.16	--	--	0.05	--	--	--	--	--	--	--
Batch polykettles	--	1.1	--	--	0.018	--	--	--	--	--	--	--
Strippers	--	0.63	--	--	0.019	--	--	--	--	--	--	--
Emulsion storage tanks	--	0.17	--	--	--	--	--	--	--	--	--	--
Tank car vents	--	0.21	--	--	--	--	--	--	--	--	--	--
Freeze roll feed tanks	--	--	--	--	--	--	--	--	--	--	--	--
Solution makeup tank	--	--	--	--	0.04	0.002	--	--	--	--	--	--
Wash belts	--	0.029	--	0.011	0.15	--	--	--	--	--	--	--
Dryer exhaust	--	0.94	--	0.0001	2.0	--	--	--	0.87	--	0.28	--
Vaporization from process wastewater	--	0.035	--	--	--	--	--	--	--	--	0.00085	0.00027
Incinerator	--	--	--	--	--	--	0.016	--	--	--	--	--
Continuous polykettle	--	--	--	--	--	--	--	--	--	--	--	--
Bagger exhaust	--	--	--	--	--	--	--	0.19	--	--	--	--

[a] Dashes signify no reported emissions or emission points nonexistant for those plants where data were obtained.

[b] Personal communications with R. Everhart and with T. M. Nichols, Jr.

The emission factors for compounds and emission points specific to 3,4-dichloro-1-butene production have been modified to account for a given ratio of 1.5 parts by weight of 3,4-dichloro-1-butene necessary to produce 1 part by weight of neoprene. To calculate emission factors for emission points other than those specific to 3,4-dichloro-1-butene, the production capacities for neoprene manufacturing plants were utilized.

DEFINITION OF A REPRESENTATIVE SOURCE

A representative source for neoprene manufacture was defined to determine source severities for emission points and compounds emitted. The representative source was defined as a neoprene plant using butadiene technology for chloroprene production. The capacity was defined as 95 x 10^3 metric tons/yr, which is a weighted average of the three actual neoprene plants. It should be noted that emissions from the manufacture of chloroprene are considered as part of the total emissions for neoprene in this section. Emissions from chloroprene manufacture can be distinguished by correlating the emission points shown in Tables 8 and 9. Emission heights for a representative plant are given as averages of 13.2 m for hydrocarbons and 11.6 m for particulates. An average county population density of 378 persons/km^2 was used to calculate the affected population.

ENVIRONMENTAL EFFECTS

Maximum Ground Level Concentration

The maximum ground level concentration, $\bar{\chi}_{max}$, of each emission from neoprene manufacturing was estimated by Gaussian plume dispersion methodology. The following formula was used for the calculation of χ_{max}:

$$\chi_{max} = \frac{2\ Q}{\pi H^2 e \bar{u}} \qquad (4)$$

where Q = mass emission rate, g/s
$\bar{u}$ = average wind speed, m/s = 4.47 m/s
H = emission height, m
π = 3.14
e = 2.72

$\bar{\chi}_{max}$, the maximum ground level concentration averaged over a given period of time, can be calculated from χ_{max}. The averaging time is 24 hr for noncriteria emissions (e.g., hydrogen chloride, chloroprene, etc.), and it is the same time as that used in the primary air quality standards for criteria pollutants (e.g., 3 hr

for hydrocarbons and 24 hr for particulates). The relationship between χ_{max} and $\bar{\chi}_{max}$ is expressed as (30):

$$\bar{\chi}_{max} = \chi_{max}\left(\frac{t_o}{t}\right)^{0.17} \qquad (5)$$

where t_o = short term averaging time = 3 min
t = averaging time

$\bar{\chi}_{max}$ and height of emissions data for each compound are presented in Table 10. (Personal communication with R. Everhart.) Table 11 lists $\bar{\chi}_{max}$ as a function of emission point.

TABLE 10. TIME-AVERAGED MAXIMUM GROUND LEVEL CONCENTRATIONS BY COMPOUND[a,b]

Compound	Emission height,[c] m	$\bar{\chi}_{max}$, mg/m^3
Butadiene	27.4	0.004
Chloroprene	13.3	1.3
Dichlorobutene	6.7	0.03
Dodecyl mercaptan	13.5	0.003
Toluene	15.4	0.53
Acetic acid	17.4	0.0004
Hydrogen chloride	12.8	0.006
Talc	11.6	0.077
Dimer	19.8	0.12
Nitrogen dioxide	3.0	1.4
Miscellaneous chemicals	3.0	1.7
Tetrachlorobutane	3.0	0.002

[a]Calculated using emission factors and production capacity for a representative plant.

[b]It should be noted that $\bar{\chi}_{max}$ is being calculated for each compound as if emitted from a single point source at a certain height and at a constant rate. Actual neoprene plant conditions, however, indicate that the compounds are emitted from two or more points of varying heights. Emission rates from each point are not constant but vary depending upon the nature of the process step. Values for $\bar{\chi}_{max}$ by compound should be considered as average values only.

[c]See Appendix A for calculation procedure.

(30) Turner, D. B. Workbook of Atmospheric Dispersion Estimates. Public Health Service Publication No. 999-AP-26, U.S. Department of Health, Education, and Welfare, Cincinnati, Ohio, May 1970.

TABLE 11. TIME-AVERAGED MAXIMUM GROUND LEVEL CONCENTRATIONS[a,b]

Emission point	$\bar{\chi}_{max}$, μg/m³											
	Buta-diene	Chloro-prene	Dichloro-butene	Dodecyl mercaptan	Toluene	Acetic acid	Hydrogen chloride	Talc	Dimer	Nitrogen dioxide	Miscellaneous chemicals	Tetra-chlorobutane
Jet vent scrubber	3.4	12.4	0.66	--	--	--	--	--	--	--	--	--
Butadiene vent condenser	--	--	--	--	--	--	--	--	--	--	--	--
Dichlorobutene storage tanks	--	--	3.7	--	--	--	--	--	--	--	--	--
Waste chlorinated hydrocarbon tank	--	--	--	--	--	--	--	--	--	--	--	--
Isomerizer reactor vent	--	--	0.53	--	--	--	--	--	--	--	--	--
Heels tank	--	10.4	--	--	--	--	--	--	--	--	--	--
Aqueous waste vent	--	--	36.5	--	--	--	0.061	--	--	--	--	--
Refined chloro-prene tanks	--	195	--	--	--	--	--	--	--	--	--	--
Chloroprene vent condensers	--	1.5	--	--	--	--	0.33	--	--	--	--	--
Vacuum column jet	--	44.5	--	--	--	--	--	--	--	0.15	--	--
Recycle chloro-prene tank	--	2.3	--	--	--	--	--	--	--	--	--	--
Large chloro-prene weigh tanks	--	--	--	--	--	--	--	--	--	--	--	--
Polykettle mix-hold tank	--	--	--	--	--	--	--	--	--	--	--	--
Blend tanks	--	86	--	--	27	--	--	--	--	--	--	--
Batch poly-kettles	--	145	--	--	2.4	--	--	--	--	--	--	--
Strippers	--	280	--	--	8.4	--	--	--	--	--	--	--
Emulsion storage tanks	--	35	--	--	--	--	--	--	--	--	--	--
Tank car vents	--	199	--	--	--	--	--	--	--	--	--	--
Freeze roll feed tanks	--	--	--	--	--	--	--	--	--	--	--	--
Solution makeup tank	--	--	--	--	7.2	0.4	--	--	--	--	--	--
Wash belts	--	4	--	8.4	21	--	--	--	--	--	--	--
Dryer exhaust	--	111	--	0.02	237	--	--	--	15	--	47	--
Vaporization from process wastewater	--	213	--	--	--	--	--	--	--	--	7.4	2.3
Incinerator	--	--	--	--	--	--	1	--	--	--	--	--
Continuous polykettle	--	--	--	--	--	--	--	--	--	--	--	--
Bagger exhaust	--	--	--	--	--	--	--	77	--	--	--	--

[a] Dashes signify no reported emissions or emission point nonexistant for those plants where data was obtained; hence no calculated $\bar{\chi}_{max}$.

[b] Calculated using emission factors and production capacity for a representative plant.

Source Severity

To obtain an indication of the hazard potential of the emission source, the source severity, S, was defined as:

$$S = \frac{\bar{\chi}_{max}}{F} \tag{6}$$

where F is the primary ambient air quality standard (AAQS) (or guideline) for criteria pollutants and is a corrected threshold limit value (TLV • 8/24 • 1/100) for noncriteria pollutants. Source severity represents the ratio of time-averaged maximum ground level exposure to the hazard level of exposure for a particular emission. Source severity equations were derived for each pollutant as shown in Appendix C.

For each compound having an established AAQS, guideline, or TLV, the source severity was calculated and is shown in Table 12. Table 13 lists the source severities for each emission point for each compound.

TABLE 12. SOURCE SEVERITIES FOR CRITERIA POLLUTANTS AND CHEMICAL SPECIES

Pollutant	TLV, mg/m^3 (10)	Source severity
Hydrocarbons	0.16[a]	23
Particulates	0.26[b]	0.03
NO_x	0.10[b]	0.1
Butadiene	2,200	0.0004
Chloroprene	90	4.3
Toluene	375	0.4
Acetic acid	25	0.0003
Hydrogen chloride	7	0.9
Talc	6	3.4

[a]Guideline of 160 $\mu g/m^3$ used in place of corrected TLV to compute source severity.

[b]Primary ambient air quality standard used in place of TLV to compute source severity.

Contribution to Total Air Emissions

The contribution of neoprene manufacturing to statewide and nationwide emissions was measured by the ratio of mass emissions from this source to the total emissions from all stationary sources.

TABLE 13. SOURCE SEVERITIES[a,b]

Emission point	Compound emitted											
	Butadiene	Chloroprene	Dichlorobutane	Dodecyl mercaptan	Toluene	Acetic acid	Hydrogen chloride	Talc	Dimer	Nitrogen dioxide	Miscellaneous chemicals	Tetrachlorobutane
Jet vent scrubber	0.0005	0.04	0.006	--	--	--	--	--	--	--	--	--
Butadiene vent scrubber	--	--	--	--	--	--	--	--	--	--	--	--
Dichlorobutene storage tanks	--	--	0.03	--	--	--	--	--	--	--	--	--
Waste chlorinated hydrocarbon tank	--	--	--	--	--	--	--	--	--	--	--	--
Isomerizer reactor tank	--	--	0.005	--	--	--	--	--	--	--	--	--
Heels tank	--	0.03	--	--	--	--	--	--	--	--	--	--
Aqueous waste vent	--	--	0.3	--	--	--	0.003	--	--	--	--	--
Refined chloroprene tanks	--	0.65	--	--	--	--	--	--	--	--	--	--
Chloroprene vent condensers	--	0.005	--	--	--	--	0.014	--	--	--	--	--
Vacuum column jet	--	0.15	--	--	--	--	--	--	--	0.002	--	--
Recycle chloroprene tanks	--	0.008	--	--	--	--	--	--	--	--	--	--
Large chloroprene weigh tanks	--	--	--	--	--	--	--	--	--	--	--	--
Polykettle mix-hold tank	--	--	--	--	--	--	--	--	--	--	--	--
Blend tanks	--	0.3	--	--	0.02	--	--	--	--	--	--	--
Batch polykettles	--	0.5	--	--	0.002	--	--	--	--	--	--	--
Strippers	--	1.0	--	--	0.007	--	--	--	--	--	--	--
Emulsion storage tanks	--	0.3	--	--	--	--	--	--	--	--	--	--
Tank car vents	--	0.7	--	--	--	--	--	--	--	--	--	--
Freeze roll feed tanks	--	--	--	--	--	--	--	--	--	--	--	--
Solution makeup tank	--	--	--	--	0.006	0.004	--	--	--	--	--	--
Wash belts	--	0.05	--	0.05	0.06	--	--	--	--	--	--	--
Dryer exhaust	--	0.4	--	0.0001	0.2	--	--	--	1.0	--	-[c]	--
Vaporization from process wastewater	--	0.06	--	--	--	--	--	--	--	--	-[c]	0.01
Incinerator	--	--	--	--	--	--	0.2	--	--	--	--	--
Continuous polykettle	--	--	--	--	--	--	--	--	--	--	--	--
Bagger exhaust	--	--	--	--	--	--	--	3.8	--	--	--	--

[a] Dashes signify no reported emissions or emission point nonexistant for those plants where data were obtained; hence, no calculated source severity values.

[b] Calculated using emission factors and production capacity for a representative plant.

[c] Indeterminate.

The mass emissions of criteria pollutants (organic materials were classified as hydrocarbon) resulting from neoprene manufacture were calculated by multiplying the emission factors by the total production in each state. The mass emissions for each of the three states with neoprene production is shown in Table 14 (31), along with the percent contribution of neoprene manufacture to the total state emissions.

TABLE 14. CONTRIBUTION OF NEOPRENE PRODUCTION TO 1976 STATE EMISSIONS OF CRITERIA POLLUTANTS (31)

State	Total state emissions, million metric tons	Neoprene emissions,[a] metric tons	Percent of total for state[a]
Kentucky			
Particulate	0.546	--	--
SO_x	1.20	--	--
NO_x	0.419	0.15	<0.0001
Hydrocarbons	0.326	1,503	0.073
Carbon monoxide	1.19	--	--
Louisiana			
Particulate	0.38	11.8	0.00310
SO_x	0.167	--	--
NO_x	0.423	--	--
Hydrocarbons	1.92	239	0.078
Carbon monoxide	5.63	--	--
Texas			
Particulate	0.549	9.99	0.00182
SO_x	0.753	--	--
NO_x	1.30	0.03	<0.0001
Hydrocarbons	2.22	179	0.008
Carbon monoxide	6.90	--	--

[a]Dashes signify no reported emissions; hence, state contribution not calculated.

Table 15 (31) gives the contribution of criteria pollutants emissions from neoprene manufacture to the total criteria emissions on a nationwide basis.

(31) Eimutis, E. C., and R. P. Quill. Source Assessment: State-By-State Listing of Criteria Pollutant Emissions. EPA-600/2-77-107b, U.S. Environmental Protection Agency, Research Triangle Park, North Carolina, July 1977. 138 pp.

TABLE 15. CONTRIBUTION OF NEOPRENE PRODUCTION TO 1976 NATIONAL EMISSIONS OF CRITERIA POLLUTANTS (31)

Pollutant	National emissions, million metric tons	Neoprene emissions,[a] metric tons	Percent
Particulates	129	21.8	0.00002
SO_x	24	--	--
NO_x	9.3	0.18	<0.00002
Hydrocarbons	16.6	1,921	0.01
Carbon monoxide	88.0	--	--

[a]Dashes signify no reported emissions; hence, contribution to national burden not calculated.

Affected Population

The populations affected by criteria pollutants emitted from a representative neoprene manufacturing plant are given in Table 16. The area exposed to the time-averaged ground level concentration, $\bar{\chi}$, for which $\bar{\chi}/F > 0.1$ was obtained by a computer from the area within the isopleth for $\bar{\chi}$ (30). The number of people within the exposed area was then calculated by using an average population density.

The population density used in the calculation of affected population was 378 persons/km^2. The population affected by particulates from talc dusting was estimated to be 153 persons. Total hydrocarbons emitted from a representative plant were estimated to affect 1,234 persons for a $\bar{\chi}/F \geq 1.0$.

TABLE 16. AFFECTED AREA AND AFFECTED POPULATION

Plant parameter	Particulates[a]	Hydrocarbons	NO_x
Population density, persons/km^2	378	378	378
Emission height, m	11.6	12.7	3.0
Q, g/s	0.57	23	0.004
F, g/m^3	0.00026	0.00016	0.00010
χ_{max}, g/m^3	0.00008	0.004	-[b]
Affected area, km^2	0.40	3.2[c]	0.003
Affected population, persons	153	1,234[c]	1

[a]Talc is the only particulate emitted from the representative neoprene plant.

[b]Equation C-77 (Appendix C) is used to calculate source severity rather than χ_{max}/F.

[c]Area and population affected are for a $\bar{\chi}/F \geq 1.0$.

Calculations determining the affected area and affected population for a representative plant assume that the general population is in close proximity to the buildings where neoprene production occurs. For two actual neoprene production facilities, however, property lines extend 450 m to 600 m from the emission points described in the section. In Figures 8 and 9 the concentrations of hydrocarbons and particulates emitted during neoprene production are shown as a function of distance downwind from the point source. From the figures it is seen that the maximum ground-level concentrations for hydrocarbons and particulates are within the property lines of these two plants.

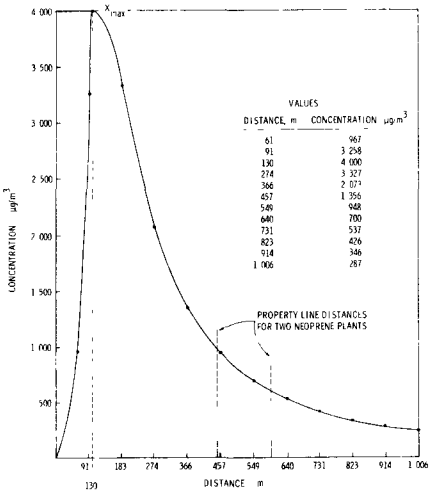

Figure 8. Hydrocarbon concentration as a function of distance downwind from a representative plant.

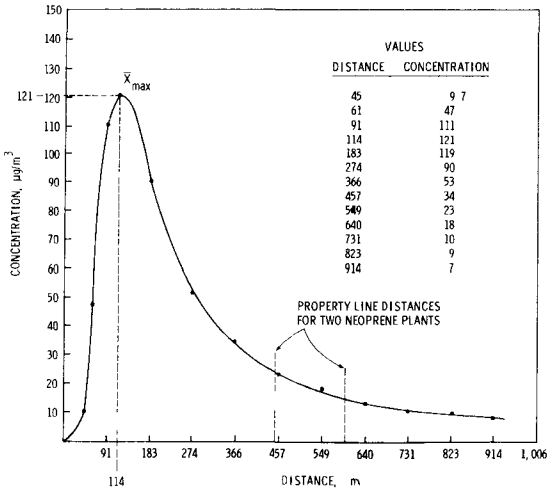

Figure 9. Particulate concentrations as a function of distance downwind from a representative plant.

SECTION 5

CONTROL TECHNOLOGY

Existing control technology for the neoprene processing industry is described in this section. The control of hydrocarbons is accomplished by condensation, absorption, pressurized nitrogen blankets, flares, and by process modifications. These controls are of primary importance because hydrocarbons comprise 90+% by weight of the total emissions from a neoprene plant. Control of hydrogen chloride during the incineration of waste chlorinated hydrocarbons is accomplished with falling film absorbers. Either hydrochloric acid or anhydrous hydrogen chloride can be recovered because hydrogen chloride is absorbed from the gas stream by an aqueous absorbing liquid. The need to control particulate emissions is confined to the area where talc is used to dust neoprene rope prior to bagging.

HYDROCARBONS

Condensation

Organic compounds can be removed from an air stream by condensation. A vapor will condense when, at a given temperature, the partial pressure of the compound is equal to or greater than its vapor pressure. Similarly, if the temperature of a gaseous mixture is reduced to the saturation temperature (i.e., the temperature at which the vapor pressure equals the partial pressure of one of the constituents), the material will condense. Thus, either increasing the system pressure or lowering the temperature can cause condensation. In most air pollution control applications, decreased temperature is used to condense organic materials, since increased pressure is usually impractical (32).

Condensation of organic vapors in neoprene manufacture is accomplished by the use of direct-contact condensers and brine-cooling systems. Direct-contact condensers are used to control hydrocarbon emissions from polykettles, while brine-cooling systems are used to control emissions from the isomerizers, chloroprene

---

(32) Hydrocarbon Pollutant Systems Study; Volume I, Stationary Sources, Effects, and Control. APTD-1499 (PB 219 073), U.S. Environmental Protection Agency, Research Triangle Park, North Carolina, 20 October 1972. 377 pp.

condenser vents, batch polykettles, neoprene strippers and storage tank vents.

In the direct-contact cooler, chilled water is sprayed into the waste gas flow emitted from the batch polykettles during charging and emptying of the reactors. One neoprene plant utilizing this control device reports a hydrocarbon removal efficiency of 43% (33).

Neoprene plants control hydrocarbon vapors by circulating brine at -18°C around the isomerizer chloroprene condenser vents, neoprene strippers, and storage tank vents. A series of brine-cooling devices used to control emissions from the neoprene strippers is shown in Figure 10 (33).

Emissions from batch polykettles are also controlled with brine-cooling systems operating at a temperature of 0°C.

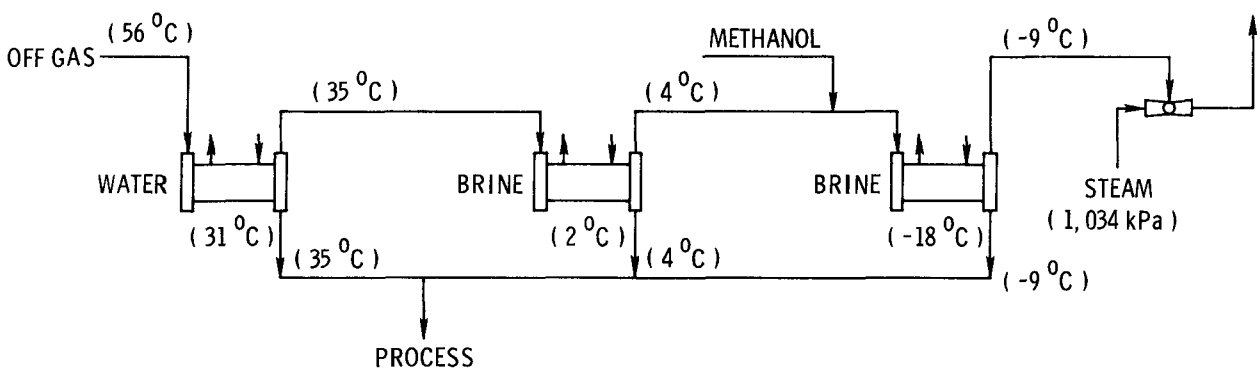

Figure 10. Brine cooling system for neoprene strippers.

(33) Pruessner, R. D. and L. D. Broz. Hydrocarbon Emission Reduction Systems. Chemical Engineering Progress, 73(8): 69-73, 1977.

Pressurized Storage

Chlorobutadiene-water emulsion is stored in feed, hold, and aging tanks during its polymerization into neoprene. To control hydrocarbon emissions from emulsion storage, fixed-roof tanks are placed under 17 kPa to 103 kPa pressure (gauge) (34). Available vapor space in these pressurized tanks is reduced by placing a layer of nitrogen gas over the surface of the stored chlorobutadiene-water emulsion. This gas layer is referred to as a nitrogen blanket.

Absorption

Oil absorption is utilized by one plant to control hydrocarbon emissions from the fractionating columns used in chloroprene production and from the batch polykettles after the waste gases have passed through a direct-contact cooling system (33). The absorption tower used to control emissions from the fractionating columns is a two-stage oil spray tower that operates under 1.33 kPa pressure (33). Absorption fluid is a process heavy ends stream chilled to 18°C (33). Batch polykettle emissions are controlled by a five-stage oil absorption tower. Absorption is accomplished by a mixture of paraffinic and aromatic oils which are dispersed through the tower at 7°C (33). Polymerization at hydrocarbons within the tower is reduced by the particular mixture of absorbing oils. Figure 11 shows a schematic of the combined control system for batch polykettles which includes the direct-contact condenser system previously mentioned and a five-stage absorption system (33).

The effectiveness of oil absorption in controlling hydrocarbon emissions is dependent upon the solubility of the organic vapors in the absorbing liquid and the area of the interface between the gas phase and liquid phase (33). Solubility is expressed in the form of an equilibrium constant (K) which equals the mole fraction of hydrocarbons in the gas phase divided by the mole fraction of hydrocarbons in the liquid phase. K will vary with changes in temperature, pressure, and composition of the waste gas stream and absorbing liquid (11). Increasing the area of the interface to achieve greater control efficiency is accomplished by (35):

---

(34) Air Pollution Engineering Manual, Second Edition. J. A. Danielson, ed. Publication No. AP-40, U.S. Environmental Protection Agency, Research Triangle Park, North Carolina, May 1973. 987 pp.

(35) Liptak, B. G. Environmental Engineer's Handbook, Vol. 2. Chilton Book Company, Radnor, Pennsylvania, 1974. 1340 pp.

- dispersing the liquid phase within the gas phase
- dispersing the gas phase within the liquid phase
- spreading the liquid phase over a large surface in contact with the gas phase

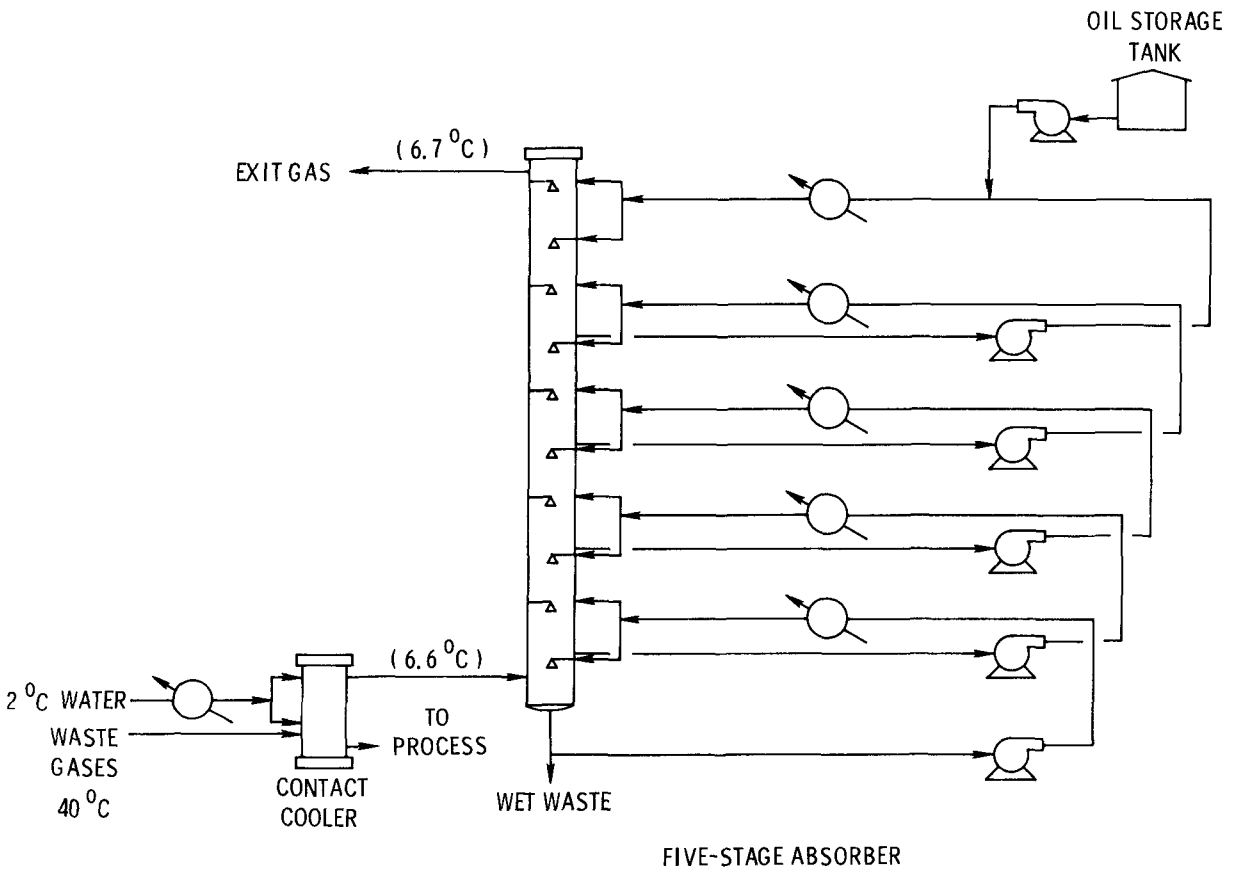

Figure 11. Combined control system for batch polykettles.

Flares

A flare is used at one plant to control organic emissions from the butadiene vent condenser. This device is simply a combined nozzle and ignition system attached to the vent. Vent gases pass through the nozzles and are ignited by the ignition system to provide a continuous flame for further combustion of vent gas. Steam may be injected into the flame region to provide oxygen for effective burning; and to enhance mixing of combustibles (33).

Table 17 gives an overview of emission control devices used in the neoprene industry along with the operating companies and reported control efficiencies for each device.

TABLE 17. CONTROL DEVICES AND THEIR EFFICIENCIES IN THE NEOPRENE INDUSTRY[a]

Emission point	Plant: Du Pont Louisville, KY[b]	Du Pont La Place, LA[b]	Denka Houston, TX (33)
Monomer fractionating columns	Water quench (89%) followed by -18°C Brine cooling (28%) Overall efficiency (92%)	-18°C Brine cooling (50%)	Oil adsorption (90%) Brine cooling (95%) Overall efficiency (99.5%)
Isomerizer	-[c]	-18°C Brine cooling (94%)	Brine cooling (81%)
Chloroprene condenser vent	-[c]	-18°C Brine cooling (95.6%)	Brine cooling (99%)
Batch polykettles	0°C Brine cooling (68%)	0°C Brine cooling (68%)	Direct-contact-cooler (43%) Oil adsorption (97%) Overall efficiency (98.4%)
Neoprene strippers	-18°C Brine cooling (99.9%)	-18°C Brine cooling (99.9%)	Brine cooling (99.8%)
Storage tanks Emulsion	Nitrogen blanket (40%)	Nitrogen blanket (40%)	-[c]
Other	Nitrogen blanket (40%)	Nitrogen blanket (40%)	-[c]
Butadiene vent condenser	-[c]	Flare (99.9%)	-[c]

[a]Control efficiency (%) given in parentheses.

[b]Personal communication with T. M. Nichols, Jr., DuPont, 13 September 1977.

[c]No control reported.

Process Modifications

Modification in process technology for neoprene manufacture is an important method of controlling hydrocarbon emissions. Hydrocarbon emissions have been reduced by 85% to 90% in two of the plants manufacturing neoprene by improving the efficiency of strippers used to separate unreacted chloroprene from neoprene latex. Attempts are being made by industry to reduce hydrocarbon emissions from the drying of neoprene film. One method would be to reduce the content of volatile hydrocarbons in the film before it is dried. Secondary condensers on isomerizer reactor vents, chloroprene vents, and refining columns have reduced hydrocarbon emissions from these sources by 50% to 90%. Current industry efforts to reduce hydrocarbon emissions during neoprene production are mainly directed in the area of process modifications.

HYDROGEN CHLORIDE

Waste chlorinated hydrocarbons that are produced during the manufacture of neoprene are disposed of at two of the neoprene plants by incineration. Hydrogen chloride emissions resulting from the incineration of chlorinated hydrocarbons are controlled with falling film absorbers.

Combustion gases leaving the incinerator are initially cooled from 1,330°C to 427°C in a graphite cooling chamber (19). The cooled gases enter a falling film absorber made of graphite and similar in design to a shell-and-tube heat exchanger. The combustion gases and the absorption liquid, which can be either weak acid or water, enter the tubes at the top of the absorber. Both gas and liquid are distributed evenly through each tube by means of a weir distribution system (36). As the gas and liquid flow concurrently through the tubes, hydrogen chloride is absorbed from the combustion gases by the weak acid or water. The heat produced by absorption is transferred to cooling water, which flows continuously through the shell surrounding the tubes of the absorber.

Gas from the final absorber enters a packed scrubber where the hydrogen chloride concentration is reduced to 5 ppm (19). The spent absorbing liquid, having a composition of 37% to 40% hydrochloric acid, can be used to make product hydrochloric acid or anhydrous hydrogen chloride (37). A typical falling film absorption system is shown in Figure 12 (36).

PARTICULATES (TALC)

The particulate emissions from the dusting of neoprene rope are comprised of talc dust. Talc is emitted from openings in buildings where neoprene dusting occurs. The building can be kept under negative pressure to reduce these fugitive losses. This is accomplished by a fan exhaust system which draws air from the inside of the building to the outside atmosphere via a system of duct work. As the contaminated air is drawn through the ductwork, talc particulates may be removed from the gas stream with wet scrubbers or fabric filters.

---

(36) Hulswitt, C. E. Adiabatic and Falling Film Absorption. Chemical and Engineering Progress, 69(2):50-52, 1973.

(37) Hulswitt, C. E. and J. A. Mraz. HCl Recovered from Chlorinated Organic Waste. Chemical Engineering, 79(11):80-81, 1972.

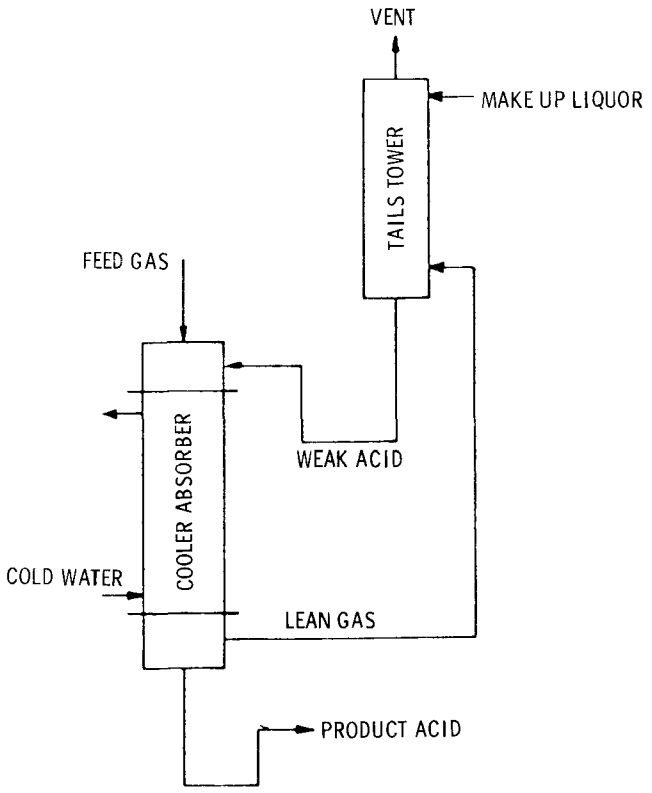

Figure 12. Falling film absorption system (36).

Wet Scrubbing

Wet scrubbers use a liquid (e.g., water) either to remove particulate matter directly from the gas stream by contact or to improve collection efficiency by preventing reentrainment. The mechanisms for particle removal are: 1) fine particles are conditioned to increase their effective size, enabling them to be collected more easily; and 2) the collected particles are trapped in a liquid film and washed away, reducing entrainment (38).

The effective particle size may be increased in two ways. First fine particles can act as condensation nuclei when the vapor passes through its dew point. Condensation can remove only a relative small amount of dust, since the amount of condensation required to remove high concentrations is usually prohibitive. Second, particles can be trapped on liquid droplets by impact using inertial forces. The following six mechanisms bring particulate matter into contact with liquid droplets (38):

(38) Control Techniques for Particulate Air Pollutants. NAPCA Publication No. AP-51 (PB 190 253), U.S. Department of Health, Education, and Welfare, Washington, D.C., January 1969. 215 pp.

Interception occurs when particles are carried by a gas in streamlines around an obstacle at distances which are less than the radius of the particles.

Gravitational force causes a particle, as it passes an obstacle, to fall from the streamline and settle on the surface of the obstacle.

Impingement occurs when an object, placed in the path of a particle-containing gas stream causes the gas to flow around it. The larger particles tend to continue in a straight path because of inertia and may impinge on the obstacle and be collected.

Diffusion results from molecular collisions and, hence, plays little part in the separation of particles from a gas stream.

Electrostatic forces occur when particles and liquid droplets become electrically charged.

Thermal gradients are important to the removal of matter from a particle-containing gas stream because particulate matter will move from a hot area to a cold area. This motion is caused by unequal gas molecular collision energy on the hot and cold surfaces of the particles and is directly proportional to the temperature gradient.

Wet scrubber efficiencies are compared on the bases of contacting power and transfer units. Contacting power is the useful energy expended in producing contact of the particulate matter with the scrubbing liquid. The contacting power represents pressure head loss across the scrubber, head loss of the scrubbing liquid, sonic energy or energy supplied by a mechanical rotor. The transfer unit (the numerical value of the natural logarithm of the reciprocal of the fraction of the dust passing through the scrubber) is a measure of the difficulty of separation of the particulate matter (38).

Spray Chamber--
The simplest type of wet scrubber is the spray chamber, a round or rectangular chamber into which water is sprayed either cocurrently, countercurrently, or crosscurrently to the gas stream. Liquid droplets travel in the direction of liquid flow until inertial forces are overcome by air resistance. Large droplets settle under the influence of gravity, while smaller droplets are swept along by the gas stream. These droplets and particulate matter may then be separated from the gas stream by gravitational settling, impaction on baffles, filtration through shallow packed beds, or by cyclonic action (38).

Gravity Spray Tower--
Another simple type of wet scrubber is the gravity spray tower in which liquid droplets fall downward through a countercurrent gas stream containing particulate matter. To avoid droplet entrainment, the terminal settling velocity of the droplets is greater than the velocity of the gas stream. Collection efficiency increases with decreasing droplet size and with increasing relative velocity between the droplets and air stream. Since these two conditions are mutually exclusive, there is an optimum droplet size for maximum efficiency: from 500 μm to 1,000 μm (38).

Centrifugal Spray Scrubbers--
An improvement on the gravity spray tower is the centrifugal spray scrubber (Figure 13). This type of wet scrubber increases the relative velocity between the droplets and gas stream by using the centrifugal force of a spinning gas stream. The spinning motion may be imparted by tangential entry of either the liquid or gas streams or by the use of fixed vanes and impellers (38).

Impingement Plate Scrubbers--
An impingement plate scrubber (Figure 14) consists of a tower equipped with one or more impingement stages, mist removal baffles, and spray chambers. The impingement stage consists of a perforated plate that has from 6,500 to 32,000 holes per square meter and a set of impingement baffles arranged so that a baffle is located above every hole. The perforated plate has a weir for control of its liquid level. The liquid flows over the plate and through a downcomer to a sump or lower stage. The gas enters in the lower sector of the scrubber and passes up through a spray zone created by a series of low pressure sprays. As the gas passes through the impingement stage, the high gas and particle velocity (2.25 m/s to 3 m/s) atomizes the liquid at the edges of perforations. The spray droplets, about 10 μm in diameter, increase fine dust collection (38).

Venturi Scrubbers--
High collection efficiency of fine particles by impingement requires small obstacle diameter and high relative velocity of the particle as it impinges on the obstacle. Venturi scrubbers (Figure 15) accomplish this by introducing the scrubbing liquid at right angles to a high velocity gas flow in the throat of a venturi where the velocity of the gas alone causes the disintegration of the liquid. Another factor which affects the efficiency of a venturi scrubber is the conditioning of the particles by con densation. If the gas in the reduced pressure region in the throat is saturated or supersaturated, the Joule-Thompson effect will cause condensation. This helps the particle to grow, and the wetness of the particle surface helps agglomeration and separation (38).

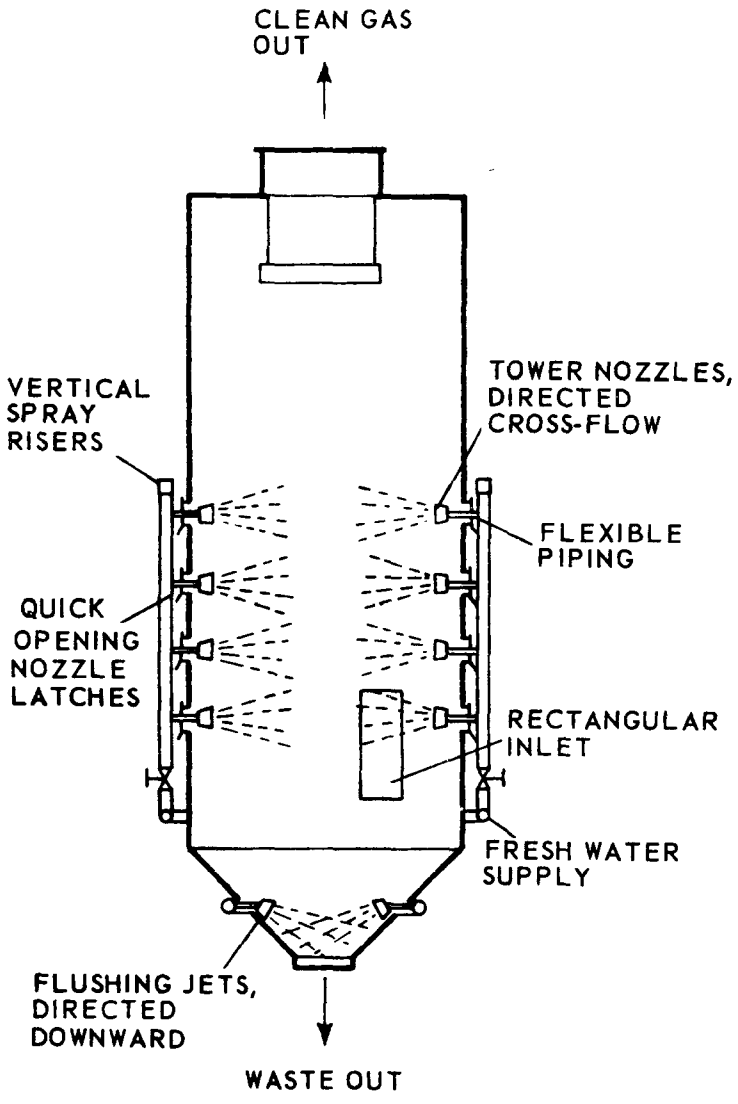

CYCLONIC SPRAY SCRUBBER.

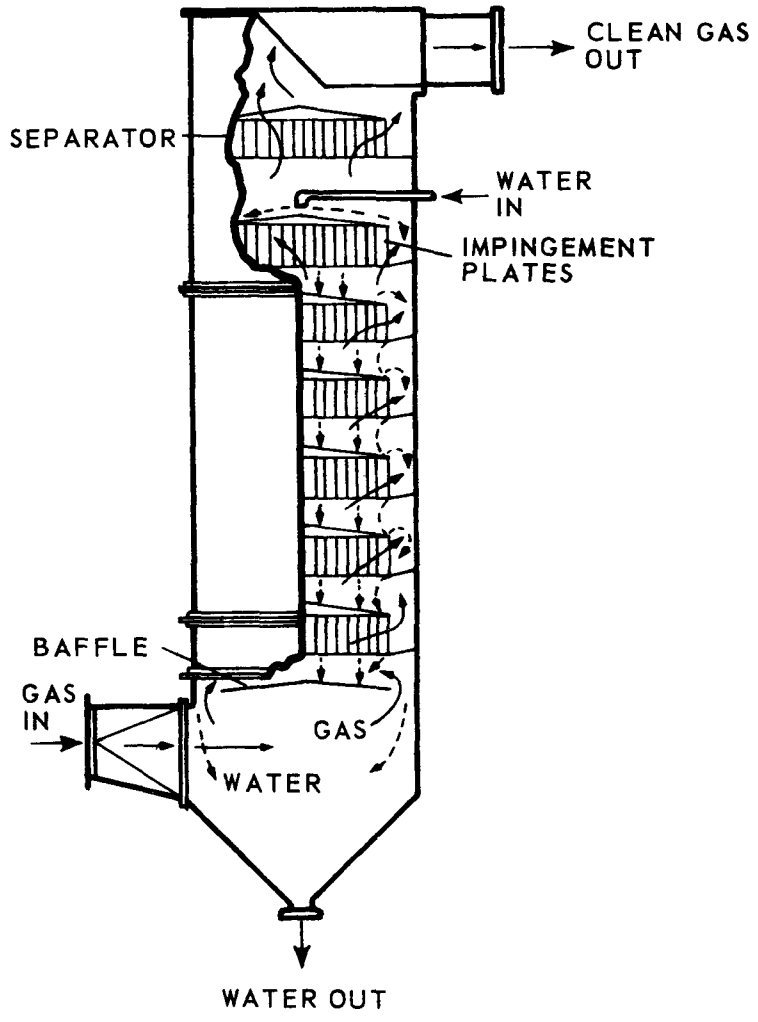

MULTI-WASH SCRUBBER.

Figure 13. Centrifugal spray scrubbers (38).

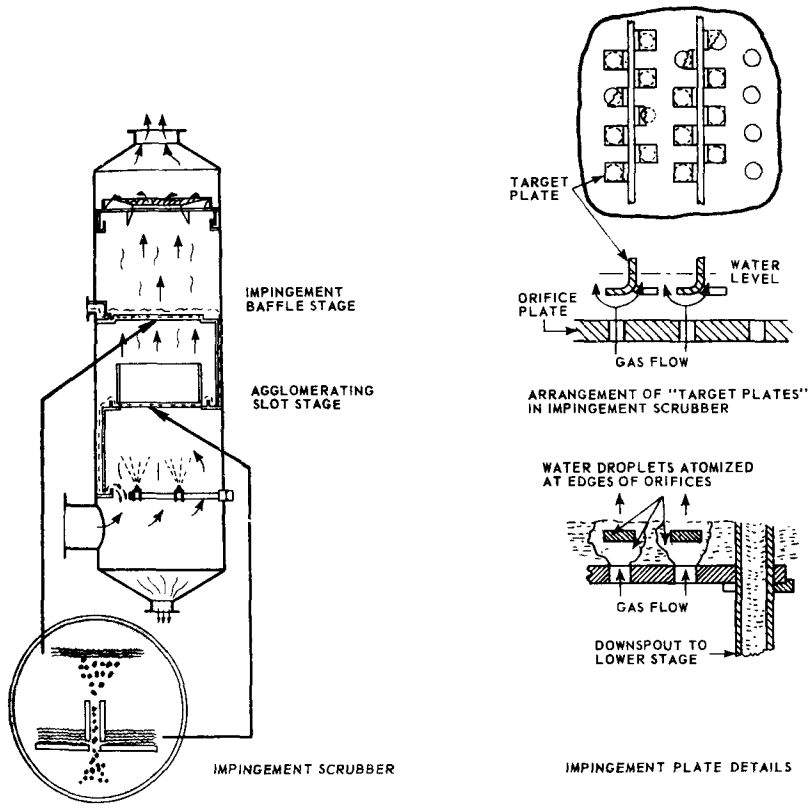

Figure 14. Impingement plate scrubber (38).

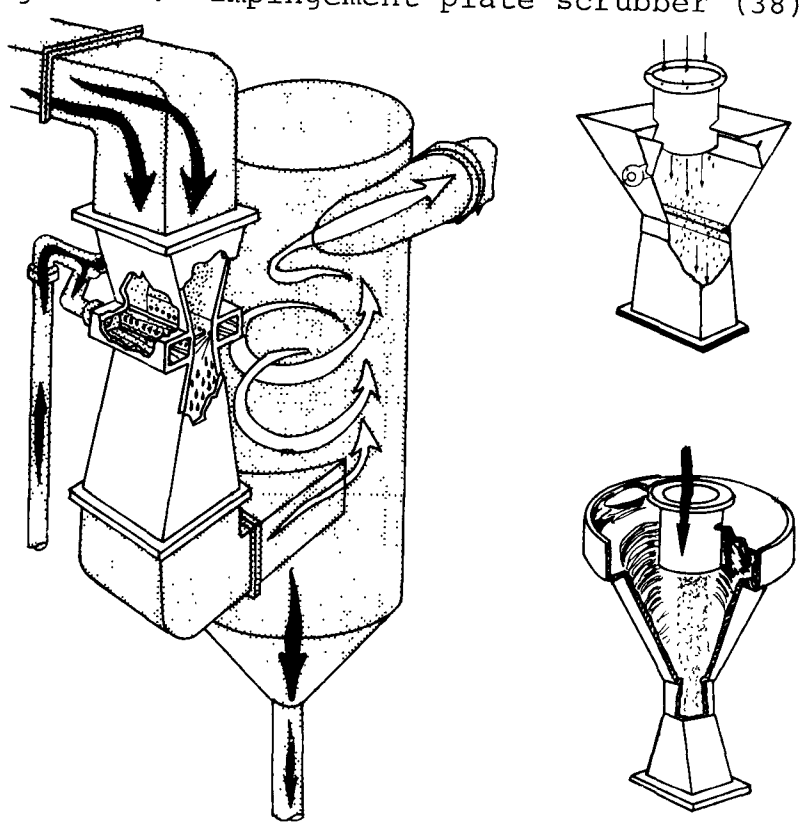

Figure 15. Venturi scrubber (38).

The irrigating liquid serves to wet, dissolve, and/or wash the entrained particulate matter from the bed. In general, smaller-diameter tower packing gives a higher particle target efficiency than larger-size packing for a given gas velocity (38).

Self-Induced Spray Scrubbers--
The self-induced spray scrubber uses a spray curtain for particle collection. The spray curtain is induced by gas flow through a partially submerged orifice or streamlined baffle. Baffles or swirl chambers are used to minimize mist carryover.

The chief advantage of the self-induced spray scrubber is its ability to handle high dust concentrations and concentrated slurries (38).

Mechanically Induced Spray Scrubbers--
Mechanically induced spray scrubbers use high velocity sprays generated at right angles to the direction of gas flow by a partially submerged rotor. Scrubbing is achieved by impaction of both high radial droplet velocity and vertical gas velocity. Advantages are the relatively low liquid requirements, small space requirements, high scrubbing efficiency, and high dust load capacity. The rotor, however, is susceptible to erosion from large particles and abrasive dusts (38).

Disintegrator Scrubber--
A disintegrator scrubber consists of a barred rotor with a barred stator. Water is injected axially through the rotor shaft and is separated into fine droplets by the high relative velocity of rotor and stator bars. Advantages of this scrubber are high efficiency for submicron particles and low space requirements. The primary disadvantage is its large power requirement (38).

Centrifugal Fan Wet Scrubber--
This type of scrubber (Figure 16) consists of a multiple-blade centrifugal blower. Its advantages are low space requirements, moderate power requirements, low water consumption, and a relatively high scrubbing efficiency (38).

Inline Wet Scrubber--
In the axial-fan-powered gas scrubber, a water spray and baffle screen wet the particles, and centrifugal fan action eliminates the wetted particles through concentric louvers. Advantages are low space requirements and low installation costs (38).

Irrigated Wet Filters--
Irrigated wet filters consist of an upper chamber, containing wet filters and spray nozzles for cleaning the gas, and a lower chamber for storing scrubbing liquid. Liquid is recirculated and sprayed into the surface of the filters on the upstream side of the bed. Two or more filter stages are used in series (38).

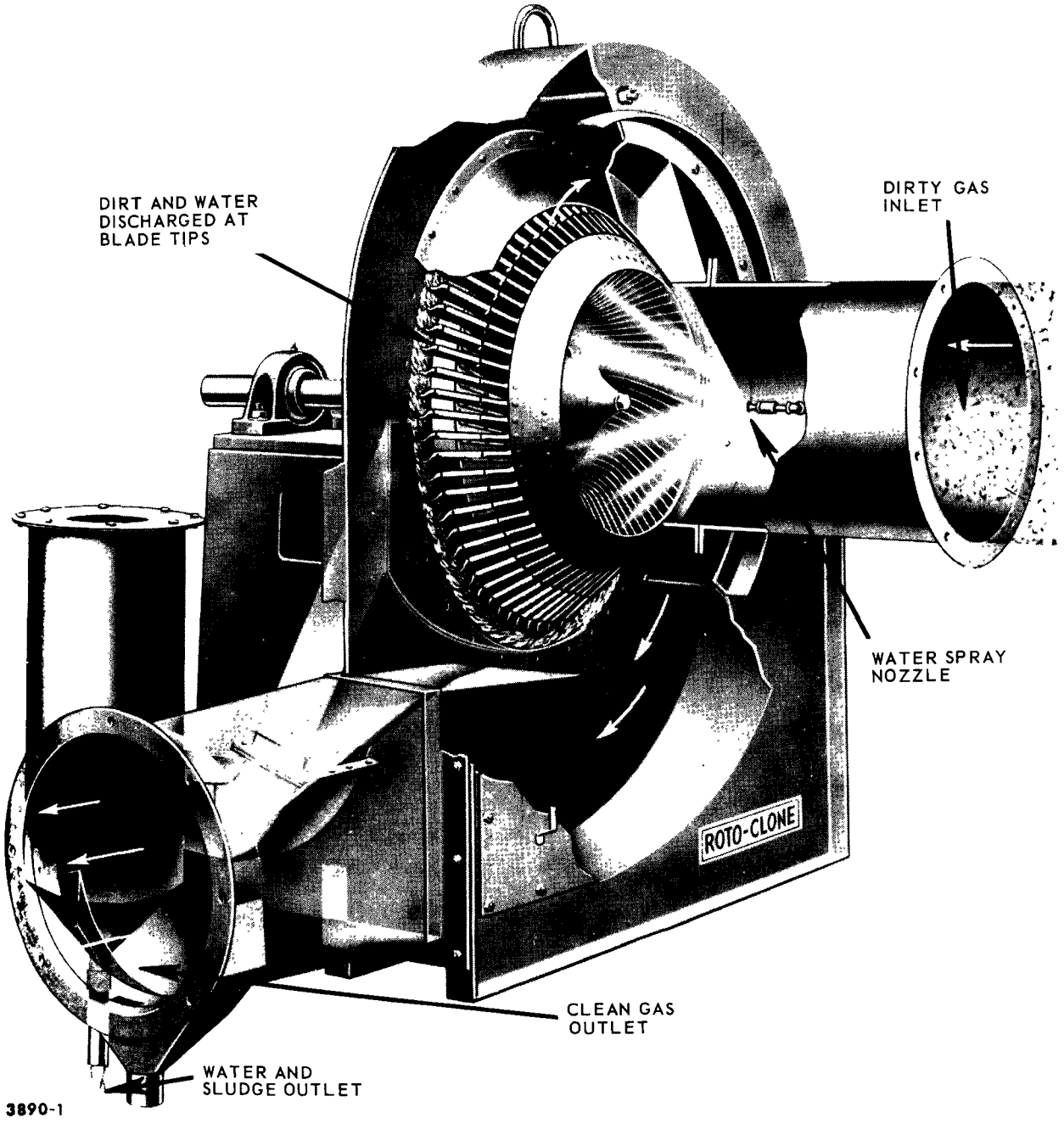

Figure 16. Centrifugal fan wet scrubber (38).

Fabric Filtration

Fabric filters use a filter medium to separate particulate matter from a gas stream. Two types of fabric filters are in use--high energy cleaned collectors and low energy cleaned collectors (39).

High Energy Collectors--
High energy collectors use pulse jets to clean the filter medium, a felt fabric which is kept as clean as possible (39). The principle of the pulse jet is based on the use of an air ejector for dislodging dust from the bags. The ejector produces a short pulse of compressed air in the direction opposite to that of the gas being filtered. The jet must accomplish three things (40):

- Stop the normal filtering flow.
- Transmit a burst of air to the filtration medium, giving it a vibratory shock.
- Create enough pressure in the bag to ensure a reversal of flow from the clean side to the dirty side of the bag.

Low Energy Collectors--
Low energy collectors use shaking or reverse air flow methods of cleaning. The filter base is a woven cloth that acts as a site on which the true filter medium, or dust cake, can build up (39).

---

(39) Frey, R. E. Types of Fabric Filter Installations. Journal of the Air Pollution Control Association, 24(12):1148-1150, 1974.

(40) Bakke, E. Optimizing Filter Parameters. Journal of the Air Pollution Control Association, 24(12):1150-1154, 1974.

SECTION 6

GROWTH AND NATURE OF THE INDUSTRY

PRESENT TECHNOLOGY

The neoprene industry has recently emerged from an industry-wide change of technology. Prior to 1970, Du Pont was the only domestic manufacturer of chloroprene/neoprene and all of their chloroprene facilities used acetylene as the raw material. In 1970, Denka brought its Houston plant on stream using butadiene technology. Since that time, Du Pont has also converted to the butadiene process. Thus, since the end of 1972, all chloroprene production has been based on butadiene (5, 41).

EMERGING TECHNOLOGY

Since the recent industry-wide conversion from acetylene-based to butadiene-based processes for chloroprene, there have been no reports of new technology in the U.S. literature. Reports of a modification of the butadiene route to chloroprene have been published in the British literature. This modification, using a mixed C_4 stream (free from isobutene and isobutane) as feed material, is based on the reaction:

$$CH_3\text{-}CH{=}CH\text{-}CH_3 + CH_2{=}CH\text{-}CH_2\text{-}CH_3 + Cl \rightarrow$$

$$Cl\text{-}CH_2\text{-}CH{=}CH\text{-}CH_3 \rightleftarrows CH_2{=}CH\text{-}CHCl\text{-}CH_3 + HCl \qquad (7)$$

This reaction will take place in parallel with the chlorination of butadiene. The ;monochlorobutene products are then thermally dehydrochlorinated to give butadiene and hydrogen chloride. The butadiene is then recycled to the chlorinator. This process, however, has only been demonstrated on a pilot scale (6).

INDUSTRY PRODUCTION TRENDS

Because of its combination of properties (i.e., tensile strength, resilience, abrasion resistance, and resistance to deterioration by oil, solvents, weather, oxygen, ozone, heat, and flame), neoprene vulcanizates are used in a wide variety of applications.

---

(41) Neoprene: Enter a Second Supplier. Chemical Week, 98(3): 19-20, 1966.

The major volume use for neoprene is in mechanical and automotive goods, such as hose, belts, tire sidewalls, and molded goods. Other end uses are wire and cable jackets, highway joint seals, bridge pads, soil pipe gaskets, roof and maintenance coatings, caulks and sealants, and adhesives. Neoprene latex is used for foams for mattresses, railroad journal box lubricators, fiber binders, and adhesives. Table 18 summarizes neoprene uses and the quantity of neoprene consumed in each (2, 3, 42).

TABLE 18. NEOPRENE END USES (42)
(1969 consumption)

End use	Consumption, 10^3 metric tons	Percent
Footwear, shoe products	2.27	3.85
Belts, belting	2.27	3.85
Hose	7.26	12.30
O-rings, packings, gaskets	2.27	3.85
Other mechanical goods and automotive uses	10.44	17.69
Adhesives, sealants, coatings	4.54	7.69
Rolls	0.45	0.76
Coated fabrics	1.82	3.08
Wire, cable	8.17	13.85
Latex	9.53	16.15
Other	9.99	16.93
TOTAL	59.01	100.00

Figure 17 is a neoprene industry growth curve showing both neoprene production and domestic consumption. The historical (1962-1972) growth rate of neoprene has been 2.9%/yr (43). This growth rate would have been much higher if ethylene-propylene rubber (EPDM) had not replaced neoprene in some automotive and mechanical goods because of its cost advantage. Indications are, however, that EPDM has replaced neoprene in all the applications that it can (43). Therefore, the neoprene growth rate for the future (through 1981) should be about 5%/yr (43). This growth of neoprene should result in a demand of 252 x 10^3 metric tons/yr in 1981. The industry emission growth factor, defined as the ratio of 1981 emissions to 1976 emissions however, is equal to 0.76. This ratio is due to the expected decrease in hydrocarbon emissions for neoprene plants. State air pollution agencies have

(42) Dworkin, D. Rubber: Slower is the 70's. Chemical Week, 106(11):56-64, 1970.

(43) Chemical Profile: Neoprene. Chemical Marketing Reporter, 204(14):9, 1973.

initiated compliance schedules for neoprene plants which call for a reduction of 50% in hydrocarbon emissions by 1979.

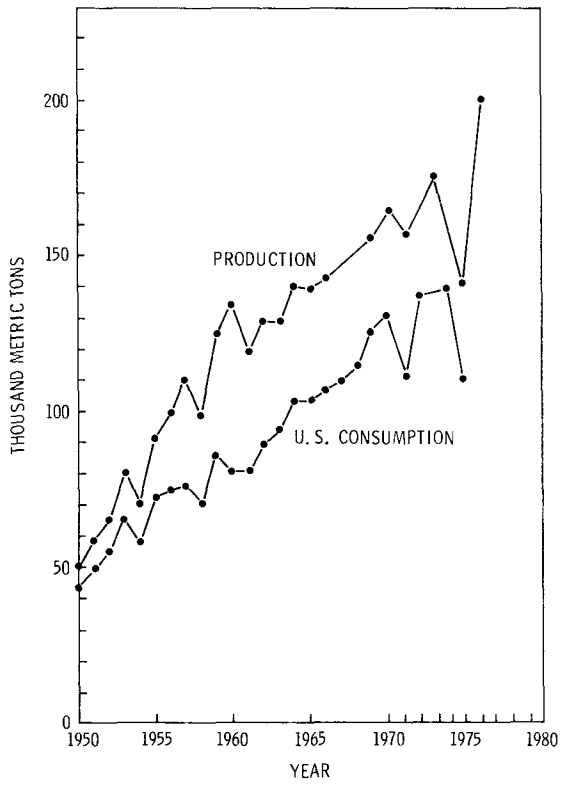

Figure 17. Neoprene product and consumption trends.

The neoprene market has several weaknesses. Although the average annual increase in demand from 1970 to 1973 was nearly three times that of the 1960's, the demand was a result of strong advances in automotive and construction uses (4). The recent softening in these two markets could result in a decline in the demand for neoprene.

Raw material shortages have also adversely affected neoprene. In 1973-1974, neoprene was on allocation due to shortages of butadiene and chlorine (43). This situation could reoccur with a tightening energy supply.

REFERENCES

1. Chemical Profile: Neoprene. Chemical Marketing Reporter, 210(7):9, 1976.

2. Kennedy, J. P. Polymer Chemistry of Synthetic Elastomers. Interscience Publishers, New York, New York, 1968. pp. 227-252.

3. Kirk-Othmer Encyclopedia of Chemical Technology, Second Edition, Vol. 7. John Wiley and Sons, Inc., New York, New York, 1967. pp. 705-716.

4. Brownstein, A. M. U.S. Petrochemicals, Technologies, Markets, and Economics. The Petroleum Publishing Company, Tulsa, Oklahoma, 1972. pp. 258-260.

5. Bellringer, F. J., and C. E. Hollis. Make Chloroprene from Butadiene. Hydrocarbon Processing, 47(11):127-130, 1968.

6. Crocker, H. P., C. W. Capp, and P. J. Bellringer. Process for the Production of Dichlorobutenes. British Patent 798,027 (to the Distillers Company, Ltd.,) July 16, 1958.

7. Kirk-Othmer Encyclopedia of Chemical Technology, Second Edition, Vol. 5. John Wiley and Sons, Inc., New York, New York, 1967. pp. 215-231.

8. Bellringer, F. J., and H. P. Crocker. Preparation of 3,4-Dichloro-1-butene. British Patent 800,787 (to The Distillers Company, Ltd.), September 3, 1958.

9. Sachowicz, S. K. Production of Chloroprene. U.S. Patent 3,026,360 (to The Distillers Company, Ltd.), March 20, 1962.

10. TLVs® Threshold Limit Values for Chemical Substances and Physical Agents in the Workroom Environment with Intended Changes for 1976. American Conference of Governmental Industrial Hygienists, Cincinnati, Ohio, 1976. 97 pp.

11. Chemical Engineers' Handbook, Fourth Edition. J. H. Perry and C. H. Chilton, eds. McGraw-Hill Book Company, New York, New York, 1963.

12. Handbook of Chemistry and Physics. R. C. Weast, ed. CRC Press, Cleveland, Ohio, 1973.

13. E. I. du Pont de Nemours and Company. Production of Dichlorobutenes. British Patent 661,806, November 28, 1951.

14. Bellringer, F. J., and H. P. Crocker. Production of Dichlorobutenes. British Patent 798,028 (to The Distillers Company, Ltd.), July 16, 1958.

15. Prescott, J. H. Butadiene to Neoprene Process Makes U.S. Debut. Chemical Engineering, 78(3):47-49, 1971.

16. Bellringer, F. J. Production and Stabilisation of Dichlorobutene. British Patent 877,586 (to The Distillers Company, Ltd.), September 13, 1961.

17. Capp, C. W. Improvements in the Production of Dichlorobutenes. British Patent 984,094 (to The Distillers Company, Ltd.), February 24, 1965.

18. Bellringer, F. J. Preparation of Chloroprene. British Patent 798,205 (to The Distillers Company, Ltd.), July 16, 1958.

19. Hot Option for the Disposal of Hydrocarbon Wastes. Chemical Week, 110(16):37-38, 1972.

20. Hollis, C. E. Chloroprene and Polychloroprene Rubbers. Chemistry and Industry (London), (31):1030-1041, 1969.

21. Billmeyer, F. J. Textbook of Polymer Science. Interscience Publishers, New York, New York, 1966. pp. 343-347.

22. Encyclopedia of Polymer Science and Technology. H. F. Mark, ed. John Wiley and Sons, Inc., New York, New York, 1966. pp. 801-827.

23. Fryling, C. F. Emulsion Polymerization Systems. In: Synthetic Rubber, G. S. Whitby, C. C. Davis, and R. F. Dunbrook, eds. John Wiley and Sons, Inc., New York, New York, 1954. pp. 224-258.

24. Neal, A. M., and L. R. Mayo. Neoprene. In: Synthetic Rubber, G. S. Whitby, C. C. Davis, and R. F. Dunbrook, eds. John Wiley and Sons, Inc., New York, New York, 1954. pp. 767-793.

25. Youker, M. A. Continuous Isolation of G.R.M. from Latex. Chemical Engineering Progress, 43(8):391-398, 1947.

26. Collins, A. M. U.S. Patent 1,967,865 (to E. I. duPont deNemours and Company), July 24, 1934.

27. Catton, N. L. The Neoprenes. E. I. duPont de Nemours and Company, Wilmington, Delaware, 1953. 245 pp.

28. Neoprene. Chemical Marketing Reporter, 207(13):30-41, 1975.

29. Sax, N. I. Dangerous Properties of Industrial Materials, Reinhold Book Corporation, New York, New York, 1968. 1258 pp.

30. Turner, D. B. Workbook of Atmospheric Dispersion Estimates. Public Health Service Publication No. 999-AP-26, U.S. Department of Health, Education, and Welfare, Cincinnati, Ohio, May 1970. 84 pp.

31. Eimutis, E. C. and R. P. Quill. Source Assessment: State-by-State Listing of Criteria Pollutant Emissions. EPA-600/2-77-107b, U.S. Environmental Protection Agency, Research Triangle Park, North Carolina, July 1977. 138 pp.

32. Hydrocarbon Pollutant Systems Study; Volume I, Stationary Sources, Effects, and Control. APTD-1499 (PB 219 073), U.S. Environmental Protection Agency, Research Triangle Park, North Carolina, 20 October 1972. 377 pp.

33. Pruessner, R. D. and L. D. Broz. Hydrocarbon Emission Reduction Systems. Chemical Engineering Progress, 73(8): 69-73, 1977.

34. Air Pollution Engineering Manual, Second Edition. J. A. Danielson, ed. Publication No. AP-40, U.S. Environmental Protection Agency, Research Triangle Park, North Carolina, May 1973. 987 pp.

35. Liptak, B. G. Environmental Engineer's Handbook, Vol. 2. Chilton Book Company, Radnor, Pennsylvania, 1974. 1340 pp.

36. Hulswitt, C. E. Adiabatic and Falling Film Absorption. Chemical and Engineering Progress, 69(2):50-52, 1973.

37. Hulswitt, C. E. and J. A. Mraz. HCl Recovered from Chlorinated Organic Waste. Chemical Engineering, 79(11):80-81, 1972.

38. Control Techniques for Particulate Air Pollutants. NAPCA Publication No. AP-51 (PB 190 253), U.S. Department of Health, Education, and Welfare, Washington, D.C., January 1969. 215 pp.

39. Frey, R. E. Types of Fabric Filter Installations. Journal of the Air Pollution Control Association, 24(12):1148-1150, 1974.

40. Bakke, E. Optimizing Filter Parameters. Journal of the Air Pollution Control Association, 24(12):1150-1154, 1974.

41. Neoprene: Enter a Second Supplier. Chemical Week, 98(3): 19-20, 1966.

42. Dworkin, D. Rubber: Slower is the 70's. Chemical Week, 106(11):56-64, 1970.

43. Chemical Profile: Neoprene. Chemical Marketing Reporter, 204(14):9, 1973.

44. Martin, D. O., and J. A. Tikvart. A General Atmospheric Diffusion Model for Estimating the Effects on Air Quality of One or More Sources. Presented at the 61st Annual Meeting of the Air Pollution Control Association, St. Paul, Minnesota, June 23-27, 1968. 18 pp.

45. Eimutis, E. C. and M. G. Konicek. Derivations of Continuous Functions of the Lateral and Vertical Atmospheric Dispersion Coefficients. Atmospheric Environment, 6(11): 859-863, 1972.

46. Tadmor, J., and Y. Gur. Analytical Expressions for the Vertical and Lateral Dispersion Coefficients in Atmospheric Diffusion. Atmospheric Environment, 3(6):688-689, 1969.

47. Gifford, F. A., Jr. An Outline of Theories of Diffusion in the Lower Layers of the Atmosphere. In: Meteorology and Atomic Energy 1968, Chapter 3, D. A. Slade, ed. Publication No. TID-24190, U.S. Atomic Energy Commission Technical Information Center, Oak Ridge, Tennessee, July 1968. pp. 113.

48. Code of Federal Regulations, Title 42 - Public Health, Chapter IV - Environmental Protection Agency, Part 410 - National Primary and Secondary Ambient Air Quality Standards, April 28, 1971. 16 pp.

APPENDIX A

CALCULATION OF EMISSION HEIGHT

Using the equation,

$$\chi_{max} = \frac{2\ Q}{\pi H^2 e\bar{u}} \tag{4}$$

for maximum ground level concentration,

where Q = emission rate, g/s
π = 3.14
H = emission height, m
e = 2.72
$\bar{u}$ = wind speed = 4.47 m/s

and further, $Q = E \cdot P$

where E = emission factor, g/kg
P = production rate, kg/s (constant)

we define χ_{max_i}, the maximum ground level concentration from the ith source as:

$$\chi_{max_i} = \frac{2\ E_i \cdot P}{\pi (H_i)^2 e\bar{u}} \tag{A-1}$$

Assume that the total ground level concentration is the sum of individual concentrations (a worst case assumption) from n sources. Then

$$\chi_{max,total} = \sum_{i=1}^{n} \chi_{max_i} = \sum_{i=1}^{n} \frac{2\ E_i \cdot P}{\pi (H_i)^2 e\bar{u}} = \frac{2\ P}{\pi e\bar{u}} \sum_{i=1}^{n} \frac{E_i}{(H_i)^2} \tag{A-2}$$

We define the total emission rate from the n sources as

$$Q_{total} = \sum_{i=1}^{n} Q_i = P \sum_{i=1}^{n} E_i \tag{A-3}$$

Then, for an average emission height $\overline{H}$, the maximum ground level concentration is

$$\chi_{max,total} = \frac{2\ Q_{total}}{\pi(\overline{H})^2 e\overline{u}} = \frac{2\ P}{\pi e\overline{u}} \frac{\Sigma E_i}{\overline{H}^2} \tag{A-4}$$

Equating expressions for $\chi_{max,total}$,

$$\frac{2\ P}{\pi e\overline{u}} \frac{\sum_{i=1}^{n} E_i}{\overline{H}^2} = \frac{2\ P}{\pi e\overline{u}} \sum_{i=1}^{n} \frac{E_i}{(H_i)^2} \tag{A-5}$$

Simplifying and solving for $\overline{H}^2$,

$$\overline{H}^2 = \frac{\sum_{i=1}^{n} E_i}{\sum_{i=1}^{n} \frac{E_i}{(H_i)^2}} \tag{A-6}$$

Therefore,

$$\overline{H} = \left(\frac{\sum_{i=1}^{n} E_i}{\sum_{i=1}^{n} \frac{E_i}{(H_i)^2}} \right)^{1/2} \tag{A-7}$$

Emissions height data for two industrial plants are shown in Tables A-1 and A-2. These data were used to calculate the average emission height values shown in Table 16, Section 4, page 34.

TABLE A-1. PLANT EMISSION HEIGHT DATA - PLANT A

Emission point	Emission height, m
Jet vent scrubber	27.4
Butadiene vent condenser	27.4
Dichlorobutene storage tank vents	6.7
Waste dichlorobutene tank vent	3.0[a]
Waste chloroprene tank vent	3.0[a]
Isomerizer reactor vent	26.8
Heels tank	7.6
Aqueous dichlorobutene isomerizer	17.7
Refined chloroprene tank vent	11.0
Chloroprene vent condenser	18.3
Vacuum column jet	18.9
Recycle chloroprene tank	8.5
Chloroprene solution makeup tank No. 1	15.5
Chloroprene solution makeup tank No. 2	15.5
Blend tank	10.1
Polykettle mix-hold tank	17.4
Polykettles	16.8
Strippers	14.3
Unstripped Emulsion storage vent tanks	16.2
Stripped Emulsion storage vent tank	11.0
Tank car vents	7.6
Solution makeup mix-hold tank	17.4
Emulsion storage mix-hold tank	16.2
Wash belts	10.1
Dryer exhaust	19.8
Dryer coolers	13.4
Bagger exhaust	11.6

[a]Estimated value.

TABLE A-2. PLANT EMISSION HEIGHT DATA - PLANT B

Emission point	Emission height, m
Chlorinated hydrocarbons incinerator	29.0
Storage tanks (3)	14.4
Tank car spots	7.61
CD refining columns	3.61
Storage tanks	4.6
Tanks	7.0
Vaporization from ditches	3.0[a]
Averaging basin	3.0[a]
Diversion basin	3.0[a]
Coagulation basin	3.0[a]
CD weigh tanks	9.75
Polymerizer fan discharges	23.5
Large polykettles	24.4
Stripper condenser recovery systems	7.92
Stripper feed and hold tanks	24.4
Vapor from aging tanks	14.3
Freeze roll feed tanks	20.1
Freeze roll feed tanks	20.1
Latex storage tanks, etc.	7
Washings pit	7.62
Dryer (main stacks)	23.2
Dryer ceiling	10.7
Large CD weigh tanks	8.8
Vapor from large polykettles	24.4
Continuous kettles	0.0
Stripper condenser recovery system	8.2
Stripper feed and hold tanks	24.4
Vapor from aging tanks	21.3
Vapor from blending tanks	3.0[a]
Freeze roll feed tanks	11.3
Washings pit	7.0
Dryer main stacks	23.2
Dryer main stacks	10.7
Wash mills	7.0

[a]Estimated value.

APPENDIX B

INDIVIDUAL PLANT EMISSION RATES

Emissions data for individual neoprene plants were obtained from state and local air pollution control agencies. Data were also provided by the individual companies manufacturing neoprene. Table B-1 is a list of the emission points and emission rates for plant A. Table B-2 is a list for plant B with data only for the polymer plant.

Relative error bounds for emission rate values for plant A could not be estimated because the method of determination was not reported.

Relative error values for plant B emissions data were estimated by assuming a standard deviation of 25% about the mean and triplicate analyses for all stack analyses. At a 95% confidence level, these assumptions lead to a ±50% relative error. Storage tank emission factors were calculated with an assumed relative error of ±20%.

TABLE B-1. NEOPRENE MANUFACTURING EMISSION RATES - PLANT A[a,b]

Emission point	Compound emitted, kg/day									
	Butadiene	Chloroprene	Dichlorobutene	Dodecyl mercaptan	Toluene	Acetic acid	Hydrogen chloride	Talc	Dimer	Nitrogen dioxide
Jet vent scrubber	15	55	3	--	--	--	--	--	--	--
Butadiene vent condenser	--	--	--	--	--	--	--	--	--	--
Dichlorobutene storage tank vents	--	--	1.3	--	--	--	--	--	--	--
Chloroprene waste tank vent	--	--	--	--	--	--	--	--	--	--
Isomerizer reactor vent	--	--	2.5	--	--	--	--	--	--	--
Heels tank	--	4.3	--	--	--	--	--	--	--	--
Aqueous waste vent	--	--	2.2	--	--	--	0.00128	--	--	--
Refined chloroprene tank vents	--	80	--	--	--	--	--	--	--	--
Chloroprene vent condenser	--	0.9	--	--	--	--	--	--	--	--
Vacuum column jet	--	55.5	--	--	--	--	--	--	--	0.1 ± 50%
Recycle chloroprene tank	--	0.8	--	--	--	--	--	--	--	--
Blend tanks	--	4.4	--	--	--	--	--	--	--	--
Polykettle mix-hold tank	--	--	--	--	--	--	--	--	--	--
Polykettles	--	132	--	--	2	--	--	--	--	--
Strippers	--	66	--	--	0.8	--	--	--	--	--
Tank car vent	--	5.7	--	--	--	--	--	--	--	--
Tank car vent	--	5.7	--	--	--	--	--	--	--	--
Solution makeup mix-hold tank	--	--	--	--	8.5	0.20	--	--	--	--
Emulsion storage mix-hold tank	--	44	--	--	--	--	--	--	--	--
Wash belts	--	15	--	1.3	20	--	--	--	--	--
Dryers	--	160	--	0.01	150	--	--	--	128	--
Bagger exhaust	--	--	--	--	--	--	--	36.5	--	--

[a]Dashes signify no reported emissions; hence, no emission rates.

[b]Data from state air pollution control agencies and industry.

TABLE B-2. NEOPRENE MANUFACTURING EMISSION RATES - PLANT B[a,b,c]

Emission point	Compound emitted, kg/day							
	Chloroprene	Tetrachlorobutane	Dimer	Toluene	Dodecyl mercaptan and miscellaneous chemicals	Hydrogen chloride	Nitrogen dioxide	Talc
Chloroprene vent condenser	--	--	--	--	--	0.745	--	--
Vacuum column jets	8.6	--	--	--	--	--	0.35 ± 50%	--
Refined chloroprene tank vent	26.5	--	--	--	--	--	--	--
Polykettles	363	--	--	6	--	--	--	--
Blend tanks	104	--	--	40	--	--	--	--
Wash belts	0	--	0	0	--	--	--	--
Dryers	103	--	169	945	81	--	--	--
Chlorinated hydrocarbons incinerator	--	--	--	--	--	5.4 ± 50%	--	--
Tank car vents	250	--	--	--	--	--	--	--
Strippers	220	--	--	5	--	--	--	--
Process wastewater	15	0.10	--	--	0.316	--	--	--
Bagger exhaust	--	--	--	--	--	--	--	1

[a]Dashes signify no reported emissions; hence, no emission rates.

[b]Data from state air pollution control agencies and industry.

[c]Excluding monomer plant.

APPENDIX C

DERIVATION OF SOURCE SEVERITY EQUATIONS

SUMMARY OF SEVERITY EQUATIONS

The severity of pollutants may be calculated using the mass emission rate, Q, the height of the emissions, H, or the distance from the source to the nearest plant boundary, D, and the threshold limit value, TLV. The equations summarized in Table C-1 are developed in detail in this appendix.

TABLE C-1. POLLUTANT SEVERITY EQUATIONS

Pollutant	Severity equation
For elevated sources:	
Particulate	$S = \frac{70\ Q}{H^2}$
SO_x	$S = \frac{50\ Q}{H^2}$
NO_x	$S = \frac{315\ Q}{H^{2.1}}$
Hydrocarbon	$S = \frac{162\ Q}{H^2}$
CO	$S = \frac{0.78\ Q}{H^2}$
Other	$S = \frac{5.5\ Q}{TLV \cdot H^2}$
For ground level sources:	
Particulate	$S = \frac{4{,}020\ Q}{D^{1.81}}$
SO_x	$S = \frac{2{,}870\ Q}{D^{1.81}}$
NO_x	$S = \frac{22{,}200\ Q}{D^{1.90}}$
Hydrocarbon	$S = \frac{9{,}340\ Q}{D^{1.81}}$
CO	$S = \frac{44.8\ Q}{D^{1.81}}$
Other	$S = \frac{316\ Q}{TLV \cdot D^{1.81}}$

DERIVATION OF χ_{max} FOR USE WITH U.S. AVERAGE CONDITIONS

The most widely accepted formula for predicting downwind ground level concentrations from a point source is (44):

$$\chi = \frac{Q}{\pi \sigma_y \sigma_z u} \exp\left[-\frac{1}{2}\left(\frac{y}{\sigma_y}\right)^2\right] \exp\left[-\frac{1}{2}\left(\frac{H}{\sigma_z}\right)^2\right] \qquad \text{(C-1)}$$

where χ = downwind ground level concentration at reference coordinate x and y with emission height of H, g/m^3
Q = mass emission rate, g/s
π = 3.14
σ_y = standard deviation of horizontal dispersion, m
σ_z = standard deviation of vertical dispersion, m
u = wind speed, m/s
y = horizontal distance from centerline of dispersion, m
H = height of emission release, m
x = downwind dispersion distance from source of emission release, m

We assume that χ_{max} occurs when $x >> 0$ and $y = 0$. For a given stability class, standard deviations of horizontal and vertical dispersion have often been expressed as a function of downwind distance by power law relationships as follows (44):

$$\sigma_y = ax^b \qquad \text{(C-2)}$$

$$\sigma_z = cx^d + f \qquad \text{(C-3)}$$

Values for a, b, c, d, and f are given in Tables C-2 and C-3 (45). Substituting these general equations into Equation C-1 yields:

$$\chi = \frac{Q}{ac\pi u x^{b+d} + a\pi u f x^b} \exp\left[-\frac{H^2}{2(cx^d + f)^2}\right] \qquad \text{(C-4)}$$

---

(44) Martin, D. O., and J. A. Tikvart. A General Atmospheric Diffusion Model for Estimating the Effects on Air Quality of One or More Sources. Presented at the 61st Annual Meeting of the Air Pollution Control Association, St. Paul, Minnesota, June 23-27, 1968. 18 pp.

(45) Eimutis, E. C. and M. G. Konicek. Derivations of Continuous Functions of the Lateral and Vertical Atmospheric Dispersion Coefficients. Atmospheric Environment, 6(11):859-863, 1972.

TABLE C-2. VALUES OF a FOR THE COMPUTATION OF σ_y[a] (45)

Stability class	a
A	0.3658
B	0.2751
C	0.2089
D	0.1471
E	0.1046
F	0.0722

[a]For the equation

$$\sigma_y = ax^b$$

where x = downwind distance
b = 0.9031 (from Reference 46)

TABLE C-3. VALUES OF THE CONSTANTS USED TO ESTIMATE VERTICAL DISPERSION[a] (44)

Usable range, m	Stability class	Coefficient		
		c_1	d_1	f_1
>1,000	A	0.00024	2.094	-9.6
	B	0.055	1.098	2.0
	C	0.113	0.911	0.0
	D	1.26	0.516	-13
	E	6.73	0.305	-34
	F	18.05	0.18	-48.6
		c_2	d_2	f_2
100 to 1,000	A	0.0015	1.941	9.27
	B	0.028	1.149	3.3
	C	0.113	0.911	0.0
	D	0.222	0.725	-1.7
	E	0.211	0.678	-1.3
	F	0.086	0.74	-0.35
		c_3	d_3	
<100	A	0.192	0.936	
	B	0.156	0.922	
	C	0.116	0.905	
	D	0.079	0.881	
	E	0.063	0.871	
	F	0.053	0.814	

[a]For the equation

$$\sigma_z = cx^d + f$$

(46) Tadmor, J., and Y. Gur. Analytical Expressions for the Vertical and Lateral Dispersion Coefficients in Atmospheric Diffusion. Atmospheric Environment, 3(6):688-689, 1969.

Assuming that χ_{max} occurs at x<100 m or the stability class is C, then f = 0 and Equation C-4 becomes:

$$\chi = \frac{Q}{ac\pi ux^{b+d}} \exp\left[\frac{-H^2}{2c^2x^{2d}}\right] \tag{C-5}$$

For convenience, let:

$$A_R = \frac{Q}{ac\pi u} \text{ and } B_R = \frac{-H^2}{2c^2}$$

so that Equation C-5 reduces to:

$$\chi = A_R x^{-(b+d)} \exp\left[\frac{B_R}{x^{2d}}\right] \tag{C-6}$$

Taking the first derivative of Equation C-6

$$\frac{d\chi}{dx} = A_R \left\{ x^{-b-d}\left(\exp\left[B_R x^{-2d}\right]\right)\left(-2dB_R x^{-2d-1}\right) + \exp\left[B_R x^{-2d}\right]\left(-b-d\right)x^{-b-d-1}\right\} \tag{C-7}$$

and settling this equal to zero (to determine the roots which give the minimum and maximum conditions of χ with respect to x) yields:

$$\frac{d\chi}{dx} = 0 = A_R x^{-b-d-1}\left(\exp\left[B_R x^{-2d}\right]\right)\left[-2dB_R x^{-2d}-b-d\right] \tag{C-8}$$

Since we define that $x \neq 0$ or ∞ at χ_{max}, the following expression must be equal to 0:

$$-2dB_R x^{-2d}-d-b = 0 \tag{C-9}$$

or

$$(b+d)x^{2d} = -2dB_R \tag{C-10}$$

or

$$x^{2d} = \frac{-2dB_R}{b+d} = \frac{2d\ H^2}{2c^2(b+d)} \tag{C-11}$$

or

$$x^{2d} = \frac{d\ H^2}{c^2\,(b+d)} \qquad \text{(C-12)}$$

or

$$x = \left(\frac{d\ H^2}{c^2\,(b+d)}\right)^{1/2d} \text{ at } \chi_{max} \qquad \text{(C-13)}$$

Thus Equations C-2 and C-3 become:

$$\sigma_y = a\left(\frac{d\ H^2}{c^2\,(d+b)}\right)^{\frac{b}{2d}} \qquad \text{(C-14)}$$

$$\sigma_z = c\left(\frac{d\ H^2}{c^2\,(b+d)}\right)^{\frac{d}{2d}} = \left(\frac{d\ H^2}{b+d}\right)^{1/2} \qquad \text{(C-15)}$$

The maximum will be determined for U.S. average conditions of stability. According to Gifford (47), this is when $\sigma_y = \sigma_z$.

Since b = 0.9031, and upon inspection of Table C-2 under U.S. average conditions, $\sigma_y = \sigma_z$, it can be seen that $0.881 \leq d \leq 0.905$ (class C stability[a]). Thus, it can be assumed that b is nearly equal to d or:

$$\sigma_z = \frac{H}{\sqrt{2}} \qquad \text{(C-16)}$$

and

$$\sigma_y = \frac{a}{c}\,\frac{H}{\sqrt{2}} \qquad \text{(C-17)}$$

Under U.S. average conditions, $\sigma_y = \sigma_z$ and $a \cong c$ if $b \cong d$ and f = 0 (between class C and D, but closer to belonging in class C).

---

[a]The values given in Table C-3 are mean values for stability class. Class C stability describes these coefficients and exponents, only within about a factor of two (44).

- - - - - - - - - -

(47) Gifford, F. A., Jr. An Outline of Theories of Diffusion in the Lower Layers of the Atmosphere. In: Meterology and Atomic Energy 1968, Chapter 3, D. A. Slade, ed. Publication No. TID-24190, U.S. Atomic Energy Commission Technical Information Center, Oak Ridge, Tennessee, July 1968. pp. 113.

Then

$$\sigma_y = \frac{H}{\sqrt{2}} \tag{C-18}$$

Substituting for σ_y and σ_z into Equation C-1 and letting y = 0:

$$\chi_{max} = \frac{2\ Q}{\pi u H^2} \exp\left[-\ \frac{1}{2}\left(\frac{H\sqrt{2}}{H}\right)^2\right] \tag{C-19}$$

or

$$\chi_{max} = \frac{2\ Q}{\pi e u H^2} \tag{C-20}$$

For ground level sources (H = 0), χ_{max} occurs by definition at the nearest plant boundary or public access. Since this occurs when y = 0, Equation C-1 becomes:

$$\chi = \frac{Q}{\pi \sigma_y \sigma_z u} \tag{C-21}$$

From the foregoing analysis of U.S. average conditions, class C stability coefficients are the best first approximations to U.S. average conditions when $\sigma_y = \sigma_z$.

By letting D equal the distance to the occurrence of χ_{max} (see Tables C-2 and C-3),

$$\sigma_y = 0.209\ D^{0.9031} \tag{C-22}$$

$$\sigma_z = 0.113\ D^{0.911} \tag{C-23}$$

Thus, χ_{max} is determined as follows:

$$\chi_{max} = \frac{42.36\ Q}{\pi u D^{1.814}} \tag{C-24}$$

It will be noted that Equations C-24 and C-20 are identical with the algebraic substitution of

$$H^2 = 0.01737\ D^{1.814} \tag{C-25}$$

For U.S. average conditions u = 4.47 m/s so that Equation C-20 reduces to:

$$\chi_{max} = \frac{0.0524\ Q}{H^2} \qquad \text{(C-26)}$$

DEVELOPMENT OF SOURCE SEVERITY

The general source severity, S, relationship has been defined as follows:

$$S = \frac{\bar{\chi}_{max}}{F} \qquad \text{(C-27)}$$

where $\bar{\chi}_{max}$ = time-averaged maximum ground level concentration
F = hazard factor

Noncriteria Emissions

The value of $\bar{\chi}_{max}$ may be derived from χ_{max}, an undefined "short term" (t_o) concentration. An approximation for longer term (t) concentration may be made as follows (44):

For a 24 hour time period,

$$\bar{\chi}_{max} = \chi_{max} \left(\frac{t_o}{t}\right)^{0.17} \qquad \text{(C-28)}$$

or

$$\bar{\chi}_{max} = \chi_{max} \left(\frac{3\ \text{min}}{1{,}440\ \text{min}}\right)^{0.17} \qquad \text{(C-29)}$$

$$\bar{\chi}_{max} = \chi_{max}\ (0.35) \qquad \text{(C-30)}$$

Since the hazard factor is defined and derived from TLV values as follows:

$$F = (\text{TLV}) \left(\frac{8}{24}\right)\left(\frac{1}{100}\right) \qquad \text{(C-31)}$$

$$F = (3.33 \times 10^{-3})\ \text{TLV} \qquad \text{(C-32)}$$

then the severity factor, S, is defined as:

$$S = \frac{\bar{\chi}_{max}}{F} = \frac{(0.35)\chi_{max}}{(3.33 \times 10^{-3})\ \text{TLV}} \qquad \text{(C-33)}$$

$$S = \frac{105\ \chi_{max}}{TLV} \tag{C-34}$$

If a weekly averaging period is used, then:

$$\bar{\chi}_{max} = \chi_{max} \left(\frac{3}{10,080}\right)^{0.17} \tag{C-35}$$

or

$$\bar{\chi}_{max} = (0.25)\chi_{max} \tag{C-36}$$

and

$$F = (TLV)\left(\frac{40}{168}\right)\left(\frac{1}{100}\right) \tag{C-37}$$

$$F = (2.38 \times 10^{-3})TLV \tag{C-38}$$

and the severity factor, S, is:

$$S = \frac{\bar{\chi}_{max}}{F} = \frac{(0.25)\chi_{max}}{(2.38 \times 10^{-3})TLV} \tag{C-39}$$

or

$$S = \frac{105\chi_{max}}{TLV} \tag{C-40}$$

which is entirely consistent, since the TLV is being corrected for a different exposure period.

Therefore, the severity can be derived from χ_{max} directly without regard to averaging time for noncriteria emissions. Thus, combining Equations C-40 and C-26, for elevated sources, gives:

$$S = \frac{5.5\ Q}{TLV \cdot H^2} \tag{C-41}$$

Criteria Emissions

For the criteria pollutants, established standards may be used as F values in Equation C-27. These are given in Table C-4. However, Equation C-28 must be used to give the appropriate averaging period. These equations are developed for elevated sources using Equation C-26.

TABLE C-4. SUMMARY OF NATIONAL AMBIENT AIR QUALITY STANDARDS (48)

Pollutant	Averaging time	Primary standards	Secondary standards
Particulate matter	Annual (geometric mean)	75 $\mu g/m^3$	60[a] $\mu g/m^3$
	24-hour[b]	260 $\mu g/m^3$	160 $\mu g/m^3$
SO_x	Annual (arithmetic mean)	80 $\mu g/m^3$	60 $\mu g/m^3$
	24-hour[b]	365 $\mu g/m^3$	260[c] $\mu g/m^3$
	3-hour[b]	-	1,300 $\mu g/m^3$
Carbon monoxide	8-hour[b]	10 mg/m^3	
	1-hour[b]	40,000 $\mu g/m^3$	(Same as primary)
Nitrogen dioxide	Annual (arithmetic mean)	100 $\mu g/m^3$	(Same as primary)
Photochemical oxidants	1-hour[b]	160 $\mu g/m^3$	(Same as primary)
Hydrocarbons (nonmethane)	3-hour (6 a.m. to 9 a.m.)	160 $\mu g/m^3$[d]	(Same as primary)

[a]The secondary annual standard (60 $\mu g/m^3$) is a guide for assessing implementation plans to achieve the 24-hour secondary standard.

[b]Not to be exceeded more than once per year.

[c]The secondary annual standard (260 $\mu g/m^3$) is a guide for assessing implementation plans to achieve the annual standard.

[d]There is no primary ambient air quality standard for hydrocarbons. The value of 160 $\mu g/m^3$ used for hydrocarbons in this report is a recommended guideline for meeting the primary ambient air quality standard for photochemical oxidants.

(48) Code of Federal Regulations, Title 42 - Public Health, Chapter IV - Environmental Protection Agency, Part 410 - National Primary and Secondary Ambient Air Quality Standards, April 28, 1971. 16 pp.

CO Severity--
The primary standard for CO is reported for a 1-hr averaging time. Therefore,

$$t_L = 60 \text{ min}$$

$$t_{max} = 3 \text{ min}$$

$$\bar{\chi}_{max} = \chi_{max}\left(\frac{3}{60}\right)^{0.17} \quad \text{(C-42)}$$

$$= \frac{2\ Q}{\pi e u H^2}\left(\frac{3}{60}\right)^{0.17} \quad \text{(C-43)}$$

$$= \frac{2\ Q}{(3.14)(2.72)(4.5)H^2}\ (0.6) \quad \text{(C-44)}$$

$$\bar{\chi}_{max} = \frac{0.052\ Q}{H^2}\ (0.6) \quad \text{(C-45)}$$

$$\bar{\chi}_{max} = \frac{(3.12 \times 10^{-2})Q}{H^2} \quad \text{(C-46)}$$

$$\text{Severity, } S = \frac{\bar{\chi}_{max}}{F} \quad \text{(C-47)}$$

Setting F equal to the primary standard for CO, i.e., 0.04 g/m^3 yields:

$$S = \frac{\bar{\chi}_{max}}{F} = \frac{(3.12 \times 10^{-2})Q}{0.04\ H^2} \quad \text{(C-48)}$$

or

$$S_{CO} = \frac{0.78\ Q}{H^2} \quad \text{(C-49)}$$

Hydrocarbon Severity--
The primary standard for hydrocarbon is reported for a 3-hr averaging time.

$$t_L = 180 \text{ min}$$

$$t_{max} = 3 \text{ min}$$

$$\bar{\chi}_{max} = \chi_{max} \left(\frac{3}{180}\right)^{0.17} \tag{C-50}$$

$$= 0.5\chi_{max} \tag{C-51}$$

$$= \frac{(0.5)(0.052)\ Q}{H^2} \tag{C-52}$$

$$\bar{\chi}_{max} = \frac{0.026\ Q}{H^2} \tag{C-53}$$

For hydrocarbons, $F = 1.6 \times 10^{-4}$ g/m^3 (see Table 12)

and

$$S = \frac{\bar{\chi}_{max}}{F} = \frac{0.026\ Q}{1.6 \times 10^{-4}\ H^2} \tag{C-54}$$

or

$$S_{HC} = \frac{162.5\ Q}{H^2} \tag{C-55}$$

Particulate Severity--
The primary standard for particulate is reported for a 24-hr averaging time.

$$\bar{\chi}_{max} = \chi_{max} \left(\frac{3}{1,440}\right)^{0.17} \tag{C-56}$$

$$= \frac{(0.052)\ Q\ (0.35)}{H^2} \tag{C-57}$$

$$\bar{\chi}_{max} = \frac{(0.0182)\ Q}{H^2} \tag{C-58}$$

For particulates, $F = 2.6 \times 10^{-4}$ g/m^3

$$S = \frac{\bar{\chi}_{max}}{F} = \frac{0.0182\ Q}{2.6 \times 10^{-4}\ H^2} \tag{C-59}$$

$$S_P = \frac{70\ Q}{H^2} \tag{C-60}$$

SO_x Severity--
The primary standard for SO_x is reported for a 24-hr averaging time.

$$\bar{\chi}_{max} = \frac{(0.0182)\ Q}{H^2} \tag{C-61}$$

The primary standard is 3.65×10^{-4} g/m^3.

and

$$S = \frac{\bar{\chi}_{max}}{F} = \frac{(0.0182)Q}{3.65 \times 10^{-4}\ H^2} \tag{C-62}$$

or

$$S_{SO_x} = \frac{50\ Q}{H^2} \tag{C-63}$$

NO_x Severity--
Since NO_x has a primary standard with a 1-yr averaging time, the χ_{max} correction equation cannot be used. As an alternative, the following equation was selected:

$$\bar{\chi} = \frac{2.03\ Q}{\sigma_z ux} \exp\left[-\frac{1}{2}\left(\frac{H}{\sigma_z}\right)\right]^2 \tag{C-64}$$

A difficulty arises, however, because a distance x, from emission point to receptor, is included and hence, the following rationale is used:

The equation $\chi_{max} = \frac{2\ Q}{\pi euH^2}$

is valid for neutral conditions or when $\sigma_z \cong \sigma_y$. This maximum occurs when

$$H \cong \sqrt{2}\sigma_z$$

and since, under these conditions,

$$\sigma_z = ax^b$$

then the distance, x_{max}, where the maximum concentration occurs is:

$$x_{max} = \left(\frac{H}{\sqrt{2a}}\right)^{\frac{1}{b}}$$

For class C conditions,

$$a = 0.113$$

$$b = 0.911$$

Simplifying Equation C-64,

since

$$\sigma_z = 0.113\ x_{max}^{0.911}$$

and

$$u = 4.5\ m/s$$

Letting $x = x_{max}$ in Equation C-64,

$$\bar{\chi} = \frac{4\ Q}{x_{max}^{1.911}} \exp\left[-\ \frac{1}{2}\left(\frac{H}{\sigma_z}\right)^2\right] \qquad \text{(C-65)}$$

where

$$x_{max} = \left(\frac{H}{0.16}\right)^{1.098} \qquad \text{(C-66)}$$

$$x_{max} = 7.5\ H^{1.098} \qquad \text{(C-67)}$$

and

$$\frac{4\ Q}{x_{max}^{1.911}} = \frac{4\ Q}{(7.5\ H^{1.098})^{1.911}} \qquad \text{(C-68)}$$

Therefore

$$\bar{\chi} = \frac{0.085\ Q}{H^{2.1}} \exp\left[-\ \frac{1}{2}\left(\frac{H}{\sigma_z}\right)^2\right] \qquad \text{(C-69)}$$

$$\sigma_z = 0.113x^{0.911} \qquad \text{(C-70)}$$

$$\sigma_z = 0.113\ (7.5\ H^{1.1})^{0.911} \tag{C-71}$$

$$\sigma_z = 0.71\ H \tag{C-72}$$

Therefore,

$$\bar{\chi} = \frac{0.085\ Q}{H^{2.1}} \exp\left[-\frac{1}{2}\left(\frac{H}{0.71\ H}\right)^2\right] \tag{C-73}$$

$$= \frac{0.085\ Q}{H^{2.1}}\ (0.371) \tag{C-74}$$

$$\bar{\chi} = \frac{3.15 \times 10^{-2}\ Q}{H^{2.1}} \tag{C-75}$$

Since the NO_x standard is 1.0×10^{-4} g/m^3, the NO_x severity equation is:

$$S_{NO_x} = \frac{(3.15 \times 10^{-2})\ Q}{1 \times 10^{-4}\ H^{2.1}} \tag{C-76}$$

$$S_{NO_x} = \frac{315\ Q}{H^{2.1}} \tag{C-77}$$

APPENDIX D

COMMENTS BY
E. I. DU PONT DE NEMOURS & CO.
ON
JULY 1977 DRAFT OF SOURCE ASSESSMENT DOCUMENT: POLYCHLOROPRENE STATE-OF-THE-ART

The Du Pont Company believes that the simulation approach used in this document to define severity of stationary air pollution sources overestimates source severities conservatively by a factor of 10 to 50. The source severity approach is an oversimplification which does not represent the actual effect of point sources on air quality and cannot be used as an absolute measure of the "severity" of a source.

We note that these comments apply to all source assessment documents where this methodology has been used.

Our concern focuses on the following major areas:

- The corrected Threshold Limit Value, F, applies safety factors which are excessive when compared to Ambient Air Quality Standards.
- No plume rise is used for emission sources.
- All sources are considered to emit from a single point, rather than from widely separated locations.
- The simplified dispersion formula gives erroneous results for the wind speed and stability used.
- The peak-to-mean averaging time factors are incorrect for point sources at the atmospheric stability used.
- Consideration is not given to the location of the predicted maximum concentration with respect to plant boundaries.
- The source severity dispersion analysis includes all sources emitting at their maximum rates while, in fact, the chloroprene process with the exception of the chloroprene isolation is a batch process where vessels vent sequentially - not at one time.

Each of these overly conservative or incorrect simplifications leads to a significant error. When these errors are compounded, unrealistically severe assessments of source impact result, as shown in more detail below.

Comments on July 1977 Draft Document by Page Number

Section IV - Emissions

Page 28

Equation (4)

In this simplified equation, the term $\frac{\sigma_z}{\sigma_y}$ is missing as indicated below.

$$\text{Max.} = \frac{20}{\pi h^2 e \bar{u}} \left(\frac{\sigma_z}{\sigma_y} \right)$$

For neutral conditions (D stability) at which the average wind speed of approximately 15 ft/sec (4.47 m/s = 14.7 ft/sec) applies, σ_z / σ_y is about 0.5.[1] Consequently, this equation overestimates concentrations by about 100%. Even under C stability, as apparently used, the ratio is 0.6.

In addition, the emission height, h, is the stack height with no credit given for plume rise due to velocity or buoyancy. Plume rise is an important factor in the dispersion attained by larger sources, as the neoprene dryers. The following table shows the error in calculated ground-level concentrations if plume rise is not considered.

Error in $\bar{\chi}$ if Plume Rise Omitted
15 Ft/Sec Wind Speed - Neoprene Dryers

Case	h	h^2
A. No plume rise	65 ft	4,225 ft^2
B. Plume rise (Bosanquet-Carey-Halton)	115 ft	13,225 ft^2

$$\frac{\bar{\chi}_A}{\bar{\chi}_B} = \frac{h_B^2}{h_A^2} = 3.1 \quad \text{(From Equation 1)}$$

Consequently, the maximum ground-level concentration is overpredicted by a factor of three in this case.

In addition as described in Appendix A, page 53, it was assumed that the total ground-level concentration is the sum of individual concentrations. This is a grossly inaccurate oversimplification of a complex situation. Maxima will fall at different locations (some within the plant boundary) at different wind speeds. We estimate that predictions by this method could be high by a factor of 20 to 80.

Page 29

Equation (5)

Our experience is that the exponent used in this time correlation greatly overestimates maximum longer term ambient concentrations produced by point sources. The 0.17 exponent is best applied to highly stable atmospheres or to air mass peak to mean ratios. We find a factor of about 0.35 is more appropriate, which corresponds to neutral wind speed used. This is also in agreement with the time factors by Smith.[2/]

Error in Time Conversion Factor

Exponent	Time Period Conversion 3-Min to 3-Hrs	3-Min to 24-Hrs
A. 0.17	0.498	0.350
B. 0.35	0.231	0.115
Ratios of A/B Conversions	2.08	3.04

Consequently, the time average overpredicts by a factor of two to three.

Page 29

Table 10 - Time Averaged Maximum Ground-Level Concentrations by Compound

The information given in this table can be used to illustrate the errors which arise when the distance to the property line is not considered. The talc source at elevation 11.6 meters is shown to produce a maximum ground-level concentration of 200 $\mu gm/m^3$. We estimate the maximum concentration falls about 600 ft downwind (at D stability). However, at the property line ($\sim$3,000 ft downwind for one of our plants), the value is lower by a factor of seven.

Similarly chloroprene concentrations are lower by a factor of five, and dichlorobutene by a factor of 20 when property line concentrations are compared to the predicted maxima. Consequently, source severities based on maxima concentrations of small sources close to ground may not be a meaningful measure of the effect of a source off a plant site.

Maximum ground-level concentrations predicted in Table 10 are also in error for the chloroprene process because they assume all sources are emitting simultaneously and continuously. With the exception of the chloroprene isolation system (strippers, wash belts, driers), this is not the case. The remainder of the chloroprene process is batchwise, with vessels venting in sequence rather than together. Consequently, the effect of emissions from this part of the process is overestimated by a factor of two or more.

Page 29

Equation (6)

This equation is the basis for a reasonable source severity determination, however, the Threshold Limit Value correction (F) for noncriteria pollutants is overly conservative and not consistent with Ambient Air Quality Standards.

For example, SO_2, has both a TLV and an ambient air quality standard. Using the TLV of SO_2 as 5 ppm (13 mg/m^3), the "F" value becomes $5 \times 8/24 \times 10^{-2} = 0.017$; if $\bar{x}$ max (24 hr) = 0.034 ppm (0.089 mg/m^3), the S (source severity) = 0.034/0.017 = 2. It is stated that if $\bar{x}$ max/F >1.0, "the source is considered a definite candidate for control technology development" and that if this ratio is >0.1, it "indicates a possible need for additional control technology." These quotes are from the Monsanto Research Corporation document on Source Assessment Methodology. The above would say that SO_2 definitely needs control although its 24-hr maximum concentration is about 25% of the federal ambient air quality standard, and "it might possibly need control" if its 24-hr concentration were greater than 0.0034 ppm. This latter value which is about 2.5% of the air quality standard as we understand it would be used in evaluating the affected population. In this case, it probably means the entire U.S. would be affected because 0.0034 ppm is likely the absolute minimum background. We conclude 0.005 ppm represents the minimum measurable detection level.

In the table below, we have substituted the TLV's of criteria pollutant in the F formula, using the time period applicable for each pollutant's Primary Ambient Air Standard. The F factor is then compared against the Primary Standard.

Error in F Factor as Approximation of Primary Ambient Air Standard

Criteria Pollutant	TLV_3 mg/m^3	Amb. Air Std. Time Period T (Hours)	$F^* = \frac{(TLV)(8)}{(T)(100)}$	Amb. Std. (mg/m^3)	R = Amb. Std. / F
SO_2	13	24	0.04	0.365	9.1
$NO_x(NO_2)$		8,760	0.00008	0.10	1,250
Oxidants (Ozone)	0.2	1	0.015	0.160	10.6
CO	55	8	0.55	10	18.1

*The time period (T) for which the ambient standard applies was substituted for 24 in the Monsanto equation, which is the less general case where only the 24-hr standard is used.

As shown by the ratio, R, this approach can lead to significant errors which give highly misleading and unrealistic results.

Page 34

Affected Population

We question the basis of determining the population exposed to high concentrations by the area included in an isopleth of $\chi/F > 0.1$. It should be the area where $\chi/F > 1.0$, since this would be the situation where the primary standard is being exceeded (if F is the primary standard). This would reduce the affected area (and population) by a factor of about 10 for a ground source, according to Turner.[3] We believe that the error would be much greater still for an elevated source.

References for Appendix D

1. Turner, D. Bruce, "Workbook of Atmospheric Dispersion Estimates," U.S. Department Health, Education, and Welfare, 1969, pp. 8-9. (σ's taken at 1 km which is probable greatest distance of maxima.)

2. Smith, Maynard, "Recommended Guide for the Prediction of the Dispersion of Airbourne Effluents, ASME, p. 51.

3. Turner, p. 28.

GLOSSARY

affected population: Number of nonplant persons exposed to concentrations of airborne materials which are present in concentrations greater than a determined hazard potential factor.

brine: Solution of sodium chloride or potassium chloride; used as a heat exchange fluid in cooling systems designed to remove heat produced during polymerization of monomer.

butadiene: C_4 unsaturated hydrocarbon produced by the catalytic dehydrogenation of butylenes or butane and used as a feedstock in the production of chloroprene.

criteria pollutant: Emission species for which ambient air quality standards have been established. These include particulates, carbon monoxide, sulfur oxides, nitrogen oxides, and nonmethane hydrocarbons.

emission factor: Weight of material emitted to the atmosphere per unit of neoprene produced; e.g., g material/kg product.

emulsion polymerization: Conversion of chloroprene to neoprene by a heterogeneous reaction system with a continuous aqueous phase and a dispersed monomer phase.

nitrogen blanket: Layer of nitrogen gas under pressure which relies on the surface of stored volatile organics; designed to control hydrocarbon emissions from storage tanks.

noncriteria pollutant: Emission species for which no ambeint air quality standards have been established.

polychloroprene (neoprene): Synthetic rubber produced through the polymerization of chloroprene.

source severity: Ratio of the maximum mean ground level concentration of emitted species to the hazard factor for the species.

stability class: Factor which characterizes the atmosphere and is determined from cloud cover, wind speed, and time of day.

TECHNICAL REPORT DATA
(Please read Instructions on the reverse before completing)

1. REPORT NO. EPA-600/2-77-107o	2.	3. RECIPIENT'S ACCESSION NO.
4. TITLE AND SUBTITLE SOURCE ASSESSMENT: POLYCHLOROPRENE, State of the Art		5. REPORT DATE December 1977 issuing date
		6. PERFORMING ORGANIZATION CODE
7. AUTHOR(S) D. A. Horn, D. R. Tierney, and T. W. Hughes		8. PERFORMING ORGANIZATION REPORT NO. MRC-DA-718
9. PERFORMING ORGANIZATION NAME AND ADDRESS Monsanto Research Corporation 1515 Nicholas Road Dayton, Ohio 45407		10. PROGRAM ELEMENT NO. 1AB604
		11. CONTRACT/GRANT NO 68-02-1874
12. SPONSORING AGENCY NAME AND ADDRESS Industrial Environmental Research Lab. - Cin., Oh 45268 Office of Ressearch & Development U.S. Environmental Protection Agency Cincinnati, Ohio 45268		13. TYPE OF REPORT AND PERIOD COVERED Task Final 3/75-7/77
		14. SPONSORING AGENCY CODE EPA/600/12

15. SUPPLEMENTARY NOTES
IERL-Ci project leader for this report is R. J. Turner, 513-684-4481

16. ABSTRACT

This document reviews the state of the art of air emissions from polychloroprene manufacture. The composition, quality, and rate of emissions, and their environmental effects are described. Polychloroprene is produced by the emulsion polymerization of 2-chloro-1,3-butadiene (chloroprene). Emissions include hydrocarbons, particulate, hydrogen chloride, and nitrogen oxides. To assess the severity of emissions from this industry, a representative plant was defined based on mean values for plant parameters. Source severity was defined as the ratio of the time-averaged maximum ground level concentration of an emission to the primary AAQS for criteria pollutants or to a reduced TLV for noncriteria pollutants. For a representative plant, source severities for particulate, hydrocarbons, nitorgen oxides, chloroprene, toluene, hydrogen chloride, and talc are 0.03, 23, 0.1, 4.3, 0.4, 0.9, and 3.4, respectively. Hydrocarbon emissions are controlled through a combination of process modifications. Particulates are controlled by exhaust systems in conjunction with wet scrubbers or fabric filters. Hydrogen chloride emissions are reduced by falling film absorbers and packed scrubbers.

17. KEY WORDS AND DOCUMENT ANALYSIS

a. DESCRIPTORS	b. IDENTIFIERS/OPEN ENDED TERMS	c. COSATI Field/Group
Air Pollution Assessments Polychloroprene Chloroprene resins	Air Pollution Control Source Assessment Neoprene	68 E 68F

18. DISTRIBUTION STATEMENT Release to Public	19. SECURITY CLASS (This Report) Unclassified	21. NO. OF PAGES 95
	20. SECURITY CLASS (This page) Unclassified	22. PRICE

EPA Form 2220-1 (9-73)

☆ U.S. GOVERNMENT PRINTING OFFICE 1978— 757-140/6654