EPA-650/2-74-052

STUDY OF POTENTIAL PROBLEMS AND OPTIMUM OPPORTUNITIES IN RETROFITTING INDUSTRIAL PROCESSES TO LOW AND INTERMEDIATE ENERGY GAS FROM COAL

by

D. Ball, G. Smithson,
R. Engdahl, and A. Putnam

Battelle--Columbus Laboratories
505 King Avenue
Columbus, Ohio 43201

Contract No. 68-02-1323
Task 1
ROAP No. 21ADD-30
Program Element No. 1AB013

EPA Project Officer: William J. Rhodes

Control Systems Laboratory
National Environmental Research Center
Research Triangle Park, North Carolina 27711

Prepared for

OFFICE OF RESEARCH AND DEVELOPMENT
U.S. ENVIRONMENTAL PROTECTION AGENCY
WASHINGTON, D.C. 20460

May 1974

This report has been reviewed by the Environmental Protection Agency and approved for publication. Approval does not signify that the contents necessarily reflect the views and policies of the Agency, nor does mention of trade names or commercial products constitute endorsement or recommendation for use.

TABLE OF CONTENTS

	Page
SUMMARY	vii
CONCLUSIONS	x
RECOMMENDED AREAS FOR CONSIDERATION	xii
LIST OF ABBREVIATIONS	xiii
LIST OF CONVERSION FACTORS	xiv
INTRODUCTION	1
OBJECTIVE	2
I. GASIFICATION AND GASIFICATION SYSTEMS	3
I-1. Current Commercial Gasification Processes	3
Lurgi	3
Koppers-Totzek	7
Winkler	9
Wellman-Galusha	11
I-2. Fuel Gas Characteristics	14
I-3. Comparison of Commercial Gasification Processes	17
Thermal Efficiency	17
Steam-Raising Capacity	17
Fuel Requirements	20
Unit Capacities	21
Operational	21
II. FUEL GAS CLEANUP	22
III. CONSIDERATIONS IN UTILIZING LOW AND INTERMEDIATE-ENERGY GAS FROM COAL IN INDUSTRY	26
III-1. Comparison of Characteristics of Low and Intermediate Gas to Natural Gas	26
III-2. Environmental Considerations	30
IV. UTILIZATION OF LOW AND INTERMEDIATE ENERGY GAS IN INDUSTRY	36
IV-1. Criteria Used for Evaluating Ease of Retrofit of Industrial Processes	36
IV-2. Classification of Common Industrial Processes According to Their Ease of Retrofit	38

TABLE OF CONTENTS
(Continued)

Page

IV-3. Utilization of Gas From Coal in Industrial Boilers 40

IV-4. Retrofit of Gas Turbines to Low- or Intermediate-Energy Gas From Coal 43

V. ANALYSIS OF POTENTIAL MAJOR INDUSTRIAL USERS OF LOW AND INTERMEDIATE ENERGY GAS FROM COAL 45

V-1. Chemical and Allied Products Industry (SIC 28). . . 45

V-2. Primary Metals (SIC 33) 48

Basic Iron and Steel. 48
Ferrous Foundries (SIC 332) 52
Primary Nonferrous Metals (SIC 333) 54

V-3. Petroleum and Coal Products Industry (SIC 29) . . . 60

V-4. Stone Clay and Glass Products (SIC 32). 65

Glass 66
Cement. 67
Lime. 70
Ceramics. 71

VI. UTILIZATION OF LOW OR INTERMEDIATE ENERGY GAS FROM COAL IN ELECTRIC POWER GENERATION 73

VII. REFERENCES. 78

APPENDIX A

INTERCHANGEABILITY OF FUELS WITH RESPECT TO THE COMBUSTION PROCESS A-1

SUMMARY A-1

CONCLUSIONS A-2

LIST OF SYMBOLS A-3

INTRODUCTION. A-4

Presentation of Data A-5

Discussion of the Data A-12

Premix Burners. A-12

Delayed Mixing Burners. A-17

Nozzle Mix Burners. A-22

References A-25

TABLE OF CONTENTS
(Continued)

Page

APPENDIX B

FUEL GAS CLEANUP PROCESSES B-1

Sulfur Removal B-1

Waste or By-Product Recovery of Sulfur B-11

Particulates Control B-12

Nitrogen Oxides B-13

References B-14

APPENDIX C

DETERMINATION OF RELATIONSHIPS FOR SULFUR EMISSIONS GIVEN IN FIGURES B-1 THROUGH B-4 . . . . . C-1

APPENDIX D

CALCULATION OF RELATIVE GAS PRESSURE DROP D-1

LIST OF TABLES

Table 1. Typical Gas Compositions for Commercial Gasifiers . 15

Table 2. Typical Concentrations of Nonhydrocarbon Impurities in Coal Gas 16

Table 3. Typical Unit Characteristics for Commercial Gasifiers 18

Table 4. Steam and Oxygen Requirements for Oxygen Blown Gasifiers 19

Table 5. Comparison of Volumes of Fuel Gas to Natural Gas . . 27

Table 6. Energy Consumption in Chemical and Allied Products Industry 46

Table 7. Energy Use in Basic Iron and Steel in 1971 51

Table 8. Melting Furnaces in the Ferrous Foundry Industry in 1965 53

Table 9. Energy Use in the Ferrous Foundry Industry (1964) . 53

Table 10. Energy Requirements of the Primary Nonferrous Metals Industry (1971) 55

Table 11. Process Energy Requirements for Copper Manufacture in 1971 56

Table 12. Process Energy Requirements for Lead Manufacture in 1971 58

LIST OF TABLES
(Continued)

		Page
Table 13.	Process Energy Requirements in Zinc Manufacture in 1971.	59
Table 14.	Process Energy Requirements in Aluminum Manufacture in 1971.	61
Table 15.	Energy Usage in the Petroleum and Coal Products Industry	61
Table 16.	Energy Requirements of Various Petroleum Refining Processes per Barrel of Feed	65
Table 17.	Energy Requirements in the Stone, Clay, and Glass Products Industry (1971)	66
Table 18.	Process Energy Requirements in Glass Manufacture in 1971.	68
Table A-1.	Fuel Consumption and Thermal Properties.	A-6
Table A-2.	Fuel Stability Factors	A-7
Table B-1.	Conventional Processes for Fuel Gas Desulfurization	B-7

LIST OF FIGURES

Figure 1.	Lurgi Gasifier	4
Figure 2.	Koppers-Totzek Gasifier.	8
Figure 3.	Winkler Gasifier	10
Figure 4.	Wellman-Galusha Gasifier	12
Figure 5.	Typical Gasification Scheme With Cold Gas Cleanup .	31
Figure A-1.	Flash Back Velocity Gradient Versus Mixture Ratio.	A-9
Figure A-2.	Critical Heat Supply Rate Per Unit Volume Versus Mixture Ratio.	A-10
Figure A-3.	Flash Back Velocity Gradient Times High Heating Value Versus Mixture Ratio	A-11
Figure A-4.	Premix Burner.	A-13
Figure A-5.	Delayed Mixing Burners	A-19
Figure A-6.	Nozzle Mixing.	A-21
Figure B-1.	SO_2 Emission Versus Percent Sulfur in Coal for Different Gasification Efficiencies.	B-2
Figure B-2.	Sulfur Removal Required to Meet Standard Versus Percent Sulfur in Coal	B-3
Figure B-3.	H_2S in Fuel Gas Versus Percent Sulfur in Coal for Different Gas High Heating Values.	B-4
Figure B-4.	SO_2 Emissions Versus H_2S Concentration in Fuel Gas for Different Gas High Heating Values.	B-5

SUMMARY

This study involved an analysis of the state-of-the-art of commercial coal gasification processes and fuel gas cleanup processes applicable to coal gasification. The study also included an analysis of the potential problems in retrofitting existing industrial processes to the use of low or intermediate energy gas from coal.

It was found that presently there are four gasification processes: Lurgi, Koppers Totzek, Wellman-Galusha, and Winkler that have been commercially proven for gasifying coal and for which there exists a current manufacturing capability. It is doubtful, however, that any of these four processes could be produced in significant numbers for industrial application at the present time due to limited manufacturing capacity.

Only one of the four processes, the Wellman-Galusha, has been used commercially in this country for making low energy gas, and presently there are only a few known cases in which these gasifiers are still used either for standby service or as a primary source of fuel. The other three processes are manufactured in Germany, and though they have had little or no application in this country, they have been used extensively in other parts of the world for producing town gas (intermediate energy fuel gas) or synthesis gas for production of ammonia and higher hydrocarbon fuels. These processes are presently receiving considerable attention in this country, however, for both the production of synthesis gas to make synthetic natural gas (SNG) and as a direct source of fuel gas.

It was also found that commercial processes have been developed for reducing particulate and sulfur levels in the fuel gas well below those concentrations that would be considered environmentally acceptable for a coal-based fuel. At the present time, however, no cleanup processes are available for cleaning the fuel gas at temperatures above 1000 F, and thus, increasing the overall thermal efficiency of the process through utilization of the sensible heat in the gas; but a hot gas cleanup ability is not felt to be critical to make low or intermediate energy from coal attractive for industrial use. Much of the sensible heat in the gas can be recovered in a wasteheat boiler while cooling the gas for cleanup, and the steam generated can be used in the gasification process itself

or for other processes in the industrial plant. Also, distribution of a cold gas to various processes in a given industry would be easier than distribution of a hot gas.

An analysis of potential problem areas in retrofitting existing industrial processes revealed the following:

- From a combustion standpoint, designing or modifying burners to allow the substitution of low or intermediate energy gas for oil or natural gas will probably not be a serious problem, though at the present time, the wide variety of "off-the-shelf" burners used in industrial processes are not available for lower energy gases; development of such burner lines, in many cases, may require 1 to 2 years of work. It is felt, however, that the development of adequate burners would be easier for intermediate energy gas of around 300 Btu/scf (2664 kcal/m^3) from oxygen-blown gasifiers than for low energy gas of around 150 Btu/scf (1332 kcal/m^3) from air-blown gasifiers.
- The major problems are expected to lie in handling the increased volumes of fuel gas and combustion products necessary to obtain comparable energy input to that supplied by oil or natural gas. For low or intermediate energy gas, larger fuel distribution mains and burner nozzles will be required over those for natural gas. The higher volume of combustion products will require induced or forced draft fans to operate at higher pressures than with oil or natural gas. Substitution of low or intermediate energy gas from coal in existing direct coal-fired processes should not present serious problems in this area, since processes designed for coal usually have more generous gas-flow passages to allow for ash buildup and, also, less excess air should be necessary in switching to a gaseous fuel, resulting in less of a difference in the volumes of the products of combustion.

- The amount of air pollution in the form of SO_2 and particulates generated by utilizing low or intermediate energy gas from coal will depend heavily on the cleanup processes. With existing commercial cold gas cleanup processes, however, it should be possible to reduce SO_2 emissions well below the environmental standard for coal-or oil-fired processes. Also, particulate levels should be reduced to near zero when the common cleanup combination of particulate removal followed by wet scrubbing for H_2S is used. NO_x emissions will depend a great deal on the combustion process, though they should in general be less than or, at most, equal to those from two-stage coal combustion.
- Solid and liquid waste from the gasification and gas cleanup process represent a potential environmental problem area. The recovery of elemental sulfur represents a potentially marketable product, though due to the large amount of sulfur that would be generated there is good reason to believe it would probably represent a waste to be disposed of. Also, nearly all the current processes involve wet scrubbing with a variety of sorbents, resulting in liquid waste streams that would necessitate cleanup prior to disposal.

Based on their general characteristics, a wide variety of industrial processes were found to be potentially attractive for retrofit to low or intermediate energy gas from coal. Criteria were set up for evaluating these process characteristics and their effect on ease of retrofit. Various processes were then classed in three groups: those easiest to retrofit and requiring minimal testing and modification; those in which retrofit is an attractive alternative but where modification or extensive testing would be necessary; and those processes in which retrofit is unattractive. An analysis was made of the four major energy-consuming industrial sectors (according to the latest U.S. Census of Manufacturers) to determine the potential for use of low or intermediate energy gas from coal and to estimate the potential amount of energy substitution possible.

CONCLUSIONS

The conclusions from this background study into the potential for utilization of low or intermediate energy gas from coal in industrial processes are as follows:

- Commercial gasification and gas cleanup systems currently exist for the gasification of coal to an environmentally acceptable gaseous fuel for industrial process use.
- Obtaining suitable combustion of the lower energy gases from coal in processes designed for higher energy fuels (such as oil and natural gas) should not be a serious problem, though a full range of "off the shelf" replacement burners presently do not exist for the wide range of process requirements that exist, and development of such a line may require from 1 to 2 years.
- The major problems in retrofit will involve the handling of the increased volumes of fuel gas and products of combustion resulting when low or intermediate energy gas from coal is used to supply the same heat input as oil or natural gas.
- Emissions of sulfur dioxide and particulates should be controllable with existing cleanup processes within the current environmental requirements for oil- and coal-fired processes and should in both cases be much less. Emissions of other potential pollutants must be assessed as systems are utilized.
- Liquid and solid waste generation from gasification could be a problem in comparison with use of clean fuels such as oil and natural gas, but this generation of waste may be less of a problem than that from the alternative of tail gas cleaning of flue gases following the combustion of dirty fuels (such as high-sulfur oil or coal).
- There is a wide range of industrial processes representing a significant portion of energy use in industry that should be applicable to retrofit to low or intermediate energy gas from coal, providing that suitable burners and gasification equipment are available.

3. Though not all processes require a pressurized fuel gas, pressurized gasification is attractive in that it allows greater gas production with smaller equipment and requires the least energy in compression to provide a pressurized gas for distribution or use in gas turbines. Currently, the Lurgi is the only commercial process capable of pressurized gasification, and it uses a complex system of lock hoppers requiring frequent maintenance and downtime for coal feeding and ash removal. The developing of a less complex pressurized gasification process capable of gasifying a wide variety of coals would be highly attractive for industrial use.

4. Another area for consideration in industrial use of coal gasification as a fuel source is gas cleanup. Almost all the processes in Table 5 involve liquid scrubbing. The two dry processes, iron sponge and activated carbon, are mostly applicable where extremely low concentrations of sulfur are demanded and where the initial sulfur concentration is relatively low. With high inlet sulfur concentrations, both processes require frequent sorbent replacement. For industrial use, a cleanup system capable of reducing relatively high H_2S concentrations in the gas to moderate concentrations that are environmentally acceptable with a minimum of expense and waste would be attractive. It is also desirable that the cleanup system be specific for H_2S, as removal of other constituents such as CO_2 requires unnecessary extra cleanup capacity and complicates sulfur recovery. For many industrial applications, an unclean gas is not considered especially valuable. If the steam generated by a waste heat boiler in cooling the hot raw gas to a temperature suitable for current cold gas cleanup processes can be utilized, then much of the sensible heat in the gas can be conserved. The resulting difference in thermal efficiency between the process with a hot clean gas and a cold clean gas is therefore less than would result if the sensible heat were not conserved and the greater ease and economy with which the cold gas can be handled and distributed may make it more attractive in some cases.

5. In addition to product gas cleanup, there are emission and effluent streams that require characterization in order that environmental assessments may be made of their control adequacy.

RECOMMENDED AREAS FOR CONSIDERATION

1. Though it was concluded from the study presented in Appendix A and from discussions with burner manufacturers that development of adequate burners for low or intermediate energy gas from coal would probably not pose serious technical problems, these burners, in general, are not currently available for the wide range of process requirements. Burners that used to be used for low energy gas from coal and burners used in some industries today for low energy waste gases may not in many cases have the required characteristics of flame stability and safety demanded in many processes. Prior to any significant application of coal gasification in industry, a wide selection of burner types and performance will have to be available from the manufacturer. Development of new burner lines requires considerable time and may require 1 to 2 years of design and testing before their becoming available as catalog items.

2. In conjunction with Item 1, there presently are very little data available on the burning characteristics of various gas compositions obtained in coal gasification. It would be useful in designing burners to have accurate data on some of the basic combustion parameters (such as flame velocity and temperature) for different gas mixtures. Other useful areas of knowledge that may not evolve from normal burner development programs are data on emissions of NO_x and noise. An independent study determining these various characteristics of typical gas mixtures produced in coal gasification should prove useful in burner design and in estimating some of the potential environmental effects of burning low or intermediate energy gas from coal. It would also provide a sounder basis for optimal matching of gasification systems and processes, especially relating to the tradeoffs of using more expensive 300 Btu/scf gas from oxygen-blown producers versus cheaper 150 Btu/scf gas from air-blown producers.

LIST OF ABBREVIATIONS

scf - Standard cubic foot as measured at 60 F and 30 inches of mercury (American Gas Association standard temperature and pressure)

psia - Pounds pressure per square inch absolute

psig - Pounds pressure per square inch gage

Kcal - Kilocalorie

Kg - Kilogram

lb - Pound mass

Btu - British Thermal Unit

m - Meter

mm - Millimeter

C - Degrees centigrade

F - Degrees Fahrenheit

N - Newton

ppm - Parts per million by volume

HHV - High heating value of fuel including the latent heat of vaporization of water formed during combustion

Ng - Gasification efficiency. Energy content of product gas divided by energy content of coal

LIST OF CONVERSION FACTORS

Btu (@ 60 F) x 0.252 = Kcal

ft x 0.3048 = m

in. x 25.4 = mm

F subtract 32 x 0.555 = C

lb x 0.453 = Kg

lb x 0.453 = Kg

scf (@ 60 F & 30 in. Hg) x 0.0284 = m^3 (@ 15.5 C & 762 mm Hg)

Btu/scf x 8.88 = Kcal/m^3 (@ 15.5 C & 762 mm Hg)

lb/10^6 Btu x 1.798 = Kg/10^6 Kcal

ton x 1.104 = metric ton

INTRODUCTION AND OBJECTIVE

STUDY OF POTENTIAL PROBLEMS AND OPTIONAL OPPORTUNITIES IN RETROFITTING INDUSTRIAL PROCESSES TO LOW AND INTERMEDIATE ENERGY GAS FROM COAL

by

D. A. Ball, G. R. Smithson, R. B. Engdahl, and A. A. Putnam

INTRODUCTION

In recent years the United States has become increasingly dependent on oil and natural gas as a source of clean, convenient energy. According to the 1972 Census of Manufacturers[1], natural gas supplied 59 percent of the energy needs of American industry in 1971 and oil contributed an additional 11 percent. Many segments of industry have become dependent on a source of clean, convenient gaseous or liquid fuel, and with the growing scarcity and higher costs of natural gas and oil, low and intermediate energy gas from coal may be a viable alternative.

The use of low energy gas from coal (or producer gas as it is sometimes called) was once widespread in industry; in fact, it was the first gaseous fuel used in the iron and steel industry for firing open-hearth furnaces between 1860 and 1920[2], when by-product coke oven gas displaced it. In 1920 there were reportedly over 11,000 gas producers supplying gaseous fuel for a wide variety of industries from brick plants to bakeries. With the advent of inexpensive natural gas and oil, however, the incentive for gasifying coal decreased until today there are but a few bituminous coal gas producers in this country and these have largely been placed in standby positions.

This study is a general analysis of the potential problem areas in retrofitting existing industrial processes to the use of low or intermediate energy gas from coal. Also included is an analysis of the current state of the art of commercial coal gasification systems and gas cleanup systems applicable to industrial use.

OBJECTIVE

The objectives of this study are to analyze and provide background information on the status of current commercial coal gasification and pertinent gas cleanup technology and to evaluate the potential for utilization of low or intermediate energy gas from coal in existing industrial processes, specifically evaluating the expected problems in retrofit.

SECTION I

GASIFICATION AND GASIFICATION SYSTEMS

GASIFICATION AND GASIFICATION SYSTEMS

Low-energy gas from coal, often called producer gas, is made by supplying a sufficient mixture of air and steam to coal for partial combustion resulting in a gas rich in CO, H_2, and possibly some hydrocarbons giving the gas its characteristic heating value. The air-steam mixture generally yields a gas with about 50 percent nitrogen content and a heating value of around 100 to 200 Btu/scf (888 to 1780 kcal/m^3). In most gasification processes oxygen can be substituted for air, yielding a gas essentially free of nitrogen with a heating value of around 300 Btu/scf (2670 kcal/m^3). Oxygen-blown gasifiers are frequently used in other parts of the world for the production of town gas, which is used in much the same way that natural gas is used in this country. This gas is also frequently used for synthesis gas in the production of higher hydrocarbon products, and ammonia.

I-1. Current Commercial Gasification Processes

Presently, there are four gasification systems that can be considered commercially viable in the sense that they have been proven commercially for the gasification of coal and are available today through commercial dealers. These four systems are the

(1) Lurgi
(2) Koppers Totzek
(3) Wellman-Galusha
(4) Winkler.

None of these processes are in widespread use in the United States at the present time due to the past abundance of cheap natural gas and oil, fuels which today are becoming increasingly scarce.

Lurgi

The Lurgi gasifier, shown schematically in Figure 1, was first developed on lignite in 1931 by Lurgi Gesellschaft fur Warme und Chemetechnik mbH, Frankfurt, West Germany.[3] Lurgi gasifiers have been widely used in other parts of the

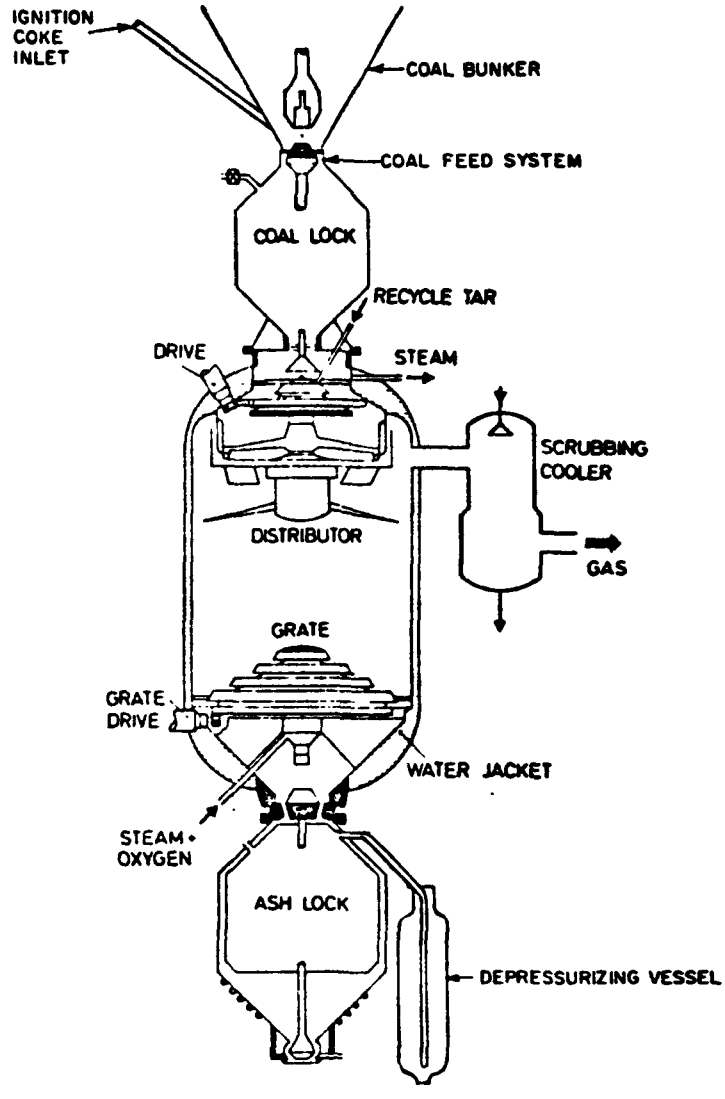

Lurgi (Lurgi Gesellschaft fur Warme und Chemotechnik mbH)

Characteristics:

- Pressurized process (300 to 500 psig) (2070 to 3450 N/m^2)
- Fixed bed operation with rotating grate and coal-feed distributor, countercurrent gas flow
- Coal feed and ash removal through lock hoppers
- Typical gasifier outlet temperature 900-1100 F (480 to 590 C)
- Uses double screened non-caking or possibly mildly caking coal (3-30 mm) (1/8 to 1-1/4 in.)

FIGURE 1. LURGI GASIFIER[6]

world, primarily utilizing an oxygen-steam gasifying medium for the production of town gas and synthesis gas for hydrocarbon products; the most notable application is the largest coal gasification plant in the world at Sasolburg, South Africa.[4] Lurgi gasifiers also have used air-steam gasifying mediums to produce a low-Btu gas of around 180 Btu/scf (1600 kcal/m^3). Currently, Lurgi is beginning to operate a demonstration-scale gas-turbine power plant in Lunen, Germany with a battery of air-blown gasifiers.[5]

The Lurgi gasifier utilizes a fixed-bed pressurized process with the gasifier operating under approximately 20 atmospheres of pressure. Pressurization requires coal feed and ash removal to be handled by lock hoppers at the top and bottom of the unit. The lock hoppers allow coal and ash to be processed in and out of the unit intermittently without interrupting the process. The gasifying medium is introduced under pressure through a rotating grate in the bottom of the unit and flows countercurrently through the coal bed, forming the fuel gas which is taken off at the top of the unit. The rotating grate also allows ash to fall into the bottom lock hopper for removal and serves to prevent agglomeration of the coal to insure an evenly distributed flow of the gasifying medium through the bed. At the top of the gasifier is a rotating horizontal arm that distributes the coal from the feed hopper evenly over the surface of the bed. The gasifier body itself consists of a water-cooled double-shelled cylinder with the water flowing in the jacket formed by the annulus of the two shells. Steam formed by the heat absorbed in the cooling water is capable of supplying approximately 20 percent of the process steam requirements of the unit.[6] The overall thermal efficiency of the process including the sensible heat in the hot fuel gas is 91 percent.

As is typical of fixed-bed processes, the Lurgi process is sensitive to caking coals. The process was developed with lignite as a fuel and in nearly all commercial installations has been restricted to lignite or other weakly caking fuels such as anthracite and sub-bituminous coals. Lurgi claims to be capable of specifically designing a gasifier to gasify caking coals typical of the Eastern United States and is currently conducting trials at a town gas plant in Westfield, Scotland, on a variety of American coals.[7] The trials are still in progress and, according to the most recent information, the highest caking coal gasified was an Illinois No. 6, a milding caking coal. Trials were conducted in 1963 at Dorsten, West Germany, with highly caking Pittsburgh bed coal on a Lurgi gasifier with a specially designed water-cooled

rotating agitator arm just below the surface of the coal bed. Those tests were inconclusive, however, as the longest run was only 12 hours. The relatively short tests were due to the small amount of coal sample available, and the coal ash had to be increased from 7 percent to 30 percent by the addition of ash from the noncaking coal normally gasified at the site. To date, Lurgi has not published information demonstrating conclusively the ability of its process to gasify highly caking coal.

In addition to the coal caking properties, operation of the Lurgi process also is sensitive to coal size. Normally, the coal is crushed and double screened to sizes from roughly 1/8 inch (3 mm) to 1-1/4 inch (30 mm).[6] Some small amount of undersize (around 7 percent) can be tolerated, though the presence of fines tends to disrupt the gasification process.

Due to the large number of moving parts and pressurized operation, the Lurgi process is mechanically more complex than the other three gasifiers considered. Seals and packing glands around the lock hoppers and rotating shafts extending through the gasifier shell require a sophisticated maintenance program to insure proper gasifier operation. The Lurgi reactor also has a relatively large number of operating variables. Both the grate and coal distributor arm rotational speed, as well as the coal feed rate, ash removal rate, and air-steam or oxygen-steam ratio can be varied to adjust to changing demands on the gasifier. While this may make the gasifier more flexible in some situations, it also makes it more difficult to operate, requiring highly trained personnel.

The size of fixed-bed gasifiers is somewhat limited by the ability to make large rotating parts that will function effectively inside the gasifier. Lurgi presently is capable of making gasifiers 12 feet (3.68 m) in diameter, but is planning to produce a unit 16 feet (4.88 m) in diameter.[5] Approximately 7 to 9 billion Btu per day* (1.7 to 2.3 billion kcal per day) can be produced in the 12-foot unit. In the 16-foot unit, 12 to 16 billion Btu's per day (3 to 4 billion kcal per day) can be produced. The Lurgi gasifier can operate satisfactorily down to 50 percent of its design load.[6]

---

* Based on a gasification rate of 300 lb coal/hr ft^2 (cross section)[5] (1455 kg coal/hr-m^2).

Koppers-Totzek

The Koppers-Totzek process shown in Figure 2, utilizes pulverized coal in suspension with oxygen and steam to produce an intermediate energy gas of around 300 Btu/scf (2660 kcal/m^3). The gasifier was first commercially operated in Finland in 1952[8] by H. Koppers Company of Essen, West Germany. Currently, there are 16 commercial plants that have been built or are under construction around the world primarily for the production of a synthesis gas for ammonia manufacture.

The design of the gasifier is relatively simple, and it operates at nearly atmospheric pressure. Either two or four burners diametrically opposed on the circumference of the gasifier fire a mixture of oxygen, steam, and pulverized coal into the center of the gasifier, where the coal is gasified under slagging conditions at around 3300 F (1850 C). About 50 percent of the ash is carried away in the gas stream and the remainder drops out as slag into a water bath at the bottom of the unit. Koppers has conducted tests firing the gasifier with air instead of oxygen and found that the air had to be preheated to at least 1800 F (982 C) to maintain slagging conditions. Oxygen-enriched air can be successfully used in the gasifier with a minimum of 32 percent oxygen. In subsequent studies, Koppers has concluded that firing with oxygen instead of air is economically attractive in spite of the necessity of an oxygen plant, especially for larger units. This is due to the reduced size necessary for the gasifier, waste heat boiler, and gas cleanup equipment.

The Koppers-Totzek gasifier is the only one of the four discussed here that is not sensitive to the caking properties of the coal. The coal is pulverized, with 90 percent passing a 200-mesh screen, fed to the gasifier, and then gasified in suspension. The coal is normally dried to less than 1 percent moisture to facilitate pulverizing, though up to 8 percent moisture could be tolerated.

The fuel gas leaves the gasifier at about 2700 F (1480 C) and is passed through waste heat boilers prior to cleanup. Due to the high temperature of the gas, it contains significant sensible heat--up to 20 percent of the original heating value of the coal.[9] Recovery of some of this heat in a waste heat boiler makes the gasifier a net exporter of steam, and it is capable

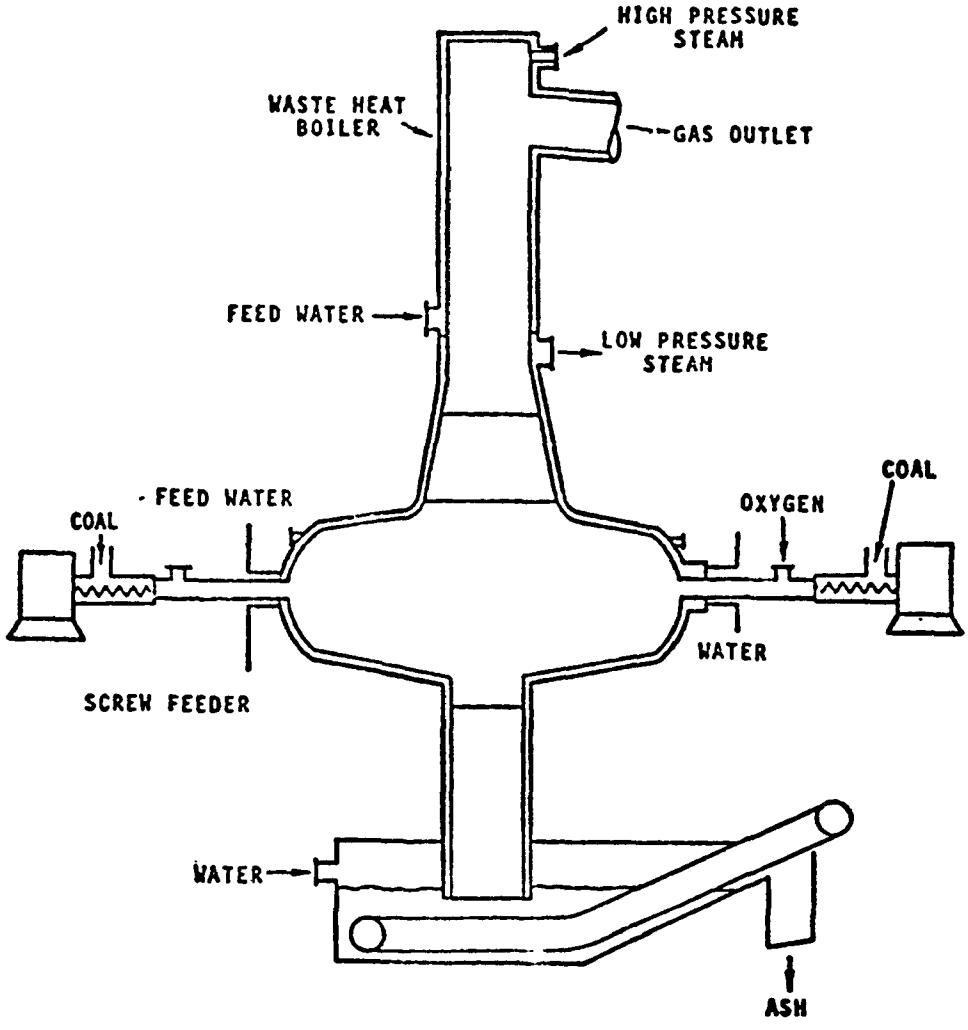

Koppers Totzek (Koppers Company, Pittsburgh, Pennsylvania)

Characteristics:

- -Atmospheric pressure process
- -Pulverized tangentially fired coal feed
- -Typical gasifier outlet temperature 2000-2700 F (100 to 1500 C)
- -Can use caking of non-caking coal
- -90 percent past a 200 mess sieve

FIGURE 2. KOPPERS TOTZEK GASIFIER[6]

of producing roughly 150 pounds of high-pressure steam[8] per million Btu (270 kg/million kcal) of fuel gas produced. The overall thermal efficiency of the Koppers process including the sensible heat in the hot fuel gas is 86 percent.

Due to the uncomplicated mechanical design of the gasifier, operation is relatively simple and maintenance minimal. Commercial installations have demonstrated the capability of being on line 95 percent of the time. Also, shutdown can be accomplished instantaneously and the unit can achieve full gas production within 30 minutes from a standby condition, with the refractory lining heated by gas or oil torches.

Currently, Koppers makes both two-burner and four-burner units. The two-burner unit is capable of gasifying up to 400 tons per day (352 metric tons/day) of coal--equivalent to about 7 to 9 billion Btu per day (1.7 to 2.3 billion kcal/day) of hot gas--and the four-burner unit is capable of gasifying up to 850 tons per day (780 metric tons/day) of coal--equivalent to 14 to 18 billion Btu per day (3.5 to 4.5 billion kcal/day). Koppers claim[10] that any two opposing burners can be reduced in load 35 percent. In addition, on the four-burner unit two burners can be completely shut off for a total load reducing capability of up to 65 percent.

Winkler

The Winkler gasifier, shown in Figure 3, is an atmospheric-pressure fluidized-bed process first used commercially in Germany in 1926 for the production of fuel gas. Since then, 16 gasification plants, totaling 36 gasifiers, have been designed and built by Bamag Verfahrenstechnik GmbH, a German affiliate of Davy Power Gas, Inc.

The Winkler process can be fired with either oxygen and steam--making an intermediate energy gas of about 300 Btu/scf (2670 kcal/m^3)--or with air and steam--making a low energy gas of about 120 Btu/scf (1060 kcal/m^3). The gas leaves the gasifier at 1500 to 1900 F (810 to 1040 C) and, similar to the Koppers product, it contains considerable sensible heat--up to 10 percent of the heating value of the coal. If waste heat boilers are used to recover part of this heat, the Winkler gasifier can be a net exporter of high-pressure steam producing around 80 pounds per million Btu (144 kg/million kcal) of hot fuel gas.[11]

Coals with higher reactivity, such as lignite, yield lower exit gas temperatures and, hence, higher efficiencies than do low reactivity bituminous

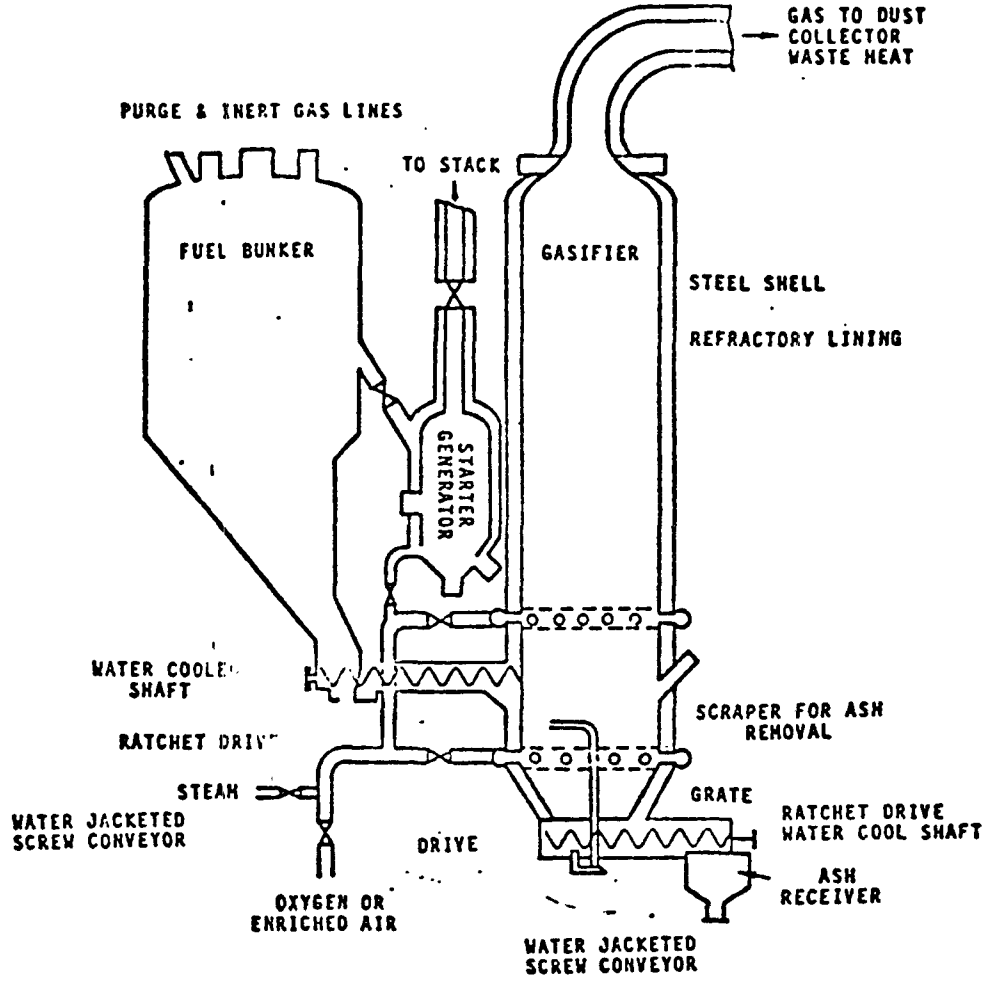

Winkler (Davy-Power Gas, Lakeland, Florida)

Characteristics:

- -Atmospheric pressure process
- -Fluidized bed operation
- -Typical gasifier outlet temperature 1600 F (870 C)
- -Can use non-caking or mildly caking coal
- -Coal crushed to less than 3/8 inch (9 mm)

FIGURE 3. WINKLER GASIFIER[6]

coals and anthracite. The Winkler unit has the lowest overall thermal efficiency of the four gasifiers considered--about 75 percent for the hot gas. This is due primarily to the relatively low carbon conversion efficiency, which results in high char loss. Also, about 70 percent of the ash in the coal is carried away with the gas stream.[6] Since the ash is usually in a molten form, a radiant heat boiler is used at the offtake to solidify it and thus prevent the molten ash particles from fouling the discharge ports.

The Winkler process is not capable of gasifying caking coal unless the coal has been pretreated to render it noncaking.[6] Caking coals tend to agglomerate in the fluidized bed and drop out, resulting in unacceptably high char loss and low efficiency. The coal must be crushed to a size less than 3/8-inch diameter (9 mm) prior to gasification. Normally, the coal should be dried to less than 8 percent moisture before crushing, though Winkler claims to be able to tolerate up to 30 percent moisture as long as the surface of the coal is not wet.

Presently, the largest available Winkler gasifier is 18 feet (5.5 m)[11] in diameter. The estimated capacity of the unit is 8 to 10 billion Btu (71 to 89 billion kcal) of hot gas per day.* Winkler reportedly is capable of designing a gasifier for 2,000,000 scf/day (57,000 m^3/day) that would operate anywhere from 500,000 to 3,000,000 scf/day (14,000 to 85,000 m^3/day) (1.5 to 9 billion Btu/day) for a turndown ratio of 83 percent. A plant in Wesselin, West Germany, however, is only rated at from 300,000 to 650,000 (8,5000 to 18,500 m^3/day) or a turndown ratio of 53 percent.

Wellman-Galusha

The Wellman-Galusha gasifier, Figure 4, is very similar to the Lurgi unit except that it operates at atmospheric pressure. The gasifier is designed and produced by McDowell Wellman of Cleveland, Ohio, and at one time it was used for making fuel gas for a variety of industrial processes in the United States, including kiln firing in the ceramics industry and furnace firing in the metals

---

* Based on 170 lb coal/hr ft^2 (826 kg coal/hr m^2) cross section[9].

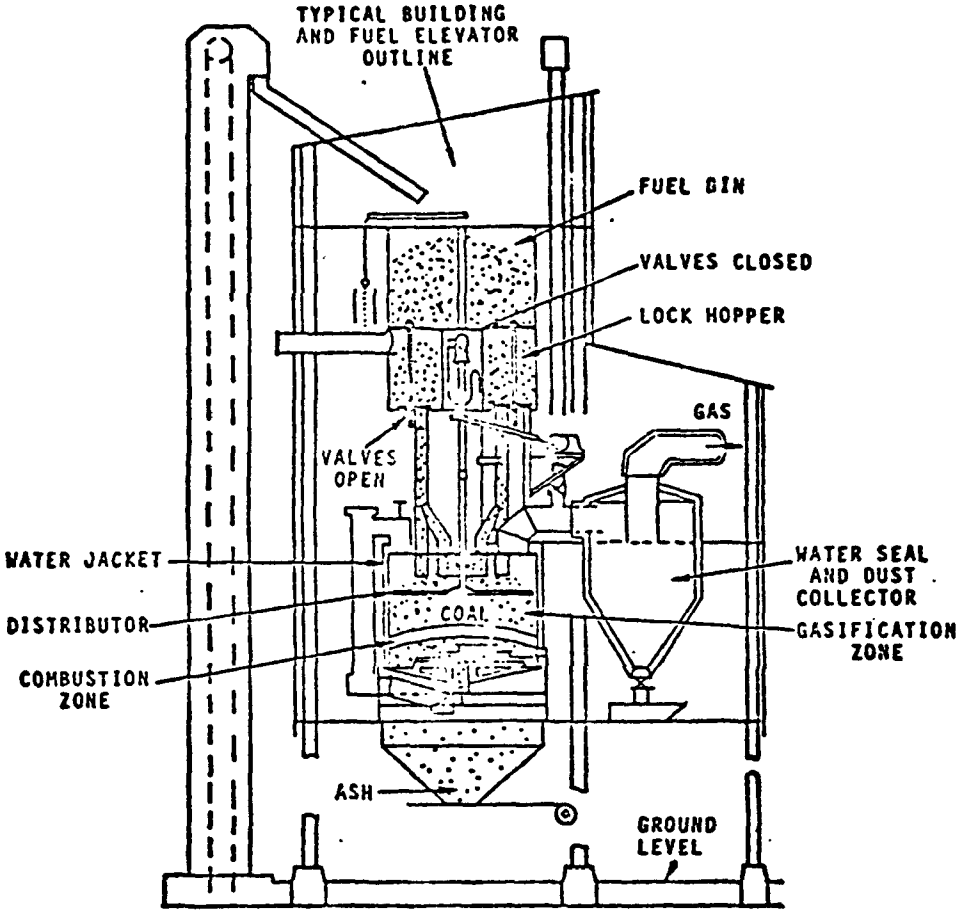

Wellman-Galusha (McDowell Wellman, Cleveland, Ohio)

Characteristics:

- -Atmospheric pressure process
- -Fixed bed operation with rotating eccentric grate, countercurrent gas flow
- -Typical gasifier outlet temperature 1250 F (675 C)
- -Uses double screened non-caking coal (1/2 to 2 inches) (12.5 to 50 mm

FIGURE 4. WELLMAN-GALUSHA FUEL GAS GENERATOR[12]

and glass industry. There are currently several plants in the United States that still have Wellman-Galusha gasifiers that either currently are being used or are kept in standby condition.

Since the Wellman process is a fixed-bed operation, it has restrictions in fuel properties similar to the Lurgi process. The Wellman process is not capable of gasifying strongly caking coals, but should be capable of gasifying mildly caking bituminous coals when a rotating agitator arm is used just below the surface of the coal bed. Also, the coal must be crushed and double screened to sizes from 1/2 to 2-inch (12.7- to 51-mm) diameter before being charged to the gasifier. According to one source[9], atmospheric units are also more sensitive to the presence of fines than are pressurized units.

The gasifier vessel is a cylindrical water-cooled shell with a unique eccentric, stepped rotating grate at the bottom. The gasifying medium is introduced through the grate and flows countercurrently through the coal bed, producing a fuel gas which is taken off at the top of the unit. Spent ash falls through the grate into the ash hopper, where it can be removed. Since the unit is not pressurized, there is no need for the complex pressure-sealed lock-hopper-type coal-feed and ash-removal system necessitated by the Lurgi concept. Also requirements on seals and packing glands around rotating shafts extending into the gasifier should be less stringent than for a pressurized unit, resulting in lower maintenance.

The largest gasifier McDowell Wellman currently manufactures is 10 feet (3.05 m) in diameter. The estimated capacity of the unit is up to 2-billion Btu per day (0.5 billion kcal/day) of hot fuel gas.* McDowell Wellman[12] claims to be able to gasify from 99 lb coal/hr-ft^2 (482 kg coal/hr m^2) based on the cross-sectional area of the gasifier down to as little as 7.5 lb coal/hr ft^2 (36.5 kg coal/hr m^2) without significantly affecting gas composition. This results in a turndown ratio in excess of 90 percent.

The Wellman unit can either be operated with air and steam--yielding a low-energy gas of about 170 Btu/scf (1500 kcal/m^3)--or with oxygen and steam--yielding an intermediate energy gas of about 280 Btu/scf (2480 kcal/m^3).

The gas leaves the gasifier at roughly 1250 F (677 C) and, as such, is only capable of generating low-pressure steam. No steam is generated in the

---

* Based on 99 lb coal/hr ft^2 cross section[12] 482 kg coal/hr m^2.

cooling water from the gasifier shell, as the water leaves the shell at around 180 F (82 C). The oxygen or air blast is normally saturated with the vapor from the 180 F (82 C) cooling water, however, supplying the steam requirements of the unit. The overall thermal efficiency of the Wellman-Galusha including the sensible heat in the hot fuel gas is 95 percent.

I-2. Fuel Gas Characteristics

Table 1 gives typical compositions of the fuel gas products for the four gasifiers covered. For the Lurgi, Winkler, and Wellman-Galusha processes, values are given for both oxygen-blow and air-blown systems. The Koppers process, however, when air blown requires extensive air preheat to maintain slagging conditions and, according to Koppers, is more economical to fire with oxygen and steam, reducing the required equipment sizes.

In addition to the basic constituents of the fuel gas shown in Table 1, there are also a variety of impurities present, the concentrations of which depend largely on the fuel being gasified. Table 2 gives an estimate of the relative magnitudes of concentrations of some of the nonhydrocarbon contaminants that might be expected in gas made from coal. Some of these impurities, depending on their concentrations, are unacceptable from an environmental standpoint, and may be objectionable when the gas is used in some process. In this case, they must be removed from the gas or reduced to an acceptable concentration by a subsequent gas cleanup process. These processes are discussed in Section II.

In addition to the nonhydrocarbon contaminants shown in Table 2, the raw gas also contains some ash and possible condensable tars. The Winkler gas has the highest ash content, with 70 percent of the ash in the coal being carried over in the gas stream. The Koppers process also yields a gas with relatively high ash content, with 50 percent of the ash in the coal being carried over in the gas stream. The Lurgi and Wellman-Galusha gases have lower ash contents in the raw gas than the Winkler or the Koppers, but due to their relatively low gas discharge temperatures produce relatively high concentrations of condensable tars. Unless the tars are removed, they could present problems if the gas used in a hot, raw state by condensing and fouling waste heat boiler tubes, burners, and gas distribution mains. The raw gas from the Winkler and Koppers-Totzek processes is at a high enough temperature to cause cracking and disintegration of most of the tar compounds into less objectionable forms.

TABLE 1. TYPICAL GAS COMPOSITIONS FOR COMMERCIAL GASIFIERS (VOLUME PERCENT)

Gasifier	Gasifying Medium	Type of Fuel	Composition (Volume Percent)					Btu/scf HHV	$kcal/m^3$
			CO_2	CO	H_2	CH_4	N_2		
Lurgi	Oxygen-steam	Brown coal	32	13	36	15	1	322	2670
	Air-steam	Brown coal	14	16	25	5	40	183	1625
Koppers-Totzek	Oxygen-steam	Bituminous coal	7	56	35	0	2	290	2580
Winkler	Oxygen-steam	Lignite	20	35	40	3	2	117	1040
	Air-steam	Lignite	10	22	12	1	55	273	2420
Wellman-Galusha	Oxygen-steam	Bituminous coal	12	52	33	1	2	282	2500
	Air-steam	Coke	3	29	15	3	50	172	1530

TABLE 2. TYPICAL CONCENTRATIONS OF NONHYDROCARBON IMPURITIES IN COAL GAS[14]

Constituent	Concentration, volume percent
H_2S	0.3 to 3.0
CS_2	0.016
COS	0.009
Thiophene	0.010
Mercaptans	0.003
NH_3	1.1
HCN	0.10 to 0.25
Pyridine bases	0.004
NO	0.0001

I-3. Comparison of Commercial Gasification Processes

Thermal Efficiency

As a result of the inherent efficiency of the fixed-bed process and the low gas exit temperature, the Lurgi and the Wellman-Galusha gasifiers have the highest thermal efficiency of the four processes, of over 90 percent for the hot, raw gas. The thermal efficiency of the hot gas for the Koppers process is around 86 percent, though nearly 20 percent of this is in the sensible heat of the 2700 F (1480 C) gas. (Table 3 also gives cold gas efficiency at a gas temperature of 70 F and sensible heat content.) The Winkler process has the poorest overall thermal efficiency of 76 percent, which is due primarily to the low carbon conversion efficiency and high char loss of the fluidized-bed process. This efficiency may be somewhat misleading, however, as the char represents a usable by-product and may be used as a boiler fuel or recycled to the gasification process.

Steam-Raising Capacity

In some processes, most notably that of Koppers, a considerable amount of the energy in the fuel gas is in the form of sensible heat. The common commercial practice today for all four processes is to recover at least part of this heat in a waste heat boiler prior to going through a gas cleanup stage. Table 4 gives estimates of the relative amounts of steam that could be raised in a waste heat boiler for each of the four processes.

Due to the low temperature of the gases in the Lurgi and Wellman-Galusha processes, they have the least sensible heat content and thus the lowest steam raising capacity of the four processes. They also are limited to generating low pressure steam (due to the low temperature), which in the case of the Lurgi process does not allow the steam to be used in the 20-atmosphere process. The Lurgi process, however, does generate steam in the cooling water jacket of sufficient pressure to be used in the process. This steam generally will supply about 20 percent of the process steam requirements, and the rest of the steam must be imported. The Wellman-Galusha process uses much less steam per Btu of fuel gas than the Lurgi and generally the air or oxygen blast is saturated with vapor from the 180 F (82 C) cooling-water flow, satisfying the steam requirements

TABLE 3. TYPICAL UNIT CHARACTERISTICS FOR COMMERCIAL GASIFIERS

Gasifier	Type	Pressure, Atmospheres	Gas Discharge Temperature F	Efficiency Hot[a]	Efficiency Cold[b]	Sensible Heat[c]	Gasification Rate[d]	Unit Output, 10^9 Btu/day	Gasifier Size, ft	Turndown[f]	Coal Size
Lurgi	Fixed Bed	20	950	0.91	0.82	0.09	300	7-9	12	50	1/8-1-1/4 in.
Winkler	Fluidized Bed	1	1500-1900	0.76	0.66	0.10	170	8-10	18	53	< 3/8 in.
Koppers-Totzek	Entrained Slagging	1	2700	0.86	0.67	0.19	16 16	14-18 6-8	4 burner 2 burner	65 35	90% thru 200 mesh
Wellman-Galusha	Fixed Bed	1	1250	0.95	0.82	0.13	99	< 2	10	90	1/2 - 2 in.

(a) Overall thermal efficiency of process with fuel gas at discharge temperature (energy in hot fuel gas/energy in coal).

(b) Overall thermal efficiency of process with fuel gas at ambient temperature (70 F) with no sensible heat recovery (from Reference 9).

(c) Energy of sensible heat in the fuel gas at the discharge temperature as a fraction of the energy in the coal (Reference 9).

(d) Gasification rate expressed in pounds of coal per hour per square foot of gasifier crossectional area except for Koppers-Totzek which is based on pounds of coal per hour per cubic foot of gasifier volume.

(e) Inside diameter of gasifier shell.

(f) Turndown expressed as percent of full load = (minimum operating load/maximum operating load) x 100.

TABLE 4. STEAM AND OXYGEN REQUIREMENTS FOR OXYGEN BLOWN GASIFIERS (lb/10^6 Btu of cold fuel gas)[a]

Gasifier	Oxygen Required	Steam Required	Jacket Steam	Export Steam
Lurgi	45	184	37	67[b]
Koppers-Totzek	80	30	23	150[c]
Wellman-Galusha	90	50	--	62[d]
Winkler	70	20	--	100

(a) To convert to kg/10^6 kcal, multiply 1.8.

(b) Pressure too low for process use.

(c) Calculated from data in Table 3 assuming 75 percent recovery of sensible heat.

(d) Calculated from data in Table 3 assuming 50 percent recovery of sensible heat.

of the unit.[13] The low-pressure steam from a waste heat boiler would then be available for other use.

Due to their relatively high gas temperatures of around 2000 F (1090 C) or above, both the Koppers-Totzek and Winkler generators are exporters of high-pressure steam. The Koppers unit also generates steam in the cooling water flow which should be equivalent to about 70 percent of the process steam requirements. The Winkler gasifier is refractory lined and has no cooling water flow, but with a waste heat boiler should be able to generate approximately 100 pounds of steam per million Btu (180 kg/10^6 kcal) of cold fuel gas, with only 20 percent required for process needs.

Fuel Requirements

The Koppers-Totzek process is the only one of the four gasification processes discussed that is capable of gasifying strongly caking coal with no difficulty. Both Lurgi and Wellman-Galusha manufacture gasifiers with rotating, water-cooled agitator arms operating just below the surface of the coal bed inside the gasifier to enhance their ability to handle caking coals. These units, however, have only demonstrated an ability thus far to handle mildly caking coal and, then, only with greater difficulty than noncaking coal. In the Winkler process some pretreatment of caking coal would be necessary to render it noncaking. Agglomeration of particles in the fluidized-bed process results in low carbon-conversion efficiency, high char loss, and either air or oxygen breakthrough in the fuel bed, resulting in inconsistent gas composition.

All four processes require some coal sizing prior to gasification. Both the Lurgi and Wellman-Galusha units require the coal to be crushed and double screened, allowing restricted sizes for gasification. The operation of the Wellman-Galusha process is more sensitive to the presence of fines than that of Lurgi and is restricted to sizes from 1/2 to 2-inch diameters. The Lurgi process accepts sizes from 1/8 to 1-1/4 inch (3- to 30-mm) diameters and will accept a small percentage of fines. Normally, however, fines must either be discarded from the process or briquetted prior to gasification. The Winkler process is restricted to the use of crushed coal below 3/8-inch diameter; also, more uniform size contributes to more efficient gasification. The Koppers-Totzek process uses pulverized coal, with at least 90 percent passing a 200-mesh screen.

Unit Capacities

Currently, the Koppers-Totzek gasifier has the highest unit capacity of up to 18 x 10^9 Btu/day (4.5 x 10^9 kcal/day). The turndown capacity is about 35 to 65 percent, depending on whether it is a two-burner or four-burner unit, respectively. The current Lurgi and Winkler units are estimated to have about the same maximum capacity of around 7 to 10 billion Btu/day (1.7 to 2.5 billion kcal/day). The Lurgi process reportedly has a turndown capacity of about 50 percent[9] and the Winkler unit is estimated to be between 50 and 80 percent[11]. The Wellman-Galusha unit has the smallest unit capacity of approximately 2 billion Btu/day (0.5 billion kcal/day), with an estimated turndown ability of up to 90 percent.

Operational

The Lurgi unit is the most complex of the four gasifiers, both from a mechanical and operational standpoint. A sophisticated maintenance program would be necessary to maintain the various mechanical components and high-pressure seals to minimize downtime. Town gas installations have claimed an availability factor as high as 80 percent[6], though this is not typical of operation for sustained periods at peak load due to daily and seasonal demand variations. Start-up and shutdown of the Lurgi require a significant amount of time and complicated procedures. Start-up of the gasifiers at Westfield, Scotland, requires approximately 7 hours.

The Wellman-Galusha unit, though similar in design to that of the Lurgi, is simpler to operate and maintain due to nonpressurization. According to McDowell Wellman[15], one man ordinarily handles two gasifiers.

Both the Winkler and Koppers-Totzek units are mechanically uncomplicated, with no moving parts inside the gasifier. Both can be started up from standby position in the relatively short time of about 1/2 hour, and both companies claim on-stream factors greater than 90 percent.[6]

SECTION II

II. FUEL GAS CLEANUP

II. FUEL GAS CLEANUP

The hot raw gas from coal gasification contains many impurities, as was brought out in Section I and Table 2. Since coal gasification is basically the partical combustion of coal, with a slight addition of steam, these impurities are typical of those found in any coal combustion process. Due to the partial oxidizing conditions of coal gasification, however, these constituents appear in a reduced form from that in which they would appear in a complete combustion process.

Two impurities of primary interest from an environmental standpoint that form gaseous pollutants are sulfur and nitrogen compounds. In the products of gasification, sulfur appears in the reduced state of primarily hydrogen sulfide (H_2S), with generally very small amounts of carbonyl sulfide (COS), carbon disulfide (CS_2), and trace amounts of mercaptans. Nitrogen compounds in the fuel are converted primarily to ammonia (NH_3), with small amounts of hydrogen cyanide and trace amounts of nitrogen oxide (NO) and pyridine bases.

Also, the raw gas contains particulates in the form of fly ash. Two of the processes, the Winkler and Koppers-Totzek, carry at least 50 percent of the ash over in the gas stream, which would be somewhat typical of a normal coal combustion process. The Lurgi and the Wellman-Galusha processes, due to the low gas velocities through the fixed bed of coal, would have less ash carryover, though these two processes have higher concentrations of condensable tar-forming compounds than either the Winkler or the Koppers-Totzek processes. If these tar compounds are not removed from the gas prior to use they can condense in burners and the distribution mains, causing considerable difficulties.

One advantage of coal gasification over direct combustion of coal is the relative ease with which harmful pollutants can be removed from the products of gasification compared with their removal from the flue-gas products of complete combustion. In regard to the products from complete combustion, the sulfur and nitrogen compounds are in the oxidized forms of SO_2 and NO_x diluted in large volumes of flue gas, effective removal of which has proven extremely difficult and for which no fully proven commercial processes of removal presently exist. In the reduced forms of H_2S and NH_3, these compounds are more easily removed and commercial processes are available that are capable of extremely

high removal efficiencies.* Also, the volume of gas to be cleaned in the products of gasification for atmospheric pressure units is less than half that of the eventual volume of flue gas products and can be up to 40 times less with a pressurized process like the Lurgi. This results in smaller equipment being needed for gas cleanup and greater ease of removal due to higher concentrations of impurities.

It appears that the most troublesome area of fuel-gas cleanup currently is desulfurization. For meeting the current standard for coal-fired steam generators of 1.2 lb SO_2 per million Btu heat input,[16] some degree of desulfurization will be necessary whenever coal of over 1 percent sulfur by weight is gasified (Figure B-1, Appendix B). A gas sulfur removal of slightly over 90 percent should be sufficient for achieving environmental standards with coals of relatively high sulfur contents of about 7 percent (Figure B-2, Appendix B).

The only desulfurization processes that have been commercially proven operate at temperatures below 300 F. Since 10 to 20 percent of the original heating value of the coal is in sensible heat in the gas, there is considerable incentive to clean and use the gas at elevated temperatures. Four processes that are currently being developed to desulfurize the gas at temperatures above 1500 F (815 C) are the Battelle-Northwest molten salt scrubbing process, the Air Products and Chemical Company's solid absorbent process, the Bureau of Mines iron oxide process and Consolidation Coal Company's dolomite process, though it is not certain when any will be commercially available. Three of these four cleanup processes, the Bureau of Mines hot iron oxide, the Air Products solid absorbent processes, and the Consolidation Coal process, will also require development of a hot particulate removal system, and it may also be desirable to remove condensable tars and ammonia at high temperatures.

The conventional cold cleanup processes listed in Table B-1 (Appendix B) were mostly developed for cleaning synthesis gases or refinery gases. All but two--the iron sponge and activated carbon processes--use some form of liquid scrubbing to either chemically or physically absorb H_2S and sometimes CO_2 and HCN. In most of the processes, the sorbents are regenerated by stripping off the H_2S and other acid gases with air or steam. The concentration of H_2S in the stripped gas is generally high enough (at least 10 percent) to allow recovery of sulfur in a Claus conversion unit.

*For more complete descriptions of typical commercial cleanup processes see Appendix B.

All of the cleanup processes mentioned in Table B-1 are capable of achieving quite low concentrations of H_2S in the clean fuel gas--on the order of 10 ppm or below. To meet current environmental standards of 1.2 lbs SO_2/million Btu heat input[16], concentrations on the order of 1000 ppm H_2S would be acceptable (Figure B-4, Appendix B). Almost all of the processes in Table B-1 employ expensive sorbents, often at temperatures below ambient or at high pressures. Some processes require high circulating liquor rates and large amounts of stripping steam for effective sulfur removal and regeneration.

Removal of nitrogen compounds (NH_3) may not be critical for achieving acceptable NO_x levels. Because gasification followed by final combustion is basically a two-stage combustion process, control of NO_x can be handled by suitable control of combustion conditions in the final combustion stage. If a water scrub is used for particulate and tar removal in a cold gas cleanup process, a substantial amount of ammonia will also be removed. Since some of this NH_3 would be converted to NO_x in the final combustion stage with removal of ammonia resulting, total NO_x emissions would thus be reduced.

For cold gas cleanup processes, particulate loadings, below the environmental standard of 0.1 lb per million Btu[16] should be easily attainable by conventional collection devices. However, for the proposed hot gas cleanup processes, development of a suitable high-temperature particulate removal process may be necessary.

Some of the liquid scrubbing processes have the desirable characteristic of oxidizing H_2S directly to elemental sulfur after absorption, negating the need for a Claus kiln or other type of sulfur recovery device. These processes have not been well developed, however, and seem to be declining in favor.[14] Also, the presence of arsenates in the Thylox and Vetrocoke processes may make them undesirable, due to the potential for leakage of a hazardous pollutant.

There are several advantages to a dry process, though neither of the two commercial processes mentioned appear readily adaptable to current use. The iron sponge process is most adaptable to gases with low H_2S concentrations of around 300 ppm[17], which would already be environmentally acceptable (see Figure 8). It is also a batch process that would result in a significant amount of solid waste. The activated carbon process is

capable of high sulfur removal, but would also need frequent bed replacement due to sulfur forming in the pores.

SECTION III

CONSIDERATIONS IN UTILIZING LOW AND INTERMEDIATE-ENERGY GAS FROM COAL IN INDUSTRY

III. CONSIDERATIONS IN UTILIZING LOW AND INTERMEDIATE-ENERGY GAS FROM COAL IN INDUSTRY

III-1. Comparison of Characteristics of Low and Intermediate-Energy Gas to Natural Gas

An important consideration in analyzing the ease of retrofitting any combustion process from one fuel to another is a comparison of the characteristics of the fuels involved. Ideally, a thorough comparison of the characteristics would rely on laboratory and field experiments which are beyond the scope of this study. By comparing certain parameters calculated from typical gas compositions for the commercial gasifiers considered in this study, however, some insight can be gained into various aspects of the relative ease of applying them in retrofit situations. For purposes of comparison, natural gas was chosen as the fuel that is to be replaced by low energy gas (150 Btu/scf/1332 kcal/m^3) or intermediate energy gas (300 Btu/scf/2664 kcal/m^3) from coal. Since natural gas is the most widely used fuel in industry and also since many processes have capability for firing either natural gas or oil, this was felt to be a valid basis for comparison.

Table 5 gives high heating values for the gases in Table 1 compared with natural gas, as well as the heat release per cubic foot of stoichiometric mixture, which is roughly comparable to the heat release per cubic foot of combustion products. The heating value of the fuel is useful in comparing the relative fuel flow rates and pressure drops necessary in fuel supply mains and nozzle mix type burners to obtain comparable heat release rates. The heating value of the stoichiometric mixture is useful in comparing the relative flow rates and pressure drops of the gases through premix type burners, (where fuel and air are mixed prior to being burned), and flues, fans, and heat exchangers downstream of the combustion zone.

Table 5 also gives the ratio of flow rates of the lower energy fuels to natural gas to obtain the same heat input along with the resulting ratio of flow rates of the stoichiometric mixtures. These are useful in comparing the flow rates of combustion products. As can be seen from the data, typical intermediate energy gas from oxygen-blown producers must be delivered to the point of application at 3 to 4 times the flow rate of natural gas to achieve the same

TABLE 5. COMPARISON OF VOLUMES OF FUEL GAS TO NATURAL GAS

Process	Gasifying Medium	HHV Btu/scf		Relative Flow Rates Fuel Gas/Natural Gas		Relative Pressure Drop Fuel Gas/Natural Gas	
		Fuel Only	Stoichiometric Mixture	Fuel	Stoichiometric Mixture	Fuel	Stoichiometric Mixture
Lurgi	Oxygen-steam	322	86.3	3.31	1.12	8.2	1.26
	Air-steam	188	74.7	5.83	1.29	27.5	1.66
Koppers-Totzek	Oxygen-steam	290	92.4	3.68	1.05	9.7	1.10
Winkler	Oxygen-steam	273	86.2	3.90	1.12	11.1	1.26
	Air-steam	117	62.2	9.10	1.55	84.5	2.40
Wellman-Galusha	Oxygen-steam	282	87.4	3.78	1.10	10.9	1.21
	Air-steam	172	73.2	6.20	1.32	33.3	1.74
Natural Gas		1066	96.6	1.0	1.0	1.0	1.0

heat input. The low energy fuels from air-blown producers require anywhere from 6 to 9 times the flow of natural gas. The differences in the flow rates of the stoichiometric mixtures are less pronounced than those for the fuel, since the higher heating value fuels require proportionately greater amounts of air for complete combustion. A 5 to 12 percent increase in the flow rate of combustion products would be expected in switching to an intermediate-energy gas from an oxygen-blown producer, and a 30 to 55 percent increase would be expected in switching to a low energy gas from an air-blown producer. The corresponding relative increase in pressure drop for the various fuels that would result if the same fuel and flue gas equipment is used is also shown. For intermediate-energy fuels about 10 times the pressure drop would be incurred through existing distribution mains and burners with a corresponding 10 to 30 percent increase in pressure drop through heat exchangers and other gas passages downstream of the combustion zone. For the low energy fuels, however, pressure drops of 30 to 80 times that for natural gas would be expected in existing mains and burners, and corresponding pressure drops in passages downstream of the combustion zone would be from 1-1/2 to 2-1/2 times those for natural gas.

The increased flow rates and pressure drops in fuel supply systems, burners, heat exchangers, and exhaust flues that would be encountered in retrofitting a process from the use of natural gas to low or intermediate energy gas while maintaining the same process heat input could pose a serious problem. Supplying the necessary increased fuel supply rates to various processes throughout an industrial plant will require either pressurized distribution mains, larger distribution mains, or some combination of the two. Pressurized mains would complicate the problem of potential leakage of a toxic carbon monoxide-laden gas into working areas. Increasing the size of distribution systems to handle the increased flow at lower pressures could create problems for processes widely dispersed throughout the plant or in areas where space is at a premium. Only one of the four gasification systems considered commercial in this study--i.e., the Lurgi process--delivers the fuel gas under pressure (300 to 500 psig, 2070 to 3430/m^2). Fuel gas from the other three processes would have to be compressed either before or after the gas cleanup stage for pressurized distribution.

The increased flows and pressure drops occurring downstream of the combustion zone, though less than those in fuel supply systems, will potentially be a more serious problem. Induced draft and forced draft fans would have to be boosted to higher operating pressures to compensate for higher flow rates. In some cases it may be possible to reduce the pressure drop through the process, such as by removing tubes in boiler heat exchangers, to allow greater volumes of flow at lower pressure drops without upsetting the heat transfer characteristics of the process.

If changes in the process cannot be made to compensate for increased flows and pressure drops, process derating may be necessary. This problem will probably be most severe for handling the increased volumes of flue gases rather than the handling of increased volumes of fuel. Analysis of Table 5 reveals that inability to handle additional flue gas volume could result in a derating of from 5 to 10 percent for intermediate energy (300 Btu/scf; 2664 Kcal/m^3) gas or from 25 to 35 percent for low energy gas (150 Btu/scf; 1332 Kcal/m^3).

Alterations necessary in burner designs are uncertain without laboratory data on which to base the redesign. Burners that at one time were used for low energy gas are not readily available today as production items. Also, the old designs would probably no longer be acceptable in most cases, as advances in burner and process technology have resulted in burners with generally wider stability ranges, intermittent instead of continuous piloting, and sophisticated combustion monitoring and control.

As part of this study, an analysis was made comparing combustion characteristics relating to flame stability of low and intermediate energy gases typical of the commercial gasifiers considered in this study to the characteristics of natural gas. The complete results of the study are given in Appendix A.

The analysis was based on the critical flashback velocity gradient calculated from typical gas compositions. This parameter has been found very useful in estimating the inherent flame stability of various fuels in that it is related to the blowoff limits in an enclosed system, the burning velocity, and the chemically controlled reaction rate. From the analysis it was concluded that there should be relatively little difficulty in designing burners with adequate flame stability for the intermediate energy fuels of around 300 Btu/scf; 2664 kcal/m from oxygen-blown producers; however, stability problems would be more severe with the lower energy fuels from air-blown producers.

It is generally felt that adequate industrial burners could be developed for intermediate and most low energy gases. Generally, flow areas in fuel supply lines and burner parts would have to be increased to handle the increased fuel flows necessary to maintain the same energy input as with natural gas or oil. Overall burner diameters or tile diameters probably would not be increased in most cases, however, minimizing the amount of modification necessary in the walls of the furnace.

Larger general-purpose burners should be easiest to retrofit to low or intermediate energy gas. However, the performance of some specialty types of burners may be difficult to duplicate. These include high-intensity or high-velocity burners, burners where particular flame shapes are necessary (such as flat flame burners), and applications requiring carefully controlled mixing and combustion rates such as flow-through or pull-through radiant tubes.

III-2. Environmental Considerations

The gasification of coal followed by its use as a fuel in a process is basically two-stage combustion. If the intermediate product gas or low energy gas is used directly in a process, then environmental considerations are basically the same as those for normal two-stage coal combustion. One advantage of gasification, however, is that certain undesirable pollutants can be removed from the fuel gas more easily than they can from the eventual flue gases or products of combustion. The two primary gaseous pollutants, S and N, occur in higher concentrations in the fuel gas than in the combustion products and also appear as the reduced forms of H_2S and NH_3, for which commercial removal processes have been developed (see Table B-1). Also, the volume of gas to be cleaned in the fuel gas stage is about half the eventual volume of the products of combustion for nonpressurized units and can be much less for pressurized units like Lurgi gas producers.

Figure 5 shows a schematic diagram of a gasification system with a cold gas cleanup process for sulfur removal and subsequent sulfur recovery. The diagram illustrates various points in the system where discharges to the environment can occur and must be evaluated in any given application.

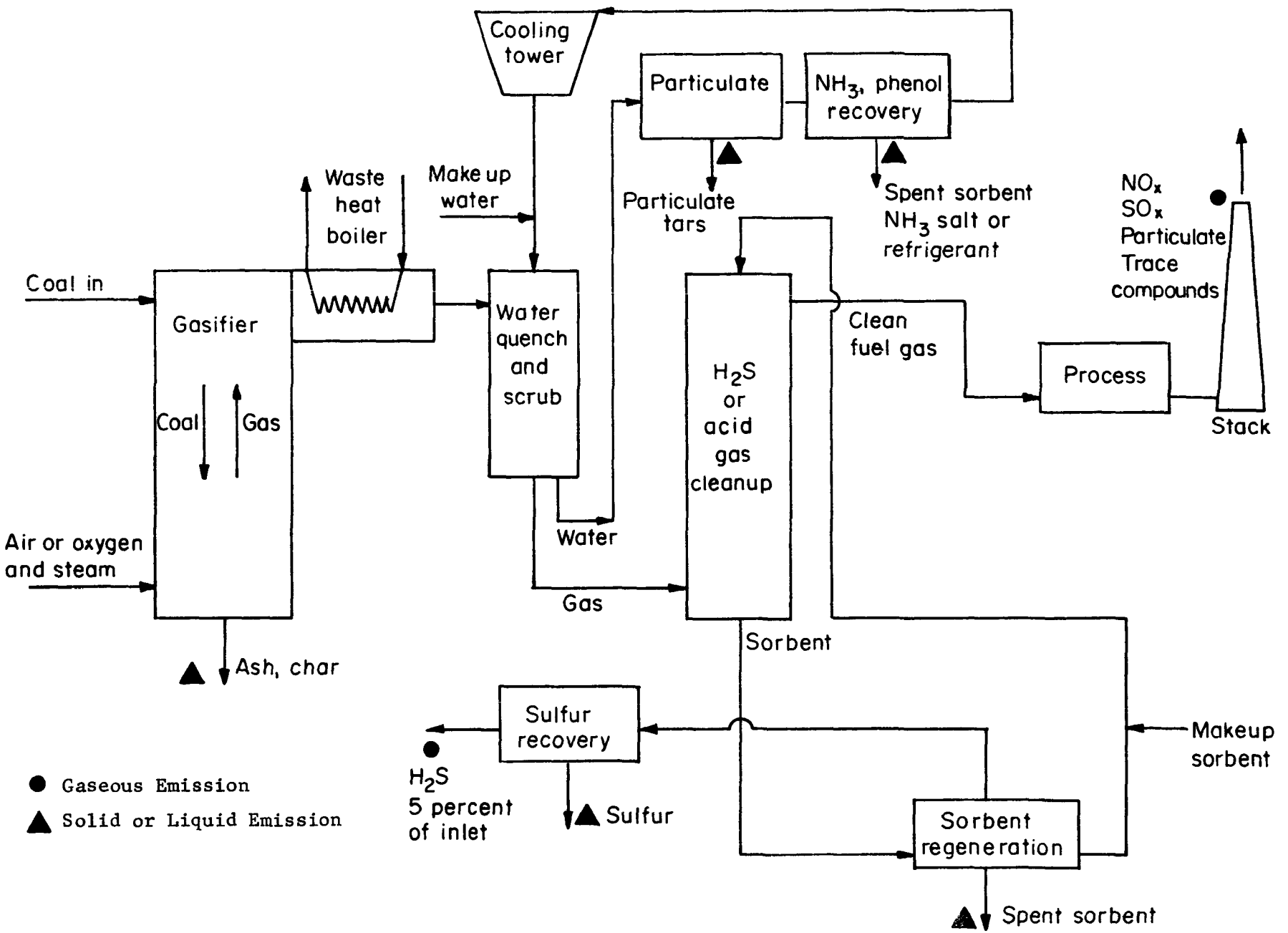

FIGURE 5. TYPICAL GASIFICATION SCHEME WITH COLD GAS CLEANUP

If the H_2S in the fuel gas is not removed prior to combustion, it will be converted primarily to SO_2. Commercial processes have been developed (see Table 5) for removing H_2S from fuel gas down to concentrations in the range of 10 ppm or less. For most gases, a level of less than 1000 ppm would result in SO_2 emissions less than the current environmental standard for steam generators of 1.2 lb $SO_2/10^6$ Btu heat input (see Figure B-4). All the processes in Table B-1 remove H_2S with some kind of sorbent. For most of the processes, the sorbent is regenerated by stripping off the H_2S and other acid gases. The concentration of H_2S in the stripping gases should be sufficiently high (at least 10 percent) to allow recovery of elemental sulfur in a Claus process. A Claus kiln is capable of removing approximately 95 percent of H_2S from the stripping gas; the remaining H_2S in the tail gas represents a potential pollutant and should at a minimum be burned to SO_2 with a flare. The tail gas from the sulfur recovery process could be further scrubbed for additional H_2S removal, though it is felt in general that the SO_2 emissions from the raw tail gas combined with the emissions from the scrubbed fuel gas would be less than the environmental standard of 1.2 lb $SO_2/10^6$ Btu heat input (2.16 kg/kcal).

All but two of the processes in Table B-1 involve liquid scrubbing with a variety of absorbents. Though these absorbents may be regenerable, eventually they deteriorate to a point where a bleed stream must be taken off and fresh absorbent added to maintain acceptable reactivity. The spent sorbent from the bleed stream represents a potential pollutant. Some of the processes mentioned in Table 4 for oxidizing H_2S directly to elemental sulfur--Thylox and Vetrocoke processes involve the use of poisonous arsenates in the absorbing solution which would complicate the handling of spent sorbent.

Another potential pollutant is the sulfur formed in the sulfur recovery process. If a significant amount of low energy gas were used in industry and elemental sulfur was the chief product of the H_2S removal process, the marketability of the sulfur would be questionable and the sulfur would thus become a solid waste.

In any sulfur removal process, however, the sulfur compounds must be disposed of in some form. Proposed lime and limestone scrubbing systems for removing SO_2 from stack gases convert the sulfur to solid waste in the form of $CaSO_3$ and $CaSO_4$, which involve a greater amount of solid waste than with elemental

sulfur. Some schemes would convert SO_2 to sulfuric acid, H_2SO_4, as a usable by-product which would suffer from more difficult storage and marketability problems than elemental sulfur and would be less stable and more difficult to dispose of.

NO_x emissions evolve by basically two mechanisms: fixation of airborne free nitrogen to NO_x with high temperatures in the combustion zone and oxidation of fuel-bound nitrogen to NO_x, which occurs at lower temperatures. In the reducing atmosphere of the products of gasification, fuel-bound nitrogen is converted to NH_3. If the ammonia is not removed from the fuel gas, such as in a water scrubbing operation, it would be carried through to the final combustion process and some of it would be oxidized to NO_x in the same manner as would occur in two-stage coal combustion. The formation of NO_x due to thermal fixation of free nitrogen in the air should be similar to that from firing natural gas, as this mechanism will depend primarily on the temperature of the final combustion process. In summary, if NH_3 is stripped from the fuel gas prior to combustion, emissions of NO_x should be similar to that from natural gas. If NH_3 is not stripped from the fuel gas, emissions of NO_x should be no greater than those from two-stage coal combustion. Since NO_x formation is somewhat dependent on the characteristics of the combustion process and because little data exist on NO_x emissions from two-stage combustion of coal, an accurate assessment of NO_x emissions will depend on actual test data.

Particulates can be removed from the fuel gas by standard particulate removal processes such as water scrubbing, filtration, or electrostatic precipitation. There should be no problem in obtaining environmentally acceptable dust loadings in the fuel gas itself. When the fuel gas is used in processes that are essentially particulate free--that is, when the process itself does not contribute particulates to the gas stream--there should be little problem attaining environmentally acceptable particulate emissions. In some processes, cement and lime kilns for example, particulates are entrained in the combustion gases and must subsequently be removed. In general, low energy gas will result in slightly higher--possibly 20 to 30 percent higher--volume throughputs of combustion gases than natural gas, which could result in greater entrainment of particulates and, hence, higher dust loadings in the flue gases of these processes. In some cases, where particulate emissions are marginally acceptable and the process uses oil or natural gas, dust loadings in the flue gases may

become unacceptable. In those cases that were using coal directly, such as pulverized coal-fired cement kilns, the removal of ash in the low energy gas may offset the increased dust entrainment in the kiln itself. In summary, for those processes that do not themselves contribute to the dust loading of the combustion gases, particulate emissions should be well within environmental standards. In those processes originally firing natural gas or oil where particulates are entrained in the combustion gases, dust loadings in the flue gases will increase.

Another source of particulates in using low energy gas is in fugitive dust from coal storage and handling facilities. This potential source of dust is inescapable whenever coal is used as a fuel. Its control will depend largely on properly designed and maintained coal-handling equipment.

The particulates removed from the gas stream as well as the ash from the gasifier itself represent a solid waste. Some industries may have sufficient room and facilities for ash disposal, other industries will require the ash and other solid waste by-products to be shipped to a suitable disposal site.

If a water scrub is used to cool and clean the gas prior to sulfur removal, the constituents removed by the water represent an additional source of pollution. Normally, the water would remove particulates, condensable tars, NH_3, some CO_2, and negligible amounts of H_2S and other acid gases. The particulates and tars can be removed by conventional filtration devices. Tars can be separated as usable by-products and recycled to the gasifier, used directly as fuels in some processes, or sold as feedstock for petrochemical synthesis. NH_3 and other acid gases can be stripped from the water with heat and NH_3 can be recovered as a marketable ammonium salt by scrubbing with strong H_2SO_4 or H_3PO_4, NH_3 can be recovered as refrigeration grade anhydrous ammonia with a process like the Phosam Process.[17]

Another area of environmental concern includes hazards created by the use of low energy gas in industrial processes in the plant itself. One of these is the increased toxicity of low or intermediate energy gas over natural gas due to its content of carbon monoxide. Where small leakages of natural gas could be tolerated in distribution mains and around burners and other points of application, these leakages may be intolerable from a health-hazard standpoint for low energy gas. The fact that many industries will want to distribute low energy gas under pressure to obtain the necessary increased

burner pressures and higher flow rates while keeping distribution mains as small as possible will only compound the problem.

The higher pressures and flow rates that would be necessary in distributing and burning low energy gas over natural gas creates another in-plant hazard in the form of increased noise. The two primary sources of increased noise are those stemming from higher pressure drops across pressure-reducing devices and combustion roar resulting from increased volumes of flue gas products and increased pressure drops across burners.

Both problems--increased toxicity of low energy gas over natural gas and increased noise levels inside factories--require further study to accurately assess their effects.

SECTION IV

UTILIZATION OF LOW AND INTERMEDIATE ENERGY GAS IN INDUSTRY

IV. UTILIZATION OF LOW AND INTERMEDIATE ENERGY GAS IN INDUSTRY

IV-1. Criteria for Evaluating Ease of Retrofit of Industrial Processes

When analyzing the potential applicability of low or intermediate energy gas as a retrofit fuel in the wide variety of fuel uses that commonly occur in industrial furnaces and other types of processes, some basic criteria are necessary for judging the relative applicability or ease of retrofit based on the general characteristics of the process. The criteria which have evolved as most significant, based on analyses presented in this study and conversations with individuals closely associated with industrial fuel use, are the following:

- Processes with a relatively few number of large burners should be easier to retrofit than processes with a large number of small burners that require extensive manifolding and control.
- Processes in which specific flame shapes or other flame characteristics are required, such as flat flame burners, will be difficult to duplicate in retrofit and may require field testing and process modification. General-purpose burners, where specific flame characteristics are not important, would be easiest to retrofit.
- Processes requiring particular fuel mixing or combustion rates such as those using radiant tubes will be difficult to convert and may require extensive testing and process modification.
- Processes with relatively large combustion chambers and the ability to easily increase volume throughput of combustion products by at least 10 percent and possibly up to 30 percent will be relatively easy to retrofit.
- Processes sensitive to small amounts of sulfur in the combustion gas will be more difficult to retrofit and will place greater demands on the gas cleanup system employed.
- Processes in which the lower flame temperature of some lower energy gases from coal will cause reduced furnace temperatures and lower process rates may require regenerators

for preheating the fuel and thus will be more difficult to retrofit.

- Processes that are physically localized in the plant will be easier to retrofit than those widely dispersed around the plant. This will depend on the extent to which distribution mains must be replaced or modified and how much power is required for distributing the gas.
- Industrial plants or large processes with widely varying load factors or frequent start-up and shutdown will be difficult to match to the load-following capability of the gasifier. Processes that are operated more or less continuously with only periodic shutdowns for maintenance will be most amenable to gasification.
- Processes already using lower energy gases (such as blast furnace top gas, coke oven gas, or low-grade refinery gases mixed with natural gas) should be little affected by substitution of low or intermediate energy fuels for natural gas in the mixture.
- Processes in relatively open areas where a high degree of ventilation can minimize the toxic effect of gas leakages and where installation of larger distribution mains is not an immediate problem should also be easier to retrofit.

Fuel use in industrial processes encompasses an exceedingly wide variety of specialized applications involving a myriad of furnace and process configurations. Analyzing the potential applicability of low or intermediate energy gas from coal to the broad range of potential industrial uses can, therefore, only be attempted here on a general basis. Even when considering a particular type of process, furnace designs and other aspects of the process relevant to its ease of retrofit can vary extensively from application to application. Therefore, even though a particular type of process may be considered relatively attractive from a retrofit standpoint, a particular application may be highly unattractive.

IV-2. Classification of Common Industrial Processes According to Their Ease of Retrofit

Based on the preceding criteria describing general characteristics of a process that should directly affect its ease of retrofit, some categorization of the broad range of industrial processes can be made. For purposes of this study, processes were broken down into three groups indicative of their relative ease of retrofit or applicability to the use of low and intermediate energy gas.

- Group I: These are processes that are felt to be most attractive to retrofit of low or intermediate energy gas. Processes in this group should require minimal modification and minimum reduction in process rate or product quality. These processes are also felt to represent relatively large energy uses in industrial plants. It is felt that immediate efforts in applying low energy gas to industrial plants can best be expended on large concentrated energy uses rather than the wide variety of diverse fuel uses common in nearly every industry.

  The exact modifications necessary for retrofit are difficult to assess in general and will depend largely on each individual application. In many cases, modifications will primarily involve new burners, with little or no modification to the walls of the furnace, and possibly increasing the volume throughput of flue gases to account for the greater volume of flue products for the low and intermediate energy gases over higher grade fuels. Depending on the particular low energy gas used, the addition of recuperators for fuel air preheat may be necessary to attain the necessary furnace temperatures. This will primarily be a problem with the low energy fuels (150 Btu/scf) from air-blown producers; the intermediate energy fuels should not be significantly different from natural gas in this respect. Those processes considered to be in Group I are

Sintering (primary metals industry)
Pelletizing (primary metals industry)
Incinerators (all industries)
Afterburners (all industries)
Various kilns (ceramics industry, lumber industry)
Reheat furnaces (primary metals industry)
Reverberatory furnaces (primary metals industry)
Soaking pits (iron and steel industry)
Air preheating (iron and steel industry)
Open hearth furnaces (iron and steel industry)
Calcining (cement, lime, aluminum industries)
Heat treating where finish is not important (primary metals, ceramic industries)
Forging furnaces (iron and steel industries)
Direct-fired atmosphere generators (primary metals, ceramics industri
Smelting operations (nonferrous metals industry).

- Group II. This group includes processes that may be attractive for retrofit to low or intermediate energy gas but where more extensive considerations are necessary. These considerations may include more extensive R&D work to develop suitable burners than for those processes in Group I, or they might also involve substantially more process modification or derating. Processes included are

  Direct firing on finished products (ceramics, primary metals industr
  Indirect fired furnaces with pull-through radiant burners
  Glass tanks (glass industry)
  Finish annealing operations (primary metals industry)
  Processes using flat flame burners (ceramics, primary metals industr
  Processes using partial premix burners
  Blast furnace injection (iron and steel industry)
  Paper and print drying (pulp and paper industry).

- Group III. Processes that are felt to be relatively unattractive for retrofit to low or intermediate energy gas. Generally, these processes are felt to be sufficiently unattractive for retrofit that they should either be allowed to continue on the fuels they are presently using or be replaced with new processes. In general,

they represent relatively small energy requirements compared with other processes in most industries. These include

- Processes using flow-through radiant burners (ceramic or metallic grid) (all industries)
- Automated flame heating systems such as soldering, brazing, and lamp sealing (glass, pottery, special metals)
- Glass and ceramic fiber production (glass industry)
- Glass cutting, scarfing, and annealing (glass industry)
- Direct-fired or indirect-fired space heaters (all industries).

IV-3. Utilization of Gas From Coal in Industrial Boilers

Industrial boilers represent an important potential for utilization of low and intermediate energy gas and, because they are a class of process in themselves and are used in some way in almost every industrial plant, they are treated separately in this study. In 1968, nearly half the energy input to the industrial sector was used for raising steam, either for process use or for on-site generation of electricity.[18] Of this, around 80 percent was in the form of natural gas and petroleum products.

Industrial boilers fall into two broad categories--fire-tube and watertube. As the name implies in a fire-tube boiler, the combustion and gas flow takes place inside the boiler tubing or heat exchanger and steam is raised by water contacting the outside of the tubing. Because the pressure of the steam must be contained by the shell of the boiler vessel they are limited to smaller sizes and lower steam pressures. Sizes are generally given in boiler horsepower and range from around 10 to 20 horsepower to around 600 to 800 horsepower (1 boiler horsepower equals 34.5 pounds of steam per hour at 212 F). Maximum steam pressures range up to about 300 psi. These boilers are nearly always sold in complete packages and as such are quite compact. The vast majority of fire-tube boilers burn natural gas, oil, or by-product gases and liquid fuels.

In watertube boilers, steam is raised by passing water through the tubing or heat exchanger, with combustion and gas flow taking place outside of the tubing. This type of boiler is suited to larger sizes and higher pressures. Sizes generally start at around 10,000 lb steam/hr (4530 kg steam/hr) and range

up to large utility boilers of over 1,000,000 lb steam/hr. For industrial purposes, boilers seldom exceed 500,000 lb (226,500 kg steam/hr). Up to about 250,000 lb steam/hr (113,250 kg steam/hr), watertube boilers can be shop assembled and shipped as a packaged unit. Above that capacity, boilers must be erected in the field either from scratch or from prefabricated parts. About 85 percent[19] of the installed capacity of industrial boilers is in the range below 250,000 lb steam/hr (113,250 kg steam/hr), and of all industrial watertube boilers up to 500,000 lb steam/hr (226,500 kg steam/hr), it is estimated that 78 percent[19] of the installed capacity is in natural gas or oil. The steam pressures of industrial watertube boilers vary considerably and may range from several hundred psi to over 2000 psi (1380 N/m^2).

Considering the distribution of fire-tube and watertube boilers in industry, fire-tube boilers are most prominent below about 16,000 lb steam/hr (7250 kg steam/hr), accounting for an estimated 78 percent of total sales.[19] From 16,000 to 100,000 lb steam/hr (45,300 kg steam/hr), watertube boilers account for an estimated 79 percent of sales, and above 100,000 lb steam/hr essentially all boilers are of watertube construction.

As an industrial process, boilers are considered an attractive retrofit application for low or intermediate energy gas. This would include both fire-tube and watertube boilers whether shop erected or field erected.

In the analysis of the preceding section, industrial boilers would be classed in Group I, as a process requiring a minimal amount of modification for retrofit and as sustaining only minimal derating, if any. The characteristics of boilers that relate to their relative ease of retrofit are similar to those for industrial processes in general, as outlined in the previous section.

The effect of conversion of boilers to low or intermediate energy gas will depend a great deal on the development of suitable burners as for other processes. Also, like other processes, the increased volume of flue gas products will result in higher pressure drops through heat exchanges and exhaust flues. This is not felt to be a severe problem, however, and can be compensated for by removing tubes in the convective heat exchanger or by increasing the load on the induced draft and forced draft fans.

Package boilers, for which a premium is placed on compactness and minimal combustion volume, will generally require more careful design considerations and judicious choice of burners than more generously sized field erected

units. In these cases, retrofit to intermediate energy gas (300 Btu/scf/ 2664 kcal/m^3) should present little difficulty, but with lower energy fuels--below 150 Btu/scf (1332 kcal/m^3)--more difficulty will be encountered and some derating may be necessary. This will depend extensively on burner design, however.

Though up to this point discussion has been primarily directed at oil- and gas-fired boilers, there may be impetus to convert existing coal-fired units to low or intermediate energy gas to avoid the high cost of installing stack gas cleanup systems to meet environmental regulations. Boilers originally designed for coal or other solid fuels inherently have more generous combustion volumes and wider tube spacings in the convective heat exchangers. Both of these characteristics are attractive in retrofitting to low or intermediate energy gas, and there should be little difficulty in achieving comparable heat release to that of the original fuel.

The vast majority of industrial coal-fired boilers under 200,000 lb steam/hr (90,600 kg steam/hr), are stoker fired, however. Unless these units have the capability of also firing gas or oil, there may be no provision for the installation of burners in the furnace walls. In these cases the furnace walls would have to be modified to accept low or intermediate Btu gas burners.

Another problem affecting the conversion of boilers designed for solid fuels such as coal to gaseous fuels is the possible upset in heat transfer balances as a result of the differences in the luminosity of gas flames from those of solid fuels like coal. In boilers with water wall construction, the wall tubes receive heat primarily by radiation from the flame. When superheaters are used they generally consist of banks of tubes through which the hot flue products flow, with the primary heat transfer mechanism by convection. The lower liminosity of the gaseous flame compared with that of coal or other solid fuels would result in less radiant heat transfer and the higher volume of flue products with low or intermediate energy gas would result in greater convective heat transfer. This may result in higher superheat temperatures than the boiler and its associated process load was designed for, hence, desuperheaters might be required.

IV-4. Retrofit of Gas Turbines to Low- or Intermediate-Energy Gas From Coal

Direct-fired gas turbines are frequently used for generating electricity when coupled to an electrical generator or possibly for driving a large piece of machinery. Gas turbines used in industry are of two basic types, aircraft and industrial. Aircraft turbines, as the name implies, are very similar to engines used to power aircraft and tend to be of a very compact design generally requiring a higher grade of fuel such as natural gas, kerosene, or No. 2 distillate oil. Industrial-type gas turbines, however, tend to be more rugged and generously sized for a particular output and can generally handle lower grades of fuel than aircraft turbines. In retrofitting from high energy gaseous or liquid fuels such as natural gas and oil to lower energy gases from coal, aircraft turbines would tend to be affected more severely than industrial-type turbines, though in general each should experience the same kinds of problems.

In firing a lower energy gas from coal into an existing gas turbine, the gas first should be as free of particulates and sulfur as possible to prevent erosion and corrosion of blade surfaces. Generally, the degree of cleanliness offered by the cleanup systems in Table B-1 should provide for sufficiently clean gas, though no long-term test data are available to verify this. Another severe requirement on the gas is that it be available at the turbine pressure, which usually runs somewhere between 100 and 200 psig. Of the gasifiers discussed, only the Lurgi gasifier supplies gas at a higher pressure; the other three gasifiers would require compression of the gas after gasification. With 300 Btu/scf (2670 kcal/m^3) gas from oxygen-blown gasifiers, about three times the volume of gas would have to be compressed as natural gas, and with air-blown gasifiers nearly six times the volume is involved. This will require additional compression capacities for the fuel lines, and the increased fuel volumes will also require larger gas manifolds inside as well as outside the turbine.

Simple modification of the combustors may be sufficient to handle the lower energy gases, especially with 300 Btu/scf gas from oxygen-blown producers in industrial-type turbines. With gases lower than 200 Btu/scf (1776 kcal/m^3), however, new combustors may be necessary, especially in compact aircraft-type

turbines; however, no serious problems would be expected until the gas heating value drops below 150 Btu/scf (1332 kcal/m^3).* At this point potential derating of the unit may be necessary due to a lack of sufficient combustion volume or inability of the turbine to handle the increased volume of combustion products.

Other adjustments may also be necessary to balance turbine-compressor loadings for the new fuel. These adjustments will be more severe with low energy (150 Btu/scf, 1332 kcal/m^3) gas than with intermediate energy gas due to lower volume of combustion products. In aircraft-type turbines, balancing of compressor load with turbine load is somewhat difficult, as part of the turbine frequently is coupled directly to the compressor. In these cases, a new turbine rotor may be necessary to obtain proper operating balance. Industrial turbines in many cases will have inlet guide vanes for adjusting compressor loading.

Overall, gas turbines would be rated as attractive for retrofit to low or intermediate energy gas from coal providing the required gas pressure and cleanliness are achieved. No real problem is foreseen in converting to intermediate energy gas at 300 Btu/scf (1664 kcal/m^3) for either industrial or aircraft-type turbines. Converting to lower energy gas, especially below 150 Btu/scf (1332 kcal/m^3), may pose more serious problems with combustion and balancing of turbine and compressor performance, in which case derating may be necessary.

*Battelle estimate.

SECTION V

ANALYSIS OF POTENTIAL MAJOR INDUSTRIAL USERS OF LOW AND INTERMEDIATE ENERGY GAS FROM COAL

V. ANALYSIS OF POTENTIAL MAJOR INDUSTRIAL USERS OF LOW AND INTERMEDIATE ENERGY GAS FROM COAL

The criteria set up in Section IV-1 can be used in evaluating the relative ease of retrofitting a process to low or intermediate energy gas based on the general characteristics of the process. The following is a general analysis of processes in the four major energy consuming industries in the United States in 1971 according to the 1971 Census of Manufacturers[1]. They are the chemical and allied product industry (SIC 28), the primary metals industry (SIC 33), the petroleum and coal products industry (SIC 29), and the stone-clay-glass products industry (SIC 32).

These four industries account for approximately 63 percent[1] of total energy use in all industries, excluding utilities, and account for 65 percent of the consumption of oil and natural gas in industry.

V-1. Chemical and Allied Products Industry (SIC 28)

Of all basic industries, the chemical and allied products industry is the largest single consumer of energy. The industry is broken down into eight categories shown in Table 6 along with the amounts of energy used in different forms in 1971.

In general, the chemical industry can be characterized by a large number of specialized plants producing a wide variety of products. As can be seen from Table 8, the bulk of the industry energy use (over 70 percent) is consumed in the industrial chemicals sector (SIC 281). This sector produces alkalines and chlorine (SIC 2812), industrial gases (SIC 2813), cyclic intermediates and crudes from coal tar (SIC 2815), inorganic pigments (SIC 2816), and various organic chemicals (SIC 2818) including noncyclic organic chemicals, solvents, polyhedric alcohols, synthetic perfumes, and plasticizers. Also included are various inorganic chemicals (SIC 2819) including inorganic salts of sodium, potassium, and aluminum, ammonia compounds, fertilizer materials, and rare earth metal salts.

The next largest energy consuming sector is plastics materials and synthetics (SIC 282). This sector includes plastics materials and resins

TABLE 6. ENERGY CONSUMPTION IN CHEMICALS AND ALLIED PRODUCTS INDUSTRY[1] (10^{12} Btu/year) (1971)

SIC	Description	Oil	Gas	Coal	Total[a]
28	Chemical and allied products	206.3	1472.7	476.4	2436.8
281	Industrial chemicals	96.3	1157.9	268.8	1719.3
282	Plastics materials and synthetics	59.9	158.9	165.1	404.8
283	Drugs	22.0	17.5	9.4	56.9
284	Soap, cleaners, toilet goods	8.7	21.3	4.9	48.4
2851	Paints and allied products	1.9	6.4	0.3	17.3
2861	Gum and wood chemicals	2.5	5.4	--	9.2
287	Agricultural chemicals	3.5	57.8	2.6	71.9
289	Miscellaneous	11.5	48.2	24.1	108.1

(a) Includes other energy sources besides those listed.

(SIC 2821), synthetic rubber (SIC 2822), cellulosic man-made fibers (SIC 2823), and organic noncellulosic fibers (SIC 2824). The other six industry sectors are relatively small energy consumers and combined account for around 12 percent of the industry energy consumption.

The different types of energy-consuming processes in the chemical industry are as varied as the products. Basically, however, chemicals are generally either made at high temperatures or temperatures below ambient, and energy is necessary to fire heat exchangers or furnaces for fluid heating or for cooling with refrigeration.

Fossil fuels can be used directly or are commonly used to raise low-pressure steam, which is then used for a variety of heating and process needs. Refrigeration can be supplied by either gas or oil-fired absorption machines, or steam or electric driven compressor units.

The bulk of fossil fuel energy in a chemical plant goes for either steam raising in a boiler or for firing furnaces. Figures giving the relative amounts of various fuels used in different processes are not generally available. The applicability of low and intermediate energy gas to industrial boilers was discussed in the previous section and that discussion would apply to boilers in the chemical industry. The use of low or intermediate energy gas in furnaces used for heating chemical feeds will depend on the design of the furnace, but in general should follow the criteria listed in Section IV-1. A great many furnaces will have tube-type heat exchangers fired externally with the chemical feed inside the tube in much the same manner as watertube boilers[19], which should be readily adaptable to either low or intermediate energy gas. Other applications with indirect firing, or where special flame shapes or luminosity are required, will demand more careful consideration.

Due to the wide variety of chemical plants and processes it is difficult to assess the potential for utilization of low or intermediate energy gas to the industry as a whole. Many chemical plants are very small, employing 20 people or less, and other plants are much larger, employing several hundred or possibly more. Also, many plants tend to run continuously for long periods of time, putting strenuous requirements on the dependability of a gasification system.

In conclusion, utilization of low or intermediate energy gas in the chemical industry would be best evaluated on an individual plant basis. Particular attention should be paid, however, to those cases where by-products or wastes from the gasification system could be used in the chemical process. Examples are

Sulfuric acid plants (elemental sulfur, SO_2)

Fertilizer or nitric acid plants (ammonia)

Cyclic intermediates and crude production (tars) plants.

V-2. Primary Metals (SIC 33)

According to the Census of Manufacturers[1] the primary metals industry in 1971 ranked second as a consumer of energy among various industries. The primary metals classification is divided into three basic subclassifications:

- Basic iron and steel (SIC 331)
- Ferrous foundries (SIC 332)
- Nonferrous metals (SIC 333).

Basic Iron and Steel

Basic iron and steel consists of the production of basic steel shapes including simple structural shapes, steel wire, plate, and sheet. There are two basic types of mills--primary integrated mills and secondary mills.

Primary integrated mills convert iron ore and coke to pig iron by means of a blast furnace. The pig iron is then made into steel by primarily one of two processes in this country: the basic oxygen furnace (BOF) or the open-hearth furnace. The BOF oxidizes the impurities in molten iron, thus producing steel by direct injection of oxygen. The self-sustaining exothermic reaction requires no additional energy source. The open-hearth process, on the other hand, uses a regenerative reverberatory furnace heated by radiation from a luminous flame to oxidize the iron to steel.

In 1974 nearly twice the amount of steel produced in this country was made in basic oxygen furnaces rather than open-hearth furnaces (64 million tons versus 35.2 million tons[20]). The basic oxygen process has been slowly

phasing out the open hearth in integrated mills and this trend is expected to continue, as no new open hearths have been installed in many years nor are any new ones planned.

Secondary mills are similar to integrated mills except they don't have the capability of making their own iron from iron ore and coke, but rather receive the cold, raw iron from other plants. Since the iron in a secondary mill is not received in a molten state the basic oxygen process is not as attractive as the open hearth. The open hearth, however, is being challenged in secondary mills by the electric arc process, which is becoming a common choice whenever additional melting capacity is needed. The electric arc process uses an electric current to melt the cold iron charge for conversion to steel.

The iron-making process provides two valuable sources of by-product gaseous fuels for integrated mills. The coking operation converts coal suitable for iron making to coke by processing in a battery of coke ovens. The resulting off-gas (coke oven gas) is similar to intermediate energy gas from coal with slightly higher heating value of 550 Btu/scf (4884 kcal/m^3). In the blast furnace coke is burned with iron ore to produce iron, and the resulting off-gas (blast furnace top gas) is similar to a low energy gas with a lower heating value of around 90 Btu/scf (800 kcal/m^3).

Both coke oven gas and blast furnace top gas are used extensively in most processes in an integrated steel mill, though natural gas and other purchased fuels are necessary as a supplement. In some mills, all gases--coke oven gas, blast furnace gas, and natural gas--are mixed to form a single gas of generally about 700 Btu/scf (6216 kcal/m^3), which is then used throughout the plant. Other mills, however, will keep these various gases separate, each one being intended for use in specific processes. In analyzing the retrofit of an integrated steel plant to low or intermediate energy gas, this aspect should be taken into consideration.

After the pig iron has been converted to steel by one of the four basic steel-making processes--basic oxygen furnace, open hearth, electric arc, or Bessemer converter (accounts for very small amount of steel production)--the molten metal is cast into ingots. The ingots are then heated in soaking pits prior to being forged, drawn, or extruded into desired shapes. Besides these

basic "working" operations, other processes carried out in integrated and secondary mills include annealing, tempering, and normalizing operations for providing proper stress levels and grain structures in the metal and various coating operations such as galvanizing, tin and terneplating and coating with organic chemicals such as paints, varnishes, enamels, and lacquers.

Table 7 gives estimates of total energy use and the amount of energy supplied by natural gas to various processes in iron and steel production in 1971[21]. The amount of energy supplied by natural gas can be used to estimate the potential substitution of gas from coal.

- Sintering and pelletizing operations are for beneficiating the iron ore prior to charging in the blast furnace. The fuel gas requirement is primarily for ignition of the ore prior to the sintering or pelletizing operation.
- Coke ovens are fired primarily by coke oven gas, though estimates show that some of the energy is supplied by natural gas.
- Blast furnace injection involves injection of oil or a reducing gas, such as natural gas, into the blast furnace to reduce the coke requirement for a given amount of iron ore. If low or intermediate Btu gas were used it would have to be at a pressure of about 35 psi, a temperature of around 2600 F, and would have to be relatively free of CO_2 and water vapor to minimize endothermic effects[25].
- Open-hearth furnaces used low energy gas from coal for fuel over 50 years ago, though natural gas and oil are the primary fuels today. Coal or tar is usually injected with the primary fuel to give luminosity to the flame.
- Air preheaters are used to preheat air prior to firing in the blast furnace. Blast furnace top gas is most frequently used since it is readily available. Approximately 10 percent of this energy is supplied by natural gas, however.
- Scrap steel is usually preheated and charged to any of the four basic steel-making processes along with the iron. Preheating is usually done in direct gas-fired reverberatory furnaces and serves to minimize melt times.

TABLE 7. ENERGY USE IN BASIC IRON AND STEEL IN 1971

All figures adjusted to 1971 production of steel.

Process	Total Energy	Natural Gas,[a] 10^{12} Btu/year	Retrofit Group
Basic iron and steel (SIC 331)	1350	691.8	--
Sintering	6.3	0.63	1
Pelletizing	3.2	3.2	1
Coke oven underfiring	185	1.6	1
Blast furnace injection	49.6	23.4	2
Open hearth firing	153	56.5	1
Air preheating	183	18.3	1
Scrap preheating	(b)	(b)	1
Working and heat treating	550	291	--
Soaking pits	176	93	1
Reheat furnaces	267	141	1
Annealing, tempering, normalizing	107	57	2
Coating and finishing	7.6	3.8	--
Galvanizing	4.1	2.0	1
Tin and terne plate	0.07	0.04	1
Prepainted steel stock	0.26	0.13	2
Other	0.46	0.23	2

(a) Estimated amount of purchased natural gas used using Reference 30.

(b) Not available.

- The working and heat treating operations have already been discussed to some degree. The cast ingot starts in the soaking pits where it is heated for primary forging operations. During the working processes the metal may have to be reheated in reheat furnaces several times to relieve stresses and allow further shaping. Finally, annealing, normalizing, and tempering operations (controlled heating and cooling) are used to provide the desired mechanical properties of the metal.
- Many coating and finishing operations are done electrolytically and as such require little or no energy other than electricity. The operations listed either use hot baths or molten coating material or require drying or curing of the coating after application.

As of 1969 there were 49 integrated steel mills in the United States with a total of 178 blast furnaces[29]. The largest complex of blast furnaces is at U.S. Steel in Gary, Indiana, with 12 furnaces. Secondary plants are more numerous than integrated plants, but are generally smaller and more specialized. In 1969 there were 100 secondary plants in the United States with a total of 408 melting furnaces. The largest of these, Cameron Iron Works in Houston, Texas, has 19 melting furnaces.

Ferrous Foundries (SIC 332)

The ferrous foundry industry produces steel castings and iron castings of gray, malleable, and ductile grades. Ferrous charges are melted in a variety of fuel-fired furnaces and electric furnaces. Fuel-fired furnaces include cupolas (coke fired), open hearths (gas and oil fired), air furnaces (pulverized coal fired), and reverberatory furnaces (gas and oil fired). Electric furnaces include electric arc and electric induction. Table 8 gives relative numbers and installed capacities of the various types of melting furnaces in 1965. Because total steel and iron production has not changed significantly since 1965, these figures should still be relatively accurate.

TABLE 8. MELTING FURNACES IN THE FERROUS FOUNDRY INDUSTRY IN 1965[25]

Furnace	Number	Total Capacity, tons/charge
Cupolas	2275	22,822
Open hearths	75	3,506
Air furnaces	117	3,337
Electric arc	1121	3,426
Electric induction	2273	1,709

The two primary uses of energy in ferrous foundries are for melting and heat treating. Table 9 gives a breakdown of the amounts of various fuels used for these two operations in 1964. Though these figures are relatively old, the various proportions should be relatively unchanged. About 80 percent of the energy use in the ferrous foundry industry is for melting and 10 percent is used in heat treating operations. The remainder is used for a variety of operations including mold and core preparation, ladle heating and drying, and heating makeup air.

TABLE 9. ENERGY USE IN THE FERROUS FOUNDRY INDUSTRY (10^{12} Btu/year) (1964)[21]

Process	Gas	Oil	Electricity	Coal	Coke	Total
Gray and ductile iron						
Melting	8.2	--	1.6	--	55.0	64.8
Heat treating	1.9	--	--	--	--	1.9
Malleable iron						
Melting	0.17	--	0.7	7.8	1.6	10.2
Heat treating	1.8	--	0.2	1.8	--	3.8
Steel						
Melting	4.0	4.0	4.2	--	--	12.2
Heat treating	5.7	--	--	--	--	5.7

Open-hearth and reverberatory melting furnaces represent the most significant potential use of low or intermediate energy gas in the ferrous foundry industry. Both should be relatively easy to convert and would be classed under Group I in the analysis of Section IV-1.

The majority of heat treating operations in the foundry are direct-fired applications where surface finish of the casting is not critical. These applications should also be relatively easy to retrofit to low or intermediate energy gas and as such would also be placed in Group I. In some heat treating operations, however, surface finish is important and protective atmospheres are necessary requiring either very close combustion control or indirect firing with radiant tubes. In either case, retrofit would probably require greater consideration and modification than for more easily converted processes, hence these processes were placed in a Group II classification.

Primary Nonferrous Metals (SIC 333)

The nonferrous metals industry consists chiefly of the manufacture of aluminum, copper, lead, and zinc. Other metals included in this classification are

Antimony
Cadmium
Cobalt
Manganese
Molybdenum
Nickel
Tin
Titanium
Tungsten
Various ferroalloys.

Table 10 gives energy requirements of the various segments of the nonferrous metals industry by standard industrial classification for different fuels.

TABLE 10. ENERGY REQUIREMENTS OF THE PRIMARY NONFERROUS METALS INDUSTRY (10^{12} Btu/year)[1] (1971)

SIC	Industry Group	Oil	Natural Gas	Coal	Total[a]
333	Primary nonferrous metals	16.1	205.4	37.8	277.2
3331	Primary copper	14.0	45.0	4.7	66.8
3332	Primary lead	0.1	4.5	1.8	13.3
3333	Primary zinc	--	20.8	15.4	42.3
3334	Primary aluminum	1.0	124.7	15.7	142.9
3339	Nonferrous (n.e.c.)	0.9	10.3	0.1	11.9

(a) Includes other energy sources than those shown.

Copper is smelted from sulfides such as chalcocite and chalcopyrite. The resulting metal is then used for a variety of products, the major ones being copper wire, brass, and bronze. Table 11 shows the various major fossil fuel energy-consuming processes in the making of copper along with the estimated energy usage in 1971. Also shown is the estimated usage of natural gas in these processes, which serves to indicate the potential substitution of low or intermediate energy gas from coal. Other major fuels used are coal, oil, and electricity.

The smelting operation is by far the largest single energy consuming process in copper production. The raw ore in many cases may be roasted or sintered prior to smelting. Smelting is usually done in large reverberatory furnaces, producing "blister copper" which is 98 percent pure copper. Both the roasting and smelting operations use predominantly natural gas as an energy source and by the analysis of Section IV-1 should be relatively easy to convert to low or intermediate energy gas from coal.

Blister copper is then refined in basically one of two ways: fire refining in barrel-shaped or reverberatory furnaces or electrolytic refining if greater purity is required.

TABLE 11. PROCESS ENERGY REQUIREMENTS FOR COPPER MANUFACTURE IN 1971[21][a]

	Total Energy, 10^{12} Btu/year	Natural Gas, percent	Ease of Retrofit[b]
Primary copper (SIC 3331)	66.8	75	--
Roasting concentrates	2	90	1
Primary smelting	24	90	1
Secondary smelting	2	90	1
Fire refining	5	90	1
Melting cathodes	6	90	1
Hot working, wire	3	80	2
Hot working, brass	4	80	2
Melting, brass	3	60	1
Foundry melting	4	95	1

(a) Figures from reference adjusted to 1971 production of copper as listed in 1971 Minerals Yearbook.

(b) See Section IV-1.

The fire refining process should be relatively easy to convert to lower energy gases. The blister copper is melted in the furnace to oxidize impurities, and then the oxygen is reduced to around 0.1 percent by thrusting poles of green wood into the bath. The initial steps in electrolytic refining are essentially the same as the fire refining process. Once the oxygen has been reduced to 0.1 percent, the carbon is cast into anodes and placed in an aqueous bath where, with an electric current, pure copper is collected on the cathode. The melting of the cathodes represents another potential area for substitution of low or intermediate energy gas, as this process usually takes place in gas or oil-fired furnaces.

Most of the refined copper (60 percent)[21] goes to wire mills for copper wire. Primary energy uses in wire mills are heating the copper bars to around 1600 F (870 C) in direct gas-fired furnaces prior to rolling and annealing of the wire after final drawing in radiant tube furnaces with cracked ammonia atmosphere. The direct-fired preheating would be considered relatively easy to convert to lower energy fuels, but the annealing operations would be considered more difficult. About 1.5×10^6 Btu/ton (0.43 kcal/metric ton) of copper are required for preheating and about 0.6×10^6 Btu/ton (0.17 kcal/metric ton) are required for annealing.

Most of the remaining copper goes for the production of brass and bronze. Areas of energy consumption are in melting brass or bronze prior to casting and in subsequent annealing operations. Melting operations are done in gas or oil-fired reverberatory furnaces or electric furnaces. In 1965[21] about one-third of the copper used in this manner was melted in reverberatory furnaces which predominate in older mills. These furnaces should be adaptable to lower energy fuels. Annealing operations are often carried out in indirect-fired radiant tube furnaces and as such would be more difficult to convert to lower energy fuels as was pointed out in Section IV-1.

Lead bullion (97 percent pure) is recovered from galena and other minerals. The ore is mixed with coke fines and roasted in a Dwight Lloyd sintering machine, then crushed, mixed with coke, and charged to a blast furnace. The result is lead bullion which is then refined by oxidizing impurities in a reverberatory furnace. About 50 percent of secondary or recovered lead is refined in the same way as lead ores.

Table 12 gives estimated energy requirements for various processes in lead production. Both sinter ignition and refining should be amenable to conversion to lower energy gases from coal.

TABLE 12. PROCESS ENERGY REQUIREMENTS FOR LEAD MANUFACTURE IN 1971[21][a]

	Total Energy, 10^{12} Btu/year	Natural Gas, percent	Ease of Retrofit[b]
Primary lead (SIC 3332)	13.3	34	--
Sinter ignition	0.7	40	1
Primary refining	3.4	90	1
Secondary refining	3.8	90	1

(a) Figures from reference 30 adjusted to 1971 production of lead as listed in 1971 Minerals Yearbook.

(b) See Section IV-1.

Primary zinc ("slab zinc") is made from sphalerite (ZnS), which is 67 percent zinc. The zinc ore is first oxidized by roasting, then mixed with coke and reduced to zinc with carbon monoxide in sealed, heated retorts. Prior to charging in the retort, the ore is sintered in a Dwight Lloyd sintering machine.

There are basically three types of retort in use:

Vertical retort

Belgian retort

Electrolytic retort.

The electrolytic retort requires only electric energy, though there is a subsequent requirement for gas or oil in melting zinc cathodes from the electrolytic cell.

Both the Belgian and vertical retort method require gas or oil heat. The Belgian process involves heating zinc oxide sinter with a carbonaceous reducing agent in cylindrical retorts and condensing the zinc vapor emitted from one end. For heating purposes, about 60 x 10^6 Btu/ton[21] zinc is required in the Belgian retort in natural gas. The vertical retort process is continuous

and consists of charging "coked bricks" of concentrate into a vertical cylinder. The process requires about 18 x 10^6 Btu/ton zinc (4.98 x 10^6 kcal/metric ton).[21]

The molten zinc from the retort is then refined in a reverberatory furnace requiring an additional 3 x 10^6 Btu/ton zinc (0.83 x 10^6 kcal/metric ton).[21] Table 13 gives process energy requirements for zinc production. Essentially, all the processes shown should be relatively easy to convert to low or intermediate energy gas from coal.

TABLE 13. PROCESS ENERGY REQUIREMENTS IN ZINC MANUFACTURE IN 1971[21][a]

	Total Energy, 10^{12} Btu/year	Natural Gas, percent	Ease of Retrofit[b]
Primary zinc (SIC 3333)	42.3	25	--
Roasting concentrates	0.9	90	1
Sinter agglomeration	0.7	45	1
Smelting (retorting)	27.7	85	1
Melting cathode zinc	0.5	90	1
Refining	2.8	90	1

(a) Figures from Reference 30 adjusted to 1971 production of zinc as listed in 1971 Minerals Yearbook.

(b) See Section IV-1.

Aluminum is made from alumina, which in turn is derived from bauxite. Alumina is separated out of bauxite almost universally by the Bayer process involving the digestion of bauxite in a pressurized hot caustic soda solution. In the process, alumina (Al_2O_3) is converted to soluble AlO_2Na and subsequently is separated from the insoluble impurities--"red muds". Alumina trihydrate is then precipitated out of solution and converted to anhydrous alumina by calcination in a rotary kiln at around 2200 F (1450 C). Except for calcining, energy for the Bayer process is supplied from turbogenerators in the form of

electricity and 110 psi (760 N/m^2) exhaust steam generated by 950 psi (6500 N/m^2) boilers. The rotary kilns for calcining are usually gas fired and require approximately 10×10^6 Btu/net ton (2.77×10^6 kcal/metric ton) of alumina.

In the United States the method used for purifying alumina is primarily the Hall Heroult electrolytic process. The primary fossil-fuel energy requirement for this process is in the baking of carbon anodes. A great deal of electricity is also necessary (15,000 kw-hr/net ton aluminum)[21] and may be supplied from steam-driven turbogenerators on-site.

Other energy-consuming processes in aluminum manufacture are melting in foundries prior to casting and for various heat treating operations. Melting is usually carried out in various types of reverberatory and crucible-type furnaces, though electric melting is becoming more popular due to the propensity for molten aluminum to absorb hydrogen from fossil fuels. Heat treating processes include homogenizing, annealing, solution heat treating, and artificial aging.

Table 14 gives energy consumption in different processes in aluminum production in 1971, along with the estimated usage of natural gas. Calcining and melting operation should be relatively easy to convert to lower energy gases from coal. Heat treating operations, however, may require more consideration, as surface finish often is important, requiring the use of indirect heating through radiant tube burners or in circulated air furnaces with close temperature control (± 5 to 10 F)[21] (± 3 to 6 C).

V-3. Petroleum and Coal Products Industry (SIC 29)

The petroleum and coal products industry is the third largest energy consumer of the basic industries in the United States. The industry can be broken down into five major areas where relative fossil fuel energy requirements in 1971 are shown in Table 15. Of the five sectors, petroleum refining (SIC 2911) consumes by far the most energy (95 percent of the industry total). The other four sectors are relatively minor consumers, accounting for the remaining 5 percent of the industry consumption.

TABLE 14. PROCESS ENERGY REQUIREMENTS IN ALUMINUM MANUFACTURE IN 1971[21][a]

	Total Energy, 10^{12} Btu/year	Natural Gas, percent	Ease of Retrofit[b]
Primary aluminum (SIC 3334)	142.9	87	--
Calcining	63.0	90	1
Scrap melting	7.0	80	1
Foundry melting	3.8	80	1
Heat treating	5.9	75	2

(a) Figures from Reference 30 adjusted for 1971 production of aluminum as listed in 1971 Minerals Yearbook.

(b) See Section IV-1.

TABLE 15. ENERGY USAGE IN THE PETROLEUM AND COAL PRODUCTS INDUSTRY (SIC 29)[1] (10^{12} Btu/year)

SIC	Description	Oil	Gas	Coal	Total[a]
29	Petroleum and coal products	86.3	1363	9.3	1510
2911	Petroleum refining	71.2	1332	9.0	1440
2951	Paving mixtures and blocks	9.4	10.6	--	36.5
2952	Asphalt felts and coatings	4.4	12.5	0.2	22.5
2992	Lubricating oils and greases	1.0	1.6	0.1	5.1
2999	Petroleum and coal products (n.e.c.)	0.3	6.5	0.1	7.2

(a) Includes sources other than those listed.

The use and disposition of purchased energy in petroleum refining is difficult to quantify, as refineries vary in design and disposition of the various by-product fuels that are inherently generated in petroleum processing.

The major energy-consuming processes in the refining operation, however, are distillation, catalytic cracking, thermal cracking, and steam raising in boilers.

In the distillation process, crude oil is separated into various components such as naptha, gasoline, kerosene, and lubricating oils, leaving heavy residual as the remaining part of the crude feed. The two basic methods of distillation are one-stage pipe stills for long residuums or high percentage of bottoms and two-stage pipe stills for short residuums or low percentage of bottoms.

Prior to entering the still the crude feed is heated to approximately 650 F to 665 F (344 to 352 C) in a pipe-still furnace. This furnace is the major area of fuel use in distillation and usually consists of a refractory-lined steel-jacketed shell with a tube-type heat exchanger through which the crude oil is pumped. The furnace is generally fired with gas or oil in somewhat the same manner a watertube boiler would be fired.

After heating in the furnace, the crude oil is fed into the pipe still, which consists of a tall, vertical cylinder containing numerous bell-cap fractionating trays. The different constituents in the hot crude oil vapor condense out as the vapor passes through the fractionating trays, which are held at the different saturation temperatures of the constituent they are designed to separate. The fractionated liquids are then stripped of steam absorbed in the distillation process, then cooled and sent to storage.

Cracking operations are employed to gain increased yields of gasoline by cracking heavier gas oils (anything from kerosene to heavy distillates) from the distillation still. The thermal cracking process involves heating the heavy feed stock to 900 F to 1000 F (480 to 535 C) under pressures of 250 to 750 psig in a process similar to the pipe still used in distillation. The vapors in the heavier gas-oil feed crack to lighter gasoline fractions and the remainder comes off as tar. Gasoline yields of up to 65 percent* can be obtained with a kerosene feed and as low as 20 percent with a heavy distillate feed[26]. The main fuel requirements are in the heating of the feed stock in furnaces similar to those used for pipe stills.

Thermal cracking has given way to more modern catalytic cracking operations which give higher gasoline yields and octane ratings. In 1959

---

* Fraction with boiling point lower than gasoline.

less than one-third of the cracking in the United States was done in thermal units, with no new units planned, resulting in a much lower fraction of thermal cracking being done today.

Catalytic cracking is composed primarily of three processes--cracking, regeneration, and fractionation. After start-up, a specialized procedure involving auxiliary burners, the cold feedstock is passed through heat exchangers where it picks up heat from tower sidestreams. It is then injected into a hot catalyst stream and on to a reactor which is held at 900 to 975 F and 10 to 12 psig[26]. Once in the reactor the feed oil, in constant contact with catalyst, is cracked into lighter gasoline fractions. Conversions of up to 92 percent[23] have been obtained in commercial practice.

Three basic types of catalyst are usually employed:[23]

- Silica-magnesia, which gives highest yields
- Silica alumina, which gives the highest octane product
- Bentonite clays, which are intermediate in both respects.

Catalysts are continuously regenerated by burning off the carbon deposited from the oil at temperatures normally maintained between 1050 and 1125 F (562 and 610 C) and 10 psig (69 N/m^2).[26] Close temperature control is necessary to prevent catalyst damage. The flue gas resulting from burning off the carbon is normally processed through a cyclone separator and then passed through a waste-heat boiler resulting in significant energy savings for the refinery as a whole. No fuel is usually required for catalytic cracking other than the carbon on the catalyst, though some plants have added gas-fired furnaces for additional capacity.

Naptha reforming is also an important source of higher octane gasoline fuels in petroleum refining. As in the case of cracking of heavy fractions, naptha can be reformed thermally or with catalysis. Since 1949, when catalytic reforming was used for aromatic production, thermal reforming has been rapidly replaced[26]. Catalytic reforming of naptha has superseded catalytic cracking as the principal source of gasoline.

The thermal reforming process is similar to the thermal cracking process. The naptha feed is pumped through a furnace heat exchanger and heated to around 1000 F (535 C) at 500 to 1000 psig (3450 to 6900 N/m^2). The naptha is thus cracked and separated into desired fractions in a rectifying column.

Catalytic reforming (or hydroforming) involves catalytic naptha reforming in the presence of a large volume of hydrogen. The process basically involves the same steps as for catalytic cracking. The naptha feed is heated to around 900 F (480 C) at pressures from 250 to 500 psig (1740 to 3480 N/m^2), depending on the particular process, and is reacted with a catalyst causing the naptha to crack. The cracked naptha is sent to a fractionating column, where various desired constituents are separated. There are various hydroforming processes in use by refineries, though they are basically of two types:

- The platforming process, which uses a fixed-bed catalyst and in which the naptha feed is reheated and rereacted with catalyst several times prior to fractionating. An expensive platinum catalyst is used which needs regenerating only about once every 6 months.
- The fluid hydroforming process, which uses a less expensive fluidized catalyst bed that is continuously regenerated. Only one heating of the naptha feed is necessary, since the continuously circulating hot catalyst bed maintains constant temperatures in the reactor.

There are various other processes in a petroleum refinery that require energy inputs in various forms. These processes include alkylation and isomerization, an important process for making high-grade gasoline and aviation fuel; polymerization, an adjunct to catalytic cracking for producing high-octane gasoline components; various methods of refining and dewaxing lubricating oils; and finishing operations on various fuels such as automotive and aviation gasoline, kerosene, jet fuel, furnace oil, and diesel fuel. The energy requirements for the processes discussed and for some not discussed are given in Table 16 for various energy forms.

Determining the potential for utilization of low or intermediate energy gas from coal in the petroleum industry is difficult. Processes and plant designs are quite varied, making it difficult to determine the disposition of various waste gases inherently produced in refineries that are used as fuel

sources. The three basic demands for energy in refining are for heating feed streams in tube-type furnace heat exchangers, raising steam in boilers, and catalyst regeneration.

TABLE 16. ENERGY REQUIREMENTS OF VARIOUS PETROLEUM REFINING PROCESSES PER BARREL OF FEED[26]

Process Description	Steam, lb	Electricity, kwh	Fuel, Btu
Distillation			
Single-stage still	8	0.30	100,000
Two-stage still	15	0.40	140,000
Thermal cracking	5	7.0	620,000
Catalytic cracking	110	0.35	0
Thermal reforming	70	1.0	300,000
Catalytic reforming	33	0.72	450,000
Polymerization	100	1.0	0
Alkylation	200	4.4	150,000

Both the tube-type furnace heat exchangers and industrial boilers could become significant users of low or intermediate energy gas from coal, and neither should be very difficult to retrofit. Many times in catalyst regeneration, the carbon deposited from the oil being burned off will furnish the bulk of the fuel requirement. Those cases in which additional fuel is necessary could represent a significant potential use of gas from coal, however.

V-4. Stone Clay and Glass Products (SIC 32)

The stone,clay,and glass products industry consists of the manufacture of glass; cement; various structural clay products including brick, ceramic wall and floor tile and clay refractories; pottery and related products; and concrete gypsum and plaster products including concrete block and brick,

ready-mix concrete, lime, and gypsum products. Table 17 gives a breakdown of the fossil fuels used in the manufacture of some of the major energy-consuming products in this industry.

TABLE 17. ENERGY REQUIREMENTS IN THE STONE, CLAY, AND GLASS PRODUCTS INDUSTRY (10^{12} Btu/year) (1971)[1]

SIC	Industrial Segment	Oil	Natural Gas	Coal	Total[a]
32	Stone, clay, and glass products	117.9	726.4	252.4	1219.1
3211	Flat glass	0.4	52.0	3.8	55.9
3221	Glass containers	8.8	119.9	--	130.3
3229	Pressed and blown glass	2.0	56.8	0.1	63.1
3241	Cement	41.9	208.1	178.8	429.3
3251	Brick and structural tile	3.1	59.1	3.1	76.7
326	Pottery and related	1.0	16.0	0.7	23.9
3273	Ready-mix concrete	23.2	5.5	0.1	80.1
3274	Lime	4.1	39.2	47.3	90.0
3275	Gypsum products	5.3	30.5	1.4	38.5

(a) Total includes energy sources other than those shown.

Glass

The glass industry can be divided into three basic sections: flat glass (SIC 3211), glass containers (SIC 3221), and pressed and blown glass (SIC 3229). Glass is made by melting a mixture of silica, soda ash, and limestone, together with cullet (broken glass) in an enclosed refractory-lined hearth-type furnace. The melting operation is by far the largest energy-consuming process in glass manufacture, consuming from 75 to 80 percent of the process energy requirement or 65 to 75 percent of the total energy requirement (assuming 5 to 10 percent nonprocess energy use)[21].

Natural gas is the preferred fuel in glass making, accounting for approximately 90 percent of the energy requirement of the industry (Table 17). Oil and electricity are generally used as standby fuels, with a trend toward increasing use of electricity. The fuel is fired into the furnace through either end or side ports above the surface of the charge in the melting and refining end of the furnace, which is usually separated from the working end by a bridge wall. Good combustion control is necessary in glass melting to maintain the relatively high temperatures and uniform heat release required by the process for maintaining product quality.

When natural gas is used as a fuel, the air is usually preheated by regenerators outside the furnace. If low or intermediate energy gas were used, double-compartmented regenerators may be necessary for preheating both air and fuel. This could create problems in furnaces designed for natural gas, as extensive modification may be necessary to gain sufficient space for the regenerators.

At one time, low energy gas from coal was a common fuel in glass manufacture. However, since natural gas has become the dominant fuel the technology of glass melting has advanced considerably. The required melting area per ton of glass has decreased by nearly a factor of two in the past 20 years[22], largely due to improvements in furnace design and batch formulae, but the availability of high energy fuels such as natural gas also has been an important factor in obtaining more rapid batch melting. This could also be an important factor in switching to lower energy gases.

Other significant areas of energy use in glass manufacture are annealing, tempering, flame polishing, and various heating operations carried on throughout the plants. These operations generally make use of many small burners with a high degree of control and are generally not considered attractive processes for immediate retrofit to low or intermediate energy gas. Table 18 gives estimated energy requirements for melting as well as annealing and other processes in the manufacture of glass.

Cement

The making of Portland cement requires the combination of two basic types of materials: those primarily containing calcium and those containing

silica alumina and iron. The calcium-bearing material is most commonly limestone but may be marble, marl, or waste sludge from lime plants. The three other constituents are generally derived from argillaceous materials such as clay, shale, or bauxite[24].

TABLE 18. PROCESS ENERGY REQUIREMENTS IN GLASS MANUFACTURE IN 1971[1]

	Total Energy, 10^{12} Btu/year	Ease of Retrofit[b]
Flat glass (SIC 3211)	55.9	--
(a) Melting	38.8	2
(a) Annealing	3.9	3
(a) Other	13.2	3
Glass containers (SIC 3221)	130.3	--
(a) Melting	107.7	2
(a) Annealing	11.1	3
(a) Other	11.5	3
Pressed and blown glass (SIC 3229)	63.1	--
(a) Melting	52.8	2
(a) Annealing	3.5	3
(a) Other	6.8	3

(a) Process energy requirements based on 1971 energy consumption[1] using proportions of Reference (21).

(b) See Section IV-1.

The raw materials are blended in the proper proportion and ground to a fine consist in one of two manners, depending on the type of process. The wet process is used generally where the raw materials already contain

significant moisture, and additional water generally is added to form a fine slurry during the grinding operation. In the dry process, the raw materials are blended and dried prior to grinding to a fine powder.

Once ground, the raw materials are fed to long rotary kilns where, under extreme heat up to 3000 F[24] (1660 C), they are transformed to round, marble-sized, glass-hard balls called "clinker". This clinker is actually Portland cement which undergoes finish grinding to the fine powder normally associated with the final product. Once mixed with an aggregate, such as gravel or sand, the cement becomes concrete and sometimes is sold as "ready mix" concrete.

The kiln represents the single major user of fossil fuel energy in cement manufacture. The rotary kiln consists of a long (possibly over 500 feet or 150 meters) refractory-lined steel cylinder sloped at a slight angle of about 1/2 to 3/4 inch per foot length (4.3 to 6.3 cm/m). Gas, oil, or pulverized coal fuel is fired at the lower end of the kiln and the raw materials are fed at the top end. The kiln rotates slowly causing the raw materials to migrate to the lower discharge end, where they are taken off as clinker. The principal difference between the wet and dry process is the water content of the raw material feed. The energy requirement for the wet process is about 40 percent higher than the dry process (1.4 million Btu per barrel of clinker versus 1.0 million Btu per barrel).

The most critical aspect in firing cement kilns is to tailor the flame pattern to maintain the proper burning area in a given section of the kiln. Once the combustion has been balanced, there is generally little problem in maintaining the balance for a given fuel. Changing to lower energy gases from coal, however, would require rebalancing the kiln and may require some testing. Also, lower flame temperatures of some low energy gases from coal could result in a slight reduction in capacity. Rotary kilns, however, should be fairly easy to adapt to low or intermediate energy gas. Since kilns are the only major consumer of fossil fuel energy in cement manufacture, the figures given in Table 17 can be used to estimate the potential for use of low or intermediate energy gas from coal.

Lime

The lime industry is similar to the cement industry in that kilns represent the single major consumer of energy, with relatively small amounts of energy used elsewhere. The kiln is used to calcine limestone ($CaCO_3$) or dolomite ($CaCO_3 \cdot MgCO_3$), resulting in so-called "quicklime" (CaO). Since quicklime is highly perishable, water is generally added producing hydrated or slaked lime ($Ca(OH)_2$).

Three types of kilns are currently in use for calcining limestone.

- By far the greatest amount of limestone is calcined in rotary kilns similar to those used in the cement industry. The same discussion used for cement kilns applies also to rotary-type lime kilns relative to the potential for utilizing low or intermediate energy gas from coal.
- Another common type of kiln in lime production is the vertical type consisting of a vertical lined steel shaft. The shaft is stationary and limestone is fed in at the top through a charging door, where it progresses down through the heating zone and is taken off at the bottom as lime. In shaft-type kilns, only the hot combustion gases pass through the charge and the actual combustion takes place outside the kiln.
- A fairly recent innovation in the lime industry is the rotary-hearth kiln. This type of kiln has a rotating horizontal hearth which is round and may vary in width. Material is fed in at one point on the circumference of the unit and calcined lime is removed at another point as the hearth rotates.

Utilization of low or intermediate energy gas from coal in lime kilns should not present serious difficulty. National Lime and Stone Company in Carey, Ohio, and Glenn Gary Manufacturing in Schumakersville, Pennsylvania, are two lime plants that currently still have gasifiers either in active or standby service. Potential problems of retrofitting rotary kilns are the same as those in the cement industry discussed previously. Retrofitting of

shaft-type kilns should be relatively straightforward since the combustion process takes place outside the kiln itself and, hence, the balancing of the combustion process with the kiln operation would not be as critical as with a rotary kiln.

A typical large lime plant would be capable of producing around 150,000 tons of lime per year (136,000 metric tons/year) at an average energy consumption of around 6 million Btu per ton[22] (1.66 million kcal per metric ton). Assuming operation for 347 days per year, this results in an average energy requirement of 2.6 billion Btu per day (0.66 billion kcal/day), which would require one Lurgi, Winkler, or small Koppers-Totzek unit or two large Wellman-Galusha gasifiers (see Table 3).

Ceramics

The ceramics industry consists of a variety of products including brick, clay refractories, ceramic tile, and various pottery products. The primary uses of energy in this sector are for firing kilns and various baking and drying operations.

The most important segment of the ceramics industry from the standpoint of energy use is brick and structural tile (SIC 3251). Energy requirements for this segment are given in Table 16. The products in this segment include common brick, face brick, and glaze brick. After the raw materials (clay, some crushed minerals, and water) are mixed and set, they are dried in drying rooms or tunnel driers. Heat can be supplied from a variety of sources including direct-fired air heaters, exhaust heat from a tunnel kiln, steam coils, or infrared heaters.

Kilns in this industrial segment generally are of three types: field, beehive, or tunnel kilns. Field kilns use green brick which form firing arches by being stacked in a predetermined pattern, with firing by gas or oil into each arch on a schedule of 5 to 9 days. Beehive kilns are large, circular downdraft kilns gas or oil fired on cycles of 24 to 72 hours. Tunnel kilns are large car-type kilns in which the product is fired continuously. Low or intermediate energy gas from coal should be readily adaptable to most drying and kiln operations in the structural brick and tile industry and in the ceramics industry in general. In many cases, however, the product may require a fine

finish, such as in whiteware and other pottery products, and firing or drying operations will require careful consideration in switching to a low or intermediate energy gas. This is especially true if the sulfur content in the gas is significantly higher than in the fuel being replaced. In general, kiln firing and drying operations on unfinished parts would be considered as Group I under the analysis of Section IV-1, while firing operations on finished parts where high surface finish is required would be considered Group 2 or 3.

SECTION VI

UTILIZATION OF LOW OR INTERMEDIATE ENERGY GAS FROM COAL IN ELECTRIC POWER GENERATION

VI. UTILIZATION OF LOW OR INTERMEDIATE ENERGY GAS FROM COAL IN ELECTRIC POWER GENERATION

Though the thrust of this study is to analyze the potential for utilization of low or intermediate energy gas from coal in the industrial sector, a cursory analysis of its applicability to the utility sector is presented here.

A variety of energy sources are used in the United States for the generation of electric power including fossil fuels, nuclear fuels, hydroelectric energy, and geothermal energy. The total energy input to utilities in 1971 was estimated at 17,563 x 10^{12} Btu (4426 x 10^{12} kcal). Of this amount, fossil fuels (natural gas, oil, and coal) accounted for 14,239 x 10^{12} Btu (3588 x 10^{12} kcal) or 81.5 percent[27] of the total. The relative amounts of energy supplied by the three major fossil fuels in 1971[28] were

Fuel	Percent	Amount
Coal	55	327.9 x 10^6 short tons
Natural gas	29	3993 x 10^9 cubic feet
Oil	16	396.2 x 10^6 barrels.

Fossil fuel generating plants are presently of two general types, steam electric or gas turbine. Steam electric plants use large boilers to generate high-pressure steam which is then used to generate power by expansion in a steam turbine. Gas turbine plants burn the fossil fuel directly in the turbine to generate power.

Fossil-fuel-fired steam electric plants account for the major amount of electrical generation in this country, with 253,819 megawatts of installed capacity. The total combined fossil fuel and nuclear installed capacity is 284,280 megawatts.[28] These plants can be coal, oil, or gas fired, and in many cases they have the capability of firing more than one type of fuel. The boilers themselves are similar in many respects to industrial watertube boilers (discussed in Section IV-2), though in general they are many times larger, somewhat more complicated, and tend to operate at higher pressures. Relative to the retrofit of existing fossil-fueled steam electric plants to low or intermediate energy gas from coal, there are four broad areas of concern.

(1) The operating cycle or load factor (actual power generated divided by the potential power generation based on installed capacity of electrical generating plants) can be generally classified into three areas:

a. Base-load plants operate at load factors of around 70 percent and greater and usually consist of the most efficient, hence largest, units in a power network. An attempt is made to keep these plants operating at peak efficiency or near full capacity as much of the time as possible. These plants tend to be the newest, largest, most sophisticated, and most efficient plants in a power network, and they typically have a steady demand for fuel.

b. Swing-load or mid-range plants operate at load factors from around 20 percent to 70 percent and many times consist of the older or less efficient plants on a power network. As the name implies, the load on these plants varies greatly to compensate for broad variations in power demand. The design of these plants is usually the same as plants used for base-load operation.

c. Peaking plants operate at load factors of 20 percent or less and are used to satisfy the short-term peak demands for power that occur on a daily basis. These plants in some cases may be the oldest or least efficient plants in a power network. Some new plants have been built for this purpose--primarily fired with gas or oil--with the objective of lowest possible investment cost; the result is units of moderate steam pressures and temperatures.

The matching of gasifier output to power-plant demand needs consideration and will probably require control systems not found on current gasification systems. From this standpoint it appears that base-load plants would be most amenable to retrofit, though swing-load plants

with slowly changing load patterns many also be amenable. Peaking plants may operate at full capacity for short periods of time and at other times be almost idle or at very low load. It is important that these plants be able to respond quickly to changes in load, and from this standpoint these plants do not seem readily adaptable to current gasification technology.

(2) Heat transfer in a boiler takes place by primarily two mechanisms. The walls of the boiler receive heat primarily from flame radiation and the amount of heat they receive depends a great deal on the luminosity of the flame. Tube banks usually used to superheat and reheat the steam are placed downstream from the combustion zone and receive heat primarily by convection as the hot flue gases flow through them. The balance between these two types of heat transfer is an important parameter in determining the outlet temperature of the steam. Controlling steam outlet temperatures within a specified range is important, as unnecessarily high temperatures require expensive, high-alloy steam lines with high mechanical properties and low-steam temperatures result in poor turbine efficiency and the potential for condensation in the last turbine stages, which promotes rapid blade erosion. Several methods are used to control steam temperatures out of the superheater, e.g., spraying water into the steam lines at various points in the superheater, using flue-gas dampers to control the amount of superheater tube surface exposed to the hot flue gas, and flue gas recirculation. When switching from fuel with a luminous flame (such as oil or coal) to one with relatively low luminosity (like low energy gas from coal) the ability of the boiler to control the steam temperature out of the superheater is an important consideration. In general, the lower energy gases from coal, due to lower flame luminosities and higher flow rates of combustion products, result in less radiation heat transfer and greater convective heat transfer.

(3) Increased flows of flue-gas products could also create a problem in retrofitting existing power plants to low or intermediate energy gas from coal. As can be seen from Table 5, the volumes of flue gas (stoichiometric mixture) from intermediate energy gas burned in oxygen-blown units would be on the order of 5 to 12 percent greater than those for natural gas, and for low-energy gas burned in air-blown units the volumes would be 30 to 55 percent greater. The ability of the induced and forced draft fans in a unit to handle the increased volume flow of flue gas will be an important factor in the amount of derating a unit may have to undergo in retrofit.

Units originally designed for coal inherently have wider tube spacings and more generous combustion volumes than those designed for gas or oil to allow for slag or ash buildup. It is anticipated that little, if any, derating would result in coal designed units as a result of increased flue gas volume from intermediate or low-energy gas from coal. In more compact units designed for natural gas or oil, however, retrofit to intermediate energy gas (300 Btu/scf) (2670 kcal/m^3) may be possible with little derating, but, in retrofit to low-energy gas (150 Btu/scf) (1335 kcal/m^3) some derating would probably be necessary.

(4) The last point to be considered in retrofitting existing fossil-fuel-steam electric plants (or any power plant, for that matter) to a substitute fuel is dependability. Utilities for many years have placed paramount importance on the dependability of power generating systems. Any gasification plant used to supply fuel to a power plant would have to be capable of very high on-steam reliability either through the use of dependable systems or with many standby units. Unlike a stack gas cleanup system (an alternative to gasification for coal-fired plants), the gasifier cannot easily be bypassed when failure occurs; this characteristic allows the plant to continue in operation while repairs or adjustments are made. A standby natural gas or oil fuel supply, however, may be an attractive supplement to any power plant supplied substantially by a coal gasification plant.

Retrofitting gas turbines to low or intermediate energy gas from coal was discussed in Section IV-4. Gas turbines in utilities are used almost exclusively for peaking service. Frequently, they will be run at full load during the peak demand hours of the day and completely shut off or idled during off hours, which would result in a strenuous demand on any gasification system. Frequently, peaking gas turbine plants are at the same site as larger base-load or swing-load plants and in these cases could use the same gasification facilities as the larger plants, presenting less of a load-following problem for the gasifier. For isolated gas turbine peaking plants, however, as for steam electric peakers, retrofit to coal gasification would require sophisticated controls not yet available in gasification. Gas turbines would also require pressurized gasification of at least 200 psig to be attractive. Currently, only one of the four commercial gasification processes, the Lurgi, operates at such a pressure (20 atmosphere). The Lurgi gasifier is also the most complex and reportedly[6] requires considerable maintenance and downtime--characteristics that are not attractive for power generation.

In summary, the most attractive type of power plant to retrofit to low or intermediate energy gas from coal is a base-load plant originally designed for pulverized coal with a subcritical natural or forced circulation-type boiler. This type of unit is actually quite common and would have the additional attraction of being located close to a source of coal. The least attractive retrofit application would be a plant designed for gas or oil, either steam-electric or gas turbine, performing peaking or low swing-load duty.

SECTION VII

REFERENCES

REFERENCES

(1) 1972 Census of Manufacturers, United States Department of Commerce, Bureau of Census.

(2) The Making, Shaping and Treating of Steel, United States Steel Corporation, 1964.

(3) Gas Production, Lurgi Gesellschaften, 1968.

(4) SASOL Today, The South African Coal Oil and Gas Corporation Limited.

(5) New Fossil-Fueled Power Plant Process Based on Lurgi Pressure Gasification of Coal, Lurgi Gessellschaften, 1970.

(6) Indian Government Sponsored Comparative Study of Commercial Coal Gasification Processes--Koppers-Totzek, Lurgi, and Winkler, reproduced by Koppers, 1969.

(7) Trials of American Coals in Lurgi Pressure Gasification Plant at Westfield, Scotland, Elgin Fifth Synthetic Pipeline Gas Symposium, 1973.

(8) The Production of Gas from Coal Through a Commercially Proven Process, Farnsworth et al., Koppers, 1973.

(9) Technological and Economic Feasibility of Advanced Power Cycles and Methods of Producing Non-Polluting Fuels for Utility Power Stations, Robson, et al., United Aircraft Research Laboratories, 1970.

(10) Personal conversation with Koppers, January 21, 1974.

(11) The Winkler Process for the Production of Low-Btu Gas from Coal, Banchik.

(12) Wellman-Galusha Gas Equipment, McDowell Wellman.

(13) Gasification of Solid Fuels in the Wellman-Galusha Gas Producer, Hamilton, G. M., McDowell Wellman, American Inst. of Mining Met. and Pet. Engineers, 1961.

(14) Sulfur Dioxide Removal From Waste Gases, Slack, A. V., Pollution Control Review, 1971.

(15) Oxygen-Steam Producer Blast, Mitchell, Consolidated Mining and Smelting Company of Canada, 1946.

(16) United States Federal Register, Vol. 36, No. 247, December 23, 1971.

(17) A Survey of R&D Projects Directed Toward the Conversion of Coal to Gaseous and Liquid Fuels, IGT, Chicago, 1971.

(18) Patterns of Energy Usage in the United States, Office of Science and Technology, January, 1972.

(19) Design Trends and Operating Problems in Combustion Modification of Industrial Boilers, D. W. Locklin, H. H. Krause, A. A. Putnam, et al., Battelle Annual Progress Report to U.S. Environmental Protection Agency, Grant No. 802402, 1973.

(20) 1971 Minerals Yearbook, Vol. 1, Metals and Minerals, U.S. Bureau of Mines.

(21) A Study of Process Energy Requirements for U.S. Industries, American Gas Association, 1969.

(22) Study of Costs of Production and Potential Future Markets for Low Btu Industrial Fuel Gas and Industrial Hydrogen, Nelson, Layne, Hein, Battelle Memorial Institute, 1966.

(23) Petroleum Processing, Principles and Applications, Hengstebeck, Standard Oil Company (Indiana), McGraw-Hill, 1959.

(24) The Making of Portland Cement, Portland Cement Association, Chicago, Illinois.

(25) Hot Sulfur Removal From Producer Gas, Schultz, Lewis, 3rd International Conference on Fluidized Bed Combustion, Hueston Woods, 1972.

(26) Petroleum Refining Manual, Noel, Reinhold Publishing, New York, 1959.

(27) United States Energy Through the Year 2000, Dupree, W. G., and West, J. A., U.S. Department of the Interior, 1972.

(28) Steam-Electric Plant Construction Cost and Annual Production Expenses, Twenty-Fourth Annual Supplement, 1971, Federal Power Commission.

(29) A Cost Analysis of Air Pollution Controls in the Integrated Iron & Steel Industry, Barnes, T.M., Battelle Columbus Laboratories, NAPCA Contract PH-22-68-65, 1969.

APPENDIX A

INTERCHANGEABILITY OF FUELS WITH RESPECT TO THE COMBUSTION PROCESS

APPENDIX A

INTERCHANGEABILITY OF FUELS WITH RESPECT TO THE COMBUSTION PROCESS

SUMMARY

This appendix is a study to estimate the substitutability of selected low-energy gases from Table 1 to natural gas using what minimum data is available on their burning characterisitcs. The various fuels were compared on the basis of the critical flashback velocity gradient. The value of the gradient is obtained by firing a Bunsen-type burner in the open and reducing the flow rate until flashback occurs. The gradient is significant in that it is related to the blowoff limit in an enclosed system and the burning velocity of the flame along with other combustion properties associated with flame stability.

Values of the critical flashback velocity gradient were compared on three bases:

(1) The usual case of the gradient alone for stoichiometric conditions and for the air/fuel mixture that maximizes the gradient.

(2) The stoichiometric and maximum values of the gradient times the high heating value of the stoichiometric mixture.

(3) The stoichiometric and maximum values of the gradient times the high heating value of the fuel itself.

The Wobbe number was also calculated and compared for various selected low-energy fuels and natural gas. This parameter is basically the higher heating of the fuel divided by the square root of the fuel specific gravity. It is useful in estimating the substitutability of various fuels in aspiration-type burners and in burners where pressure sensitive controls are employed.

Finally, the adiabatic flame temperature was calculated and compared for each of the gases under consideratio.

CONCLUSIONS

This analysis has shown that there should be no problem with stabilizing medium energy fuels as a substitute for natural gas. In some instances, for low energy fuels, a problem may result. In most cases, the principal problem is the increased pressure drops through both the burners, if the design is unchanged, and through the heat exchanger section. Suitable design changes in the burner can normally be made. In the case of the heat exchanger, removal of some tubes of the heat exchanger with same loss in capacity appears the simplest approach for retrofitting.

Flame radiation might change sufficiently to cause problems both with control instruments and with heat flux balance. In some instances, it might be possible to rectify the problem by changing to a flame type of different luminosity or by preheating.

No consideration has been given to special uses (such as in glass forming, wherein the product gas composition, the flame shape, and the flame temperature must be carefully controlled); in these instances, the details of the installation must be considered carefully.

LIST OF SYMBOLS

D	Characteristic burner diameter
G_{fb}	Critical flashback velocity gradient as calculated by modification of techniques presented in Reference A-2 to be published in an upcoming issue of Combustion & Flame Magazine.
G_{bo}	Blow-off velocity gradient
U	Average flow velocity through the burner
U_{fb}	Average flow velocity at flash back = DG_{fb}
U_{bo}	Average flow velocity at blow off = DG_{bo}
Q	Volume flow rate of combustible mixture
Q_f	Fuel flow rate
Qa	Air flow rate
Hm	Heating value per unit volume of combustible mixture
H_f	Heating value per unit volume of fuel
Ha	Heating value per unit volume of air
N	Number of burners
Δp	Pressure drop across burner
α	Air/fuel ratio relative to stoichiometric air/fuel ratio
ρ	Density of combustible mixture
ρf	Fuel density
ρa	Air density

INTRODUCTION

Low energy gas obtained from various gasification processes has been suggested as a source of clean fuel for usage in utilities, industrial boilers, and industrial processes. One of the problems to be considered in making such a change to low energy gas is its flame stability in a combustion system. This discussion is concerned with these stability problems.

It should be noted that this direction of change is the reverse to that made decades ago; as natural gas became available and the use of various combustible mixtures from coal-gasification processes were phased out. A similar more recent process occurred in England with the development of the North Sea gas supplies. Generally speaking, these fuel changes were accompanied by changes in types of burners. For instance, in the residential area the quiet, soft diffusion flame burners in heating units were replaced by the noisier, harder, but more compact premixed flame burners. Unfortunately, such changes have reinforced a connotation that low energy gas implies large combustor systems. Yet, the real reason is that the low burning velocity of natural gas permits the use of premixed burners that lead to more compact designs in the case of household heating applications. This example clearly shows that each potential conversion must be analyzed in detail in order to draw valid conclusions.

Basically, flames may be either of the premixed flame type, wherein the fuel and air are uniformly mixed before entering the combustion zone, or of the diffusion flame type, wherein the fuel and air are separated until they reach the combustion zone. In the latter case, however, the leading edge of the flame surface is premixed locally; thus, the flame stability is related to premixed flame characteristics. The flames may be either laminar, wherein the rate of mixing (of mass, momentum, and energy) is controlled by the molecular kinetic properties, or turbulent, wherein the rate of mixing is controlled to a significant degree by the turbulence characteristic of the

flowing gases. Most industrial burners have turbulent flames; however, on a local basis, laminar flame characteristics usually control the local phenomena.

Practical burners can combine features of both types of combustion. For instance, many premixed burners use fuel-rich mixtures; secondary air is added to the products of the premix flame to produce a diffusion flame. Nozzle mix burners (for example, a fuel jet surrounded by multiple air jets firing into a burner tile) may show either a diffusion flame or premixed flame, depending on where the flame is stabilized. Thus, it is difficult to single out one feature of a combustible mixture that can be considered to characterize the fuel for comparison purposes, even if the burner is not changed in the process.

If a comparative parameter must be chosen, however, the most easily available pertinent parameter seems to be the flash-back velocity gradient. The value of this parameter is obtained by firing a Bunsen-type burner in the open. The flow rate of the combustible mixture to a laminar flame is slowly reduced until the flame flashes back. The velocity gradient at flash-back in laminar flow is independent of duct sizes over a wide range of sizes and ambient atmospheres. Values are available from one source (A-2)* of information for a wide variety of fuels, and some combination rules have been developed for those fuel mixtures not listed.

The great significance of the flash-back velocity gradient in studies of industrial combustors is that it is related closely to several other significant combustion parameters. For instance, the flash-back velocity gradient is proportional to the blow-off limit in an enclosed system and to the burning velocity of the flame (chemically controlled reaction rate per unit volume), and it is inversely proportional to the ignition delay time mentioned by many investigators. It also has been suggested that it is proportional to the peak frequency of the combustion roar spectrum.

Presentation of Data

Table A-1 presents the information on the composition and higher heating values[A-1] of the various fuels considered in this analysis. Table A-2 presents computed values of the stability limits considered from three points of view:

---

*Superscripts refer to references at end of Appendix A. A list of symbols used in this appendix is presented on page A-3.

TABLE A-1. FUEL COMPOSITION AND THERMAL PROPERTIES

Gasifier	Gasifying Medium	Fuel Composition, percent					HHV, Btu/scf Fuel	Btu/scf Stoichiometric Mixture	Adiabatic[a] Flame Temperature, F
		N_2	CO_2	CO	H_2	CH_4			
Lurgi	Air-steam	40	14	16	25	5	183	75	3465
	Oxygen-steam	1	33	13	37	16	322	86	3730
Koppers-Totzek	Oxygen-steam	2	7	56	35	0	303	92	4265
Winkler	Air-steam	55	10	22	12	1	117	62	2994
Wellman-Galusha	Air-steam	50	3	29	15	3	168	73	3478
Natural Gas[b]		0.6	0.9	--	--	91.5	1066	97	3484[c]

(a) Calculated without dissociation.

(b) Also contains small amounts of C_3H_8 and other hydrocarbons.

(c) For 100 percent CH_4[A-1].

TABLE A-2. FUEL STABILITY FACTORS

Gasifier	Gasification Medium	Flash-Back Velocity Gradient sec^{-1}		Heat Release Rate, 10^3 Btu/ft^3-sec		Gradient x HHV, 10^4 Btu/ft^3-sec		Wobbe[a] No.
		Stoichiometric	Maximum	Stoichiometric	Maximum	Stoichiometric	Maximum	
Lurgi	Air-steam	719	760	54	55	13	14	204.6
	Oxygen-steam	767	775	66	67	25	25	368.2
Koppers-Totzek	Oxygen-steam	2019	2640	187	240	63	84	367.6
Winkler	Air-steam	401	480	25	28	4.7	5.7	122.1
Wellman-Galusha	Air-steam	584	650	43	46	9.7	11	183.0
Natural gas		420	420	40	41	44	44	1364

(a) Higher heating value of the fuel divided by the square root of the fuel specific gravity.

(1) The usual critical flash-back velocity gradients at stoichiometric and the maximum flash-back velocity gradients are presented.

(2) The stoichiometric and maximum values of the product of the gradient and the corresponding higher heating value per cubic foot of fresh mixtures are given.

(3) The stoichiometric and maximum values of the products of the gradients and the corresponding higher heating value of the fuel are tabulated.

Also included are the Wobbe Numbers (the high heating value divided by the square root of the specific gravity) which comprise a useful parameter in evaluating fuel changes in aspirating-type premix burners or burners in which pressure sensitive controls are used to regulate fuel or oil flows.

The gradient values of Table A-2 are obtained from Figures A-1, A-2, and A-3. Figure A-1 presents the flash-back velocity gradients as a function of the ratio of the fuel/air ratio to stoichiometric fuel/air ratio. These gradients were constructed using a modification of the techniques presented in Reference A-2 and data from the same source.* Figure A-2 presents the critical value of the heating rate per unit volume, based on the fresh mixture properties. Figure A-3 represents the curves of Figure A-1 in an alternate form, each curve being multiplied by the corresponding higher heating value for the fuel. It is noted that the natural gas curve peaks close to stoichiometric, while the remainder of the fuel-air mixtures peak on the fuel-rich side.

A consideration of Figures A-1 and A-3 shows that natural gas behaves much like the fuels that have the lower HHV. Other than natural gas, the produced fuels (principally consisting of H_2, CO, and inerts) line up roughly in order of the amount of inert present. Considering Figure A-1, natural gas (with no appreciable inerts) has stability limits lower than all but two of the listed fuels resulting from various coal gasification processes.

In some uses of low and medium energy gas, the gas may be preheated. Similarly, there are instances wherein the air is preheated. These cases may be analyzed in a manner similar to that discussed below for the nonpreheated cases. However, suitable stability curves similar to those in Figures A-1, A-2, and A-3 must first be constructed.

---

* This modified calculation scheme is soon to be published in an upcoming issue of Combustion and Flame.

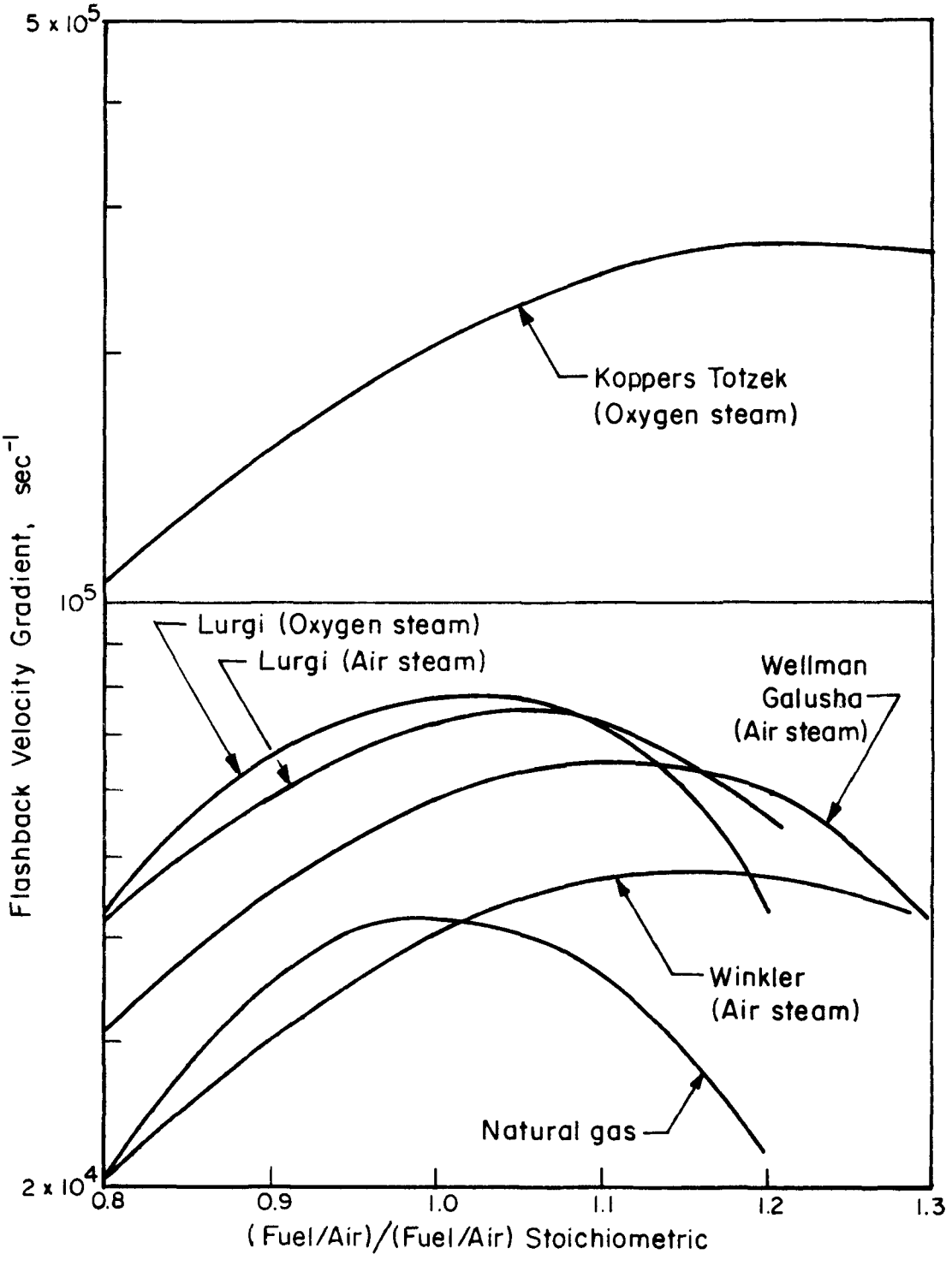

FIGURE A-1. FLASH BACK VELOCITY GRADIENT VERSUS MIXTURE RATIO

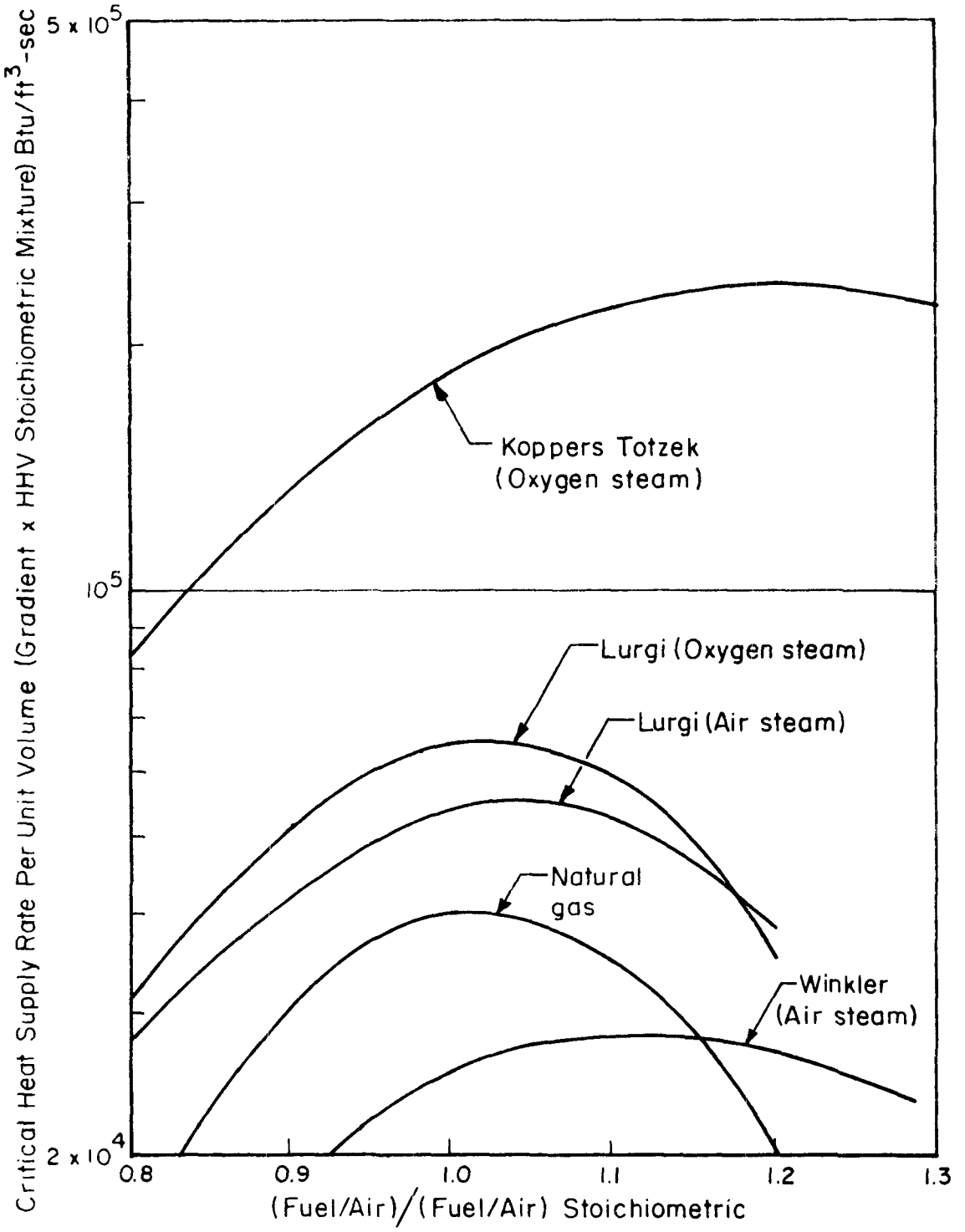

FIGURE A-2. CRITICAL HEAT SUPPLY RATE PER UNIT VOLUME (FLASH BACK VELOCITY GRADIENT TIMES HIGH HEATING VALUE OF THE STOICHIOMETRIC MIXTURE) VERSUS MIXTURE RATIO

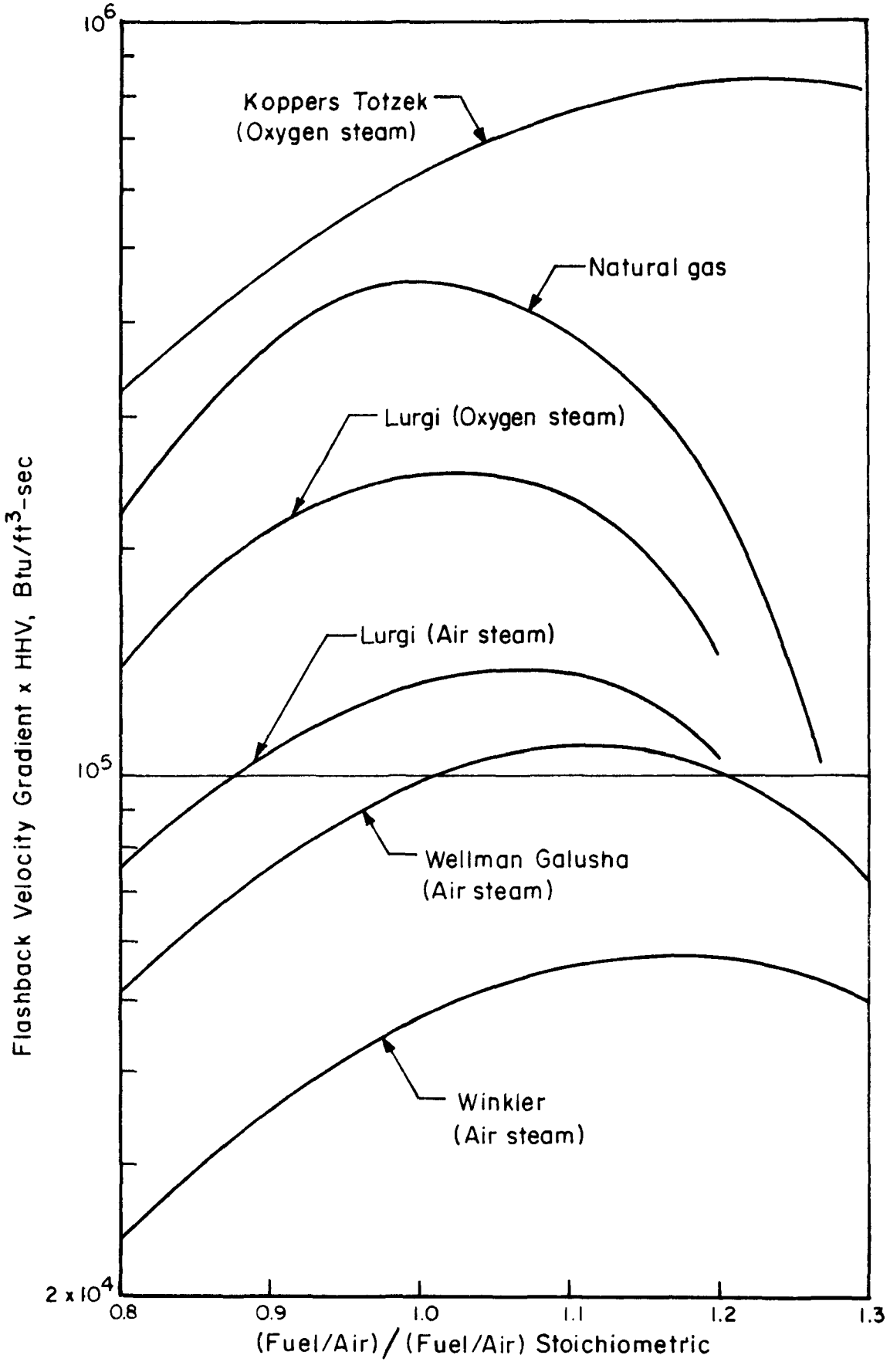

FIGURE A-3. FLASH BACK VELOCITY GRADIENT TIMES GAS HIGH HEATING VALUE (HHV) VERSUS MIXTURE RATIO

Discussion of the Data

Three general types of burners are considered in the discussion of the data--premix burners, delayed-mixing burners, and nozzle-mixing burners. While it is not difficult to distinguish premix burners from the other two types, the distinction between delayed-mixing burners and nozzle-mixing burners is sometimes rather vague. For the purpose of this discussion, combustion in a nozzle-mixing burner will be more intense, with at least a significant fraction of the combustion taking place within the burner tile. Delayed-mixing flames will generally extend a considerable distance from the burner and often be characterized by a low turbulence level and mixing rate. Significant amounts of furnace gases might be recirculated into the base of their flames.

Premix Burners*

Premixed flames are reasonably common in industry and are the easiest to analyze. The premixed fuel and air are supplied through a duct to the combustion region. For high firing rates with turbulent flow, the flame will not hold at the end of the duct. Therefore, a variety of flame holding systems are used. For burners used in open or semiopen applications, an annulus to which some of the mixture is diverted is commonly used. Figure A-4 is an example of such a burner. The flame in the protected annular region acts as a pilot to maintain or hold the main flame. In closed systems (such as tunnel burners), steps, recesses, grids, and other obstacles are used to hold the flame. These form protected recirculation zones, which hold the flame and from which the flame spreads.

In all these cases, the key factor is a term proportional to the velocity gradient at flashback.** As a simple example, consider a closed

---

* "Usually, a burner applied with gas and air which has previously been mixed, but sometimes a burner within which the gas and air are mixed before they reach the nozzle (as opposed to nozzle-mixing burners)."

** Often, in the case of flame holding by obstacles, a delay time is invoked; this is proportional to the reciprocal of the flash-back gradient.

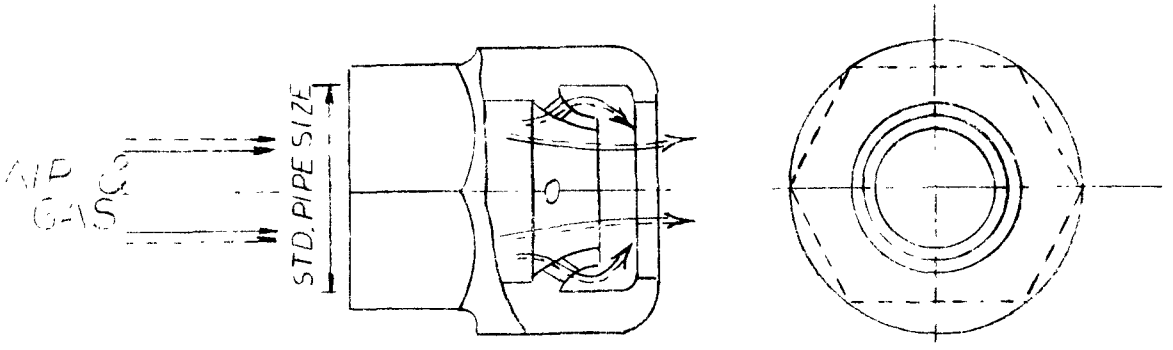

FIGURE A-4. PREMIX BURNER

system where the blow-off velocity gradient, G_{bo}, is, say four times the flash-back velocity gradient, G_{fb}. For turbulent systems, the gradient is usually given merely in the form of U/D--the average flow velocity, U, divided by a characteristic diameter, D. Then, U_{fb} and $U_{bo} = 4\ DG_{fb}$. Now, if the critical velocity gradient is doubled by a change in fuel, then both the blow-off and flash-back velocities will double. In many burners, the equivalent of single or multiple steps are used, so that on premature flashback the characteristic diameter is decreased as the flame moves upstream; this decreases the critical flash-back velocity at the same time as the flow velocity increases, thus stopping the flashback. For such a design, increasing the critical value of G will increase the range of flow rates for stable flames, but not necessarily the heating rate as will be shown.

Considering a single burner with a volume flow rate of combustible mixture, Q, and a heating value per unit volume of mixture, H_m, the heat release rate will be QH_m. When the critical blow-off condition is reached, the heat release rate is given by $QH_m \approx UD^2H_m \approx D^3GH_m$. For a single size of burner, the key term for comparison is GH_m. The relative values of this term are plotted on Figure A-2. It is seen that, on the basis of the heat release rate at blow-off, the lowest Btu fuel is definitely below natural gas in the excess air region. Three more low energy fuels do not differ too much from the natural gas, whereas on the basis of velocity gradient consideration alone (Figure A-1) there is a clear separation.

If the fan power is limited,* the change from, say, natural gas to low energy gas may be complicated by this power limit. The air power is given by $Q\Delta p$, which varies with $\rho Q^3/D^4$. Assuming a constant heat release rate, that is, if QH_m is constant, the air power varies with $\rho/D^4H_m^3$. For a stoichiometric mixture in the air, ρ does not vary appreciably in comparison to H_m^3. Thus, the relative values of H_m are of great importance. It is seen from Table A-1 that the values vary from 97 for natural gas to 62 for gas from a Winkler gasifier. Only gas from a Koppers-Totzek gassifier is

---

* Similar results are obtained if fan pressure is considered to be controlled.

interchangeable with natural gas on this basis. We note that, if D is increased to compensate for the lower value of H_m, flashback will be encouraged. (This is the reason that in shifting to a medium energy gas from natural gas, there is a tendency to shift to nozzle-mixing or delayed-mixing burners). If the number of burners or the number of elements in some burner designs) can be changed, then the constant term is $\rho/N^2D^4H_m^3$. Assuming that burner designs for comparative fuels are to be limited by the critical velocity gradient, then the constant term is $\rho G^{4/3}/N^2H_m^{5/3}$. It is seen that the number of burners must be increased in changing to the low energy gas from natural gas while at the same time the total area of the burners (ND^2), must also be increased with $D \approx (GH_m)^{-1/3}$.

Although the volume of products is not exactly proportional to the volume of fresh mixture, it is close enough that the term $\rho/D^4H_m^3$ can be considered also as a measure of flow power loss through the heat exchanger part of a furnace or boiler. Thus, again, Koppers-Totzek gas is comparable with natural gas, whereas Winkler gas will require almost four times the pressure as that of natural gas to move the products of combustion through the heat exchanger. The higher velocities associated with a change to Winkler gas would result in higher heat fluxes to the first part of the heat exchanger and excessive cooling of the products of combustion in the latter part. Correcting these faults might require rebuilding the heat exchanger, though removal of the proper number of tubes might prove acceptable.

The Wobbe Number which is the ratio of the higher heating value of a fuel to the square root of the specific gravity of the fuel is the common measure of interchangeability in simple combustion units with a fixed firing rate, where (a) fuel is used to aspirate air (which is quite common for simple premixed burners), (b) air is used to aspirate fuel, or (c) a pressure type control is used to control the ratio of the fuel gas and air. The reasoning that leads to the Wobbe Number is as follows.

Consider a unit in which the fuel is used to aspirate the air. In this combustion unit of fixed configuration, with, say, a constant pressure drop on the fuel spuds, $\rho_f Q_f^2$ is a constant. For the heat release rate to be constant, $Q_f H_f$ is also constant, and it follows that H_f^2/ρ_f is a constant. Normalizing the fuel density to specific gravity and taking the square root results in the Wobbe Number. Therefore, if the Wobbe Number

changes, the firing rate of this simple type of unit changes (unless spud size is changed).

But this is not the entire story. In a combustion unit of fixed configuration, with any of the types of interconnections between fuel and air mentioned above, the ratio of momentum flux of the fuel to air remains constant. Thus, $\rho_f Q_f^2 / \rho_a Q_a^2$ is a constant. If α denotes the air/fuel ratio relative to stoichiometric air/fuel ratio and H_a is the heating value of air, $Q_a H_a = Q_f H_f / \alpha$. By substitution, it follows that $(H_f / (\rho_f / \rho_a)^{1/2} / (\alpha H_a)$ is a constant. As the heating value of the air that is used in burning any hydrocarbon fuel does not vary greatly, a change in Wobbe Number also results in a change of excess air in the combustor.

As a result of these effects, for residential units the current practice is to permit only a $\pm$ 5 percent change in Wobbe Number.

No consideration has been given in the above discussion to the change in radiant properties of the flame as a result of the change in fuel. In the absence of particulate matter, the curve of Figure 6-14 of Reference A-4 can be used for comparison purposes. As an example, radiation from the product gases from stoichiometric combustion of the natural gas and Winkler gas is compared below.

The slightly greater amount of $(CO_2 + H_2O)$ for the natural gas leads to about 2 percent greater temperature-emissivity product for natural gas, while the change in H_2O/CO_2 ratio from 1.90 to 0.41 leads to about 10 percent greater temperature-emissivity product for the natural gas flame (actual amount increases with flame thickness). The absolute temperature ratio of the natural gas to Winkler gas is about 1.14. Thus, even though one temperature term is already in the temperature-emissivity product, there is a further 50 percent increase of natural gas radiation compared to Winkler gas. Thus, the gas temperature itself has the largest effect. Convection heat transfer effects and any soot radiation effects will reduce the significance of these differences, but the differences will still be sufficiently large so that they must be evaluated.

Another aspect of radiation is that associated with flame detection and safety considerations. From the above discussion, it is clear that the performance of any radiation activated controls on a furnace must be considered, if the fuel is changed.

Delayed-Mixing Burners*

Turbulent mixing is usually considered as the rate controlling factor in turbulent diffusion flames of industrial importance. The chemically limited reaction rate, which is far greater than the gross reaction rate of the furnace, is not considered to be controlling or even important, other than through its effect on flame stability. However, the effect of turbulence itself is not well understood in complex flow systems, and additional complications arise from the presence of a flame that adds a random set of volume sources as the gases expand by heat from random pockets of combustion.

Nonturbulent and turbulent diffusion flames have one feature in common: the flames must be held at some point, line, or area. In a nonturbulent flame, the adjacent fuel and air interdiffuse over the edge of the burner. At some distance, a combustible mixture of varying composition is reached over a region greater than the normal flame thickness. In this region, at a distance equal to or greater than the quenching distance, a premixed flame develops and holds (or "seats") the diffusion flame. In fact, the diffusion flame may be pictured as a stepwise series of premixed flames, each with hotter but more dilute initial compositions.

In a turbulent flame, a firm seating of the flame often does not occur. One notes that local cells of the fuel and air are of different compositions, temperature, and velocities and have different molecular and thermal dilutions as they approach the reaction zone.** Thus, there are only local regions where the maximum turbulent flame speed can exceed the velocity of the oncoming fuel-air mixture. Therefore, the flame-holding points shift about in space as the local low-velocity regions shift about in the turbulent stream. Furthermore, all of the leading edges of the flame must move at close to the maximum premixed flame speed through the turbulent mixture, stretching and spreading the flame.*** When the flame no longer

---

* Delayed-mixing burners are those "in which the fuel and air leave the burner nozzle unmixed and thereafter mix relatively slowly largely through diffusion. This results in a long luminous flame called a diffusion flame, luminous flame, or long flame."

** This variation from the average of local time and space concentrations is known as the unmixedness of the fluid.

*** Otsuka and Niioka (A-5) suggest that, in cases where the flame is being rapidly stretched as would be the case in a turbulent flame front, the flame forms in the maximum temperature region rather than the stoichiometric region often assumed in the literature.

contacts enough local regions where it can "buck" the oncoming stream and not be extinguished, it will blow off unless held by some independent energy source.

It thus appears that the critical stability parameter in an enclosed turbulent diffusion flame will be related to the maximum flash-back velocity gradient rather than the velocity gradient specific to the average mixture ratio.

Figure A-5 shows typical delayed mixing burners that will result in a long luminous flame. Figure A-5a is a version in which the fuel and air velocities are similar. Natural gas and low Btu gases are interchangeable in this burner with change in gas pressure. We note that a pilot flame is incorporated for ignition and/or piloting of the diffusion flame. The pilot flames are usually premix or nozzle-mix flames. Therefore, if the stability of the diffusion flame depends on the pilot flame, then the stability conditions of the pilot flame are of prime importance. However, even with a pilot flame, the diffusion flame may not be sufficiently held so that a satisfactory flame results. Thus, the stability characteristic of the diffusion flame must also be considered. Current practice in design is to insure satisfactory flame performance without a pilot flame for safety reasons. It is noted that the protective effect of the short tile of this burner helps insure satisfactory holding of the frame.

Figure A-5b shows a delayed mixing burner in which the fuel remains in a high-velocity, coherent jet for a considerable distance surrounded by a low-velocity air mantle. The flame is piloted through the effect of the recirculation and mixing annular region surrounding the fuel jet.

In neither of the burners is there any problem of flash back. Thus, only the possibility of blowing off the flame need be considered in comparing its performance to various fuels. Considering the fuels in Table A-1, it is seen from the order numbers for the maximum flash-back velocity gradient in Table A-2 that natural gas is the most unstable of the tabulated fuels. For medium energy fuels, the combustion systems are much more stable. However, this argument does not take into account the necessary change in fuel flow rate with low energy fuels if the burner remains unchanged.

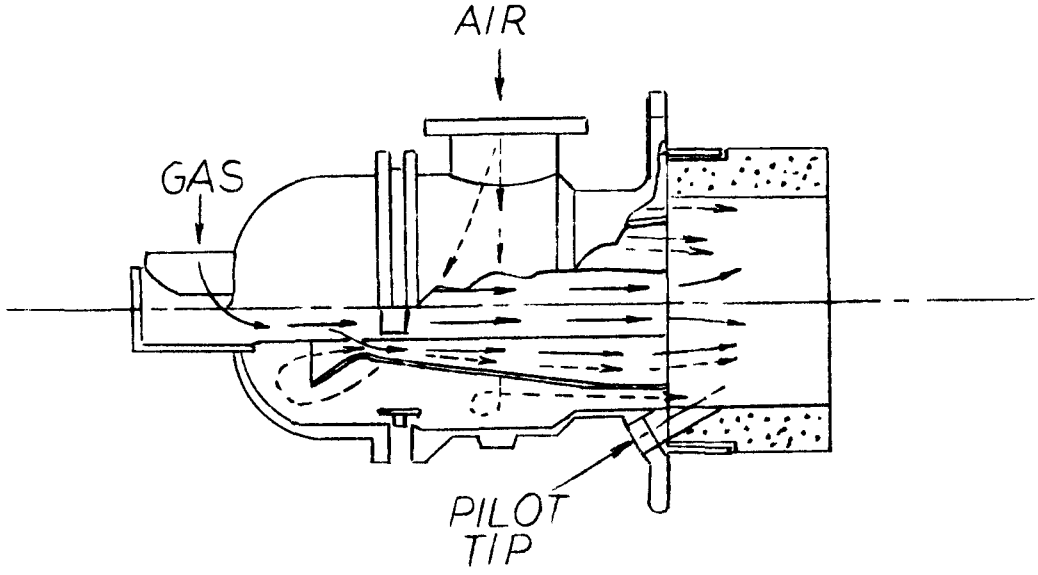

(a)

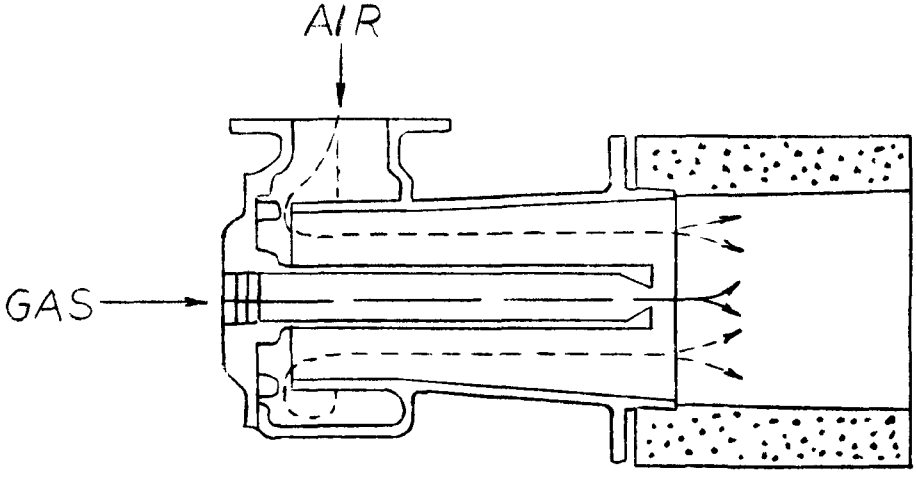

(b)

FIGURE A-5. DELAYED MIXING BURNERS

Figure A-5b may be considered as just a simple diffusion flame of the Bunsen burner type, with only fuel in the central jet with a change in fuel, the maximum diameter of the flame increases as the stoichiometric air/fuel ratio increases. For turbulent flames* at a constant heat input rate, the length of flame changes little. For a constant shape of burner and considering a constant heat input rate and a low velocity of the air in relation to the fuel jet, the holding point of the flame will be determined roughly by the product of the higher heating values and the maximum flash-back velocity gradient. Figure A-3 (and Table A-2) present the values of this point for the various fuels considered. It is seen that the order of fuels has changed from those noted in the previous discussion. Koppers-Totzek gas is now the most stable fuel, and natural gas is above the midpoint of the fuels. Winkler gas is again the least stable. When the fuel velocity is higher than the average air velocity, the movement of the combustible interface outward with increasing air/fuel value ratio at stoichiometric also improves the stability of natural gas relative to the remainder of the fuels.

This is not the entire story, however. For most delayed mixing burners, such as shown in Figure A-5a, the fuel and air velocities are about the same to inhibit premature mixing.** Therefore, stability of the flame, if the flame is held within the tile, is governed by whichever velocity is controlling--the fuel velocity or the air velocity, or a combination thereof--in the exact region of holding. Furthermore, if changes in fuel are made without concomitant changes in burner dimensions, the relative values of fuel and air velocity will change, and the controlling significance may change. The flame may find a stable region of attachment around the annular air jet, rather than the fuel jet. In this case, the flames stabilize closer to the air jet as the air/fuel volume ratio at stoichiometric decreases.

---

* While the aspiration rate of the fuel jet cannot be significantly altered, care is usually taken to eliminate as much swirl and turbulence from the air flow as possible to keep from increasing the mixing rate unnecessarily.

** These are sometimes called laminar flow burners, but this does not denote viscous flow (Reynold's numbers are still high). Rather, it denotes flow without unnecessary high-intensity turbulence.

Furthermore, and more important, the air velocity does not change much with fuel at a constant heat input rate. Thus, the curves of Figure A-1 should be considered for stability.

If the flame does not stabilize close to the inlets in either position, then the slow mixing can result in other diffusion flames starting beyond the tile in the region where recirculating gases will slow the flow velocity and dilute the air annulus.

When these burners are used in radiant tubes, it is often desirable to have the heat flux peak near the burner and hold at that value or fall off gradually, rather than increase slowly to a peak value some distance down the tube. To accomplish this, a small amount of air may be bled into the fuel jet so that the boundary of the fuel jet as it emerges from the fuel tube is a combustible mixture. This portion of the boundary burns as a premixed flame, both boosting the heat flux to the wall near the inlet and serving as a pilot for the downstream diffusion flame. However, because of the diffusion effects, there is still a composition gradient, and the stability even in this case should probably be treated as would a diffusion flame stability problem be treated.

The pressure drops that are involved in supplying the fuel are now considered briefly. As may be deduced from the discussion of the Wobbe Number, in connection with premix flames for a pair of fuels in which this number does not vary too much, the fuels are interchangeable in diffusion-flame applications as well as premix-flame applications. It is seen from Table A-2 that the medium energy gases are the closest to natural gas, but are far from being within the 5 percent variation usually allowed. Furthermore, a massive addition of propane, about 32 percent by volume, would be required to boost the values sufficiently to bring them within range. But it is noted that the energy values of the stoichiometric mixtures are about the same for these fuels as for natural gas, so that changes only in the burner would be required to obtain satisfactory operation of the system.

Interestingly, increasing the orifice sizes for the medium energy gas sufficiently to maintain the same stoichiometry percent results in a decrease in gas pressure while maintaining a constant heat release rate. Changing the orifice size a lesser amount so as to maintain the back pressure on

the fuel, and maintaining a constant heat release rate results in an increase in the excess air using fuel aspiration. This, of course, may be handled by an additional adjustment.

One can conclude, therefore, that in replacing natural gas in a diffusion flame with medium energy manufactured gas, no stability problems will be encountered. However, there can be a stability problem with lower energy fuels if some changes in burners are not made. For diffusion-flame burners, the conclusions relative to pressure drop through heat exchangers and the comments on flame radiation made above for premix burners are unchanged.

Nozzle-Mix Burners*

Nozzle-mix burners combine the advantage of the relatively short flame of the premix burner and the lack of flash-back problems of the diffusion flame. The short flames are obtained by three different methods. Figure A-6a shows the use of multiple high-velocity air jets parallel with the fuel jet. The air jets aspirate the fuel in around them and form short flames because of the small jet diameter and potential core length.** Figure A-6b shows the use of nonparallel jets. These may impinge or may be canted to produce a swirl flame and even a heavy recirculation zone in the center of the jet. If a disk is added to the end of the fuel jet in Figure A-5b, a high-velocity air flow and a recirculation zone are formed which lead to an intense mixing. The burner in Figure A-5b then becomes a nozzle-mix burner. Some of the fuel in this case may be diverted radially to improve mixing further. In all these cases, the internally recirculating hot gases plus the hot ceramic tile wall provides good flame stability.***

If the flame is held as a diffusion flame in a nozzle mix burner, then the flame might either be held around the central fuel jet or the

---

* "A burner in which fuel and air are not mixed until fuel just as they leave the burner port, after which mixing is usually very rapid. The flame cannot flash back in this type of burner."(A-3)

** On occasion, the roles of the fuel and air jets are reversed.

*** Care must be taken to prevent aspiration of cold furnace gases back into the tile at the flame base.

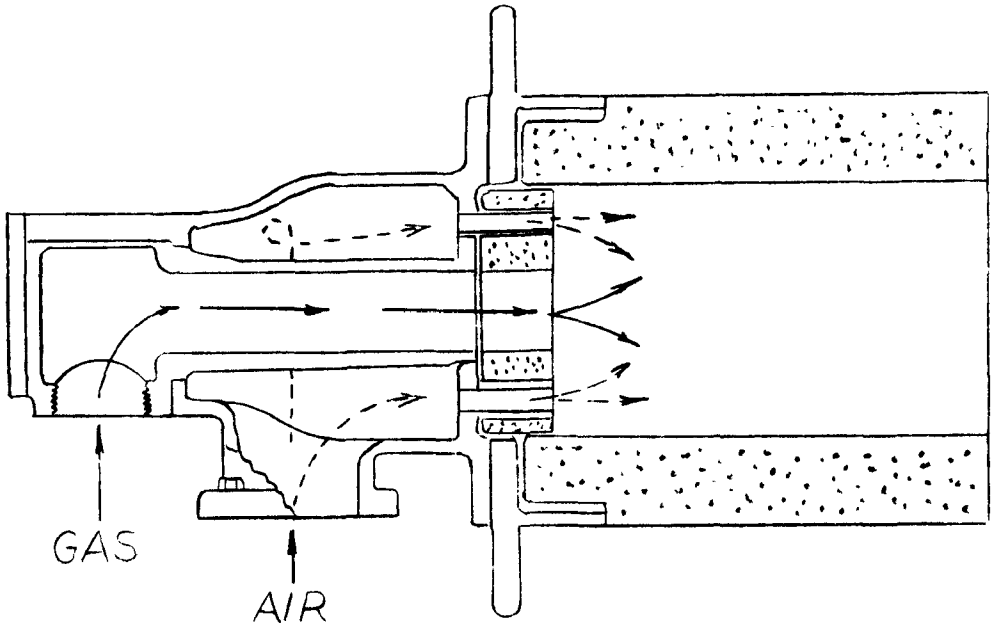

(a)

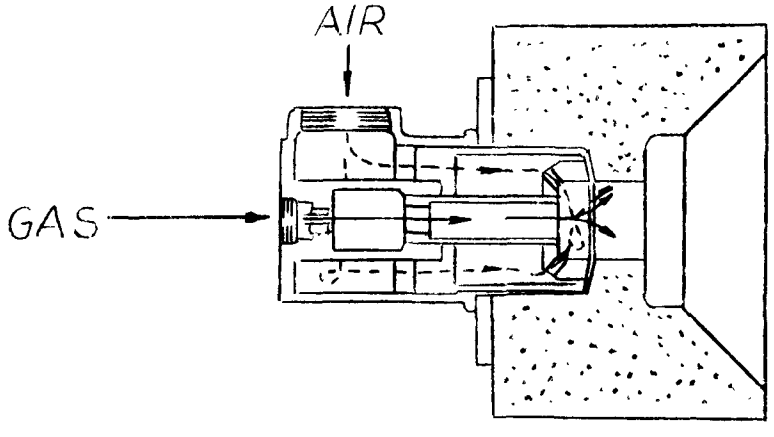

(b)

FIGURE A-6. NOZZLE-MIXING BURNERS

peripheral air jets. The argument here is exactly the same as for the delayed mixing burners. The main difference is that, when the flame is not attached close to the inlet of either the fuel or air, rapid mixing may take place before a stable region for the flame to seat is encountered. In this case, the action of the flame is much like a premix burner.

Therefore, it is concluded that in changing from natural gas to lower energy fuel in a nozzle mixing burner, the position of the flame base may change from around the fuel jet to around the air jets. Therefore, an unqualified comparison of stability cannot be made. As a result, it is not clear whether a flame might satisfactorily contain itself within a nozzle-mixing burner tile with a specific change in fuel.

Again the overall conclusions are similar to those for premix and delayed mixing burners.

References

(A-1) Combustion of Gases, Gas Engineers Handbook, The Industrial Press, 1965, Table 2-59.

(A-2) Grumer, J., Harris, M. E., and Rowe, V. R., Fundamental Flashback, Blowoff, and Yellow Tip Limits of Fuel Gas-Air Mixtures, U.S. Bureau of Mines, RI 5225, 1956.

(A-3) North American Combustion Handbook, The North American Manufacturing Company, 1952.

(A-4) Hottel, H. D., and Sarofim, H. F., Radiative Transfer, McGraw-Hill Book Company, 1967, Figures 6-14.

(A-5) Otsuka, Y., and Niioka, T., The One-Dimensional Diffusion Flame in a Two-Dimensional Counter Flow Burner, Combustion and Flame, 21 pp, 163-176, 1973.

APPENDIX B

FUEL GAS CLEANUP PROCESSES

APPENDIX B. FUEL GAS CLEANUP PROCESSES

Sulfur Removal

Figure 5 shows the expected SO_2 emissions per million Btu heat input versus percent sulfur in the coal for different gasification efficiencies. A coal-heating value of 13000 Btu/lb (7200 kcal/kg) on a moist, ash-free basis was assumed in this case.

For a typical coal combustion process, nearly all the sulfur in the coal is converted to gaseous products in the form of SO_2 in the flue gas. An analysis of Koppers data [B-1] reveals that nearly all the sulfur in the coal is converted primarily to H_2S. For purposes of this study, it was assumed that at least 90 percent of the sulfur in the coal is converted to H_2S.

From Figure B-1 it can be seen that emissions of SO_2 with no sulfur removal would be expected to exceed the current new source standard of 1.2 lb SO_2 per million Btu heat input[B-2] of fuel gas for coals with more than 1 percent sulfur by weight.

Figure B-2 shows the required removal efficiencies of a gas-cleaning device to achieve the Federal standard for a combustion process. For high sulfur coals (up to 7 percent), removal efficiencies of around 90 percent would be required, and for coals above 3 percent sulfur, removal efficiencies above 75 percent would be required to achieve the standard.

Figure B-3 shows the expected concentrations of H_2S in fuel gases of different heating values for an assumed gasification efficiency of 70 percent with coal at 13000 Btu/lb (7200 kcal/kg). Figure B-4 shows how the concentration of H_2S in the fuel gas relates to emission of SO_2 in pounds per million Btu heat input. It can be seen from Figure B-4 that a concentration of about 700 ppm for 100 Btu/scf (888 kcal/m^3) gas to 2000 ppm for 300 Btu/scf (2660 kcal/m^3) gas would be the allowable concentration of H_2S in the fuel gas to meet the standard for steam generators of 1.2 lb SO_2/million Btu heat input (2.1 kg/10^6 kcal).

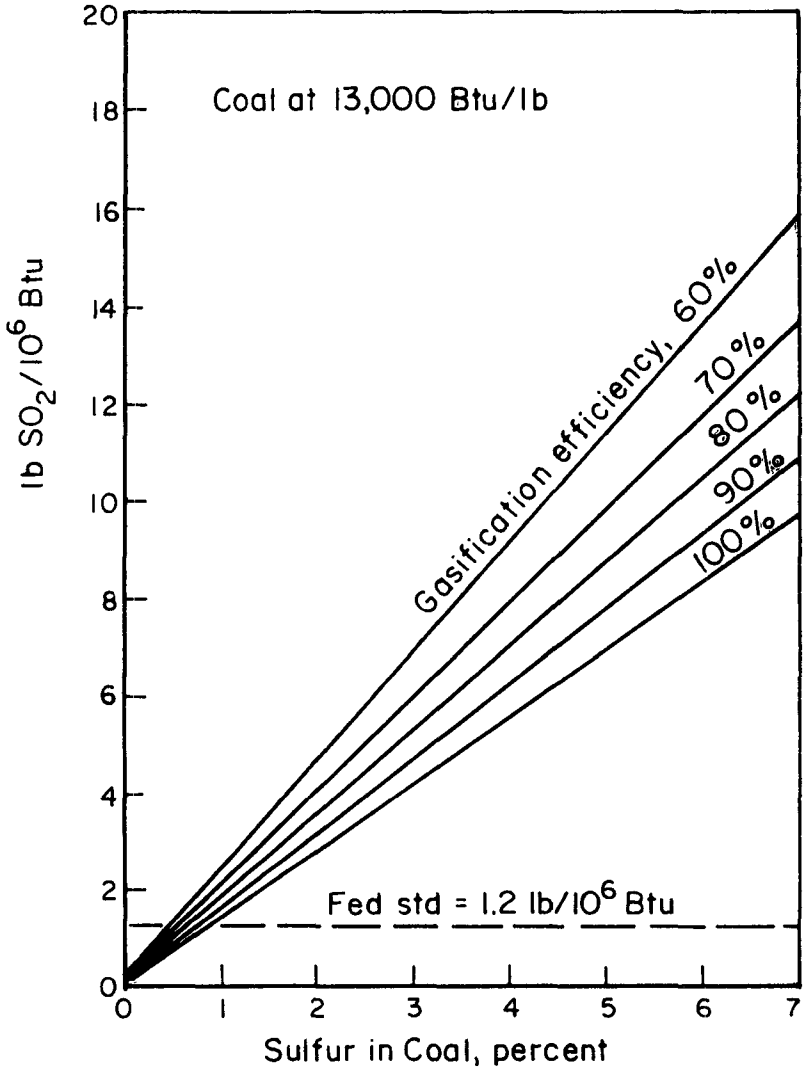

FIGURE B-1. SO_2 EMISSION VERSUS PERCENT SULFUR IN COAL FOR DIFFERENT GASIFICATION EFFICIENCIES

Note: See Appendix C for Determination of Relationships for Sulfur Emissions.

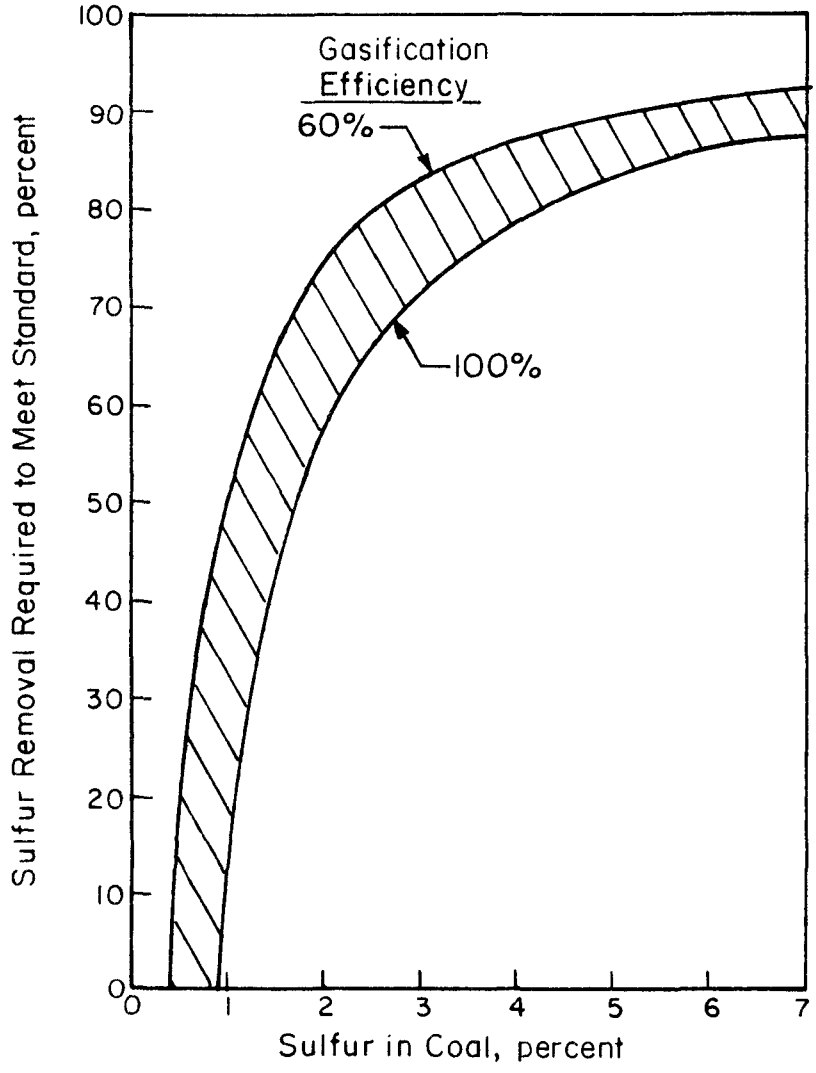

FIGURE B-2. SULFUR REMOVAL REQUIRED TO MEET STANDARD VERSUS PERCENT SULFUR IN COAL

Note: See Appendix C for Determination of Relationships for Sulfur Emissions.

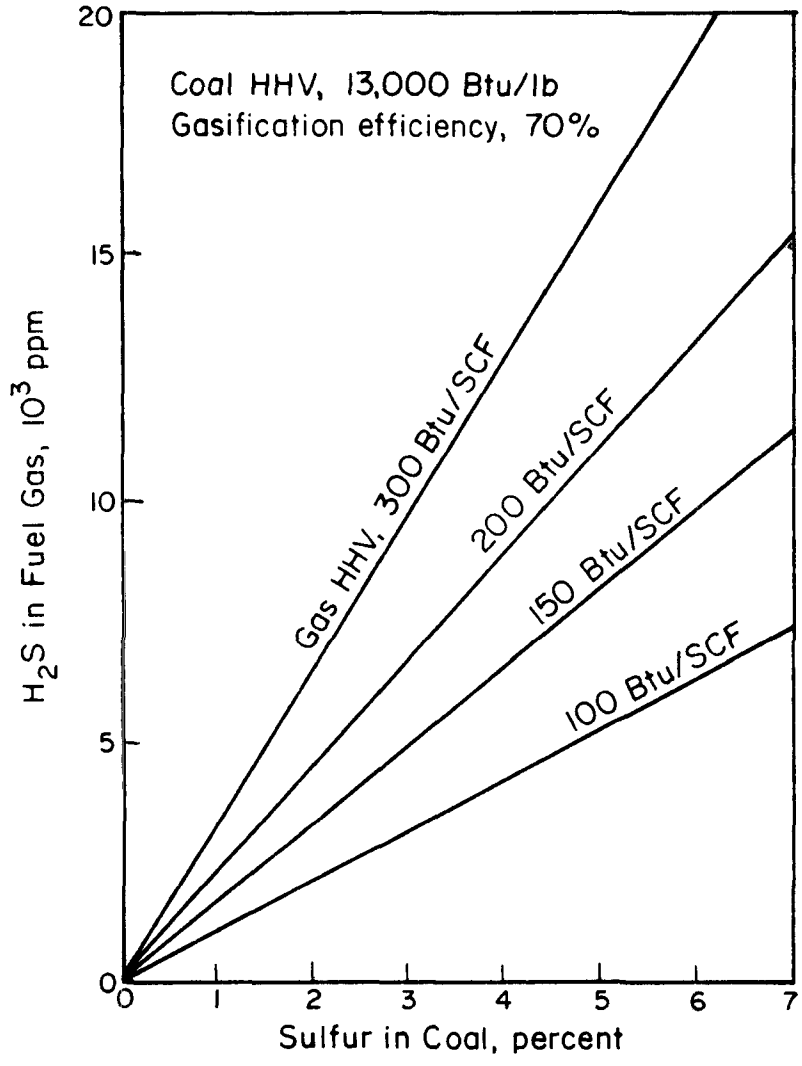

FIGURE B-3. H_2S IN FUEL GAS VERSUS PERCENT SULFUR IN COAL FOR DIFFERENT GAS HIGH HEATING VALUES (HHV)

Note: See Appendix C for Determination of Relationships for Sulfur Emissions.

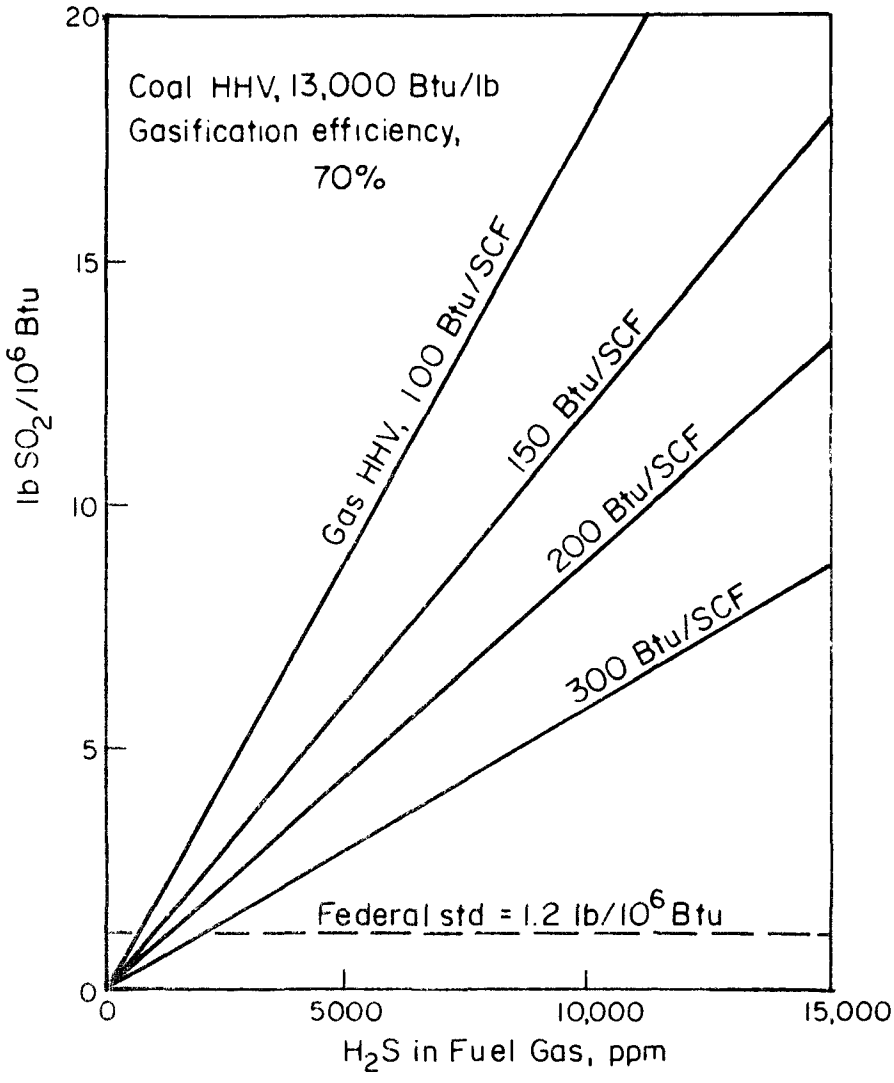

FIGURE B-4. SO_2 EMISSION VERSUS H_2S CONCENTRATION IN FUEL GAS FOR DIFFERENT GAS HIGH HEATING VALUES (HHV)

Note: See Appendix C for Determination of Relationships for Sulfur Emissions.

Commercial processes currently available for removing sulfur from fuel gas are listed in Table B-1. All these processes except two, the iron sponge process and activated carbon process, utilize some form of liquid scrubbing for removing sulfur. The highest temperature at which any of them are capable of operating is 250 F (122 C).

Normally, when one of these systems is employed for sulfur removal, the gas from the gasifier is first processed through a waste heat boiler to utilize some of the sensible heat in the gas to raise steam. The estimated steam raising capabilities of the four gasifiers discussed here are given in Table 4. Some of the sensible heat in the gas can also be used to preheat the air or oxygen feed to the gasifier to further improve the overall thermal efficiency of the unit.

The minimum temperature the gas can be cooled to and still be usable for steam raising or gas preheating is around 300 to 500 F (150 to 260 C), depending on the desired steam pressure or preheat temperature. The gas is then cooled still further by scrubbing with water to the temperature required by the cold sulfur removal process. The water also removes particulates, ammonia, and condensable tars if present. Some H_2S and CO_2 may also be removed in the water scrubber though, due to the low solubility of H_2S in water (1/3000th that of SO_2)[B-3] the amount of H_2S removed should be negligible.

After water scrubbing, the gas is ready for the sulfur removal process. The water used for scrubbing is generally filtered to remove particulates and tar and then heated to strip off ammonia along with some other acid gases prior to going through a cooling tower and being returned to the scrubber. The ammonia in the stripped gas (possible 15 percent by volume) can be recovered as a marketable product by existing processes.[B-4]

Amine Scrubbing. The first group of processes in Table B-1 remove sulfur with chemical absorption in an organic amine compound. These processes operate at ambient temperatures or slightly above. The applicability of these processes to cleaning of the gas from coal gasification is doubtful, as the sorbents are expensive and tend to be rendered nonregenerable by other impurities in the gas such as heavier hydrocarbons and carbonyl sulfide.

TABLE B-1. CONVENTIONAL PROCESSES FOR FUEL GAS DESULFURIZATION

Process	Sorbent	Removes	Final H_2S Concentration ppm	Temperature Range	Comments
• Amine					
MEA	Monoethanol amine	H_2S, CO_2	<4	70-100 F	Sorbent expensive. Forms nonregenerable compounds with COS.
DEA	Diethanol amine	H_2S, CO_2	<400	70-100 F	Sorbent more expensive than MEA but not so sensitive to COS.
Economine	Diglycol amine	H_2S, CO_2	<4	70-100 F	Sorbent expensive. Problems with corrosion, foaming.
Alkazid	Solution M or DIK Potassium salt of demethyl amine-acetic acid	H_2S, some CO_2	10-40	Ambient	Sorbent expensive. Problems with corrosion, foaming.
Sulfinol	Amine plus tetrohydro-thiophene dioxide	H_2S, CO_2 H_2S selective	4	Ambient	Sorbent expensive. Heavy hydrocarbons readily absorbed.
• Alkali					
Seaboard	Na_2CO_3	H_2S, COS, HCN	--	Ambient	Considered obsolete. No H_2S, CO_2 recovery.
Vacuum-carbonate	NA_2CO_3	H_2S, COS, HCN	--	Ambient	Modern Seaboard. Needs large circulating liquor rate. Sorbent regenerated under 25 in. Hg vacuum.
Bureau of Mines	Hot K_2CO_3	H_2S, CO_2 H_2S selective	10	130-250 F	High steam, circulating liquor requirement. Insensitive to COS.
Benfield, Catacarb	Hot K_2CO_3 + catalyst	H_2S, CO_2 H_2S selective	10	30-250 F	Catalyst allows smaller circulating liquor rate than Bureau of Mines process.
Shell	Hot K_3PO_4	H_2S, CO_2	--	130-250 F	Lower liquor rates than K_3PO_4 processes. Requires large amount of stripping steam.
Ammonia	Ammoniacal liquor	H_2S	--	--	Some ammonia already available in gas.

TABLE B-1. Continued

• Direct Oxidation to Elemental Sulfur					
Wet iron box	Iron oxide in Na_2CO_3 slurry	H_2S	--	Ambient	Sulfur not pure enough for use.
Ferrox, Gluud, Manchester	Iron oxide in Na_2CO_2 slurry	H_2S	--	Ambient	Modern wet iron box. 90-95 percent pure sulfur.
Thylox	Sodium or ammonium arsenate	H_2S	1	50-212 F	Considered obsolete.
Giammarro-Vetrocoke	$K_3A_sO_3$	H_2S, some CO_2	1	50-212 F	Modern thylox. Sulfur pure enough for agricultural use. Arsenate a potential hazard.
Stretford	Na_2CO_3 + Na_2VO_3 + catalyst	H_2S	1	50-100 F	Expensive sorbent. High liquor rates. Sulfur may be of low purity.
• Physical Absorption					
Rectisol	Methanol	H_2S, CO_2	1	0 to -80 F	Expensive sorbent. Gas must be cooled below ambient.
Purisol	N-methyl-2-pyrrolidone	H_2S, CO_2	2	Below ambient	Expensive sorbent. Heavy oils also removed. Impurity must have high partial pressure.
Selexol	Dimethvl ether, polyethylene glycol	H_2S, CO_2	4	Below ambient	Same as purisol.
Fluor	Propylene carbonate	H_2S, CO_2	4	Below ambient	Same as purisol.
• Dry Adsorption					
Iron sponge	Hydrated iron oxide on wood shavings	H_2S	0	Ambient	Completely removes H_2S for inlet concentrations less than 300 ppm. Batch operation.
Activated Carbon	Carbon	H_2S	--	Ambient	Sulfur forms on carbon requiring frequent replacement.

Note: Table is a list of representative processes and not all known processes.

Alkali Scrubbing. The next group of processes listed in Table B-1 involve chemical absorption in alkali or inorganic absorbents. The Seaboard process developed by Koppers is obsolete, as there is no means for regenerating the absorbent. The vacuum carbonate process is similar to the Seaboard process but allows for sorbent regeneration under 25 in. Hg vacuum with steam. The sorbent, Na_2CO_3, is not very soluble in water and requires large circulating liquor rates. The next process (originally developed by the Bureau of Mines) uses hot K_2CO_3 as the sorbent. This process has the highest operating temperature (250 F, 120 C) of any of the cold gas cleanup systems. The Benfield and Catacarb processes are very similar to the process developed by the Bureau of Mines, except that they employ proprietary catalysts to increase the rate of absorption and stripping, thus decreasing the required liquor flow rates. The hot carbonate processes operate best at about 300 psig (2060 N/m^2-hr) pressure. The sorbent is regenerated with steam, and, due to the high liquor flow required, a relatively large amount of steam is necessary (up to 1 lb of steam per 6 ft^3 of acid gas[B-5] or 0.453Kg/0.17 m^3).

The Shell process uses hot K_3PO_4 instead of K_2CO_3. K_3PO_4 is more soluble in water than K_2CO_3, thus reducing the required liquor flow rate. A large amount of steam is still required for regenerating the sorbent, however.

A potentially attractive process is scrubbing with an ammoniacal liquor, since a certain amount of ammonia is already available from the water scrubbing process. Ammoniacal scrubbing is currently planned for use on the air-blown gasifiers at the Lurgi gas-turbine power plant demonstration unit in Lunen, Germany.[B-6]

Direct Oxidation. Direct oxidation processes have the desirable characteristics of converting H_2S from the gas stream directly to elemental sulfur and being selective for H_2S. Absorption of CO_2 along with H_2S requires unnecessary liquor flow and larger equipment. The Wet Iron Box process, of which the Manchester, Gluud, and Ferrox are modern applications, react H_2S with iron oxide (Fe_2O_3 or $Fe(OH)_3$) in a sodium carbonate slurry to oxidize H_2S directly to sulfur. Reportedly, sulfur of 90-95 percent purity can be attained.[B-5] These processes have not been well developed, however, and immediate commercial availability is doubtful.

The Thylox and Giammarco-Vetrocoke processes use sodium, ammonium, or potassium arsenate solutions to absorb and oxidize H_2S to elemental sulfur. The

sorbent is expensive, however, and the presence of arsenate makes it potentially hazardous as a pollutant if leakage should occur.

The Stretford process uses a mixture of sodium carbonate and sodium vanadate as the absorbing oxidizing solution. The process is capable of operating over a wide range of pressures but requires high solution-flow rates with an expensive absorbent, and the resulting sulfur content may be too high to render the fuel usable.

Physical Absorption. Physical absorption processes were developed primarily to attain an extremely low concentration of sulfur in synthesis gases to prevent contamination of catalysts used in synthesizing methane and other higher hydrocarbon products from the gasification of various fuels including coal. They all are designed to operate best at temperatures below ambient, though some can operate at ambient.

The Lurgi-Rectisol process uses very cold (-80 F, -62 C) methanol as the absorbent. This process is currently used to clean synthesis gas at the giant Lurgi gasification plant in Sasolburg, South Africa.[B-7] The absorption takes place at temperatures from 0 to -80 F (-28 to -62 C), resulting in a high degree of gas purity (total sulfur less than 3 ppm).[B-4]

The Purisol, Selexol, and Fluor processes are similar to the Lurgi-Rectisol except that they use different absorbents and the absorption takes place at near ambient temperature and elevated pressure. Attainable gas purity with all three processes is around 4 ppm total sulfur.[B-4]

In all four physical absorption processes the sorbent is expensive and the gas must be cooled to at least ambient temperature. The gas purity obtained in these processes is more in keeping with the strict requirements of catalytic synthesis operations rather than the more lenient requirements of environmental acceptability.

Dry Adsorption Processes. The iron sponge process utilizes hydrated iron oxide impregnated on wood shavings to selectively remove H_2S. It is a batch process, however, and requires frequent replacement of the sponge.

Activated carbon can also be used to obtain very low concentrations of H_2S in the product gas. Sulfur tends to form in the pores of the carbon, however, resulting in need for frequent replacement of the bed.

Hot Cleanup Processes. Currently, three processes are under development for sulfur removal from flue gases at elevated temperatures, though none are presently commercially available. These are the Battelle-Northwest molten salt scrubbing process, the Air Products and Chemical Company's solid absorbent process, and the Bureau of Mines iron oxide process.

The Battelle process utilizes a mixture of molten alkali metal carbonates containing calcium carbonate in solution as the working fluid for a venturi scrubber, which is designed to remove particulates and sulfur compounds at temperatures from 100 to 1650 F (592 to 895 C). The molten salt is filtered to remove particulates and regenerated with a steam-CO_2 mixture.

The Air Products process utilizes an absorber comprised of fully calcined dolomite ($MgO \cdot CaO$), with the H_2S in the fuel gas reacting with CaO to form CaS over a temperature range from 1100 to 1650 F (592 to 895 C). Regeneration is by reaction with steam. This process utilizes the approach initially suggested by A. M. Squires.[B-10]

The Bureau of Mines iron oxide process utilizes pellets of fly ash impregnated with iron oxide in a packed bed to remove H_2S at temperatures from 1000 to 1500 F (535 to 815 C). This process has been tested on producer gas at the Bureau's Morgantown gasification site in a pilot-scale demonstration unit and achieved 95 to 97 percent removal of H_2S.[B-8,9] Regeneration is by air blown through the bed at around 1000 F, releasing the sulfur in the form of SO_2.

The Consolidation Coal Company dolomite process[B-11] reacts H_2S in the fuel gas with half calcined dolomite ($MgO \cdot CaCO_3$) in a fluidized bed at 1652 F and 15 atmospheres pressure. The spent sorbent ($MgO \cdot CaS$) is regenerated with CO_2 and recalcined at 1300 F. H_2S is liberated in the regeneration step.

Waste or By-Product Recovery of Sulfur

In most of the liquid scrubbing processes in Table B-1 the sorbent is regenerated by stripping off H_2S and other absorbed gases. The H_2S at a sufficiently high concentration of 10 percent or more can be converted to elemental sulfur in a Claus conversion unit.

In the Claus split-stream process[B-4,5], one-third of the gas stream is split and combined with air to completely oxidize H_2S to SO_2 and hydrocarbons to CO_2. This stream is then combined with the remaining two-thirds of the gas stream over a bauxite catalyst, where H_2S and SO_2 combine to form elemental sulfur. Typically, 90 to 96 percent of the sulfur is removed from the feed gas.

Further sulfur removal may be necessary on the tail gas of the Claus unit, depending on the amount of sulfur originally removed from the fuel gas.

Some of the liquid scrubbing processes in Table B-1 convert H_2S directly to elemental sulfur. These processes have declined in favor, however, and are not well developed. Also, in some cases the sulfur is of too low a purity to be efficiently recovered for further use.

Recovery of sulfur or waste disposal from the proposed hot cleanup processes is not well defined due to lack of development. In the Bureau of Mines iron oxide process (the most highly developed of the three currently), the sorbent is regenerated with air, stripping the sulfur off in the form of SO_2. The disposition of SO_2 is more difficult than H_2S, since production of elemental sulfur requires a reducing agent. SO_2 can be converted to sulfuric acid, H_2SO_4, by conventional processes, though these are more complicated than the Claus process; also, the sulfuric acid (H_2SO_4) is more difficult to handle and dispose of than sulfur.

Particulates Control

All four of the gasification processes discussed earlier will require some form of particulate control. The Winkler reactor has the highest reported ash carryover of the four gasifiers, with 70 percent of the coal ash being carried over in the gas. The Koppers process carries over about 50 percent of the ash into the gas, with the nature of the ash similar to that from a pulverized coal fired boiler. The Wellman-Galusha and Lurgi processes would have lower dust loadings in the fuel gas than either that of the Winkler or Koppers, but would also contain condensable tars that should be removed to prevent fouling of burners and other fuel-handling processes.

Only one of the proposed hot sulfur removal processes, the Battelle-Northwest molten salt process, proposes to remove particulates along with sulfur at elevated temperatures. Both the Air Products dolomite process and the Bureau of Mines iron oxide process also require some form of particulate removal at elevated temperatures. Work has been done on developing high-temperature precipitators operating at temperatures above 1500 F (815 C)[B-12] though these systems have not yet seen significant commercial application. Filtration through beds of sized granular solids also looks promising though this concept must be demonstrated commercially.

The presence of condensable tars in the gas could also be troublesome. If tarry compounds are allowed to condense on collecting surfaces or filter media they could seriously affect performance of the unit. None of the hot sulfur removal processes are intended to also remove tars. If these tars are not removed prior to gas distribution and use, care must be taken to maintain high temperatures and generously sized gas passages to prevent plugging and fouling of gas mains and burners.

If the gas is to be cleaned and used cold--below 300 F (149 C)--the gas temperature must be lowered from the gasifier exit temperature to between 300 F (149 C) and 500 F (260 C) by either preheating the air or oxygen feed, raising process steam in a waste heat boiler, or some combination of both. The gas then can be processed through conventional particulate removal devices. The most common method is water scrubbing, which also serves to remove condensable tars and ammonia while lowering the gas temperature still further for the subsequent sulfur removal process.

Nitrogen Oxides

Coal gasification is basically the first stage of a two-stage combustion process. As a result of the reducing atmosphere in the gasification zone, nearly all of the nitrogen in the coal is converted to ammonia (NH_3), with small amounts going to HCN and other trace compounds (Table 2). Only a very small amount of NO_x would be formed in the gasification step.

If water scrubbing is employed in a cold gas cleanup system, a large amount of the ammonia would be removed. If cleanup processes are used that don't remove ammonia (hot gas cleanup systems, for example), then the ammonia would be carried through to the final combustion process, in which case the eventual NO_x emissions from oxidation of ammonia during combustion would be expected to be similar to those of normal two-stage coal combustion.

References

(B-1) The Production of Gas from Coal Through a Commercially Proven Process, Farnsworth et al., Koppers, 1973.

(B-2) United States Federal Register, Vol. 36, No. 247, December 23, 1971.

(B-3) Chemical Engineer's Handbook, Fifth Edition, Perry and Chilton, McGraw-Hill, 1973.

(B-4) A Survey of R&D Projects Directed Toward the Conversion of Coal to Gaseous and Liquid Fuels, IGT, Chicago, 1971.

(B-5) Technological and Economic Feasibility of Advanced Power Cycles and Methods of Producing Non-Polluting Fuels for Utility Power Stations, Robson, et al., United Aircraft Research Laboratories, 1970.

(B-6) New Fossil-Fueled Power Plant Process Based on Lurgi Pressure Gasification of Coal, Lurgi Gessellschaften, 1970.

(B-7) SASOL Today, The South African Coal Oil and Gas Corporation Limited.

(B-8) Hydrogen Sulfide Removal From Hot Producer Gas With Sintered Absorbents, Schultz, Berber, APCA Journal, February, 1970.

(B-9) Hot Sulfur Removal From Producer Gas, Schultz, Lewis, 3rd International Conference on Fluidized Bed Combustion, Hueston Woods, 1972.

(B-10) Cyclic Use of Calcined Dolomite to Desulfurize Fuels Undergoing Gasification, A.M. Squires, Fuel Gasification, Advances in Chemistry Series No. 69, American Chemical Society, Washington, D.C., 1967.

(B-11) Production of Clean Fuel Gas From Bituminous Coal, Curran, et al., Consolidation Coal Company, EPA Report 650/2-73-049, 1973.

(B-12) Air Pollution Control, Edited by Werner Straus, 1971.

APPENDIX C

DETERMINATION OF RELATIONSHIPS FOR SULFUR EMISSIONS GIVEN IN FIGURES B-1 THROUGH B-4

APPENDIX C

DETERMINATION OF RELATIONSHIPS FOR SULFUR EMISSIONS GIVEN IN FIGURES B-1 THROUGH B-4

Relationships between lbs $SO_2/10^6$ Btu versus the percent sulfur in coal. (Figure B-1)

(1) lbs S/lb coal = % S/100

(2) lbs S/Btu (coal) = lbs S/lb coal x $\frac{1}{HHV_c}$

(3) lbs S/10^6 Btu (coal) = lbs S/Btu (coal) x 10^6

(4) lbs S/10^6 Btu (gas) = lbs S/10^6 Btu (coal) x $\frac{1}{Ng}$

Assuming 90 percent sulfur carryover from coal to gas, equation (4) becomes:

(5) lbs S/10^6 Btu (gas) = 0.90 lbs S/10^6 Btu (coal) x $\frac{1}{Ng}$

or by substitution:

(6) $$\frac{\text{lbs S}}{10^6 \text{ Btu (gas)}} = \frac{\%S}{100} \times \frac{10^6}{HHV_c} \times \frac{0.90}{Ng}$$

Because 1 mole S yields 1 mole SO_2 and

Molecular weight S = 32
Molecular weight SO_2 = 64.

The weight of SO_2 = 2 x weight of sulfur, therefore

(7) $$\frac{\text{lbs } SO_2}{10^6 \text{ Btu (gas)}} = \frac{\%S}{100} \times \frac{10^6}{HHV_c} \times \frac{0.90}{Ng} \times 2$$

or

(8) $$\frac{\text{lbs } SO_2}{10^6 \text{ Btu (gas)}} = \frac{1.8 \times 10^4 \ \%S}{HHV_c \ \ Ng}$$

Relationsip between percent sulfur removal required to meet standard of 1.2 lbs $SO_2/10^6$ Btu versus percent sulfur in coal. (Figure B-2)

(9) $$\text{Percent } SO_2 \text{ removal} = \frac{\text{lbs } SO_2/10^6 \text{ Btu (gas)} - 1.2}{\text{lbs } SO_2/10^6 \text{ Btu (gas)}} \times 100$$

or

(10) $$\text{Percent } SO_2 \text{ removal} = 1 - \frac{1.2}{1.8 \times 10^4 \ \%S/HHV_c \ Ng}$$

Relationship between H_2S content of fuel gas *ppm) and percent sulfur in coal. (Figure B-3)

(11) $$\frac{\text{moles S}}{10^6 \text{ Btu (gas)}} = \frac{\text{lbs S}}{10^6 \text{ Btu (gas)}} \times \frac{1}{32} = \frac{\text{moles } H_2S}{10^6 \text{ Btu (gas)}}$$

(12) $$\frac{\text{moles } H_2S}{10^6 \text{ Btu (gas)}} \times HHVg = \frac{\text{moles } H_2S}{10^6 \text{ scf (gas)}}$$

At 32 F and 29.92 in. Hg, 1 mole of H_2S occupies 359 ft^3. Therefore, at 60% and 30 in. Hg (standard gas condition for this report), 1 mole of H_2S occupies

$$359 \times \frac{520}{492} \times \frac{29.92}{30.0} = 378 \ ft^3$$

(13) $$\frac{\text{moles } H_2S}{10^6 \text{ scf (gas)}} \times 378 = \frac{ft^3 \ H_2S}{10^6 \text{ scf (gas)}} = \text{ppm } H_2S$$

By combining equations (11), (12), and (13), and using equation (6) the following expression can be developed.

(14) $$\text{ppm } H_2S \text{ (in fuel gas)} = \frac{\%S}{100} \times \frac{10^6}{HHV_c} \times \frac{0.90}{Ng} \times \frac{1}{32} \times HHVg \times 378$$

or

(15) $$\text{ppm } H_2S = \frac{10.6 \times 10^4 \ (\%S) \ (HHVg)}{(HHV_c) \ (Ng)}$$

Relationsip between lb $SO_2/10^6$ Btu and ppm H_2S in fuel gas. (Figure B-4)

By equation (13):

$$(16) \quad \frac{\text{ppm } H_2S}{370} = \frac{\text{moles } H_2S}{10^6 \text{ scf (gas)}} = \frac{\text{moles } SO_2}{10^6 \text{ scf (gas)}}$$

$$(17) \quad \frac{\text{moles } SO_2}{10^6 \text{ scf (gas)}} \times \frac{64*}{HHVg} = \frac{\text{lbs } SO_2}{10^6 \text{ Btu}}$$

*64 is molecular weight of SO_2, therefore

$$(18) \quad \frac{\text{lbs } SO_2}{10^6 \text{ Btu}} = \text{ppm } H_2S \times \frac{1}{378} \times \frac{64}{HHVg}$$

or

$$(19) \quad \frac{\text{lbs } SO_2}{10^6 \text{ Btu}} = \frac{0.169 \text{ ppm } H_2S}{HHVg}$$

List of Symbols for Appendix C

%S - Percent sulfur content of coal on moisture ash-free basis.

HHV_c - High heating value of coal on a moisture ash-free basis.

HHVg - High heating value of fuel gas.

Ng - Gasification efficiency. Heat content of product gas divided by heat content of coal.

scf - Standard cubic foot (@ 60 F and 30 in. Hg).

APPENDIX D

CALCULATION OF RELATIVE GAS PRESSURE DROP

APPENDIX D

CALCULATION OF RELATIVE GAS PRESSURE DROP

This appendix describes the calculation procedure used in calculating the relative pressure drops in distribution mains, valves, burners, and flow passages downstream of the combustion zone when typical low-energy gases from coal are substituted for natural gas.

The values given in Table 5 are relative pressure drops expressed as multiples of the pressure drop incurred with natural gas in a given distribution and combustion system. Values are given for two cases.

- Based on the fuel gas only (Column 5, Table 6). These values apply to increases in pressure drop that might be expected in distribution mains, valves, and premix type burners when the low-energy gases are substituted for natural gas. The values are based on the relative increases in flow rates of fuel necessary to achieve equivalent heat release to natural gas (Column 3, Table 6).

- Based on the stoichionetric mixture (Column 6, Table 6). These values apply to increases in pressure drop that might be expected in nozzle mix type burners and flow passages downstream of the combustion zone. The values are based on the relative volume flows of the stoichiometric mixtures (Column 4, Table 6) which are roughly comparable to the relative volumes of combustion products that would result when sufficient fuel and air are mixed to achieve equivalent heat release to natural gas.

The following is a derivation of the expression used to calculate the relative pressure drops given in Columns 5 and 6 of Table 6 including the assumptions involved.

The pressure loss in a piping system, ignoring changes in elevation and entrance and exit losses, can be expressed with the following:

$$\Delta P^{*} = \left[\frac{4fL}{D} + K_c + K_e + K_f \right] \frac{\rho \bar{V}^2}{2} \qquad \text{(B1)}$$

where
- ΔP - pressure loss
- f - friction factor
- L - pipe length
- D - pipe hydraulic diameter
- K_c - contraction loss coefficient
- K_e - expansion loss coefficinet
- K_f - fitting loss coefficient
- ρ - gas density
- $\bar{V}$ - average flow velocity at the system inlet.

*Expression is a modified form of equation 5-77 on page 115 of Reference B-1.

Equation (B1) is an adaptation of the Bernoulli equation and expresses the pressure loss as a number of "velocity heads" $\left(\frac{\rho V^2}{2}\right)$.

The first term in brackets in equation (B1) accounts for the pressure loss in straight pipe section due to friction between the walls and the flowing fluid. The friction factor (f) is dependent to varying degrees on the pipe Reynolds number and the surface finish or relative roughness of the pipe material. Figure B-1 is a plot of the relationship between the friction factor and the Reynolds number time $\sqrt{f}$ for various types of pipe. In turbulent flow, which was assumed for these calculations, f varies only slightly with Reynolds number for a given pipe material. Therefore, because these calculations involve the comparison of relative pressure drops of different gases in the same piping system the term (4f L/D) was assumed to be constant.

The terms K_c and K_e are contraction and expansion loss coefficients, respectively, and account for pressure losses in sections of changing cross-sectional area in the flow passage. They are a function of the ratio of the upstream to downstream cross-section area and for a given pipe system can be assumed constant over a wide velocity range.

K_f is a fitting loss coefficient accounting for pressure loss in elbows, valves, orifices, and other flow obstructions in the flow stream. K_f varies for different types of obstructions but for a given pipe system can be considered constant.

Following from the above discussion where the bracketed terms in equation B1 are considered as constant for a given flow system over a wide range of flow velocities equation B1 can be replaced by a simpler form.

$$\Delta P = \frac{K\rho\bar{V}^2}{2K} \qquad \text{(B2)}$$

Here, K is considered as an overall pressure loss coefficient for the entire flow system.

For these calculations the pressure loss of various low energy gases is to be compared to natural gas when using the same piping or flow system to achieve equivalent heat release. Equation B2 can be expressed as

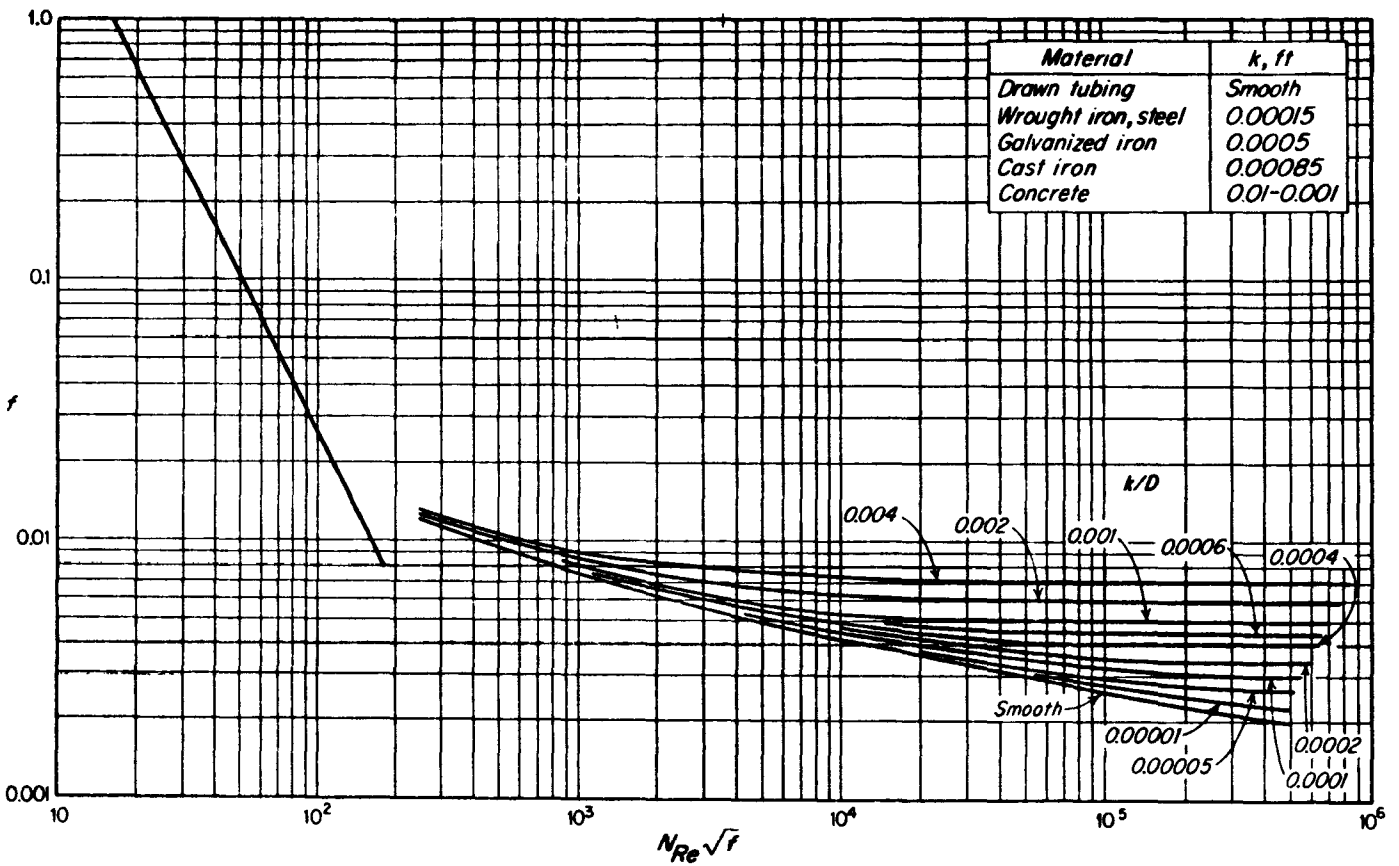

FIGURE D-1. FRICTION FACTOR CHART, FRICTION FACTOR f VERSUS REYNOLDS NUMBER (N_{Re}) time $\sqrt{f}$. FROM REFERENCE (B-1)

$$\frac{\Delta P_{Lg}}{\Delta Png} = \frac{\rho Lg}{\rho ng} \quad \frac{\bar{V}^2 Lg}{\bar{V}^2 ng}$$

Since K is only a function of the particular piping of flow system which is assumed to be the same in both cases it can be dropped yielding:

$$\frac{\Delta PLg}{\Delta Png} = \frac{\rho Lg}{\rho ng} \quad \frac{V^2 Lg}{V^2 ng} \qquad \text{(B3)}$$

where Lg refers to the low energy gas
ng refers to natural gas.

The velocity $\bar{V}$ is related to the flow rate Q of the gas by

$$V = \frac{Q}{\rho A}$$

where A is the characteristic cross-section area.

Again, assuming the same piping system hence (A) is the same for both the low energy gas and natural gas, the term

$$\frac{\Delta PLg}{\Delta Png} = \frac{\rho Lg}{\rho ng} \left[\frac{Q^2 Lg}{Q^2 ng} \quad \frac{\rho^2 ng}{\rho^2 Lg} \right]$$

or $$\frac{\Delta PLg}{\Delta Png} = \frac{\rho ng}{\rho Lg} \left[\frac{QLg}{Qng} \right]^2 \qquad \text{(B4)}$$

The term $(\frac{QLg}{Qng})$ in equation B4 is the relative flow rate of low-energy gas to natural gas either based on the fuel alone or the stoichiometric mixture and appears in Columns 3 and 4, respectively, of Table 6. The resulting relative pressure drop $(\frac{\Delta PLg}{\Delta Png})$ is shown in Columns 5 and 6 of Table 6.

Reference B-1. Unit Operations of Chemical Engineering, W.L. McCabe, J.C. Smith McGraw Hill, 1967.

TECHNICAL REPORT DATA
(Please read Instructions on the reverse before completing)

1. REPORT NO. EPA-650/2-74-052	2.	3. RECIPIENT'S ACCESSION NO.
4. TITLE AND SUBTITLE Study of Potential Problems and Optimum Opportunities in Retrofitting Industrial Processes to Low and Intermediate Energy Gas from Coal		5. REPORT DATE May 1974
		6. PERFORMING ORGANIZATION CODE
7. AUTHOR(S) D. Ball, G. Smithson, R. Engdahl, and A. Putnam		8. PERFORMING ORGANIZATION REPORT NO
9. PERFORMING ORGANIZATION NAME AND ADDRESS Battelle--Columbus Laboratories 505 King Avenue Columbus, Ohio 43201		10. PROGRAM ELEMENT NO. 1AB013; ROAP 21ADD-30
		11. CONTRACT/GRANT NO. 68-02-1323 (Task 1)
12. SPONSORING AGENCY NAME AND ADDRESS EPA, Office of Research and Development NERC-RTP, Control Systems Laboratory Research Triangle Park, NC 27711		13. TYPE OF REPORT AND PERIOD COVERED Final; Through 5/21/74
		14. SPONSORING AGENCY CODE

15. SUPPLEMENTARY NOTES

16. ABSTRACT

The report describes a study to compile background information, including environmental considerations, on the potential for retrofitting existing industrial processes to the use of low- and intermediate-energy gas from coal. Potential problems in retrofitting processes are analyzed. Processes where retrofit is most attractive are identified, along with estimates of their annual energy requirements. Also, current commercially available gasification systems and representative gas cleanup systems are described and available data summarized.

17. KEY WORDS AND DOCUMENT ANALYSIS

a. DESCRIPTORS	b. IDENTIFIERS/OPEN ENDED TERMS	c. COSATI Field/Group
Air Pollution	Air Pollution Control	13B
Coal Gasification	Stationary Sources	13H
Gas Burners	Industrial Processes	13A
Furnaces	Low-Energy Gas	
Processing	Intermediate-Energy Gas	
Gases	Gas Cleaning	07D
Desulfurization	Particulates	07A

18. DISTRIBUTION STATEMENT Unlimited	19. SECURITY CLASS *(This Report)* Unclassified	21. NO. OF PAGES 139
	20. SECURITY CLASS *(This page)* Unclassified	22. PRICE

EPA Form 2220-1 (9-73)