United States
Environmental Protection
Agency

Effluent Guidelines Division
WH-552
Washington DC 20460

EPA 440/1-82/014
October 1982

Water and Waste Management

EPA

Development Document for Effluent Limitations Guidelines and Standards for the Petroleum Refining

Final

Point Source Category

DEVELOPMENT DOCUMENT

for

EFFLUENT LIMITATIONS GUIDELINES
NEW SOURCE PERFORMANCE STANDARDS

and

PRETREATMENT STANDARDS

for the

PETROLEUM REFINING
POINT SOURCE CATEGORY

Anne M. Gorsuch
Administrator

Jeffery D. Denit
Director, Effluent Guidelines Division

Dennis Ruddy
Project Officer

October 1982

Effluent Guidelines Division
Office of Water Regulations and Standards
U.S. Environmental Protection Agency
Washington, D.C. 20460

TABLE OF CONTENTS

SECTION		PAGE
	CONTENTS	iii
	LIST OF TABLES	vii
	LIST OF FIGURES	xvii
I.	EXECUTIVE SUMMARY	1
	Summary and Conclusions	1
II.	INTRODUCTION	15
	Prior EPA Regulations	15
	Overview of the Industry	15
	Summary of Methodology	17
	Approach	18
	Industry Profile	18
	Waste Characterization	18
	Technology Evaluation	19
	Cost Development	20
III.	DESCRIPTION OF INDUSTRY	21
	Introduction	21
	Industry Profile	21
	General Description of the Industry	21
	Refinery Distribution	22
	Anticipated Industry Growth	23
	Unit Manufacturing Processes	23
	Overview of Refining Processes	23
	Process Descriptions and Wastewater Characteristics	23
	1. Crude Oil and Product Storage	24
	2. Ballast Water Storage	25
	3. Crude Desalting	25
	4. Crude Oil Fractionation	26
	5. Thermal Cracking	27
	6. Catalytic Cracking	28
	7. Hydrocracking	29
	8. Polymerization	29
	9. Alkylation	29
	10. Isomerization	30
	11. Reforming	30
	12. Solvent Refining	31
	13. Hydrotreating	32
	14. Grease Manufacturing	33
	15. Asphalt Production	34
	16. Drying and Sweetening	34
	17. Lube Oil Finishing	35
	18. Blending and Packaging	35
	19. Hydrogen Manufacture	36
	20. Utilities Function	36

TABLE OF CONTENTS
(continued)

SECTION		PAGE
IV.	INDUSTRY SUBCATEGORIZATION	61
	Introduction	61
	Selected Subcategories	61
	Purpose and Basis of Selection	62
	Flow Model for 1974 Regulation	63
	Flow Model Used for Proposed 1979 Regulations	65
	Refined Flow Model	67
V.	WASTE CHARACTERIZATION	69
	Introduction	69
	Concentration of Toxic, Conventional and Non-Conventional Pollutants	70
	1977 Survey	
	Short Term Sampling Program	71
	Long Term Sampling Program	73
	Survey of 1979 Effluent Monitoring Data	74
	Industry Flow	75
	Summary of Net Wastewater Flow	75
	Distribution of Flow by Subcategory	75
	Trends in Industry Water Usage	76
VI.	SELECTION OF POLLUTANTS TO BE REGULATED	121
	Introduction	121
	Selection of Regulated Pollutants for Direct Dischargers	121
	Pollutants Selected for Regulation in the Petroleum Refining Point Source Category (Direct Discharge Segment)	122
	Pollutants Excluded from Regulation (Direct Discharge Segment)	122
	Selection of Regulated Pollutants for Indirect Dischargers	123
	Pollutants Selected for Regulation in the Petroleum Refining Point Source Category (Indirect Discharge Segment)	124
	Pollutants Excluded from Regulation (Indirect Discharge Segment)	124
	Environmental Significance of Selected Pollutants	124
	Toxic Pollutants	124
	Conventional Pollutants	126
	Non-Conventional Pollutants	127
VII.	CONTROL AND TREATMENT TECHNOLOGY	149
	Introduction	149

TABLE OF CONTENTS
(continued)

SECTION		PAGE
VII.	CONTROL AND TREATMENT TECHNOLOGY (continued)	
	In-Plant Source Control	149
	In-Plant Treatment Options	149
	Chemical Substitution	151
	Wastewater Reduction	152
	Wastewater Reuse	153
	End-of-Pipe Treatment	155
	Biological Treatment	156
	Filtration	157
	Granular Activated Carbon	158
	Powdered Activated Carbon	158
	Cyanide Removal	160
	Metals Removal	160
	RSKERL Carbon Studies	161
	Ultimate Disposal Methods	162
	Existing Technology	164
	Effluent Concentration	165
VIII.	BEST AVAILABLE TECHNOLOGY ECONOMICALLY ACHIEVABLE	223
	Summary	223
	BAT Options Considered	224
	Identification of Best Available Technology Economically Achievable	234
IX.	NEW SOURCE PERFORMANCE STANDARDS	237
	Summary	237
	NSPS Options Considered	238
	Identification of New Source Performance Standards	240
X.	PRETREATMENT STANDARDS FOR EXISTING AND NEW SOURCES	243
	Summary	243
	Pretreatment Options Considered	244
	Identification of Pretreatment Standards for Existing and New Sources	249
XI.	ACKNOWLEDGEMENTS	251
XII.	REFERENCES	253
APPENDIX A	COSTS OF TREATMENT AND CONTROL SYSTEMS	A-1
	Introduction	A-1
	Cost of Technologies Considered	A-2
	Biological Treatment	A-2
	Filtration	A-2
	Powdered Activated Carbon	A-3
	Granular Activated Carbon	A-3
	In-Plant Control	A-4

TABLE OF CONTENTS
(continued)

SECTION		PAGE
APPENDIX A	COSTS OF TREATMENT AND CONTROL SYSTEMS (continued)	
	Cost of Technology Selected as Basis for Limitations and Standards	A-6
	BAT Options	A-6
	New Source Costs	A-10
	Pretreatment Options	A-11
APPENDIX B	RAW PLANT DATA	B-1
APPENDIX C	GLOSSARY AND ABBREVIATIONS	C-1

LIST OF TABLES

TABLE	TITLE	PAGE
I-1	Effluent Guidelines - Petroleum Refining Point Source Category Best Available Technology Economically Achievable (BAT) Process Configuration - Process Breakdown	3
I-2	Effluent Guidelines - Petroleum Refining Point Source Category Best Available Technology Economically Achievable (BAT) Size Factors by Subcategory	4
I-3	Effluent Guidelines - Petroleum Refining Point Source Category Best Available Technology Economically Achievable (BAT) Process Factors by Subcategory	5
I-4	Effluent Guidelines - Petroleum Refining Point Source Category New Source Performance Standards (NSPS) Size Factors by Subcategory	6
I-5	Effluent Guidelines - Petroleum Refining Point Source Category New Source Performance Standards (NSPS) Process Factors by Subcategory	7
I-6	Effluent Guidelines - Petroleum Refining Point Source Category Best Available Technology Achievable (BAT) Effluent Limitations by Subcategory	8
I-7	Effluent Guidelines - Petroleum Refining Point Source Category New Source Performance Standards (NSPS) Effluent Limitations by Subcategory	9
I-8	Effluent Guidelines - Petroleum Refining Point Source Category Ballast Water Standards for BAT and NSPS	10
I-9	Effluent Guidelines - Petroleum Refining Point Source Category Pretreatment Standards for Existing Sources (PSES) and New Sources (PSNS)	11
III-1	Intermediate and Finished Products Produced by Petroleum Refining Industry	41
III-2	Refining Capacity of Petroleum Refineries in the U.S. by State as of January 1, 1981	42
III-3	1980 Consumption of Petroleum Products	43

LIST OF TABLES
(Continued)

TABLE	TITLE	PAGE
III-4	Sources of Supply for U.S. Petroleum Feedstocks	44
III-5	Characteristics of Crude Oils from Major Fields Around the World	45
III-6	Trend in Domestic Petroleum Refining from 1975 to 1981	48
III-7	List of Processes Identified from the 1977 Industry Survey by EPA Process Number	49
III-8	Qualitative Evaluation of Wastewater Flow and Characteristics by Fundamental Refinery Processes	55
V-1	Summary of Plant Characteristics for 17 Refineries Sampled in Screening Program	77
V-2	Comparison of Plant Characteristics - 17 Refineries Sampled vs. Overall Industry	78
V-3	Summary of Analytical Data Petroleum Refining Industry Screening Sampling Program - Facility 1	79
V-4	Summary of Analytical Data Petroleum Refining Industry Screening Sampling Program - Facility 20	80
V-5	Summary of Analytical Data Petroleum Refining Industry Screening Sampling Program - Facility 50	81
V-6	Summary of Analytical Data Petroleum Refining Industry Screening Sampling Program - Facility 59	82
V-7	Summary of Analytical Data Petroleum Refining Industry Screening Sampling Program - Facility 64	83
V-8	Summary of Analytical Data Petroleum Refining Industry Screening Sampling Program - Facility 80	84
V-9	Summary of Analytical Data Petroleum Refining Industry Screening Sampling Program - Facility 84	85
V-10	Summary of Analytical Data Petroleum Refining Industry Screening Sampling Program - Facility 126	86
V-11	Summary of Analytical Data Petroleum Refining Industry Screening Sampling Program - Facility 153	87
V-12	Summary of Analytical Data Petroleum Refining Industry Screening Sampling Program - Facility 157, Part 1	88

LIST OF TABLES
(Continued)

TABLE	TITLE	PAGE
V-13	Summary of Analytical Data Petroleum Refining Industry Screening Sampling Program - Facility 157, Part 2	89
V-14	Summary of Analytical Data Petroleum Refining Industry Screening Sampling Program - Facility 167	90
V-15	Summary of Analytical Data Petroleum Refining Industry Screening Sampling Program - Facility 169	91
V-16	Summary of Analytical Data Petroleum Refining Industry Screening Sampling Program - Facility 186	92
V-17	Summary of Analytical Data Petroleum Refining Industry Screening Sampling Program - Facility 194	93
V-18	Summary of Analytical Data Petroleum Refining Industry Screening Sampling Program - Facility 205	94
V-19	Summary of Analytical Data Petroleum Refining Industry Screening Sampling Program - Facility 235	95
V-20	Summary of Analytical Data Petroleum Refining Industry Screening Sampling Program - Facility 241	96
V-21	Summary of Analytical Data Petroleum Refining Industry POTW Sampling Program - Facility 13	97
V-22	Summary of Analytical Data Petroleum Refining Industry POTW Sampling Program - Facility 16	98
V-23	Summary of Analytical Data Petroleum Refining Industry POTW Sampling Program - Facility 21	99
V-24	Summary of Analytical Data Petroleum Refining Industry POTW Sampling Program - Facility 25	100
V-25	Summary of Analytical Data Petroleum Refining Industry POTW Sampling Program - Facility 43	101
V-26	Summary of Analytical Data Petroleum Refining Industry POTW Sampling Program - Facility 45	102
V-27	Direct Discharge - Final Effluent Priority Pollutants - Summary of EPA Screening Program Data	103
V-28	Indirect Discharge (To POTW) Priority Pollutants - Summary of EPA Screening Program Data	106

LIST OF TABLES
(Continued)

TABLE	TITLE	PAGE
V-29	Final Effluent Priority Pollutants - Summary of EPA Regional Surveillance and Analysis Data	109
V-30	Most Frequently Occurring Priority Pollutants - Plant 1	112
V-31	Most Frequently Occurring Priority Pollutants - Plant 2	113
V-32	Potential Surrogates for Priority Pollutants - Correlation Coefficients	114
V-33	Summary of 1976 Net Wastewater Flow - By Refinery Size	115
V-34	Summary of 1976 Net Wastewater Flow - By Refinery Subcategory	116
VI-1	Flow - Weighted Concentrations and Loadings for Direct Dischargers in the Petroleum Refining Industry - Conventional Pollutants - Nonconventional Pollutants	131
VI-2	Flow - Weighted Concentrations and Loadings for Direct Dischargers in the Petroleum Refining Industry - Toxic Pollutants - Total Phenols (4AAP Method)	133
VI-3	Direct Discharge - Intake Water Priority Pollutant Detection - Summary of EPA Screening Program Data	134
VI-4	Direct Discharge - Separator Effluent Priority Pollutant Detection - Summary of EPA Screening Program Data	137
VI-5	Priority Pollutants Not Detected in Treated Effluents Discharged Directly, and Excluded from Regulation	140
VI-6	Priority Pollutants Detected in Treated Effluents Discharged Directly, but Excluded from Regulation	142
VI-7	Statistical Analysis Table for the Petroleum Refining Industry - Direct Discharge - Current/BPT	143
VI-8	Priority Pollutants Not Detected in Effluents Discharged to POTW, and Excluded from Regulation	144

LIST OF TABLES
(Continued)

TABLE	TITLE	PAGE
VI-9	Priority Pollutants Detected in Effluents Discharged to POTW, but Excluded from Regulation	145
VI-10	Statistical Analysis Table for the Petroleum Refining Industry - Indirect Discharge - Current	147
VII-1	Sour Water Treatment in Petroleum Refineries	167
VII-2	Effect of California Crudes on Reuse of Sour Waters	171
VII-3	Reuse of Sour Water - Industry Status	172
VII-4	Cooling Tower Makeup Flow Rates in the Petroleum Refining Industry	174
VII-5	Summary of Flow Reduction Techniques Used Identified by the 15 Refineries Studies During Wastewater Recycle Study	179
VII-6	Summary of Data on Removal of Cyanides with Steam Stripping and Biological Treatment in the Petroleum Refining Industry	183
VII-7	Zero Discharge Refineries	184
VII-8	Steam Electric Power Plants Using Vapor Compression Evaporation as Part of Their Wastewater Treatment System	188
VII-9	Treatment Operations and Water Usage for 1973 and 1976	189
VII-10	Summary of Treatment Technologies for 1973 and 1976	215
VII-11	Refinery Flow vs. Final Effluent Concentrations for 17 Screening Plants	216
VII-12	Effluent Concentration from 50 Plant Study	217
VII-13	Achievable Limitations Values	218
VIII-1	Diluted Effluent Concentrations from Direct Dischargers in the Petroleum Refining Industry Compared to the EPA Ambient Water Quality Criteria for the Protection of Freshwater Aquatic Life	235

LIST OF TABLES
(Continued)

TABLE	TITLE	PAGE
A-1	Raw Wastewater Equalization Systems Capital and Operating Costs	A-14
A-2	Rotating Biological Contactors (RBC's) as Roughing Systems Equipment Cost Basis and Energy Requirements	A-15
A-3	Rotating Biological Contactors (RBC's) as Roughing Filters Capital and Operating Costs	A-16
A-4	Filtration Equipment Cost Basis and Energy Requirements	A-17
A-5	Filtration Capital and Operating Costs	A-18
A-6	Powdered Activated Carbon Equipment Cost Basis and Energy Requirements, 80 mg/L Dosage Rate	A-19
A-7	Powdered Activated Carbon Capital Costs, 80 mg/L Dosage Rate	A-20
A-8	Powdered Activated Carbon Annual Operating Costs, 80 mg/L Dosage Rate	A-21
A-9	Powdered Activated Carbon Comparison of Operating Costs, Carbon Regeneration vs. Throw-Away	A-22
A-10	Powdered Activated Carbon Equipment Cost Basis and Energy Requirements Including Costs for Sludge Disposal, 80 mg/L Dosage Rate	A-23
A-11	Powdered Activated Carbon Capital Costs Including Costs for Sludge Disposal, 80 mg/L Dosage Rate	A-24
A-12	Powdered Activated Carbon Annual Operating Costs Including Credit for Sludge Disposal, 80 mg/L Dosage Rate	A-25
A-13	Powdered Activated Carbon Equipment Cost Basis and Energy Requirements, 150 mg/L Dosage Rate	A-26
A-14	Powdered Activated Carbon Capital Costs, 150 mg/L Dosage Rate	A-27
A-15	Powdered Activated Carbon Annual Operating Costs, 150 mg/L Dosage Rate	A-28

LIST OF TABLES
(Continued)

TABLE	TITLE	PAGE
A-16	PACT Comparison of Operating Costs, Carbon Regeneration vs. Throw-Away, 150 mg/L Dosage Rate	A-29
A-17	Powdered Activated Carbon Equipment Cost Basis and Energy Requirements Including Costs, for Sludge Disposal, 150 mg/L Dosage Rate	A-30
A-18	Powdered Activated Carbon Capital Costs Including Costs for Sludge Disposal, 150 mg/L Dosage Rate	A-31
A-19	Powdered Activated Carbon Annual Operating Costs Including Credit for Sludge Disposal, 150 mg/L Dosage Rate	A-32
A-20	Granular Activated Carbon Equipment Cost Basis and Energy Requirements	A-33
A-21	Granular Activated Carbon Capital Costs	A-34
A-22	Granular Activated Carbon Annual Operating Costs	A-35
A-23	Supplemental Economic Cost Information Capital and Operating Costs for 10,000 Gallon per Day Treatment Systems	A-36
A-24	Cooling Tower Blowdown Rates Petroleum Refining Industry (Million Gallons per Day)	A-37
A-25	Chromium Removal Systems Equipment Cost Basis and Energy Requirements	A-38
A-26	Chromium Removal Systems Capital and Operating Costs	A-39
A-27	Wastewater Recycle Capital and Operating Costs	A-40
A-28	Water Softening of Recycled Wastewater Capital Costs	A-41
A-29	Capital and Operating Costs by Refinery Number	A-42
A-30	Capital and Operating Costs, Indirect Discharge - Option 1	A-47
A-31	Capital and Operating Costs, Indirect Discharge - Option 2	A-50

LIST OF TABLES
(Continued)

TABLE	TITLE	PAGE
B-1	Analytical Results for Traditional Parameters for the RSKERL and B&R Sampling Program	B-2
B-2	Analytical Results for Priority Pollutants for the RSKERL and B&R Sampling Program - Volatile Organics	B-9
B-3	Analytical Results for Priority Pollutants for the RSKERL and B&R Sampling Program - Semivolatile Organics	B-12
B-4	Analytical Results for Priority Pollutants for the RSKERL and B&R Sampling Program - Pesticides	B-17
B-5	Analytical Results for Priority Pollutants for the RSKERL and B&R Sampling Program - Cyanides, Phenolics and Mercury	B-20
B-6	Analytical Results for Priority Pollutants for the RSKERL and B&R Sampling Program - Metals	B-30
B-7	Analytical Results for Traditional Parameters in the Pretreatment Sampling Program - Week 1	B-36
B-8	Analytical Results for Priority Pollutants for the Pretreatment Sampling Program - Week 1, Volatile Organics	B-37
B-9	Analytical Results for Priority Pollutants for the Pretreatment Sampling Program - Week 1, Semivolatile Organics	B-38
B-10	Analytical Results for Priority Pollutants for the Pretreatment Sampling Program - Week 1, Pesticides	B-40
B-11	Analytical Results for Priority Pollutants for the Pretreatment Sampling Program - Week 1, Metals	B-41
B-12	Analytical Results for Priority Pollutants for the Pretreatment Sampling Program - Week 2	B-42
B-13	Analytical Results for Priority Pollutants for the Pretreatment Sampling Program - Week 2, Volatile Organics	B-43

LIST OF TABLES
(Continued)

TABLE	TITLE	PAGE
B-14	Analytical Results for Priority Pollutants for the Pretreatment Sampling Program - Week 2, Semivolatile Organics	B-45
B-15	Analytical Results for Priority Pollutants for the Pretreatment Sampling Program - Week 2, Pesticides	B-48
B-16	Analytical Results for Priority Pollutants for the Pretreatment Sampling Program - Week 2, Metals	B-49

LIST OF FIGURES

FIGURE	TITLE	PAGE
I-1	Effluent Guidelines - Petroleum Refining Point Source Category Best Available Technology Economically Achievable Sample Calculation - Process Factor	13
III-1	Geographical Distribution of Petroleum Refineries in the United States, as of January 1, 1981	56
III-2	Crude Desalting (Electrostatic Desalting)	57
III-3	Crude Fractionation (Crude Distillation, Three Stages)	58
III-4	Catalytic Cracking (Fluid Catalytic Cracking)	59
V-1	Histogram of Net Wastewater Flow by Size Class	117
V-2	Histogram of Net Wastewater Flow by Subcategory	118
V-3	Historical Trend of Total Industry Water Usage	119
VII-1	Rotating Biological Contactors	219
VII-2	Flow Diagram of a Granular Activated Carbon System	220
VII-3	Carbon Regeneration System	221
VII-4	Flow Diagram of One Powdered Activated Carbon Treatment Scheme	222

SECTION I

EXECUTIVE SUMMARY

SUMMARY AND CONCLUSIONS

This development document presents the technical data base developed by EPA to support effluent limitations and standards for the Petroleum Refining Point Source Category. Technologies covered by this document to achieve these limitations and standards are defined as best available technology economically achievable (BAT), best available demonstrated technology (BADT, equal to new source performance standards NSPS), pretreatment standards for existing sources (PSES), and pretreatment standards for new sources (PSNS). Best conventional pollutant control technology (BCT) limitations are not addressed in this document because the Agency has reserved coverage of BCT for future rulemaking. Best practicable technology currently available (BPT) is not being revised and therefore will not be addressed in this document. The basis for BPT can be found in an earlier document (EPA-440/1-74-014a). This document outlines the technology options considered and the rationale for selecting the technology levels on which pollutant limitations are based.

EPA is promulgating BAT effluent limitations guidelines equivalent to BPT, which were promulgated on May 9, 1974 (39 FR 16560) and amended May 20, 1975 (40 FR 21939).

EPA decided to retain the New Source Performance Standards (NSPS) that were promulgated May 9, 1974 (39 FR 16560).

Interim final pretreatment standards for existing sources (PSES) were promulgated on March 23, 1977 (42 FR 15684). Pretreatment standards for new sources (PSNS) were promulgated on May 9, 1974 (39 FR 16560). This document presents the final PSES and PSNS promulgated, both of which are revision to the prior pretreatment standards for this industry. Pretreatment standards for both existing and new sources (PSES and PSNS) will limit ammonia and oil and grease at 100 mg/l, each. An alternate mass - based ammonia standard is also provided. In addition, PSNS contains a chromium mass limitation based upon the application of a 1 mg/l standard to the cooling tower discharge portion of the total refinery flow to the POTW.

Stormwater runoff is not addressed in this document. The 1974 development document presented BPT, BAT, and NSPS for stormwater run off. These limitations were remanded for reconsideration by the U.S. Court of Appeals on August 11, 1976. These requirements were reserved by the Agency for future rulemaking.

Effluent limitations guidelines for conventional pollutants (BOD_5, TSS, oil and grease, and pH) will be promulgated

separately as BCT limitations for existing direct dischargers in this category in future rulemaking.

The tables in this section summarize the final promulgated regulations.

Table I-1 lists the processes used in the determination of process categories and their associated weighting factors as used to determine process configurations. Tables I-2 and I-3 list the BAT size factors and process factors, respectively, while Tables I-4 and I-5 list the same factors as applied to NSPS. Tables I-6 and I-7 summarize effluent limitations by subcategory for BAT and NSPS. These effluent limitations are to be used in conjunction with the process factors and size factors determined in the preceeding tables to calculate actual mass limitations applicable to individual refineries. Table I-8 summarizes the ballast water allowance applicable to both BAT and NSPS. Table I-9 contains the general and specific pretreatment limitations applicable to PSES and PSNS for indirect dischargers.

A sample calculation of BAT effluent limitations is provided in Figure I-1. The reader should note that the BPT model uses only crude processes, cracking processes, lube processes, and asphalt processes for the calculation of the process factor (Table I-1). Moreover, the factors for process configuration and size shown in Tables I-2 through I-5 are discrete factors (do not permit interpolated, intermediate values) which apply to all refineries within a given range and subcategory.

Implementation of BAT, NSPS and PSES would incur no additional cost to the industry beyond existing requirements. A single new indirect discharging refinery of the type and size likely to be built in the 1980's and subject to PSNS would incur an additional capital cost of $0.39 million and an annual cost of $0.26 million (1979 dollars).

TABLE I-1

EFFLUENT GUIDELINES
PETROLEUM REFINING POINT SOURCE CATEGORY
BEST AVAILABLE TECHNOLOGY ECONOMICALLY ACHIEVABLE (BAT)
PROCESS CONFIGURATION - PROCESS BREAKDOWN

Process Category	Processes Included	Weighting Factor
Crude	desalting atmospheric distillation vacuum distillation	1
Cracking and Coking	fluid catalytic cracking thermofor houdriflow gas-oil cracking visbreaking fluid coking delayed coking	6
Lube	lube hydrofining white oil manufacturing propane - dewaxing, deasphalting duo sol, solvent dewaxing lube vac. tower, wax fract. centrifuging and chilling MEK dewaxing deoiling (wax) naphthenic lubes SO2 extraction wax pressing wax plant (with neutral separ.) furfural extraction clay contacting - percolation wax sweating acid treating phenol extraction	13
Asphalt	asphalt production asphalt oxidation asphalt emulsifying	12

TABLE I-2

EFFLUENT GUIDELINES

PETROLEUM REFINING POINT SOURCE CATEGORY

BEST AVAILABLE TECHNOLOGY ECONOMICALLY ACHIEVABLE (BAT)

	Size Factors By Subcategory:				
	Topping:	Cracking:	Petrochemical:	Lube:	Integrated:
1,000 Barrels of Feedstock Per Stream - Day	Size Factor	Size Factor	Size Factor	Size Factor	Size Factor
Less than 24.9	1.02	0.91	0.73	0.71	0.73
25.0 to 49.9	1.06	0.95	0.76	0.71	0.73
50.0 to 74.9	1.16	1.04	0.83	0.74	0.73
75.0 to 99.9	1.26	1.13	0.91	0.81	0.73
100.0 to 124.9	1.38	1.23	0.99	0.88	0.73
125.0 to 149.9	1.50	1.35	1.08	0.97	0.76
150.0 to 174.9	1.57	1.41	1.13	1.05	0.83
175.0 to 199.9	1.57	1.41	1.13	1.14	0.91
200.0 to 224.9	1.57	1.41	1.13	1.19	0.99
225.0 or greater	1.57	1.41	1.13	1.19	1.04

TABLE I-3

EFFLUENT GUIDELINES

PETROLEUM REFINING POINT SOURCE CATEGORY

BEST AVAILABLE TECHNOLOGY ECONOMICALLY ACHIEVABLE (BAT)

	Process Factors By Subcategory:				
Process Configuration	Topping: Process Factor	Cracking: Process Factor	Petrochemical: Process Factor	Lube: Process Factor	Integrated: Process Factor
Less than 2.49	0.62	0.58	0.73	0.81	0.75
2.5 to 3.49	0.67	0.63	0.73	0.81	0.75
3.5 to 4:49	0.80	0.74	0.73	0.81	0.75
4.5 to 5.49	0.95	0.88	0.80	0.81	0.75
5.5 to 5.99	1.07	1.00	0.91	0.81	0.75
6.0 to 6.49	1.17	1.09	0.99	0.81	0.75
6.5 to 6.99	1.27	1.19	1.08	0.88	0.82
7.0 to 7.49	1.39	1.29	1.17	0.88	0.82
7.5 to 7.99	1.51	1.41	1.28	1.00	0.92
8.0 to 8.49	1.64	1.53	1.39	1.09	1.00
8.5 to 8.99	1.79	1.67	1.51	1.19	1.10
9.0 to 9.49	1.95	1.82	1.65	1.29	1.20
9.5 to 9.99	2.12	1.89	1.72	1.41	1.30
10.0 to 10.49	2.31	1.89	1.72	1.53	1.42
10.5 to 10.99	2.51	1.89	1.72	1.67	1.54
11.0 to 11.49	2.73	1.89	1.72	1.82	1.68
11.5 to 11.99	2.98	1.89	1.72	1.98	1.83
12.0 to 12.49	3.24	1.89	1.72	2.15	1.99
12.5 to 12.99	3.53	1.89	1.72	2.34	2.17
13.0 to 13.49	3.84	1.89	1.72	2.44	2.26
13.5 to 13.99	4.18	1.89	1.72	2.44	2.26
14.0 or greater	4.36	1.89	1.72	2.44	2.26

TABLE I-4

EFFLUENT GUIDELINES

PETROLEUM REFINING POINT SOURCE CATEGORY

NEW SOURCE PERFORMANCE STANDARDS (NSPS)

	Size Factors By Subcategory:				
	Topping:	Cracking:	Petrochemical:	Lube:	Integrated:
1,000 Barrels of Feedstock Per Stream - Day	Size Factor	Size Factor	Size Factor	Size Factor	Size Factor
Less than 24.9	1.02	0.91	0.73	0.71	0.73
25.0 to 49.9	1.06	0.95	0.76	0.71	0.73
50.0 to 74.9	1.16	1.04	0.83	0.74	0.73
75.0 to 99.9	1.26	1.13	0.91	0.81	0.73
100.0 to 124.9	1.38	1.23	0.99	0.88	0.73
125.0 to 149.9	1.50	1.35	1.08	0.97	0.76
150.0 to 174.9	1.57	1.41	1.13	1.05	0.83
175.0 to 199.9	1.57	1.41	1.13	1.14	0.91
200.0 to 224.9	1.57	1.41	1.13	1.19	0.99
225.0 or greater	1.57	1.41	1.13	1.19	1.04

TABLE I-5

EFFLUENT GUIDELINES

PETROLEUM REFINING POINT SOURCE CATEGORY

NEW SOURCE PERFORMANCE STANDARDS (NSPS)

	Process Factors By Subcategory:				
Process Configuration	Topping: Process Factor	Cracking: Process Factor	Petrochemical: Process Factor	Lube: Process Factor	Integrated: Process Factor
Less than 2.49	0.62	0.58	0.73	0.81	0.75
2.5 to 3.49	0.67	0.63	0.73	0.81	0.75
3.5 to 4.49	0.80	0.74	0.73	0.81	0.75
4.5 to 5.49	0.95	0.88	0.80	0.81	0.75
5.5 to 5.99	1.07	1.00	0.91	0.81	0.75
6.0 to 6.49	1.17	1.09	0.99	0.81	0.75
6.5 to 6.99	1.27	1.19	1.08	0.88	0.82
7.0 to 7.49	1.39	1.29	1.17	0.88	0.82
7.5 to 7.99	1.51	1.41	1.28	1.00	0.92
8.0 to 8.49	1.64	1.53	1.39	1.09	1.00
8.5 to 8.99	1.79	1.67	1.51	1.19	1.10
9.0 to 9.49	1.95	1.82	1.65	1.29	1.20
9.5 to 9.99	2.12	1.89	1.72	1.41	1.30
10.0 to 10.49	2.31	1.89	1.72	1.53	1.42
10.5 to 10.99	2.51	1.89	1.72	1.67	1.54
11.0 to 11.49	2.73	1.89	1.72	1.82	1.68
11.5 to 11.99	2.98	1.89	1.72	1.98	1.83
12.0 to 12.49	3.24	1.89	1.72	2.15	1.99
12.5 to 12.99	3.53	1.89	1.72	2.34	2.17
13.0 to 13.49	3.84	1.89	1.72	2.44	2.26
13.5 to 13.99	4.18	1.89	1.72	2.44	2.26
14.0 or greater	4.36	1.89	1.72	2.44	2.26

TABLE I-6

EFFLUENT GUIDELINES

PETROLEUM REFINING POINT SOURCE CATEGORY

BEST AVAILABLE TECHNOLOGY ECONOMICALLY ACHIEVABLE (BAT)

Effluent Limitations By Subcategory:(1)(2)

Effluent Characteristics	Topping: Maximum For Any One Day	Topping: Average of Daily Values For thirty Consecutive Days Shall Not Exceed	Cracking: Maximum For Any One Day	Cracking: Average Of Daily Values For Thirty Consecutive Days Shall Not Exceed	Petrochemical: Maximum For Any One Day	Petrochemical: Average of Daily Values For Thirty Consecutive Days Shall Not Exceed	Lube: Maximum For Any One Day	Lube: Average of Daily Values For Thirty Consecutive Days Shall Not Exceed	Integrated: Maximum For Any One Day	Integrated: Average of Daily Values For Thirty Consecutive Days Shall Not Exceed
Metric Units: kilograms per thousand cubic meters of feedstock (kg/1,000 m^3)										
COD(3)	117.0	60.3	210.0	109.0	210.0	109.0	360.0	187.0	388.0	198.0
Phenolic Compounds	0.168	0.076	0.21	0.1	0.25	0.12	0.38	0.184	0.4	0.192
Ammonia as N	2.81	1.27	18.8	8.5	23.4	10.6	23.4	10.6	23.4	10.6
Sulfide	0.149	0.068	0.18	0.082	0.22	0.099	0.33	0.15	0.35	0.158
Total Chromium	0.345	0.2	0.43	0.25	0.52	0.3	0.77	0.45	0.82	0.48
Hexavalent Chromium	0.028	0.012	0.035	0.016	0.046	0.02	0.068	0.03	0.068	0.032
English Units: pounds per thousand barrels of feedstock (lb/1,000(bbl)										
COD(3)	41.2	21.3	74.0	38.4	74.0	38.4	127.0	66.0	136.0	70.0
Phenolic Compounds	0.06	0.027	0.074	0.036	0.088	0.0425	0.133	0.065	0.14	0.068
Ammonia as N	0.99	0.45	6.6	3.0	8.25	3.8	8.3	3.8	8.3	3.8
Sulfide	0.053	0.024	0.065	0.029	0.078	0.035	0.118	0.053	0.124	0.056
Total Chromium	0.122	0.071	0.15	0.088	0.183	0.107	0.273	0.16	0.29	0.17
Hexavalent Chromium	0.10	0.0044	0.012	0.0056	0.016	0.0072	0.024	0.011	0.025	0.011

(1) To obtain actual limitations all values in this table must be multiplied by a subcategory dependent variable, F; where F is the product of the process factor and the size factor and the crude throughput (in thousand barrels per day).

(2) Once-through cooling water may be discharged with a total organic carbon (TOC) concentration not to exceed 5 mg/L.

(3) In any case in which the applicant can demonstrate that the chloride ion concentration in the effluent exceeds 1,000 mg/l (1,000 ppm), the Regional Administrator may substitute TOC as a parameter in lieu of COD. Effluent limitations for TOC shall be based on effluent data from the plant correlating TOC to BOD_5.

If in the judgement of the Regional Administrator, adequate correlation data are not available, the effluent limitations for TOC shall be established at a ratio of 2.2 to 1 to the applicable effluent limitations on BOD_5.

TABLE I-7

EFFLUENT GUIDELINES
PETROLEUM REFINING POINT SOURCE CATEGORY
NEW SOURCE PERFORMANCE STANDARDS (NSPS)
Effluent Limitations By Subcategory:(1)(2)

Effluent Characteristics	Topping: Maximum For Any One Day	Topping: Average of Daily Values For thirty Consecutive Days Shall Not Exceed	Cracking: Maximum For Any One Day	Cracking: Average Of Daily Values For Thirty Consecutive Days Shall Not Exceed	Petrochemical: Maximum For Any One Day	Petrochemical: Average of Daily Values For Thirty Consecutive Days Shall Not Exceed	Lube: Maximum For Any One Day	Lube: Average of Daily Values For Thirty Consecutive Days Shall Not Exceed	Integrated: Maximum For Any One Day	Integrated: Average of Daily Values For Thirty Consecutive Days Shall Not Exceed
Metric Units: kilograms per thousand cubic meters of feedstock (kg/1,000 m^3)										
BOD_5	11.8	6.3	16.3	8.7	21.8	11.6	34.6	18.4	41.6	22.1
TSS	8.3	4.9	11.3	7.2	14.9	9.5	23.4	14.9	28.1	17.9
COD(3)	61.0	32.0	118.0	61.0	133.0	69.0	245.0	126.0	295.0	152.0
Oil and Grease	3.6	1.9	4.8	2.6	6.6	3.5	10.5	5.6	12.6	6.7
Phenolic Compounds	0.088	0.043	0.119	0.058	0.158	0.077	0.25	0.12	0.3	0.14
Ammonia as N	2.8	1.3	18.8	8.6	23.4	10.7	23.4	10.7	23.4	10.7
Sulfide	0.078	0.035	0.105	0.048	0.14	0.063	0.22	0.1	0.26	0.12
Total Chromium	0.18	0.105	0.24	0.14	0.32	0.19	0.52	0.31	0.64	0.37
Hexavalent Chromium	0.015	0.0068	0.02	0.0088	0.025	0.012	0.046	0.021	0.052	0.024
English Units: pounds per thousand barrels of feedstock (lb/1,000(bbl)										
BOD_5	4.2	2.2	5.8	3.1	7.7	4.1	12.2	6.5	14.7	7.8
TSS	3.0	1.9	4.0	2.5	5.2	3.3	8.3	5.3	9.9	6.3
COD(3)	21.7	11.2	41.5	21.0	47.0	24.0	87.0	45.0	104.0	54.0
Oil and Grease	1.3	0.7	1.7	0.93	2.4	1.3	3.8	2.0	4.5	2.4
Phenolic Compounds	0.031	0.016	0.042	0.02	0.056	0.027	0.088	0.043	0.105	0.51
Ammonia as N	1.0	0.45	6.6	3.0	8.3	3.8	8.3	3.8	8.3	3.8
Sulfide	0.027	0.012	0.037	0.017	0.05	0.022	0.078	0.035	0.093	0.042
Total Chromium	0.064	0.037	0.084	0.049	0.116	0.068	0.18	0.105	0.22	0.13
Hexavalent Chromium	0.0052	0.0025	0.0072	0.0032	0.0096	0.0044	0.022	0.0072	0.019	0.0084

(1) To obtain actual limitations all values in this table must be multiplied by a subcategory dependent variable, F; where F is the product of the process factor and the size factor and the crude throughput (in thousand barrels per day).

(2) Once-through cooling water may be discharged with a total organic carbon (TOC) concentration not to exceed 5 mg/l.

(3) In any case in which the applicant can demonstrate that the chloride ion concentration in the effluent exceeds 1,000 mg/l (1,000 ppm), the Regional Administrator may substitute TOC as a parameter in lieu of COD. Effluent limitations for TOC shall be based on effluent data from the plant correlating TOC to BOD_5.

If in the judgement of the Regional Administrator, adequate correlation data are not available, the effluent limitations for TOC shall be established at a ratio of 2.2 to 1 to the applicable effluent limitations on BOD_5.

TABLE I-8

EFFLUENT GUIDELINES

PETROLEUM REFINING POINT SOURCE CATEGORY

BALLAST WATER TREATMENT STANDARDS FOR

BAT AND NSPS. FOR ALL SUBCATEGORIES

	Pollutant or Pollutant Property	Maximum For Any One Day	Average of Daily Values for 30 Consecutive Days
Metric Units (Kilograms per cubic meter of flow)	COD[-1]	0.47	0.24
English Units (Pounds per 1,000 gal of flow)	COD[-1]	3.9	2.0

1- In any case in which the applicant can demonstrate that the chloride ion concentration in the effluent exceeds 1,000 mg/l (1,000 ppm), the regional Administrator may substitute TOC as a parmeter in lieu of COD. Effluent limitations for TOC shall be based on effluent data from the plant correlating TOC to BOD_5.

If in the judgement of the Regional Administrator, adequate correlation data are not available, the effluent limitations for TOC shall be established at a ratio of 2.2 to 1 to the applicable effluent limitations on BOD_5.

TABLE I-9

EFFLUENT GUIDELINES

PETROLEUM REFINING POINT SOURCE CATEGORY
PRETREATMENT STANDARDS FOR EXISTING SOURCES (PSES)
AND NEW SOURCES (PSNS)

A. General Prohibitions

Pollutants introduced into POTW by a non-domestic source shall not pass through the POTW or interfere with the operation or performance of the works. These general prohibitions and the specific prohibitions in paragraph B of this section apply to all non-domestic sources introducing pollutants into a POTW whether or not the source is subject to other National Pretreatment Standards or any national, state, or local pretreatment requirements.

B. Specific Prohibitions

In addition, the following pollutants shall not be introduced into a POTW:

1) Pollutants which create a fire or explosion hazard in the POTW;

2) Pollutants which will cause corrosive structural damage to the POTW, but in no case Discharges with pH lower than 5.0, unless the works are specifically designed to accommodate such Discharges;

3) Solid or viscous pollutants in amounts which will cause obstruction to the flow in the POTW resulting in interference;

4) Any pollutant, including oxygen demanding pollutants (BOD, etc.) released in a discharge at a flow rate and/or pollutant concentration which will cause interference with the POTW;

5) Heat in amounts which will inhibit biological activity in the POTW resulting in interference, but in no case heat in such quantities that the temperature at the POTW treatment plant exceeds 40°C (104°F) unless the approval authority, upon request of the POTW, approves alternate temperature limits.

TABLE I-9

EFFLUENT GUIDELINES

PETROLEUM REFINING POINT SOURCE CATEGORY
PRETREATMENT STANDARDS FOR EXISTING SOURCES (PSES)
AND NEW SOURCES (PSNS)
(continued)

C. Categorical Pretreatment Standards

1) Maximum Pollutant Concentrations for Any One Day (All Indirect Dischargers)

Pollutant or Pollutant Property	Pretreatment Standard for Existing and New Sources Maximum for Any One Day Milligrams per Liter (mg/L)
Oil and Grease	100
Ammonia	100 *

* Where the discharge to the POTW consists solely of sour waters, the owner or operator has the option of complying with this limit or the daily mass limitation set forth in the BAT or NSPS standards for existing or new sources, respectively.

2) Maximum Pollutant Concentration For Any One Day (new source indirect dischargers)

The following standard is applied to the cooling tower discharge part of the total refinery flow to the POTW by mutliplying: (1) the standards; (2) the total refinery flow to the POTW; and (3) the ratio of the cooling tower discharge flow to the total refinery flow.

Pollutant or Pollutant Property	Pretreatment Standard for New Sources Only Maximum for Any One Day Milligrams per Liter (mg/L)
Total Chromium	1

FIGURE I-1

EFFLUENT GUIDELINES
PETROLEUM REFINING POINT SOURCE CATEGORY
BEST AVAILABLE TECHNOLOGY ECONOMICALLY ACHIEVABLE
SAMPLE CALCULATION - PROCESS FACTOR

Step 1: Determine subcategory and size of the refinery (the example refinery is a lube facility with 125,000 bbl/day throughout).

Step 2: Obtain information on capacity of processes listed in Table I-1 from the refinery.

Step 3: Calculate process configuration factor as follows: (the processes and their associated capacities below are for the example refinery).

Process	Process capacity (1,000 bbl/day)	Capacity of process in relation to refinery throughput*		Process weighting factor (from Table I-1)		Process configuration factor
crude-ATM	125	1.0				
vacuum	60	0.48				
desalting	125	1.0				
		2.48	x	1	=	2.48
cracking-FCC	41	0.328				
hydrocracking	20	0.160				
		0.488	x	6	=	2.93
lubes hydro-fining	5.3	0.042				
furfural extraction	4.0	0.032				
phenol extraction	4.0	0.032				
		0.106	x	13	=	1.38
asphalt	4.0	0.032	x	12	=	0.38
		Process configuration factor:				7.17

*Divide process capacity by refinery throughput.
In most cases, refinery throughput is equal to the crude capacity.

FIGURE I-1 (Cont'd)

Step 4: Determine process factor by looking at Table I-3 (for BAT). For process configuration of 7.17 in the lube subcategory, the process factor is 0.88.

Step 5: Determine size factor by looking at Table I-2 (for BAT). For a lube refinery with throughput of 125,000 bbl/day, the size factor is 0.97.

Step 6: Obtain unadjusted effluent limitations from Table I-6 for BAT. This example calculation computes the 30-day daily average COD (in units of lb/mbbl of feedstock). The COD value is 66 lb/mbbl (30-day).

Step 7: Calculate limitation for COD by multiplying the process factor (from Step 4), the size factor (from Step 5), the effluent limit (from Step 6), and refinery throughput (Step 1).

0.88 (process factor) x 0.97 (size factor) x 66 lb/mbbl (unadjusted effluent limitation) x 125 mbbl = 7042 lb/day of COD (30-day daily average limit).

SECTION II

INTRODUCTION

This development document details the technical basis for the Agency's BAT, NSPS, PSES, and PSNS for the petroleum refining industry. These limitations and standards are promulgated under authority of Sections 301, 304, 306, 307, and 501 of the Clean Water Act (the Federal Water Pollution Control Act Amendments of 1972, 33 USC 1251 et seq., as amended by the Clean Water Act of 1977, P.L. 95-217) also called the "Act". The regulation was also promulgated in response to the Settlement Agreement in Natural Resources Defense Council, Inc. v. Train, 8 ERC 2120 (D.D.C. 1976), modified, 12 ERC 1833 (D.D.C. 1979) and in response to the decision of the United States Court of Appeals in American Petroleum Institute v. EPA, 540 F.2d 1023 (10th Cir. 1976).

PRIOR EPA REGULATIONS

EPA promulgated BPT, BAT, NSPS and PSNS for the petroleum refining industry on May 9, 1974 (39 FR 16560, Subparts A-E). A development document was published in April 1974 (EPA-440/1-74-014a). This document provided the bases for the 1974 regulation and is henceforth referred to as the 1974 Development Document. BPT and BAT limitations and NSPS were challenged in the U.S. Court of Appeals for the Tenth Circuit by the American Petroleum Institute and others. The court upheld both BPT limitations and NSPS, but remanded BAT limitations, in toto, for further consideration. Storm water regulations under BPT, BAT and NSPS were set aside by the court in the same action. Interim final PSES were promulgated on March 23, 1977 (42 FR 15684).

OVERVIEW OF THE INDUSTRY

The petroleum refining industry is defined by Bureau of the Census Standard Industrial Classification (SIC) 2911. The raw material of this industry is primarily petroleum material (generally, but not always, crude oil). Petroleum refineries process this raw material into a wide wariety of petroleum products, including gasoline, residual fuel oil, jet fuel, heating oils and gases, and petrochemicals. Refining includes a wide variety of physical separation and chemical reaction processes. Because of the diversity and complexity of the processes used and the products produced, petroleum refineries are generally characterized by the quantity of raw material processed, rather than by the quantity and types of products produced.

EPA has identified 285 petroleum refineries in the United States and its possessions. The smallest refinery can refine fifty

barrels of oil per day (one barrel equals 42 gallons), while the largest can refine 665,000 barrels per day.

The U.S. refining industry has experienced a dramatic reversal of historical growth trends as a result of the reduction in consumption of petroleum products that has taken place since 1978. U.S. crude oil runs peaked at 14.7 million barrels per day in the calendar year 1978. Runs have decreased each year since then reaching 12.5 million barrels per day for the calendar year 1981. In early 1982 runs have dropped to below 11.5 million barrels per day representing percentage capacity utilizations in the low 60's. More than fifty plants have discontinued operations in the U.S. over the past year. It is expected that U.S. refinery activity will recover somewhat. The 1981 DOE Annual Report to Congress projects U.S. crude runs at 14.4 million barrels per day in 1985 and 13.4 million barrels per day in 1990 for their mid-oil price scenarios. The above forecasts of U.S. refinery activity indicate that very little, if any, new refinery facilities will be built at undeveloped sites over the next decade. However, it will be necessary for U.S. refineries to modernize and expand downstream facilities at existing refinery sites to allow increasingly heavier and higher sulfur crude oils to be processed into a product mix which emphasizes production of the lighter and higher quality products that will be demanded by the marketplace.

Since its inception, the U.S. refining industry has continued to build bigger and more efficient plants as new technology has developed over time. The average U.S. refinery capacity per plant increased from 43.3 thousand barrels per day to 55.6 thousand barrels per day from January 1, 1967, to January 1, 1973. This trend was halted in the late 1970's in response to the DOE "small refiner bias" provision of the crude oil entitlements program. This provision encouraged the construction of small, inefficient plants which offset the technological improvements created by expanding existing, larger refineries. 53 additional U.S. refineries were in operation on January 1, 1981 versus January 1, 1975. The number of plants in operation with capacity greater than 100 thousand barrels per day increased by only seven (from 46 to 53) over this time period. Most of the new plants placed in operation were small. Average U.S. refinery capacity increased only from 56.0 to 57.3 thousand barrels per day from January 1, 1975, to January 1, 1981. Many of the small new plants built in this time period are among the fifty that have discontinued operations during the last year.

The four major sources of process wastewater are cooling water, water used to wash unwanted materials from a process stream, water used as part of a reaction process, and boiler blowdowns. Current treatment systems used by refineries for this process wastewater include (a) in-plant controls of water use; (b) in-plant treatment of segregated wastestreams for ammonia and sulfide removal via steam stripping; and (c) end-of-pipe

treatment, consisting of oil/water separators, biological treatment and, in some cases, mixed media filtration. Although significant concentrations of toxic and other pollutants are found in untreated waste, data from an EPA sampling program of seventeen refineries show that application of BPT substantially reduces the concentrations of pollutants (See Sections V and VI for details of sampling programs). Toxic pollutants were reduced to near or below the concentrations that can be accurately measured using available measurement techniques.

SUMMARY OF METHODOLOGY

On December 27, 1977, the President signed into law the Clean Water Act of 1977. Although this law makes several important changes in the Federal water pollution control program, its most significant feature is the incorporation of several of the basic elements of the Settlement Agreement program for toxic pollution control. Sections 301(b)(2)(A) and 301(b)(2)(C) of the Act now require the achievement by July 1, 1984, of effluent limitations reflecting BAT for toxic pollutants, including the 65 pollutants and classes of pollutants which Congress declared toxic under Section 307(a). Likewise, the Agency's programs for new source performance standards and pretreatment standards are now aimed principally at toxic pollutant controls. Moreover, to strengthen the toxics control program, Section 304(e) of the Act now authorizes the Administrator to prescribe "best management practices" ("BMPs") to prevent the release of toxic and hazardous pollutants from plant site runoff, spillage or leaks, sludge or waste disposal, and drainage from raw material storage associated with, or ancillary to, the manufacturing or treatment process.

In keeping with its emphasis on toxic pollutants, the Clean Water Act of 1977 also revised the control program for non-toxic pollutants. Instead of BAT for "conventional" pollutants identified under Section 304(a)(4) (including biochemical oxygen demand, total suspended solids, fecal coliform, oil and grease and pH), the new Section 301(b)(2)(E) requires achievement by July 1, 1984, of "effluent limitations requiring the application of the best conventional pollutant control technology" ("BCT"). BCT is not an additional limitation but replaces BAT for the control of conventional pollutants. In addition to other factors specified in section 304(b)(4)(B), the Act requires the BCT limitations be assessed in light of a two part "cost-reasonableness" test. American Paper Institute v. EPA, 660 F2d 954 (4th Cir. 1981). The first test compares the cost for private industry to reduce its conventional pollutants with the costs to publicly owned treatment works for similar levels of reduction in their discharge of these pollutants. The second test examines the cost-effectiveness of additional industrial treatment beyond BPT. EPA must find that limitations are "reasonable" under both tests before establishing them as BCT. In no case may BCT be less stringent than BPT. For non-toxic, nonconventional pollutants, Sections 301(b)(2)(A) and (b)(2)(F)

require achievement of BAT effluent limitations within three years after their establishment or by July 1, 1984, whichever is later, but not later than July 1, 1987.

APPROACH

The emphasis of this regulatory development effort differs from the one in 1974 because of legislative changes.

Despite the major revisions described above, the basic factors to be considered in developing effluent limitation guidelines and standards of performance remain unchanged. These include the total cost of applying a technology; effluent reduction benefits realized; the age of equipment and facilities; the process employed; the engineering aspects of applying various types of control techniques and process changes; nonwater-quality environmental related impacts (including energy requirements); and other factors as the Administrator deems appropriate.

Efforts to compile the necessary information to address the statutory factors mentioned above were divided into four segments: industry profile, waste characterization, technology assessment, and cost development. These efforts are briefly described below.

Industry Profile

To update the information needed to establish effluent guidelines for the petroleum refining category, EPA sent questionnaires to all refineries in the United States and its territorial possessions. The surveys were made under Section 308 of the Clean Water Act. The information obtained describes the petroleum refining industry wastewater treatment practices for the year 1976.

Information from these surveys was combined with existing information to develop an industry profile, including number of plants, their size, geographic location, manufacturing processes, wastewater generation, treatment, and discharge methods. Information on number, size, and geographical location of refineries was later updated with 1980 data from the U.S. Department of Energy (DOE). Questionnaire data aided in the final selection of plants for other aspects of this program. Flow data from the questionnaires was used to develop a flow model for the analysis of refinery wastewater production. Another objective of the survey was to obtain information identifying the use or generation of 123 toxic pollutants and determining the availability of plant data on the effectiveness of their removal. Since the initial questionnaire survey, the list of toxic pollutants has been revised from 123 to the present list of 126 specific substances.

Waste Characterization

Information on waste characterization of petroleum refining effluent is available from four sources which are briefly described below.

The first effort in determining the potential presence of the toxics involved the identification of toxics manufactured and purchased by the industry. The 1977 survey requested such information from the industry.

The second effort was the sampling of 23 refineries and two POTW to determine the presence, absence and relative concentrations of toxic, conventional and non-conventional pollutants. The refineries were selected to be representative of the manufacturing processes, the prevalent mix of production among plants, and the current treatment technologies in the industry. The selected direct discharge refineries were meeting BPT limitations. Seventeen plants were direct dischargers (refineries that discharge effluents to U.S. waters) and six were indirect dischargers (refineries that direct effluents to publicly owned treatment works).

Subsequent to the 1979 proposal, EPA conducted a 60-day sampling program at two petroleum refineries. The program involved the sampling of raw and treated effluent every other day for a period of sixty days. Pollutants analyzed included toxics, but excluded asbestos and pesticides. The objectives of this program were to: (1) determine if there is a surrogate relationship between the priority pollutants and one or more of the traditional pollutant parameters (i.e. COD, TOC); and (2) confirm the presence or absence of specific priority pollutants.

In a separate program, eight refineries were sampled by EPA regional surveillance and analysis field teams.

Technology Evaluation

Three major efforts were undertaken to identify and evaluate available control and treatment technologies. These include:

- A literature search that compiled available information on the status of and advances being made by the industry relative to wastewater handling and disposal.

- A review of the responses to the 1977 EPA Petroleum Refining Industry Survey which determined the status of the industry with regard to in-plant source control and end-of-pipe treatment.

- A program to assess the toxic removal effectiveness of carbon absorption treatment on a pilot scale. Granular activated carbon was tested at six plants and powdered activated carbon was tested in four of the same six refineries.

Subsequent to the 1979 proposal, the Agency conducted two additional studies. The objective of the first study was to determine the technical feasibility of recycle/reuse of wastewater at fifteen refineries. The second study involved the acquisition of effluent concentration data from fifty refineries that have biological treatment systems. Most of these refineries have below - industry average flows. The purposes were to determine if low - flow refineries discharge at higher pollutant concentrations and whether a long term average phenol concentration of 19 ppb is achievable.

The results of the above studies established a range of control and treatment technologies available to the petroleum refining industry. Section V discusses these studies in greater detail. Detailed discussion of BPT treatment technology is not presented in this document. It is presented in the 1974 Development Document.

Cost Development

Information on costs, energy requirements and non-water quality environmental impacts associated with the control and treatment technologies was compiled at the time of the 1979 proposal. The preamble to the 1979 proposal presented estimates of the cost of recycle/reuse for comparison. The Agency confirmed these estimates of the cost of flow reduction via recycle/reuse during the 15 refinery study conducted after the 1979 proposal.

Results of these programs are presented in Section III on industry profile, Section V on waste characterization, Section VII on technology assessment and Appendix A on cost of treatment systems.

SECTION III

DESCRIPTION OF THE INDUSTRY

INTRODUCTION

The purpose of this section is to provide a brief description of the petroleum refining industry. This description is presented in two parts:

1) the overall industry profile; and

2) the unit manufacturing processes.

The industry profile includes a general description of the industry, a description of refinery distribution in the United States, and data related to the growth anticipated for this industry.

The information presented on unit manufacturing processes includes an overview of refining process operations. Also included is information on unit operations, and wastewater characteristics, related to some 20 individual processes.

INDUSTRY PROFILE

General Description of the Industry

This effluent guidelines study covers the petroleum refining industry in the United States, as defined by Standard Industrial Classification (SIC) Code 2911 of the U.S. Department of Commerce. SIC Code 2911 includes facilities primarily engaged in producing hydrocarbon materials through the distillation of crude petroleum and its fractionation products. There are numerous and varied intermediate and finished products which can be refined from crude petroleum. Table III-1 presents a listing of some of the major products of the petroleum refining industry.

It is important to note that the production of crude petroleum and natural gas, the production of natural gasoline and other natural liquid hydrocarbons, and operations associated with such production are not included in SIC 2911. These are covered by SIC Codes 1311 and 1312, respectively, and therefore, are not within the scope of this subject. This study also does not include distribution activities, such as gasoline service stations. Transportation of petroleum products is covered only to the extent that it affects a refinery's pollution control activities, such as the treatment of ballast water. Other activities outside the scope of the SIC Code 2911 were included in the development of raw waste load data and are listed as

auxiliary processes which are an integral part of refinery operations. Some of these include soap manufacture for the production of greases, steam generation, and hydrogen production.

Refinery Distribution

As of January 1, 1981, there were a total of 303 petroleum refineries operating in the United States, excluding Puerto Rico, the Virgin Islands, and Guam. These refineries are operating with a combined capacity of approximately 3.08 million cubic meters per stream-day (19.37 million barrels per stream-day) of crude oil processing. The individual capacities of the 303 refineries range from about 30 cubic meters per stream-day (190 barrels per stream-day) at the smallest plant to about 106,200 cubic meters per stream-day (668,000 barrels per stream-day) at the largest plant.

Since it's inception, the U.S. refining industry has continued to build bigger and more efficient plants as new technology has developed over time. The average U.S. refinery capacity per plant increased from 43.3 thousand barrels per day to 55.6 thousand barrels per day from January 1, 1967, to January 1, 1973. 53 additional U.S. refineries were in operation on January 1, 1981, versus January 1, 1975. The number of plants in operation with capacity greater than 100 thousand barrels per day increased by only seven (from 46 to 53) over this time period. Most of the new plants placed in operation were small. Average U.S. refinery capacity increased only from 56.0 to 57.3 thousand barrels per day from January 1, 1975, to January 1, 1981. Many of the small new plants built in this time period are among the fifty that have discontinued operations during the last year.

Additional information on industry profile is provided in: Table III-2 on refinery capacity; Table III-3 on 1980 consumption of petroleum products; Table III-4 on sources of supply for U.S. petroleum feedstocks; Table III-5 on characteristics of crude oil from major fields around the world; and Table III-6 on trend in domestic petroleum refining from 1975 to 1981.

Within the United States, most of the refining capacity is concentrated in two areas: major crude production areas, such as Texas, California, Louisiana, Oklahoma, and Kansas; and major population areas, such as Pennsylvania, Illinois, Ohio, New Jersey, and Indiana. Table III-2 lists the number of refineries, total crude refining capacity, and major process capacities in the United States by state. The geographical distribution of these refineries is displayed in Figure III-1.

Anticipated Industry Growth

The U.S. refining industry has experienced a dramatic reversal of historical growth trends as a result of the reduction in consumption of petroleum products that has taken place since 1978. U.S. crude oil runs peaked at 14.7 million barrels per day in the calendar year 1978. Runs have decreased each year since then reaching 12.5 million barrels per day for the calendar year 1981. In early 1982 runs have dropped to below 11.5 million barrels per day, representing percentage capacity utilizations in the low 60's. More than fifty plants have discontinued operations in the U.S. over the past year. It is expected that U.S. refinery activity will recover somewhat. The 1981 DOE Annual Report to Congress projects U.S. crude runs at 14.4 million barrels per day in 1985 and 13.4 million barrels per day in 1990 for their mid-oil price scenarios. The above forcasts of U.S. refinery activity indicate that very little, if any, new refinery facilities will be built at undeveloped sites over the next decade. However, it will be necessary for U.S. refiners to modernize and expand downstream facilities at existing refinery sites to allow increasingly heavier and higher sulfur crude oils to be processed into a product mix which emphasizes production of the lighter and higher quality products that will be demanded by the marketplace.

UNIT MANUFACTURING PROCESSES

Overview of Refining Processes

A petroleum refinery is a complex combination of interdependent operations engaged in separating crude molecular constituents, molecular cracking, molecular rebuilding, and solvent finishing to produce petroleum-derived products, such as those shown in Table III-1. There are a number of distinct processes that may be utilized by the industry for the refining of crude petroleum and its fractionation products. The EPA questionnaire survey of the petroleum refining industry, conducted during 1977, identified over 150 separate processes being used. These processes, along with the number of refineries employing each, are presented in Table III-7.

Although only about 150 separate processes were identified in the petroleum refining industry, there are many more process combinations that may be employed at an individual refinery, depending upon the type of crude being processed, the type of product being produced, and the characteristics of the particular refinery.

Process Descriptions and Wastewater Characteristics

The characteristics of the wastewater differ considerably for different processes. Considerable information is available that can be used to make meaningful qualitative interpretations of

pollutant loadings from refinery processes. The results of analysis of available information is presented in Table III-8 which shows the major sources of pollutants within a refinery. In order to characterize the wastes for each of the industry subcategories, it is essential to focus on the sources and contaminants within the individual production processes and auxiliary activities. Each process is itself a series of unit operations which causes chemical and/or physical changes in the feedstock or products. In the commercial synthesis of a single product from a single feedstock, there generally are sections of the process associated with the preparation of the feedstock, the chemical reaction, the separation of reaction products, and the final purification of the desired product. Each unit operation may have quite different water usages associated with it. The types and quantities of contact wastewater are, therefore, directly related to the nature of the various processes. This implies that the types and quantities of wastewater generated by each plant's total production mix are unique. Brief process descriptions and delineation of wastewater sources for the more important refining processes are presented below.

1. Crude Oil and Product Storage. Crude oil, intermediate, and finished products are stored in tanks of varying size to provide adequate supplies of crude oils for primary fractionation runs of economical duration, to equalize process flows and provide feedstocks for intermediate processing units, and to store final products prior to shipment in adjustment to market demands. Generally, operating schedules permit sufficient detention time for settling of water and suspended solids.

Wastewater pollutants associated with storage of crude oil and products are mainly in the form of free and emulsified oil and suspended solids. During storage, water and suspended solids in the crude oil separate. The water layer accumulates below the oil, forming a bottom sludge. When the water layer is drawn off, emulsified oil present at the oil-water interface is often lost to the sewers. This waste is high in COD levels and to a lesser extent, BOD_5. Bottom sludge is removed at infrequent intervals. Additional quantities of waste result from leaks, spills, salt "filters" (for product drying), and tank cleaning.

Intermediate storage is frequently the source of polysulfide - bearing wastewaters and iron sulfide suspended solids. Finished product storage can produce high BOD_5, alkaline wastewaters, as well as tetraethyl lead. Tank cleaning can contribute large amounts of oil, COD, and suspended solids, and a minor amount of BOD_5. Leaks, spills, and open or poorly ventilated tanks can also be a source of air pollution, through evaporation of hydrocarbons into the atmosphere.

2. Ballast Water Storage. Tankers which are used to ship intermediate and final products generally discharge ballast (approximately 30 percent of the cargo capacity is generally required to maintain vessel stability).

Ballast waters discharged by product tankers are contaminated with product materials which are the crude feedstock in use at the refinery, ranging from water soluble alcohol to residual fuels. In addition to the oil products contamination, brackish water and sediments are present, contributing high COD and dissolved solids loadings to the refinery wastewater. These wastewaters are generally discharged to either a ballast water tank or holding ponds at the refinery. In many cases, the ballast water is discharged directly to the wastewater treatment system, and potentially constitutes a "shock" load to the treatment system.

3. Crude Desalting. Common to all types of desalting are an emulsifier and settling tank. Salts can be separated from oil by either of two methods. In the first method, water wash desalting in the presence of chemicals (specific to the type of salts present and the nature of the crude oil) is followed by heating and gravity separation. In the second method, water wash desalting is followed by water/oil separation under the influence of a high voltage electrostatic field acting to agglomerate dispersed droplets. In either case, wastewater containing various removed impurities is discharged to the waste stream, while clean desalted crude oil flows from the upper portion of the holding tank. A process flow schematic of electrostatic desalting is shown in Figure III-2.

Much of the bottom sediment and water (BS&W) content in crude oil is caused by the "load-on-top" procedure used on many tankers. This procedure can result in one or more cargo tanks containing mixtures of sea waters and crude oil, which cannot be separated by decantation while at sea, and are consequently retained in the crude oil storage at the refinery. While much of the water and sediment are removed from the crude oil by settling during storage, a significant quantity remains to be removed by desalting prior to processing of the crude in the refinery.

The continuous wastewater stream from a desalter contains emulsified oil occasionally free oil, ammonia, phenol, sulfides, and suspended solids. These pollutants produce a relatively high BOD_5 and COD. This wastewater also contains enough chlorides and other dissolved materials to contribute to the dissolved solids problem in the areas where the wastewater is discharged to fresh water bodies. There are also potential thermal pollution problems because the temperature of the desalting wastewater often exceeds 95°C (200°F).

4. Crude Oil Fractionation. Fractionation serves as the basic refining process for the separation of crude petroleum into intermediate fractions of specified boiling point ranges. The several alternative subprocesses include prefractionation and atmospheric fractionation, vacuum fractionation, and three-stage crude distillation.

Prefractionation and Atmospheric Distillation (Topping or Skimming)

Prefractionation is an optional distillation process to separate economical quantities of very light distillates from the crude oil. Lower temperature and higher pressure conditions are used than would be required in atmospheric distillation. Some process water can be carried over to the prefractionation tower from the desalting process.

Atmospheric distillation breaks the heated crude oil as follows:

1. Light overhead products (C5 and lighter) as in the case of prefractionation.

2. Sidestream distillate cuts of kerosene, heating and gas oil can be separated in a single tower or in a series of topping towers, each tower yielding a successively heavier product stream.

3. Residual or reduced crude oil.

Vacuum Fractionation

The asphaltic residuum from atmospheric distillation amounts to roughly one-third (U.S. average) of the crude charged. This material is sent to vacuum stills, which recover additional heavy gas oil and deasphalting feedstock from the bottoms residue.

Three-Stage Crude Distillation

Three-stage crude distillation, representing only one of many possible combinations of equipment, is shown schematically in Figure III-3. The process consists of:

1. An atmospheric fractioning stage which produces lighter oils;

2. An initial vacuum stage which produces well-fractioned, lube oil base stocks plus residue for subsequent propane deasphalting; and

3. A second vacuum stage which fractionates surplus atmospheric bottoms not applicable for lube production, plus surplus initial vacuum stage residuum not required for deasphalting. This stage adds the capability of removing catalytic cracking stock from surplus bottoms to the distillation unit.

Crude oil is first heated in a simple heat exchanger, then in a direct-fired crude charge heater. Combined liquid and vapor effluent flow from the heater to the atmospheric fractionating tower, where the vaporized distillate is fractionated into gasoline overhead product and as many as four liquid sidestream products: naphtha, kerosene, light and heavy diesel oil. Part of the reduced crude from the bottom of the atmospheric tower is pumped through a direct-fired heater to the vacuum lube fractionator. Bottoms are combined and charged to a third direct-fired heater. In the tower, the distillate is subsequently condensed and withdrawn as two sidestreams. The two sidestreams are combined to form catalytic cracking feedstocks, with an asphalt base stock withdrawn from the tower bottom.

Wastewater from crude oil fractionation generally comes from three sources. The first source is the water drawn off from overhead accumulators prior to recirculation or transfer of hydrocarbons to other fractionators. This waste is a major source of sulfides and ammonia, especially when sour crudes are being processed. It also contains significant amounts of oil, chlorides, mercaptans, and phenols.

A second waste source is discharge from oil sampling lines. This should be separable but may form emulsions in the sewer.

A third possible waste source is the very stable oil emulsions formed in the barometric condensers used to create the reduced pressures in the vacuum distillation units. However, when barometric condensers are replaced with surface condensers, oil vapors do not come in contact with water; consequently, emulsions do not develop.

5. Thermal Cracking. This fundamental process is defined in this study to include visbreaking and coking, as well as regular thermal cracking. In each of these operations, heavy gas oil fractions (from vacuum stills) are broken down into lower molecular weight fractions such as domestic heating oils, catalytic cracking stock, and other fractions by heating, but without the use of a catalyst. Typical thermal cracking conditions are 480° - 603°C, (900° - 1100°F) and 41.6 - 69.1 atm (600-1000 psig). The high pressures result from the formation of light hydrocarbons in the cracking reaction (olefins, or unsaturated compounds, are always formed in this chemical conversion). There is also a certain amount of heavy fuel oil and coke formed by polymerization and condensation reactions.

The major source of wastewater in thermal cracking is the overhead accumulator on the fractionator, where water is separated from the hydrocarbon vapor and sent to the sewer system. This water usually contains various oils and fractions and may be high in BOD_5, COD, ammonia, phenol, and sulfides, and may have a high alkalinity.

6. Catalytic Cracking. Catalytic cracking, like thermal cracking, breaks heavy fractions, principally gas oils, into lower molecular weight fractions. This is probably the key process in the production of large volumes of high-octane gasoline stocks; furnace oils and other useful middle molecular weight distillates are also produced. The use of catalyst permits operations at lower temperatures and pressures than with thermal cracking, and inhibits the formation of undesirable polymerized products. Fluidized catalytic processes, in which the finely powdered catalyst is handled as a fluid, have largely replaced the fixed bed and moving bed processes, which use a beaded or pelleted catalyst. A schematic flow diagram of fluid catalytic cracking is shown in Figure III-4.

The process involves at least four types of reactions: 1) thermal decomposition; 2) primary catalytic reactions at the catalyst surface; 3) secondary catalytic reactions between the primary products; and 4) removal of polymerizable products from further reactions by absorption onto the surface of the catalyst as coke. This last reaction is the key to catalytic cracking because it permits decomposition reactions to move closer to completion than is possible in simple thermal cracking. Cracking catalysts include synthetic and/or natural silica-alumina, treated bentonite clay, Fuller's earth, aluminum hydrosilicates, and bauxite. These catalysts are in the form of beads, pellets, and powder, and are used in either a fixed, moving, or fluidized bed. The catalyst is usually heated and lifted into the reactor area by the incoming oil feed which, in turn, is immediately vaporized upon contact. Vapors from the reactors pass upward through a cyclone separator which removes most of the entrained catalyst. These vapors then enter the fractionator, where the desired products are removed and heavier fractions recycled to the reactor.

Catalytic cracking units are one of the largest sources of sour and phenolic wastewaters in a refinery. Pollutants from catalytic cracking generally come from the steam strippers and overhead accumulators on fractionators, used to recover and separate the various hydrocarbon fractions produced in the catalytic reactors.

The major pollutants resulting from catalytic cracking operations are oil, sulfides, phenols, cyanides, and ammonia. These pollutants produce an alkaline wastewater with high BOD_5 and COD concentrations. Sulfide and phenol concentrations in the wastewater vary with the type of crude oil being processed, but at times are significant. Regeneration of spent catalyst may produce enough carbon monoxide and catalyst fines to constitute an air pollution problem.

7. Hydrocracking. This process is basically catalytic cracking in the presence of hydrogen, with lower temperatures and higher pressures than fluid catalytic cracking. Hydrocracking temperatures range from 203° - 425°C (400° - 800°F), while pressures range from 7.8 - 137.0 atm (100 to 2000 psig). Actual conditions and hydrogen consumption depend upon the feedstock, and the degree of hydrogenation required. The molecular weight distribution of the products is similar to catalytic cracking, but with the reduced formation of olefins.

At least one wastewater stream from the process should be high in sulfides, since hydrocracking reduces the sulfur content of the material being cracked. Most of the sulfides are in the gas products which are sent to a treating unit for removal and/or recovery of sulfur and ammonia. However, in product separation and fractionation units following the hydrocracking reactor, some of the H_2S will dissolve in the wastewater being collected. This water from the separator and fractionator will probably be high in sulfides, and possibly contain significant quantities of phenols and ammonia.

8. Polymerization. Polymerization units are used to convert olefin feedstocks (primarily propylene) into higher octane polymer units. These units generally consist of a feed treatment unit (remove H2S, mercaptans, nitrogen compounds), a catalytic reactor, an acid removal section, and a gas stabilizer. The catalyst is usually phosphoric acid, although sulfuric acid is used in some older methods. The catalytic reaction occurs at 147° - 224°C (300° - 435°F), and a pressure of 11.2 - 137.0 atm (150 - 2000 psig). The temperature and pressure vary with the individual subprocess used.

Polymerization is a rather dirty process in terms of pounds of pollutants per barrel of charge, but because of the small polymerization capacity in most refineries, the total waste production from the process is small. Even though the process makes use of acid catalysts, the waste stream is alkaline, because the acid catalyst in most subprocesses is recycled, and any remaining acid is removed by caustic washing. Most of the waste material comes from the pretreatment of feedstock to the reactor. The wastewater is high in sulfides, mercaptans, and ammonia. These materials are removed from the feedstock in caustic acid.

9. Alkylation. Alkylation is the reaction of an isoparaffin (usually isobutane) and an olefin (propylene, butylene, amylenes) in the presence of a catalyst at carefully controlled temperatures and pressures to produce a high octane alkylate for use as a gasoline blending component. Propane and butane are also produced. Sulfuric acid is the most widely used catalyst, although hydrofluoric acid is also used. The reactor products are separated in a catalyst recovery unit, from which the

catalyst is recycled. The hydrocarbon stream is passed through a caustic and water wash before going to the fractionation section.

The major discharges from sulfuric acid alkylation are the spent caustics from the neutralization of hydrocarbon streams leaving the sulfuric acid alkylation reactor. These wastewaters contain dissolved and suspended solids, sulfides, oils, and other contaminants. Water drawn off from the overhead accumulators contains varying amounts of oil, sulfides, and other contaminants, but is not a major source of waste in this subprocess. Most refineries process the waste sulfuric acid stream from the reactor to recover clean acids, use it for neutralization of other waste streams, or sell it.

Hydrofluoric acid alkylation units have small acid rerun units to purify the acid for reuse. HF units do not have a spent acid or spent caustic waste stream. Any leaks or spills that involve loss of fluorides constitute a serious and difficult pollution problem. Formation of fluorosilicates has caused line plugging and similar problems. The major sources of waste material are the overhead accumulators on the fractionator.

10. Isomerization. Isomerization is a process technique for obtaining higher octane motor fuel by converting light gasoline stocks into their higher octane isomers. The greatest application has been, indirectly, in the conversion of isobutane from normal butane for use as feedstock for the alkylation process. In a typical subprocess, the desulfurized feedstock is first fractionated to separate isoparaffins from normal paraffins. The normal paraffins are then heated, compressed, and passed through the catalytic hydrogenation reactor which isomerizes the n-paraffin to its respective high octane isomer. After separation of hydrogen, the liquids are sent to a stabilizer, where motor fuel blending stock or synthetic isomers are removed as products.

Isomerization wastewaters present no major pollutant discharge problems. Sulfides and ammonia are not likely to be present in the effluent. Isomerization wastewaters should also be low in phenolics and oxygen demand.

11. Reforming. Reforming converts low octane naphtha, heavy gasoline, and napthene-rich stocks to high octane gasoline blending stock, aromatics for petrochemical use, and isobutane. Hydrogen is a significant by-product of the process. Reforming is a mild decomposing process, since some reduction occurs in molecular size and boiling range of the feedstock. Feedstocks are usually hydrotreated for the removal of sulfur and nitrogen compounds prior to charging to the reformer, since the platinum catalysts widely used are readily poisoned.

The predominant reaction during reforming is the dehydrogenation of naphthenes. Important secondary reactions are the

isomerization and dehydrocyclization of paraffins. All three reactions result in high octane products.

One subprocess may be divided into three parts: the reactor heater section, in which the charge plus recycle gas is heated and passed over the catalyst in a series of reactions; the separator drum, in which the reactor effluent is separated into gas and liquid streams, the gas being compressed for recycle; and the stabilizer section, in which the separated liquid is stabilized to the desired vapor pressure. There are many variations in subprocesses, but the essential and frequently the only difference is the composition of the catalyst involved.

Reforming is a relatively clean process. The volume of wastewater flow is small, and none of the wastewater streams have high concentrations of significant pollutants. The wastewater is alkaline, and the major pollutant is sulfide from the overhead accumulator on the stripping tower used to remove light hydrocarbon fractions from the reactor effluent. The overhead accumulator catches any water that may be contained in the hydrocarbon vapors. In addition to sulfides, the wastewater contains small amounts of ammonia, mercaptans, and oil.

12. Solvent Refining. Refineries employ a wide spectrum of contact solvent processes, which are dependent upon the differential solubilities of the desirable and undesirable feedstock components. The principal steps are: counter-current extraction, separation of solvent and product by heating and fractionation, and solvent recovery. Napthenics, aromatics, unsaturated hydrocarbons, sulfur and other inorganics are separated, with the solvent extract yielding high purity products. Many of the solvent processes may produce process wastewaters which contain small amounts of the solvents employed. However, these are usually minimized because of the economic incentives for reuse of the solvents.

Solvent Deasphalting

The primary purpose of solvent deasphalting is to recover lube or catalytic cracking feedstocks from asphaltic residuals, with asphalt as a by-product. Propane deasphalting is the predominant technique. The vacuum fractionation residual is mixed in a fixed proportion with a solvent in which asphalt is not soluble. The solvent is recovered from the oil via steam stripping and fractionation, and is reused. The asphalt produced by this method is normally blended into fuel oil or other asphaltic residuals.

Solvent Dewaxing

Solvent drawing removes wax from lubricating oil stocks by promoting crystallization of the wax. Solvents which are used include: furfural, phenol, cresylic acid - propane (Duo-Sol),

liquid sulfur dioxide (Eleleanu process), B-B - dichloroethyl ether, methyl ethyl ketone, nitrobenzene, and sulfur-benzene. The process yields deoiled waxes, wax-free lubricating oils, aromatics, and recovered solvents.

Lube Oil Solvent Refining

This process includes a collection of subprocesses for improving the quality of lubricating oil stock. The raffinate or refined lube oils obtain improved temperature, viscosity, color, and oxidation resistance characteristics. A particular solvent is selected to obtain the desired quality raffinate. The solvents include: furfural, phenol, sulfur dioxide, and propane.

Aromatic Extraction

Benzene, toluene, and xylene (BTX) are formed as by-products in the reforming process. The reformed products are fractionated to give a BTX concentrate cut, which, in turn, is extracted from the napthalene and the paraffinics with a glycol base solvent.

Butadiene Extraction

Approximately 15 percent of the U.S. supply of butadiene is extracted from the C4 cuts from the high temperature petroleum cracking processes. Furfural or cuprous ammonia acetate (CAA) is commonly used for the solvent extraction.

The major potential pollutants from the various solvent refining subprocesses are the solvents themselves. Many of the solvents, such as phenol, glycol, and amines, can produce a high BOD_5. Under ideal conditions the solvents are continually recirculated with no losses to the sewer. Unfortunately, some solvent is always lost through pump seals, flange leaks, and other sources. The main source of wastewater is from the bottom of fractionation towers. Oil and solvent are the major wastewater constituents.

13. Hydrotreating. Hydrotreating processes are used to saturate olefins, and to remove sulfur and nitrogen compounds, odor, color and gum-forming materials, and others by catalytic action in the presence of hydrogen, from either straight-run or cracked petroleum fractions. In most subprocesses, the feedstock is mixed with hydrogen, heated, and charged to the catalytic reactor. The reactor products are cooled, and the hydrogen, impurities and high grade product separated. The principal difference between the many subprocesses is the catalyst; the process flow is similar for essentially all subprocesses.

Hydrotreating processes are used to reduce the sulfur content of product streams from sour crudes by approximately 90 percent or more. Nitrogen removal requires more severe operating conditions, but generally 80 - 90 percent, or better, reductions are accomplished.

The primary variables influencing hydrotreating are hydrogen partial pressure, process temperature, and contact time. An increase in hydrogen pressure gives a better removal of undesirable materials and a better rate of hydrogenation. Make-up hydrogen requirements are generally high enough to require a hydrogen production unit. Excessive temperatures increase the formation of coke, and the contact time is set to give adequate treatment without excessive hydrogen usage and/or undue coke formation. For the various hydrotreating processes, the pressures range from 7.8 - 205.1 atm (100 to 3000 psig). Temperatures range from less than 177°C (350°F) to as high as 450°C (850°F), with most processing done in the range of 314°C (600°F) to 427°C (800°F). Hydrogen consumption is usually less than 5.67 M^3 (200 scf) per barrel of charge.

Principal hydrotreating subprocesses are used as follows:

1. Pretreatment of catalytic reformer feedstock;
2. Naphtha desulfurization;
3. Lube oil polishing;
4. Pretreatment of catalytic cracking feedstock;
5. Heavy gas-oil and residual desulfurization; and
6. Naphtha saturation.

The strength and quantity of wastewaters generated by hydrotreating depends upon the subprocess used and feedstock. Ammonia and sulfides are the primary contaminants, but phenols may also be present if the feedstock boiling range is sufficiently high.

14. Grease Manufacturing. Grease manufacturing processes require accurate weight or volumetric measurements of feed components, intimate mixing, rapid heating and cooling, together with milling, dehydration and polishing in batch reactions. The feed components include soap and petroleum oils with inorganic clays and other additives.

Grease is primarily a soap and lube oil mixture. The properties of grease are determined in large part by the properties of the soap component. For example, sodium metal base soaps are water soluble and would then not be suitable for water contact service. A calcium soap grease can be used in water service. The soap may be purchased as a raw material or may be manufactured on site as an auxiliary process.

Only very small volumes of wastewater are discharged from a grease manufacturing process. A small amount of oil is lost to the wastewater system through leaks in pumps. The largest waste loading occurs when the batch units are washed, resulting in soap and oil discharges to the sewer system.

15. Asphalt Production. Asphaltic feedstock (flux) is contacted with hot air at 203°C (400°F) to 280°C (550°F) to obtain desirable asphalt product. Both batch and continuous processes are in operation at present, but the batch process is more prevalent because of its versatility. Nonrecoverable catalytic compounds include: copper sulfate, zinc chloride, ferric chloride, aluminum chloride, phosphorous pentoxide, and others. The catalyst will not normally contaminate the process water effluent.

Wastewaters from asphalt blowing contain high concentrations of oils and have high oxygen demand. Small quantities of phenols may also be present.

16. Drying and Sweetening. Drying and sweetening is a relatively broad process category primarily used to remove sulfur compounds, water and other impurities from gasoline, kerosene, jet fuels, domestic heating oils, and other middle distillate products. "Sweetening" pertains to the removal of hydrogen sulfide, mercaptans, and thiophenes, which impart a foul odor and decrease the tetra-ethyl lead susceptibility of gasoline. The major sweetening operations are oxidation of mercaptans or disulfides, removal of mercaptans, and destruction and removal of all sulfur compounds. Drying is accomplished by salt filters or absorptive clay beds. Electric fields are sometimes used to facilitate separation of the product.

The most common waste stream from drying and sweetening operations is spent caustic. The spent caustic is characterized as phenolic or sulfidic, depending on which is present in the largest concentration. Whether the spent caustic is actually phenolic or sulfidic is mainly determined by the product stream being treated. Phenolic spent caustics contain phenol, cresols, xylenols, sulfur compounds and neutral oils. Sulfidic spent caustics are rich in sulfides, but do not contain any phenols. These spent caustics have very high BOD_5 and COD. The phenolic caustic streams are usually sold for the recovery of phenolic materials.

Other waste streams from the process result from water washing of the treated product and regeneration of the treating solution such as sodium plumbite Na_2 Pb02) in doctor sweetening. These waste streams will contain small amounts of oil and the treating material, such as sodium plumbite (or copper from copper chloride sweetening).

The treating of sour gases produces a purified gas stream, and an acid gas stream rich in hydrogen sulfide. The H2S rich stream can be flared, burned as fuel, or processed for recovery of elemental sulfur.

17. Lube Oil Finishing. Solvent refined and dewaxed lube oil stocks can be further refined by clay or acid treatment to remove color-forming and other undesirable materials. Continuous contact filtration, in which an oil-clay slurry is heated and the oil removed by vacuum filtration, is the most widely used subprocess.

Acid treatment of lubricating oils produces acid bearing wastes occuring as rinse waters, sludges, and discharges from sampling, leaks, and shutdowns. The waste streams are also high in dissolved and suspended solids, sulfates, sulfonates, and stable oil emulsions.

Handling of acid sludge can create additional problems. Some refineries burn the acid sludge as fuel. Burning the sludge produces large volumes of sulfur dioxide that can cause air pollution problems. Other refineries neutralize the sludge with alkaline wastes and discharge it to the sewer, resulting in both organic and inorganic pollution. The best method of disposal is probably processing to recover the sulfuric acid, but this also produces a wastewater stream containing acid, sulfur compounds, and emulsified oil.

Clay treatment results in only small quantities of wastewater being discharged to the sewer. Clay, free oil, and emulsified oil are the major waste constituents. However, the operation of clay recovery kilns involves potential air pollution problems of hydrocarbon and particulate emissions. Spent clays usually are disposed of by landfill.

18. Blending and Packaging. Blending is the final step in producing finished petroleum products to meet quality specifications and market demands. The largest volume operation is the blending of various gasoline stocks (including alkylates and other high-octane components) and anti-knock (tetra-ethyl lead), anti-rust, anti-icing, and other additives. Diesel fuels, lube oils, and waxes involve blending of various components and/or additives. Packaging at refineries is generally highly automated and restricted to high volume, consumer oriented products such as motor oils.

These are relatively clean processes because care is taken to avoid loss of product through spillage. The primary source of waste material is from the washing of railroad tank cars or tankers prior to loading finished products. These wash waters are high in emulsified oil.

Tetra-ethyl lead is the major additive blended into gasolines and it must be carefully handled because of its high toxicity. Sludges from finished gasoline storage tanks can contain large amounts of lead and should not be washed into the wastewater system.

19. Hydrogen Manufacture. The rapid growth of hydrotreating and hydrocracking has increased the demand for hydrogen beyond the level of by-product hydrogen available from reforming and other refinery processes. The most widely used process for the manufacture of hydrogen in the refinery is steam reforming, which utilizes refinery gases as a charge stock. The charge is purified to remove sulfur compounds that would temporarily deactivate the catalysts.

The desulfurized feedstock is mixed with superheated steam and charged to the hydrogen furnace. On the catalyst, the hydrocarbons are converted to hydrogen, carbon monoxide, and carbon dioxide. The furnace supplies the heat needed to maintain the reaction temperature.

The gases from the furnace are cooled by the addition of condensate and steam, and then passed through a converter containing a high or low temperature shift catalyst depending on the degree of carbon monoxide conversion desired. Carbon dioxide and hydrogen are produced by the reaction of the monoxide with steam.

The gas mixture from the converter is cooled and passed to a hydrogen purifying system where carbon dioxide is absorbed into amine solutions and later driven off to the atmosphere by heating the rich amine solution in the reactivator.

Since some refining processes require a minimum of carbon oxides in the product gas, the oxides are reacted with hydrogen in a methanation step. This reaction takes place in the methanator over a nickel catalyst at elevated temperatures.

Hydrocarbon impurities in the product hydrogen usually are not detrimental to the processes where this hydrogen will be used. Thus, a small amount of hydrocarbon is tolerable in the effluent gas.

Information concerning wastes from this process is not available. However, the process appears to be a relatively clean one. In the steam reforming subprocess a potential waste source is the desulfurization unit, which is required for feedstock that has not already been desulfurized. This waste stream would contain oil, sulfur compounds, and phenol. In the partial oxidation subprocess free carbon is removed by a water wash. Carbon dioxide is discharged to the atmosphere at several points in the subprocess.

20. Utilities Function. Utility functions such as the supply of steam and cooling water generally are set up to service several processes. Boiler feed water is prepared and steam is generated in a single boiler house. Non-contact steam used for surface heating is circulated through a closed loop, whereby varying quantities are made available for the specific requirements of

the different processes. The condensate is nearly always recycled to the boiler house, where a certain portion is discharged as blowdown.

The three major uses of steam generated within a refinery plant are:

1. For noncontact process heating. In this application, the steam is normally generated at pressures of 9.5 to 45.2 atm (125 to 650 psig);

2. For power generation such as in steam driven turbines, compressors, and pumps associated with the process. In this application, the steam is normally generated at pressures of 45.2 to 103 atm (650 to 1500 psig) and requires superheating; and

3. For use as a diluent, stripping medium, or source of vacuum through the use of steam jet ejectors. This steam actually contacts the hydrocarbons in the manufacturing processes and is a source of contact process wastewater when condensed. It is used at a substantially lower pressure than the foregoing and frequently is exhaust steam from one of the other uses.

Steam is supplied to the different users throughout the plant either by natural circulation, vapor phase systems, or by forced circulation liquid heat transfer systems. Both types of systems discharge some condensate as blowdown and require the addition of boiler makeup water. The main areas of consideration in boiler operation are normally boiler efficiency, internal deposits, corrosion, and the required steam quality.

Boiler efficiency is dependent on many factors. One is the elimination of boiler - tube deposition that impedes heat transfer. The main contributors to boiler deposits are calcium, magnesium, silicon, iron, copper, and aluminum. Any of these can occur in natural waters, and some can result from condensate return line corrosion or even from makeup water pretreatment. Modern industrial boilers are designed with efficiencies on the order of 80 percent. A deposit of 0.32 cm (1/8 inch) in depth will cause a 2-3 percent drop in this efficiency, depending on the type of deposit.

The quantity and quality of the blowdown from boilers and cooling towers depend on the design of the particular plant utility system. The heat content of these streams is purely a function of the heat recovery equipment associated with the utility system. The amounts of waste brine and sludge produced by ion exchange and water treatment systems depends on both the plant water use function and the intake source. None of these utility waste streams can be related directly to specific process units.

Quantitative limitations on parameters such as dissolved solids, hardness, alkalinity, and temperature, therefore, cannot be allocated on a production basis. The limitations on such parameters associated with noncontact utility effluents should be established on the basis of the water quality criteria of the specific receiving water body or an EPA study of all industries, to define specific utility effluent limitations.

Noncontact cooling water also is normally supplied to several processes from the utilities area. The system is either a loop which utilizes one or more evaporative cooling towers, or a once-through system with direct discharge.

Cooling towers accomplish the cooling of water circulated over the tower by moving a predetermined flow of ambient air through the tower with large fans. The air water contact causes a small amount of the water to be evaporated by the air. Thus, through latent heat transfer, the remainder of the circulated water is cooled.

Approximately 252 kg cal (1,000 BTU) are removed from the total water circulation by the evaporation of 0.454 kg (1 lb) of water. Therefore, if 45.4 kg (100 lbs) of water are introduced at the tower inlet and 0.454 kg (1 lb) is evaporated to the moving air, the remaining 44.9 kg (99 lbs) of water are reduced in total heat content by 252 kg cal (1,000 BTU), of water leaving the tower have been cooled 3.24°C/kg/kg cal (1°F/lb/BTU) removed, and the exit temperature is reduced by about 5.5°C (10°F). The common rule of thumb is 1 percent evaporation loss for each 5.5°C (10°F) cooling.

Since cooling is primarily by transfer of latent heat, cooling tower selection is based on the total heat content or enthalpy of the entering air. At any one enthalpy condition, the wet bulb temperture is constant. Therefore, cooling towers are selected and guaranteed to cool a specific volume of water from a hot-water temperature to a cold water temperature while operating at a design wet bulb temperature. Design wet bulb temperatures vary from 15.6 °C (60°F) to 35°C (85°F) depending on the geographic area, and are usually equaled or exceeded only 2.5 percent to 5 percent of the total summer operating time.

Hot water temperature minus cold water temperature is termed cooling range, and the difference between cold water and wet bulb temperature is called approach.

A closed system is normally used when converting from once-through river cooling of plant processes. In the closed system, a cooling tower is used for cooling all the hot water from the processes. With the closed system, makeup water is required to replace evaporation loss at the tower.

Two other types of water losses also occur. The first is drift, which is droplet carryover in the air as contrasted to evaporate loss. The cooling tower industry has a standardized guarantee that drift loss will not exceed 0.2 percent of the water circulated. The second loss in the closed system is blowdown to sewer or river. Although blowdown is usually taken off the hot water line, it may be removed from the cold water stream in order to comply with any regulations that limit the temperature of water returned to the stream. Blowdown from a tower system will vary depending on the solids concentration in the makeup water, and on the occurrence of solids that may be harmful to equipment. Generally, blowdown will be about 0.3 percent per 5.5°C (10°F) of cooling, in order to maintain a solids concentration in the recirculated water of three to four times that of the makeup water.

Internal boiler water treatment methods have advanced to such a stage that corrosion in the steam generation equipment can be virtually eliminated. The control of caustic embrittlement in boiler tubes and drums is accomplished through the addition of sodium nitrate in the correct ratio to boiler water alkalinity.

Caustic corrosion in high heat transfer boilers can also be controlled by the addition of chelating agents. This type of solubilizing internal boiler water treatment has been shown to be more effective than previous precipitation treatment using phosphate.

Other factors influencing boiler efficiency include reduction of the amount of boiler blowdown by increasing cycles of concentration of the boiler feedwater, efficiency of the blowdown heat recovery equipment, and the type of feed used.

Steam purity is of prime importance if:

1. The boilers are equipped with superheaters;

2. The boilers supply power generation equipment;

3. The steam is used directly in a process where contamination could affect product quality or destroy some material (such as a catalyst) essential to the manufacture of the product.

The minimum purity required for contact steam (or contact process water) varies from process to process. Acceptable amounts of suspended solids, total solids, and alkalinity vary inversely with the steam pressure. The following tabulation summarizes boiler water concentration limits for a system providing a steam purity of 0.5 - 1.0 ppm total solids, which is required for most noncontact steam uses. Boiler operation generally requires the use of antifoam agents and steam separation equipment.

Boiler Water Concentration Limits

Parameter	Boiler Pressure, atm.			
	21.4	21.5-31.6	31.7-41.8	41.9-52.0
Total Solids (mg/L)	6,000	5,000	4,000	2,500
Suspended Solids (mg/L)	1,000	200	100	50
Total Alkalinity (mg/L)	1,000	900	800	750

Water conditioning or pretreatment systems are normally part of the utilities section of most plants. From the previous discussions, it is obvious that the required treatment may be quite extensive. Ion exchange demineralization systems are very widely employed, not only for conditioning water for high pressure boilers, but also for conditioning various process waters. Clarification is also widely practiced and usually precedes the ion exchange operation.

TABLE III-1

INTERMEDIATE AND FINISHED PRODUCTS
PRODUCED BY THE PETROLEUM REFINING INDUSTRY

SIC 2911

Acid Oil
Alkylates
Aromatic Chemicals
Asphalt and Asphaltic Materials (Semi-Solid and Solid)
Benzene
Benzol
Butadiene
Coke (Petroleum)
Fuel Oils (Distillate and Residual)
Gas (Refinery or Still Oil)
Gases (LPG)
Gasoline (except Natural Gasoline)
Greases (Petroleum, Lubricative, Mineral Jelly, etc.)
Jet Fuels
Kerosene
Mineral Oils (Natural)
Mineral Waxes (Natural)
Naphtha
Naphthenic Acids
Oils (Partly Refined)
Paraffin Wax
Petroleums (Nonmedicinal)
Road Oils
Solvents
Tar or Residuum

TABLE III-2

REFINING CAPACITY OF PETROLEUM REFINERIES IN THE U.S. BY STATE AS OF JANUARY 1, 1981 (167)

State	No. plants	- Crude Capacity - m^3/sd	b/sd	Charge capacity, b/sd: Vacuum distillation	Thermal operations	- Cat cracking - Fresh feed	Recycle	Cat reforming	Cat hydro-cracking	Cat hydro-refining	Cat hydro-treating	Production capacity, b/sd: Alkylation	Aromatics-isomerization	Lubes	Asphalt	Hydrogen (MMcfd)	Coke (t/d)
Alabama	6	24,039	151,218	31,500	.....	.....	.....	23,500	.....	13,000	38,000	.....	.....	.....	26,500	.....	.....
Alaska	4	21,526	135,410	.....	.....	.....	.....	10,000	7,500	.....	10,000	.....	.....	.....	6,000	.....	.....
Arizona	1	1,033	6,500	3,000	.....	.....	.....	.....	.....	.....	.....	.....	.....	.....	.....	.....	.....
Arkansas	4	10,675	67,150	26,100	.....	15,000	500	10,000	.....	.....	15,300	4,500	.....	3,950	8,250	.....	.....
California	43	404,303	2,769,725	1,188,100	459,683	549,000	60,200	578,738	331,722	369,000	834,866	95,644	10,500	21,570	82,100	837.7	16,636
Colorado	3	10,254	64,500	27,500	3,300	7,000	500	19,000	.....	.....	20,200	.....	.....	.....	3,300	0.6	180
Delaware	1	23,846	150,000	90,700	44,000	62,000	15,000	42,000	20,000	.....	110,000	8,000	3,595	.....	.....	72.0	1,500
Florida	2	7,076	44,513	8,000	.....	.....	.....	.....	.....	.....	.....	.....	.....	.....	.....	.....	.....
Georgia	2	5,087	32,000	.....	.....	.....	.....	.....	.....	.....	.....	.....	.....	.....	17,500	.....	.....
Hawaii	2	19,955	125,526	28,000	.....	22,000	.....	12,000	.....	.....	15,500	4,500	1,500	.....	1,300	2.5	.....
Illinois	11	202,544	1,274,104	429,499	133,600	449,110	88,640	319,677	66,500	33,000	582,753	107,098	7,300	5,600	53,000	95.5	5,210
Indiana	8	103,203	649,200	285,500	23,000	212,000	12,700	123,700	.....	.....	223,660	30,000	21,200	8,900	55,400	.....	1,200
Kansas	11	77,090	484,933	143,710	50,000	177,550	46,150	121,400	3,200	44,500	175,400	50,400	3,400	5,400	23,000	.....	1,855
Kentucky	4	40,219	253,000	118,000	4,000	70,000	21,000	49,000	.....	40,000	100,500	11,000	18,500	5,000	33,500	20.0	.....
Louisiana	33	411,344	2,587,555	874,542	215,633	876,677	56,983	461,713	82,200	216,500	602,910	162,188	36,500	30,600	56,100	73.0	6,930
Maryland	2	4,886	30,736	14,300	.....	.....	.....	.....	.....	.....	.....	.....	.....	.....	11,300	.....	.....
Michigan	5	21,931	137,594	26,000	.....	43,000	6,100	34,400	.....	12,500	39,700	7,500	.....	.....	8,650	.....	.....
Minnesota	3	35,753	224,905	121,000	23,000	85,500	7,900	34,600	.....	69,000	78,800	14,400	.....	.....	49,000	14.0	1,300
Mississippi	8	62,827	395,214	158,300	7,000	72,200	6,860	95,400	68,000	56,000	53,450	14,400	6,000	.....	10,400	109.0	320
Missouri	1	17,646	111,000	40,000	13,500	42,000	12,000	16,000	.....	.....	61,500	5,000	.....	6,500	.....	.....	800
Montana	6	25,753	162,000	51,100	10,000	50,100	14,700	44,200	4,900	14,000	97,550	10,200	4,600	.....	14,450	16.7	310
Nebraska	1	979	6,160	2,400	.....	2,400	500	750	.....	.....	.....	.....	.....	.....	.....	.....	.....
Nevada	1	715	4,500	3,000	.....	.....	.....	.....	.....	.....	.....	.....	.....	.....	.....	.....	.....
New Hampshire	1	2,715	13,684	.....	.....	.....	.....	.....	.....	.....	.....	.....	.....	.....	.....	.....	.....
New Jersey	5	113,326	712,878	347,952	35,944	231,444	46,333	79,944	.....	110,000	325,043	17,133	28,000	7,500	98,000	.....	975
New Mexico	7	19,266	121,190	21,900	1,500	18,200	5,620	25,750	.....	.....	31,050	2,940	.....	.....	3,100	.....	.....
New York	3	23,159	145,684	43,000	.....	42,000	12,900	23,000	.....	20,000	39,500	2,000	7,000	.....	10,500	.....	.....
North Carolina	1	1,936	12,495	.....	.....	.....	.....	.....	.....	.....	.....	.....	.....	.....	.....	.....	.....
North Dakota	3	10,842	68,200	.....	1,100	26,000	5,200	12,500	.....	.....	13,500	2,800	500	.....	.....	.....	.....
Ohio	7	97,926	616,000	208,500	27,400	205,500	43,300	170,700	81,000	34,500	172,500	36,800	10,900	2,100	31,800	72.0	1,250
Oklahoma	12	93,519	588,281	194,763	77,866	206,700	32,400	127,222	5,000	26,000	158,277	47,733	16,305	9,800	24,600	10.0	1,750
Oregon	1	2,510	15,789	16,000	.....	.....	.....	.....	.....	.....	.....	.....	.....	.....	11,500	.....	.....
Pennsylvania	9	124,458	782,900	332,850	.....	216,300	23,300	232,900	55,000	182,000	331,600	43,900	9,900	27,700	30,000	48.5	.....
Tennessee	1	7,869	49,500	12,000	.....	30,000	12,000	9,300	.....	.....	29,500	3,600	.....	.....	3,500	.....	.....
Texas	59	866,619	5,451,461	1,804,904	394,588	1,555,565	273,899	1,175,109	139,666	871,000	2,150,597	251,698	254,220	97,522	62,800	332.0	6,975
Utah	8	27,449	172,668	45,500	8,500	54,000	11,660	23,200	1,100	5,500	33,600	11,150	3,750	.....	4,700	.....	350
Virginia	1	8,743	55,000	29,000	15,000	28,000	5,000	9,500	.....	.....	26,500	.....	.....	.....	.....	.....	875
Washington	7	65,157	409,867	164,015	38,000	94,833	28,999	112,722	46,000	20,500	172,165	25,333	2,900	.....	6,500	62.0	2,910
West Virginia	2	3,672	23,100	10,875	.....	.....	.....	6,400	.....	.....	7,800	.....	.....	6,600	.....	1.2	.....
Wisconsin	1	7,440	46,800	20,500	.....	9,700	1,000	10,000	.....	5,800	10,000	1,700	.....	.....	13,500	.....	.....
Wyoming	13	34,590	217,589	74,650	13,444	77,477	19,233	37,094	.....	16,644	63,394	7,950	1,500	1,830	14,016	.....	125
TOTAL	303	3,079,333	19,370,529	6,996,660	1,600,058	5,531,256	870,577	4,051,419	911,788	2,159,444	6,625,115	979,567	448,070	240,572	774,266	1,766.7	51,451

NOTES:

m^3/sd - cubic meters per stream-day

b/sd - barrels per stream-day

TABLE III-3

1980 Consumption of Petroleum Products

Products	1980 Consumption, Million Cubic Meters Per Day (Million Barrels Per Day)	
Motor Gasoline	1.05	(6.6)
Aviation Fuels	0.17	(1.1)
Distillate Fuel Oil	0.46	(2.9)
Residual Fuels	0.40	(2.5)
All Other Products	0.62	(3.9)
Total Consumption	2.70	(17.0)

Source - DOE Monthly Energy Review

TABLE III-4

Sources of Supply for U.S. Petroleum Feedstocks

Source	Supply, Million Barrels Per Day 1980	1985 (Projected)
Domestic Crude Oil Production	8.6	7.9
Domestic Natural Gas Liquids	1.6	1.4
Crude Oil Imports	5.2	5.1
Residual Fuel Imports	.9	1.1
Other Imports	.7	
Exports	(.5)	(.1)
Micellaneous Sources[1]	.5	.4
Total Supply	17.0	15.8

[1] processing gain, stock change, etc.

Sources - 1980 - DOE Monthly Energy Review
1985 (Projected) - DOE Annual Report to Congress EIA/1980 - low price scenario

Characteristics of Crude Oils from Major Fields Around the World

Country	Gravity, API	Sulfur, Percent	Nitrogen, Percent
Abu Dhabi			
Murban	39.4	0.74	—
Algeria			
Hassi Messaoud	44.7	0.13	—
Canada			
Alberta	—	—	—
Bonnie Glen	34 - 44	0.25	—
Golden Spike	36 - 39	0.23	—
Judy Creek	42 - 43	—	—
Pembina	32 - 37	0.42	—
Swan Hills	41	0.80	—
Saskatchewan			
Midale	28 - 32	1.89	—
Weyburn	24 - 33	2.12	—
Indonesia			
Minas	35.2	0.09	—
Iraq			
Basrah Light	33.9	2.08	—
Libya			
Brega	40.4	0.21	—
Mexico			
Reforma	33.0	1.56	—
Maya	22.0	3.4	—
Norway			
Ekofisk	36.3	0.21	—
Saudi Arabia	27 - 39	1.0 - 2.8	—
United States			
Alaska			
Cook Inlet	36	0.1	—
Prudhoe Bay	26.8	1.04	—
Arkansas			
Smackover	22.2	2.10	0.080

TABLE III-5

Country	Gravity, API	Sulfur, Percent	Nitrogen, Percent
California			
Elk Hills	22.5	0.68	0.472
Huntington Beach	22.6	1.57	0.048
Kern River	12.6	1.19	0.604
Midway-Sunset	22.6	0.94	
San Ardo	11.1	2.25	0.913
Wilmington	22.1	1.44	
Colorado			
Rangely	34.8	0.56	0.073
Kansas			
Bemis Shutts	34.6	0.57	0.162
Louisiana			
Bayou Sale	36.2	0.16	
Caillou Isl.	35.4	0.23	0.040
Golden Meadow	37.6	0.18	
Grand Bay	35	0.31	
Lake Barre	40.4	0.14	0.02
Lake Washington	28.2	0.37	0.146
West Bay	32.1	0.27	0.071
Bay Marchand Blk. 2	20.2	0.46	
Main Pass Blk. 69	30.6	0.25	0.098
South Pass Blk. 24	32.3	0.26	0.068
South Pass Blk. 27	35.6	0.18	0.069
Timballier Bay	34.4	0.33	0.081
West Delta Blk. 30	27	0.33	0.09
Mississippi			
Baxterville	17.1	2.71	0.111
New Mexico			
Vacuum	35	0.95	0.075
Oklahoma			
Golden Trend	42.1	0.11	
Texas			
Anahuac	33.2	0.23	0.041
Conroe	37.6	0.15	
Diamond M	45.4	0.20	
East Texas	39.4	0.32	
Hastings	31.0	0.15	0.02
Hawkins	26.8	2.19	0.076
Headlee	51.1	<0.10	0.083
Kelly Snyder	38.6	0.29	0.066
Levelland	31.1	2.12	0.136
Midland Farms	39.6	0.13	0.080
Panhandle	40.4	0.55	0.067
Seeliason	41.3	<0.10	0.014

TABLE III-5

Country	Gravity, API	Sulfur, Percent	Nitrogen, Percent
Tom O'Connor	31.1	0.16	0.03
Wasson	31.9	1.40	0.47
Webster	29.3	0.21	0.046
Yates	30.2	1.54	0.150
Utah			
Aneth	40.4	0.20	0.059
Venezuela			
Boscan	10.3	5.53	—
Tia Juana Medium	24.0	1.6	—
Lagomedio	32.6	1.23	—

TABLE III-6

Trend in Domestic Petroleum Refining from 1975 to 1981
(Fifty States)

	January 1, 1975	January 1, 1981	Percent Change
Crude Capacity, bbl/CD	14,737,139	18,119,160	+23
Total Companies	140	190	+36
Total Refineries	263	316	+20
Refineries with Capacity >100 Mbbl/CD	46	53	+15
Refineries with Capacity <35 Mbbl/CD	144	181	+26
Total Capacity of All >100 Mbbl/CD Refineries	8,762,400	11,043,400	+26
Average Refinery Capacity, bbl/CD	56,035	57,339	+2

Sources: DOE Annual Survey, EIA - 0111 (81)
DOI Bureau of Mines Annual Survey (1975)

TABLE III-7

LIST OF PROCESSES IDENTIFIED FROM THE 1977 INDUSTRY SURVEY BY EPA PROCESS NUMBER

General Processes		Units	Number of Refineries Using Process
1.	Atmospheric Crude Distillation	MBD	246
2.	Crude Desalting	MBD	191
3.	Vacuum Crude Distillation	MBD	163
4.	Visbreaking	MBD	11
5.	Thermal Cracking	MBD	18
6.	Fluid Catalytic Cracking	MBD	118
7.	Moving Bed Catalytic Cracking	MBD	20
8.	H_2SO_4 Alkylation [a]	MBD	59
9.	HF Alkylation [a]	MBD	65
10.	Hydrocracking [b]	MBD	38
11.	Hydroprocessing [b]	MBD	122
12.	Catalytic Reforming	MBD	166
13.	Catalytic Polymerization	MBD	36
14.	Aromatic Petrochemicals Production	MBD	37
15.	Delay Coking [c]	MBD	45
16.	Fluid Coking	MBD	6
17.	Isomerization	MBD	19
18.	Asphalt Production [d]	MBD	104
19.	Eliminated	MBD	-
20.	Eliminated	MBD	-
Lube Oil Processes			
21.	Hydrofining, Hydrofinishing, Lube Hydrofining [b]	MBD	19
22.	White Oil Manufacture	MBD	6
23.	Propane Dewaxing, Propane Deasphalting Propane Fractioning, Propane Deresining	MBD	25
24.	Duo Sol, Solvent Treating, Solvent Extraction, Duotreating, Solvent Dewaxing, Solvent Deasphalt	MBD	10
25.	Lube Vac Twr, Oil Fractionation, Batch Still (Naphtha Strip), Bright Stock Treating	MBD	26
26.	Centrifuge & Chilling	MBD	4
27.	MEK Dewaxing, Ketone Dewaxing, MEK-Toluene Dewaxing	MBD	24
28.	Deoiling (Wax)	MBD	11
29.	Naphthenic Lube Production	MBD	10
30.	SO_2 Extraction	MBD	3
31.	See Other Processes	MBD	-
32.	See Other Processes	MBD	-
33.	See Other Processes	MBD	-
34.	Wax Pressing	MBD	2
35.	Wax Plant (with Neutral Separation)	MBD	2
36.	Furfural Extracting	MBD	16
37.	Clay Contacting - Percolation	MBD	19
38.	Wax Sweating	MBD	5
39.	Acid Treat	MBD	6
40.	Phenol Extraction	MBD	11

Treating and Finishing

41.	Bender Treating	MBD	33
42.	Petreco Locap Gasoline Sweetening	MBD	2
43.	Asphalt Oxidizing (d)	MBD	49
44.	Caustic of KOH Treating, For example: Caustic of KOH Treating for: H_2S, Mercaptan, Cresylic Acid, Naphthenic Acid, PWS MEA for COS Removal, etc.	MBD	162
45.	Water Wash	MBD	99
46.	Mercapfining, Pentane Mercapfining	MBD	2
47.	Merox Treating (i.e., Liquid-Liquid Extraction, Liquid-Liquid Sweetening, and Fixed Bed)	MBD	114
48.	C_3 & C_4 Scrubbing, Girbitol Treating	MBD	46
49.	Linde Process (Charge)	MBD	7
50.	Doctor Treating	MBD	17
51.	Sulfuric Acid Treating	MBD	10
52.	Unisol Treating	MBD	2
53.	SO_2 Treating	MBD	3
54.	Hydrotreating (b)	MBD	62
55.	Perco (Copper Chloride), Copper Slurry	MBD	25
56.	Inhibitor Sweeting	MBD	44
57.	KCr	MBD	1
58.	Clay Treating, Bauxite Treating	MBD	93
59.	Hypochlorite Sweetening	MBD	4
60.	Salt Brightening or Drying	MBD	87
61.	Sulfinol	MBD	3
62.	Unclassified Treating and Finishing (Charge)	MBD	9

Petrochemicals

63.	Isobutane Production	MBD	16
64.	Carbon Black Feedstock Production	MBD	4
65.	Heptene Production	MBD	2
66.	Sulfolane Process (Charge)	MBD	5
67.	OxoAlcohol	MBD	1
68.	Naphthalene Production	MBD	1
69.	Butadiene	MBD	3
70.	Aliphatics	MBD	8
71.	Cumene (Charge)	MBD	10
72.	Paraxylene (Charge)	MBD	7
73.	Xylene Fractionation (Charge)	MBD	11
74.	Polypropene, Polyisobutylene, Poly Feed Preparation, Trimer-Tetramer Production	MBD	8
75.	Phenol, Oxonation Additives Mfg., Polystyrene Resin, Lube Oil Depressant Production	MBD	4
76.	Eliminated	MBD	-
77.	Cresylic Acid	MBD	2
78.	Styrene Production	MBD	2
79.	Naphthenic Acid	MBD	5
80.	Alpha Olefins	MLBD	1
81.	Nitric Acid	STD	1
82.	Phtahalic Anhydride Production	MBD	2

83.	Butyl Rubber	MLBD	1
84.	Polypropylene	MBD	2
85.	Cyclohexane Production	MBD	8
86.	Solvent Hydrotreater (b)	MBD	7
87.	Hexane-Heptane Unit	MBD	1
88.	Unclassified Petrochemicals	MBD	7

Other Processes

31.	Feed Preparation	MBD	1
32.	200°F Softening Point Unfluxed Asphalt (d)	MBD	5
33.	Compounding	MBD	29
89.	Asphalt Emulsifying (d)	MBD	30
90.	Sulfur Recovery, Sulfur Production (f)	LTD	82
91.	Hydrogen, Reformer Feed Prep, Steam Methane Reformer, Partial Oxidation (Liquid Units) (g)	MBD	37
92.	Gas Plant (Liquid Units) (g)	MBD	
93.	DEA Treating and Other Amine Treating Systems (Liquid Charge) (h)	MBD	37 59
94.	CO_2 Recovery, CO_2 Production	MLBD	7
95.	Furfural	MBD	0
96.	Dubbs Pitch	MBD	1
97.	Solvent Decarbonizing	MBD	7
98.	Hydrodemethylation(b)	MBD	5
99.	Catalyst Manufacture	STD	3
100.	Gasoline Additives Production	MBD	2
101.	Linear Paraffins	MBD	1
102.	Butadiene Concentration	MBD	0
103.	Nonene Production	MBD	4
104.	Ammonia Plants Production(e)	MLBD	6
500.	Light Ends Recovery	MBD	7
501.	Misc. Fractionation and Distillation	MBD	10
502.	Incineration	MLBH	4
503.	Sulfuric Acid Plant	STD	5
504.	Sodium Hydrosulfide	MBD	1
505.	Coke Calciner	STD	0
506.	Lube and Fuel Additives	MBD	5
508.	Sulfonate Plant	MBD	1
509.	Marasol Splitter	MBD	1
510.	Aromatic Hydrogenation	MBD	1
511.	Aromatic Vacuum Unit	MBD	1
512.	Sour Concetrate Unifiner	MBD	1
513.	Naphtha Splitter	MBD	4
514.	Naphtha Unifining	MBD	1
518.	Isobutylene	MLBD	2
519.	NEK	MBD	1
520.	Secondary Butyl Alcohols	MBD	1
521.	Mesityl Oxide	MBD	1
522.	MIBK	MBD	1
523.	Isophorone	MBD	1
524.	SNG	MBD	1
525.	Petroleum Pitch	MBD	1
526.	Hydroalkylation of Aromatics	MBD	1
528.	Naphtha Rerun	MBD	2
529.	Wax Slabbing	MBD	3
531.	Rust Preventives	MBD	1

532. Petrolatum Oxidation	MBD	1
533. Calcium Chloride Drying	MBD	2
534. LPG	MBD	6
535. Fuels Deasphalting	MBD	1
536. Ethylene	MLBD	2
537. Resin Former Stock	MBD	1
539. Rerun Units	MBD	4
540. Mineral Spirits	MBD	3
541. Udex	MLBD	4
542. Diallylamine	MLBD	1
544. Ethyl Amyl Ketone	MLBD	1
545. Ionol Antioxidant	MLBD	1
546. Tertiary Butyl Alcohol	MLBD	1
547. Naphthenic Acids	MLBD	1
548. Octyl Formol Alkylate	MLBD	1
549. Octyl Formol Condensate	MLBD	1
550. Perma 16	MLBD	1
551. Polyisobutylene Chloride	MLBD	1
552. Automotive Spec Detergent	MLBD	1
553. Pentoxone	MLBD	1
554. Sodium Sulfonates	MLBD	1
555. Tertiary Butyl Toluene	MLBD	1
556. TBBA - Caustic Extraction	MLBD	1
557. TBBA - Precipitation	MLBD	1
558. Tergols	MLBD	1
559. Dehydrating	MBD	1
560. Desiccant Manufacture	STD	1
562. Oxidate Manufacture	MBD	1
563. Grease Mfg. v. Allied Products	MBD	3
564. Tertiary Amylenes	MBD	1
565. Scot Tail Gas	MMSCFD	2
566. Propylene	MBD	6
567. Acetone	MBD	3
568. Misc. Blending and Packaging	MBD	4
569. Hydrogen, Reformer Feed Prep, Steam Methane Reformer, Partial Oxidation (Gas Units) (g)	MMSCFD	27
570. Gas Plant (Gas Units) (g)	MMSCFD	20
571. DEA and Other Amine Treating Systems (Gas Charge) (h)	MMSCFD	41
Number of plants responding to survey		262

Notes:

(a) Process Nos. 20 and 76 have been eliminated to avoid multiple accounting of process rates. Capacities and rates previously assigned to these processes have been included wth Process Nos. 8 and 9, where applicable.

(b) Multiple accounting of process rates may have occurred in the original survey response for the following hydrogen processes:

10. Hydrocracking	54. Hydrotreating
11. Hydroprocessing	86. Solvent Hydrotreater
21. Hydrofining, Hydrofinishing Lube Hydrofining	98. Hydrodemethylation

Revised values for Process Nos. 10 and 11 include only capacities and rates which cannot be included in the other four processes. Process No. 11 should include hydrotreating of upstream feedstocks (i.e., hydrodesulfurization of catalytic reformer feed), while Process No. 54 should include hydrotreating of product.

(c) To obtain consistent units of 1000 barrels/day, reported charge rates to Process No. 15 have been converted as follows:

tons/day x 0.00667 = 1000 barrels/day

(d) To avoid multiple accounting of process rates, asphalt processes have been specifically revised to include the following:

18. Asphalt Production	43. Asphalt Oxidizing
32. 200°F Softening Point Unfluxed Asphalt	89. Asphalt Emulsifying

Reported capacities and rates have been reassigned to the appropriate process.

(e) Multiple accounting of process rates occurred in the original response for Process Nos. 19 and 104. To resolve this problem, Process No. 19 has been eliminated and the capacities and rates previously included there have been reassigned to Process No. 104.

(f) To obtain consistent units of long tons/day, reported values for Process No. 90 have been converted (using specific gravity of 1.803) as follows:

1000 barrels/day X 282 = long tons/day

(g) Rates for Process Nos. 91 and 92 are in liquid units, while rates in gaseous units for the same processes are included in Nos. 569 and 570.

(h) Liquid charge rates have been included in Process No. 93 for all amine treating (DEA, MEA, etc), while gas charge rates have been assigned to Process No. 571.

Unit Abbreviations:

MBD - thousand barrels per day
MLBD - thousand pounds per day

TABLE III -7

STD - short tons per day
LTD - long tons per day
MLBH - thousand pounds per hour
MMSCFD - million standard cubic feet per day

TABLE III - 8

Qualitative Evaluation of Wastewater Flow and Characteristics by Fundamental Refinery Processes

Production Processes	Flow	BOD	COD	Phenol	Sulfide	Oil	Emulsified Oil	pH	Temp.	Ammonia	Chloride	Acidity	Alkalinity	Susp. Solids
Crude Oil and Product Storage	XX	X	XXX	X		XXX	XX	0	0	0		0		XX
Crude Desalting	XX	XX	XX	X	XXX	X	XXX	X	XXX	XX	XXX	0	X	XXX
Crude Distillation	XXX	X	X	XX	XXX	XX	XXX	X	XX	XXX	X	0	X	X
Thermal Cracking	X	X	X	X	X	X		XX	XX	X	X	0	XX	X
Catalytic Cracking	XXX	XX	XX	XXX	XXX	X	X	XXX	XX	XXX	X	0	XXX	X
Hydrocracking	X			XX	XX				XX	XX				
Polymerization	X	X	X	0	X	X	0	X	X	X	X	X	0	X
Alkylation	XX	X	X	0	XX	X	0	XX	X	X	XX	XX	0	XX
Isomerization	X													
Reforming	X	0	0	X	X	X	0	0	X	X	0	0	0	0
Solvent Refining	X		X	X	0		X	X	0			0	X	
Asphalt Blowing	XXX	XXX	XXX	X		XXX								
Dewaxing	X	XXX	XXX	X	0	X	0							
Hydrotreating	X	X	X		XX		0	XX		XX	0	0	X	0
Drying and Sweetening	XXX	XXX	X	XX	0	0	X	XX	0	X	0	X	X	XX

XXX = Major Contribution, XX = Moderate Contribution, X = Minor Contribution, 0 = Insignificant Blank = No Data

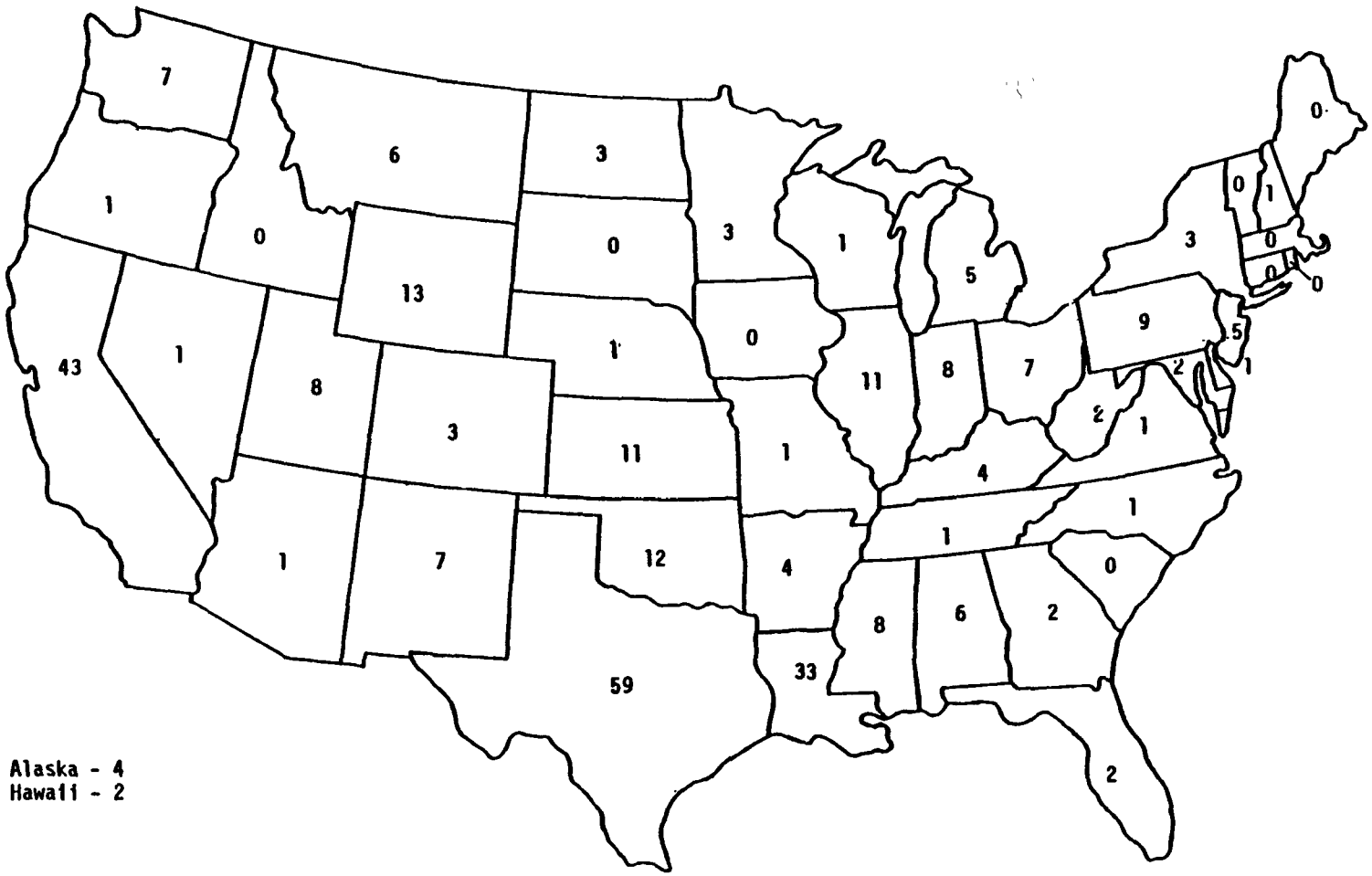

FIGURE III-1

GEOGRAPHICAL DISTRIBUTION OF PETROLEUM REFINERIES
IN THE UNITED STATES, AS OF JANUARY 1, 1981

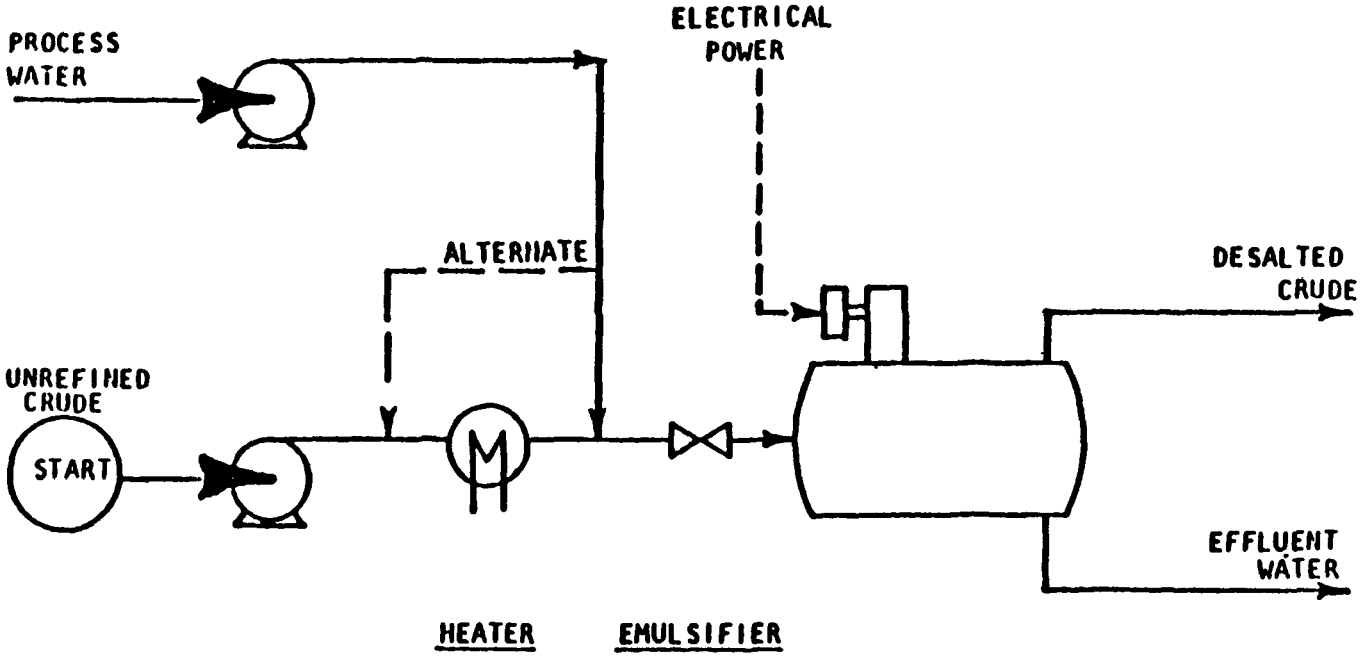

FIGURE III-2

CRUDE DESALTING
(ELECTROSTATIC DESALTING)

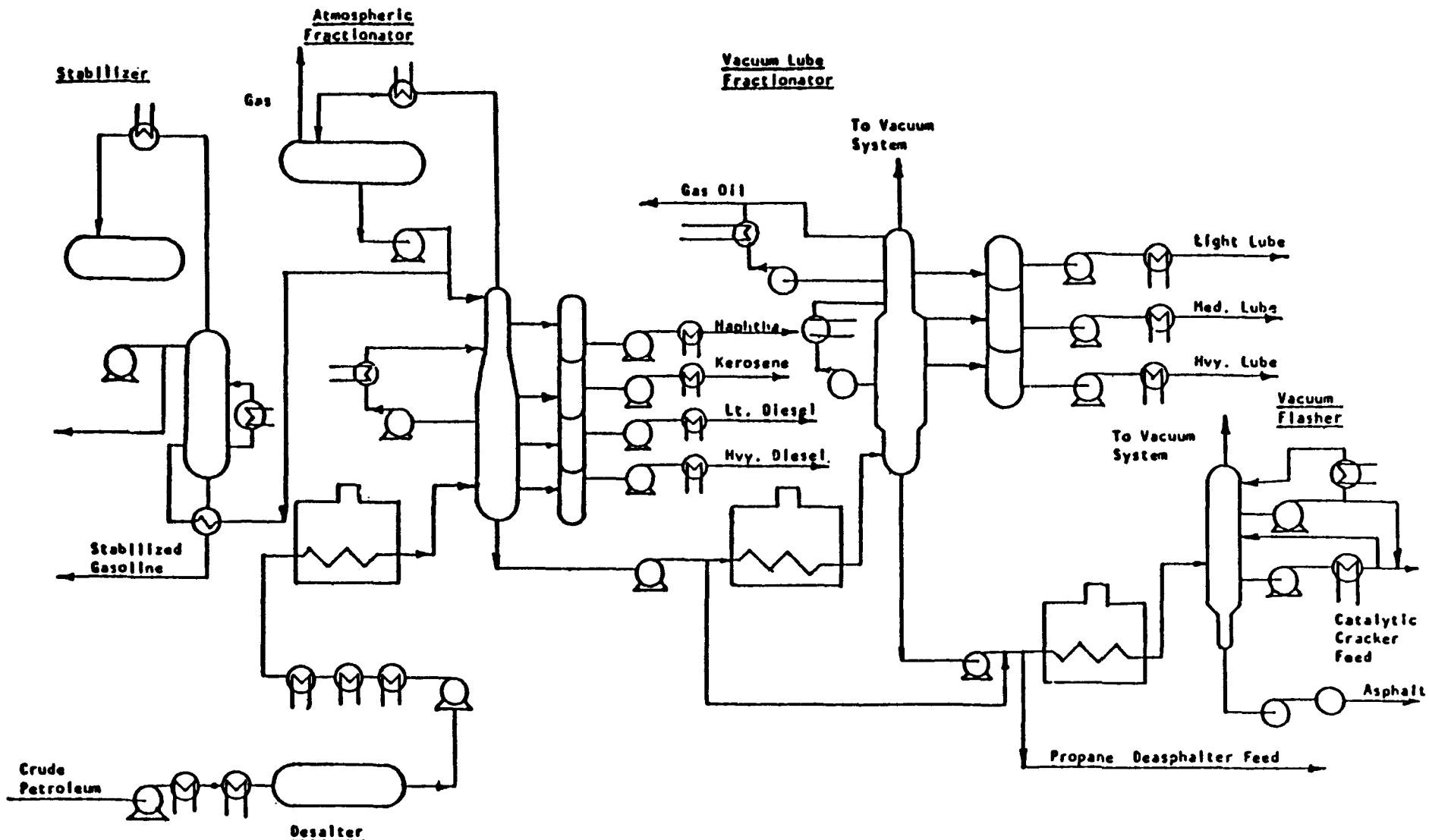

FIGURE III-3

CRUDE FRACTIONATION
(CRUDE DISTILLATION - THREE STAGES)

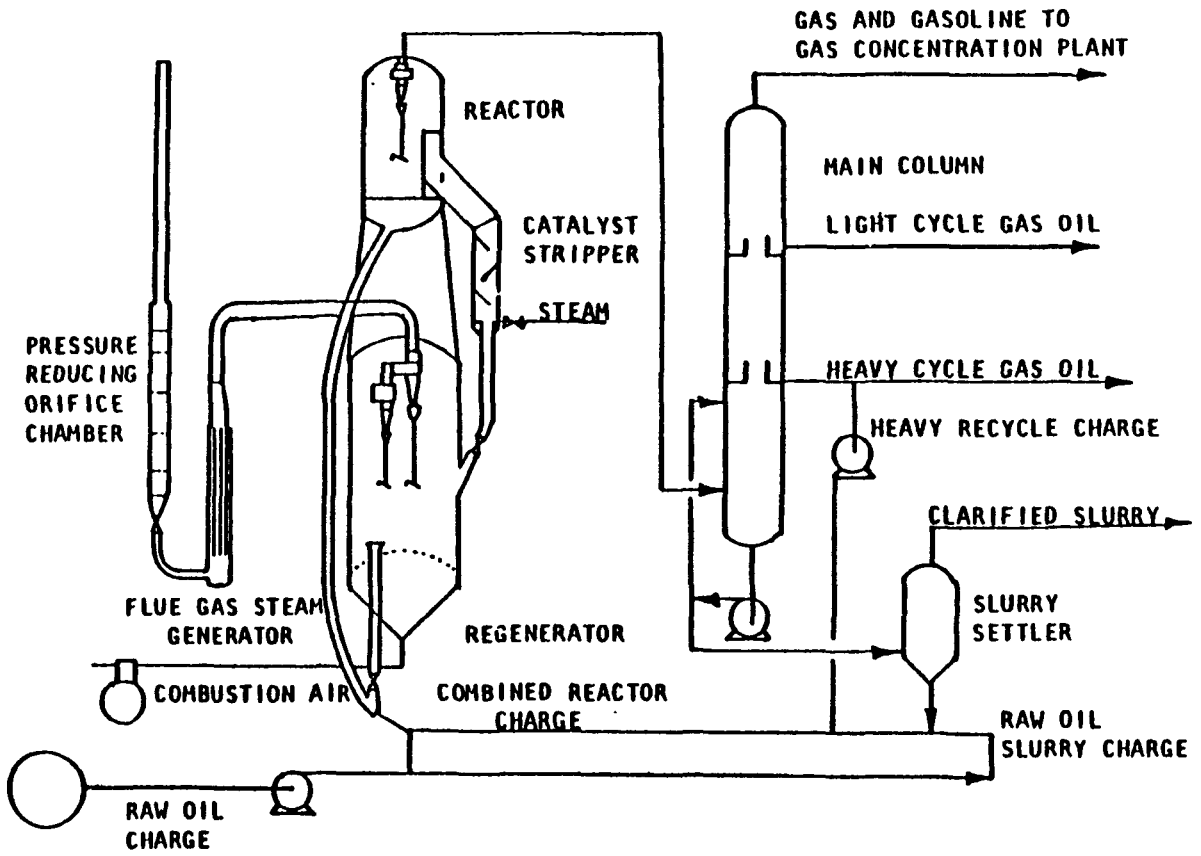

FIGURE III-4

CATALYTIC CRACKING
(FLUID CATALYTIC CRACKING)

SECTION IV

INDUSTRY SUBCATEGORIZATION

INTRODUCTION

The purpose of this section of the development document is to evaluate distinguishing refinery features which may require subclassification of the industry. Included here is a description of the selected subcategories, along with a discussion of the purpose and basis of this selection. The following items are addressed in the discussion of selection "purpose and basis":

the Flow Model for 1974 Regulation;

the Flow Model Used for Proposed 1979 Regulation; and

the Refined Flow Model.

SELECTED SUBCATEGORIES

Subcategorization of the petroleum refining industry was evaluated with respect to the traditional factors used to assess industries. However, the complexity of refining facilities (over 150 distinct processes are used in this industry) makes traditional subcategorization infeasible. Instead, the Agency used mathematical models that correlate achievable effluent flow with process variables as the basis for subcategorization. In the development of the 1974 regulations, the Agency found that the industry can be divided into five discrete subcategories:

- Topping Refineries
- Cracking Refineries
- Petrochemical Refineries
- Lube Refineries
- Integrated Refineries

The 1974 modeling effort developed five mathematical flow models which represented the best fit for those refineries within each subcategory. The models calculated discrete factors for refinery size, process configuration, and allowable wasteload which grouped the refineries within a subcategory in increments of production capacity and process configuration.

Data collected for the 1976 industry characterization work indicated that many refineries were making substantial improvements to their wastewater management systems. The 1976 data base sampled twice the number of refineries that contributed to the 1974 flow modeling effort.

In 1976 the U.S. Court of Appeals upheld the 1974 BPT and NSPS regulations, but remanded the more stringent BAT regulations (the 1974 BAT limitations were calculated using the 1974 flow model). Analysis of the expanded 1976 data base suggested that an alternative modeling approach which treated each refinery as an individual was possible to support a more stringent regulation. The flow model for the 1979 proposed regulation consisted of a single flow model capable of treating each refinery, essentially, as a separate subcategory. This model would calculate the industry average wastewater generation for any combination of processes. The petroleum refining industry found certain mathematical and conceptual discrepancies in the 1979 flow model which were reconciled with the "refined" flow model. This single model, in its final revised form, could serve as the basis for developing more stringent limitations tailored to each refinery's wastewater management potential as compared to industry average performance. The refined flow model resulted in possible BAT effluent limitations only slightly less stringent than those calculated by the 1979 flow model.

Recent analyses by the Agency of the actual performance of properly operated BPT technology treating refinery wastewaters has concluded that these refineries are providing adequate control of non-conventional and toxic priority pollutants. EPA is establishing the effluent limitations based upon BPT technology which was upheld in the U.S. Court of Appeals. The pollutant load factors calculated by using the 1974 model, achievable concentrations and variability factors insure adequate treatment.

PURPOSE AND BASIS OF SELECTION

Section 304(b)(2)(B) of the Act requires EPA to take the following factors into account in assessing best available technology: (a) age of equipment and facilities involved, (b) the process used, (c) the engineering aspects of applying various types of control technology, (d) process changes, (e) the cost of achieving such effluent reduction, (f) non-water-quality environmental impacts (including energy requirements), and (g) other factors that the Administrator deems appropriate. The assessment for best conventional pollutant control technology includes these factors plus an evaluation of "...the reasonableness of the relationship between the costs of attaining a reduction in effluents and the effluent reduction benefits derived, and the comparison of the cost and level of reduction of such pollutants from the discharge from publicly owned treatment works to the cost and level of reduction of such pollutants from a class or category of industrial sources....".

The Agency considered each factor in establishing effluent limitations for this industry. Factors that significantly differentiate groups of facilities generally serve as the basis

for industry subcategorization. Each subcategory then develops its own technologies representative of BAT, BCT, or BADT.

In developing BAT, the Agency analyzed each of the statutory factors to determine whether they significantly affect the ability of any group of refineries to meet uniform limitations. None of the factors were found to significantly affect the ability of refineries to meet effluent concentrations. The effluent flow, however, is significantly dependent on the processes used. Information compiled since the 1974 regulation supports this assessment. The long-term effluent study that is described in Section V of this report confirms that the BPT concentrations can be achieved by refineries regardless of age, process, and engineering aspects of applying various types of control technology. The revised flow model that is described in this section indicates that flow is dependent on the processes used.

In determining the flow to use in developing quantitative effluent guidelines, the Agency used mathematical models that correlate effluent flow with process variables. A brief description of each model is provided below:

Flow Model For 1974 Regulation

Current BPT limitations for the refining industry are based on a linear model of industry effluent flows. This BPT model was developed using process and flow data from the 1972 EPA-API industry survey and appears as:

$$Y = A_o + A_1X_1 + A_2X_2$$

With components,

$Y = \text{Log}_{10}$ (total flow/capacity)

A_o = Subcategory dependent constant

A_1, A_2 = Regression coefficient constants (1.51 and 0.0738, respectively)

X_1 = Refinery throughput

X_2 = Sum of weighting factors for a particular refinery.

For the development of BPT regulations, the equation was mathematically transformed from the standard slope-intercept representation shown above to a form denoting deviation from a subcategory average value. The refinery process weighting factors are the normalized coefficients of the regression model:

$$Z = A_o + \sum_{i=1}^{n} A_iX_i$$

where

Z = effluent flow

A_o = regression constant

A_i = regression constant (weighting factor) corresponding to the ith petroleum refining process.

X_i = throughput for process i.

BPT subcategorization was designed to give overall minimum variance to the system; i.e., variance within each subcategory was minimized and the differences between the subcategories were maximized. A more detailed discussion of this flow model is found in the 1974 development document (3).

The model adopted for the 1974 regulation subcategorizes the industry into five groups: topping, cracking, petrochemical, lube, and integrated refineries. The model estimates the flow from each refinery in units of gallons of wastewater per thousand barrels of crude throughput. Refineries in the United States and its territorial possessions fall into one of the following five subcategories:

Subcategory	Basic Refinery Operations Included
Topping	Topping and catlytic reforming whether or not the facility includes any other process in addition to topping and catalytic reforming. This subcategory is not applicable to facilities which include thermal processes (coking, visbreaking, etc.) or catalytic cracking.
Cracking	Topping and cracking, whether or not the facility includes any processes in addition to topping and cracking, unless specified in one of the subcategories listed below.
Petrochemical	Topping, cracking and petrochemical operations, whether or not the facility includes any process in addition to topping, cracking and petrochemical operations,* except lube oil manufacturing operations.
Lube	Topping, cracking and lube oil manufacturing processes, whether or not the

	facility includes any process in addition to topping, cracking and lube oil manufacturing processes, except petrochemical operations.*
Integrated	Topping, cracking, lube oil manufacturing processes, and petrochemical operations, whether or not the facility includes any processes in addition to topping, cracking, lube oil manufacturing processes and petrochemical operations.*

*The term "petrochemical operations" shall mean the production of second generation petrochemicals (i.e., alcohols, ketones, cumene, styrene, etc) or first generation petrochemicals and isomerization products (i.e., BTX, olefins, cyclohexane, etc.) when 15% or more of refinery production is as first generation petrochemicals and isomerization products.

In the recent toxics review program, the Agency reassessed the 1974 flow model in light of the more current data from the 1977 Survey for the purpose of determining achievable flow reduction.

Flow Model Used For Proposed 1979 Regulation

The Agency analyzed the refining industry's discharge flow for the year 1976. Data Collected for the 1976 industry survey indicated that many refineries were making substantial improvements to their wastewater management systems. The expanded data base (including approximately twice the number of refineries covered in the 1972 data base) was suitable for the development of an alternate modeling approach. In general, the industry reduced discharge flow significantly between 1972 (BPT data base) and 1976. A revised mathematical model was developed that more closely described the industry flow of 1976.

This model differed from the BPT flow models in that it is additive in form as opposed to the multiplicative form of the BPT model. Also, a single flow model includes all refineries compared to a separate model for each subcategory.

This model was used in the proposed regulation for the petroleum refining guidelines of December 1979 and it takes the following form:

$$FLOW = 0.004C + 0.046K + 0.048\ (A + L).$$

Flow is in units of million gallons per day. A,C,K,L are in units of thousands of barrels per day throughput. Constants are in units of million gallons per thousand barrels per day.

Where,

A = sum of asphalt processes

Asphalt Production
Asphalt Oxidizer
Asphalt Emulsifying

K = sum of cracking processes
Hydrocracking
Visbreaking
Thermal Cracking
Fluid Catalytic Cracking
Moving Bed Catalytic Cracking

C = sum of crude processes
Atmospheric Crude Distillation
Crude Desalting
Vacuum Crude Distillation

L = sum of lube processes
Hydrofining, Hydrofinishing, Lube Hydrofining
White Oil Manufacture
Propane Dewaxing, Propane Deasphalting, Propane Fractioning, Propane Deresining
Duo Sol, Solvent Treating, Solvent Extraction, Duotreating, Solvent Dewaxing, Solvent Deasphalt
Lube Vac Twr, Oil Fractionation, Batch Still (Naphtha Strip), Bright Stock Treating
Centrifuge and Chilling
MEK Dewaxing, Ketone Dewaxing, MEK-Toluene Dewaxing
Deoiling (wax)
Naphthenic Lubes Production
SO_2 Extraction
Wax Pressing
Wax Plant (with Neutral Separation)
Furfural Extracting
Clay Contacting - Percolation
Wax Sweating
Acid Treat
Phenol Extraction
Lube and Fuel Additives
Sulfonate Plant
MIBK
Wax Slabbing
Rust Preventives
Petrolatum Oxidation
Grease Mgf. v. Allied Products
Misc. Blending and Packaging

The model for the 1979 proposal does not classify refineries into discrete subcategories. Instead, it estimates the flow from each in-plant process. Regulation based on this model would provide allocation which would equal the summation of the loading calculated for each of the process throughputs.

Refined Flow Model

Significant industry comments questioned the technical accuracy and statistical validity of the model as applied to all petroleum refineries in the industry. In response, the Agency refined the flow model for the 1979 proposal to consider those factors.

The resulting model is the following:

$$FLOW = 0.0021C + 0.0127A + 0.0236K + 0.0549L + 0.0212R$$

Where:

FLOW = Net Process Wastewater in million gallons/day
C = Sum of Crude Process Rates in 1000 bbl/day
A = Sum of Asphalt Process Rates in 1000 bbl/day
K = Sum of Cracking and Coking Process rates in 1000 bbl/day
L = Sum of Lube Process Rates in 1000 bbl/day
R = Sum of Reforming and Alkylation Process Rates in 1000 bbl/day
and where:

Crude Processes are defined as:

P1, P2, and P3

Asphalt Processes are defined as:

P18, P32, P43,and P89

Cracking and Coking Processes are defined as:

P4, P5, P6, P7, P10, P15, P16, and P54

Lube Processes are defined as:

P21, to P30 and P34 to P40

Reforming and Alkylation Processes are defined as:

P8 and P12

In accordance with the EPA process identification numbers for the following refinery processes:

1. Atmospheric Crude Distillation
2. Crude Desalting
3. Vacuum Crude Distillation
4. Visbreaking
5. Thermal Cracking
6. Fluid Catalytic Cracking
7. Moving Bed Catalytic Cracking
8. H_2SO_4 Alkylation
10. Hydrocracking
12. Catalytic Reforming

15. Delayed Coking
16. Fluid Coking
18. Asphalt production
21. Hydrofining, Hydrofinishing, Lube Hydrofining
30. SO_2 Extraction
32. 200 °F Softening Point Unfluxed Asphalt
34. Wax Pressing
40. Phenol Extraction
43. Asphalt Oxidizing
54. Hydrotreating
89. Asphalt Emulsifying

Similar to the model for the 1979 proposal, the allocation for each refinery would be equal to the sum of the loading for each of the in-plant processes.

The methodology utilized to develop this model as well as a complete evaluation of model performance is contained in the Burns and Roe report "Draft, Petroleum Refining Industry, Refinements to 1979 Proposed Flow Model and Supplemental Documentation" (164).

This flow model is different and significantly better than the one used for the proposed regulations of December 1979. This model incorporates statistical improvements as well as updated information. It should be noted that the refined model provides allocation for Coking, Reforming and Alkylation processes. Allocation was not provided for these processes in the 1979 proposed flow model. Although Reforming and Alkylation are found to influence discharge flow in the refined model, these processes should not be considered in calculating BPT limitations because the model developed for BPT is different. This is because the wastewaters from these processes were already considered in the 1974 BPT model, which generally predicts a higher flow rate than the refined model.

The model evaluation study reaffirms the finding of the BPT effort that the only refinery characteristics which should be considered in the development of effluent limitations and standards are the size and types of processes utilized at individual refineries.

SECTION V

WASTE CHARACTERIZATION

INTRODUCTION

The purpose of this section is to describe the waste characterization efforts undertaken and the results obtained by the Agency in the development of the limitations and standards which are addressed in this document. Refinery wastewater characterization efforts are described here in two parts:

a) the concentration of pollutants; and

b) the rate of flow.

The Agency conducted several studies to determine the flow and concentration of toxic, non-conventional, and conventional pollutants from the petroleum refining industry. These studies included extensive questionnaire surveys and sampling at refineries of treated and untreated wastewater.

The Agency defined the industry's discharge flow practices by distributing a questionnaire (1977) which requested information on the quantity of wastewater generated and discharged. The questionnaires were sent to all the refineries in the United States and its territorial possessions. Information representative of industry's production and treatment practices during 1976 was requested.

Several major programs were implemented to define the presence of toxics and other pollutants from the petroleum refining industry. As required under the Consent Decree Agreement between EPA and NRDC, the Agency was to determine whether control of the discharge of 65 classes of toxic pollutants would be needed. These 65 classes of toxic pollutants potentially included thousands of specific compounds. The Agency in 1977 selected 123 toxic pollutants for analyses. This list of 123 is now expanded to include 126 priority pollutants (PP). Most of the sampling was conducted in 1977-78. Sampling and analytical methodologies, including quality control and quality assurance procedures, were not fine-tuned at that time to quantify low level toxics. The results from these programs, however, were adequate to determine the presence, absence and relative concentrations of toxic pollutants.

Three major efforts were conducted. The first task was to request data from the industry on: (a) toxic pollutants purchased, manufactured, and analyzed in wastewater; and (b) treatability data on toxic pollutants. The second program was to sample 23 refineries and two POTW receiving refinery wastes for a

three day period. The third effort was to sample two refineries for a period of 60 days to determine long-term wastewater characteristics. The first two programs were conducted in 1977-1978 while the third program was conducted in 1980. In general, toxic pollutants were found in the untreated refinery wastes, but most were reduced to very low levels after BPT treatment systems. Details on each of these programs follow.

The Agency also compiled and analyzed one full year of self-monitoring effluent data which was provided by 49 refineries for the calendar year 1979. This data gathering effort was referred to as "The Survey of 1979 Effluent Monitoring Data for the Petroleum Refining Point Source Category."

CONCENTRATIONS OF TOXIC, CONVENTIONAL AND NON-CONVENTIONAL POLLUTANTS

The Agency directed three major efforts toward the characterization of petroleum refinery wastewater quality: a detailed questionnaire survey of the industry (1977 Survey); and two wastewater sampling programs - one long-term and one short-term. In addition, the Agency evaluated effluent monitoring data for the calendar year 1979 reported by the 49 refineries.

1977 Survey

A comprehensive questionnaire was sent to all refineries in the United States and its territorial possessions in 1977. The questionnaire requested the following information: (1) chemicals purchased or manufactured (final or intermediate) which contain the 123 toxic pollutants; and (2) NPDES limitations on toxics other than chromium. The list of 123 toxic pollutants was used in the 1977 mailing and the following compounds were subsequently added to form a list of 129 toxic pollutants:

- Di-n-octyl phthalate
- PCB 1221 (Arochlor 1221)
- PCB 1232 (Arochlor 1232)
- PCB 1248 (Arochlor 1248)
- PCB 1260 (Arochlor 1260)
- PCB 1016 (Arochlor 1016)

Since that time, three of the compounds in the original listing have been removed from the list of priority pollutants leaving a total of 126 pollutant compounds designated by the Agency (FR 10723, 2/4/81 and FR 2266, 1/8/81). The survey responses indicated that 71 toxic pollutants were purchased as raw or intermediate materials; 19 of these are purchased by single refineries. At least 10 percent of all refineries purchase the following toxic pollutants:

- Benzene

- Carbon tetrachloride
- 1,1,1-trichloroethane
- Phenol
- Toluene
- Zinc and compounds
- Chromium and compounds
- Copper and compounds
- Lead and compounds

Zinc and chromium are purchased by 28 percent of all refineries, while lead is purchased by nearly 48 percent of all plants.

Forty-five priority pollutants are manufactured as final or intermediate materials; 15 of these are manufactured at single refineries. Benzene, ethylbenzene, phenol, and toluene are manufactured by at least 10 percent of all refineries. Eight percent of all refineries manufacture cyanides; greater than 20 percent manufacture benzene/toluene.

Short Term Sampling program

Since the data obtained from the 1977 Survey was limited with respect to toxic pollutant data, the Robert S. Kerr Environmental Research Laboratory (RSKERL) (an EPA Laboratory) and Burns and Roe (an EPA contractor) conducted a three-day sampling program at each of 17 direct discharging refineries. Table V-1 is a summary of plant characteristics for these refineries. Table V-2 is a comparison of plant characteristics of the 17 refineries sampled versus the overall industry characteristics. The purpose of this sampling program was to obtain more complete information on the occurrence of toxic pollutants in refinery waste streams. The results of this program are presented in Tables V-3 through V-20.

The effluents from 6 indirect discharging refineries, which discharge their wastewater to a POTW, were sampled by Burns and Roe in a supplemental sampling program. The results of this study are presented in Tables V-21 through V-26.

Samples were collected before and after the biological treatment systems. In some instances, samples were taken after polishing (i.e., polishing pond, sand filter). The intake water was also sampled to determine the presence of toxic pollutants before contamination by refining processes.

Samples for conventional, nonconventional, and toxic pollutants (except for volatile organics, total phenols, and cyanide) were taken from 24-hour composite samples. The laboratory combined aliquots from these samples in equal portions to obtain the 72-hour composites for toxic pollutant analysis (acid and base-neutral extractible organics, pesticides, and metals). Grab samples were taken in specially prepared vials for volatile (purgeable) organics, total phenols and cyanide. Before plant visits, sample containers were carefully washed and prepared by

appropriate methods, depending on the type of sample. Samples were kept on ice for express shipment in insulated containers.

The analyses for toxic pollutants were performed according to groups of chemicals and associated analytical schemes. Organic toxic pollutants included volatile (purgeable), base-neutral and acid (extractable) pollutants, and pesticides. Inorganic toxic pollutants included heavy metals, cyanide, and asbestos.

The primary method used to screen and verify the volatiles, base-neutral, and acid organics was gas chromatography (GC) with confirmation and quantification of all priority pollutants by mass spectrometry (MS). Total phenols was analyzed by the 4-AAP method. GC was used to analyze pesticides with limited MS confirmation. Toxic heavy metals were analyzed by atomic absorption spectrophotometry (AAS), with flame or graphite furnace atomization following appropriate digestion of the sample. Duplicate samples were analyzed using plasma emission spectrometry after appropriate digestion. Samples were analyzed for cyanides by a colorimetric method, with sulfide previously removed by distillation. Analysis for asbestos was accomplished by microscopy and fiber presence reported as chrysotile fiber count. Non-dispersive x-ray fluorescence was used for confirmation. Conventional pollutants (BOD_5, TSS, pH, and oil and grease) and nonconventional pollutants (TOC and COD) were analyzed using "Methods for Chemical Analysis of Water and Wastes," (EPA 625/6-74-003) and amendments.

The most common pollutants found (detected in more than half the samples analyzed) include:

Fraction	Pollutant	Percent of Samples Where Detected	BPT Limited
Conventionals	BOD	100	Yes
	Total Susp. Solids	100	Yes
	Oil & Grease	100	Yes
Non-Conventionals	Ammonia Nitrogen	100	Yes
	COD	100	Yes
	TOC	100	Yes
	Sulfide	100	Yes
	Phenol (4AAP)	76	Yes
Volatiles	Methylene Chloride	69	No
Metals	Chromium	78	Yes
	Copper	54	No
	Mercury	74	No
	Selenium	68	No
	Zinc	80	No

Of the 126 toxic pollutants, 22 were detected and quantified more than once in all final effluent samples analyzed from direct discharges and 28 were detected and quantified more than once in all final effluent samples from indirect discharges. Table V-27 is a summary of the final effluent priority pollutant data from the 17 refineries' screening program. Table V-28 is a summary of the indirect discharge priority pollutant effluent data from the pretreatment program.

Samples were analyzed for asbestos at only four refineries. Asbestos was not detected in the intake or effluent from these refineries. One API separator effluent (prior to treatment) sample contained 3.4 million asbestiform mineral fibers per liter. However, the presence can be attributable to rain occurring during the sample collection period.

Additional toxic pollutant data was obtained from another eight direct discharging refineries by the EPA Regional Surveillance and Analysis teams during routine monitoring operations. The data extracted from single grab-samples taken at each of the refineries is summarized in Table V-29. The concentrations and pollutants detected are similar to those of the seventeen refinery program.

Long-Term Sampling Program

A long-term sampling program was conducted at two refineries for a period of sixty days.(162) The purposes were: (1) to determine if there is a surrogate relationship between the priority pollutants and one or more of the traditional pollutant parameters; and (2) to confirm the presence or absence of specific priority pollutants. Samples of the untreated and treated wastewaters were collected every other day. Pollutant parameters analyzed include the BPT regulated pollutants and the toxics, excluding pesticides and asbestos. The sampling and analytical methods used are similar to those described in the short-term sampling program discussion. The results from this program are summarized in Tables V-30 and 31.

In general, the types of pollutants and the concentration ranges are similar to those found in the short term program. The data also indicate that a strong correlation does not exist between the toxics and the traditional pollutant parameters.

The 30-day samples from the two plants were statistically analyzed to determine if surrogates for important pollutants could be found. Surrogates were sought for five pollutants: priority pollutant (PP) organics, total organics (PP organics plus Appendix C alkanes), extractables, PP metals, and total metals (PP metals plus a set of non-conventional metals). Seven potential surrogates were: BOD, COD, total phenol (4AAP), TOC, TSS, oil and grease, and chromium.

To be acceptable, a surrogate must demonstrate a statistically significant correlation with the pollutant and it must allow the level of the pollutant to be estimated with satisfactory accuracy.

Since the data samples were relatively small, the sensitivity of statistical analysis to the presence of apparent outliers was assessed by plotting surrogates against pollutants and by rerunning analyses with outliers removed. The findings of the study, however, were not influenced by these precautionary measures. Only two possible surrogates were identified, namely, total phenol (4AAP) for PP organics and for total organics, and chromium for PP metals and for total metals. However, as can be seen from Table V-32, statistical significance was obtained only in one plant. Because surrogate adequacy must be consistent across plants, the relationship was found to be invalid. In addition, the predictive adequacy, even for the single plant, is not sufficient to allow practical application of these two surrogates.

SURVEY OF 1979 EFFLUENT MONITORING DATA

The Agency also compiled and analyzed one full year of self monitoring data supplied by 49 refineries covering the 1979 calendar year. EPA selected 50 refineries (163) on the basis that each reported BPT technology in place in the 1976 survey. Moreover, 25 of the 50 were examples of refineries reporting process wastewater flows equal to or less than BAT Option 2 model flow. Another 15 of the 50 reported flows equal to or less than 1979 BAT Option 1 model flow. (See Section VIII for details of Options proposed for BAT in 1979).

This study was investigating the effects of BPT treatment where the total refinery wastewater is less than 1979 proposed model flows and therefore, 37 of the 50 refineries selected could be described as low flow refineries. Objectives of the study were to calculate variability factors, determine average effluent concentration for phenolic compounds (4AAP), examine TOC and cyanide as possible surrogate parameters, calculate refinery model flow for 1978 and verify the reported flow level.

Review of the data to determine those refineries that actually meet BPT performance levels appears in Preliminary Screening of the 1979 Effluent Monitoring (BPT) DATA (160). Statistical analysis of the same data set is reported in Petroleum Refining Self Monitoring Data Analysis (161).

INDUSTRY FLOW

Results of the Agency's efforts in the characterization of the rate of wastewater flow from the petroleum refinery industry are described below.

These results are in three parts: 1) summary data by refinery size; 2) data on distribution by refinery subcategory; and 3) water usage trends.

Summary of Net Wastewater Flow

Figure V-1 presents a histogram of net flow for 243 refineries which provided the necessary data. Each point on the histogram represents a single refinery by its size class using the letters A through D which represent selected size ranges in 1000 bbl of crude processing capacity. The results of this histogram are summarized in Table V-33.

Although it can be seen that nearly 75 percent of total water usage in the industry is attributable to about 20 percent of the refineries, these refineries process a large majority of crude petroleum.

Distribution of Flow by Subcategory

Figure V-2 presents a histogram of net flow for the same 243 refineries according to the subcategorization procedure described in Section IV. Similar to the previous figure, each point depicts a single refinery. Letter designations correspond to the five selected subcategories:

A - Topping

B - Cracking

C - Petrochemical

D - Lube

E - Integrated

This histogram is summarized in Table V-34.

This summary shows that, except for Topping Refineries, the fractional share of industry water usage is approximately equally distributed among the other four subcategories. However, the subcategory averages show wide disparity, ranging from 0.128 MGD for the topping subcategory to 9.327 MGD for the Integrated subcategory.

The histograms in Figures V-1 and V-2 reveal a striking consequence of the skewed (non-symmetrical) distribution in

wastewater flow. This consequence is the large difference between the industry average of 1.7 MGD and the industry median (50-percentile) value of about 0.5 MGD.

Trends in Industry Water Usage

Figure V-3 presents the historical trends in industry water usage from data contained in various surveys conducted by the Agency. The first survey data is the 1972 EPA/API Raw Waste Load Survey. This value is used as the baseline for further comparison. The 1977 Survey results provided the next value for calendar year 1976. Total flow in absolute units as well as a gallon/barrel value (adjusting for increased process capacity) was calculated for the same refineries surveyed in 1972. The results demonstrate that a significant reduction in water usage had occurred during the previous four year period. On an absolute basis, total water usage was reduced to about 67 percent of the 1972 value. On a gallon/barrel basis, the reduction was even greater - up to 53 percent of the 1972 value.

The "Survey of 1979 Effluent Monitoring Data" (160) also provided information which was used to evaluate industry water usage. Since this survey was directed towards only 50 specific refineries, 37 of which had the lowest flow rates, particular care was taken to prevent the underestimation of industry flow. For this purpose, the sum of the flows of the 49 respondents to this questionnaire was compared to the sum of the 1976 flows from the same refineries. Although the flows of some individual refineries increased, the total flow in 1979 was found to be significantly lower than the 1976 flow on both an absolute and a gallon per barrel basis.

The two curves in Figure V-3 were extrapolated to the year 1984, the earliest year in which BAT limitations could take effect. It can be seen that the total water usage of the industry could potentially reach 42 percent of the year 1972 value (or 62.5 percent of the 1976 average) by 1984 if the current trend continues. On a gallon/barrel basis, water usage could potentially reach 29 percent of the 1972 value (40 percent of the 1976 average value).

TABLE V-1

Summary of Plant Characteristics
for 17 Refineries Sampled
in Screening Program

Refinery Number	Location State	EPA Region	1000 barrels/ Stream-day	Sub-category
1	Alabama	IV	30.0	A
20	California	IX	100.0	B
50	Colorado	VII	21.5	B
59	Illinois	V	57.0	B
64	Illinois	V	78.0	B
80	Kansas	VII	52.0	B
84	Kansas	VII	80.0	C
126	Montana	VIII	46.0	B
153	Ohio	V	125.0	C
157	Oklahoma	VI	130.3	D
167	Pennsylvania	III	195.0	B
169	Pennsylvania	III	188.0	B
186	Texas	VI	185.0	C
194	Texas	VI	405.0	E
205	Texas	VI	103.4	C
235	Washington	X	94.0	B
241	West Virginia	III	12.0	A

TABLE V-2

Comparison of Plant Characteristics
17 Refineries Sampled vs. Overall Industry

	Percent Distribution of Plants	
EPA Region	Overall Industry (Direct Discharge Segment)	17 Refineries Sampled
I	0	0
II	5	0
III	9	18
IV	9	6
V	17	18
VI	35	24
VII	5	12
VIII	8	12
IX	7	5
X	5	5
	100	100
Subcategory		
A	27	12
B	45	53
C	12	24
D	11	6
E	5	5
	100	100
Crude Capacity (1000 bbl/day)		
0 - 49	49	18
50 - 99	22	35
100 - 199	18	41
≥ - 200	11	6
	100	100

TABLE V-3

SUMMARY OF ANALYTICAL DATA
PETROLEUM REFINING INDUSTRY
SCREENING SAMPLING PROGRAM

FACILITY 1

FRACTION	PARAMETER	UNITS	INTAKE	API SEPARATOR EFFLUENT	FINAL EFFLUENT
CONVENTIONALS	COD	MG/L	5	107	35
	BOD	MG/L	2	23	1
	TOTAL SUSP. SOLIDS	MG/L	3	380	59
	PH	UNIT	9	9	7
NON-CONVENTIONALS	AMMONIA NITROGEN	MG/L	4	12	12
	TOC	MG/L	2	29	11
	SULFIDE	UG/L	67	8133	267
VOLATILES	BENZENE	UG/L	N-D	G 100	N-D
	CHLOROFORM	UG/L	70	L 5	L 5
	1,2-TRANS-DICHLOROETHYLENE	UG/L	N-D	20	N-D
	ETHYLBENZENE	UG/L	N-D	G 100	N-D
	METHYLENE CHLORIDE	UG/L	G 100	G 100	G 100
	TETRACHLOROETHYLENE	UG/L	N-D	G 50	L 10
	TOLUENE	UG/L	N-D	G 100	N-D
ACID EXTRACT	PHENOL	UG/L	N-D	13	N-D
BASE-NEUTRALS	ACENAPHTHENE	UG/L	N-D	37	N-D
	NAPHTHALENE	UG/L	N-D	68	N-D
	DI-N-BUTYL PHTHALATE	UG/L	L 1	1	1
	DIETHYL PHTHALATE	UG/L	N-D	12	N-D
	ACENAPHTHYLENE	UG/L	N-D	4	N-D
	PHENANTHRENE	UG/L	N-D	5	N-D
METALS	ARSENIC	UG/L	L 10	12	L 10
	CHROMIUM	UG/L	L 24	12	1
	COPPER	UG/L	L 5	26	2
	CYANIDE	UG/L	L 10	50	L 30
	LEAD	UG/L	L 60	132	L 60
	MERCURY	UG/L	L 1	L 1	L 1
	NICKEL	UG/L	L 50	5	L 50
	ZINC	UG/L	37	263	57
NON-CONV. METALS	HEX-CHROMIUM	UG/L	L 20	57	13
MISC.	PHENOLICS (4AAPO)	UG/L	L 11	97	3

POLLUTANTS NOT LISTED WERE NEVER DETECTED
L-LESS THAN; N-D NOT DETECTED; E-ESTIMATED OR VALUE NOT QUANTIFIED OR CONFIRMED; G-GREATER THAN;

TABLE V-4

SUMMARY OF ANALYTICAL DATA
PETROLEUM REFINING INDUSTRY
SCREENING SAMPLING PROGRAM

FACILITY 20

FRACTION	PARAMETER	UNITS		INTAKE		P/C TREATMENT EFFLUENT		FINAL EFFLUENT
CONVENTIONALS	COD	MG/L		9		453		130
	BOD	MG/L		1		173		14
	TOTAL SUSP. SOLIDS	MG/L		11		42		22
	OIL & GREASE	MG/L		11		21		31
	PH	UNIT		8		9		7
NON-CONVENTIONALS	AMMONIA NITROGEN	MG/L	L	1		7		17
	TOC	MG/L		19		107		43
	SULFIDE	UG/L		267		933		533
VOLATILES	CHLOROFORM	UG/L	L	10		11	L	10
	METHYLENE CHLORIDE	UG/L		22		30		N-D
ACID EXTRACT	2,4-DIMETHYLPHENOL	UG/L		N-D		10000	L	10
METALS	CADMIUM	UG/L		1		1		2
	CHROMIUM	UG/L		34		44		46
	COPPER	UG/L		22		7	L	6
	CYANIDE	UG/L	L	20		43	L	20
	LEAD	UG/L		48	L	20	L	20
	NICKEL	UG/L		9	L	15	L	15
	SILVER	UG/L		1	L	5	L	5
	ZINC	UG/L		36		6		5
NON-CONV. METALS	HEX-CHROMIUM	UG/L		7		33	L	20
MISC.	PHENOLICS (4AAPO)	UG/L	L	10		29333		52

POLLUTANTS NOT LISTED WERE NEVER DETECTED
L-LESS THAN; N-D NOT DETECTED; E-ESTIMATED OR VALUE NOT QUANTIFIED OR CONFIRMED; G-GREATER THAN;

TABLE V- 5

SUMMARY OF ANALYTICAL DATA
PETROLEUM REFINING INDUSTRY
SCREENING SAMPLING PROGRAM

FACILITY 50

FRACTION	PARAMETER	UNITS	INTAKE (WELLS)	DAF UNIT EFFLUENT	BIO-TREATMENT EFFLUENT	FINAL EFFLUENT
CONVENTIONALS	COD	MG/L	1	323	123	120
	BOD	MG/L	1	117	34	41
	TOTAL SUSP. SOLIDS	MG/L	L 1	28	22	19
	OIL & GREASE	MG/L	7	93	11	10
	PH	UNIT	8	9	8	8
NON-CONVENTIONALS	AMMONIA NITROGEN	MG/L	L 1	38	6	10
	TOC	MG/L	8	71	41	38
	SULFIDE	UG/L	100	1367	67	467
VOLATILES	BENZENE	UG/L	N-D	417	N-D	N-D
	1,2-DICHLOROETHANE	UG/L	N-D	16	N-D	N-D
	ETHYLBENZENE	UG/L	N-D	38	N-D	N-D
	METHYLENE CHLORIDE	UG/L	85	3	7	20
BASE-NEUTRALS	NAPHTHALENE	UG/L	N-D	950	N-D	N-D
	BIS(2-ETHYLHEXYL) PHTHALATE	UG/L	150	290	900	155
	PHENANTHRENE	UG/L	N-D	190	N-D	N-D
METALS	ANTIMONY	UG/L	L 1	L 1	1	3
	ARSENIC	UG/L	L 4	8	6	5
	CADMIUM	UG/L	L 20	L 20	7	L 20
	CHROMIUM	UG/L	L 1	718	547	99
	COPPER	UG/L	11	179	118	26
	CYANIDE	UG/L	L 20	323	105	50
	LEAD	UG/L	15	75	83	48
	MERCURY	UG/L	2	10	3	2
	NICKEL	UG/L	L 1	L 50	10	5
	SELENIUM	UG/L	3	11	8	15
	THALLIUM	UG/L	L 3	L 1	L 1	N-D
	ZINC	UG/L	263	931	1142	632
NON-CONV. METALS	HEX-CHROMIUM	UG/L	L 20	17	L 20	L 20
MISC.	PHENOLICS (4AAPD)	UG/L	5	4550	7	3

POLLUTANTS NOT LISTED WERE NEVER DETECTED
L-LESS THAN; N-D NOT DETECTED; E-ESTIMATED OR VALUE NOT QUANTIFIED OR CONFIRMED; G-GREATER THAN;

TABLE V-6

SUMMARY OF ANALYTICAL DATA
PETROLEUM REFINING INDUSTRY
SCREENING SAMPLING PROGRAM

FACILITY 59

FRACTION	PARAMETER	UNITS		INTAKE (WELLS)		DAF UNIT EFFLUENT		FINAL EFFLUENT
CONVENTIONALS	COD	MG/L		9		630		660
	BOD	MG/L		6		84		100
	TOTAL SUSP. SOLIDS	MG/L		24		43		61
	PH	UNIT		7		9		8
NON-CONVENTIONALS	AMMONIA NITROGEN	MG/L		1		35		39
	TOC	MG/L		8		183		220
	SULFIDE	UG/L	L	1		16000		1200
VOLATILES	BENZENE	UG/L		N-D	G	100		N-D
	ETHYLBENZENE	UG/L		N-D	G	100		N-D
	TOLUENE	UG/L		N-D	G	100		N-D
BASE-NEUTRALS	FLUORANTHENE	UG/L		N-D		3		N-D
	NAPHTHALENE	UG/L		2		190		N-D
	BENZO (A)PYRENE	UG/L		N-D		N-D		3
	CHRYSENE	UG/L		N-D	L	1		1
	PHENANTHRENE	UG/L		N-D		140		N-D
	PYRENE	UG/L		N-D		11		7
PESTICIDES	PCB-1242	UG/L		N-D		1		N-D
METALS	CHROMIUM	UG/L	L	240		726		1069
	COPPER	UG/L	L	40		6	L	5
	CYANIDE	UG/L	L	20		50		20
	MERCURY	UG/L	L	1	L	1	L	1
	SILVER	UG/L	L	250	L	250		3
	ZINC	UG/L		7		275		433
NON-CONV. METALS	HEX-CHROMIUM	UG/L	L	20	L	20		10
MISC.	PHENOLICS (4AAPD)	UG/L		230		5600		NOT RUN

POLLUTANTS NOT LISTED WERE NEVER DETECTED
L-LESS THAN; N-D NOT DETECTED; E-ESTIMATED OR VALUE NOT QUANTIFIED OR CONFIRMED; G-GREATER THAN;

TABLE V-7

SUMMARY OF ANALYTICAL DATA
PETROLEUM REFINING INDUSTRY
SCREENING SAMPLING PROGRAM

FACILITY 64

FRACTION	PARAMETER	UNITS	INTAKE	SEPARATOR EFFLUENT	FINAL EFFLUENT
CONVENTIONALS	COD	MG/L	47	157	59
	BOD	MG/L	3	49	5
	TOTAL SUSP. SOLIDS	MG/L	20	15	14
	PH	UNIT	8	7	8
NON-CONVENTIONALS	AMMONIA NITROGEN	MG/L	6	13	20
	TOC	MG/L	15	43	10
	SULFIDE	UG/L	L 1	1600	467
VOLATILES	BENZENE	UG/L	N-D	G 100	N-D
	ETHYLBENZENE	UG/L	N-D	G 100	N-D
	METHYLENE CHLORIDE	UG/L	50	10	10
	TETRACHLOROETHYLENE	UG/L	50	N-D	N-D
	TOLUENE	UG/L	N-D	G 100	N-D
	TRICHLOROETHYLENE	UG/L	20	N-D	N-D
ACID EXTRACT	2,4-DIMETHYLPHENOL	UG/L	N-D	G 100	N-D
	PHENOL	UG/L	N-D	G 100	N-D
BASE-NEUTRALS	ACENAPHTHENE	UG/L	2	150	N-D
	NAPHTHALENE	UG/L	N-D	106	N-D
	DI-N-BUTYL PHTHALATE	UG/L	L 1	N-D	N-D
METALS	CADMIUM	UG/L	L 1	L 20	L 20
	CHROMIUM	UG/L	39	71	43
	COPPER	UG/L	9	L 5	L 5
	CYANIDE	UG/L	10	L 30	L 30
	LEAD	UG/L	5	L 60	L 60
	MERCURY	UG/L	N-D	N-D	L 1
	NICKEL	UG/L	10	6	4
	SELENIUM	UG/L	L 10	L 10	12
	ZINC	UG/L	122	25	52
MISC.	PHENOLICS (4AAPO)	UG/L	5	9067	8

POLLUTANTS NOT LISTED WERE NEVER DETECTED
L-LESS THAN; N-D NOT DETECTED; E-ESTIMATED OR VALUE NOT QUANTIFIED OR CONFIRMED; G-GREATER THAN;

TABLE V-8

SUMMARY OF ANALYTICAL DATA
PETROLEUM REFINING INDUSTRY
SCREENING SAMPLING PROGRAM

FACILITY 80

FRACTION	PARAMETER	UNITS	INTAKE	COMBINED BIO-TREATMENT INFLUENT	FINAL EFFLUENT
CONVENTIONALS	COD	MG/L	343	287	263
	BOD	MG/L	43	G 73	23
	TOTAL SUSP. SOLIDS	MG/L	59	73	102
	PH	UNIT	8	7	9
NON-CONVENTIONALS	AMMONIA NITROGEN	MG/L	44	11	4
	TOC	MG/L	101	78	89
	SULFIDE	UG/L	1067	500	1000
VOLATILES	CARBON TETRACHLORIDE	UG/L	G 50	N-D	N-D
	1,1,1-TRICHLOROETHANE	UG/L	G 50	N-D	N-D
	METHYLENE CHLORIDE	UG/L	L 10	70	L 10
BASE-NEUTRALS	FLUORANTHENE	UG/L	29	N-D	N-D
	BENZO (A)PYRENE	UG/L	33	10	1
	CHRYSENE	UG/L	49	7	1
	PHENANTHRENE	UG/L	160	2	N-D
	PYRENE	UG/L	140	10	N-D
PESTICIDES	CHLORDANE	UG/L	3	N-D	N-D
	BETA-BHC	UG/L	N-D	1	N-D
	PCB-1221	UG/L	N-D	L 1	N-D
METALS	ARSENIC	UG/L	27	41	31
	CHROMIUM	UG/L	38	58	37
	COPPER	UG/L	157	409	124
	CYANIDE	UG/L	L 30	727	70
	MERCURY	UG/L	1	L 1	L 1
	NICKEL	UG/L	35	93	67
	SELENIUM	UG/L	12	L 10	L 10
	ZINC	UG/L	76	339	124
NON-CONV. METALS	HEX-CHROMIUM	UG/L	7	183	10
MISC.	PHENOLICS (4AAPD)	UG/L	210	45	24

POLLUTANTS NOT LISTED WERE NEVER DETECTED
L-LESS THAN; N-D NOT DETECTED; E-ESTIMATED OR VALUE NOT QUANTIFIED OR CONFIRMED; G-GREATER THAN;

TABLE V-9

SUMMARY OF ANALYTICAL DATA
PETROLEUM REFINING INDUSTRY
SCREENING SAMPLING PROGRAM

FACILITY 84

FRACTION	PARAMETER	UNITS	INTAKE	SEPARATOR EFFLUENT	DAF UNIT EFFLUENT	FINAL EFFLUENT
CONVENTIONALS	COD	MG/L	24	840	987	210
	BOD	MG/L	1	260	253	7
	TOTAL SUSP. SOLIDS	MG/L	11	139	131	59
	OIL & GREASE	MG/L	13	99	220	14
	PH	UNIT	8	10	10	8
NON-CONVENTIONALS	AMMONIA NITROGEN	MG/L	L 1	14	12	14
	TOC	MG/L	12	230	283	60
	SULFIDE	UG/L	300	27333	25333	1967
VOLATILES	BENZENE	UG/L	L 1	409	2005	L 1
	METHYLENE CHLORIDE	UG/L	22	293	563	12
	TOLUENE	UG/L	L 1	96	76405	L 1
ACID EXTRACT	PHENOL	UG/L	10	4900	2400	1
BASE-NEUTRALS	FLUORANTHENE	UG/L	N-D	40	N-D	N-D
	NAPHTHALENE	UG/L	N-D	1100	700	N-D
	BIS(2-ETHYLHEXYL) PHTHALATE	UG/L	1100	700	1100	850
	DIETHYL PHTHALATE	UG/L	N-D	N-D	N-D	N-D
	CHRYSENE	UG/L	N-D	40	N-D	N-D
	PHENANTHRENE	UG/L	N-D	1100	600	1
PESTICIDES	ALPHA-ENDOSULFAN	UG/L	N-D	N-D	L 1	N-D
	PCB-1242	UG/L	N-D	1	1	N-D
	PCB-1232	UG/L	N-D	N-D	4	N-D
	PCB-1016	UG/L	N-D	2	8	N-D
METALS	ANTIMONY	UG/L	L 1	L 1	1	L 1
	ARSENIC	UG/L	5	5	L 4	5
	CADMIUM	UG/L	L 20	L 20	5	L 20
	CHROMIUM	UG/L	L 1	723	570	50
	COPPER	UG/L	1	19	2	1
	CYANIDE	UG/L	L 20	1125	1758	144
	LEAD	UG/L	36	245	204	40
	MERCURY	UG/L	1	1	1	1
	NICKEL	UG/L	10	36	21	24
	SELENIUM	UG/L	3	8	9	13
	THALLIUM	UG/L	L 2	L 2	L 2	3
	ZINC	UG/L	27	106	83	45
NON-CONV. METALS	HEX-CHROMIUM	UG/L	L 20	13	7	L 20
MISC.	PHENOLICS (4AAPO)	UG/L	6	23750	23333	33

POLLUTANTS NOT LISTED WERE NEVER DETECTED.
L-LESS THAN; N-D NOT DETECTED; E-ESTIMATED OR VALUE NOT QUANTIFIED OR CONFIRMED; G-GREATER THAN;

TABLE V-10

SUMMARY OF ANALYTICAL DATA
PETROLEUM REFINING INDUSTRY
SCREENING SAMPLING PROGRAM

FACILITY 126

FRACTION	PARAMETER	UNITS	INTAKE (RIVER)	SEPARATOR EFFLUENT	FINAL EFFLUENT
CONVENTIONALS	COD	MG/L	18	190	41
	BOD	MG/L	1	37	1
	TOTAL SUSP. SOLIDS	MG/L	98	102	9
	OIL & GREASE	MG/L	17	52	18
	PH	UNIT	8	8	8
NON-CONVENTIONALS	AMMONIA NITROGEN	MG/L	L 1	7	5
	TOC	MG/L	12	54	20
	SULFIDE	UG/L	133	3100	167
VOLATILES	BENZENE	UG/L	N-D	N-D	12
	CHLOROFORM	UG/L	L 10	55	66
	METHYLENE CHLORIDE	UG/L	N-D	N-D	70
ACID EXTRACT	2,4-DICHLOROPHENOL	UG/L	N-D	N-D	10
	2,4-DIMETHYLPHENOL	UG/L	N-D	175	N-D
	PHENOL	UG/L	N-D	440	N-D
PESTICIDES	4,4'-DDE	UG/L	N-D	7	N-D
METALS	CADMIUM	UG/L	2	L 2	4
	CHROMIUM	UG/L	12	9	10
	COPPER	UG/L	5	23	7
	CYANIDE	UG/L	L 20	103	17
	LEAD	UG/L	L 20	L 20	28
	SELENIUM	UG/L	L 20	L 20	20
	ZINC	UG/L	3	20	17
NON-CONV. METALS	HEX-CHROMIUM	UG/L	13	20	L 20
MISC.	PHENOLICS (4AAPD)	UG/L	4	2133	7

POLLUTANTS NOT LISTED WERE NEVER DETECTED
L-LESS THAN; N-D NOT DETECTED; E-ESTIMATED OR VALUE NOT QUANTIFIED OR CONFIRMED; G-GREATER THAN;

TABLE V-11

SUMMARY OF ANALYTICAL DATA
PETROLEUM REFINING INDUSTRY
SCREENING SAMPLING PROGRAM

FACILITY 153

FRACTION	PARAMETER	UNITS		INTAKE (CITY)		SEPARATOR EFFLUENT		FINAL EFFLUENT
CONVENTIONALS	COD	MG/L		5		257		79
	BOD	MG/L	L	3		66	L	12
	TOTAL SUSP. SOLIDS	MG/L		1		39		8
	OIL & GREASE	MG/L		4		32		6
	PH	UNIT		8		8		7
NON-CONVENTIONALS	AMMONIA NITROGEN	MG/L	L	1		4	L	1
	TOC	MG/L		5		81		31
	SULFIDE	UG/L		450		550		550
VOLATILES	BENZENE	UG/L		NOT RUN		2434		2
	ETHYLBENZENE	UG/L		NOT RUN		812		N-D
	METHYLENE CHLORIDE	UG/L		NOT RUN		19		74
	TOLUENE	UG/L		NOT RUN		11767	L	1
ACID EXTRACT	PHENOL	UG/L		N-D		390		N-D
BASE-NEUTRALS	NAPHTHALENE	UG/L		N-D		290		N-D
	BIS(2-ETHYLHEXYL) PHTHALATE	UG/L		950		300		300
	DI-N-BUTYL PHTHALATE	UG/L		30		N-D		10
METALS	ARSENIC	UG/L	L	4		5	L	4
	CHROMIUM	UG/L	L	1		78	L	1
	COPPER	UG/L		10		127		45
	CYANIDE	UG/L	L	5		8	L	5
	LEAD	UG/L		32		52		53
	MERCURY	UG/L		1		1		1
	NICKEL	UG/L	L	50		2	L	50
	SELENIUM	UG/L		2		3		21
	ZINC	UG/L		202		376		550
MISC.	PHENOLICS (4AAPD)	UG/L		1		5240		15

POLLUTANTS NOT LISTED WERE NEVER DETECTED
L-LESS THAN; N-D NOT DETECTED; E-ESTIMATED OR VALUE NOT QUANTIFIED OR CONFIRMED; G-GREATER THAN;

TABLE V- 12

SUMMARY OF ANALYTICAL DATA
PETROLEUM REFINING INDUSTRY
SCREENING SAMPLING PROGRAM

FACILITY 157
PART 1

FRACTION	PARAMETER	UNITS	INTAKE	SEPARATOR EFFLUENT (LUBE OIL)	SEPARATOR EFFLUENT (LIGHT OIL)	SEPARATOR EFFLUENT (THERMAL)
CONVENTIONALS	COD	MG/L	25	177	553	187
	BOD	MG/L	1	59	G 84	29
	TOTAL SUSP. SOLIDS	MG/L	5	53	123	45
	OIL & GREASE	MG/L	13	77	158	34
	PH	UNIT	8	8	8	7
NON-CONVENTIONALS	AMMONIA NITROGEN	MG/L	1	2	10	5
	TOC	MG/L	14	51	162	53
	SULFIDE	UG/L	100	1433	10500	2867
ACID EXTRACT	PHENOL	UG/L	N-D	420	160	1
BASE-NEUTRALS	FLUORANTHENE	UG/L	N-D	30	N-D	N-D
	NAPHTHALENE	UG/L	N-D	N-D	350	1
	BIS(2-ETHYLHEXYL) PHTHALATE	UG/L	110	180	300	50
	CHRYSENE	UG/L	N-D	30	30	50
	PHENANTHRENE	UG/L	N-D	30	90	1
PESTICIDES	PCB-1242	UG/L	N-D	N-D	1	1
	PCB-1232	UG/L	N-D	N-D	1	1
	PCB-1016	UG/L	N-D	N-D	L 1	1
METALS	ARSENIC	UG/L	3	3	5	3
	CHROMIUM	UG/L	L 1	136	651	724
	COPPER	UG/L	4	286	59	15
	CYANIDE	UG/L	7	10	10	10
	LEAD	UG/L	L 1	192	862	39
	MERCURY	UG/L	2	1	2	1
	NICKEL	UG/L	L 1	154	26	36
	SELENIUM	UG/L	3	7	13	17
	SILVER	UG/L	L 25	L 25	L 25	L N-D
	THALLIUM	UG/L	L 2	L 2	2	L 2
	ZINC	UG/L	61	306	872	229
NON-CONV. METALS	HEX-CHROMIUM	UG/L	7	17	20	27
MISC.	PHENOLICS (4AAPO)	UG/L	11	733	1833	690

POLLUTANTS NOT LISTED WERE NEVER DETECTED
L-LESS THAN; N-D NOT DETECTED; E-ESTIMATED OR VALUE NOT QUANTIFIED OR CONFIRMED; G-GREATER THAN;

TABLE V-13

SUMMARY OF ANALYTICAL DATA
PETROLEUM REFINING INDUSTRY
SCREENING SAMPLING PROGRAM

FACILITY 157
PART 2

FRACTION	PARAMETER	UNITS		SEPARATOR EFFLUENT (OTHER)		SEPARATOR EFFLUENT (OTHER-2)		BIO-TREATMENT EFFLUENT		FINAL EFFLUENT
CONVENTIONALS	COD	MG/L		337		83		553		89
	BOD	MG/L	G	73		12	G	88		6
	TOTAL SUSP. SOLIDS	MG/L		52		30		19		12
	OIL & GREASE	MG/L		83		14		13		14
	PH	UNIT		8		8		8		7
NON-CONVENTIONALS	AMMONIA NITROGEN	MG/L		6		1		22		6
	TOC	MG/L		74		25		90		31
	SULFIDE	UG/L		7000		4333		22167		700
ACID EXTRACT	2,4-DIMETHYLPHENOL	UG/L		650		N-D		750		N-D
	PENTACHLOROPHENOL	UG/L		850		N-D		N-D		N-D
	PHENOL	UG/L		16000		N-D	G	12000		N-D
BASE-NEUTRALS	ACENAPHTHENE	UG/L		50		N-D		N-D		N-D
	FLUORANTHENE	UG/L		20		N-D		N-D		N-D
	BIS(2-ETHYLHEXYL) PHTHALATE	UG/L		600		N-D		210		190
	DIETHYL PHTHALATE	UG/L		N-D		N-D		N-D		30
	DIMETHYL PHTHALATE	UG/L		N-D		N-D		N-D		3
	CHRYSENE	UG/L		40		N-D		N-D		N-D
	FLUORENE	UG/L		80		N-D		N-D		N-D
	PHENANTHRENE	UG/L		230		N-D		N-D		N-D
PESTICIDES	PCB-1242	UG/L		N-D		N-D	L	[illegible]		N-D
METALS	ANTIMONY	UG/L		1	L	1	L	1	L	11
	ARSENIC	UG/L		3		9	L	2	L	4
	BERYLLIUM	UG/L	L	2	L	1	L	2	L	2
	CADMIUM	UG/L	L	20		3	L	20	L	20
	CHROMIUM	UG/L		1451		2548		9		79
	COPPER	UG/L		38		75		13		9
	CYANIDE	UG/L		57		20		273		78
	LEAD	UG/L		32		53		15		18
	MERCURY	UG/L		2		1		3		2
	NICKEL	UG/L	L	50		54	L	50		19
	SELENIUM	UG/L		16		20		18		19
	SILVER	UG/L	L	1		6	L	25	L	25
	THALLIUM	UG/L	L	2		3	L	2	L	2
	ZINC	UG/L		421		575		81		70
NON-CONV. METALS	HEX-CHROMIUM	UG/L		17		120		87	L	20
MISC.	PHENOLICS (4AAPD)	UG/L		4333		251		104333		11

POLLUTANTS NOT LISTED WERE NEVER DETECTED
L-LESS THAN; N-D NOT DETECTED; E-ESTIMATED OR VALUE NOT QUANTIFIED OR CONFIRMED; G-GREATER THAN;

TABLE V-14

SUMMARY OF ANALYTICAL DATA
PETROLEUM REFINING INDUSTRY
SCREENING SAMPLING PROGRAM

FACILITY 167

FRACTION	PARAMETER	UNITS		INTAKE (RIVER)	DAF UNIT EFFLUENT		FINAL EFFLUENT
CONVENTIONALS	COD	MG/L		25	690		122
	BOD	MG/L		3	118		7
	TOTAL SUSP. SOLIDS	MG/L		12	283		23
	OIL & GREASE	MG/L		10	293		19
	PH	UNIT		8	8		8
NON-CONVENTIONALS	AMMONIA NITROGEN	MG/L	L	1	7		3
	TOC	MG/L		11	237		41
	SULFIDE	UG/L		367	1000		367
VOLATILES	BENZENE	UG/L		N-D	20		N-D
	CHLOROFORM	UG/L	L	10	100	L	10
	METHYLENE CHLORIDE	UG/L		N-D	1100	L	10
ACID EXTRACT	2-CHLOROPHENOL	UG/L		N-D	315		N-D
	2,4-DIMETHYLPHENOL	UG/L		N-D	1150		N-D
	4-NITROPHENOL	UG/L		N-D	5800		N-D
	2,4-DINITROPHENOL	UG/L		N-D	11000		N-D
	PHENOL	UG/L		N-D	105		N-D
METALS	CADMIUM	UG/L		1	1	L	1
	CHROMIUM	UG/L		13	1320		87
	COPPER	UG/L		9	276		28
	LEAD	UG/L		46	96	L	20
	NICKEL	UG/L	L	15	15	L	15
	ZINC	UG/L		89	1680		278
NON-CONV. METALS	HEX-CHROMIUM	UG/L	L	20	20	L	20
MISC.	PHENOLICS (4AAPD)	UG/L	L	10	700		29

POLLUTANTS NOT LISTED WERE NEVER DETECTED
L-LESS THAN; N-D NOT DETECTED; E-ESTIMATED OR VALUE NOT QUANTIFIED OR CONFIRMED; G-GREATER THAN;

TABLE V-15

SUMMARY OF ANALYTICAL DATA
PETROLEUM REFINING INDUSTRY
SCREENING SAMPLING PROGRAM

FACILITY 169

FRACTION	PARAMETER	UNITS	INTAKE	SEPARATOR EFFLUENT	SEPARATOR EFFLUENT (OTHER)	FINAL EFFLUENT
CONVENTIONALS	COD	MG/L	33	423	193	63
	BOD	MG/L	1	131	37	6
	TOTAL SUSP. SOLIDS	MG/L	210	123	42	28
	PH	UNIT	7	8	7	7
NON-CONVENTIONALS	AMMONIA NITROGEN	MG/L	L 1	12	11	2
	TOC	MG/L	10	120	50	16
	SULFIDE	UG/L	700	1200	1133	533
VOLATILES	BENZENE	UG/L	N-D	G 100	G 100	N-D
	CHLOROFORM	UG/L	N-D	10	10	N-D
	ETHYLBENZENE	UG/L	N-D	G 100	G 100	N-D
	METHYLENE CHLORIDE	UG/L	40	G 100	50	60
	TOLUENE	UG/L	N-D	G 100	G 100	N-D
ACID EXTRACT	2,4-DIMETHYLPHENOL	UG/L	N-D	G 100	G 100	N-D
	PHENOL	UG/L	N-D	G 100	G 100	N-D
BASE-NEUTRALS	ACENAPHTHENE	UG/L	29	N-D	3000	6
	FLUORANTHENE	UG/L	L 1	N-D	9	L 1
	NAPHTHALENE	UG/L	1	500	280	L 1
	CHRYSENE	UG/L	N-D	20	2	L 1
	ACENAPHTHYLENE	UG/L	L 1	N-D	N-D	N-D
	FLUORENE	UG/L	1	270	300	N-D
	PHENANTHRENE	UG/L	1	230	N-D	N-D
	PYRENE	UG/L	L 1	N-D	7	L 1
PESTICIDES	PCB-1242	UG/L	L 1	5	N-D	N-D
METALS	CHROMIUM	UG/L	6	258	841	165
	COPPER	UG/L	8	110	44	27
	CYANIDE	UG/L	L 60	377	150	80
	LEAD	UG/L	161	9	3	L 60
	MERCURY	UG/L	L 1	1	L 1	L 1
	NICKEL	UG/L	4	14	3	3
	ZINC	UG/L	211	360	323	161
NON-CONV. METALS	HEX-CHROMIUM	UG/L	100	23	17	40
MISC.	PHENOLICS (4AAPO)	UG/L	L 10	54667	11000	3

POLLUTANTS NOT LISTED WERE NEVER DETECTED
L-LESS THAN; N-D NOT DETECTED; E-ESTIMATED OR VALUE NOT QUANTIFIED OR CONFIRMED; G-GREATER THAN;

TABLE V-16

SUMMARY OF ANALYTICAL DATA
PETROLEUM REFINING INDUSTRY
SCREENING SAMPLING PROGRAM

FACILITY 186

FRACTION	PARAMETER	UNITS		INTAKE (CITY)		DAF UNIT EFFLUENT		FINAL EFFLUENT
CONVENTIONALS	COD	MG/L		9		233		84
	BOD	MG/L	L	6		40	L	12
	TOTAL SUSP. SOLIDS	MG/L	L	1		11		11
	OIL & GREASE	MG/L		8		17		13
	PH	UNIT		8		8		8
NON-CONVENTIONALS	AMMONIA NITROGEN	MG/L	L	1		12	L	1
	TOC	MG/L		7		67		16
	SULFIDE	UG/L		233		500		367
VOLATILES	BENZENE	UG/L		14		12		11
	CHLOROFORM	UG/L		44		55	L	10
	METHYLENE CHLORIDE	UG/L		91		180	L	10
ACID EXTRACT	PARACHLOROMETA CRESOL	UG/L		N-D		N-D		10
	2,4-DIMETHYLPHENOL	UG/L		N-D		18300		N-D
	4-NITROPHENOL	UG/L		N-D		1400		N-D
	2,4-DINITROPHENOL	UG/L		N-D		2660		N-D
	PHENOL	UG/L	L	10		33500	L	10
METALS	BERYLLIUM	UG/L	L	3		2		1
	CADMIUM	UG/L	L	2	L	2		1
	CHROMIUM	UG/L		16		113		81
	COPPER	UG/L		176		9		14
	CYANIDE	UG/L	L	20		20	L	20
	LEAD	UG/L		65	L	20		16
	NICKEL	UG/L		2	L	15		6
	SILVER	UG/L	L	5	L	5		2
	ZINC	UG/L		113		126		116
NON-CONV. METALS	HEX-CHROMIUM	UG/L	L	20		250	L	20
MISC.	PHENOLICS (4AAPO)	UG/L	L	10		4400	L	10

POLLUTANTS NOT LISTED WERE NEVER DETECTED
L-LESS THAN; N-D NOT DETECTED; E-ESTIMATED OR VALUE NOT QUANTIFIED OR CONFIRMED; G-GREATER THAN;

TABLE V-17

SUMMARY OF ANALYTICAL DATA
PETROLEUM REFINING INDUSTRY
SCREENING SAMPLING PROGRAM

FACILITY 194

FRACTION	PARAMETER	UNITS	INTAKE (RIVER)	SEPARATOR EFFLUENT	UNTREATED WASTEWATER (OTHER)	FINAL EFFLUENT
CONVENTIONALS	COD	MG/L	28	410	463	133
	BOD	MG/L	L 5	101	83	9
	TOTAL SUSP. SOLIDS	MG/L	22	85	35	45
	PH	UNIT	8	8	7	8
NON-CONVENTIONALS	AMMONIA NITROGEN	MG/L	L 1	13	1	5
	TOC	MG/L	11	103	134	34
	SULFIDE	UG/L	733	6733	833	800
VOLATILES	BENZENE	UG/L	N-D	G 100	90	6
	CHLOROFORM	UG/L	N-D	15	10	N-D
	ETHYLBENZENE	UG/L	N-D	G 100	20	N-D
	METHYLENE CHLORIDE	UG/L	G 100	G 100	G 100	G 100
	TOLUENE	UG/L	N-D	G 100	G 100	35
ACID EXTRACT	PARACHLOROMETA CRESOL	UG/L	N-D	N-D	10	N-D
	2,4-DIMETHYLPHENOL	UG/L	N-D	71	G 100	N-D
	PHENOL	UG/L	N-D	G 100	40	N-D
BASE-NEUTRALS	ACENAPHTHENE	UG/L	N-D	522	N-D	N-D
	FLUORANTHENE	UG/L	N-D	8	N-D	N-D
	NAPHTHALENE	UG/L	N-D	302	27	N-D
	CHRYSENE	UG/L	N-D	6	L 1	N-D
	ACENAPHTHYLENE	UG/L	N-D	87	N-D	N-D
	PHENANTHRENE	UG/L	N-D	140	1	N-D
	PYRENE	UG/L	N-D	16	1	N-D
PESTICIDES	HEPTACHLOR EPOXIDE	UG/L	N-D	N-D	5	N-D
	PCB-1221	UG/L	N-D	L 1	N-D	N-D
	PCB-1232	UG/L	N-D	1	L 1	N-D
	PCB-1016	UG/L	N-D	2	1	N-D
METALS	CHROMIUM	UG/L	601	1332	667	109
	COPPER	UG/L	L 40	16	6	2
	CYANIDE	UG/L	L 60	13	L 60	L 60
	LEAD	UG/L	L 600	4	L 60	L 60
	MERCURY	UG/L	L 1	L 1	L 1	L 1
	NICKEL	UG/L	158	3	L 50	L 50
	ZINC	UG/L	28	597	4980	64
NON-CONV. METALS	HEX-CHROMIUM	UG/L	53	L 20	L 20	L 20
MISC.	PHENOLICS (4AAPO)	UG/L	L 11	5800	49	L 15

POLLUTANTS NOT LISTED WERE NEVER DETECTED
L-LESS THAN; N-D NOT DETECTED; E-ESTIMATED OR VALUE NOT QUANTIFIED OR CONFIRMED; G-GREATER THAN;

TABLE V- 18

SUMMARY OF ANALYTICAL DATA
PETROLEUM REFINING INDUSTRY
SCREENING SAMPLING PROGRAM

FACILITY 205

FRACTION	PARAMETER	UNITS		INTAKE (WELLS)		DAF UNIT EFFLUENT		FINAL EFFLUENT
CONVENTIONALS	COD	MG/L		16		423		137
	BOD	MG/L	L	5		94		20
	TOTAL SUSP. SOLIDS	MG/L		11		32		25
	PH	UNIT		7		9		8
NON-CONVENTIONALS	AMMONIA NITROGEN	MG/L	L	1		10		3
	TOC	MG/L		19		137		47
	SULFIDE	UG/L		200		3633		500
VOLATILES	CHLOROFORM	UG/L		55		13		32
	METHYLENE CHLORIDE	UG/L		130		N-D		44
	TOLUENE	UG/L	L	10		16		N-D
ACID EXTRACT	2,4-DIMETHYLPHENOL	UG/L		N-D		2000		N-D
	PHENOL	UG/L		N-D		1900		N-D
BASE-NEUTRALS	ACENAPHTHENE	UG/L		N-D		390		N-D
	ISOPHORONE	UG/L		N-D		2500		N-D
	NAPHTHALENE	UG/L		N-D		3750		N-D
	ACENAPHTHYLENE	UG/L		N-D		530		N-D
	ANTHRACENE	UG/L		N-D		1750		N-D
	FLUORENE	UG/L		N-D		495		N-D
	PHENANTHRENE	UG/L		N-D		1750		N-D
METALS	CHROMIUM	UG/L		2		248		62
	COPPER	UG/L	L	6		20	L	6
	CYANIDE	UG/L	L	20		167	L	30
	LEAD	UG/L	L	20		5	L	20
	ZINC	UG/L	L	60		47	L	60
NON-CONV. METALS	HEX-CHROMIUM	UG/L		13	L	20		7
MISC.	PHENOLICS (4AAPD)	UG/L	L	10		10667		46

POLLUTANTS NOT LISTED WERE NEVER DETECTED
L-LESS THAN; N-D NOT DETECTED; E-ESTIMATED OR VALUE NOT QUANTIFIED OR CONFIRMED; G-GREATER THAN;

TABLE V-19

SUMMARY OF ANALYTICAL DATA
PETROLEUM REFINING INDUSTRY
SCREENING SAMPLING PROGRAM

FACILITY 235

FRACTION	PARAMETER	UNITS		INTAKE (CITY)	SEPARATOR EFFLUENT		FINAL EFFLUENT
CONVENTIONALS	COD	MG/L		3	537		51
	BOD	MG/L	L	5	212	L	5
	TOTAL SUSP. SOLIDS	MG/L	L	1	63		7
	PH	UNIT		7	10		8
NON-CONVENTIONALS	AMMONIA NITROGEN	MG/L	L	1	15		2
	TOC	MG/L		6	150		24
	SULFIDE	UG/L	L	1	24333		300
VOLATILES	BENZENE	UG/L	L	10	1100	L	10
	CHLOROFORM	UG/L	L	10	100	L	10
	1,2-TRANS-DICHLOROETHYLENE	UG/L		11	N-D		N-D
	ETHYLBENZENE	UG/L		N-D	28		N-D
	METHYLENE CHLORIDE	UG/L		N-D	1600		41
	TOLUENE	UG/L	L	10	655		N-D
ACID EXTRACT	2-NITROPHENOL	UG/L	L	10	1350		N-D
	4-NITROPHENOL	UG/L	L	10	20		N-D
	2,4-DINITROPHENOL	UG/L		N-D	110		N-D
	4,6-DINITRO-O-CRESOL	UG/L		N-D	60		N-D
BASE-NEUTRALS	ACENAPHTHENE	UG/L		N-D	315		N-D
	ISOPHORONE	UG/L		N-D	3550		N-D
	NAPHTHALENE	UG/L		N-D	3200		N-D
	ACENAPHTHYLENE	UG/L		N-D	665		N-D
	ANTHRACENE	UG/L		N-D	660		N-D
	PHENANTHRENE	UG/L		N-D	660		N-D
PESTICIDES	ALDRIN	UG/L		N-D	12		N-D
	BETA-ENDOSULFAN	UG/L		N-D	13		N-D
	DELTA-BHC	UG/L		N-D	12		N-D
METALS	ANTIMONY	UG/L	L	25	360		370
	CHROMIUM	UG/L		8	464		8
	CYANIDE	UG/L	L	30	63	L	30
	ZINC	UG/L		12	11		9
NON-CONV. METALS	HEX-CHROMIUM	UG/L	L	20	67	L	20
MISC.	PHENOLICS (4AAPO)	UG/L	L	10	67500		11

POLLUTANTS NOT LISTED WERE NEVER DETECTED
L-LESS THAN; N-D NOT DETECTED; E-ESTIMATED OR VALUE NOT QUANTIFIED OR CONFIRMED; G-GREATER THAN;

TABLE V- 20

SUMMARY OF ANALYTICAL DATA
PETROLEUM REFINING INDUSTRY
SCREENING SAMPLING PROGRAM

FACILITY 241

FRACTION	PARAMETER	UNITS	INTAKE (WELLS)	SEPARATOR EFFLUENT	FINAL EFFLUENT
CONVENTIONALS	COD	MG/L	11	320	247
	BOD	MG/L	L 3	62	26
	TOTAL SUSP. SOLIDS	MG/L	2	17	29
	OIL & GREASE	MG/L	9	50	42
	PH	UNIT	7	9	9
NON-CONVENTIONALS	AMMONIA NITROGEN	MG/L	L 1	44	48
	TOC	MG/L	9	80	66
	SULFIDE	UG/L	333	5767	600
VOLATILES	BENZENE	UG/L	L 1	894	N-D
	CHLOROFORM	UG/L	N-D	6	N-D
	METHYLENE CHLORIDE	UG/L	6	4	3
	DICHLOROBROMOMETHANE	UG/L	N-D	24	N-D
	TOLUENE	UG/L	N-D	167	N-D
ACID EXTRACT	PHENOL	UG/L	10	60	N-D
BASE-NEUTRALS	BIS(2-ETHYLHEXYL) PHTHALATE	UG/L	1100	320	2000
	DIETHYL PHTHALATE	UG/L	20	N-D	1
METALS	ANTIMONY	UG/L	L 1	L 1	1
	ARSENIC	UG/L	21	438	734
	CADMIUM	UG/L	L 20	L 20	1
	CHROMIUM	UG/L	L 1	L 1	L 1
	COPPER	UG/L	85	98	90
	CYANIDE	UG/L	4	3	65
	LEAD	UG/L	34	22	23
	MERCURY	UG/L	2	1	2
	SELENIUM	UG/L	6	8	16
	ZINC	UG/L	553	550	416
MISC.	PHENOLICS (4AAPO)	UG/L	5	112	16

POLLUTANTS NOT LISTED WERE NEVER DETECTED
L-LESS THAN; N-D NOT DETECTED; E-ESTIMATED OR VALUE NOT QUANTIFIED OR CONFIRMED; G-GREATER THAN;

TABLE V-21

SUMMARY OF ANALYTICAL DATA
PETROLEUM REFINING INDUSTRY
POTW SAMPLING PROGRAM

FACILITY 13

FRACTION	PARAMETER	UNITS		FINAL EFFLUENT-TO POTW
CONVENTIONALS	COD	MG/L		842
	BOD	MG/L		404
	TOTAL SUSP. SOLIDS	MG/L		75
	OIL & GREASE	MG/L		290
	PH	UNIT		11
NON-CONVENTIONALS	AMMONIA NITROGEN	MG/L		25
	SULFIDE	UG/L		50
VOLATILES	BENZENE	UG/L		175
	1,1,1-TRICHLOROETHANE	UG/L		7
	CHLOROFORM	UG/L		5
	ETHYLBENZENE	UG/L		205
	TOLUENE	UG/L		2300
ACID EXTRACT	2,4-DIMETHYLPHENOL	UG/L		2450
	PHENOL	UG/L		1650
BASE-NEUTRALS	ACENAPHTHENE	UG/L		9
	ISOPHORONE	UG/L		6
	NAPHTHALENE	UG/L		92
	DIETHYL PHTHALATE	UG/L		19
	1,2-BENZANTHRACENE	UG/L		6
	CHRYSENE	UG/L		6
	ANTHRACENE	UG/L		33
	FLUORENE	UG/L		7
	PHENANTHRENE	UG/L		33
PESTICIDES	4,4'-DDT	UG/L	L	1
	4,4'-DDE	UG/L	L	1
	ALPHA-BHC	UG/L	L	1
METALS	ARSENIC	UG/L		14
	CHROMIUM	UG/L		1108
	COPPER	UG/L		11
	CYANIDE	UG/L		203
	LEAD	UG/L		26
	MERCURY	UG/L	L	1
	SELENIUM	UG/L		107
	ZINC	UG/L		120
MISC.	PHENOLICS (4AAPD)	UG/L		92150

POLLUTANTS NOT LISTED WERE NEVER DETECTED
L-LESS THAN; N-D NOT DETECTED; E-ESTIMATED OR VALUE NOT QUANTIFIED OR CONFIRMED;

TABLE V-22

SUMMARY OF ANALYTICAL DATA
PETROLEUM REFINING INDUSTRY
POTW SAMPLING PROGRAM

FACILITY 16

FRACTION	PARAMETER	UNITS		FINAL EFFLUENT-TO POTW
CONVENTIONALS	COD	MG/L		484
	BOD	MG/L		120
	TOTAL SUSP. SOLIDS	MG/L		22
	OIL & GREASE	MG/L		37
	PH	UNIT		8
NON-CONVENTIONALS	AMMONIA NITROGEN	MG/L		25
VOLATILES	BENZENE	UG/L		260
	ETHYLBENZENE	UG/L		277
	TOLUENE	UG/L		620
ACID EXTRACT	2,4-DIMETHYLPHENOL	UG/L		318
	PHENOL	UG/L		565
BASE-NEUTRALS	NAPHTHALENE	UG/L		53
PESTICIDES	4,4'-DDT	UG/L		3
	ALPHA-BHC	UG/L	L	1
METALS	ARSENIC	UG/L		23
	CHROMIUM	UG/L		1880
	COPPER	UG/L		14
	CYANIDE	UG/L		67
	LEAD	UG/L		20
	SELENIUM	UG/L		146
	ZINC	UG/L		333
MISC.	PHENOLICS (4AAPD)	UG/L		3700

POLLUTANTS NOT LISTED WERE NEVER DETECTED
L-LESS THAN; N-D NOT DETECTED; E-ESTIMATED OR VALUE NOT QUANTIFIED OR CONFIRMED;

TABLE V- 23

SUMMARY OF ANALYTICAL DATA
PETROLEUM REFINING INDUSTRY
POTW SAMPLING PROGRAM

FACILITY 21

FRACTION	PARAMETER	UNITS		FINAL EFFLUENT-TO POTW
CONVENTIONALS	COD	MG/L		351
	BOD	MG/L		125
	TOTAL SUSP. SOLIDS	MG/L		23
	OIL & GREASE	MG/L		34
	PH	UNIT		9
NON-CONVENTIONALS	AMMONIA NITROGEN	MG/L		4
VOLATILES	BENZENE	UG/L		466
	1,2-DICHLOROETHANE	UG/L		29
	CHLOROFORM	UG/L		19
	ETHYLBENZENE	UG/L		6073
	TOLUENE	UG/L		18500
ACID EXTRACT	2,4-DIMETHYLPHENOL	UG/L		394
	PHENOL	UG/L		133
BASE-NEUTRALS	NAPHTHALENE	UG/L		162
	BUTYL BENZYL PHTHALATE	UG/L		5
	DIETHYL PHTHALATE	UG/L		6
PESTICIDES	ALDRIN	UG/L	L	1
	ALPHA-BHC	UG/L	L	1
METALS	CHROMIUM	UG/L		942
	COPPER	UG/L		15
	CYANIDE	UG/L		20
	LEAD	UG/L		39
	SELENIUM	UG/L		17
	ZINC	UG/L		172
MISC.	PHENOLICS (4AAPO)	UG/L		1467

POLLUTANTS NOT LISTED WERE NEVER DETECTED
L-LESS THAN; N-D NOT DETECTED; E-ESTIMATED OR VALUE NOT QUANTIFIED OR CONFIRMED;

TABLE V-24

SUMMARY OF ANALYTICAL DATA
PETROLEUM REFINING INDUSTRY
POTW SAMPLING PROGRAM

FACILITY 25

FRACTION	PARAMETER	UNITS		FINAL EFFLUENT-TO POTW
CONVENTIONALS	COD	MG/L		700
	BOD	MG/L		328
	TOTAL SUSP. SOLIDS	MG/L		30
	OIL & GREASE	MG/L		48
	PH	UNIT		9
NON-CONVENTIONALS	AMMONIA NITROGEN	MG/L		37
VOLATILES	BENZENE	UG/L		3867
	CHLOROBENZENE	UG/L		16
	CHLOROFORM	UG/L		13
	ETHYLBENZENE	UG/L		6200
	TETRACHLOROETHYLENE	UG/L		9
	TOLUENE	UG/L		10200
ACID EXTRACT	2,4-DIMETHYLPHENOL	UG/L		644
	PENTACHLOROPHENOL	UG/L		415
	PHENOL	UG/L		1450
BASE-NEUTRALS	NAPHTHALENE	UG/L		330
	BUTYL BENZYL PHTHALATE	UG/L		8
	DI-N-BUTYL PHTHALATE	UG/L		20
	DIETHYL PHTHALATE	UG/L		7
	ANTHRACENE	UG/L		47
	FLUORENE	UG/L		32
	PHENANTHRENE	UG/L		47
	PYRENE	UG/L		11
PESTICIDES	BETA-BHC	UG/L	L	1
METALS	ARSENIC	UG/L		15
	CHROMIUM	UG/L		1705
	COPPER	UG/L		23
	CYANIDE	UG/L		2800
	LEAD	UG/L		28
	SELENIUM	UG/L		261
	ZINC	UG/L		148
NON-CONV. METALS	HEX-CHROMIUM	UG/L		320
MISC.	PHENOLICS (4AAPO)	UG/L		103333

POLLUTANTS NOT LISTED WERE NEVER DETECTED
L-LESS THAN; N-D NOT DETECTED; E-ESTIMATED OR VALUE NOT QUANTIFIED OR CONFIRMED;

TABLE V-25

SUMMARY OF ANALYTICAL DATA
PETROLEUM REFINING INDUSTRY
POTW SAMPLING PROGRAM

FACILITY 43

FRACTION	PARAMETER	UNITS	FINAL EFFLUENT TO POTW	DIRECT DISCHARGE
CONVENTIONALS	COD	MG/L	2510	130
	BOD	MG/L	531	38
	TOTAL SUSP. SOLIDS	MG/L	32	25
	OIL & GREASE	MG/L	134	4
	PH	UNIT	8	8
NON-CONVENTIONALS	AMMONIA NITROGEN	MG/L	43	3
VOLATILES	BENZENE	UG/L	24	N-D
	1,2-DICHLOROETHANE	UG/L	N-D	14
	1,1,1-TRICHLOROETHANE	UG/L	8	N-D
	METHYLENE CHLORIDE	UG/L	6	N-D
ACID EXTRACT	2,4-DIMETHYLPHENOL	UG/L	4950	8
	PHENOL	UG/L	7000	N-D
BASE-NEUTRALS	2,4-DINITROTOLUENE	UG/L	N-D	10
	1,2-DIPHENYLHYDRAZINE	UG/L	12	N-D
	N-NITROSODIPHENYLAMINE	UG/L	N-D	21
	DI-N-BUTYL PHTHALATE	UG/L	N-D	7
	DIETHYL PHTHALATE	UG/L	6	N-D
PESTICIDES	ALDRIN	UG/L	N-D	L 1
	4,4'-DDT	UG/L	N-D	L 1
	HEPTACHLOR EPOXIDE	UG/L	N-D	L 1
	ALPHA-BHC	UG/L	L 1	L 1
	BETA-BHC	UG/L	N-D	L 1
METALS	ARSENIC	UG/L	65	N-D
	CHROMIUM	UG/L	69	204
	COPPER	UG/L	47	5
	CYANIDE	UG/L	6667	30
	LEAD	UG/L	N-D	18
	NICKEL	UG/L	14	N-D
	SELENIUM	UG/L	481	N-D
	ZINC	UG/L	47	137
NON-CONV. METALS	HEX-CHROMIUM	UG/L	L 200	30
MISC.	PHENOLICS (4AAPO)	UG/L	140500	103

POLLUTANTS NOT LISTED WERE NEVER DETECTED
L-LESS THAN; N-D NOT DETECTED; E-ESTIMATED OR VALUE NOT QUANTIFIED OR CONFIRMED;

TABLE V-26

SUMMARY OF ANALYTICAL DATA
PETROLEUM REFINING INDUSTRY
POTW SAMPLING PROGRAM

FACILITY 45

FRACTION	PARAMETER	UNITS		FINAL EFFLUENT-TO POTW
CONVENTIONALS	COD	MG/L		429
	BOD	MG/L		153
	TOTAL SUSP. SOLIDS	MG/L		17
	OIL & GREASE	MG/L		15
	PH	UNIT		7
NON-CONVENTIONALS	AMMONIA NITROGEN	MG/L		104
VOLATILES	BENZENE	UG/L		262
	ETHYLBENZENE	UG/L		105
	TOLUENE	UG/L		434
ACID EXTRACT	2,4-DIMETHYLPHENOL	UG/L		1360
	PHENOL	UG/L		2467
BASE-NEUTRALS	ACENAPHTHENE	UG/L		19
	NAPHTHALENE	UG/L		229
	ANTHRACENE	UG/L		58
	PHENANTHRENE	UG/L		58
	PYRENE	UG/L		8
PESTICIDES	ALDRIN	UG/L	L	1
	4,4'-DDT	UG/L	L	1
	ALPHA-BHC	UG/L	L	1
METALS	CHROMIUM	UG/L		640
	COPPER	UG/L		22
	CYANIDE	UG/L		6000
	LEAD	UG/L		17
	MERCURY	UG/L	L	1
	SELENIUM	UG/L		143
	ZINC	UG/L		180
MISC.	PHENOLICS (4AAPD)	UG/L		16367

POLLUTANTS NOT LISTED WERE NEVER DETECTED
L-LESS THAN; N-D NOT DETECTED; E-ESTIMATED OR VALUE NOT QUANTIFIED OR CONFIRMED;

TABLE V-27
DIRECT DISCHARGE
FINAL EFFLUENT PRIORITY POLLUTANTS
SUMMARY OF EPA SCREENING PROGRAM DATA

FRACTION	PAR. NO.	PARAMETER	UNITS	PLANTS SAMPLED	PLANTS DETECTING	TOTAL SAMPLES ANALYZED	TOTAL TIMES DETECTED	PER CENT	AVERAGE	MINIMUM	MAXIMUM
VOLATILES	2	ACROLEIN	UG/L	16	0	16	0				
	3	ACRYLONITRILE	UG/L	16	0	16	0				
	4	BENZENE	UG/L	16	4	16	4	25	2 L	1	12
	6	CARBON TETRACHLORIDE	UG/L	16	0	16	0				
	7	CHLOROBENZENE	UG/L	16	0	16	0				
	10	1,2-DICHLOROETHANE	UG/L	16	0	16	0				
	11	1,1,1-TRICHLOROETHANE	UG/L	16	0	16	0				
	13	1,1-DICHLOROETHANE	UG/L	16	0	16	0				
	14	1,1,2-TRICHLOROETHANE	UG/L	16	0	16	0				
	15	1,1,2,2-TETRACHLOROETHANE	UG/L	16	0	16	0				
	16	CHLOROETHANE	UG/L	16	0	16	0				
	17	BIS(CHLOROMETHYL) ETHER	UG/L	16	0	16	0				
	19	2-CHLOROETHYL VINYL ETHER	UG/L	16	0	16	0				
	23	CHLOROFORM	UG/L	16	2	16	2	13	6 L	5	66
	29	1,1-DICHLOROETHYLENE	UG/L	16	0	16	0				
	30	1,2-TRANS-DICHLOROETHYLENE	UG/L	16	0	16	0				
	32	1,2-DICHLOROPROPANE	UG/L	16	0	16	0				
	33	1,3-DICHLOROPROPYLENE	UG/L	16	0	16	0				
	38	ETHYLBENZENE	UG/L	16	0	16	0				
	44	METHYLENE CHLORIDE	UG/L	16	11	16	11	69	33 L	10	100
	45	METHYL CHLORIDE	UG/L	16	0	16	0				
	46	METHYL BROMIDE	UG/L	16	0	16	0				
	47	BROMOFORM	UG/L	16	0	16	0				
	48	DICHLOROBROMOMETHANE	UG/L	16	0	16	0				
	49	TRICHLOROFLUOROMETHANE	UG/L	16	0	16	0				
	50	DICHLORODIFLUOROMETHANE	UG/L	16	0	16	0				
	51	CHLORODIBROMOMETHANE	UG/L	16	0	16	0				
	85	TETRACHLOROETHYLENE	UG/L	16	0	16	0				
	86	TOLUENE	UG/L	16	1	16	1	6	2 L	1	35
	87	TRICHLOROETHYLENE	UG/L	16	0	16	0				
	88	VINYL CHLORIDE	UG/L	16	0	16	0				
ACID EXTRACT	21	2,4,6-TRICHLOROPHENOL	UG/L	17	0	22	0				
	22	PARACHLOROMETA CRESOL	UG/L	17	1	22	1	5 L	1 L	10	10
	24	2-CHLOROPHENOL	UG/L	17	0	22	0				
	31	2,4-DICHLOROPHENOL	UG/L	17	1	22	1	5 L	1	N-D	10
	34	2,4-DIMETHYLPHENOL	UG/L	17	0	22	0				
	57	2-NITROPHENOL	UG/L	17	0	22	0				
	58	4-NITROPHENOL	UG/L	17	0	22	0				
	59	2,4-DINITROPHENOL	UG/L	17	0	22	0				
	60	4,6-DINITRO-O-CRESOL	UG/L	17	0	22	0				
	64	PENTACHLOROPHENOL	UG/L	17	0	22	0				
	65	PHENOL	UG/L	17	0	22	0				
BASE-NEUTRALS	1	ACENAPHTHENE	UG/L	17	1	22	1	5 L	1	N-D	6
	5	BENZIDINE	UG/L	17	0	22	0				
	8	1,2,4-TRICHLOROBENZENE	UG/L	17	0	22	0				

Note: Laboratory analysis reported as less than a deduction limit is considered not detected (value = 0) for this table.

L-LESS THAN; T-TRACE; N-D NOT DETECTED; G-GREATER THAN;

TABLE V-27
DIRECT DISCHARGE
FINAL EFFLUENT PRIORITY POLLUTANTS
SUMMARY OF EPA SCREENING PROGRAM DATA

FRACTION	PAR. NO.	PARAMETER	UNITS	PLANTS SAMPLED	PLANTS DETECTING	TOTAL SAMPLES ANALYZED	TOTAL TIMES DETECTED	PER-CENT	AVERAGE	MINIMUM	MAXIMUM
BASE-NEUTRALS	9	HEXACHLOROBENZENE	UG/L	17	0	22	0				
	12	HEXACHLOROETHANE	UG/L	17	0	22	0				
	18	BIS(2-CHLOROETHYL) ETHER	UG/L	17	0	22	0				
	20	2-CHLORONAPHTHALENE	UG/L	17	0	22	0				
	25	1,2-DICHLOROBENZENE	UG/L	17	0	22	0				
	26	1,3-DICHLOROBENZENE	UG/L	17	0	22	0				
	27	1,4-DICHLOROBENZENE	UG/L	17	0	22	0				
	28	3,3'-DICHLOROBENZIDINE	UG/L	17	0	22	0				
	35	2,4-DINITROTOLUENE	UG/L	17	0	22	0				
	36	2,6-DINITROTOLUENE	UG/L	17	0	22	0				
	37	1,2-DIPHENYLHYDRAZINE	UG/L	17	0	22	0				
	39	FLUORANTHENE	UG/L	17	0	22	0				
	40	4-CHLOROPHENYL PHENYL ETHER	UG/L	17	0	22	0				
	41	4-BROMOPHENYL PHENYL ETHER	UG/L	17	0	22	0				
	42	BIS(2-CHLOROISOPROPYL) ETHER	UG/L	17	0	22	0				
	43	BIS(2-CHLOROETHYOXY) METHANE	UG/L	17	0	22	0				
	52	HEXACHLOROBUTADIENE	UG/L	17	0	22	0				
	53	HEXACHLOROCYCLOPENTADIENE	UG/L	17	0	22	0				
	54	ISOPHORONE	UG/L	17	0	22	0				
	55	NAPHTHALENE	UG/L	17	1	22	1	5	L 1	N-D	L 1
	56	NITROBENZENE	UG/L	17	0	22	0				
	61	N-NITROSODIMETHYLAMINE	UG/L	17	0	22	0				
	62	N-NITROSODIPHENYLAMINE	UG/L	17	0	22	0				
	63	N-NITROSODI-N-PROPYLAMINE	UG/L	17	0	22	0				
	66	BIS(2-ETHYLHEXYL) PHTHALATE	UG/L	17	5	22	5	23	180	10	2000
	67	BUTYL BENZYL PHTHALATE	UG/L	17	0	22	0				
	68	DI-N-BUTYL PHTHALATE	UG/L	17	2	22	2	9	1	N-D	10
	69	DI-N-OCTYL PHTHALATE	UG/L	17	0	22	0				
	70	DIETHYL PHTHALATE	UG/L	17	3	22	3	14	1	N-D	30
	71	DIMETHYL PHTHALATE	UG/L	17	1	22	1	5	L 1	N-D	3
	72	1,2-BENZANTHRACENE	UG/L	17	0	22	0				
	73	BENZO (A)PYRENE	UG/L	17	2	22	2	9	L 1	N-D	3
	74	3,4-BENZOFLUORANTHENE	UG/L	17	0	22	0				
	75	11,12-BENZOFLUORANTHENE	UG/L	17	0	22	0				
	76	CHRYSENE	UG/L	17	3	22	3	14	L 1	L 1	1
	77	ACENAPHTHYLENE	UG/L	17	0	22	0				
	78	ANTHRACENE	UG/L	17	0	22	0				
	79	1,12-BENZOPERYLENE	UG/L	17	0	22	0				
	80	FLUORENE	UG/L	17	0	22	0				
	81	PHENANTHRENE	UG/L	17	1	22	1	5	L 1	L 1	1
	82	1,2;5,6-DIBENZANTHRACENE	UG/L	17	0	22	0				
	83	INDENO(1,2,3-C,D) PYRENE	UG/L	17	0	22	0				
	84	PYRENE	UG/L	17	1	22	1	5	L 1	L 1	7
PESTICIDES	89	ALDRIN	UG/L	17	0	17	0				
	90	DIELDRIN	UG/L	17	0	17	0				
	91	CHLORDANE	UG/L	17	0	17	0				

Note: Laboratory analysis reported as less than a detection limit is considered not detected (value = 0) for this table.

L-LESS THAN; T-TRACE; N-D NOT DETECTED; G-GREATER THAN;

TABLE V-27
DIRECT DISCHARGE
FINAL EFFLUENT PRIORITY POLLUTANTS
SUMMARY OF EPA SCREENING PROGRAM DATA

FRACTION	PAR. NO.	PARAMETER	UNITS	PLANTS SAMPLED	PLANTS DETECTING	TOTAL SAMPLES ANALYZED	TOTAL TIMES DETECTED	PER-CENT	AVERAGE	MINIMUM	MAXIMUM
PESTICIDES	92	4,4'-DDT	UG/L	17	0	17	0				
	93	4,4'-DDE	UG/L	17	0	17	0				
	94	4,4'-DDD	UG/L	17	0	17	0				
	95	ALPHA-ENDOSULFAN	UG/L	17	0	17	0				
	96	BETA-ENDOSULFAN	UG/L	17	0	17	0				
	97	ENDOSULFAN SULFATE	UG/L	17	0	17	0				
	98	ENDRIN	UG/L	17	0	17	0				
	99	ENDRIN ALDEHYDE	UG/L	17	0	17	0				
	100	HEPTACHLOR	UG/L	17	0	17	0				
	101	HEPTACHLOR EPOXIDE	UG/L	17	0	17	0				
	102	ALPHA-BHC	UG/L	17	0	17	0				
	103	BETA-BHC	UG/L	17	0	17	0				
	104	GAMMA-BHC	UG/L	17	0	17	0				
	105	DELTA-BHC	UG/L	17	0	17	0				
	106	PCB-1242	UG/L	17	0	17	0				
	107	PCB-1254	UG/L	17	0	17	0				
	108	PCB-1221	UG/L	17	0	17	0				
	109	PCB-1232	UG/L	17	0	17	0				
	110	PCB-1248	UG/L	17	0	17	0				
	111	PCB-1260	UG/L	17	0	17	0				
	112	PCB-1016	UG/L	17	0	17	0				
	113	TOXAPHENE	UG/L	17	0	17	0				
	129	TCDD	UG/L	17	0	22	0				
METALS	114	ANTIMONY	UG/L	17	3	17	3	18	22 L	1	370
	115	ARSENIC	UG/L	17	4	21	8	38	177 L	4	900
	117	BERYLLIUM	UG/L	17	1	84	2	2	L 1 L	1	2
	118	CADMIUM	UG/L	17	5	86	5	6	L 1 L	1	20
	119	CHROMIUM	UG/L	17	17	87	68	78	115 L	5	1230
	120	COPPER	UG/L	17	12	85	46	54	23 L	4	300
	121	CYANIDE	UG/L	17	8	54	26	48	39 L	5	320
	122	LEAD	UG/L	17	7	87	20	23	14 L	15	211
	123	MERCURY	UG/L	16	11	72	53	74	1 L	1	12
	124	NICKEL	UG/L	17	7	89	20	22	8 L	1	74
	125	SELENIUM	UG/L	17	7	31	21	68	11 L	10	32
	126	SILVER	UG/L	17	2	84	3	4	L 1 L	1	15
	127	THALLIUM	UG/L	17	2	32	5	16	1 L	1	12
	128	ZINC	UG/L	17	16	92	74	80	203 L	10	2000
NON-CONV. METALS	148	HEX-CHROMIUM	UG/L	16	5	48	6	13	5 L	20	110
MISC.	167	PHENOLICS (4AAPO)	UG/L	16	14	45	34	76	16 L	10	64

Note: Laboratory analysis reported as less than a deduction limit is considred not detected (value = 0) for this table.

L-LESS THAN; T-TRACE; N-D NOT DETECTED; G-GREATER THAN;

TABLE V-28
INDIRECT DISCHARGE (TO POTW)
PRIORITY POLLUTANTS
SUMMARY OF EPA
PRETREATMENT PROGRAM DATA

FRACTION	PAR. NO.	PARAMETER	UNITS	PLANTS SAMPLED	PLANTS DETECTING	TOTAL SAMPLES ANALYZED	TOTAL TIMES DETECTED	PER-CENT	AVERAGE	MINIMUM	MAXIMUM
VOLATILES	2	ACROLEIN	UG/L	6	0	18	0				
	3	ACRYLONITRILE	UG/L	6	0	18	0				
	4	BENZENE	UG/L	6	6	18	12	67	817	N-D	5800
	6	CARBON TETRACHLORIDE	UG/L	6	0	15	0				
	7	CHLOROBENZENE	UG/L	6	1	15	1	7	2	N-D	31
	10	1,2-DICHLOROETHANE	UG/L	6	1	15	2	13	6	N-D	54
	11	1,1,1-TRICHLOROETHANE	UG/L	6	2	15	2	13	2	N-D	15
	13	1,1-DICHLOROETHANE	UG/L	6	0	15	0				
	14	1,1,2-TRICHLOROETHANE	UG/L	6	0	18	0				
	15	1,1,2,2-TETRACHLOROETHANE	UG/L	6	0	15	0				
	16	CHLOROETHANE	UG/L	6	0	18	0				
	17	BIS(CHLOROMETHYL) ETHER	UG/L	6	0	18	0				
	19	2-CHLOROETHYL VINYL ETHER	UG/L	6	0	18	0				
	23	CHLOROFORM	UG/L	6	3	15	6	40	7	N-D	21
	29	1,1-DICHLOROETHYLENE	UG/L	6	0	15	0				
	30	1,2-TRANS-DICHLOROETHYLENE	UG/L	6	0	15	0				
	32	1,2-DICHLOROPROPANE	UG/L	6	0	18	0				
	33	1,3-DICHLOROPROPYLENE	UG/L	6	0	15	0				
	38	ETHYLBENZENE	UG/L	6	5	15	11	73	2540	N-D	18000
	44	METHYLENE CHLORIDE	UG/L	6	1	15	1	7	1	N-D	12
	45	METHYL CHLORIDE	UG/L	6	0	18	0				
	46	METHYL BROMIDE	UG/L	6	0	18	0				
	47	BROMOFORM	UG/L	6	0	18	0				
	48	DICHLOROBROMOMETHANE	UG/L	6	0	15	0				
	49	TRICHLOROFLUOROMETHANE	UG/L	6	0	18	0				
	50	DICHLORODIFLUOROMETHANE	UG/L	6	0	18	0				
	51	CHLORODIBROMOMETHANE	UG/L	6	0	15	0				
	85	TETRACHLOROETHYLENE	UG/L	6	1	15	1	7	1	N-D	18
	86	TOLUENE	UG/L	6	5	15	11	73	6216	N-D	48000
	87	TRICHLOROETHYLENE	UG/L	6	0	15	0				
	88	VINYL CHLORIDE	UG/L	6	0	18	0				
ACID EXTRACT	21	2,4,6-TRICHLOROPHENOL	UG/L	6	0	18	0				
	22	PARACHLOROMETA CRESOL	UG/L	6	0	15	0				
	24	2-CHLOROPHENOL	UG/L	6	0	15	0				
	31	2,4-DICHLOROPHENOL	UG/L	6	0	18	0				
	34	2,4-DIMETHYLPHENOL	UG/L	6	6	15	14	93	1509	N-D	9300
	57	2-NITROPHENOL	UG/L	6	0	18	0				
	58	4-NITROPHENOL	UG/L	6	0	18	0				
	59	2,4-DINITROPHENOL	UG/L	6	0	18	0				
	60	4,6-DINITRO-O-CRESOL	UG/L	6	0	18	0				
	64	PENTACHLOROPHENOL	UG/L	6	1	16	1	6	52	N-D	830
	65	PHENOL	UG/L	6	6	15	12	80	1942	N-D	14000
BASE-NEUTRALS	1	ACENAPHTHENE	UG/L	6	2	15	3	20	5	N-D	41
	5	BENZIDINE	UG/L	6	0	18	0				
	8	1,2,4-TRICHLOROBENZENE	UG/L	6	0	15	0				

Note: Laboratory analysis reported as less than a detection limit is considered not detected (value = 0) for this table.

L-LESS THAN; T-TRACE; N-D NOT DETECTED;

TABLE V-28
INDIRECT DISCHARGE (TO POTW)
PRIORITY POLLUTANTS
SUMMARY OF EPA
PRETREATMENT PROGRAM DATA

FRACTION	PAR. NO.	PARAMETER	UNITS	PLANTS SAMPLED	PLANTS DETECTING	TOTAL SAMPLES ANALYZED	TOTAL TIMES DETECTED	PER-CENT	AVERAGE	MINIMUM	MAXIMUM
BASE-NEUTRALS	9	HEXACHLOROBENZENE	UG/L	6	0	18	0				
	12	HEXACHLOROETHANE	UG/L	6	0	18	0				
	18	BIS(2-CHLOROETHYL) ETHER	UG/L	6	0	18	0				
	20	2-CHLORONAPHTHALENE	UG/L	6	0	18	0				
	25	1,2-DICHLOROBENZENE	UG/L	6	0	15	0				
	26	1,3-DICHLOROBENZENE	UG/L	6	0	17	0				
	27	1,4-DICHLOROBENZENE	UG/L	6	0	15	0				
	28	3,3'-DICHLOROBENZIDINE	UG/L	6	0	18	0				
	35	2,4-DINITROTOLUENE	UG/L	6	0	15	0				
	36	2,6-DINITROTOLUENE	UG/L	6	0	18	0				
	37	1,2-DIPHENYLHYDRAZINE	UG/L	6	1	15	1	7	2	N-D	23
	39	FLUORANTHENE	UG/L	6	0	15	0				
	40	4-CHLOROPHENYL PHENYL ETHER	UG/L	6	0	18	0				
	41	4-BROMOPHENYL PHENYL ETHER	UG/L	6	0	18	0				
	42	BIS(2-CHLOROISOPROPYL) ETHER	UG/L	6	0	15	0				
	43	BIS(2-CHLOROETHYOXY) METHANE	UG/L	6	0	15	0				
	52	HEXACHLOROBUTADIENE	UG/L	6	0	18	0				
	53	HEXACHLOROCYCLOPENTADIENE	UG/L	6	0	18	0				
	54	ISOPHORONE	UG/L	6	1	15	1	7	1	N-D	12
	55	NAPHTHALENE	UG/L	6	5	14	11	79	169	N-D	620
	56	NITROBENZENE	UG/L	6	0	18	0				
	61	N-NITROSODIMETHYLAMINE	UG/L	6	0	18	0				
	62	N-NITROSODIPHENYLAMINE	UG/L	6	0	15	0				
	63	N-NITROSODI-N-PROPYLAMINE	UG/L	6	0	18	0				
	66	BIS(2-ETHYLHEXYL) PHTHALATE	UG/L	6	0	15	0				
	67	BUTYL BENZYL PHTHALATE	UG/L	6	2	15	2	13	2	N-D	16
	68	DI-N-BUTYL PHTHALATE	UG/L	6	1	15	1	7	3	N-D	40
	69	DI-N-OCTYL PHTHALATE	UG/L	6	0	15	0				
	70	DIETHYL PHTHALATE	UG/L	6	4	15	4	27	5	N-D	38
	71	DIMETHYL PHTHALATE	UG/L	6	0	15	0				
	72	1,2-BENZANTHRACENE	UG/L	6	1	15	1	7	1	N-D	12
	73	BENZO (A)PYRENE	UG/L	6	0	18	0				
	74	3,4-BENZOFLUORANTHENE	UG/L	6	0	18	0				
	75	11,12-BENZOFLUORANTHENE	UG/L	6	0	18	0				
	76	CHRYSENE	UG/L	6	1	15	1	7	1	N-D	12
	77	ACENAPHTHYLENE	UG/L	6	0	15	0				
	78	ANTHRACENE	UG/L	6	3	15	8	53	25	N-D	81
	79	1,12-BENZOPERYLENE	UG/L	6	0	18	0				
	80	FLUORENE	UG/L	6	2	15	3	20	7	N-D	63
	81	PHENANTHRENE	UG/L	6	3	15	8	53	25	N-D	81
	82	1,2,5,6-DIBENZANTHRACENE	UG/L	6	0	18	0				
	83	INDENO(1,2,3-C,D) PYRENE	UG/L	6	0	18	0				
	84	PYRENE	UG/L	6	2	15	2	13	2	N-D	21
PESTICIDES	89	ALDRIN	UG/L	6	2	15	2	13	L 1	N-D	1
	90	DIELDRIN	UG/L	6	0	15	0				
	91	CHLORDANE	UG/L	6	0	18	0				

Note: Laboratory analysis reported as less than a detection limit is considered not detected (value = 0) for this table.

L-LESS THAN; T-TRACE; N-D NOT DETECTED;

TABLE V-28
INDIRECT DISCHARGE (TO POTW)
PRIORITY POLLUTANTS
SUMMARY OF EPA
PRETREATMENT PROGRAM DATA

FRACTION	PAR. NO.	PARAMETER	UNITS	PLANTS SAMPLED	PLANTS DETECTING	TOTAL SAMPLES ANALYZED	TOTAL TIMES DETECTED	PER CENT	AVERAGE	MINIMUM	MAXIMUM
PESTICIDES	92	4,4'-DDT	UG/L	6	3	15	4	27	L 1	N-D	5
	93	4,4'-DDE	UG/L	6	1	15	1	7	L 1	N-D	L 1
	94	4,4'-DDD	UG/L	6	0	15	0				
	95	ALPHA-ENDOSULFAN	UG/L	6	0	15	0				
	96	BETA-ENDOSULFAN	UG/L	6	0	18	0				
	97	ENDOSULFAN SULFATE	UG/L	6	0	18	0				
	98	ENDRIN	UG/L	6	0	18	0				
	99	ENDRIN ALDEHYDE	UG/L	6	0	18	0				
	100	HEPTACHLOR	UG/L	6	0	15	0				
	101	HEPTACHLOR EPOXIDE	UG/L	6	0	15	0				
	102	ALPHA-BHC	UG/L	6	5	15	6	40	L 1	N-D	2
	103	BETA-BHC	UG/L	6	1	15	2	13	L 1	N-D	L 1
	104	GAMMA-BHC	UG/L	6	0	15	0				
	105	DELTA-BHC	UG/L	6	0	15	0				
	106	PCB-1242	UG/L	6	0	18	0				
	107	PCB-1254	UG/L	6	0	18	0				
	108	PCB-1221	UG/L	6	0	18	0				
	109	PCB-1232	UG/L	6	0	18	0				
	110	PCB-1248	UG/L	6	0	18	0				
	111	PCB-1260	UG/L	6	0	18	0				
	112	PCB-1016	UG/L	6	0	18	0				
	113	TOXAPHENE	UG/L	6	0	18	0				
	129	TCDD	UG/L	6	0	18	0				
METALS	114	ANTIMONY	UG/L	6	0	18	0				
	115	ARSENIC	UG/L	6	4	18	7	39	18	N-D	69
	117	BERYLLIUM	UG/L	6	0	18	0				
	118	CADMIUM	UG/L	6	0	18	0				
	119	CHROMIUM	UG/L	6	6	18	18	100	1057	64	2196
	120	COPPER	UG/L	6	6	18	16	89	21	N-D	57
	121	CYANIDE	UG/L	6	6	18	18	100	2526	10	9000
	122	LEAD	UG/L	6	5	19	10	53	18	N-D	43
	123	MERCURY	UG/L	6	2	18	5	28	L 1	N-D	1
	124	NICKEL	UG/L	6	1	18	1	6	2	N-D	27
	125	SELENIUM	UG/L	6	6	18	16	89	192	N-D	682
	126	SILVER	UG/L	6	0	18	0				
	127	THALLIUM	UG/L	6	0	18	0				
	128	ZINC	UG/L	6	6	18	18	100	167	36	405
NON-CONV. METALS	148	HEX-CHROMIUM	UG/L	6	1	18	3	17	53 L	20	480
MISC.	116	ASBESTOS	UG/L	6	0	18	0				
	167	PHENOLICS (4AAPD)	UG/L	6	6	18	18	100	56900	1100	151000

Note: Laboratory analysis reported as less than a detection limit is considered not detected (value = 0) for this table.

L-LESS THAN; T-TRACE; N-D NOT DETECTED;

TABLE V-29
FINAL EFFLUENT PRIORITY POLLUTANTS
SUMMARY OF EPA
REGIONAL SURVEILLANCE AND ANALYSIS DATA

FRACTION	PAR. NO.	PARAMETER	UNITS	PLANTS SAMPLED	PLANTS DETECTING	TOTAL SAMPLES ANALYZED	TOTAL TIMES DETECTED	PER-CENT	AVERAGE	MINIMUM	MAXIMUM
VOLATILES	2	ACROLEIN	UG/L	7	0	8	0				
	3	ACRYLONITRILE	UG/L	7	0	8	0				
	4	BENZENE	UG/L	7	0	8	0				
	6	CARBON TETRACHLORIDE	UG/L	7	0	8	0				
	7	CHLOROBENZENE	UG/L	7	0	8	0				
	10	1,2-DICHLOROETHANE	UG/L	7	2	10	2	20	L 1	N-D	3
	11	1,1,1-TRICHLOROETHANE	UG/L	7	2	8	2	25	1	N-D	3
	13	1,1-DICHLOROETHANE	UG/L	7	0	8	0				
	14	1,1,2-TRICHLOROETHANE	UG/L	7	0	8	0				
	15	1,1,2,2-TETRACHLOROETHANE	UG/L	7	0	8	0				
	16	CHLOROETHANE	UG/L	7	0	8	0				
	17	BIS(CHLOROMETHYL) ETHER	UG/L	7	0	8	0				
	19	2-CHLOROETHYL VINYL ETHER	UG/L	7	0	8	0				
	23	CHLOROFORM	UG/L	7	2	10	2	20	L 1	L 10	1
	29	1,1-DICHLOROETHYLENE	UG/L	7	0	8	0				
	30	1,2-TRANS-DICHLOROETHYLENE	UG/L	7	0	8	0				
	32	1,2-DICHLOROPROPANE	UG/L	7	1	8	1	13	L 1	N-D	1
	33	1,3-DICHLOROPROPYLENE	UG/L	7	0	8	0				
	38	ETHYLBENZENE	UG/L	7	1	8	1	13	L 1	N-D	L 1
	44	METHYLENE CHLORIDE	UG/L	7	3	9	3	33	2	L 10	9
	45	METHYL CHLORIDE	UG/L	7	0	8	0				
	46	METHYL BROMIDE	UG/L	7	0	8	0				
	47	BROMOFORM	UG/L	7	1	8	1	13	L 1	L 10	1
	48	DICHLOROBROMOMETHANE	UG/L	7	0	8	0				
	49	TRICHLOROFLUOROMETHANE	UG/L	7	0	8	0				
	50	DICHLORODIFLUOROMETHANE	UG/L	7	0	8	0				
	51	CHLORODIBROMOMETHANE	UG/L	7	2	9	2	22	2	L 10	13
	85	TETRACHLOROETHYLENE	UG/L	7	0	8	0				
	86	TOLUENE	UG/L	7	0	8	0				
	87	TRICHLOROETHYLENE	UG/L	7	0	8	0				
	88	VINYL CHLORIDE	UG/L	7	0	8	0				
	200	TRANS-1,3-DICHLOROPROPENE	UG/L	7	0	8	0				
ACID EXTRACT	21	2,4,6-TRICHLOROPHENOL	UG/L	7	0	8	0				
	22	PARACHLOROMETA CRESOL	UG/L	7	0	8	0				
	24	2-CHLOROPHENOL	UG/L	7	0	8	0				
	31	2,4-DICHLOROPHENOL	UG/L	7	0	8	0				
	34	2,4-DIMETHYLPHENOL	UG/L	7	0	8	0				
	57	2-NITROPHENOL	UG/L	7	0	8	0				
	58	4-NITROPHENOL	UG/L	7	0	8	0				
	59	2,4-DINITROPHENOL	UG/L	7	0	8	0				
	60	4,6-DINITRO-O-CRESOL	UG/L	7	0	8	0				
	64	PENTACHLOROPHENOL	UG/L	7	0	8	0				
	65	PHENOL	UG/L	7	1	9	1	11	8	N-D	76
BASE-NEUTRALS	1	ACENAPHTHENE	UG/L	7	0	8	0				

L-LESS THAN; T-TRACE; N-D NOT DETECTED;

TABLE V-29
FINAL EFFLUENT PRIORITY POLLUTANTS
SUMMARY OF EPA
REGIONAL SURVEILLANCE AND ANALYSIS DATA

FRACTION	PAR. NO.	PARAMETER	UNITS	PLANTS SAMPLED	PLANTS DETECTING	TOTAL SAMPLES ANALYZED	TOTAL TIMES DETECTED	PER-CENT	AVERAGE	MINIMUM	MAXIMUM
BASE-NEUTRALS	5	BENZIDINE	UG/L	7	0	8	0				
	8	1,2,4-TRICHLOROBENZENE	UG/L	7	0	8	0				
	9	HEXACHLOROBENZENE	UG/L	7	0	8	0				
	12	HEXACHLOROETHANE	UG/L	7	0	8	0				
	18	BIS(2-CHLOROETHYL) ETHER	UG/L	7	0	8	0				
	20	2-CHLORONAPHTHALENE	UG/L	7	0	8	0				
	25	1,2-DICHLOROBENZENE	UG/L	7	0	8	0				
	26	1,3-DICHLOROBENZENE	UG/L	7	0	8	0				
	27	1,4-DICHLOROBENZENE	UG/L	7	0	8	0				
	28	3,3'-DICHLOROBENZIDINE	UG/L	7	0	8	0				
	35	2,4-DINITROTOLUENE	UG/L	7	0	8	0				
	36	2,6-DINITROTOLUENE	UG/L	7	0	8	0				
	37	1,2-DIPHENYLHYDRAZINE	UG/L	7	0	8	0				
	39	FLUORANTHENE	UG/L	7	0	8	0				
	40	4-CHLOROPHENYL PHENYL ETHER	UG/L	7	0	8	0				
	41	4-BROMOPHENYL PHENYL ETHER	UG/L	7	0	8	0				
	42	BIS(2-CHLOROISOPROPYL) ETHER	UG/L	7	0	8	0				
	43	BIS(2-CHLOROETHYOXY) METHANE	UG/L	7	0	8	0				
	52	HEXACHLOROBUTADIENE	UG/L	7	0	8	0				
	53	HEXACHLOROCYCLOPENTADIENE	UG/L	7	0	8	0				
	54	ISOPHORONE	UG/L	7	1	8	1	13	34	N-D	270
	55	NAPHTHALENE	UG/L	7	0	8	0				
	56	NITROBENZENE	UG/L	7	0	8	0				
	61	N-NITROSODIMETHYLAMINE	UG/L	7	0	8	0				
	62	N-NITROSODIPHENYLAMINE	UG/L	7	0	8	0				
	63	N-NITROSODI-N-PROPYLAMINE	UG/L	7	0	8	0				
	66	BIS(2-ETHYLHEXYL) PHTHALATE	UG/L	7	3	8	3	38	16 L	10	75
	67	BUTYL BENZYL PHTHALATE	UG/L	7	0	8	0				
	68	DI-N-BUTYL PHTHALATE	UG/L	7	1	8	1	13	1 L	10	9
	69	DI-N-OCTYL PHTHALATE	UG/L	7	0	8	0				
	70	DIETHYL PHTHALATE	UG/L	7	0	8	0				
	71	DIMETHYL PHTHALATE	UG/L	7	0	8	0				
	72	1,2-BENZANTHRACENE	UG/L	7	0	8	0				
	73	BENZO (A)PYRENE	UG/L	7	0	8	0				
	74	3,4-BENZOFLUORANTHENE	UG/L	7	0	8	0				
	75	11,12-BENZOFLUORANTHENE	UG/L	7	0	8	0				
	76	CHRYSENE	UG/L	7	0	8	0				
	77	ACENAPHTHYLENE	UG/L	7	1	8	1	13 L	1	N-D	1
	78	ANTHRACENE	UG/L	7	0	8	0				
	79	1,12-BENZOPERYLENE	UG/L	7	0	8	0				
	80	FLUORENE	UG/L	7	0	8	0				
	81	PHENANTHRENE	UG/L	7	0	8	0				
	82	1,2;5,6-DIBENZANTHRACENE	UG/L	7	0	8	0				
	83	INDENO(1,2,3-C,D) PYRENE	UG/L	7	0	8	0				
	84	PYRENE	UG/L	7	0	8	0				
	207	ANTHRACENE/PHENANTHRENE	UG/L	7	1	8	1	13	9	N-D	80

L-LESS THAN; T-TRACE; N-D NOT DETECTED;

TABLE V-29
FINAL EFFLUENT PRIORITY POLLUTANTS
SUMMARY OF EPA
REGIONAL SURVEILLANCE AND ANALYSIS DATA

FRACTION	PAR. NO.	PARAMETER	UNITS	PLANTS SAMPLED	PLANTS DETECTING	TOTAL SAMPLES ANALYZED	TOTAL TIMES DETECTED	PER-CENT	AVERAGE	MINIMUM	MAXIMUM
PESTICIDES	89	ALDRIN	UG/L	7	0	8	0				
	90	DIELDRIN	UG/L	7	0	8	0				
	91	CHLORDANE	UG/L	7	0	8	0				
	92	4,4'-DDT	UG/L	7	0	8	0				
	93	4,4'-DDE	UG/L	7	0	8	0				
	94	4,4'-DDD	UG/L	7	0	8	0				
	95	ALPHA-ENDOSULFAN	UG/L	7	0	8	0				
	96	BETA-ENDOSULFAN	UG/L	7	0	8	0				
	97	ENDOSULFAN SULFATE	UG/L	7	0	8	0				
	98	ENDRIN	UG/L	7	0	8	0				
	99	ENDRIN ALDEHYDE	UG/L	7	0	8	0				
	100	HEPTACHLOR	UG/L	7	0	8	0				
	101	HEPTACHLOR EPOXIDE	UG/L	7	0	8	0				
	102	ALPHA-BHC	UG/L	7	0	8	0				
	103	BETA-BHC	UG/L	7	0	8	0				
	104	GAMMA-BHC	UG/L	7	0	8	0				
	105	DELTA-BHC	UG/L	7	0	8	0				
	106	PCB-1242	UG/L	7	0	8	0				
	107	PCB-1254	UG/L	7	0	8	0				
	108	PCB-1221	UG/L	7	0	8	0				
	109	PCB-1232	UG/L	7	0	8	0				
	110	PCB-1248	UG/L	7	0	8	0				
	111	PCB-1260	UG/L	7	0	8	0				
	112	PCB-1016	UG/L	7	0	8	0				
	113	TOXAPHENE	UG/L	7	0	8	0				
	129	TCDD	UG/L	7	0	8	0				
METALS	114	ANTIMONY	UG/L	7	2	8	2	25	20 L	5	98
	115	ARSENIC	UG/L	7	1	8	1	13	4 L	5	28
	117	BERYLLIUM	UG/L	6	2	7	2	29	7 L	25	40
	118	CADMIUM	UG/L	7	3	8	3	38	6 L	10	35
	119	CHROMIUM	UG/L	7	6	9	8	89	149 L	5	480
	120	COPPER	UG/L	7	6	9	7	78	11 L	10	20
	121	CYANIDE	UG/L	7	3	8	4	50	3	N-D	8
	122	LEAD	UG/L	7	5	9	5	56	33	N-D	160
	123	MERCURY	UG/L	7	5	8	5	63	L 1 L	1	1
	124	NICKEL	UG/L	7	3	8	3	38	13 L	5	39
	125	SELENIUM	UG/L	7	1	8	1	13	2 L	5	18
	126	SILVER	UG/L	7	1	8	1	13	L 1 L	5	2
	127	THALLIUM	UG/L	7	1	8	1	13	13 L	10	100
	128	ZINC	UG/L	7	7	10	9	90	258 L	10	620
NON-CONV. METALS	148	HEX-CHROMIUM	UG/L	7	0	8	0				
MISC.	116	ASBESTOS	UG/L	2	0	2	0				
	167	PHENOLICS (4AAPO)	UG/L	8	7	9	8	89	46	N-D	125

L-LESS THAN; T-TRACE; N-D NOT DETECTED;

TABLE V-30

MOST-FREQUENTLY OCCURRING PRIORITY POLLUTANTS*
PLANT 1

Parameter	Times Detected	Average (ug/l)	Range (ug/l)
Influent			
Volatiles - 30 samples analyzed			
Benzene	30	27,083	5800 - 75000
Toluene	28	6,877	ND - 17000
Extractables - 30 samples analyzed			
2, 4 Dimethyphenol	29	256	ND - 800
Phenol	30	769	180 - 1800
Napthalene	30	253	72 - 610
Bis (2-ethylhexyl) Phthalate	28	26	ND - 170
Di-N-Butyl Phthalate	26	8	ND - 30
Anthracene/Phenanthracene	30	38	5 - 120
Fluorene	30	20	L5 - 79
Pyrene	25	23	ND - 400
Metals - 30 samples analyzed			
Arsenic	26	10	L1 - 24
Chromium	30	320	120 - 920
Selenium	29	28	L1 - 81
Zinc	30	350	22 - 1900
Effluent			
Extractables - 29 samples analyzed			
Phenol	28	12	ND - 55
Di-N-Butyl Phthalate	28	9	ND - 27
Metals - 30 samples analyzed			
Arsenic	26	8	L1 - 21
Chromium	30	103	50 - 167
Selenium	29	31	L1 - 72
Zinc	26	69	9 - 411

Notes:

*Pollutants occurring in 80 percent of samples taken from each point
L - Less than
ND - Not detected

TABLE V-31

MOST-FREQUENTLY OCCURRING PRIORITY POLLUTANTS*
PLANT 2

Parameter	Times Detected	Average(ug/l)	Range(ug/l)
Influent			
Volatiles - 30 samples analyzed			
Benzene	30	18,747	3600 - 90000
Ethylbenzene	29	1,890	ND - 3800
Toluene	30	8,573	2300 - 20000
Extractables - 29 samples analyzed			
2, 4-Dimethylphenol	29	272	60 - 720
Phenol	29	3,007	1200 - 6300
Naphthalene	29	289	89 - 810
Bis (2-ethylhexyl) Phthalate	26	21	ND - 205
Di-N-Butyl Phthalate	23	5	ND - 19
Chrysene/1, 2 Benzoanthracene	26	32	ND - 150
Anthracene/Phenanthracene	29	195	11 - 730
Fluorene	28	77	ND - 383
Pyrene	23	23	ND - 72
Metals - 30 samples analyzed			
Chromium	30	1,324	70 - 3420
Selenium	27	18	L1 - 76
Zinc	30	516	9 - 1840
Effluent			
Extractables - 28 samples analyzed			
Phenol	26	8	ND - 51
Bis (2-ethylhexyl Phthalate)	23	17	ND - 260
Di-N-Butyl Phthalate	26	6	ND - 12
Metals - 30 samples analyzed			
Arsenic	26	7	L1 - 20
Chromium	30	160	20 - 1250
Selenium	28	21	L1 - 71
Zinc	27	60	L9 - 339

Notes:

*Pollutants occurring in 80 percent of samples taken from each point
L - Less than
ND - Not detected

TABLE V-32

POTENTIAL SURROGATES FOR PRIORITY POLLUTANTS
CORRELATION COEFFICIENTS

(Statistics obtained by removing
outliers shown in parentheses)

Pollutant		Total Phenol	Chromium
PP Organics	Plant 1	0.681 (-0.013)	
	Plant 2	-0.011 (0.027)	
PP Organics Appendix C Alkanes	Plant 1	0.545	
	Plant 2	-0.104	
PP Metals	Plant 1		0.39
	Plant 2		0.844 (0.589)
Total Metals	Plant 1		0.571
	Plant 2		-0.057 (0.108)

TABLE V-33

SUMMARY OF 1976 NET WASTEWATER FLOW
BY REFINERY SIZE

(Million Gallons Per Day)

Size Class (1000 bbl crude Capacity)	Number of Refineries	Total for Size Class	Average for Size Class	Fraction of Total Industry Flow
(A) LT 50-1	143	37.75	0.264	0.0895
(B) 50 - 100	50	72.25	1.450	0.1713
(C) 100 - 200	32	131.90	4.122	0.3126
(D) GT 200-2	18	180.00	10.000	0.4266
	243	421.90	1.736	1.0000

Footnotes:

(1) LT = less than
(2) GT = greater than

TABLE V-34

SUMMARY OF 1976 NET WASTEWATER FLOW
BY REFINERY SUBCATEGORY

(Million Gallons Per Day)

Subcategory	Number of Refineries	Total for Subcategory	Average for Subcategory	Fraction of Total Industry Flow
(A) Topping	85	10.880	0.128	0.0258
(B) Cracking	103	135.857	1.319	0.3218
(C) Petrochemical	24	84.816	3.534	0.2008
(D) Lube	20	88.080	4.404	0.2086
(E) Integrated	11	102.597	9.327	0.240
All Subcategories	243	422.230	1.738	1.0000

FIGURE V-1

HISTOGRAM OF NET WASTEWATER FLOW BY SIZE CLASS

SYMBOL	COUNT	MEAN	ST.DEV.
LT50	A	143	0.264	0.386
50-100	B	50	1.450	1.282
100-200	C	32	4.122	2.849
GT200	D	18	10.002	5.545

```
FLOW
(MGD)
          5   10   15   20   25   30   35   40   45   50   55   60   65   70   75   80
        +----+----+----+----+----+----+----+----+----+----+----+----+----+----+----+----+
* .50000 †AAAA
```

FIGURE V-2

HISTOGRAM OF NET WASTEWATER FLOW
BY SUBCATEGORY

	SYMBOL	COUNT	MEAN	ST.DEV.
A	A	85	0.128	0.210
B	B	103	1.319	1.682
C	C	24	3.534	3.857
D	D	20	4.404	5.508
E	E	11	9.327	5.477

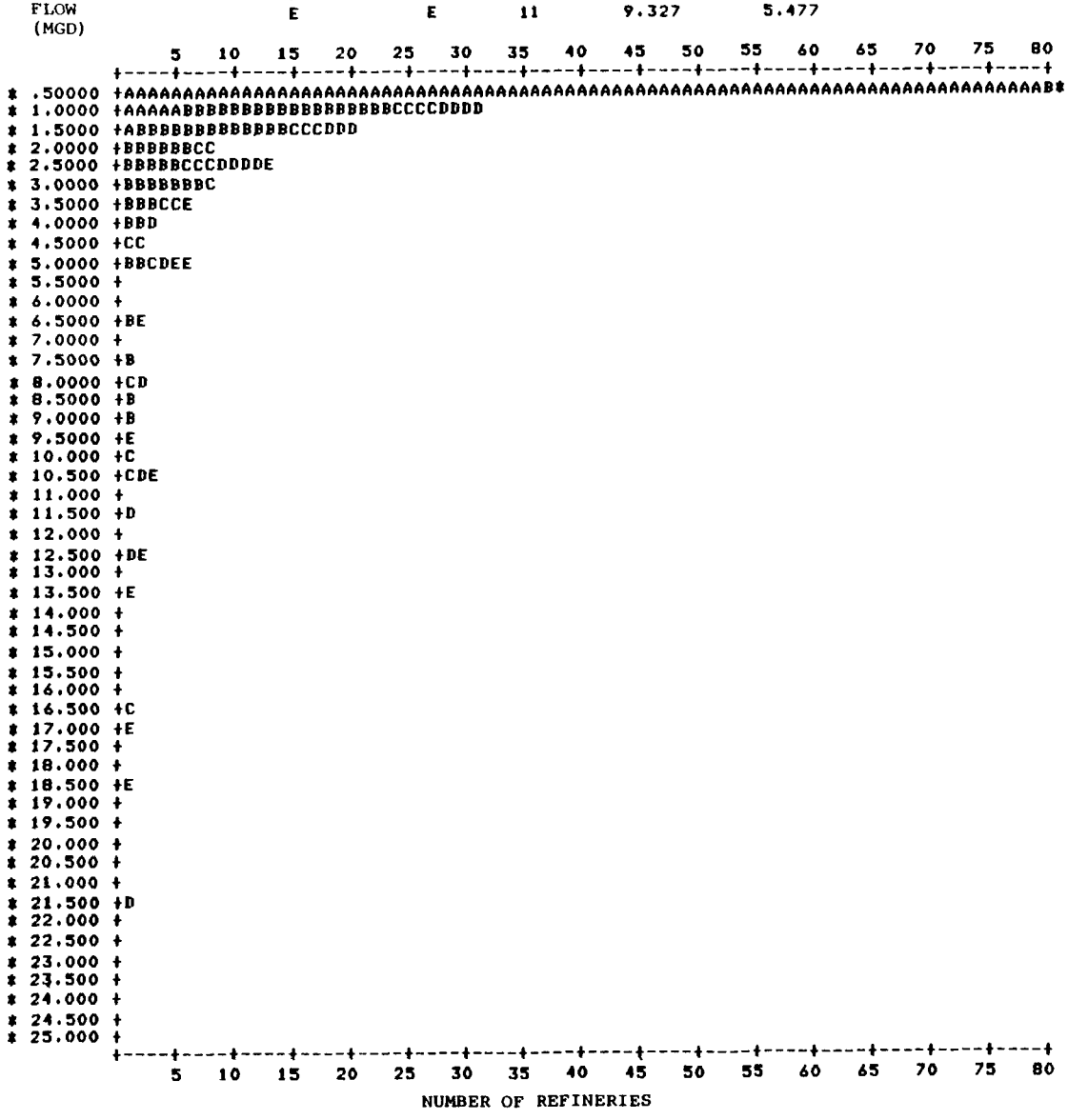

FREQUENCY INT.	FREQUENCY CUM.	PERCENTAGE INT.	PERCENTAGE CUM.
126	126	51.9	51.9
31	157	12.8	64.6
20	177	8.2	72.8
8	185	3.3	76.1
13	198	5.3	81.5
8	206	3.3	84.8
6	212	2.5	87.2
3	215	1.2	88.5
2	217	0.8	89.3
6	223	2.5	91.8
0	223	0.0	91.8
0	223	0.0	91.8
2	225	0.8	92.6
0	225	0.0	92.6
1	226	0.4	93.0
2	228	0.8	93.8
1	229	0.4	94.2
1	230	0.4	94.7
1	231	0.4	95.1
1	232	0.4	95.5
3	235	1.2	96.7
0	235	0.0	96.7
1	236	0.4	97.1
0	236	0.0	97.1
2	238	0.8	97.9
0	238	0.0	97.9
1	239	0.4	98.4
0	239	0.0	98.4
0	239	0.0	98.4
0	239	0.0	98.4
0	239	0.0	98.4
0	239	0.0	98.4
1	240	0.4	98.8
1	241	0.4	99.2
0	241	0.0	99.2
0	241	0.0	99.2
1	242	0.4	99.6
0	242	0.0	99.6
0	242	0.0	99.6
0	242	0.0	99.6
0	242	0.0	99.6
0	242	0.0	99.6
1	243	0.4	100.0
0	243	0.0	100.0
0	243	0.0	100.0
0	243	0.0	100.0
0	243	0.0	100.0
0	243	0.0	100.0
0	243	0.0	100.0
0	243	0.0	100.0

FIGURE V-3

HISTORICAL TREND OF TOTAL INDUSTRY WATER USAGE

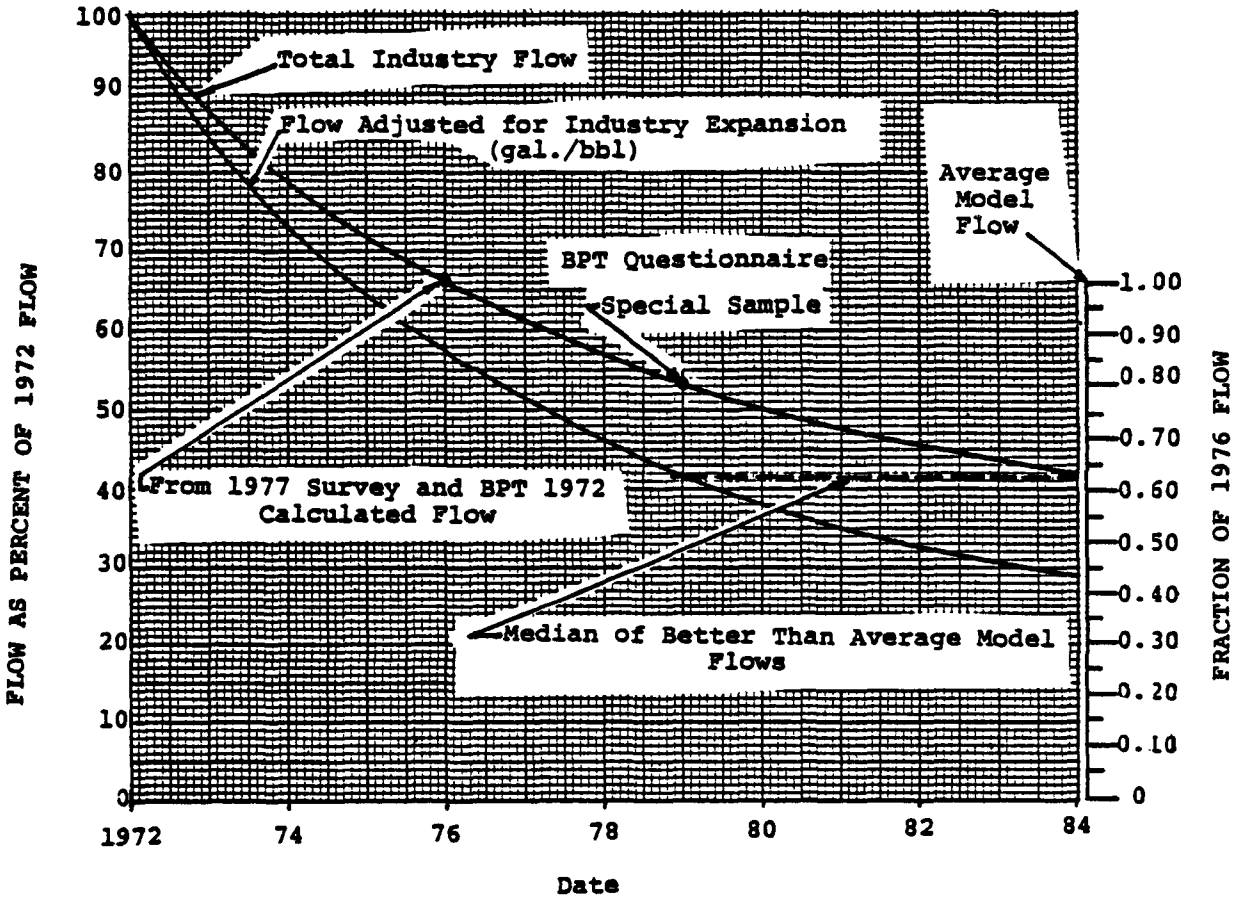

SECTION VI

SELECTION OF POLLUTANTS TO BE REGULATED

INTRODUCTION

The purpose of this section is to describe the selection of pollutants to be regulated. Included here is a description of the selection process (and results) for both the direct and indirect discharge segments of the petroleum refining point source category. Also presented here is a discussion of the environmental effects of certain pollutants.

EPA conducted an extensive sampling and analytical program to determine the presence of toxic, conventional and nonconventional pollutants in petroleum refinery wastewaters (see Section V for details). The program included the sampling of 17 direct dischargers, 6 indirect dischargers, and 2 POTW. Additional long-term wastewater sampling was conducted at two refineries to investigate the possible existence of surrogate relationships between toxic pollutants and other pollutant parameters. The results of these sampling efforts are presented in Section V.

Since results of the various sampling programs are quite similar, the data from the 17 direct and 6 indirect discharge refineries were used as the basis for estimating pollutant loadings and for selecting pollutants to be regulated.

The conventional and nonconventional pollutants analyzed were found frequently in effluent streams. Toxics were detected less frequently and at much lower concentrations. Pollutants from direct discharge refineries that have average concentrations greater than 10 ppb include total chromium, cyanide, zinc, toluene, methylene chloride, and bis (2-ethylhexyl) phthalate. The latter two compounds are contaminants from the analyses and their presence can not be solely attributable to the plants' operation. Cyanide, whose flow weighted concentration averages 45 ug/l, occurs at levels too low to be effectively reduced by feasible technology available to this industry. Zinc found at average concentrations of 105 ug/l is neither causing nor likely to cause toxic effects. Toluene was removed to below measureable limits by all but one direct discharge refinery.

The estimated concentration and discharge loading of the conventional and non-conventional pollutants are summarized in Table VI-1. Similar information on toxics is included in Table VI-2.

Characteristics of wastewaters from indirect discharge refineries prior to their entry into POTW sewers are provided in Table V-28.

SELECTION OF REGULATED POLLUTANTS FOR DIRECT DISCHARGERS

The Act requires that effluent limitations be established for toxic pollutants referred to in Section 307(a)(1). The Settlement Agreement in Natural Resources Defense Council, Incorporated vs. Train, 8 ERC 2120 (D.D.C. 1976), modified, 12 ERC 1833 (D.D.C. 1979), provides for the exclusion of particular pollutants, categories and subcategories (Paragraph 8), according to the criteria summarized below:

1. Equal or more stringent protection is already provided by EPA's guidelines and standards under the Act.

2. The pollutant is present in the effluent discharge solely as a result of its presence in the intake water taken from the same body of water into which it is discharged.

3. The pollutant is not detectable in the effluent within the category by approved analytical methods or methods representing the state-of-the-art capabilities. (Note: this includes cases in which the pollutant is present solely as a result of contamination during sampling and analysis by sources other than the wastewater.)

4. The pollutant is detected in only a small number of sources within the category and is uniquely related to only those sources.

5. The pollutant is present only in trace amounts and is neither causing nor likely to cause toxic effects.

6. The pollutant is present in amounts too small to be effectively reduced by known technologies.

7. The pollutant is effectively controlled by the technologies upon which other effluent limitations and guidelines are based.

Pollutants Selected for Regulation in the Petroleum Refining Point Source Category (Direct Discharge Segment)

Specific effluent limitations are established for BOD5, TSS, COD, oil and grease, phenolic compounds (4AAP), ammonia, sulfide, total chromium, hexavalent chromium, and pH. These pollutants are limited under BPT, as well as BAT, and NSPS.

Tables VI-3 and VI-4 are summaries of priority pollutant detection results from the screening program for the intake water, and separator effluent, respectively, at direct discharge refineries.

Pollutants Excluded From Regulation (Direct Discharge Segment)

All of the organic and inorganic priority pollutants (except chromium) are excluded from regulation.

Those priority pollutants which were not detected in the final effluent of direct discharge refineries are listed in Table VI-5.

Priority pollutants which were detected in the final effluent of direct dischargers are listed in Table VI-6. Table VI-7 contains a statistical evaluation of the analytical data for these parameters. Average flow-weighted concentrations from Table VI-7 show low or trace concentrations for all priority pollutants except chromium (108 ppb). These pollutants are neither causing, nor likely to cause, toxic effects.

Two of the priority pollutants, methylene chloride and bis(2-ethylhexyl) phthalate, were detected in one or more of the treated effluent samples, however, their presence is believed to be the result of contamination in the field and laboratory. During sampling, polyvinyl chloride (Tygon) tubing was used. Phthalates are widely used as plasticizers to ensure that tubing (including tygon) remains soft and flexible. Methylene chloride was used as a solvent in the organic analytical procedure. The presence of these two pollutants, therefore, cannot be solely attributable to the refinery effluents.

SELECTION OF REGULATED POLLUTANTS FOR INDIRECT DISCHARGERS

Section 307(b) of the Act requires EPA to promulgate pretreatment standards for both existing and new sources which discharge their wastes into publicly owned treatment works (POTW). These pretreatment standards are designed to prevent the discharge of pollutants which pass through, interfere with, or are otherwise incompatible with the operation of POTW. In addition, the Clean Water Act of 1977 adds a new dimension to these standards by requiring pretreatment of pollutants, such as metals, that limit POTW sludge management alternatives.

The Settlement Agreement in Natural Resources Defense Council, Incorporated vs. Train, 8 ERC 2120 (D.D.C. 1976), modified, 12 ERC 1833, D.D.C. 1979, provides for the exclusion of particular pollutants from pretreatment standards, categories and subcategories (Paragraph 8), according to the criteria summarized below:

(1) if 95 percent or more of all point sources in the point source category or subcategory introduce only pollutants to POTW that do not interfere with, do not pass through, or are not otherwise incompatible with the POTW; or

(2) the toxicity and amount of the incompatible pollutants (taken together) introduced by such point sources into POTW is so insignificant as not to justify development of pretreatment standards; or

(3) criteria (1, 3, 4, 5, and 6) set forth in the above direct discharge segment discussion.

Pollutants Selected for Regulation in the Petroleum Refining Point Source Category (Indirect Discharge Segment)

Specific pretreatment standards are established for total chromium, ammonia, and oil and grease.

Pollutants Excluded From Regulation

With the exception of chromium, all organic and inorganic priority pollutants are excluded from regulation.

Those priority pollutants excluded because they were not detected are listed in Table VI-8.

Table VI-9 lists the priority pollutants which were detected in the effluents of indirect dischargers. Pollutants listed in Part I and Part II of Table VI-9 are excluded from national regulation in accordance with Paragraph 8 of the Settlement Agreement because either they were found to be susceptible to treatment by the POTW and do not interfere with, pass through, or are not otherwise incompatible with the POTW, or the toxicity and amount of incompatible pollutants are insignificant. Pollutants listed in Part III of Table VI-9 are excluded for several reasons. First, there is significant removal of several of these pollutants by the existing oil/water separation technology used to comply with the pretreatment standard for oil and grease. Second, there is significant removal of these pollutants by the POTW treatment processes by air stripping and biodegradation. Third, the amount and toxicity of these pollutants does not justify developing national pretreatment standards.

Table VI-10 contains a statistical evaluation of the occurrance and average flow weighted concentrations for those priority pollutants listed in Table VI-9.

ENVIRONMENTAL SIGNIFICANCE OF SELECTED POLLUTANTS

The environmental significance of the pollutants selected above is discussed here in the following groupings: a) toxic pollutants, b) conventional pollutants, and c) non-conventional pollutants.

Toxic Pollutants

The following "selected" pollutants are addressed here (under the grouping of toxics): lead, chromium, zinc, cyanide, and toluene.

Lead. Human exposure to lead has been shown to cause disturbances of blood chemistry, neurological damage, kidney damage, adverse reproductive effects, and adverse cardiovascular effects. Lead has also been shown to be carcinogenic and teratogenic in experimental animals.

The effects of lead on aquatic life have been extensively studied, particularly for freshwater species. As with other toxic metals, the toxicity of lead is strongly dependent on water hardness. LC_{50} values reported for freshwater fish in soft water are in the low mg/L range. Lead is chronically toxic in soft water at concentrations ranging from 19 to 174 µg/L for six species of freshwater fish. Lead is bioconcentrated by fish, invertebrates, algae, and bacteria.

Chromium. Although chromium is an essential nutrient in trace amounts, it can be quite toxic to man at high concentrations. Damage to the skin, respiratory tract, liver, and kidneys has resulted from occupational exposure to high levels of chromium. Epidemiological studies suggest that long term inhalation of chromium produces lung cancer.

Concentrations of chromium lethal to aquatic organisms vary considerably depending upon the chemical form of chromium, the water hardness, and the species or organism exposed. LC_{50} values reported for 21 species of fish range from 3,300 µg/L to 249,000 µg/L. LC_{50} values reported for 33 invertebrates range from 67 µg/L to 105,000 µg/L.

Cyanides. Cyanides are a diverse group of compounds defined as organic or inorganic compounds which contain the -CN group. Cyanides are rapidly lethal to humans in low doses but apparently do not exert sublethal or chronic toxic effects. Cyanides are acutely toxic to fish at concentrations as low as 57 µg/L and chronically toxic at concentrations as low as 7.8 µg/L.

Zinc. Zinc is an essential element required for normal human growth and development. Except at very high exposure levels, zinc is relatively non-toxic to humans. There is no evidence to suggest that zinc is carcinogenic, mutagenic, or teratogenic, although, based on tests with animals, there is one evidence that excessive amounts of zinc may promote tumor growth.

Although zinc is one of the most commonly occurring heavy metals in water, it can be toxic to aquatic life. Extensive toxicity testing with zinc has indicated a wide interspecific variation in zinc sensitivity. Acute 96-hour LC_{50} values reported for freshwater fish and invertebrates range from 0.040 mg/L to 103 mg/L.

Toluene. Neuromuscular deficiencies and menstrual disorders have been reported in women exposed chronically to toluene in the workplace. Acute exposure to high levels of toluene causes excessive central nervous system depression which can result in death.

Toluene has been shown to be acutely toxic to freshwater fish at concentrations ranging from 6.9 mg/L to 32.4 mg/L and to saltwater fish at concentrations ranging from 4.5 to 12 mg/L. A

single chronic value of 2.2 mg/L has been reported for saltwater fish.

Conventional Pollutants.

The environmental Significance of the conventional pollutants, biochemical oxygen demand, suspended solids, and oil and grease is discussed below.

Biochemical Oxygen Demand. Biochemical oxygen demand (BOD) is a measure of the oxygen consuming capabilities of organic matter. The BOD does not in itself cause direct harm to a water system, but it does exert an indirect effect by depressing the oxygen content of the water. Sewage and other organic effluents, during their processes of decomposition, exert a BOD, which can have a catastrophic effect on the ecosystem by depleting the oxygen supply. Conditions are reached frequently where all of the oxygen is used and the continuing decay process causes the production of noxious gases such as hydrogen sulfide and methane. Water with a high BOD indicates the presence of decomposing organic matter, and subsequent high bacterial counts that degrade its quality and potential uses.

Suspended Solids. Suspended solids include both organic and inorganic materials. The organic fraction includes such materials as grease, oil, tar, animal and vegetable fats, various fibers, sawdust, hair, and various materials from sewers. These solids may settle out rapidly, and bottom deposits are often a mixture of both organic and inorganic solids. They adversely affect fisheries by covering the bottom of the stream or lake with a blanket of material that destroys the fish-food, bottom fauna or the spawning ground of fish. Deposits containing organic materials may deplete bottom oxygen supplies and produce hydrogen sulfide, carbon dioxide, methane, and other noxious gases.

Solids may be suspended in water for a time, and then settle to the bed of the stream or lake. These settleable solids may be inert, slowly biodegradable materials, or rapidly decomposable substances. While in suspension, they increase the turbidity of the water, reduce light penetration, and impair the photosynthetic activity of aquatic plants.

Solids in suspension are aesthetically displeasing. When they settle to form sludge deposits on the stream or lake bed, they are often much more damaging to the life in water, and they retain the capacity to displease the senses. Solids, when transformed to sludge deposits, may do a variety of damaging things, including blanketing the stream or lake bed and thereby destroying the living spaces for those benthic organisms that would otherwise occupy the habitat. When of an organic and therefore decomposable nature, solids use a portion or all of the dissolved oxygen available in the area. Organic materials also

serve as a seemingly inexhaustible food source for sludgeworms and associated organisms.

Oil and Grease. In the petroleum refining industry, oils, greases, various other hydrocarbons and some inorganic compounds will be included in the freon extraction procedure. The majority of material removed by the procedure in a refinery wastewater will, in most instances, be of a hydrocarbon nature. These hydrocarbons, predominately oil and grease type compounds, contribute to COD, TOC, TOD, and usually BOD resulting in high test values. The oxygen demand potential of these freon extractables is only one of the detrimental effects exerted on water bodies by this class of compounds. Oil emulsions may adhere to the gills of fish or coat and destroy algae or other plankton. Deposition of oil in the bottom sediments can serve to inhibit normal benthic growths, thus interrupting the aquatic food chain. Soluble and emulsified materials ingested by fish may taint the flavor of the fish flesh. Water soluble components may exert toxic action on fish. The water insoluble hydrocarbons and free floating emulsified oils in a wastewater will affect stream ecology by interfering with oxygen transfer, by damaging the plumage and coats of water animals and fowls, and by contributing taste and toxicity problems. The effect of oil spills upon boats and shorelines and their production of oil slicks and iridescence upon the surface of waters is well known.

Non-conventional Pollutants.

The environmental significance of the following non-conventional pollutants: chemical oxygen demand, sulfides, total organic carbon, phenolics (4AAP), and ammonia is discussed below.

Chemical Oxygen Demand. Chemical oxygen demand (COD) provides a measure of the equivalent oxygen required to oxidize the materials present in a wastewater sample, under acid conditions with the aid of a strong chemical oxidant, such as potassium dichromate, and a catalyst (silver sulfate). One major advantage of the COD test is that the results are available normally in less than three hours. Thus, the COD test is a faster test by which to estimate the maximum oxygen demand a waste can exert on a stream. However, one major disadvantage is that the COD test does not differentiate between biodegradable and non-biodegradable organic material. In addition, the presence of inorganic reducing chemicals (sulfides, reducible metallic ions, etc.) and chlorides may interfere with the COD test.

Sulfides. In the petroleum refining industry, major sources of sulfide wastes are crude desalting, crude distillation and cracking processes. Sulfides cause corrosion, impair product quality and shorten the useful catalyst life. They are removed by caustic, diethanolamine (DEA), water or steam, or appear as sour condensate waters in these initial processing operations. Hydrotreating processes can be used to remove sulfides in the

feedstock. Most removed and recovered sulfide is burned to produce sulfuric acid or elemental sulfur.

When present in water, soluble sulfide salts can reduce pH, react with iron and other metals to cause black precipitates, cause odor problems, and can be toxic to aquatic life. The toxicity of solutions of sulfides to fish increases as the pH value is lowered. Sulfides also chemically react with dissolved oxygen present in water, thereby lowering dissolved oxygen levels.

Total Organic Carbon. Total organic carbon (TOC) is a measure of the amount of carbon in the organic material in a wastewater sample. The TOC analyzer withdraws a small volume of sample and thermally oxidizes it at 150 degrees C. The water vapor and carbon dioxide from the combusion chamber (where the water vapor is removed) is condensed and sent to an infrared analyzer, where the carbon dioxide is monitored. This carbon dioxide value corresponds to the total inorganic value. Another portion of the same sample is thermally oxidized at 950 degrees C, which converts all the carbonaceous material to carbon dioxide; this carbon dioxide value corresponds to the total carbon value. TOC is determined by subtracting the inorganic carbon (carbonates and water vapor) from the total carbon value.

Phenolic Compounds (4AAP). Phenols and phenolic compounds are found in wastewaters of the petroleum refinery, chemical and wood distillation industries. Phenolic compounds include phenol (commonly referred to as carbolic acid) plus a number of other compounds that contain the hydroxy derivatives of benzene and its condensed nuclei. EPA has identified a number of toxic materials from this family of compounds, nine of which have been designated priority pollutants.

Phenol in concentrated solutions is quite toxic to bacteria, and it has been widely used as a germicide and disinfectant. Many phenolic compounds are more toxic than pure phenol; their toxicity varies with the chemical combination and general nature of the total wastes in which they occur. The toxic effects of combinations of different phenolic compounds is cumulative.

Biological treatment systems have been found able to effectively treat relatively high concentrations of phenolic compounds using them as food without serious toxic effects. Experience has indicated that biological treatment systems may be acclimated to phenolic concentrations of 300 mg/L or more. However, protection of the biological treatment system against slug loads of phenol should be given careful consideration in the design. Slug loadings as low as 50 mg/L could be inhibitory to the biological population, especially if the biological system is not completely mixed.

Phenols in wastewater present the following two major problems:

1) At high concentrations, phenol acts as a bactericide.

2) At very low concentrations, when disinfected with chlorine, chlorophenols are formed, producing taste and odor problems.

Phenols and phenolic compounds are both acutely and chronically toxic to fish and other aquatic animals. Also, chlorophenols produce an unpleasant taste in fish flesh, destroying their recreational and commercial value.

It is necessary to control phenolic compounds in the raw water used to supply drinking water, as conventional treatment methods used by water supply facilities do not remove phenols. The ingestion of concentrated solutions of phenols will result in severe pain, renal irritation, shock, and possibly death.

The amino antipyrine method (4AAP) measures the presence of phenolic compounds in terms of the color effects caused when these materials react in the presence of potassium ferricyanide at a pH of 10 to form a stable reddish-brown colored antipyrine dye. Color response of phenolic materials with 4-amino-antipyrine is not the same for all compounds. Because phenolic type wastes usually contain a variety of phenols, it is not possible to duplicate a mixture of phenols to be used as a standard. For this reason phenol itself has been selected as a standard and any color produced by the reaction of other phenolic compounds is reported as phenol. This value will represent the minimum concentration of phenolic compounds present in the sample. It is not possible to distinguish between different phenolic compounds using this analytical method.

Results of the sampling data for direct discharge refineries (Table V-27) illustrates the concentrations of total phenols (as measured by the 4AAP method) versus concentrations of the individual phenolic compounds identified as priority pollutants and present in refinery wastewaters. While phenolic compounds were found in the effluents of 14 of 16 refineries at an average concentration of 16 ug/L, only one of the priority pollutant phenols was detected at a concentration at or below measureable limits of the analytical equipment.

<u>Ammonia</u>. Ammonia is commonly found in overhead condensates from distillation and cracking and from desalting. It is usually found combined with sulfide as an ammonium sulfide salt. Ammonia is a common product of the decomposition of organic matter. Dead and decaying aminals and plants along with human and animal body wastes account for much of the ammonia entering the aquatic ecosystem. Ammonia exists in its non-ionized form only at higher pH levels and is the most toxic in this state. The lower the pH, the more ionized ammonia is formed and its toxicity decreases. Ammonia, in the presence of dissolved oxygen, is converted to nitrate (NO_3) by nitrifying bacteria. Nitrite (NO_2), which is an intermediate product between ammonia and nitrate, sometimes

occurs in quantity when depressed oxygen conditions permit. Ammonia can exist in several other chemical combinations including ammonium chloride and other salts.

Nitrates are considered to be among the poisonous ingredients of mineralized waters, with potassium nitrate being more poisonous than sodium nitrate. Excess nitrates cause irritation of the mucous linings of the gastrointestinal tract and the bladder; the symptoms are diarrhea and diuresis, and drinking one liter of water containing 500 mg/L of nitrate can cause such symptoms.

In most natural water the pH range is such that ammonium ions (NH_4+) predominate. In alkaline waters, however, high concentrations of un-ionized ammonia in undissociated ammonium hydroxide increase the toxicity of ammonia solutions. In streams polluted with sewage, up to one half of the nitrogen in the sewage may be in the form of free ammonia, and sewage may carry up to 35 mg/L of total nitrogen. It has been shown that at a level of 1.0 mg/L un-ionized ammonia, the ability of hemoglobin to combine with oxygen is impaired and fish may suffocate. Evidence indicates that ammonia exerts a considerable toxic effect on all aquatic life within a range of less than 1.0 mg/L to 25 mg/L, depending on the pH and dissolved oxygen level present.

Ammonia can add to the problem of eutrophication by supplying nitrogen through its breakdown products. Some lakes in warmer climates, and others that are aging quickly are sometimes limited by the nitrogen available. Any increase will speed up the plant growth and decay process.

TABLE VI-1
(Ref. 168, page 22)

FLOW-WEIGHTED CONCENTRATIONS[1] AND LOADINGS FOR DIRECT DISCHARGERS IN THE PETROLEUM REFINING INDUSTRY

-Conventional Pollutants-

Pollutant	Pretreated Raw		Current/BPT	
	Conc. mg/L	Load kkg/yr	Conc. mg/L	Load kkg/yr
BOD	133.2	57405.4	13.5	5833.0
TSS	92.1	39691.8	26.1	11252.1
Oil and Grease	150.6	64909.6	17.1	7389.2
Total Loading		162006.8		24474.3

-Nonconventional Pollutants- 2

Pollutant	Pretreated Raw		Current/BPT	
	Conc. mg/L	Load kkg/yr	Conc. mg/L	Load kkg/yr
COD	442.7	190836.3	114.6	49422.2
Ammonia	14.1	6070.1	6.8	2941.3
TOC	112.2	48348.8	33.3	14342.5
Sulfides	5.2	2257.1	0.6	274.1
Total Phenols	22.5	9719.1	0.018	7.6
Total Loading		257231.4		66987.7

TABLE VI-1
(Ref. 168, page 22)

FLOW-WEIGHTED CONCENTRATIONS[1] AND LOADINGS FOR DIRECT DISCHARGERS IN THE PETROLEUM REFINING INDUSTRY
(continued)

Footnotes:

1 Pretreated Raw and Current/BPT concentrations were supplied by EGD on a plant-by-plant basis. The industry-wide Pretreated Raw direct and the Current indirect discharge concentrations were obtained by flow-weighting the data for the seventeen direct and the four indirect dischargers studied in this analysis. The plant-by-plant Current/BPT direct discharge concentrations were flow-weighted to determine the industry-wide concentrations. The BAT industry-wide concentrations were calculated using the Current/BPT concentrations and flow-weighting on a plant-by-plant basis, based on the adjusted BAT flows. The flow-weighted concentrations were derived by multiplying the average concentrations by the flow for each of the 17 refineries sampled. The sum of the products divided by the total flow of the refineries sampled results in a flow-weighted average concentration.

2 Nonconventional pollutant loadings are not presented for BAT because the BAT removal effectiveness for these pollutant parameters is unknown.

TABLE VI-2

FLOW-WEIGHTED CONCENTRATIONS[1] AND LOADINGS
FOR DIRECT DISCHARGERS IN THE
PETROLEUM REFINING INDUSTRY

-Toxic Pollutants- 2

Pollutant	Pretreated Raw Load kkg/yr	Current/ BPT Load kkg/yr	BAT[3] Option 1 Load kkg/yr	BAT[3] Option 2 Load kkg/yr	BAT[3] Rev.Option 1 Load kkg/yr	BAT[3] Rev.Option 2 Load kkg/yr
Total Toxic Loadings	3502.1	136.6	103.3	83.0	100.8	87.1

Footnotes:

1 Pretreated Raw and Current/BPT concentrations were supplied by EGD on a plant-by-plant basis. The industry-wide Pretreated Raw direct and the Current indirect discharge concentrations were obtained by flow-weighting the data for the seventeen direct and the four indirect dischargers studied in this analysis. The plant-by-plant Current/BPT direct discharge concentrations were flow-weighted to determine the industry-wide concentrations. The BAT industry-wide concentrations were calculated using the Current/BPT concentrations and flow-weighting on a plant-by-plant basis, based on the adjusted BAT flows. The flow-weighted concentrations were derived by multiplying the average concentrations by the flow for each of the 17 refineries sampled. The sum of the products divided by the total flow of the refineries sampled results in a flow-weighted average concentration.

2 The individual toxic pollutant concentrations are listed in Section 2.3.

3 Some of the pollutants have an increased BAT concentration above Current/BPT because of the plant-by-plant flow-weighting procedure.

TABLE VI-3
DIRECT DISCHARGE
INTAKE WATER PRIORITY POLLUTANTS' DETECTION
SUMMARY OF EPA SCREENING PROGRAM DATA

FRACTION	PAR. NO.	PARAMETER	UNITS	PLANTS SAMPLED	PLANTS DETECTING	TOTAL SAMPLES ANALYZED	TOTAL TIMES DETECTED
VOLATILES	2	ACROLEIN	UG/L	15	0	15	0
	3	ACRYLONITRILE	UG/L	15	0	15	0
	4	BENZENE	UG/L	15	1	15	1
	6	CARBON TETRACHLORIDE	UG/L	15	1	15	1
	7	CHLOROBENZENE	UG/L	15	0	15	0
	10	1,2-DICHLOROETHANE	UG/L	15	0	15	0
	11	1,1,1-TRICHLOROETHANE	UG/L	15	1	15	1
	13	1,1-DICHLOROETHANE	UG/L	15	0	15	0
	14	1,1,2-TRICHLOROETHANE	UG/L	15	0	15	0
	15	1,1,2,2-TETRACHLOROETHANE	UG/L	15	0	15	0
	16	CHLOROETHANE	UG/L	15	0	15	0
	17	BIS(CHLOROMETHYL) ETHER	UG/L	15	0	15	0
	19	2-CHLOROETHYL VINYL ETHER	UG/L	15	0	15	0
	23	CHLOROFORM	UG/L	15	3	15	3
	29	1,1-DICHLOROETHYLENE	UG/L	15	0	15	0
	30	1,2-TRANS-DICHLOROETHYLENE	UG/L	15	1	15	1
	32	1,2-DICHLOROPROPANE	UG/L	15	0	15	0
	33	1,3-DICHLOROPROPYLENE	UG/L	15	0	15	0
	38	ETHYLBENZENE	UG/L	15	0	15	0
	44	METHYLENE CHLORIDE	UG/L	15	10	15	10
	45	METHYL CHLORIDE	UG/L	15	0	15	0
	46	METHYL BROMIDE	UG/L	15	0	15	0
	47	BROMOFORM	UG/L	15	0	15	0
	48	DICHLOROBROMOMETHANE	UG/L	15	0	15	0
	49	TRICHLOROFLUOROMETHANE	UG/L	15	0	15	0
	50	DICHLORODIFLUOROMETHANE	UG/L	15	0	15	0
	51	CHLORODIBROMOMETHANE	UG/L	15	0	15	0
	85	TETRACHLOROETHYLENE	UG/L	15	1	15	1
	86	TOLUENE	UG/L	15	0	15	0
	87	TRICHLOROETHYLENE	UG/L	15	1	15	1
	88	VINYL CHLORIDE	UG/L	15	0	15	0
ACID EXTRACT	21	2,4,6-TRICHLOROPHENOL	UG/L	17	0	17	0
	22	PARACHLOROMETA CRESOL	UG/L	17	0	17	0
	24	2-CHLOROPHENOL	UG/L	17	0	17	0
	31	2,4-DICHLOROPHENOL	UG/L	17	0	17	0
	34	2,4-DIMETHYLPHENOL	UG/L	17	0	17	0
	57	2-NITROPHENOL	UG/L	17	0	17	0
	58	4-NITROPHENOL	UG/L	17	0	17	0
	59	2,4-DINITROPHENOL	UG/L	17	0	17	0
	60	4,6-DINITRO-O-CRESOL	UG/L	17	0	17	0
	64	PENTACHLOROPHENOL	UG/L	17	0	17	0
	65	PHENOL	UG/L	17	2	17	2
BASE-NEUTRALS	1	ACENAPHTHENE	UG/L	17	2	17	2
	5	BENZIDINE	UG/L	17	0	17	0
	8	1,2,4-TRICHLOROBENZENE	UG/L	17	0	17	0

Note: Laboratory analysis reported as less than a detection limit is considered not detected (value = 0) for this table.

L-LESS THAN; T-TRACE; N-D NOT DETECTED;

TABLE VI-3
DIRECT DISCHARGE
INTAKE WATER PRIORITY POLLUTANTS' DETECTION
SUMMARY OF EPA SCREENING PROGRAM DATA

FRACTION	PAR. NO.	PARAMETER	UNITS	PLANTS SAMPLED	PLANTS DETECTING	TOTAL SAMPLES ANALYZED	TOTAL TIMES DETECTED
BASE-NEUTRALS	9	HEXACHLOROBENZENE	UG/L	17	0	17	0
	12	HEXACHLOROETHANE	UG/L	17	0	17	0
	18	BIS(2-CHLOROETHYL) ETHER	UG/L	17	0	17	0
	20	2-CHLORONAPHTHALENE	UG/L	17	0	17	0
	25	1,2-DICHLOROBENZENE	UG/L	17	0	17	0
	26	1,3-DICHLOROBENZENE	UG/L	17	0	17	0
	27	1,4-DICHLOROBENZENE	UG/L	17	0	17	0
	28	3,3'-DICHLOROBENZIDINE	UG/L	17	0	17	0
	35	2,4-DINITROTOLUENE	UG/L	17	0	17	0
	36	2,6-DINITROTOLUENE	UG/L	17	0	17	0
	37	1,2-DIPHENYLHYDRAZINE	UG/L	17	0	17	0
	39	FLUORANTHENE	UG/L	17	2	17	2
	40	4-CHLOROPHENYL PHENYL ETHER	UG/L	17	0	17	0
	41	4-BROMOPHENYL PHENYL ETHER	UG/L	17	0	17	0
	42	BIS(2-CHLOROISOPROPYL) ETHER	UG/L	17	0	17	0
	43	BIS(2-CHLOROETHYOXY) METHANE	UG/L	17	0	17	0
	52	HEXACHLOROBUTADIENE	UG/L	17	0	17	0
	53	HEXACHLOROCYCLOPENTADIENE	UG/L	17	0	17	0
	54	ISOPHORONE	UG/L	17	0	17	0
	55	NAPHTHALENE	UG/L	17	2	17	2
	56	NITROBENZENE	UG/L	17	0	17	0
	61	N-NITROSODIMETHYLAMINE	UG/L	17	0	17	0
	62	N-NITROSODIPHENYLAMINE	UG/L	17	0	17	0
	63	N-NITROSODI-N-PROPYLAMINE	UG/L	17	0	17	0
	66	BIS(2-ETHYLHEXYL) PHTHALATE	UG/L	17	5	17	5
	67	BUTYL BENZYL PHTHALATE	UG/L	17	0	17	0
	68	DI-N-BUTYL PHTHALATE	UG/L	17	4	17	4
	69	DI-N-OCTYL PHTHALATE	UG/L	17	0	17	0
	70	DIETHYL PHTHALATE	UG/L	17	0	17	0
	71	DIMETHYL PHTHALATE	UG/L	17	1	17	1
	72	1,2-BENZANTHRACENE	UG/L	17	0	17	0
	73	BENZO (A)PYRENE	UG/L	17	1	17	1
	74	3,4-BENZOFLUORANTHENE	UG/L	17	0	17	0
	75	11,12-BENZOFLUORANTHENE	UG/L	17	0	17	0
	76	CHRYSENE	UG/L	17	1	17	1
	77	ACENAPHTHYLENE	UG/L	17	1	17	1
	78	ANTHRACENE	UG/L	17	0	17	0
	79	1,12-BENZOPERYLENE	UG/L	17	0	17	0
	80	FLUORENE	UG/L	17	1	17	1
	81	PHENANTHRENE	UG/L	17	2	17	2
	82	1,2;5,6-DIBENZANTHRACENE	UG/L	17	0	17	0
	83	INDENO(1,2,3-C,D) PYRENE	UG/L	17	0	17	0
	84	PYRENE	UG/L	17	2	17	2
PESTICIDES	89	ALDRIN	UG/L	17	0	17	0
	90	DIELDRIN	UG/L	17	0	17	0
	91	CHLORDANE	UG/L	17	1	17	1

Note: Laboratory analysis reported as less than a detection limit is considered not detected (value = 0) for this table.

L-LESS THAN; T-TRACE; N-D NOT DETECTED;

TABLE VI-3
DIRECT DISCHARGE
INTAKE WATER PRIORITY POLLUTANTS' DETECTION
SUMMARY OF EPA SCREENING PROGRAM DATA

FRACTION	PAR. NO.	PARAMETER	UNITS	PLANTS SAMPLED	PLANTS DETECTING	TOTAL SAMPLES ANALYZED	TOTAL TIMES DETECTED
PESTICIDES	92	4,4'-DDT	UG/L	17	0	17	0
	93	4,4'-DDE	UG/L	17	0	17	0
	94	4,4'-DDD	UG/L	17	0	17	0
	95	ALPHA-ENDOSULFAN	UG/L	17	0	17	0
	96	BETA-ENDOSULFAN	UG/L	17	0	17	0
	97	ENDOSULFAN SULFATE	UG/L	17	0	17	0
	98	ENDRIN	UG/L	17	0	17	0
	99	ENDRIN ALDEHYDE	UG/L	17	0	17	0
	100	HEPTACHLOR	UG/L	17	0	17	0
	101	HEPTACHLOR EPOXIDE	UG/L	17	0	17	0
	102	ALPHA-BHC	UG/L	17	0	17	0
	103	BETA-BHC	UG/L	17	0	17	0
	104	GAMMA-BHC	UG/L	17	0	17	0
	105	DELTA-BHC	UG/L	17	0	17	0
	106	PCB-1242	UG/L	17	1	17	1
	107	PCB-1254	UG/L	17	0	17	0
	108	PCB-1221	UG/L	17	0	17	0
	109	PCB-1232	UG/L	17	0	17	0
	110	PCB-1248	UG/L	17	0	17	0
	111	PCB-1260	UG/L	17	0	17	0
	112	PCB-1016	UG/L	17	0	17	0
	113	TOXAPHENE	UG/L	17	0	17	0
	129	TCDD	UG/L	17	0	17	0
METALS	114	ANTIMONY	UG/L	17	0	17	0
	115	ARSENIC	UG/L	17	4	18	5
	117	BERYLLIUM	UG/L	17	0	85	0
	118	CADMIUM	UG/L	17	4	85	4
	119	CHROMIUM	UG/L	17	15	85	34
	120	COPPER	UG/L	17	12	86	48
	121	CYANIDE	UG/L	17	3	52	4
	122	LEAD	UG/L	17	10	88	26
	123	MERCURY	UG/L	16	10	69	51
	124	NICKEL	UG/L	17	9	88	13
	125	SELENIUM	UG/L	17	6	23	10
	126	SILVER	UG/L	17	1	85	2
	127	THALLIUM	UG/L	17	0	34	0
	128	ZINC	UG/L	17	16	90	56
NON-CONV. METALS	148	HEX-CHROMIUM	UG/L	16	7	48	10
MISC.	167	PHENOLICS (4AAPO)	UG/L	17	9	48	17

Note: Laboratory analysis reported as less than a deduction limit is considered not detected (value = 0) for this table.

L-LESS THAN; T-TRACE; N-D NOT DETECTED;

TABLE VI-4
DIRECT DISCHARGE
SEPARATOR EFFLUENT PRIORITY POLLUTANTS' DETECTION
SUMMARY OF EPA SCREENING PROGRAM DATA

FRACTION	PAR. NO.	PARAMETER	UNITS	PLANTS SAMPLED	PLANTS DETECTING	TOTAL SAMPLES ANALYZED	TOTAL TIMES DETECTED
VOLATILES	2	ACROLEIN	UG/L	9	0	10	0
	3	ACRYLONITRILE	UG/L	9	0	10	0
	4	BENZENE	UG/L	9	8	10	9
	6	CARBON TETRACHLORIDE	UG/L	9	0	10	0
	7	CHLOROBENZENE	UG/L	9	0	10	0
	10	1,2-DICHLOROETHANE	UG/L	9	0	10	0
	11	1,1,1-TRICHLOROETHANE	UG/L	9	0	10	0
	13	1,1-DICHLOROETHANE	UG/L	9	0	10	0
	14	1,1,2-TRICHLOROETHANE	UG/L	9	0	10	0
	15	1,1,2,2-TETRACHLOROETHANE	UG/L	9	0	10	0
	16	CHLOROETHANE	UG/L	9	0	10	0
	17	BIS(CHLOROMETHYL) ETHER	UG/L	9	0	10	0
	19	2-CHLOROETHYL VINYL ETHER	UG/L	9	0	10	0
	23	CHLOROFORM	UG/L	9	5	10	6
	29	1,1-DICHLOROETHYLENE	UG/L	9	0	10	0
	30	1,2-TRANS-DICHLOROETHYLENE	UG/L	9	1	10	1
	32	1,2-DICHLOROPROPANE	UG/L	9	0	10	0
	33	1,3-DICHLOROPROPYLENE	UG/L	9	0	10	0
	38	ETHYLBENZENE	UG/L	9	6	10	7
	44	METHYLENE CHLORIDE	UG/L	9	8	10	9
	45	METHYL CHLORIDE	UG/L	9	0	10	0
	46	METHYL BROMIDE	UG/L	9	0	10	0
	47	BROMOFORM	UG/L	9	0	10	0
	48	DICHLOROBROMOMETHANE	UG/L	9	1	10	1
	49	TRICHLOROFLUOROMETHANE	UG/L	9	0	10	0
	50	DICHLORODIFLUOROMETHANE	UG/L	9	0	10	0
	51	CHLORODIBROMOMETHANE	UG/L	9	0	10	0
	85	TETRACHLOROETHYLENE	UG/L	9	1	10	1
	86	TOLUENE	UG/L	9	8	10	9
	87	TRICHLOROETHYLENE	UG/L	9	0	10	0
	88	VINYL CHLORIDE	UG/L	9	0	10	0
ACID EXTRACT	21	2,4,6-TRICHLOROPHENOL	UG/L	10	0	15	0
	22	PARACHLOROMETA CRESOL	UG/L	10	0	15	0
	24	2-CHLOROPHENOL	UG/L	10	0	15	0
	31	2,4-DICHLOROPHENOL	UG/L	10	0	15	0
	34	2,4-DIMETHYLPHENOL	UG/L	10	5	15	6
	57	2-NITROPHENOL	UG/L	10	1	15	1
	58	4-NITROPHENOL	UG/L	10	1	15	1
	59	2,4-DINITROPHENOL	UG/L	10	1	15	1
	60	4,6-DINITRO-O-CRESOL	UG/L	10	1	15	1
	64	PENTACHLOROPHENOL	UG/L	10	1	15	1
	65	PHENOL	UG/L	10	9	15	12
BASE-NEUTRALS	1	ACENAPHTHENE	UG/L	10	6	15	6
	5	BENZIDINE	UG/L	10	0	15	0
	8	1,2,4-TRICHLOROBENZENE	UG/L	10	0	15	0

Note: Laboratory analysis reported as less than a detection limit is considered not detected (value = 0) for this table.

L-LESS THAN; T-TRACE; N-D NOT DETECTED;

TABLE VI-4
DIRECT DISCHARGE
SEPARATOR EFFLUENT PRIORITY POLLUTANTS DETECTION
SUMMARY OF EPA SCREENING PROGRAM DATA

FRACTION	PAR. NO.	PARAMETER	UNITS	PLANTS SAMPLED	PLANTS DETECTING	TOTAL SAMPLES ANALYZED	TOTAL TIMES DETECTED
BASE-NEUTRALS	9	HEXACHLOROBENZENE	UG/L	10	0	15	0
	12	HEXACHLOROETHANE	UG/L	10	0	15	0
	18	BIS(2-CHLOROETHYL) ETHER	UG/L	10	0	15	0
	20	2-CHLORONAPHTHALENE	UG/L	10	0	15	0
	25	1,2-DICHLOROBENZENE	UG/L	10	0	15	0
	26	1,3-DICHLOROBENZENE	UG/L	10	0	15	0
	27	1,4-DICHLOROBENZENE	UG/L	10	0	15	0
	28	3,3'-DICHLOROBENZIDINE	UG/L	10	0	15	0
	35	2,4-DINITROTOLUENE	UG/L	10	0	15	0
	36	2,6-DINITROTOLUENE	UG/L	10	0	15	0
	37	1,2-DIPHENYLHYDRAZINE	UG/L	10	0	15	0
	39	FLUORANTHENE	UG/L	10	4	15	5
	40	4-CHLOROPHENYL PHENYL ETHER	UG/L	10	0	15	0
	41	4-BROMOPHENYL PHENYL ETHER	UG/L	10	0	15	0
	42	BIS(2-CHLOROISOPROPYL) ETHER	UG/L	10	0	15	0
	43	BIS(2-CHLOROETHYOXY) METHANE	UG/L	10	0	15	0
	52	HEXACHLOROBUTADIENE	UG/L	10	0	15	0
	53	HEXACHLOROCYCLOPENTADIENE	UG/L	10	0	15	0
	54	ISOPHORONE	UG/L	10	1	15	1
	55	NAPHTHALENE	UG/L	10	8	15	9
	56	NITROBENZENE	UG/L	10	0	15	0
	61	N-NITROSODIMETHYLAMINE	UG/L	10	0	15	0
	62	N-NITROSODIPHENYLAMINE	UG/L	10	0	15	0
	63	N-NITROSODI-N-PROPYLAMINE	UG/L	10	0	15	0
	66	BIS(2-ETHYLHEXYL) PHTHALATE	UG/L	10	4	15	7
	67	BUTYL BENZYL PHTHALATE	UG/L	10	0	15	0
	68	DI-N-BUTYL PHTHALATE	UG/L	10	1	15	1
	69	DI-N-OCTYL PHTHALATE	UG/L	10	0	15	0
	70	DIETHYL PHTHALATE	UG/L	10	1	15	1
	71	DIMETHYL PHTHALATE	UG/L	10	0	15	0
	72	1,2-BENZANTHRACENE	UG/L	10	0	15	0
	73	BENZO (A)PYRENE	UG/L	10	0	15	0
	74	3,4-BENZOFLUORANTHENE	UG/L	10	0	15	0
	75	11,12-BENZOFLUORANTHENE	UG/L	10	0	15	0
	76	CHRYSENE	UG/L	10	4	15	8
	77	ACENAPHTHYLENE	UG/L	10	3	15	3
	78	ANTHRACENE	UG/L	10	1	15	1
	79	1,12-BENZOPERYLENE	UG/L	10	0	15	0
	80	FLUORENE	UG/L	10	2	15	3
	81	PHENANTHRENE	UG/L	10	6	15	8
	82	1,2;5,6-DIBENZANTHRACENE	UG/L	10	0	15	0
	83	INDENO(1,2,3-C,D) PYRENE	UG/L	10	0	15	0
	84	PYRENE	UG/L	10	2	15	2
PESTICIDES	89	ALDRIN	UG/L	10	1	15	1
	90	DIELDRIN	UG/L	10	0	15	0
	91	CHLORDANE	UG/L	10	0	15	0

Note: Laboratory analysis reported as less than a detection limit is considered not detected (value = 0) for this table.

L-LESS THAN; T-TRACE; N-D NOT DETECTED;

TABLE VI-4
DIRECT DISCHARGE
SEPARATOR EFFLUENT PRIORITY POLLUTANTS' DETECTION
SUMMARY OF EPA SCREENING PROGRAM DATA

FRACTION	PAR. NO.	PARAMETER	UNITS	PLANTS SAMPLED	PLANTS DETECTING	TOTAL SAMPLES ANALYZED	TOTAL TIMES DETECTED
PESTICIDES	92	4,4'-DDT	UG/L	10	0	15	0
	93	4,4'-DDE	UG/L	10	1	15	1
	94	4,4'-DDD	UG/L	10	0	15	0
	95	ALPHA-ENDOSULFAN	UG/L	10	0	15	0
	96	BETA-ENDOSULFAN	UG/L	10	1	15	1
	97	ENDOSULFAN SULFATE	UG/L	10	0	15	0
	98	ENDRIN	UG/L	10	0	15	0
	99	ENDRIN ALDEHYDE	UG/L	10	0	15	0
	100	HEPTACHLOR	UG/L	10	0	15	0
	101	HEPTACHLOR EPOXIDE	UG/L	10	0	15	0
	102	ALPHA-BHC	UG/L	10	0	15	0
	103	BETA-BHC	UG/L	10	0	15	0
	104	GAMMA-BHC	UG/L	10	0	15	0
	105	DELTA-BHC	UG/L	10	1	15	1
	106	PCB-1242	UG/L	10	3	15	3
	107	PCB-1254	UG/L	10	0	15	0
	108	PCB-1221	UG/L	10	1	15	1
	109	PCB-1232	UG/L	10	2	15	2
	110	PCB-1248	UG/L	10	0	15	0
	111	PCB-1260	UG/L	10	0	15	0
	112	PCB-1016	UG/L	10	3	15	3
	113	TOXAPHENE	UG/L	10	0	15	0
	129	TCDD	UG/L	10	0	15	0
METALS	114	ANTIMONY	UG/L	10	2	15	2
	115	ARSENIC	UG/L	10	5	19	13
	117	BERYLLIUM	UG/L	10	1	75	1
	118	CADMIUM	UG/L	10	1	78	4
	119	CHROMIUM	UG/L	10	10	92	80
	120	COPPER	UG/L	10	8	79	61
	121	CYANIDE	UG/L	10	9	47	38
	122	LEAD	UG/L	10	7	81	39
	123	MERCURY	UG/L	10	7	80	61
	124	NICKEL	UG/L	10	7	78	17
	125	SELENIUM	UG/L	10	4	39	29
	126	SILVER	UG/L	10	1	75	3
	127	THALLIUM	UG/L	10	1	40	4
	128	ZINC	UG/L	10	10	100	89
NON-CONV. METALS	148	HEX-CHROMIUM	UG/L	9	6	42	22
MISC.	167	PHENOLICS (4AAPD)	UG/L	10	10	48	46

Note: Laboratory analysis reported as less than a detection limit is considered not detected (value = 0) for this table.

L-LESS THAN; T-TRACE; N-D NOT DETECTED;

TABLE VI-5

PRIORITY POLLUTANTS NOT DETECTED IN TREATED EFFLUENTS DISCHARGED DIRECTLY, AND EXCLUDED FROM REGULATION

Pursuant to Paragraph 8(a)(iii) of the Settlement Agreement, the following 98 priority pollutants are excluded from national regulation because they were not detected in effluents from BPT treatment systems by Section 304(h) analytical methods or other state-of-the-art methods:

EPA No.	Priority Pollutant	EPA No.	Priority Pollutant
2	acrolein	52	hexachlorobutadiene
3	acrylonitrile	53	hexachlorocyclopentadiene
5	benzidine	54	isophorone
6	carbon tetrachloride	55	naphthalene
7	chlorobenzene	56	nitrobenzene
8	1,2,4-trichlorobenzene	57	2-nitrophenol
9	hexachlorobenzene	58	4-nitrophenol
10	1,2-dichloroethane	59	2,4-dinitrophenol
11	1,1,1-trichloroethane	60	4,6-dinitro-o-cresol
12	hexachloroethane	61	N-nitrosodimethylamine
13	1,1-dichloroethane	62	N-nitrosodiphenylamine
14	1,1,2-trichloroethane	63	N-nitrosodi-n-propylamine
15	1,1,2,2-tetrachloroethane	64	pentachlorophenol
16	chloroethane	65	phenol
18	bis(2-chloroethyl)ether	67	butyl benzyl phthalate
19	2-chloroethylvinyl ether	69	di-n-octyl phthalate
20	2-chloronaphthalene	72	benzo(a)anthracene
21	2,4,6-trichlorophenol	74	3,4-benzofluoranthene
24	2-chlorophenol	75	benzo(k)fluoranthane
25	1,2-dichlorobenzene	77	acenaphthylene
26	1,3-dichlorobenzene	78	anthracene
27	1,4-dichlorobenzene	79	benzo(ghi)perylene
28	3,3'-dichlorobenzidine	80	fluorene
29	1,1-dichloroethylene	82	dibenzo(a,h)anthracene
30	1,2-trans-dichloroethylene	83	ideno(1,2,3-cd)pyrene
32	1,2-dichloropropane	85	tetrachloroethylene
33	1,3-dichloropropylene	87	trichloroethylene
34	2,4-dimethylphenol	88	vinyl chloride
35	2,4-dinitrotoluene	89	aldrin
36	2-6-dinitrotoluene	90	dieldrin
37	1,2-diphenylhydrazine	91	chlordane
38	ethylbenzene	92	4,4'-DDT
39	fluoranthene	93	4,4'-DDE
40	4-chlorophenyl phenyl ether	94	4,4'-DDD
41	4-bromophenyl phenyl ether	95	alpha-endosulfan
42	bis(2-chloroisopropyl) ether	96	beta-endosulfan
43	bis(2-chloroethoxy) methane	97	endosulfan sulfate
45	methyl chloride	98	endrin
46	methyl bromide	99	endrin aldehyde
47	bromoform	100	heptachlor
48	dichlorobromomethane	101	heptachlor epoxide
51	chlorodibromomethane	102	alpha-BHC

TABLE VI-5 (Cont'd)

EPA No.	Priority Pollutant	EPA No.	Priority Pollutant
103	beta-BHC	110	PCB-1248
104	gamma-BHC	111	PCB-1260
105	delta-BHC	112	PCB-1016
106	PCB-1242	113	toxaphene
107	PCB-1254	114	antimony (total)
108	PCB-1221	116	asbestos
109	PCB-1232	129	2,3,7,8-tetrachlorodibenzo-p-dioxin (TCDD)

TABLE VI-6

PRIORITY POLLUTANTS DETECTED IN TREATED EFFLUENTS DISCHARGED DIRECTLY, BUT EXCLUDED FROM REGULATION

I. Pursuant to Paragraph 8(a)(iii) of the Settlement Agreement, the following 25 priority pollutants are excluded from national regulation because they are already effectively controlled by technologies upon which other effluent limitations and guidelines are based:

EPA No.	Priority Pollutant	EPA No.	Priority Pollutant
1	acenaphthene	115	arsenic
4	benzene	117	beryllium
22	parachlorometacresol	118	cadmium
23	chloroform	120	copper
31	2,4-dichlorophenol	121	cyanide
68	di-n-butyl phthalate	122	lead
70	diethyl phthalate	123	mercury
71	dimethyl phthalate	124	nickel
73	benzo(a)pyrene	125	selenium
76	chrysene	126	silver
81	phenanthrene	127	thallium
84	pyrene	128	zinc
86	toluene		

II. Pursuant to Paragraph 8(a)(iii) of the Settlement Agreement, the following two priority pollutants are excluded from national regulation because their detection is believed to be attributed to laboratory analysis and sample contamination:

EPA No.	Priority Pollutant
44	methylene chloride
66	bis(2-ethylhexyl) phthalate

TABLE VI-7

Statistical Analysis Table for the Petroleum Refining Industry[1]
Direct Discharge - Current/BPT

Pollutant	Average Flow-Weighted Poll. Conc. (ug/l)	Maximum Pollutant Concentration (ug/l)	Frequency of Detection
Chloroform	3.1	66	2/17
Benzene	2.3	11	3/17
Toluene	10.1	35	1/17
2,4-Dichlorophenol[3]	0.2	10	1/17
p-chloro-m-cresol[3]	0.3	10	1/17
Dimethyl phthalate[3]	0.1	3	1/17
Diethyl phthalate	1.5	30	1/17
Di-n-butyl phthalate	0.04	10	2/17
Acenaphthene	1.1	6	1/17
Benzo(a)pyrene[3]	0.1	3	2/17
Chyrsene	0.02	1	2/17
Phenanthrene	0.2	1	1/17
Pyrene	0.1	7	1/17
Arsenic[2]	0.01	31	3/17
Beryllium	0.04	2	2/51
Cadmium[3]	0.25	20	3/53
Chromium (Trivalent)	107.8	1230	41/53
Chromium (Hexavalent)	7.7	110	8/48
Copper	9.8	199	26/50
Cyanide	45.5	320	26/39
Lead	5.2	113	10/54
Mercury	0.9	6	20/45
Nickel	3.4	74	13/55
Selenium	17.2	32	17/20
Silver[3]	0.04	4	1/47
Thallium[3]	3.2	12	5/14
Zinc	104.6	620	43/59

Footnote:

[1]All 129 priority pollutants were analyzed during the sampling of the Current/BPT wastestream. Thirteen organic pollutants and fourteen inorganic pollutants were detected. The Current/BPT concentrations were calculated by flow-weighting the data available for the seventeen direct dischargers sampled.

[2]Low values were not included, and were assumed to be not quantifiable. High values were not included because laboratory contamination was suspected; therefore, data were assumed to be invalid.

[3]The Current/BPT pollutant concentration is greater than in the Pretreated Raw wastestream because of the variability of the data during sampling.

TABLE VI-8

PRIORITY POLLUTANTS NOT DETECTED IN TREATED EFFLUENTS DISCHARGED TO POTW, AND EXCLUDED FROM REGULATION

Pursuant to Paragraph 8(a)(iii) of the Settlement Agreement, the following 75 priority pollutants are excluded from national regulation because they were not detected by Section 304(h) analytical methods or other state-of-the-art methods in effluents discharged to POTW:

EPA No.	Priority Pollutant	EPA No.	Priority Pollutant
3	acrylonitrile	62	N-nitrosodiphenylamine
5	benzidine	63	N-nitrosodi-n-propylamine
6	carbon tetrachloride	66	bis(2-ethylhexyl) phthalate
8	1,2,4-trichlorobenzene	69	d-n-octyl phthalate
9	hexachlorobenzene	71	dimethyl phthalate
12	hexachloroethane	74	3,4-benzofluoranthene
13	1,1-dichloroethane	75	benzo(k)fluoranthane
14	1,1,2-trichloroethane	79	benzo(ghi)perylene
15	1,1,2,2-tetrachloroethane	82	dibenzo(a,h)anthracene
16	chloroethane	83	ideno(1,2,3-C,D)pyrene
18	bis(2-chloroethyl)ether	87	trichloroethylene
19	2-chloroethylvinyl ether	88	vinyl chloride
20	2-chloronaphthalene	90	dieldrin
21	2,4,6-trichlorophenol	91	chlordane
22	parachlorometa cresol	94	4,4'-DDD
25	1,2-dichlorobenzene	95	alpha-endosulfan
26	1,3-dichlorobenzene	97	endosulfan sulfate
27	1,4-dichlorobenzene	98	endrin
28	3,3'-dichlorobenzidine	99	endrin aldehyde
29	1,1-dichloroethylene	100	heptachlor
31	2,4-dichlorophenol	101	heptachlor epoxide
32	1,2-dichloropropane	102	alpha-BHC
33	1,3-dichloropropylene	103	beta-BHC
35	2,4-dinitrotoluene	104	gamma-BHC (lindane)
36	2-6-dinitrotoluene	106	PCB-1242
37	1,3-diphenylhydrazine	107	PCP-1254
41	4-bromophenyl phenyl ether	108	PCB-1221
42	bis(2-chloroisopropyl) ether	109	PCB-1232
43	bis(2-chloroethoxy) methane	110	PCB-1248
44	methylene chloride	111	PCB-1260
45	methyl chloride	112	PCB-1016
46	methyl bromide	113	toxaphene
47	bromoform	114	antimony (total)
51	chlorodibromomethane	116	asbestos
52	hexachlorobutadiene	126	silver (total)
53	hexachlorocyclopentadiene	127	thallium (total)
56	nitrobenzene	129	2,3,7,8-tetrachloro-dibenzo-p-dioxin (TCDD)
61	N-nitrosodimethylamine		

TABLE VI-9

PRIORITY POLLUTANTS DETECTED IN EFFLUENTS DISCHARGED TO POTW, BUT EXCLUDED FROM REGULATION

I. Pursuant to Paragraph 8(b)(i) of the Settlement Agreement, the following 5 priority pollutants are excluded from regulation because 95 percent or more of all point sources in the subcategory introduce into POTW only pollutants which are susceptible to treatment by the POTW and which do not interfere with, do not pass through, or are not otherwise incompatible with such treatment works:

EPA No.	Priority Pollutant
24	2-chlorophenol
57	2-nitrophenol
77	acenaphthylene
80	fluorene
125	selenium

II. Pursuant to Paragraph 8(b)(ii) of the Settlement Agreement, the following 33 priority pollutants are excluded from regulation because the amount and toxicity of each pollutant do not justify developing national regulations:

EPA No.	Priority Pollutant	EPA No.	Priority Pollutant
2	acrolein	85	tetrachloroethylene
7	chlorobenzene	89	aldrin
10	1,2-dichloroethane	92	4,4'-DDT
11	1,1,1-trichloroethane	93	4,4'-DDE
23	chloroform	96	beta endosulfan
30	1,2-trans-dichloroethylene	105	delta BHC
39	fluoranthene	115	arsenic
40	4-chlorophenyl phenyl ether	117	beryllium
48	dichlorobromomethane	118	cadmium
60	4,6 dinitro-o-cresol	120	copper
64	pentachlorophenol	121	cyanide
67	butyl benzyl phthalate	122	lead
68	di-n-butyl phthalate	123	mercury
70	diethyl phethalate	124	nickel
72	benzo(a)anthracene	128	zinc
73	benzo(a)pyrene		
76	chrysene		
84	pyrene		

TABLE VI-9 (Cont'd)

III. Pursuant to Paragraphs 8(a)(iii), 8(a)(iv), and 8(b) of the Settlement Agreement, the following 12 priority pollutants are excluded from regulation for the following reasons. (1) There is significant removal of several of the pollutants by the technology upon which existing pretreatment standards for oil and grease are based. (2) There is significant removal of all these pollutants by the POTW treatment system. (3) The amount and toxicity of the pollutants do not justify developing national pretreatment standards.

EPA No.	Priority Pollutant	EPA No.	Priority Pollutant
1	acenaphthene	58	4-nitrophenol
4	benzene	59	2,4-dinitrophenol
34	2,4-dimethylphenol	65	phenol
38	ethylbenzene	78	anthracene
54	isophorone	81	phenanthrene
55	naphthalene	86	toluene

TABLE VI-10

Statistical Analysis Table for the Petroleum Refining Industry[1]
Indirect Discharge - Current

Pollutant	Average Flow-Weighted Poll. Conc. (ug/l)	Maximum Pollutant Concentration (ug/l)	Frequency of Detection
Acrolein	0.7	100	1/29
Aldrin	0.6	12	3/22
δ-BHC	0.6	12	2/27
DDE	0.4	7	1/27
DDT	0.01	5	1/28
β-Endosulfan	0.6	13	1/29
Isophorone	293.3	3550	3/27
Dichlorobromomethane	0.1	24	1/28
Chloroform	24.6	100	17/28
1,2-Dichloroethane	0.9	54	3/29
1,1,1-Trichloroethane	0.5	14	1/28
Trans-1,2-Dichloroethene	0.1	20	1/29
Tetrachloroethene	0.4	50	1/29
4-Chlorophenyphenyl ether	1.4	30	21/27
Benzene	148.8	5800	1/28
Chlorobenzene	0.1	31	17/27
Ethylbenzene	123.8	18000	20/27
Toluene	398.1	48000	20/27
Phenol	1368.7	33500	1/27
2-Chlorophenol	28.5	315	1/27
Pentachlorophenol	2.2	830	1/27
2-Nitrophenol	65.5	1350	1/29
4-Nitrophenol	561.4	5800	4/29
2,4-Dinitrophenol	1068.4	11000	3/29
2,4-Dimethylphenol	1207.7	18300	17/27
4,6-Dinitro-o-cresol	2.9	60	1/29
Diethyl phthalate	1.5	38	4/27
Di-n-butyl phthalate	0.1	40	1/27
Butyl benzyl phthalate	0.04	16	2/27
Acenaphthene	188.9	522	6/27
Acenaphthylene	81.5	665	4/27
Anthracene	119.2	1750	7/27
Benzo(a)anthracene	0.4	12	1/27

TABLE VI-10 (Continued)

Statistical Analysis Table for the Petroleum Refining Industry[1]
Indirect Discharge - Current
(Continued)

Pollutant	Average Flow-Weighted Poll. Conc. (ug/l)	Maximum Pollutant Concentration (ug/l)	Frequency of Detection
Benzo(a)pyrene	0.03	10	1/29
Chrysene	5.3	30	4/27
Fluoranthene	6.3	812	4/27
Fluorene	50.5	495	4/27
Naphthalene	581.6	3750	18/26
Phenanthrene	234.7	1750	15/27
Pyrene	4.6	16	5/27
Arsenic[2]	0.3	41	9/29
Beryllium	0.1	2	3/63
Cadmium	0.03	3	1/63
Chromium (Trivalent)	751.1	2196	58/71
Chromium (Hexavalent)	16.8	410	23/60
Copper	80.6	510	52/66
Cyanide	195.2	3000	55/56
Lead	24.6	958	21/66
Mercury	1.8	78	28/65
Nickel	14.6	771	6/66
Selenium	51.2	322	10/78
Zinc	429.4	3000	65/78

Footnote:

[1]All 129 priority pollutants were analyzed during the sampling of the Current wastestream. Forty organic pollutants and twelve inorganic pollutants were detected. The pollutant concentrations were obtained from flow-weighting the data for seventeen Pretreated Raw direct and the four Current Indirect dischargers studied in this analysis. PSES limits for toxic pollutants are assumed to remain at Current levels. There is no flow reduction at PSES.

[2]Low values were not included, and were assumed to be not quantifiable. High values were not included because laboratory contamination was suspected; therefore, data were assumed to be invalid.

SECTION VII

CONTROL AND TREATMENT TECHNOLOGY

INTRODUCTION

This section describes the control and treatment technologies that are determined to be feasible methods for the reduction of pollutants in petroleum refining wastewater. In identifying these technologies, the Agency assumed that each refinery had or would install the best practicable control technology currently available (BPCTCA) to comply with BPT limitations (3). The treatment technologies described below can further reduce the amount of pollutants discharged to navigable waters. They are divided into two broad classes: in-plant source control and end-of-pipe treatment. (A discussion of BPT technologies is also presented here for completeness). These two "classes" are discussed in the following paragraphs, along with a description of existing wastewater treatment and its effectiveness in the industry.

IN-PLANT SOURCE CONTROL

In-plant source control reduces the overall pollutant load that must be treated by an end-of-pipe system and reduces or eliminates a particular pollutant before it is diluted in the main wastewater stream.

In developing an in-plant control scheme, the source of each particular pollutant must be identified and evaluated as to whether it can be eliminated or reduced. Sampling the wastewater at various points within the refinery sewer, beginning at the end-of-pipe treatment system and ending at the process units, produces a profile of the refinery sewer, which shows the origin and flow path of the pollutant in question.

Once the source of the particular pollutant is identified, the next step is to determine if the pollutant can be (a) removed with an in-plant treatment system; (b) eliminated by chemical substitution; or (c) reduced by recycling or reusing the particular wastewater stream. In-plant source control is further discussed below in terms of treatment options, chemical substitution, wastewater reduction, and wastewater reuse.

In-Plant Treatment Options

In all in-plant treatment options, the process waste streams under consideration must be segregated. If a particular pollutant (or pollutants) has more than one source, they all require segregation from the main wastewater sewer. However, similar sources can be combined for treatment in one system. Sour water, for example is produced at various locations within a

refinery complex but can be treated as a combined wastewater stream.

Sour water and cooling tower blowdown are the two waste streams for which in-plant treatment is now practiced or is available.

Sour Water. Sour water generally results from water brought into direct contact with a hydrocarbon stream. Direct contact results when steam is used as a stripping or mixing medium or when water is used as a washing medium, as in the crude desalting unit. Sour water contains sulfides, ammonia, and phenols.

The most common in-plant treatment schemes for sour waters involve sour water stripping, sour water oxidizing, or combinations of the two. These systems can greatly reduce sulfides and ammonia levels, and can also remove some phenols (24). Table VII-1 summarizes the extent of this technology in the refining industry. The operation of sour water strippers and sour water oxidizers is discussed at great length in numerous technical publications (3, 6, 18, 20, 24, 28, 48). A sour water stripping study was undertaken in 1972 by the American Petroleum Institute (24). The results of this survey showed that 17 of 31 refluxed sour water strippers and 12 of 24 non-refluxed sour water strippers removed more than 99 percent of the sulfides. An additional nine refluxed and three non-refluxed units removed more than 99 percent of the sulfides and more than 95 percent of the ammonia. The data thus suggest that, overall, refluxed columns remove greater percentages of both pollutants. Note that of the five two-stage units studied, only one unit removed large percentages of both pollutants. Six of the seven strippers operating with flue or fuel gases removed over 99 percent of the sulfides. However, none of these units removed a high percentage of ammonia.

The average effluent concentration of all refluxed, non-refluxed, and flue gas units that removed more than 99 percent of the sulfide was 6.7 mg/L of sulfide. The average effluent from all units that removed more than 95 percent of the ammonia was 62.5 mg/L of ammonia. These averages are based upon a wide range of influent and effluent values.

Existing sour water stripper performance can be improved by (a) increasing the number of trays, (b) increasing the steam rate, (c) increasing tower height, and/or (d) adding a second column in series (107). All these methods are now available to the refining industry.

Biological treatment to remove total phenols is also a demonstrated technology in this industry (48). Biological treatment of stripped sour waters may prove cost-effective in removing any biodegradable organic priority pollutants that may originate in this waste stream.

Phenols can also be removed from the sour water waste stream by the addition of oxidizing agents, such as ozone (51), hydrogen peroxide (11), chlorine, chlorine dioxide, and potassium permanganate (113).

A recent research project demonstrated that activated carbon also removes phenolic compounds. The experiment showed that activated carbon has a high affinity for phenolic compounds, requiring relatively short detention times. Activated carbon treatment in sour water streams may also remove any other organic priority pollutants present. Refinery 237 uses activated carbon to treat the sour water waste stream, and the Agency has investigated this particular system further.

Cooling Tower Blowdown. Metals (such as chromium and zinc) and phosphate can be removed by precipitation and clarification at a relatively high pH (8 to 10). Hexavalent chromium, however, must be first reduced to the trivalent state before it can be precipitated and removed by clarification. Reduction is usually accomplished by adding sulfur dioxide, ferrous sulfate, or sodium bisulfite. The pH of the wastewater then rises with the addition of lime or caustic (lime is preferred if phosphates are to be precipitated), and the wastewater stream is clarified. Flocculants and flocculant aids, such as ferric chloride, alum, and polymers, can be added to increase removal efficiencies.

Japan's Mitsubishi Petrochemical Company has reported a new treatment technique for the removal of heavy metal ions (126). The system involves electrolytic coagulation in which electrical currents cause an iron electrode to dissolve. The iron combines with heavy metals and added hydroxide ion to form a sludge that can be precipitated rapidly from solution. Magnets aid the settling process. Mitsubishi reports that the new treatment system can reduce Cr^{+6} concentration to less than 0.05 ppm in 2900 gallons of metal plating wastewater. This system could be used to treat cooling tower blowdown streams at petroleum refineries.

Chemical Substitution

Chemicals are added to cooling tower recirculating water and boiler water to reduce corrosion, scaling, and biological growth. These chemicals usually include chromium, zinc, phosphates, and free chlorine.

Using organic chemicals to replace zinc and chromium solutions is also a viable alternative (53,54). Molybdates are also a practical alternative (55). (Molybdates are compounds containing the anion MO_4^{-2})

Wastewater Reduction

Reduction in water usage may sometimes be more cost-effective if the wastewater discharge is reduced, rather than reusing or recycling the existing amount of wastewater discharged. Good housekeeping is one inexpensive method of reducing wastewater and may include (a) shutting down pump gland cooling water lines on pumps that are out of service; (b) shutting down washdown hoses that are not in use, (c) eliminating leaks, (d) using dry cleaning methods, and (e) using vacuum trucks to clean up oil spills. Numerous other housekeeping procedures are commonly practiced throughout the industry.

Many new and modified refineries incorporate reduced water use and pollutant loading into their design. Some of these modifications include:

- Substitution of improved catalysts that require less regeneration.
- Replacement of barometric condensers with surface condensers or air fan coolers.
- Replacement of surface condensers with air fan coolers.
- Use of hydrocracking and hydrotreating processes that produce lower wastewater loadings than existing processes.
- Increased use of improved drying, sweetening, and finishing procedures to minimize spent caustics and acids, water washes, and filter solids requiring disposal.
- Recycle of wastewater at the process units to reduce the amount of wastewater leaving the process area.

A major process change that can reduce wastewater is the substitution of air cooling devices for water cooling systems. Many refineries have installed air cooling systems with their new process installations, thereby reducing the additional wastewater production associated with increased refinery complexity.

Of the 78 refineries for which comparative data are available between 1972 and 1976, the use of air cooling systems has increased at 39 refineries, has decreased at 26 refineries, and has remained the same at 13 refineries. Increased use of air cooling systems can reduce the quantity of cooling tower blowdown discharges that require treatment.

Another method of reducing wastewater is to eliminate cooling water from general purpose pumps (117). In certain instances the elimination of water can increase machinery reliability, reduce

capital expenditures for piping and water treatment facilities, and save operating costs. Guidelines are available for implementing a well-planned, step-by-step program of deleting cooling water from pumps and drivers. These procedures have been successfully implemented on a full-scale basis (117).

Wastewater Reuse

Many streams, such as treated sour waters, cooling tower blowdowns, and utility blowdowns, are suitable for use as wash water and fire system water. However, before reusing wastewater for these purposes, each plant must be investigated to determine the technical and economic feasibility.

Wastewaters emanating from end-of-pipe BPT facilities are generally of such quality that reuse can be quite attractive. Uses for treated refinery wastewaters include makeup water for cooling towers, pump gland cooling systems, washdown water, and fire water systems.

A number of articles in recent years describe actual reuse practices at one refinery (41, 57, 58). This plant reuses most of its treated wastewater as makeup to the cooling tower and fire water systems. In practice, the cooling towers act as biological treatment units, removing over 99 percent of the phenols present (41). The refinery reuses approximately 4.5 million gallons of process wastewater per day in the cooling towers; about 2.2 million gallons of cooling tower blowdown per day are sand filtered and discharged to the receiving stream. The difference, over 2 million gallons per day, is evaporated in the cooling towers or in an impounding basin (58). Wastewater reuse began at this refinery in 1954. Years of operating experience have confirmed that reuse water is a satisfactory makeup supply to cooling towers and does not require special water conditioning or treatment. Continued monitoring has confirmed that the system has no problems of corrosion, heat transfer, or cooling tower wood deterioration. Refinery management has concluded that cooling water reuse is an economically sound practice, paying significant dividends in terms of both pollution abatement and water conservation (57).

Finelt and Crump (128) report that refiners faced with increasing freshwater costs may direct their water management policies toward the recirculation of treated water. Properly treated wastewater can be recycled as makeup to the cooling tower system. At new refineries, the recycle system could be justified economically over a non-recycle system for a number of reasons. There are a number of factors to be considered, most notably the cost. The cost of fresh water primarily determines the least costly system. At existing well-operated facilities, only at very high freshwater costs can the recycle system prove to be less costly than a non-recycle system. However, application of

recycle technology can reduce effluent discharge by up to 90 percent.

The use of sour waters as makeup to the desalter is a proven technology in this industry. This practice does remove some phenol because the phenolics are extracted from the sour water while the crude is washed. However, the removal efficiency varies greatly, depending on a number of factors, and this treatment scheme may not be a practical alternative for some refineries (48). Certain crudes, particularly California crudes, may present problems in reusing sour waters in the desalter because they produce emulsions in the desalter effluent.

Table VII-2 identifies refineries with California crudes that recycle wastewater; the table also lists the percentage of California crudes that makeup crude capacity and the percentage of reused sour waters. These data show that refineries processing California crudes do not use large percentages of sour water in the desalter. In fact, refineries that use a large percentage of California crudes appear to reuse less sour water than refineries that process a small percentage of California crude. However, Table VII-3 shows that five of the six plants in this analysis do reuse sour water elsewhere in the refinery.

Sour water from stripper bottoms has other demonstrated uses in the petroleum refining industry (36). It can be reused as cooling tower makeup and as process wash water. In the biological environment in most cooling systems, 90 percent or more of the phenols present can be removed (36).

The 1977 Survey shows that 36 refineries reuse 100 percent of their treated sour waters in the desalter, while an additional 43 plants reuse at least some portion of their treated sour waters in the desalter. In addition, 32 refineries reuse treated sour waters in some other process. Of these plants, four reuse 100 percent of their treated sour waters as makeup to cooling towers. Table VII-3 summarizes the extent of industry reuse of treated sour waters.

The American Petroleum Institute published Water Reuse Studies in August 1977 (150). This document presents methods for achieving zero discharge, including:

- Recycle and reuse of treated effluent as well as other wastewaters
- Recovery and reuse of condensate streams
- Evaporation of wastewater with waste heat
- Use of brine concentrators to eliminate high TDS streams.

The API report concludes that for most existing refineries, "(1) engineering concepts are available which indicate complete reuse of refinery water is technically possible and (2) the capital and operating costs appear favorable for complete recycle . . . ."(150).

The recycle of treated effluent as cooling tower makeup or for other uses is certainly a viable treatment alternative. Significant reductions in wastewater generation can decrease the quantities of pollutants discharged to navigable waters. When refineries improve the present wastewater management system by minimizing cooling tower blowdown, the treated effluent to be recycled may require softening before recirculation.

To determine an upper limit of how much treated wastewater can be reused as cooling tower makeup, the amount of cooling tower makeup required by each plant in the industry is summarized in Table VII-4. The percentage of cooling tower makeup water in the total wastewater discharged is also shown. This table has been derived from the 1977 survey data base. Approximately half the facilities have a cooling tower makeup water requirement that equals or exceeds the total refinery discharge flow.

In order to determine the degree of flow reduction that can be achieved on a national basis, EPA developed a flow model. The objective of the model was to estimate the average wastewater discharge flow from refineries which use similar processes. The model established which refineries are discharging less flow than other facilities. The higher flow refineries may be subject to flow reduction requirements.

In the proposed revisions of December 1979, an industry average flow reduction of 52% was required. This reduction level was determined by selecting the medium performance of refineries which are discharging less then the model predicts. The flow model upon which the proposal was based was found to be statistically deficient. A refined flow model was developed (see Section IV).The overall flow reduction as calculated from the refined flow model is 37.5%. For the purpose of confirming the achievability of this flow level, a detailed engineering study was conducted at 15 refineries located throughout the United States. The results of this study showed that the 37.5% reduction on an industry wide basis is technically achievable (159). A summary of the techniques identified for reusing wastewaters and reducing discharge flow rates at the refineries studied is presented in Table VII-5.

END-OF-PIPE TREATMENT

End-of-pipe treatment is defined here as all wastewater treatment systems that follow an API separator or a similar oil/water separation unit. The following end-of-pipe treatment techniques are available for the reduction of pollutants in petroleum

refining wastewater: a) biological treatment, b) filtration, c) granular activated carbon, d) powdered activated carbon, e) cyanide removal, and f) metals removal. These techniques are discussed below, along with the carbon studies conducted by the EPA Kerr Lab, and ultimate disposal methods.

Biological Treatment

Biological treatment is the basic process by which most refineries meet existing BPT guidelines. Very large amounts of oxygen-demanding compounds (as measured by the BOD_5, COD, and TOC test methods) are removed at many refineries through the application of well-designed and well-operated biological treatment systems (146).

Many options are available to plants which would upgrade their present biological systems. These include compartmentalized oxidation ponds to provide preliminary mechanical aeration, revamping of aerated lagoon systems into activated sludge systems, and converting of standard activated sludge systems to pure oxygen systems. Other modifications can improve the operating efficiency of particular biological treatment units, but each plant must be investigated to determine the feasibility of such modification.

Rotating Biological Contactors (RBC's) have attracted widespread attention in the United States since 1969. RBC's generally consist of rows of plastic disks mounted on horizontal shafts that turn slowly keeping the disk about 40 percent immersed in a shallow tank containing wastewater (see Figure VII-1). The RBC is a combination fixed film reactor and mechanical aerator. The fixed film reactor is the disk upon which microorganisms attach themselves and grow. Mechanical aeration occurs during the portion of each rotation that a section of disk is above water level. Microorganisms produce a film on the surface of the disk which removes organic matter from the wastewater. Biodegradation of organic matter causes biomass to accumulate on the surface of each disk. Excess biomass is stripped and returned to the wastewater stream by the shearing action of water against rotating disks. Waste biomass is held in suspension by the mixing action of the disks, and carried out of the reactor for removal by a clarifier. Treatment efficiency can be improved by increasing the number of RBC's in series, and by temperature control, sludge recycle, and chemical addition.

RBC's have characteristics such as ability to sustain shock loads, modular expansion, and low power consumption which may be especially attractive for industrial application.

Full scale RBC installations treating refinery wastewaters have resulted in removal of oxygen demanding pollutants comparable to activated sludge and trickling filter systems (23, 172, 173). These refineries did not report removal effectiveness for

priority pollutants, however, they do report 4AAP phenol removals ranging from 42 percent to 97 percent. Data from the Regional Surveillance and Analysis program show one refinery using RBC's, Refinery 131, which achieved priority pollutant removals similar to the BPT systems studied in the 17 refinery B&R/RSKERL sampling program (158, Appendix B).

The sampling data presented in Section V indicate that biological treatment can remove organic priority pollutants to low levels (10-100 ug/L). These samples are from both industry and POTW and were collected and analyzed by EPA for this study.

Filtration

Filtration, utilized as a polishing step after biological treatment, is part of model BPT treatment (3). The survey results indicate that 27 of the 259 respondents use filtration as part of the existing treatment scheme, including plants that use filtration before biological treatment. Sixteen other refineries plan to install filtration systems in the near future. Table VII-6 lists those refineries that have, or are planning to install, rapid sand or dual media filtration systems. Filtration can improve effluent quality by removing suspended solids and associated BOD_5 and COD and by removing carryover metals that have already been precipitated and flocculated. Filtration can also improve overall treatment plant performance (130, 132, 133).

Use of filtration techniques to remove solids reduces the effluent variability of biological treatment systems. One study (30) showed that the percentage of suspended solids removed does not deteriorate with high feed content; in fact, the amount of solids removed often increases with feed concentration. Concentration of suspended solids in the effluent rose during these situations, but not in proportion to the feed increase. Thus, one conclusion of the report is that granular media filters may be used to clarify refinery wastewaters, including occasional surges.

Another study (99) showed that filtration of refinery effluent can reduce suspended solids to less than 5 mg/L for "all feed concentrations" (8 to 91 mg/L of TSS), further supporting the fact that filters can reduce the effluent variability of biological treatment systems.

One petroleum refining company uses rapid sand filtration to treat its biological treatment plant influent (150). Biological treatment systems now remove both suspended and dissolved materials. However if filtration is used before biological treatment to remove the suspended material not removed in primary treatment, the biological system can remove more dissolved organics and generate fewer solids (50). Another advantage of prefiltration is that it allows the biological system to operate at increased sludge ages (20 to over 40 days). With high sludge

ages, treatment efficiencies are greater and less sludge is generated with fewer system upsets.

Granular Activated Carbon

Granular activated carbon has been used in the potable water industry for many years; recently industrial and municipal wastewater treatment plants have used it to remove dissolved organics (49). Activated carbon systems have functioned both as polishing units following a biological treatment system and as the major treatment process in a physical/chemical treatment system.

The granular activated carbon system considered here consists of one or more trains of carbon columns, each train having three columns operated in series. The columns operate by rotating their positions in the train. The newly regenerated carbon would be in the third vessel, whereas the vessel with the most spent carbon would be the first vessel. One possible piping and equipment arrangement showing this scheme is presented in Figure VII-2. Smaller refineries may require only one or two vessels operated manually without the sophisticated piping arrangement shown in Figure VII-2.

EPA expects that all but the smallest systems will require on-site regeneration of carbon. Figure VII-3 is a flow diagram of one possible carbon regeneration system. In some instances, filtration may be needed before carbon adsorption to remove suspended solids and prevent plugging of the carbon pores.

Refinery 168 treats all wastewater with activated carbon. This refinery uses granular activated carbon as the main treatment process; that is, it uses no biological treatment system for organic and BOD removal before adsorption. The refinery has experienced operating problems with the system (many of which have been mechanical in nature) and now plans to install a biological treatment facility to replace the carbon system.

Powdered Activated Carbon

A new technology developed over the past several years consists of adding powdered activated carbon to biological treatment systems. The adsorbant quality of carbon, which has been known for many years, aids in the removal of organic materials in the biological treatment unit (144). This treatment technique also enhances color removal, clarification, and system stability, as well as BOD and COD removal (115, 116). Results of pilot testing (59, 60) indicate that this type of treatment, when used as a part of the activated sludge process, is a viable alternative to granular carbon systems.

One chemical manufacturing complex has installed a full-scale, 40 MGD powdered activated carbon system that started up during the

spring of 1977 (61). A simplified flow diagram is presented in Figure VII-4. The waste sludge, which contains powdered carbon, is removed from the activated sludge system and thickened in a gravity thickener. The sludge is then dewatered in a filter press before being fed to the regeneration furnace. The regenerated carbon is washed in an acid solution to remove metals as well as other inorganic materials. Fresh carbon is added as makeup to replace the carbon lost in the overflow from the activated sludge process or in the regeneration system.

The powdered activated carbon system just described is a very comprehensive treatment system and includes operations that not all installations may require. The decision to use a filter press system or acid cleaning system in addition to a carbon regeneration furnace should be made individually, since some refineries may not require every treatment step. If the metals content is low and most of the solids are settleable, the filter press or acid cleaning systems may not be required even by refineries that regenerate carbon onsite.

Several tests in which powdered activated carbon was added to petroleum refinery activated sludge systems were conducted. Rizzo reported on a plant test in which carbon was added to an extended aeration treatment at the Sun Oil Refinery in Corpus Christi, Texas (150). In this test, three carbon dosages, 24 ppm, 19 ppm, and 9 ppm, were tried. Test results showed that even the very small carbon dosages significantly improved BOD, COD, and TSS removals, as well as producing uniform effluent quality, a clearer effluent and eliminating foam.

Grieves et al. (153) reported on a pilot plant study at the Amoco refinery in Texas City where activated carbon was added to the activated sludge process in 37.9- liter (10- gallon) pilot plant aerators. Significant amounts of soluble organic carbon (53 percent), soluble COD (60 percent), NH_3-N (98 percent), and phenolics were removed after 50 mg/L of high surface area carbon was added. The amounts removed increased with increasing carbon dosage.

Exxon researchers tried adding activated carbon to bench scale activated sludge units with somewhat less success (154). They evaluated three carbon dosages, which produced aerator equilibrium carbon levels of 25 to 2,000 mg/L. At aerator carbon levels of 25 to 400 mg/L, the performance of the activated sludge process did not improve. This low dosage is usually an inadequate amount of carbon, which gets lost or overwhelmed in the system.

At higher carbon dosages, aerator carbon levels of 1,000 mg/L or more, Exxon got positive results. In a field test (scale undisclosed), Thibault et al. significantly improved effluent quality and noted improvement in shock loading resistance leading

to process stability. An additional 10 percent of TOC and COD was removed.

Another powdered activated carbon scheme that uses very high sludge ages (60 days or more) has been studied (60, 145). The high sludge ages allow carbon to accumulate to high concentrations in the mixed-liquor, even though only small makeup amounts are added to the system. This approach may eliminate the costly regeneration scheme previously described because of the low carbon addition rates and spent carbon may be disposed of with the sludge. Considerable pilot work has been done with this concept, but no full-scale system is currently operating.

Pilot tests (62) have also shown that powdered activated carbon can be used successfully with rotating biological contactors (RBCs). Refinery 32 has constructed a full-scale system on the basis of pilot test results.

Cyanide Removal

Various treatment technologies are available for the removal of cyanides. Cyanide can be removed by treatment with ferrous sulfate. This precipitates the cyanide as a ferrocyanide, which can be removed in a subsequent sedimentation step. For the coil coating industry, a long-term effluent concentration of 0.07 mg/L was achieved via this technology (169).

Chlorine oxidation is a common technique of cyanide treatment. Chlorine is used primarily as an oxidizing agent in industrial waste treatment to destroy cyanide. Chlorine can be used in the elemental or hypochlorite form. The two step chemical reaction is:

$$Cl2 + NaCN + 2NaOH = NaCNO + 2\ NaCl + H20 \qquad (2)$$

$$3Cl2 + 6NaOH + 2NaCNO = 2NaHCO3 + N2 + 6\ NaCl + 2H20 \qquad (2)$$

The long-term concentrations achieved by the metal plating and inorganic chemical industry (hydrogen cyanide subcategory) are 0.18 mg/L (171) and 0.21 mg/L, (170) respectively.

Cyanide can also be removed by steam stripping and biological treatment. Both of these technologies are currently being used by the petroleum refining industry. Steam stripping removes approximately 50% (See Table VII-6) of the cyanide, and biological treatment removes approximately 75%. The long-term concentration of cyanide being discharged by the petroleum refining industry after steam stripping and biological treatment is 0.16 mg/L.

Metals Removal

Metals such as copper, zinc, lead, arsenic, and cadmium may originate from many sources within a refinery, and may, in specific cases, require end-of-pipe treatment. The development document published in March 1974 for the copper, nickel, chromium, and zinc segment of the electroplating industry (114) considered chemical precipitation and clarification to be the best practicable treatment in that category. The best plants in that industry obtained the following long-term average effluent concentrations for selected metals:

o Copper (Cu)	0.2 mg/L
o Nickel (Ni)	0.5 mg/L
o Hexavalent Chromium (Cr^{+6})	0.055 mg/L
o Trivalent Chromium (Cr(T))	0.3 mg/L
o Zinc (Zn)	0.3 mg/L
o Cyanide (CN)	0.04 mg/L

The results of the RSKERL and Burns and Roe supplemental sampling programs (see Section V) show that BPT in the refining industry achieves metal discharges similar to or lower than the values shown; therefore, end-of-pipe chemical precipitation and clarification generally will not significantly improve the metals concentrations in petroleum refinery effluent over those achievable with existing BPT. Further reductions in the concentration of metals would require advanced wastewater treatment schemes, such as ion exchange, reverse osmosis, or activated carbon (147).

Since the chemical treatment scheme described earlier is applied as an in-plant measure, the actual discharge concentration of chromium may be lowered by dilution of the cooling tower blowdown in the final effluent stream.

A study was conducted to determine whether separate treatment of cooling tower blowdown prior to mixing with other refinery process wastewaters would be practical. Site visits were made to fifteen refineries and engineering analyses were performed to determine: (1) the feasibility of separating cooling tower blowdown and (2) the advantage of separate treatment. The findings of the study are: (1) not all cooling tower blowdown streams are collectable (especially for older refineries where sources of leaks cannot be found); and (2) some cooling tower blowdown is highly contaminated with oil. Therefore, cooling tower blowdown may still require biological treatment. The conclusion from the study is that a national regulation requiring separate treatment of cooling tower blowdown for existing refineries is not technically feasible.

RSKERL Carbon Studies

The Robert S. Kerr Environmental Research Laboratory (RSKERL) studied the implementation and effects of carbon treatment at six refineries as part of this study.

In the granular carbon tests, four columns were operated in parallel. Each column contained a different type of carbon so that differences in performance could be determined. One column contained previously exhausted and then regenerated carbon. The other three columns contained different types of virgin carbon. Using the isotherm testing method, the laboratory conducted field tests to determine which of the virgin carbons demonstrated the best performance. The effluents from the "best" virgin carbon and the "regenerated" carbon were then tested to evaluate removal capabilities. The inlet wastewater to the carbon columns was treated using multi-media filtration.

RSKERL also tested a powdered activated carbon system at four of the six refineries. The test unit consisted of a small activated sludge pilot unit to which powdered carbon was added on a batch basis.

Because of the limited testing period, the low concentration of toxic pollutants in the influent to the PAC system, and lack of repeated carbon exhaustion and regeneration, the data from these pilot tests are insufficient to determine removal effectiveness.

Ultimate Disposal Methods

The use of flow reduction and the recycle methods previously described will reduce the quantity of water discharged or that needing end-of-pipe treatment. None of the techniques discussed will eliminate the discharge of water. Zero discharge of water is technically achievable. 55 existing refineries have reported zero discharge. Table VII-7 presents information on the capacities and disposal methods used by these 55 refineries. Of the 55 plants, 32 use evaporation or percolation ponds, 10 use disposal wells, 5 use contract disposal, 2 use leaching beds, 1 uses surface spray, and 6 reported no wastewater generation at all.

To highlight the geographical and process distribution of the zero dischargers, the following breakdown is provided:

Distribution by EPA Region

Region	Number of Refineries
1	1
2	0
3	0
4	1
5	1
6	20
7	2
8	14
9	14
10	2
Total	55

Distribution by BPT Subcategory

Subcategory	Number of Refineries
A	34
B	15
C	1
D	2
E	0
Not Classified	3
Total	55

Percolation and evaporation ponds are attractive disposal methods when evaporation losses exceed rainfall. These ponds are sized according to the annual flow so that the inflow, plus the incidentally added water such as rainfall, equals percolation and evaporation losses. Many U.S. petroleum refineries now use this sizing technique.

The petroleum refining industry also practices deep-well injection. This method can be used only if extensive studies are conducted to ensure environmental protection.

Irrigation or other similar land disposal techniques is a viable end-of-pipe treatment alternative. This can eliminate discharge of all or a portion of process wastewaters to navigable streams. Refinery 26 already uses this or a similar technology.

Deep-well injection and irrigation or similar disposal methods are viable treatment alternatives. However, their application depends largely on the amount of rainfall, availability of a suitable deep-well, availability of land, and/or availability of land suitable for irrigation. Plants that are not located in an area with these conditions can also achieve zero discharge. The zero discharge technology for these plants is based on forced (vapor compression) evaporation. (Table VII-8 is a listing of steam electric power plants which use vapor compression evaporation as part of their wastewater treatment system). Heat is used to evaporate the water. The steam is condensed and reused as makeup water to the refinery while the brine (slurry) stream is transformed into a solid state in a flash dryer. This zero discharge treatment scheme is described in detail in the 1977 American Petroleum Institute Report (150).

EXISTING TECHNOLOGY

Existing BPT guidelines are based on: (a) end-of-pipe treatment systems consisting of biological treatment followed by rapid sand or multi-media filtration or an equivalent polishing step, and (b) in-plant control practices widely used within the petroleum refining industry that include the following:

o Installation of sour water strippers to reduce the sulfide and ammonia concentrations entering the treatment plant.

o Elimination of once-through barometric condenser water by using surface condensers or recycle systems with oily-water cooling towers.

o Segregation of sewers so that unpolluted storm runoff and once-through cooling waters are not normally treated with the process and other polluted waters.

o Elimination of polluted once-through cooling water by monitoring and repairing surface condensers or by using wet and dry recycle systems.

The National Commission on Water Quality received a contractor's report prepared in 1975 on the petroleum refining industry. The report included a status of the treatment technology and water usage of most of the refineries in the United States (65). The data were obtained for 1973 and present a picture of the industry as it appeared at the time the BPT limitations were promulgated.

Data in the 1977 EPA Petroleum Refining Industry Survey (1977 Survey) reflect conditions during 1976. Table VII-9 presents a comparison of the industry's wastewater treatment practices for 1973 (National Commission Data) and 1976 (1977 survey). The following list explains the abbreviated treatment processes in Table VII-9:

(Corr. Plat Sep.)	Corrugated Plate Separator
(DAF)	Dissolved Air Flotation
(OAF)	Other Air Flotation Systems
(Chemical Floc.)	Chemical Flocculation
-	Prefiltration
(Stab. Pond)	Stabilization Pond
(Aerated Lag.)	Aerated Lagoon
(Act. Sludge)	Activated Sludge
(Trick. Filter)	Trickling Filter
(RBC)	Rotating Biological Contactor
(Other Org. Rem.)	Other Organics Removal
-	Filtration
(Pol. Pond)	Polishing Pond
(Act. Carbon)	Activated Carbon Adsorption
(Evap. or Perc. Pond)	Evaporation or Percolation Pond

Table VII-10 summarizes the treatment systems listed in Table VII-9, showing the progress made by the industry in installing end-of-pipe treatment technology. The treatment units shown in these tables do not necessarily treat all of a particular refinery's wastewaters, and many treatment schemes may be pretreatment systems for discharge to a POTW.

The word "none" where indicated in Table VII-9 refers to refineries that do not have any of the treatment operations considered in this analysis. However, these plants may treat their wastewaters using gravity oil separation techniques.

A definitive list of refineries that have filtration or activated carbon operations is significant. Refineries that included filtration or activated carbon in their responses to the 1977 survey were screened to eliminate those systems that are treating only a minor portion of their wastewater, such as stormwater runoff or boiler blowdown. This approach reduced the total number of refineries listed as having these types of treatment to just those plants that treat a significant portion of their wastewater using this technology.

Table VII-10 shows that in 1976 the number of refineries having BPT in place markedly increased from the number in 1973. The number of pretreatment operations, such as DAF, OAF and chemical flocculation also significantly increased, indicating the importance of these unit operations in meeting BPT limitations.

Table VII-9 also presents data on water usage, including once-through cooling water, during the two 1-year periods surveyed. The comparison is based on water usage, rather than wastewater production, because data on wastewater production were not available for 1973. Those refineries for which data were available for both survey years, had reduced the overall flow by approximately 16 percent. This percentage would undoubtedly have been greater if market conditions had remained constant. However, many refineries expanded their operations or increased their complexity by adding additional process units between 1973 and 1976; these additions would minimize the effect of water reduction on a unit basis.

Effluent Concentration

The effluent concentration achievable by BPT treatment is discussed in the 1974 development document. The sampling results from the 17 screening plants agree with the original findings. The concentrations and variability factors used in the BPT limitations are given below:

	Concentration mg/L	Variability Factors daily	monthly
Phenol	0.1	3.5	1.7
Chromium (total)	0.25	2.9	1.7
Chromium (hexavalent)	0.02	3.1	1.4
BOD5	15.0	3.2	1.7
TSS	10.0	3.3	2.1
O&G	5.0	3.0	1.6

The 1974 development document concluded that the influent concentrations do not affect the effluent quality of the BPT wastewater treatment system. Screening sampling results support this conclusion.

Table VII-11 presents a detailed summary of the discharge data from 17 sampled plants, including the percentage of actual discharge flow to BPT model flow and effluent concentrations for BOD, TSS, TOC, and oil and grease. The table also presents an analysis of the correlations among these factors. These data show that there is no significant correlation between percentages of actual flow to BPT flow and final effluent concentrations after BPT treatment.

A study was conducted to further examine the relationship between flow and concentration. Effluent flow and concentration data from fifty refineries were compiled. The data were analyzed to determine whether a statistically significant correlation exists between concentration and discharge flow (in relationship to the flow model prediction). The results of this study support the assessment that refineries with low discharge flow (in relation to the model prediction) do not have higher effluent concentrations than refineries with higher discharge flow. The data from the fifty refineries were also analyzed to determine the level of phenols (4AAP) achievable. The result indicated that the 19 ppb long-term average concentration (a value used in the proposed regulation of December 1979) is too low and that the BPT long-term concentration of 100 ppb is appropriate.

Effluent information was also evaluated to determine the appropriateness of the BPT concentrations for BOD_5, TSS, oil and grease, and chromium (total). The result indicates that the 30-day concentrations from the new data closely approximate that of BPT (See Table VII-12). The daily maximum concentrations, however, are higher than the BPT values for TSS, BOD_5, and phenols. It should be noted that most of the refineries in this study have flows that are significantly lower than the BPT model prediction. If significant flow reduction is required, the concentrations in Table VII-13 would probably be more appropriate than the BPT values. Long-term pollutant reduction would be achieved by flow reductions, but higher daily maximum concentrations should be permitted because of higher variability.

TABLE VII-1

SOUR WATER TREATMENT
IN PETROLEUM REFINERIES

REFINERY NUMBER	SINGLE STAGE STRIPPING	TWO STAGE STRIPPING	OXIDIZING	OTHER
1	X			
2				X
3			X	
8				X
10				X
13	X		X	
15	X			
16	X			
18	X			
20	X			
24			X	
25	X		X	
29	X		X	X
30	X			
31				X
32	X			
33	X		X	
36			X	
37	X			
38	X		X	X
39	X			
40	X	X	X	
41	X	X	X	
42			X	
43	X		X	
45	X			
46	X		X	
49	X			
50		X		
51	X	X		
53				X
55	X			
56			X	X
57				X
59	X			
60		X		
61	X			
62	X			
63	X			X
64	X			
65	X			
67	X			
68	X			
70			X	
71	X			
72			X	
73	X			
74	X			
76	X			
77	X			
78			X	
80	X			
81	X			
83	X	X		

TABLE VII - 1

REFINERY NUMBER	SINGLE STAGE STRIPPING	TWO STAGE STRIPPING	OXIDIZING	OTHER
84	X			
85	X			
86	X			
87				X
88				X
94	X			
96	X			
98	X			
102	X			
103			X	
104				X
105				X
106				X
107			X	
108		X		
109				X
111	X			
112				X
113	X			X
114	X		X	
115	X			
116		X		
117	X			
121	X		X	X
122	X			
124	X			
125	X			
126	X			
127	X			
129			X	X
130	X			
131	X			
132	X			
133	X		X	
134	X			
139				X
142	X			
143	X			X
144	X			
147	X			
149		X		X
150		X		
151	X			
152	X			
153	X			
156	X			
157	X			
158	X			
159	X			
160	X			
161		X		
162	X			
163	X			
165	X			

REFINERY NUMBER	SINGLE STAGE STRIPPING	TWO STAGE STRIPPING	OXIDIZING	OTHER
166	X			
167	X			
168	X			
169		X		
174				X
175	X			
176				X
179	X			
180	X			
182	X			
183	X			
184	X			
185	X			
186		X		
187	X			
188	X			
190			X	
194	X			
195	X			
196	X	X		
197				X
200	X			
203		X		
204		X		
205	X			
208	X	X		
209	X			
210			X	
211	X			
212	X			
213				X
216	X		X	
221	X			
222	X			
224	X			
225	X			
226	X			
227	X			
228	X			
230	X			
232	X		X	
233	X			
234	X			
235	X			
237				X
238	X	X	X	
241	X			
243	X			
245	X			
246	X			
252	X			
255	X		X	X
256	X			
257	X			

TABLE VII - 1

REFINERY NUMBER	SINGLE STAGE STRIPPING	TWO STAGE STRIPPING	OXIDIZING	OTHER
258	X			
259	X			
261	X			
265	X			
309	X			

TABLE VII-2

EFFECT OF CALIFORNIA CRUDES ON REUSE OF SOUR WATERS

Ref. No.	State	Crude Source	Percentage of Crude Capacity	Percentage of Sour Water to Desalter
13	CA	L.A. Basin	17	26
32	CA	California	49	12.5
37	CA	San Joaquin Val, CA	39.6	17
		Coalinga, CA	23.0	
38	CA	California	28.1	30
		California	20.2	
		California	15.7	
		California	1.2	
40	CA	California	20	60
		California	10	
41	CA	CA Midway Waxy	35	25
		CA Mid Spec.	10	

TABLE VII-3

Refinery	Percentage of Reuse in Desalter	Percentage of Other Reuse
2	100.00	0.0
13	26.00	13.00
20	0.0	29.10
24	100.00	0.0
29	0.0	30.00
30	0.0	UNKNOWN
32	12.50	18.90
37	17.00	17.00
38	UNKNOWN	0.0
40	60.00	22.00
41	25.00	27.00
49	100.00	0.0
51	10.00	20.00
52	UNKNOWN	0.0
53	0.0	100.00
55	100.00	0.0
57	0.0	28.50
59	90.00	10.00
60	48.00	15.00
61	51.00	10.00
62	70.00	0.0
65	55.60	25.40
67	100.00	0.0
68	74.00	26.00
71	100.00	0.0
72	0.0	59.00
73	0.0	100.00
76	100.00	0.0
80	0.0	100.00
81	97.00	0.0
83	100.00	0.0
85	59.00	0.0
86	100.00	0.0
94	100.00	0.0
98	88.00	12.00
104	10.00	0.0
111	UNKNOWN	0.0
114	60.00	0.0
115	85.30	0.0
116	60.00	0.0
121	0.0	9.00
122	58.00	0.0
126	0.0	30.00
130	30.00	0.0
131	62.00	28.00
132	0.0	6.00
142	100.00	0.0
143	100.00	0.0
144	100.00	0.0
145	0.0	100.00
147	100.00	0.0
149	100.00	0.0
150	100.00	0.0
151	95.00	0.0

TABLE VII-3

Refinery	Percentage of Reuse in Desalter	Percentage of Other Reuse
153	20.00	80.00
155	35.00	0.0
156	50.00	50.00
157	0.0	8.20
159	50.00	0.0
160	100.00	0.0
161	90.00	10.00
163	100.00	0.0
165	100.00	0.0
169	87.00	0.0
179	100.00	0.0
182	0.0	15.00
183	100.00	0.0
184	66.00	0.0
186	80.00	0.0
187	100.00	0.0
188	73.00	27.00
194	80.00	0.0
196	40.00	0.0
200	100.00	0.0
203	40.00	0.0
204	100.00	0.0
205	100.00	0.0
209	100.00	0.0
211	100.00	0.0
216	18.00	0.0
224	100.00	0.0
225	100.00	0.0
227	75.00	25.00
228	100.00	0.0
230	100.00	0.0
232	60.00	40.00
233	50.00	0.0
234	UNKNOWN	0.0
241	85.00	0.0
243	99.99	0.0
252	80.00	0.0
256	100.00	0.0
257	100.00	0.0
258	100.00	0.0
259	100.00	0.0
265	100.00	0.0
305	20.00	80.00

TABLE SECTION VII-4
COOLING TOWER MAKEUP FLOW RATES
IN THE PETROLEUM REFINING INDUSTRY

Refinery	Makeup Flow (MGD)	Makeup Flow Divided By Total Effluent Flow	Percentage Of Cooling By BTU By Cooling Towers
1	0.059600	0.313684	94.0000
2	0.114800	2.125925	100.0000
3	0.0	0.0	100.0000
4	NOT APP.	NOT APP.	0.0
6	NOT APP.	NOT APP.	0.0
7	0.107000	0.648485	70.1000
8	0.010000	2.000000	30.0000
9	0.025000	0.694444	UNKNOWN
10	0.020000	0.400000	UNKNOWN
11	2.909999	1.939999	94.0000
12	0.500000	0.723589	UNKNOWN
13	7.303997	1.446336	95.0000
13	7.303997	1.446336	31.5000
15	0.084500	0.554099	100.0000
16	0.382100	1.179320	72.0000
17	0.018500	0.557229	40.0000
18	0.108000	0.473684	UNKNOWN
19	0.013000	3.037382	100.0000
20	1.450000	0.759162	30.0000
21	0.298000	4.382351	UNKNOWN
22	0.094500	1.049999	73.0000
23	NOT APP.	NOT APP.	0.0
24	0.350000	1.166666	15.0000
25	0.867000	1.791321	58.0000
26	0.297000	1.993288	79.0000
29	3.419997	0.914438	75.0000
30	0.193000	0.814277	100.0000
31	> 0.0	> 0.0	UNKNOWN
32	4.969995	0.842372	76.8000
33	0.650000	1.633164	100.0000
35	NOT APP.	NOT APP.	0.0
36	0.036000	1.090908	98.5000
37	6.808996	2.885168	43.0000
38	3.290996	1.073734	80.0000
39	0.165000	1.092714	UNKNOWN
40	6.614997	0.848076	90.0000
41	6.621992	0.705969	4.5000
42	0.030000	0.874126	UNKNOWN
43	3.769996	1.314045	62.9000
44	0.0	0.0	95.0000
45	> 4.348996	> 1.363321	53.6000
46	1.462999	1.116793	50.0000
48	0.140500	0.231848	95.0000
49	0.650000	UNKNOWN	65.0000
50	> 0.235000	> 1.525973	80.0000
51	NOT APP.	NOT APP.	0.0
52	NOT APP.	NOT APP.	0.0
53	0.050000	0.200000	98.0000
54	0.030000	1.764706	100.0000
55	NOT APP.	NOT APP.	0.0
56	1.600000	1.225115	81.0000
57	9.699997	0.941747	89.0000
58	1.514149	1.058845	99.0000
59	1.825500	1.659544	47.8000

TABLE SECTION VII-4

COOLING TOWER MAKEUP FLOW RATES
IN THE PETROLEUM REFINING INDUSTRY

Refinery	Makeup Flow (MGD)	Makeup Flow Divided By Total Effluent Flow	Percentage Of Cooling By BTU By Cooling Towers
60	3.052498	1.568117	60.0000
61	4.599999	1.742423	47.0000
62	5.659997	1.179166	74.0000
63	1.355000	0.496337	91.4100
64	4.308998	0.897708	66.0000
65	2.484499	0.690139	40.0000
66	0.000050	UNKNOWN	100.0000
67	8.829994	0.416706	65.6000
68	8.348999	1.717900	74.4000
70	0.0	0.0	UNKNOWN
71	0.359000	1.486542	100.0000
72	0.021000	0.138158	10.0000
73	0.468000	0.605433	75.0000
74	0.471500	2.357499	95.0000
76	1.933998	0.848245	86.5000
77	0.630000	2.282607	59.0000
78	0.075500	0.111029	90.0000
79	0.0	UNKNOWN	UNKNOWN
80	2.129998	9.260860	85.4000
81	0.776500	0.641735	100.0000
82	0.216000	0.375000	100.0000
83	2.929999	1.197873	60.0000
84	2.204995	1.304730	75.0000
85	5.394799	1.639756	80.0000
86	0.440950	1.274422	97.0000
87	NOT APP.	NOT APP.	0.0
88	0.735000	3.223682	89.2000
89	0.0	0.0	28.0000
90	0.017000	0.377778	60.0000
91	0.005000	0.416667	UNKNOWN
92	> 6.552999	> 0.587186	56.0000
93	0.0	0.0	UNKNOWN
94	1.728000	0.941176	86.5000
95	0.0	0.0	100.0000
96	19.014984	1.605995	100.0000
97	0.014040	UNKNOWN	UNKNOWN
98	4.289999	1.656370	39.4000
99	NOT APP.	NOT APP.	0.0
100	NOT APP.	NOT APP.	0.0
102	0.0	0.0	0.9000
103	> 0.025000	> 0.396825	UNKNOWN
104	8.384995	1.128531	71.0000
105	NOT APP.	NOT APP.	0.0
106	2.250000	1.069391	30.0000
107	0.045000	1.499999	100.0000
108	0.126000	2.863636	99.0000
109	0.200000	0.833333	7.6000
110	NOT APP.	NOT APP.	0.0
111	2.842497	1.799048	46.0000
112	0.302500	1.490147	35.0000
113	0.529500	0.957505	49.4000
114	0.320000	1.280000	78.0000
115	1.983199	0.708285	58.8000
116	0.864000	0.720000	40.0000

TABLE SECTION VII-4

COOLING TOWER MAKEUP FLOW RATES
IN THE PETROLEUM REFINING INDUSTRY

Refinery	Makeup Flow (MGD)	Makeup Flow Divided By Total Effluent Flow	Percentage Of Cooling By BTU By Cooling Towers
117	1.450000	1.435642	99.0000
118	0.036500	1.013887	30.0000
119	0.100500	0.670000	28.0000
120	0.175000	1.590908	30.0000
121	4.250000	0.944444	65.0000
122	3.323500	0.519297	97.0000
124	0.975999	2.054735	100.0000
125	0.766000	1.725224	60.0000
126	0.400000	0.061728	22.0000
127	0.090000	0.520231	99.0000
128	NOT APP.	NOT APP.	0.0
129	0.066600	0.665999	UNKNOWN
130	NOT APP.	NOT APP.	0.0
131	0.330000	0.114583	20.0000
132	1.599999	0.156648	10.0000
133	5.160996	0.650819	85.0000
134	0.0	0.0	62.0000
135	0.0	UNKNOWN	UNKNOWN
136	0.378000	1.321678	100.0000
137	0.0	0.0	100.0000
138	0.466000	0.647222	1.0000
139	0.071000	5.071427	99.9000
140	0.222000	2.018181	70.0000
141	0.0	0.0	100.0000
142	0.502500	0.317235	66.5000
143	0.030000	0.025000	2.0000
144	0.759500	1.161314	100.0000
145	0.004500	UNKNOWN	100.0000
146	0.300000	3.225806	UNKNOWN
147	1.695000	2.942707	89.0000
148	0.126500	0.790625	100.0000
149	0.740000	0.627650	77.0000
150	NOT APP.	NOT APP.	0.0
151	4.150000	1.044288	61.7000
152	3.070000	0.366348	35.0000
153	5.792998	1.489202	63.0000
154	0.063000	0.063000	UNKNOWN
155	0.391700	2.266782	100.0000
156	1.697997	1.697997	60.0000
157	4.119996	2.049748	88.9000
158	0.570800	1.041605	71.5000
159	0.199500	0.720216	60.0000
160	0.328000	1.874285	100.0000
161	2.114997	3.253841	90.0000
162	2.115499	0.863469	UNKNOWN
163	2.732998	2.635486	88.0000
164	0.030000	1.363636	100.0000
165	0.595400	2.053102	49.3000
166	0.050000	0.454545	67.0000
167	3.864999	0.757843	70.0000
168	1.240000	0.430555	200.0000
169	6.794998	0.783737	90.0000
172	0.772000	0.839130	91.3000
173	0.0	0.0	UNKNOWN

TABLE SECTION VII-4

COOLING TOWER MAKEUP FLOW RATES
IN THE PETROLEUM REFINING INDUSTRY

Refinery	Makeup Flow (MGD)	Makeup Flow Divided By Total Effluent Flow	Percentage Of Cooling By BTU By Cooling Towers
174	NOT APP.	NOT APP.	0.0
175	10.787498	0.864521	UNKNOWN
176	0.086000	0.184986	33.0000
177	0.028000	0.036601	75.0000
179	0.632700	2.243616	82.0000
180	1.870998	0.676183	98.7500
181	20.876480	1.301526	49.0000
182	6.599497	1.031171	70.0000
183	2.169648	3.390075	59.7000
184	4.675997	3.438233	75.0000
185	1.771500	2.116487	95.0000
186	2.574697	1.418566	71.0000
187	3.244994	4.203360	60.0000
188	> 4.653500	> 1.911087	80.0000
189	0.0	0.0	UNKNOWN
190	0.085000	2.560240	70.0000
191	2.545500	5.606828	100.0000
192	> 0.028000	> 0.198582	100.0000
193	0.0	0.0	UNKNOWN
194	11.303490	0.664911	79.0000
195	0.0	0.0	UNKNOWN
196	16.445465	0.888944	91.3000
197	0.002000	0.250000	100.0000
199	0.017200	UNKNOWN	UNKNOWN
200	1.694998	2.769604	70.0000
201	2.156999	2.270524	69.0000
202	0.009500	95.000000	100.0000
203	10.209991	0.789026	65.0000
204	5.268191	1.560205	75.0000
205	2.818796	1.156192	90.6000
206	12.500000	134.408600	100.0000
207	0.180000	2.535211	90.0000
208	2.844998	0.570140	47.5000
209	0.413500	1.759574	40.0000
210	0.137000	3.512819	79.9000
211	0.679049	0.834726	UNKNOWN
212	1.763000	2.507822	65.0000
213	0.038880	0.762353	35.0000
214	0.0	0.0	UNKNOWN
215	0.0	0.0	UNKNOWN
216	16.502472	0.808945	78.0000
218	7.800000	UNKNOWN	100.0000
219	1.939999	1.616665	63.0000
220	0.022000	0.916667	100.0000
221	0.0	0.0	99.5000
222	0.860000	2.457141	100.0000
224	0.0	0.0	UNKNOWN
225	1.679999	1.411764	97.9000
226	0.0	0.0	29.8000
227	1.483199	1.167872	80.0000
228	0.364500	1.752403	100.0000
229	0.113500	5.456731	100.0000
230	1.150000	1.642857	88.0000
231	NOT APP.	NOT APP.	0.0

TABLE SECTION VII-4

COOLING TOWER MAKEUP FLOW RATES
IN THE PETROLEUM REFINING INDUSTRY

Refinery	Makeup Flow (MGD)	Makeup Flow Divided By Total Effluent Flow	Percentage of Cooling By BTU by Cooling Towers
232	0.0	0.0	2.5000
233	2.450000	2.450000	45.0000
234	0.0	0.0	UNKNOWN
235	2.149999	1.433332	83.0000
236	0.016000	0.133333	UNKNOWN
237	0.016000	0.571428	90.0000
238	1.999999	1.044931	84.5000
239	0.055000	0.436508	47.0000
240	0.180000	0.300000	UNKNOWN
241	0.324000	0.490909	100.0000
242	0.450000	0.703125	95.0000
243	0.524000	3.119045	69.0000
244	0.612000	0.334426	99.0000
245	0.707000	1.178332	99.6000
246	0.182500	0.323009	UNKNOWN
247	0.558800	2.696910	100.0000
248	0.0	0.0	100.0000
249	0.380000	0.456731	50.0000
250	0.0	UNKNOWN	UNKNOWN
251	NOT APP.	NOT APP.	0.0
252	0.009000	0.064748	90.0000
253	0.0	0.0	UNKNOWN
254	0.0	UNKNOWN	UNKNOWN
255	0.0	0.0	UNKNOWN
256	0.040000	0.109589	100.0000
257	NOT APP.	NOT APP.	0.0
258	0.792000	0.792000	40.0000
259	NOT APP.	NOT APP.	0.0
260	NOT APP.	NOT APP.	0.0
261	0.640000	1.361701	90.0000
264	0.0	0.0	UNKNOWN
265	1.296000	1.169674	UNKNOWN
266	NOT APP.	NOT APP.	0.0
278	0.0	UNKNOWN	UNKNOWN
291	0.506000	3.563379	90.0000
292	NOT APP.	NOT APP.	0.0
295	0.610600	2.361176	90.0000
296	NOT APP.	NOT APP.	0.0
298	0.0	0.0	100.0000
302	NOT APP.	NOT APP.	0.0
303	0.0	UNKNOWN	UNKNOWN
305	0.040000	0.863931	100.0000
307	0.0	UNKNOWN	UNKNOWN
308	0.0	UNKNOWN	UNKNOWN
309	0.720000	0.743801	100.0000

- DUE TO UNKNOWN MAKE-UP FLOWS FOR SOME COOLING TOWERS, THE NUMBER IS GREATER THAN SHOWN
NOT APP. - NOT APPLICABLE BECAUSE OF 0.0 % COOLING BY COOLING TOWERS

TABLE VII-5

SUMMARY OF FLOW REDUCTION TECHNIQUES USED IDENTIFIED DURING WASTEWATER RECYCLE STUDY

Refinery No.	Base Year	Process Wastewater Discharge Rate (MGD)	Proposed BAT Discharge Rate (MGD)	Potential Flow Reduction Techniques Identified to Achieve BAT Discharge Rate	Additional Flow Reductions Techniques Identified
32	1979	2.43	3.53	Refinery has achieved BAT discharge rate.	In-Place: Reuse of treated effluent for cooling water, service water, coke sluicing operation, and coke pile dust control. Reuse of stripped sour water for desalter makeup and washwater. Recovery and reuse of condensate for boiler feedwater. Potential: Reuse of stripped sour water and isocracker water for cooling tower makeup. Recovery and reuse of condensate for cooling tower makeup. Optimization of cooling tower operation
50	1979	0.06	0.32	Refinery has achieved BAT discharge rate	In Place: Reuse of treated effluent for cooling tower makeup. Potential: Reuse of sour water for desalter makeup.
57	1978	4.10	1.59	Recovery and reuse of condensate for desalter makeup and boiler feed-water. Reduction of steam vent losses. Control of cooling tower blowdown. Reduction of once-thru pump cooling water.	In-Place: Reuse of treated effluent for firewater system Recovery and reuse of condensate for desalter makeup and boiler feedwater
60	1979	1.12	2.46	Refinery has achieved BAT discharge rate	In-Place: Reuse of treated effluent for utility water, firewater, washwater, pump cooling, and coking operation. Reuse of stripped sour water for desalter makeup and washwater. Recovery and reuse of condensate. Recycle of desalter effluent
67	1979	10.0	8.26	Reuse of treated effluent for cooling tower makeup	In-Place: Reuse of treated effluent for cooling tower makeup and firewater system. Potential: Recovery and reuse of condensate for boiler feed-water. Reduction of steam vent losses. Recycle of process water.

TABLE VII-5

SUMMARY OF FLOW REDUCTION TECHNIQUES USED IDENTIFIED DURING WASTEWATER RECYCLE STUDY (Continued)

Refinery No.	Base Year	Process Wastewater Discharge Rate (MGD)	Proposed BAT Discharge Rate (MGD)	Potential Flow Reduction Techniques Identified to Achieve BAT Discharge Rate	Additional Flow Reductions Techniques Identified
84	1978	1.33	1.12	Reuse of stripped sour water for desalter makeup and FCC washwater. Reduction of boiler blowdown.	In-Place: Reuse of treated effluent for decoking operation. Potential: Recovery of steam vent losses. Control of cooling tower blowdown.
96	1979	8.0	10.1	Refinery has achieved BAT discharge rate	In-Place: Reuse of stripped sour water for desalter makeup. Recovery and reuse of condensate for desalter makeup. Reduction of once-thru pump cooling water.
112	1978	0.17	0.11	Recovery and reuse of condensate for boiler feedwater. Reduction of steam vent losses. Recovery and reuse of once-thru pump and compressor cooling water for desalter makeup.	
125	1978	2.36	1.13	Reuse of treated effluent for cooling water at catalytic cracking unit. Replacement of barometric condensers with surface condensers and reuse of treated effluent for cooling. Recovery and reuse of condensate for boiler feedwater. Control of cooling tower blowdown. Reduction of once-thru pump cooling water.	In-Place: Reuse of treated effluent for barometric condensers and pump cooling water at crude unit. Recovery and reuse of condensate for boiler feedwater. Potential: Reuse of treated effluent for utility water, pump and heat exchanger cooling water.

TABLE VII-5

SUMMARY OF FLOW REDUCTION TECHNIQUES USED IDENTIFIED DURING WASTEWATER RECYCLE STUDY (Continued)

Refinery No.	Base Year	Process Wastewater Discharge Rate (MGD)	Proposed BAT Discharge Rate (MGD)	Potential Flow Reduction Techniques Identified to Achieve BAT Discharge Rate	Additional Flow Reductions Techniques Identified
157	1979	2.17	2.31	Refinery has achieved BAT discharge rate.	In-Place: Recovery and reuse of condensate for boiler feedwater and desalter makeup. Reduction of steam requirements. Reuse of stripped sour water for wash water. Reuse of treated effluent for desalter makeup. Optimization of cooling tower operation. Recycle of desalter effluent and process water. Potential: Recovery and reuse of condensate for boiler feedwater. Reduction of steam vent losses. Reuse of treated effluent for cooling tower makeup. Reuse of once-thru cooling water for cooling tower makeup.
168	1979	3.25	2.75	Reduction of once-thru cooling water and service water. Improved oil/water separation for once-thru cooling water with increased segregation from process wastewater for separate discharge.	In-Place: Recovery and reuse of condensate for desalter makeup. Potential: Reuse of stripped sour water for desalter makeup. Recovery and reuse of condensate for boiler feedwater. Reduction of steam vent losses.
180	1978	1.81	1.66	Control of cooling tower blowdown.	Potential: Reuse of stripped sour water for desalter makeup. Recovery and reuse of condensate for boiler feedwater and desalter makeup. Reduction of steam vent losses. Reuse of treated effluent for firewater system.
196	1978	26.7	7.6	Dissolved air flotation and reuse of treated effluent for cooling tower makeup, firewater, and service water. Segregation, dissolved air flotation and filtration of ballast water, and filtration of regenerant wastes for separate discharge. Elimination of brackish water in firewater system.	Potential: Reuse of stripped sour water for desalter makeup. Recovery and reuse of condensate for boiler firewater.

TABLE VII-5

SUMMARY OF FLOW REDUCTION TECHNIQUES USED IDENTIFIED DURING WASTEWATER RECYCLE STUDY (Continued)

Refinery No.	Base Year	Process Wastewater Discharge Rate (MGD)	Proposed BAT Discharge Rate (MGD)	Potential Flow Reduction Techniques Identified to Achieve BAT Discharge Rate	Additional Flow Reductions Techniques Identified
205	1978	1.65	1.34	Filtration and reuse of treated effluent for firewater system.	In-Place: Reuse of stripped sour water for desalter makeup. Recovery and reuse of condensate for cooling tower makeup and boiler feedwater. Optimization of cooling tower operation.
238	1979	2.14	1.03	Dissolved air flotation, filtration, and reuse of treated effluent for cooling tower makeup and washwater. Segregation, dissolved air flotation and filtration of ballast water, and filtration of regenerant wastes for separate discharge.	In-Place: Recovery and reuse of condensate for desalter makeup and boiler feedwater. Potential: Control of cooling tower blowdown.

TABLE VII-6

Summary of Data on Removal of Cyanides with Steam Stripping and Biological Treatment in the Petroleum Refining Industry

Percent Removal of Cyanides by Steam Stripping (ref. 48)		Biological Treatment (from Tables V-1 thru V-18)	
Refluxed	Non-Refluxed	Plant Number	Percent Removal of Cyanides
0	91	50	85
73	59	59	60
0	22	80	90
57	50	84	90
—	75	126	83
		169	70
		205	82
		235	52
Average for Both	53	Average	77

TABLE VII -7

Zero Discharge Refineries*

Refinery	Capacity (1000 bbl/stream day)	Wastewater Disposition
C&H Refinery, Inc. Lusk, WY	.05	Evap/perc pond
Southwestern Refining Co., Inc. LaBarge, WY	.5	No wastewater generated
United Independent Oil Co. Tacoma, WA	.75	No wastewater generated
Yetter Oil Co. Colmer, IL	1.	Evap/perc pond
Dorchester Gas Producing Co. Amarillo, TX	1.	Evap/perc pond
Mountaineer Refining Co., Inc. LaBarge, WY	1.	Evap/perc pond
Glenrock Refinery, Inc. Glenrock, WY	1.	Evap/perc pond
Thriftway, Inc. Graham, TX	1.	No wastewater generated
Sage Creek Refining Co. Cowley, WY	1.	No wastewater generated
Pioneer Refining, Ltd. Nixon, TX	2.2	Evap/perc pond
Oxnard Refinery Oxnard, CA	2.5	Disposal well
Caribou Four Corners, Inc. Kirtland, NM	2.5	No wastewater generated
Kenco Refinery, Inc. Wolf Point, MT	3.	Evap/perc pond
Kentucky Oil and Refining Co. Betsy Layne, Ky	3.0	No wastewater generated

* This table includes all refineries whose production wastewater (excluding stormwater, ballast water, once-thru non-contact cooling water, and sanitary wastewater) is not discharged directly via an NPDES permit nor is discharged to a POTW. This table also includes those refineries which do not generate production wastewater.

TABLE VII-7

Refinery	Capacity (1000 bbl/stream day)	Wastewater Disposition
Sabre Refining, Inc. Bakersfield, CA	3.5	Contract disposal
Mid-Tex Refinery Hearne, TX	3.5	Recycle (7/1/77)
Bayou State Oil Corp. Shreveport, LA	4.	Disposal well, Evap/perc pond
Thriftway Co. Farmington, NM	4.	Evap/perc pond
Southern Union Refining Co., Monument Refinery, Hobbs, NM	4.5	Disposal well
Arizona Fuels Corp. Fredonia, AZ	5.	Leaching bed Disposal well
Tonkawa Refining Co. Arnett, OK	5.	Evap/perc pond
Plateau, Inc. Roosevelt, UT	5.6	Evap/perc pond
Texas Asphalt and Refining Co. Euless, TX	6.0	Evap/perc pond Contract disposal
Sunland Refining Corp. Bakersfield, CA	7.	Evap/perc pond
Plateau, Inc. Farmington, NM	7.5	Evap/perc pond
Douglas Oil Co. of CA Santa Maria, CA	9.5	Disposal well
Gary Western Co. Fruita, CO	10.	Evap/perc pond Recycle
E-Z Serve, Inc. Scott City, KS	10.	Evap/perc pond
Husky Oil Co. Cody, WY	10.8	Evap/perc pond (7/1/77)

TABLE VII-7

Refinery	Capacity (1000 bbl/stream day)	Wastewater Disposition
Witco Chemical Corp. Oildale, CA	11.	Contract disposal
Newhall Refining Co., Inc. Newhall, CA	12.	Contract disposal
Atlantic Richfield Co. Prudhoe Bay, AK	13.	Evaporation
Atlantic Terminal Corp. Newington, NH	15.	Leaching bed
Kern County Refinery, Inc. Bakersfield, CA	17.	Surface spray
San Joaquin Refining Co. Bakersfield, CA	17.	Evap/perc pond, recycle
Texaco Inc. El Paso, TX	17.	Evap/perc pond, recycle
Shell Oil Co. Gallup, NM	19.	Evap/perc pond
Texaco, Inc. Amarillo, TX	20.	Disposal well, Evap/perc pond
Texaco, Inc. Casper, WY	21.	Evap/perc pond, recycle
Mohawk Petroleum Corp., Inc. Bakersfield, CA	22.8	Evap/perc pond
CRA, Inc. Phillipsburg, KS	23.2	Evap/perc pond
Husky Oil Co. Cheyenne, WY	24.2	Evap/perc pond
Southern Union Refining Co. Lovington Refinery, Hobbs, NM	25.1	Disposal well
Little America Refining Co. Evansville, WY	25.5	Evap/perc pond
Chevron U.S.A. Inc. Bakersfield, CA	26.	Contract disposal, recycle

TABLE VII-7

Refinery	Capacity (1000 bbl/stream day)	Wastewater Disposition
Navajo Refining Co. Artesia, NM	29.9	Evap/perc pond
Champlin Petroleum Co. Wilmington, CA	32.	Disposal well
Shell Oil Co. Odessa, TX	35.	Evap/perc pond
Lion Oil Co. Bakersfield, CA	40.	Disposal well, Evap/perc pond
Amoco Oil Co. Casper, WY	44.5	Evap/perc pond, recycle
Sinclair Oil Corp. Sinclair, WY	50.9	Evap/perc pond
Diamond Shamrock Corp. Sunray, TX	53.5	Disposal well
Cosden Oil and Chemical Co. Big Spring, TX	56.	Evap/perc pond, recycle
Hawaiian Independent Refininery Ewa Beach, HI	60.3	Disposal well, Evap/perc pond
Chevron U.S.A. Inc. El Paso, TX	75.	Evap/perc pond

TABLE VII-8

STEAM ELECTRIC POWER PLANTS USING VAPOR COMPRESSION EVAPORATION AS PART OF THEIR WASTEWATER TREATMENT SYSTEM

Station & Location	Owner/Operator	Capacity (lbs/hr)
San Juan Station Farmington, NM	Public Service Co. of New Mexico	94,500 189,000
Huntington Station Huntington, UT	Utah Power & Light	94,500
Navajo Station Page, AZ	Salt River Project	94,500
Hayden Station Hayden, CO	Colorado-Ute Electric Assoc. Inc.	123,000
Colstrip Station Colstrip, MT	Montana Power Co.	157,000
Craig Station Craig, CO	Colorado-Ute Electric Assoc. Inc.	350,000
R. D. Nixon Station	City of Colorado Springs	175,000
Four Corners Fruitland, NM	Arizona Public Service	202,000
Pawnee Station Brush, CO	Public Service Co. of Colorado	227,000
Big Stone Plant South Dakota	Otter Tail Power	300,000

TABLE VII-9

TREATMENT OPERATIONS AND WATER USAGE 1973 AND 1976

Ref. No.	Treatment Operations 1973	Treatment Operations 1976	Water Usage Million Gal/Day 1973	Water Usage Million Gal/Day 1976	% Red.
001	DAF Act. Sludge	Corr. Plate Sep. DAF Act. Sludge	0.61	1.87	-207
002		Chemical Floc.	0.291	0.186	36
003		RBC		0.125	
004		None			
006	Stab. Pond	DAF Aerated Lag.	0.144	0.144	0.0
007	DAF Stab. Pond	DAF Aerated Lag.	0.200	0.243	-22
008	Aerated Lag.			10.0	
009	Aerated Lag.	Aerated Lag. Pol. Pond	0.26	0.09	65
010	Stab. Pond	Stab. Pond	0.44	0.14	68
011	Stab. Pond		2.92	3.52	-21
012	Stab. Pond	Pre-Filtration Stab. Pond	0.23	0.72	-213
013	DAF	Chemical Floc. DAF	12.35	10.96	11
014	DAF		0.062	0.155	-150

TABLE VII-9

TREATMENT OPERATIONS AND WATER USAGE 1973 AND 1976
(continued)

Ref. No.	Treatment Operations 1973	Treatment Operations 1976	Water Usage Million Gal/Day 1973	Water Usage Million Gal/Day 1976	% Red.
015	DAF Filtration	Chemical Floc. OAF		0.270	
016	None	None		0.56	
017		Chemical Floc. Evap. or Perc. Pond		0.06	
018	None	None		0.60	
019	None	None			
020	DAF Act. Sludge	Chemical Floc. DAF Act. Sludge Pol. Pond	4.79	4.51	5.8
021	None	None		0.22	
022		DAF		0.18	
023		Filtration Evap. or Perc. Pond		.475	
024	DAF Aerated Lag.	DAF Aerated Lag. Other Org. Rem.	0.35	0.54	-54
025	DAF	DAF Other Org. Rem.		1.4	
026	None	Other Org. Rem.		0.35	
027					

TABLE VII-9

TREATMENT OPERATIONS AND WATER USAGE 1973 AND 1976
(continued)

Ref. No.	Treatment Operations 1973	Treatment Operations 1976	Water Usage Million Gal/Day 1973	Water Usage Million Gal/Day 1976	% Red.
028					
029	None	OAF		6.5	
030	None	Evap. or Perc. Pond		0.33	
031	None	DAF		0.10	
032	DAF Aerated Lag. Stab. Pond	DAF Aerated Lag. Stab. Pond	18.80	16.2	14
033			0.71		
034					
035		None		4.0	
036	Evap. or Perc. Pond	Evap. or Perc. Pond		0.12	
037	DAF Act. Sludge	DAF Aerated Lag. Pol. Pond	7.6	7.6	0.0
038	Corr. Plate Sep. DAF	Corr Plate Sep. DAF	7.73	6.34	18
039	Evap. or Perc. Pond			0.35	
040	None	Chemical Floc. DAF Act. Sludge Others Org. Rem.	57.0	11.2	20

TABLE VII-9

TREATMENT OPERATIONS AND WATER USAGE 1973 AND 1976
(continued)

Ref. No.	Treatment Operations 1973	Treatment Operations 1976	Water Usage Million Gal/Day 1973	Water Usage Million Gal/Day 1976	% Red.
041	Aerated Lag.	Corr. Plate Sep. Aerated Lag. Stab. Pond Pol. Pond		126.2	
042	Aerated Lag. Evap. or Perc. Pond	Chemical Floc. Aerated Lag. Evap. or Perc. Pond		0.10	
043	None	DAF Stab. Pond		4.96	
044		Filtration Evap. or Perc. Pond		2.72	
045	DAF	Chemical Floc. DAF OAF	29.71	28.9	2.7
046	DAF	Chemical Floc. DAF	55.60	44.	21
047					
048	Stab. Pond Evap. or Perc. Pond	Evap. or Perc. Pond	1.27	0.85	33
049	Aerated Lag.	Aerated Lag. Pol. Pond	1.53	0.77	50
050	Aerated Lag.	DAF Aerated Lag. Stab. Pond Filtration	0.40	0.47	-18

TABLE VII-9

TREATMENT OPERATIONS AND WATER USAGE 1973 AND 1976
(continued)

Ref. No.	Treatment Operations 1973	Treatment Operations 1976	Water Usage Million Gal/Day 1973	Water Usage Million Gal/Day 1976	% Red.
051	Act. Sludge	Chemical Floc. DAF Act. Sludge Pol. Pond		321.	
052	Evap. or Perc. Pond	Stab. Pond Pol. Pond		0.34	
053	None	Filtration	1.25	0.11	Question-able Data
054	DAF		0.08	0.09	-13
055	None	Corr. Plate Sep. Stab. Pond Pol. Pond Evap. or Perc. Pond		0.18	
056	Aerated Lag.	DAF Aerated Lag. Pol. Pond Evap. or Perc. Pond	4.24	5.82	-37
057	Aerated Lag.	Aeraged Lag. Pol. Pond		17.63	
058	None	DAF		2.73	
059	DAF Aerated Lag.	DAF Act. Sludge	51.27	2.4	Question-able Data

TABLE VII-9

TREATMENT OPERATIONS AND WATER USAGE 1973 AND 1976
(continued)

Ref. No.	Treatment Operations 1973	Treatment Operations 1976	Water Usage Million Gal/Day 1973	Water Usage Million Gal/Day 1976	% Red.
060	DAF Aerated Lag. Act. Sludge Filtration	Chemical Floc. DAF Act. Sludge Filtration	4.84	5.2	-7.4
061	DAF Act. Sludge	Chemical Floc. DAF Act. Sludge Pol. Pond	12.09		
062	Trick Filter Evap. or Perc. Pond	Trick Filter Aerated Lag. Pol. Pond	13.4	9.57	29
063	Aerated Lag. Stab. Pond	Aerated Lag. Pol. Pond	7.97	8.79	-10
064	DAF Act. Sludge	DAF Act. Sludge	27.89	24.8	11
065	Act. Sludge	Act. Sludge Pol. Pond	4.06	5.0	-23
066		Evap. or Perc. Pond		0.001	
067	DAF Aerated Lag.	Chemical Floc. DAF Aerated Lag.	13.49	144.3	-7
068	Act. Sludge	Act. Sludge	8.52	6.72	21
070		None		0.17	

TABLE VII-9

TREATMENT OPERATIONS AND WATER USAGE 1973 AND 1976
(continued)

Ref. No.	Treatment Operations 1973	Treatment Operations 1976	Water Usage Million Gal/Day 1973	Water Usage Million Gal/Day 1976	% Red.
071	DAF Stab. Pond	Chemical Floc. DAF Aerated Lag. Pol. Pond	0.68	0.59	13
072	Aerated Lag. Stab. Pond	Chemical Floc. Aerated Lag. Pol. Pond	1.44		
073	Aerated Lag. Stab. Pond	Chemical Floc. Aerated Lag. Pol. Pond	1.01	1.79	-77
074	Aerated Lag.	Aerated Lag. Pol. Pond	0.63	0.67	-0.3
075	None		1.27		
076	Stab. Pond	Chemical Floc. Aerated Lag. Pol. Pond	3.60	3.0	17
077	Evap. or Perc. Pond	Act. Sludge Pol. Pond Evap. or Perc. Pond	0.63	0.63	0.0
078	None	Chemical Floc.		0.51	
079	None		0.16		
080	Stab. Pond	Stab. Pond	1.33	3.46	-160

TABLE VII-9

TREATMENT OPERATIONS AND WATER USAGE 1973 AND 1976
(continued)

Ref. No.	Treatment Operations 1973	Treatment Operations 1976	Water Usage Million Gal/Day 1973	Water Usage Million Gal/Day 1976	% Red.
081	Chemical Floc. Aerated Lag. Stab. Pond	Aerated Lag. Pol. Pond	2.50	1.58	37
082	None	Evap. or Perc. Pond			
083	DAF	DAF	4.63	4.86	-5.0
084	Aerated Lag. Stab. Pond	DAF Act. Sludge Pol. Pond	3.54	3.84	-8.5
085	None	Chemical Floc. OAF Act. Sludge	11.0	10.43	5.2
086	DAF	Chemical Floc. DAF	0.35	0.47	-34
087	None	Evap. or Perc. Pond	0.42	1.0	-138
088	OAF	Stab. Pond		1.16	
089	Evap. or Perc. Pond	Evap. or Perc. Pond	0.31	0.19	39
090		Aerated Lag.		0.031	
091	None	None	0.032	0.012	63
092	DAF Other Org. Rem.	DAF Act. Sludge Aerated Lag. Pol. Pond	321.5	278.8	13

TABLE VII-9

TREATMENT OPERATIONS AND WATER USAGE 1973 AND 1976
(continued)

Ref. No.	Treatment Operations 1973	Treatment Operations 1976	Water Usage Million Gal/Day 1973	Water Usage Million Gal/Day 1976	% Red.
093		None			
094	Act. Sludge Aerated Lag.	Corr. Plate Sep. DAF Act. Sludge Pol. Pond	4.59	3.6	22
095	None	Stab. Pond Pol. Pond	0.60		
096	Corr. Plate Sep. Aerated Lag.	Corr. Plate Sep. Chemical Floc. DAF Act. Sludge	90.52	34.64	62
097		None		0.034	
098	Aerated Lag.	OAF DAF Aerated Lag. Stab. Pond	31.27	26.56	15
099		DAF Aerated Lag. Pol. Pond		121.	
100	Filtration	Filtration		0.19	
101	Aerated Lag.				
102	Aerated Lag.	Aerated Lag.	17.9	21.1	-18
103		Aerated Lag.		0.27	

TABLE VII-9

TREATMENT OPERATIONS AND WATER USAGE 1973 AND 1976
(continued)

Ref. No.	Treatment Operations 1973	Treatment Operations 1976	Water Usage Million Gal/Day 1973	Water Usage Million Gal/Day 1976	% Red.
104	Aerated Lag.	Corr. Plate Sep. Aerated Lag. Stab. Pond	24.88	21.34	14
105	Aerated Lag.	Chemical Floc. OAF Aerated Lag.	71.0	84.	-18
106	Stab. Pond	Aerated Lag. Pol. Pond	5.76	4.59	20
107	None	Filtration	0.39	0.39	0.0
108	DAF	OAF	0.31	0.34	-9.7
109	DAF Act. Sludge Trick. Filter	Chemical Floc. DAF Act. Sludge Trick. Filter Pol. Pond	83.25	66.22	20
110	Stab. Pond		1.22	1.0	18
111		Chemical Floc. DAF		1.8	
112	Filtration	Aerated Lag.	0.75	0.51	32
113	Aerated Lag.	Aerated Lag. Pol. Pond	1.14	0.90	21
114	Act. Sludge	Aerated Lag. Pol. Pond	0.72	0.59	18

TABLE VII-9

TREATMENT OPERATIONS AND WATER USAGE 1973 AND 1976
(continued)

Ref. No.	Treatment Operations 1973	Treatment Operations 1976	Water Usage Million Gal/Day 1973	Water Usage Million Gal/Day 1976	% Red.
115	Act. Sludge	Pre-Filtration Act. Sludge Pol. Pond	5.05	3.92	22
116	Aerated Lag.	Stab. Pond	2.06	2.77	-34
117	DAF Aerated Lag. Stab. Pond	OAF Aerated Lag. Pol. Pond	2.01	2.10	-4.5
118	None	Aerated Lag. Filtration	0.13	0.94	-623
119	Filtration	Aerated Lag. Filtration	0.17	0.23	-35
120	None	Aerated Lag. Filtration	0.35	0.29	17
121	Corr. Plate Sep. DAF Aerated Lag. Stab. Pond	Corr. Plate Sep. DAF Aerated Lag. Other Org. Rem. Pol. Pond	34.5	14.0	59
122	Aerated Lag.	Aerated Lag.	12.08	35.	Question-able Data
124	None	Chemical Floc. DAF Stab. Pond		1.87	

TABLE VII-9

TREATMENT OPERATIONS AND WATER USAGE 1973 AND 1976
(continued)

Ref. No.	Treatment Operations 1973	Treatment Operations 1976	Water Usage Million Gal/Day 1973	Water Usage Million Gal/Day 1976	% Red.
125	Aerated Lag. Stab. Pond	Aerated Lag. Other Org. Rem. Pol. Pond	1.23	1.28	-4.1
126	Aerated Lag. Stab. Pond	Aerated Lag. Pol. Pond	33.0	40.8	-24
127	DAF Aerated Lag. Stab. Pond	Chemical Floc. DAF Aerated Lag. Pol. Pond	0.31	0.25	19
128		Evap. or Perc. Pond		0.01	
129	Evap. or Perc. Pond	Aerated Lag. Evap. or Perc. Pond Pol. Pond		0.15	
130	None	None	3.13	2.67	15
131	Stab. Pond	OAF RBC	74.01	56.6	24
132	Act. Sludge Aerated Lag.	OAF Act. Sludge	174.5	181.5	-4.0
133	Stab. Pond	DAF Act. Sludge Trick. Filter Filtration	35.28	19.3	45
134	Stab. Pond	Act. Sludge Filtration	8.64	8.81	-2.0

TABLE VII-9

TREATMENT OPERATIONS AND WATER USAGE 1973 AND 1976
(continued)

Ref. No.	Treatment Operations 1973	Treatment Operations 1976	Water Usage Million Gal/Day 1973	Water Usage Million Gal/Day 1976	% Red.
135					
136		Corr. Plate Sep.		0.6	
137	None	None		0.06	
138	None	Evap. or Perc. Pond		1.03	
139	Stab. Pond	Evap. or Perc. Pond		0.168	
140		Evap. or Perc. Pond		0.5	
141	None	Evap. or Perc. Pond		0.03	
142	DAF	Chemical Floc. DAF	18.35	21.67	-18
143	DAF	Chemical Floc. DAF	28.85	33.7	-17
144	Aerated Lag.	Aerated Lag. Pol. Pond	45.02	1.77	Question-able Data
145		None		0.014	
146	Stab. Pond	Stab. Pond	0.32	0.3	6.3
147	DAF	Chemical Floc. DAF Act. Sludge	1.40	1.94	-39
148	DAF	DAF		0.47	

TABLE VII-9

TREATMENT OPERATIONS AND WATER USAGE 1973 AND 1976
(continued)

Ref. No.	Treatment Operations 1973	Treatment Operations 1976	Water Usage Million Gal/Day 1973	Water Usage Million Gal/Day 1976	% Red.
149	Aerated Lag.	Corr. Plate Sep. Aerated Lag.	1.78	4.92	-176
150	Aerated Lag.	Corr. Plate Sep. Act. Sludge	84.44	60.14	29
151	DAF Aerated Lag.	Chemical Floc. DAF Aerated Lag. Pol. Pond	6.50	7.59	-17
152	DAF Aerated Lag.	DAF Act. Sludge	122.1	44.05	64
153	Act. Sludge Trick. Filter Aerated Lag. Stab. Pond	Other Organics Rem. Filtration	5.43	4.7	13
154	Aerated Lag.	Stab. Pond Pol. Pond	0.31	0.85	-174
155	Stab. Pond	Stab. Pond Pol. Pond	0.59	0.65	-10
156	Aerated Lag.	Chemical Floc. DAF Aerated Lag. Pol. Pond	2.47	2.37	4.0
157	Other Organics Rem.	Act. Sludge Aerated Lag. Other Organics Rem.	7.65	7.33	4.2

TABLE VII-9

TREATMENT OPERATIONS AND WATER USAGE 1973 AND 1976
(continued)

Ref. No.	Treatment Operations 1973	Treatment Operations 1976	Water Usage Million Gal/Day 1973	Water Usage Million Gal/Day 1976	% Red.
158	Act. Sludge Stab. Pond	Act. Sludge Pol. Pond	1.40	1.49	-6.4
159	None	Stab. Pond Pol. Pond	0.75	0.69	8.0
160	DAF Act. Sludge Filtration	Chemical Floc. DAF Act. Sludge Stab. Pond Pol. Pond Evap. or Perc. Pond	0.53	0.65	-23
161	Aerated Lag.	Aerated Lag. Other Organics Rem. Pol. Pond	1.72	0.12	-81
162	DAF Aerated Lag.	DAF Act. Sludge	5.84	6.3	-7.9
163	Aerated Lag.	Aerated Lag. Pol. Pond	4.48	3.5	22
164		Evap. or Perc. Pond			
165	Stab. Pond	Chemical Floc. DAF Stab. Pond Pol. Pond	0.73	0.80	-9.6
166	None	None		0.2	

TABLE VII-9

TREATMENT OPERATIONS AND WATER USAGE 1973 AND 1976
(continued)

Ref. No.	Treatment Operations 1973	Treatment Operations 1976	Water Usage Million Gal/Day 1973	Water Usage Million Gal/Day 1976	% Red.
167	DAF Other Organics Rem.	Chemical Floc. DAF Act. Sludge	9.84	11.8	-20
168	Filtration Act. Carbon	Pre-Filtration Act. Carbon	81.4	123.	-51
169	Act. Sludge Trick. Filter	Act. Sludge Trick. Filter	51.2	49.23	3.8
170	None		7.84		
172	None	None		1.58	
173	None	None	5.43	3.07	43
174	None	Aerated Lag.	28.8	8.08	72
175	None	Corr. Plate Sep.	124.5	106.6	14
176	None	Aerated Lag.	3.28	5.86	-79
177	None	None	4.10	2.15	48
178	DAF		0.82		
179	Aerated Lag.	Chemical Floc. Aerated Lag. Stab. Pond Pol. Pond	0.98	0.98	0.0
180	Aerated Lag. Evap. or Perc. Pond	DAF Act. Sludge	4.38	3.91	11

TABLE VII-9

TREATMENT OPERATIONS AND WATER USAGE 1973 AND 1976
(continued)

Ref. No.	Treatment Operations 1973	Treatment Operations 1976	Water Usage Million Gal/Day 1973	Water Usage Million Gal/Day 1976	% Red.
181	Aerated Lag.	Pre-Filtration Act. Sludge Filtration	26.70	27.5	-3.0
182	Aerated Lag.	Act. Sludge	16.56	14.53	12
183	DAF Aerated Lag.	Chemical Floc. DAF Aerated Lag. Pol. Pond	1.40		
184	Act. Sludge	Chemical Floc. Act. Sludge	6.32	6.86	-8.5
185	Evap. or Perc. Pond	Evap. or Perc. Pond		2.4	
186	DAF Act. Sludge	DAF Act. Sludge Stab. Pond	4.35	6.13	-18
187	Evap. or Perc. Pond	Filtration Evap. or Perc. Pond		2.35	
188	None	Corr. Plate Sep.	6.22	5.23	16
189	None	Aerated Lag. Pol. Pond	0.05	0.03	40
190	DAF Aerated Lag.	Aerated Lag. Pol. Pond	0.40	0.12	70
191	DAF			2.89	

TABLE VII-9

TREATMENT OPERATIONS AND WATER USAGE 1973 AND 1976
(continued)

Ref. No.	Treatment Operations 1973	Treatment Operations 1976	Water Usage Million Gal/Day 1973	Water Usage Million Gal/Day 1976	% Red.
192		Evap. or Perc. Pond		0.035	
193	None	None	0.039	0.053	-36
194	Aerated Lag. Stab. Pond	Aerated Lag. Pol. Pond	44.25	32.7	26
195	None	None		0.0011	
196	DAF Act. Sludge Stab. Pond	Corr. Plate Sep. Chemical Floc. DAF Act. Sludge Stab. Pond	130.0	46.38	64
197		Aerated Lag. Pol. Pond		0.012	
198	None				
199		Pre-Filtration Aerated Lag. Filtration		0.05	
200	None	None	2.00	1.43	29
201	DAF Aerated Lag.	Chemical Floc. DAF Act. Sludge Filtration	2.02	2.9	-44
202				0.004	

TABLE VII-9

TREATMENT OPERATIONS AND WATER USAGE 1973 AND 1976
(continued)

Ref. No.	Treatment Operations 1973	Treatment Operations 1976	Water Usage Million Gal/Day 1973	Water Usage Million Gal/Day 1976	% Red.
203	DAF Act. Sludge	Chemical Floc. DAF	52.4	29.14	44
204	Act. Sludge	Chemical Floc. DAF Act. Sludge Pol. Pond		8.07	
205	DAF Aerated Lag. Stab. Pond	DAF Aerated Lag. Pol. Pond	12.66	9.05	29
206	Evap. or Perc. Pond		0.05	0.14	-180
207	None	None			
208	Trick. Filter Act. Sludge Stab. Pond	Corr. Plate Sep. Act. Sludge Trick. Filter Stab. Pond	15.25	23.2	-52
209	Evap. or Perc. Pond	DAF Stab. Pond Pol. Pond Evap. or Perc. Pond		0.76	
210		None			
211	DAF Aerated Lag.	Chemical Floc. DAF Act. Sludge Aerated Lag. Filtration	1.25	1.98	-58

TREATMENT OPERATIONS AND WATER USAGE 1973 AND 1976
(continued)

Ref. No.	Treatment Operations 1973	Treatment Operations 1976	Water Usage Million Gal/Day 1973	Water Usage Million Gal/Day 1976	% Red.
212	DAF Act. Sludge	DAF Act. Sludge	3.57		
213	DAF	OAF Aerated Lag. Stab. Pond Pol. Pond		0.14	
214	Evap. or Perc. Pond	Evap. or Perc. Pond			
215	Evap. or Perc. Pond	Evap. or Perc. Pond			
216	Act. Sludge Aerated Lag.	Chemical Floc. Act. Sludge Aerated Lag.	672.	53.24	Question-able Data
218	Evap. or Perc. Pond			0.68	
219	Aerated Lag.	Aerated Lag. Pol. Pond Filtration		3.45	
220	Evap. or Perc. Pond			0.087	
221	Act. Sludge	Other Organics Rem.	14.33	8.15	43
222	Stab. Pond	Aerated Lag. Pol. Pond		0.89	
223		None			
224	DAF	Chemical Floc. DAF	0.40	0.413	-3.3

TABLE VII-9

TREATMENT OPERATIONS AND WATER USAGE 1973 AND 1976
(continued)

Ref. No.	Treatment Operations 1973	Treatment Operations 1976	Water Usage Million Gal/Day 1973	Water Usage Million Gal/Day 1976	% Red.
225	DAF	DAF Filtration		2.52	
226	Stab. Pond	Stab. Pond Pol. Pond	0.04	0.084	-110
227	Stab. Pond Evap. or Perc. Pond	OAF Aerated Lag. RBC Pol. Pond Filtration	2.56	2.59	-1.2
228	Evap. or Perc. Pond	Stab. Pond Pol. Pond	0.48	0.55	-15
229	None	Evap. or Perc. Pond		0.15	
230	Stab. Pond	Stab. Pond	1.80	1.5	17
231					
232	Aerated Lag. Filtration	Chemical Floc. Filtration	72.22	63.65	12
233	DAF Act. Sludge Stab. Pond	Act. Sludge Trick. Filter Pol. Pond	5.59	3.75	33
234	DAF Act. Sludge	DAF Act. Sludge Trick. Filter Pol. Pond	2.30		

TABLE VII-9

TREATMENT OPERATIONS AND WATER USAGE 1973 AND 1976
(continued)

Ref. No.	Treatment Operations 1973	Treatment Operations 1976	Water Usage Million Gal/Day 1973	Water Usage Million Gal/Day 1976	% Red.
235	Trick. Filter Act. Sludge	Act. Sludge Trick. Filter Pol. Pond	4.40	3.66	17
236	Filtration		0.13	0.15	-15
237	Corr. Plate Sep.	Corr. Plate Sep. OAF Act. Carbon		0.038	
238	Trick. Filter Act. Sludge	Act. Sludge Trick. Filter Aerated Lag. Stab. Pond Pol. Pond	3.72	4.2	-13
239	Filtration Stab. Pond	Corr. Plate Sep. RBC Pol. Pond	0.23	0.216	6.1
240	None		1.58	1.34	15
241	Other Organics Rem.	Act. Sludge Pol. Pond	2.47	0.96	61
242	None	None	0.95	0.86	9.5
243	Aerated Lag. Evap. or Perc. Pond	Aerated Lag. Pol. Pond	0.86	0.77	10
244		Evap. or Perc. Pond		3.19	

TABLE VII-9

TREATMENT OPERATIONS AND WATER USAGE 1973 AND 1976
(continued)

Ref. No.	Treatment Operations 1973	Treatment Operations 1976	Water Usage Million Gal/Day 1973	Water Usage Million Gal/Day 1976	% Red.
245	Stab. Pond	Corr. Plate Sep. Aerated Lag. Pol. Pond Evap. or Perc. Pond			
246	DAF Stab. Pond Evap. or Perc. Pond	Aerated Lag. Evap. or Perc. Pond Pol. Pond	2.16	2.84	-31
247	Evap. or Perc. Pond	Evap. or Perc. Pond		0.84	
248		Evap. or Perc. Pond			
249	DAF Evap. or Perc. Pond	DAF Evap. or Perc. Pond			
250	Evap. or Perc. Pond				
251					
252	Stab. Pond	Stab. Pond	0.24	0.32	-33
253	Evap. or Perc. Pond	Evap. or Perc. Pond			
254		None		1.0	
255		Pre-Filtration Aerated Lag. Pol. Pond		0.13	
256		Corr. Plate Sep. Stab. Pond		0.04	

TABLE VII-9

TREATMENT OPERATIONS AND WATER USAGE 1973 AND 1976
(continued)

Ref. No.	Treatment Operations 1973	Treatment Operations 1976	Water Usage Million Gal/Day 1973	Water Usage Million Gal/Day 1976	% Red.
257	DAF Aerated Lag.	Stab. Pond		99.5	
258	Aerated Lag.	DAF Act. Sludge Pol. Pond		1.96	
259		OAF Act. Sludge		21.55	
260	None	Aerated Lag.	0.25	1.0	-300
261		DAF Trick. Filter RBC Evap. or Perc. Pond			
264				3.0	
265		Corr. Plate Sep. DAF Act. Sludge Stab. Pond Pol. Pond		2.07	
266	None	None	0.94	0.83	12
275					
278		None		0.024	
282					

TABLE VII-9

TREATMENT OPERATIONS AND WATER USAGE 1973 AND 1976
(continued)

Ref. No.	Treatment Operations 1973	Treatment Operations 1976	Water Usage Million Gal/Day 1973	Water Usage Million Gal/Day 1976	% Red.
283					
284					
287					
288					
289					
290					
291					
292					
293					
294					
295					
296					
297					
298					

TABLE VII-9

TREATMENT OPERATIONS AND WATER USAGE 1973 AND 1976
(continued)

Ref. No.	Treatment Operations 1973	Treatment Operations 1976	Water Usage Million Gal/Day 1973	Water Usage Million Gal/Day 1976	% Red.
299					
300					
301					
302		Evap. or Perc. Pond			
303					
304					
305					
306					
307					
308		Evap. or Perc. Pond			
309		Chemical Floc. Act. Sludge Aerated Lag.			

TABLE VII-10

Summary of Treatment Technologies For 1973 and 1976

Treatment Systems	Number of Refineries 1973	1976
Corrugated Plate Separators	4	20
Chemical Flocculation	1	46
Dissolved Air Flotation	56	68
Other Flotation Systems	1	15
Prefiltration	Unknown	6 (1)
Activated Sludge	30	50
Trickling Filter	7	10
Aerated Lagoon	63	73
Stabilization Pond	44	35
Rotating Biological Contactor	0	5
Other Organics Removal	4	10
Filtration	10	23 (1)
Polishing Ponds	Unknown	75
Activated Carbon	1	2
Evaporation or Percolation Ponds	26	37

(1) Two refineries have both prefiltration and post filtration, so that a total of only 27 refineries had filtration systems in 1976.

TABLE VII-11

REFINERY FLOW VS. FINAL EFFLUENT
CONCENTRATION FOR 17 SCREENING PLANTS

Refinery Code	Percent of Actual Discharge Flow to BPT Flow	Average BOD, mg/l	Average TSS, mg/l	Average TOC, mg/l	Average Oil and Grease, mg/l
A	40.8	< 2.5	37.0	11.0	*
B	37.8	18.5	22.0	43.0	34.0
C	36.7	41.0	19.0	39.0	9.0
D	49.7	125.0	62.0	220.0	*
E	143.3	< 9.5	14.5	10.0	*
F	.96	27.0	103.0	92.5	*
G	121.7	< 12.5	56.0	60.0	16.5
H	72.5	< 4.5	9.0	19.5	20.0
I	69.4	< 12.0	8.0	31.5	6.0
J	58.0	6.0	13.5	30.0	13.0
K	89.4	< 8.5	24.0	40.5	21.5
L	173.9	< 7.5	27.5	16.5	*
M	35.0	< 12.0	11.5	16.0	13.0
N	69.1	9.0	45.0	34.5	*
O	121.3	< 51.0	25.0	46.0	*
P	*	< 5.0	6.5	23.5	*
Q	28.0	25.0	30.0	68.5	41.0
Slope		- .11	- .15	- .31	- .11
Intercept		31.27	42.40	70.96	26.03
$(\text{Correlation})^2$		.03	.08	.08	.09

Note: * - NO DATA

TABLE VII-12

Effluent Concentration From 50 Plant Study

Pollutant Parameter	Daily Maximum		30-day	
	Study	BPT	Study	BPT
BOD_5	62	48	20	25.5
TSS	58	31	24	21
O & G	17	15	5.6	8.0
CRT	0.5	0.725	0.13	0.425
POL	1.2	0.35	0.19	0.17

NOTE: Concentrations are given in milligrams per liter (mg/L)

TABLE VII-13

ACHIEVABLE LIMITATIONS VALUES

Pollutant BPT Refineries	Mean Pollutant Level	Daily Variability Factor	Daily Limitation Value	30-Day Variability Factor	30-Day Limitation Value
BOD	15.74	3.93	61.86	1.27	19.95
TSS	19.23	3.00	57.69	1.22	23.53
O&G	4.446	3.90	17.34	1.27	5.63
CRT	0.0928	5.48	0.5085	1.36	0.13
POL	0.1229	10.04	1.234	1.56	0.19

Note: Concentrations are given in milligrams per liter (mg/L)

FIGURE VII-1

ROTATING BIOLOGICAL CONTACTORS

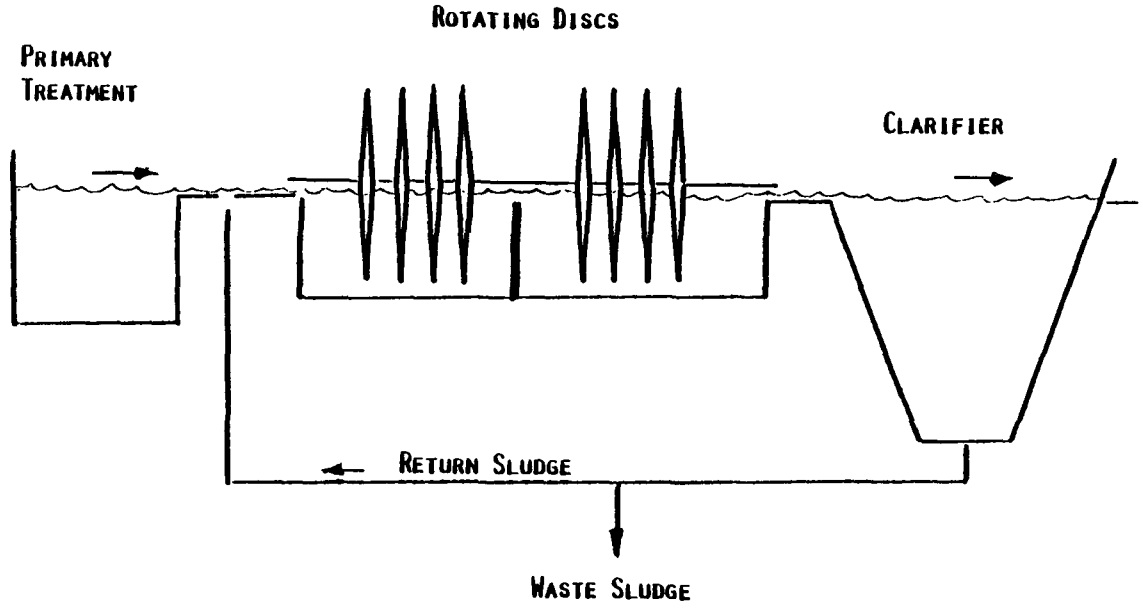

FIGURE VII-2

Flow Diagram of a Granular Activated Carbon System

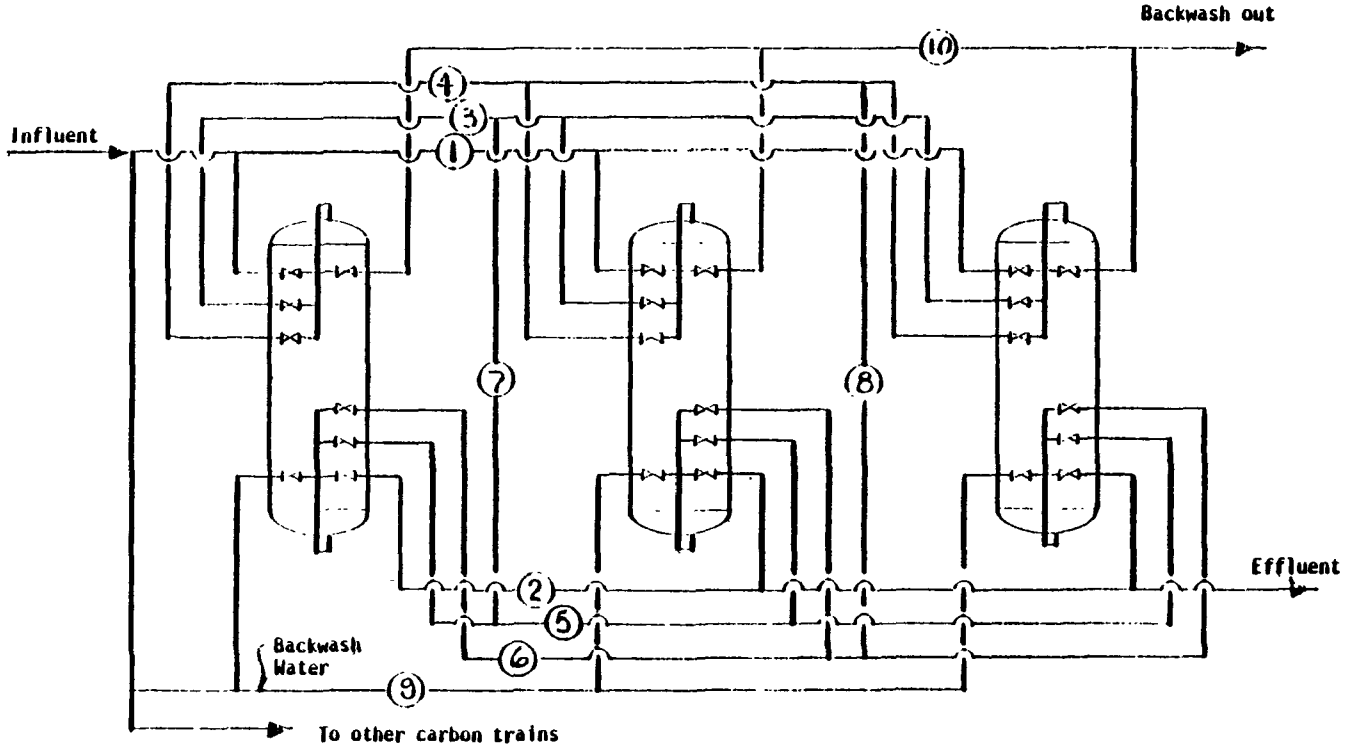

Piping Explanation

(1) Main influent header (to 1st tank in series)
(2) Main effluent header (from 3rd tank in series)
(3) Influent header to 2nd tank in series
(4) Influent header to 3rd tank in series
(5) Effluent header from 1st tank in series
(6) Effluent from 2nd tank in series
(7) Connection between #3 and #5 headers
(8) Connection between #4 and #6 headers
(9) Backwash inlet header
(10) Backwash outlet header

FIGURE VII-3

Carbon Regeneration System

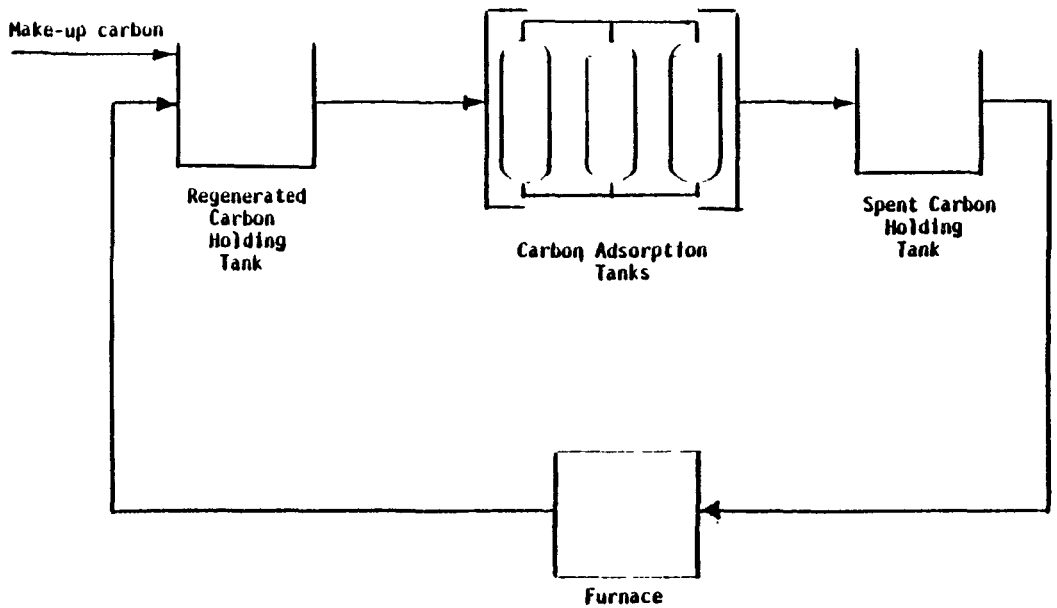

FIGURE VII-4

Flow Diagram of One Powdered Activated Carbon Treatment Treatment Scheme

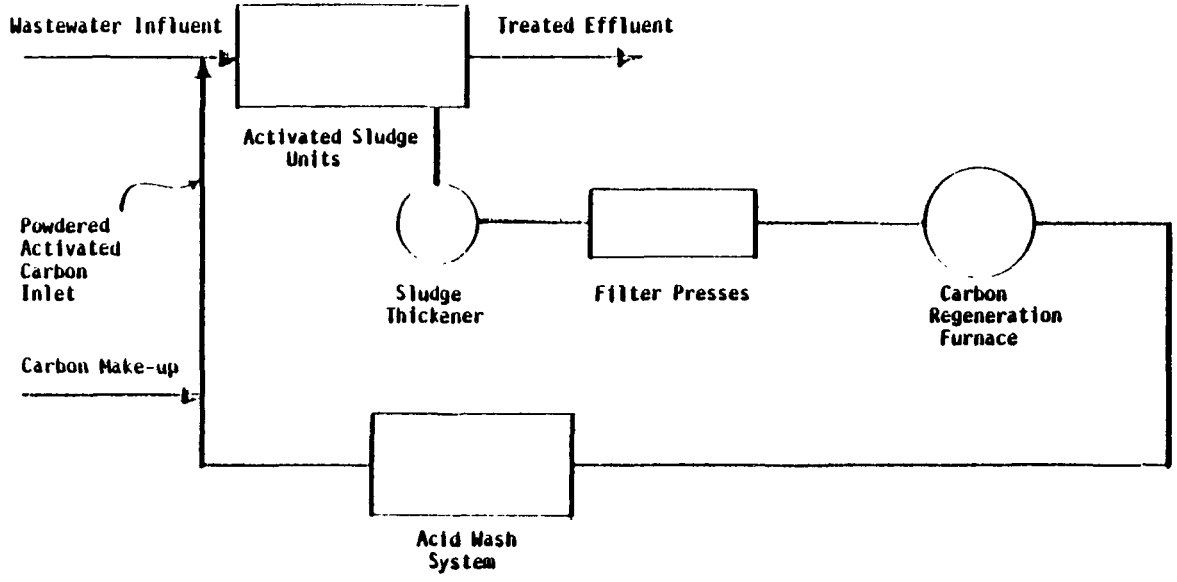

SECTION VIII

BEST AVAILABLE TECHNOLOGY ECONOMICALLY ACHIEVABLE

SUMMARY

Best Available Control Technology Economically Achievable (BAT) is equivalent to the existing Best Practicable Technology Currently Available (BPT) level of control. BAT technology, which is the same as BPT, includes in-plant control and end-of-pipe treatment. BPT in-plant technology consists of widely used control practices such as ammonia and sulfide control, elimination of once through barometric condenser water, segregation of sewers, and elimination of polluted once-through cooling water. BPT end-of-pipe treatment includes flow equalization, initial oil and solids removal (API separator or baffle plate separator), further oil and solids removal (clarifier or dissolved air flotation), biological treatment, and filtration or other final "polishing" steps. The effluent limitations for BAT are the same as those for BPT because the BAT flow model and subcategorization scheme are the same as those for BPT. BAT control technology, which is equivalent to BPT technology, is Option 9 of the nine options considered by the Agency.

BAT limitations, in general, represent the best economically achievable performance of direct dischargers included in an industrial category or subcategory. BAT limitations control the discharge of toxics (priority pollutants) and non-conventional pollutants (COD, phenolic compounds [4AAP], ammonia and sulfides) in the effluent of existing direct dischargers in the petroleum refining industry. BAT does not regulate conventional pollutants (TSS, oil and grease, BOD_5 and pH) which are considered under Best Conventional Treatment Economically Available (BCT).

In assessing BAT, the Agency considers the age of the equipment and facilities involved, the processes employed, the engineering aspects of control technologies, process changes, the cost of achieving such effluent reduction, and non-water quality environmental impacts. The Administrator retains considerable discretion in assigning the weight to be accorded these factors. Where existing performance is uniformly inadequate, BAT may be transferred from a different subcategory or category.

EPA is required to consider costs, but does not have to balance costs against effluent reduction benefits. However, EPA has given substantial weight to the reasonableness of costs. The Agency has considered the volume and nature of discharges, the volume and nature of discharges expected after application of BAT, the general environmental effects of the pollutants, and the

costs and economic impacts of the required pollution control levels.

Effluent limitations for the petroleum refining industry are expressed as mass limitations, i.e., restrictions on the total quantity of pollutants that may be discharged. Since the total mass of pollutants in an effluent stream depends on both the total effluent flow and the concentration of pollutants in that flow, the nine options considered for BAT reflect both flow and concentration considerations.

BAT OPTIONS CONSIDERED

EPA investigated nine control and treatment technology options for selection of BAT criteria. Options 1 through 6 were considered in formulating the proposed rule published in 1979. Model flow for options 1 through 5 refers to the flow model presented in the 1979 proposed regulation. Detailed explanation of these options is available in the 1979 draft development document. Option 7, a modification of Option 2, and Option 8, a modification of Option 1, were developed using the data base available at the time of the 1979 proposal, supplemented and modified by information collected by EPA after the proposed rule was published, as well as from public comments received on the proposed rule. Model flow for Options 7 and 8 refers to the refined flow model which reconciled discrepancies noted in the 1979 model, and more accurately depicted refinery wastewater flows (see Section IV).

Option 9, the BPT level of control, was reconsidered after publication of the proposed rule, as a result of public comments received. Model flow for Option 9 refers to the flow model presented in the 1974 development document.

Option 1 - Discharge flow reduction of 27 percent from model flow, achieved through greater reuse and recycle of wastewaters, in addition to BPT treatment.

Option 2 - Discharge flow reduction of 52 percent from model flow, achieved through greater reuse and recycle of wastewaters, in addition to BPT treatment. This was the control treatment option selected in the 1979 proposal.

Option 3 - Discharge flow reduction of 27 percent from model flow per Option 1, plus BPT treatment enhanced with powdered activated carbon to reduce residual toxic organic pollutants.

Option 4 - Discharge flow reduction of 52 percent from model flow per Option 2, in addition to BPT treatment plus segregation and separate treatment of cooling tower blowdown. Cooling tower blowdown treatment for metals removal includes reduction of hexavalent chromium to trivalent chromium, pH adjustment, precipitation, and settling or clarification.

Option 5 - Discharge flow reduction of 27 percent from model flow per Option 1, in addition to BPT treatment plus granular activated carbon treatment to reduce residual toxic organic pollutants.

Option 6 - A "no discharge of wastewater pollutants" (i.e., zero discharge) standard based upon reuse, recycle, evaporation, or reinjection of wastewaters.

Option 7 - Discharge flow reduction of 37.5 percent from refined model flow achieved through greater reuse and recycle of wastewaters, in addition to BPT treatment.

Option 8 - Discharge flow reduction of approximately 20 percent from refined model flow achieved through greater reuse and recycle of wastewaters, in addition to BPT treatment.

Option 9 - Flow equalization, initial oil and solids removal (API separator or baffle plant separator), additional oil/solids removal (clarifiers or dissolved air flotation), biological treatment, and filtration or other final "polishing" steps. This option is the basis of the existing regulations.

Option 1. Reduce discharge flow to 27 percent below model flow (flow model for 1979 proposal) in addition to BPT treatment. Establish a long term achievable concentration for phenolic compounds (4AAP) at 19 ug/l as the base for computing pollutant load. Fifty percent of the petroleum refineries were already operating at this flow level (27 percent less than model flow) at the time of the 1979 proposal.

Flow reduction is a viable technology in the petroleum refining industry. Since 1972 the refining industry has reported decreasing wastewater discharge flows as refineries install water conservation, recycle and reuse technology in response to existing regulations, water supply costs, and water treatment costs. The following summary of industry discharge flows demonstrates this significant change in water management practices:

Specified Flow Type	Total Flow, MGD
1. Total 1976 Indirect Discharge Flow (Supplemental Flow Questionnaire)	50
2. Total Calculated BPT Flow 1972	569
3. Total 1976 Direct Discharge Flow (Supplemental Flow Questionnaire)	346
4. Total 1976 Direct Discharge Flow	

	Minus Planned Flow Reductions (1977 Industry Survey and Supplemental Flow Questionnaire)	311
5.	Total allowable BAT Flow Based on 1979 Proposed Flow Model	227
6.	Total allowable BAT Flow Based on Refined Flow Model	251
7.	Same as (5), except actual individual flows from (4) are used if less than allowable individual BAT Flows	205
8.	Same as (6), except actual individual flows from (4) are used if less than allowable individual BAT Flows	215

The methods of recycle/reuse are described in detail in Section VII. In order to verify that the 37.5 percent flow reduction was achievable, the Agency conducted a 15 plant study (159). The study concluded that this level of flow reduction can be achieved by traditional recycle/reuse schemes.

Figure V-3 shows the results of projecting this trend toward reduced wastewater flow. The analysis predicts that the petroleum refining industry will achieve the Option 7 flow level (63 percent of revised model flow) within a few years. Reduction in pollutant loading occurs when BPT treatment systems achieve the same discharge pollutant concentrations at a reduced discharge flow level.

The Agency has concluded that removal of non-conventional pollutants would not change measureably from BPT treatment to BPT treatment plus 27 percent flow reduction. Ammonia and sulfide loadings depend primarily upon the process of stripping sour waters, an in-plant control technique, and will not be directly related to flow. No technologically feasible process changes or in-plant controls have been identified to further reduce ammonia and sulfides. Also, chemical oxygen demand (COD) does not vary directly with effluent flow. The Agency's attempts to quantify or predict changes in COD levels with the implementation of flow reduction/water reuse technologies were inconclusive.

Option 1 would limit total phenols at a mass limitation based upon an effluent concentration equivalent to 19 ug/L. The Agency received a number of comments on this issue stating that the proposal to limit total phenols at 19 ug/L was too stringent because technology is not available to consistently achieve such a level. Additional information on phenols was collected by EPA in the Petroleum Refining Long Term Data Analysis (161) and the "Surrogate Sampling Program" (162) subsequent to the December 1979 proposal. Information collected included effluent data from

49 refineries for calendar year 1979 plus 60 day sampling results at two refineries in 1980. Analysis of the data collected during these two studies concluded that 100 ug/L is appropriate to establish a mass limitation applicable on an industrywide basis in light of the variability due to fluctuations in treatment system performance.

Discharge of toxic priority pollutants would be less than BPT levels because the refineries would achieve former BPT concentrations at reduced discharge flows. Estimates of the pollutant reductions to be achieved by BPT treatment plus flow reduction assumed that the pollutant load for trivalent and hexavalent chromium after BPT treatment would be at or near the allowable level. Subsequent evaluation of BPT treatment since the original estimates indicates that BPT treatment achieves better removal of priority pollutants than originally thought, and that reduction in flow would achieve minimal further reductions. The Agency has estimated this further reduction in toxic pollutants over BPT treatment at 1 percent of the priority pollutants in raw refinery wastewater. This translates into an additional removal beyond BPT of approximately 1.3 pounds of toxic pollutants per day, per direct discharge refinery (168).

The preamble to the proposed 1979 regulation (44 FR 75933) stated that $23.5 million additional investment would be required with an annual cost of $9.3 million (1979 dollars) to implement Option 1 for this industry. The capital costs, to a considerable extent, represent retrofit costs. These cost figures are the incremental costs beyond BPT to achieve Option 1 technology.

Option 1 effluent limitations are based upon the flow model for the 1979 proposal. Since the Agency has decided not to use this flow model for the regulation, Option 1 was rejected.

Option 2. Reduce discharge flow, 52 percent below model flow (flow model for 1979 proposal) in addition to BPT treatment. Establish a long term achievable concentration for phenolic compounds (4AAP) at 19 ug/l as the base for computing pollutant load. Thirty-eight percent of the refineries were already operating at or below 52 percent of model flow at the time of the 1979 proposal.

Removal of non-conventional pollutants (ammonia, sulfides and COD) is not directly dependent upon flow reduction. Like Option 1, the Agency has concluded that installation of flow reduction will not achieve measureable decrease in non-conventional pollutant loads over BPT treatment.

This option would also apply the 19 ug/L long term concentration to the 52 percent of model flow to calculate the allowable load by phenolic compounds (4AAP).

Again, many commenters questioned the ability of petroleum refineries to achieve this long term effluent concentration on an industrywide basis. Additional studies by the Agency concluded that 19 ug/L cannot be achieved consistently and that 100 ug/L is the appropriate concentration for regulating loadings of phenolic compounds (4AAP) for all direct dischargers in the petroleum refining industry.

Removal of priority pollutants would again be accomplished by the refineries achieving BPT level treatment at even greater reduced flows. The Agency's analysis of available data shows that implementation of Option 2 would remove an additional 1.5 percent of toxic pollutants from raw wastewaters beyond BPT treatment levels (168). BPT removes 96 percent of the toxic pollutants from raw wastewaters discharged by the petroleum refining industry. This additional 1.5 percent translates into an additional removal beyond BPT of approximately two pounds of toxic pollutants per day, per direct discharge refinery.

The preamble to the 1979 proposal (44 FR 75938) stated that implementation of Option 2 would result in the removal of approximately 123,000 pounds of chromium per year. This 123,000 pounds of chromium per year represents the incremental removal from the BPT level to the BAT Option 2 level. However, based upon reevaluation of the effluent data base, the Agency has found this figure was overstated, because the observed chromium discharge of refineries with BPT level treatment was considerably less than that allowable by the BPT chromium limitations. The actual amount of chromium which would have been removed under this option is approximately 32,000 pounds per year (168).

Implementation of Option 2 would result in annual cost to the industry of $62 million with an initial capital investment of $138 million (1979 dollars). Initial investment includes, to a considerable extent, retrofit costs. These cost estimates represent the incremental cost beyond BPT treatment to achieve Option 2 technology.

BAT Option 2 was developed using the proposed 1979 flow model. However, based upon data submitted by commenters and the "Flow Model" study performed by EPA after the proposal (See Section IV), the proposed 1979 flow model was modified. The technical points raised by some of the commenters were of considerable assistance in the flow model refinement process. The main emphasis of the comments concerned the statistical deficiencies of the proposed model, the choice of model variables, and aspects of the resulting model fit. The structure of the model and the process variables to be included were reexamined and modified accordingly. This refinement process resulted in the refined flow model which was more representative of the current wastewater generation in the industry. Thus, Option 2 has been rejected because it was based on the proposed flow model that has been modified.

Option 3. Reduce discharge flow by 27 percent of model flow (flow model for 1979 proposal) per Option 1 plus enhanced BPT treatment with powdered activated carbon (PAC) to reduce residual toxic organic pollutants.

The two end-of-pipe treatment technologies that were used to establish Option 3 are rotating biological contactors (RBC) and powdered activated carbon (PAC) treatment. At the time of the Agency's data collection efforts in 1976-1979, there were seven facilities using these technologies. The Agency determined that, upon analysis of available data, there are significant operational (mechanical) problems with RBC technology. The Agency also found that full-scale experience with PAC technology was mixed, i.e., some facilities experienced consistently measurable pollutant reductions as intended, while others experienced inconsistent or no measurable effluent reductions. Because of these operational problems observed in full-scale facilities, there was limited performance information available.

The Agency's analysis of available data shows that implementation of Option 3 would remove an additional 1.5 percent of toxic pollutants from raw wastewaters beyond BPT treatment levels. This translates into an additional removal beyond BPT of approximately two pounds of toxic pollutants per day, per direct discharge refinery (168).

Option 3, flow reduction plus PAC enhancement of a biological system may offer promise as a treatment technology to remove individual toxic pollutants under special circumstances, but this option is not a proven technology in the petroleum refining industry which can be applied in an industrywide regulation. Full scale experience with this technology did not produce consistent measurable results.

Given the limited additional effluent reduction benefits and the limited performance data available at this time, Option 3 is not warranted for this industry.

Option 4. Reduce discharge flow by 52 percent of model flow (flow model for 1979 proposal) per Option 2 plus BPT treatment and separate treatment of cooling tower blowdown. This option could result in better removals than Option 2, since cooling tower biocides would not enter the biological treatment system and wastewater would not be diluted with cooling water before biological treatment.

Option 4 was predicated on industrywide ability to segregate, collect, and separately treat cooling tower blowdown, the major source of chromium for this industry. The wastewater recycle/reuse study (see Section VII), completed after the publication of the proposed regulation, concluded that, for existing sources, it is extremely difficult in many instances to segregate cooling tower blowdown for chromium treatment. Cooling

tower blowdown is typically effected at numerous locations throughout a refinery. Extensive collection systems would be necessary at many refineries to collect all blowdown streams for separate treatment. In addition, not all cooling tower blowdown streams are collectible. For instance, cooling water when used as makeup for refinery processing commingles with process water and cannot be traced or segregated, especially in older refineries. Therefore, the Agency has determined that it would not be proper to base BAT effluent limitations guidelines on this technology option.

Because this technology is not available to all direct discharge refineries on an industrywide basis, the Agency has rejected Option 4 as the basis for BAT regulation of existing refineries. However, refineries which will be built in the future can incorporate separate treatment of cooling tower blowdown into the plant design.

Option 5. Reduce discharge flow to 27 percent below model flow (flow model for 1979 proposal) plus BPT treatment and granular activated carbon treatment to reduce residual toxic organic pollutants. Option 5 would provide treatment equivalent to Options 2 and 3.

BAT Option 5 is predicated on industrywide ability to install and operate granular activated carbon (GAC) treatment as an end-of-pipe technology. Although GAC technology is used in other industries, long term performance data of full scale systems treating refinery wastewaters would be required before this technology could be used as the basis for industrywide effluent limitations.

The Agency conducted six pilot plant treatability studies that used GAC to treat refinery wastes after BPT treatment (108). While toxic pollutant removal generally increases with the use of GAC, the levels of toxic pollutants after BPT treatment were so low that additional pollutant reduction across GAC treatment was minimal. Difficulties in quantifying pollutant reductions were experienced when the Agency tried to evaluate toxic pollutant removals in BPT treated water where concentrations approached the analytical limits of quantification.

Because of the difficulties experienced in Agency attempts to measure removal of toxic pollutants, removal efficiencies have not been estimated for this option. Moreover, considering the marginal benefits and uncertain effectiveness of this technology in treating dilute concentrations of priority pollutants, the Agency decided to reject BAT Option 5.

Option 6. Zero discharge of wastewater is a demonstrated technology. There are currently fifty-five refineries in the United States that do not discharge wastewater. However, the technology employed at these zero discharge refineries is very

site specific, e.g., 32 of the 55 use evaporation/percolation basins which rely upon special conditions of climate and geology. The zero discharge technologies considered by the Agency include those currently in use by the industry and those that are applicable from other industrial sources. The Agency realizes that some of the technologies in use by the refinery industry can not be applied in other geographical locations because of meteorological conditions, load availability, and other environmental constraints. Vapor compression distillation is identified to be universally available and applicable. Although none of the refineries are using VCD, full scale use of such a system is being used successfully in the steam electric industry. However, the secondary impacts of VCD can be quite severe, and are prohibitive in the Agency's opinion. These secondary impacts include high energy consumption and solid waste generation.

Removal of toxic pollutants under this option would be 100% assuming that percolating or injected wastewater will not be transported to acquifers and streams. The 1979 development document (158) did not contain an estimate of the cost of retrofitting all existing direct discharge refineries to zero discharge. The technology would be different for each refinery and could be expected to incur higher capital and operating costs than a new refinery designed to achieve zero discharge.

The Agency rejected BAT Option 6, (1) because of its high capital and operating costs, including significant retrofit expenditures; and (2) because analysis of the zero discharge technologies revealed that significant non-water quality impacts would result from their use. These non-water quality impacts include generation of large amounts of solid waste and very high energy consumption.

Option 7. Reduce discharge flow to 37.5 percent below model flow (refined flow model) plus BPT treatment. Option 7 is similar to Option 2, except that the revised mathematical model calculates a slightly different flow quantity. Also the flow reduction below model flow is less than the 1979 proposal. Based upon the refinements to the 1979 flow model described above, flow reduction was revised from an average 52 percent from the 1979 model flow to 37.5 percent from the refined model flow. This average 37.5 percent flow reduction was designated Option 7.

Option 7 resulted from modeling efforts conducted after the 1979 proposed regulation. The methods of recycle/reuse are described in detail in Section VII. In order to verify that the 37.5 percent flow reduction was achievable, the Agency conducted a 15 plant study. The study concluded that this level of flow reduction can be achieved by traditional recycle/reuse schemes.

Removal of non-conventional pollutants beyond BPT treatment would be limited for the reasons discussed under Options 1 and 2.

The Agency's analysis of available data shows that implementation of Option 7 would have removed an additional 110,000 pounds of toxic pollutants annually beyond BPT treatment levels, equivalent to an additional 1.5 percent of toxic pollutants from raw wastewaters beyond BPT treatment levels. This translates into an additional removal beyond BPT of two pounds of toxic pollutants per day per direct discharge refinery.

The Agency estimated the costs to implement Option 7 recycle and reuse technologies. A capital cost of $112 million and $37 million (1979 dollars) in annual costs are associated with Option 7.

The Agency believes, that given the limited additional effluent reduction benefits and the costs involved, Option 7 is not warranted for this industry.

Option 8. Reduce discharge flow to 20 percent below model flow (revised flow model) plus BPT treatment. BAT Option 8 is similar to Option 1. Based upon additional data submitted by commenters and the technical studies performed by EPA after the proposal (See Section IV), the flow model upon which Option 1 is based was reevaluated. The result of this reevaluation was a refinement in the 1979 flow model with use of more and better quality data. The amount of flow reduction via recycle and reuse technologies was determined to be an average 20 percent below refined model flow.

Removal of non-conventional pollutants beyond BPT would be limited for the reasons discussed under Option 1. The Agency's analysis of available data shows that implementation of Option 8 would remove an additional one percent of toxic pollutants from raw wastewaters beyond BPT treatment levels. This translates into an additional removal beyond BPT of 1.3 pounds of toxic pollutants per day, per refinery (168).

The cost of implementing Option 8 is estimated at a capital cost of $77 million and an annual cost of $25 million (1979 dollars).

The Agency believes that, given all these factors and the costs involved, Option 8 is not warranted for this industry.

Option 9. A level of control equivalent to the BPT level of control consists of flow equalization, initial oil and solids removal (API separator, baffle plate separator), further oil and solids removal (clarifiers, dissolved air flotation), biological treatment, and filtration or other final "polishing" steps. This option is based upon the flow model developed for the BPT regulations promulgated by the Agency in 1974. Therefore, the effluent limitations are equivalent to the BPT effluent limitations.

Removal of non-conventional pollutants would remain at current BPT levels. Table VI-1 shows a total annual raw wastewater loading of non-conventional pollutants equal to 257,231 kkg/yr. BPT treatment would reduce this pollutant waste load to 66,988 kkg/yr for a net 74 percent removal of non-conventional pollutants by the petroleum refining industry. Table VI-1 contains removal efficiencies for total phenols as measured by the 4AAP method. BPT treatment reduces the total annual wasteload from 9719 kkg/yr to 7.6 kkg/yr.

Table V-27 contains a summary of the analytical results for concentrations of phenolic compounds (4AAP) and individual toxic phenolic compounds found in the effluent of direct dischargers. Parameter No. 167 (4AAP phenolic) shows an average 15 ug/L in 76 percent of the samples while individual toxic phenolic compounds identified as priority pollutants (parameters 21, 24, 31, 34, 57, 58, 59, 64 and 65) show a total of one detection occurrence at a concentration at or below measurable limits. This data was the basis for the 19 µg/L achievable concentration proposed in 1979.

EPA compiled additional data on the performance of refineries providing BPT treatment in the "Survey of 1979 Effluent Monitoring Data." This study examined the results of BPT treatment at refinery flows predominantly less than 1979 model flows. The analytical results are, therefore, representative of low-flow treatment systems (163). This study computed an average long term achievable concentration of 123 µg/L for refineries with BPT treatment systems. This conclusion supports the long term achievable concentration of 0.100 mg/L initially set forth to calculate BPT pollutant loads at the BPT model flow rate. In addition, the Agency collected data on discharge of phenolic compounds from the Long Term Sampling Program (162) and the EPA Regional Surveillance and Analysis Teams (Table V-29) which confirm that the 19 µg/L value is not representative of average long term performance and that the 100 µg/L is appropriate.

Removal of toxic pollutants would remain at the levels achieved by BPT treatment. Table VI-2 shows a total annual raw wastewater loading equal to 3502 kkg/yr. BPT treatment can reduce the discharge of toxic pollutants to a total annual loading of 137 kkg/yr for a net removal efficiency of 96 percent. Ninety-six percent removal of toxic pollutants is calculated from the actual, measured performance of BPT treatment.

The concentration of pollutants in the final refinery effluents and their associated water quality criteria are presented in Section VI. Limited environmental benefit would be gained by requiring further control beyond BPT.

In summary, only the following pollutants were found at concentrations (average) in excess of 10 ppb: chromium (trivalent), cyanide, zinc, toluene, methylene chloride, and bis(2-ethyhexyl) phthalate. Of these, methylene chloride and

bis(2-ethylhexyl) phathalate are contaminants of the sampling and analytical methodology. Chromium is already limited by BPT. Cyanide occurs in concentrations (flow-weighted average 45 μg/L) at the limits of effective removal by known technologies. Toluene is removed to below measurable limits by all but one refinery and is not characteristic of the industry. Zinc at an average concentration of 105 μg/L is not likely to cause toxic effects.

The cost of implementing Option 9 is effectively zero, since the Act requires that all refineries achieve BPT treatment by 1977.

Considering the limited pollutant reduction benefits associated with Options 1 through 8, the inability to quantify nonconventional pollutant reduction via Options 1 through 8, the costs involved of going beyond the BPT level of control, and the 96 percent reduction in toxic pollutant loadings achieved by BPT, the Agency has determined that the BAT level of control should be equivalent to the BPT level of control for the petroleum refining industry.

IDENTIFICATION OF BEST AVAILABLE TECHNOLOGY ECONOMICALLY ACHIEVABLE

BAT Selection and Design Criteria - EPA selected Option 9. Effluent data from the EPA sampling survey show that present BPT treatment removes 96 percent of the toxic pollutants, 85 percent of the conventional pollutants (BOD, TSS, oil and grease), and 74 percent of the nonconventional pollutants (COD, ammonia, TOC, sulfides, and phenolics (4AAP)). The levels of toxics from the final refinery effluents are extremely low (see Section VI for details).

A separate analysis of the Effluent Guidelines Division sampling and analytical data showed that there are no environmentally significant priority pollutants in direct discharges from petroleum refineries at BPT technology levels after application of the 50th percentile average and low flow dilutions. (See Table VIII-1). The basis for this determination of environmental significance is the comparison of diluted average plant effluent concentrations with ambient water quality criteria as determined by EPA Criteria and Standards Division (165). Selection of this option would result in no additional cost or secondary impacts beyond that associated with BPT compliance.

The bases for the BPT limitations can be found in the 1974 development document. The information upon which the numerical limitations are derived is presented in Table 50-52(3). These tables provide the concentrations, variability factors, and flows used. An example of how BPT should be applied is presented in Section I.

1.6 Diluted Effluent Concentrations From Direct Dischargers in the Petroleum Refining Industry

Pollutant	Current/BPT [1] Flow-weighted Avg. Conc. ug/l	Diluted Concentration [2] using the 50th percentile average flow ug/l	Diluted Concentration [3] using the 50th percentile low flow ug/l	EPA Ambient Water Quality Criteria For the Protection of Freshwater Aquatic Life	
				Acute [4] ug/l	Chronic [5] ug/l
Arsenic	0.01	0	0	440	NCA
Beryllium	0.04	0	0	130*	5.3*
Cadmium	0.25	0	0	3.0	0.025
Chromium (Tri.)	107.79	0.01	0.22	4700	44*
Chromium (Hex.)	7.73	0	0.02	21	0.29
Copper	9.85	0	0.02	22	5.6
Cyanide	45.46	0	0.09	52	3.5
Lead	5.15	0	0.01	170	3.8
Mercury	0.88	0	0	4.1	0.2
Nickel	3.39	0	0.01	1800	96
Selenium	17.19	0	0.03	260	35
Silver	0.04	0	0	4.1	0.12*
Thallium	3.21	0	0.01	1400*	40*
Zinc	104.6	0.01	0.21	320	47
Chloroform	3.1	0	0.01	28900*	1240*
Benzene	2.3	0	0	5300*	NCA
Toluene	10.1	0	0.02	17500*	NCA

1.6 Diluted Effluent Concentrations From Direct Dischargers in the Petroleum Refining Industry Compared to the EPA Ambient Water Quality Criteria for the Protection of Freshwater Aquatic Life (Continued)

Pollutant	Current/BPT [1] Flow-weighted Avg. Conc. ug/l	Diluted Concentration [2] using the 50th percentile average flow ug/l	Diluted Concentration [3] using the 50th percentile low flow ug/l	EPA Ambient Water Quality Criteria For the Protection of Freshwater Aquatic Life	
				Acute [4] ug/l	Chronic [5] ug/l
2,4-Dichlorophenol	0.22	0	0	2020*	365*
p-Chloro-m-Cresol	0.28	0	0	290*	NCA
Dimethyl phthalate	0.15	0	0	33000*	NCA
Diethyl phthalate	1.46	0	0	52100*	NCA
Di-n-butyl phthalate	0.04	0	0	940*	NCA
Acenaphthene	1.06	0	0	1700*	NCA
Benzo(a)pyrene	0.05	0	0	NCA	NCA
Chyrsene	0.02	0	0	NCA	NCA
Phenanthrene	0.18	0	0	NCA	NCA
Pyrene	0.12	0	0	NCA	NCA

Footnotes:

[1]Derived by multiplying the average concentration by the flow for each of the 17 refineries sampled. The sum of the products divided by the total flow of the refineries sampled results in a flow-weighted average concentration.

[2]Derived by dividing the flow-weighted average concentration by the 50th percentile average flow dilution factor. The 50th percentile (15127) corresponds to the median average flow dilution factor. Flow data were available for 43 of the 164 refineries. Diluted concentration values less than 0.01 ug/l are reported as zero.

[3]Derived by dividing the flow-weighted average concentration by the 50th percentile low flow dilution factor. The 50th percentile (496) corresponds to the median low flow dilution factor. Flow data were available for 32 of the 164 refineries. Diluted concentration values less than 0.01 ug/l are reported as zero.

[4]Acute - The maximum concentration of a pollutant allowed at any time to protect freshwater organisms.

[5]Chronic - The 24-hour average concentration of a pollutant to protect freshwater organisms.

*Lowest reported toxic concentration to protect freshwater organisms. Reported when no other criteria are available.

NCA - No criteria available.

SECTION IX

NEW SOURCE PERFORMANCE STANDARDS

SUMMARY

New source performance standards (NSPS) are equivalent to the existing NSPS promulgated on May 9, 1974 (39 FR 16560) which were upheld by the United States Court of Appeals in American Petroleum Institute v. EPA, 540 F.2d 1023 (10th cir. 1976).

NSPS require a reduction in pollutant load based upon BPT in-plant and end-of-pipe treatment plus a 25 to 50 percent wastewater flow reduction (depending upon subcategory). BPT in-plant technology consists of widely used control practices such as ammonia and sulfide control, elimination of once-through barometric condenser water, segregation of sewers, and elimination of polluted once-through cooling water. BPT end-of-pipe technology consists of flow equalization, initial oil and solids separation (API separator or baffle plate separator), further oil and solids separation (clarifier or dissolved air flotation), biological treatment, and filtration or other "polishing" steps. NSPS use the flow model developed for the 1974 regulation to calculate pollutant loadings.

NSPS regulate the discharge of the following conventional, nonconventional and toxic pollutants from new refineries, which include BOD_5, TSS COD, oil and grease, total phenols (4AAP), ammonia(N), sulfide, total chromium, hexavalent chromium, and pH.

A "new source" is a new refinery ("greenfield site") or a modification to an existing plant which is extensive enough to be "substantially independent" of an existing source. For example, as stated in the preamble to the proposed criteria for new source determinations, 45 FR 59343 (September 9, 1980) the addition of a structurally separate cracking unit at the site of an existing refinery that processes crude oil by the use of topping and catalytic reforming would be considered a modification of the existing source and not a new source, because the cracking unit would not be a substantially independent process.

New Source performance standards are equal to existing NSPS; this is Option 4 of the four options considered by EPA in this study.

Instructions for calculating effluent limitations and mass limitation factors for each subcategory are in Section I.

The basis for new source performance standards (NSPS) under Section 306 of the Act is the best available demonstrated technology (BADT). New plants have the opportunity to design the best and most efficient petroleum refining processes and wastewater treatment technologies; Congress therefore directed

EPA to consider the best demonstrated process changes, in-plant controls, and end-of-pipe treatment technologies capable of reducing pollution to the maximum extent feasible.

NSPS OPTIONS CONSIDERED

EPA considered four control and treatment options for the final new source performance standards. Options 1 and 2 were considered in formulating the proposed rule and were based upon the flow model for the proposed 1979 regulations. Option 4, the existing NSPS level of control, was reconsidered after publication of the proposed rule as a result of the public comments and is based upon the 1974 flow model.

Option 1 - Discharge flow reduction to 52 percent below model flow (flow model for 1979 proposal), achieved through greater reuse and recycle of wastewaters, in addition to BPT treatment. This Option is equivalent to BAT Option 2.

Option 2 - Discharge flow reduction to 27 percent below model flow (flow model for 1979 proposal), achieved through greater reuse and recycle of wastewaters in addition to BPT treatment, plus use of granular activated carbon to reduce residual organic toxic pollutants. This option is equivalent to BAT Option 5.

Option 3 - Zero discharge of wastewater pollutants.

Option 4 - Discharge flow reduction from 25 percent to 50 percent below BPT model flow, depending upon subcategory, achieved through greater reuse and recycle of wastewaters in addition to BPT treatment. This option is the basis for the existing NSPS regulation, including the 1974 flow model upon which the existing NSPS is based.

NSPS Option 1 - Effluent flow reduction to 52 percent below model flow (flow model for 1979 proposal) plus BPT treatment is equivalent to BAT Option 2. The technology for this option is the same as that for the existing NSPS regulations - wastewater recycle and reuse technologies, in addition to BPT end-of-pipe treatment.

The Agency compared effluent reductions achievable by existing NSPS and this option. This comparison concluded that effluent reductions are comparable to the 1974 NSPS. The analysis was performed on a model greenfield new source refinery (190,000 bbl/day, cracking) which is classified as a "Subcategory B" refinery as defined by the existing regulation. This model refinery was configured to correspond with demand growth as published by the Department of Energy (see the Economic Analysis document). The costs to implement this option are comparable to the existing NSPS (see Appendix A). Nonwater quality environmental impacts and energy requirements are also similar to existing NSPS.

Since the costs, pollutant removals, energy and environmental effects are comparable there would be no significant benefit in adopting a regulation equivalent to BAT Option 2 (or BAT Option 7 which incorporates the refined flow model).

NSPS Option 2 - Effluent flow reduction to 27 percent below model flow (flow model for 1979 proposal) plus BPT technology and granular activated carbon (GAC) to remove residual organic toxic pollutants. NSPS Option 2 is equivalent to BAT Option 5, which is also based on GAC end-of-pipe technology.

A major proportion of the cost of GAC treatment is annual operating expense which will be similar for a new plant and for an existing plant. A new refinery will not incur the retrofit cost of flow reduction associated with BAT Option 5, however, the new refinery will sustain the capital costs of GAC technology plus annual operating costs. Estimates of these costs are shown in Appendix A.

For the reasons stated in the proceeding discussion on BAT Option 5, the Agency believes that GAC treatment is not demonstrated technology for this industry.

NSPS Option 3 - Zero discharge of pollutants is a demonstrated technology. However, the technology employed and the associated costs are very site-specific. This technology is now practiced by about 55 refineries in the United States where conditions of climate and geology make zero discharge attractive.

The Agency estimated the pollutant removal benefits which would accrue over and above existing NSPS for a typical 150,000 bbl/day refinery of the cracking subcategory. Daily pollutant removals would be 2.46 lb/day phenol, 3.9 lb/day hexavalent chromium, 6 lb/day total chromium, 308 lb/day TSS and 381 lb/day BOD.

Section VII and the discussion on BAT Option 6 describe technologies such as vapor compression distillation and deep well injection which are available, but which have other cost, energy and environmental affects that must be considered for an industry wide regulation. Unlike BAT Option 6, a newly constructed refinery can be designed to incorporate zero discharge during construction. However, annual operating costs remain high at sites which do not have favorable conditions.

The Agency reported a costing method for incorporating zero discharge into the construction of a typical new refinery as described by the American Petroleum Institute. The capital and annual costs for a typical petroleum refinery producing 150,000 barrels/day are estimated to be $11.6 million and $4.6 million (1979 dollars), respectively. The industry indicated in their comments that the energy consumed would cost $2,000,000 per year; they also stated that 7,300 tons per year of solid waste would be

generated. EPA believes that the energy and solid waste estimates from the industry are reasonable approximations.

While the Agency proposed zero discharge for NSPS in 1979, after careful re-examination of the combined effects associated with NSPS Option 3, EPA has rejected this proposal because:

1. it generates significant adverse non-water quality related impacts, including the production of large amounts of solid waste and high energy consumption;

2. the cost of achieving zero discharge is estimated to be extremely high, especially in geographical areas of low evapotranspiration which requires energy intensive forced evaporation techniques;

3. only marginal additional water pollution reduction benefits would be achieved beyond the existing NSPS.

4. the high costs of implementation could raise serious barriers to any decision invovling construction of a new source refinery.

NSPS Option 4 - Effluent flow reduction to 25 to 50 percent below model flow (flow model for 1974 regulation) plus BPT technology is equivalent to the existing NSPS. Flow reduction of from 25 to 50 percent of average BPT flow, depending upon subcategory, would be achieved by recycle and reuse technology.

Implementation of Option 4 would not cause the petroleum refining industry to incur any additional expense beyond the cost of meeting the current regulations for new direct discharge.

After careful consideration of the options proposed in 1979, together with the public comments received, the Agency finds no reason for revising current NSPS.

IDENTIFICATION OF NEW SOURCE PERFORMANCE STANDARDS

EPA is retaining the existing NSPS which are based on recycle and reuse technology resulting in pollutant reductions that range from 25 to 50 percent beyond BPT removals, depending upon the subcategory. Regulated pollutants for NSPS are BOD_5, total suspended solids, chemical oxygen demand, oil and grease, total phenols (4AAP), ammonia (N), sulfide, total chromium, hexavalent chromium, and pH.

New greenfield refineries are not expected to be built between now and 1990. Existing refineries, however, may be modified to accommodate the heavier and higher sulfur crudes which are becoming increasingly prevalent in the current oil market. The change could cause certain refineries, or parts of refineries, to be considered new sources. However, it is unlikely that the

modification would be extensive enough so that the existing refinery would be reclassified as a new source.

SECTION X

PRETREATMENT STANDARDS FOR EXISTING AND NEW SOURCES

Summary

PSES - Pretreatment Standards for Existing Sources

Interm final PSES were promulgated by the Agency on March 23, 1977 (42 FR 15684) and are currently in effect. Regulated pollutants are oil and grease (100 mg/L) and ammonia (N) (100 mg/L) each on a daily maximum basis. EPA is retaining the existing PSES regulation, with one modification. An alternative mass limitation for ammonia (N) is provided for those indirect dischargers whose discharge to the POTW consists solely of sour waters. PSES is equivalent to Option 3 of the three technology options considered by the Agency for pretreatment standards.

PSNS - Pretreatment Standards for New Sources

PSNS were promulgated by the Agency on May 9, 1974 (39 FR 16560) and are currently in effect. Pretreatment standards for incompatible pollutants are equivalent to NSPS. Final PSNS are equivalent to pretreatment standards for existing sources (PSES), except that they also regulate total chromium at the equivalent of 1 mg/L for the cooling tower discharge part of the refinery flow to the POTW. An alternative mass limitation for ammonia (N) is also provided, as described above for PSES. PSNS is equivalent to Option 1 of the two technology options considered by the Agency for pretreatment standards for new sources.

A new indirect discharging refinery of the size and configuration likely to be built in the 1980's would incur additional capital costs of $0.37 million and an annual cost of $0.26 million (1979 dollars) beyond the cost of complying with existing PSNS.

Section 307(b) of the Act requires EPA to promulgate pretreatment standards for both existing sources (PSES) and new sources (PSNS) that discharge pollutants into publicly owned treatment works (POTW). PSES are designed to prevent the discharge of pollutants that pass through, interfere with, or are otherwise incompatible with the operation of the publicly owned treatment works (POTW). They must be achieved within three years of promulgation. The legislative history of the 1977 Act indicates that pretreatment standards are to be technology-based, analogous to the best available technology for removal of toxic pollutants. The general pretreatment regulations, which served as the framework for the categorical pretreatment regulations are found in 40 CFR Part 403 (43 FR 27736, June 26, 1978; 44 FR 9462, January 28, 1981) (also see Section I).

The Clean Water Act of 1977 requires pretreatment for toxic pollutants that pass through the POTW in amounts that would violate direct discharger effluent limitations or interfere with the POTW's treatment process or chosen sludge disposal method. EPA has generally determined that there is pass through of pollutants if the percent of pollutants removed by a well-operated POTW achieving secondary treatment is less than the percent removed by the BAT model treatment system.

Like PSES, PSNS are to prevent the discharge of pollutants which pass through, interfere with, or are otherwise incompatible with the operation of the POTW. PSNS are to be issued at the same time as NSPS. New indirect dischargers, like new direct dischargers, have the opportunity to incorporate the best available demonstrated technologies. The Agency considers the same factors in promulgating PSNS as it considers in promulgating PSES.

Pollutants Not Regulated

The toxic pollutants listed in Table VI-9 were detected in petroleum refinery waste streams that are discharged to POTW. The Agency has decided not to establish PSES for these toxic pollutants in this industry for the following reasons:

The pollutants listed in Part I and Part II of Table VI-9 are excluded from national regulation in accordance with Paragraph 8 of the Settlement Agreement because they were either found to be susceptible to treatment by the POTW and do not interfere with, pass through, or are not otherwise incompatible with the POTW, or the toxicity and amount of incompatible pollutants were insignificant.

The pollutants listed in Part III of Table VI-9 are excluded from regulation for a combination of reasons. First, there is significant removal of some of these pollutants by the existing pretreatment standards for oil and grease. Second, there is significant removal of all these pollutants by the POTW treatment system. Third, the amount and toxicity of these pollutants does not justify developing national pretreatment standards.

The Agency did not propose requiring installation of BPT-type treatment on an industrywide basis for indirect dischargers.

PRETREATMENT OPTIONS CONSIDERED

EPA considered three control and treatment options for pretreatment standards for existing sources and two options for pretreatment standards for new sources. Options 1 and 2 were considered in formulating the proposed rule. As a result of public comments received, an alternative mass limitation for ammonia was added to Option 1 after proposal of the regulation. Option 3, the existing PSES level of control, was reconsidered

after publication of the proposed rule. Option 3 also contains an alternative mass limitation for ammonia (N).

Option 1 - Chromium reduction by pH adjustment, precipitation and clarification technologies applied to segregated cooling tower blowdown, plus control of oil and grease and ammonia at the existing PSES level of control.

Option 2 - Establishment of two sets of pretreatment standards. The first would be Option 1 control for refineries discharging to POTW with existing or planned secondary treatment. The second would be Option 1 control plus treatment for total phenols by biological treatment for those refineries discharging to a POTW that has been granted a waiver from secondary treatment requirements under Section 301(h) of the Act. EPA's proposed pretreatment standards for existing sources were based on this option. Further discussion is provided in the 1979 proposed petroleum refining regulation at 44 FR 75935.

Option 3 - Reduction of oil and greases and ammonia by oil/water separation and steam stripping technologies.

Evaluation of Pretreatment Options Considered

Option 1 - Reduce chromium in cooling tower blowdown to 1 mg/L by pH adjustment, precipitation, and clarification, and maintain control of oil and grease and ammonia (N) at existing (PSES) level of control (100 mg/L). Include alternative mass limitations for ammonia (N) for those refineries that discharge only sour waters to the POTW.

For the 1979 proposal, the Agency estimated the cost of retrofitting the affected indirect discharge refineries at an initial investment of $11.7 million and an annual cost of $6.8 million (1979 dollars). These estimates assume that cooling tower waste streams are readily identifiable and separable for all refineries (see Appendix A).

This option presumes the industrywide ability to segregate, collect, and separately treat cooling tower blowdown, the major source of chromium for this industry. The wastewater recycle/reuse study (see Section VII), completed after publication of the proposed regulation, concluded that, for existing sources, it is not technologically feasible, in many instances, to segregate cooling tower blowdown for chromium treatment. Cooling tower blowdown is typically effected at numerous locations throughout a refinery. Extensive collection systems would be necessary at many refineries to collect all blowdown streams for separate treatment. In addition, not all cooling tower blowdown streams are collectable. For instance, cooling water when used as makeup for refinery processing

commingles with process water and cannot be traced or segregated, especially in older refineries.

An alternative, treatment of the combined refinery waste stream for chromium removal, would require installation of most, if not all, of the BPT treatment train. Installation of BPT treatment for all existing indirect dischargers would cost an estimated $110 million in capital costs, and an annual cost of $42 million (1979 dollars). This estimate represents the maximum cost estimated by assuming installation of BPT treatment for all indirect dischargers (See Option 2).

New refineries have the opportunity to design separation of cooling tower waste streams into the system and do not incur retrofit costs or the cost of treating combined waste streams. Separate treatment of cooling tower blowdown may be readily applied by new source indirect dischargers. The Agency estimated the incremental cost of incorporating Option 1 technology in a new source at an annual investment of $0.37 million and an annual cost of $0.26 million (1979 dollars) (see Appendix A).

Option 2 - Establish two sets of criteria; one for refineries that discharge to POTW with existing or planned secondary treatment, and one for refineries that discharge to POTW which have received a Section 301(h) waiver.

Under Section 301(b)(1)(B) of the Act, most POTW should have installed secondary treatment by July 1, 1977. However, two groups of POTW have not yet met this requirement. One group remains subject to that obligation and contains POTW that are scheduled to install secondary treatment within the next few years. A second group of POTW is exempt from the requirement to install secondary treatment under Section 301(h) of the Act.

A determination of which pollutants may pass through or be incompatible with POTW operations, and thus be subject to pretreatment standards, depends on the level of treatment used by the POTW. Applicants for Section 301(h) waivers have treatment systems which vary from primary to primary plus partial secondary. In general, more pollutants pass through or interfere with a POTW using primary treatment (usually physical separation by settling), as compared with one that has installed secondary treatment (settling plus biological stabilization) (see Section V).

Under Option 2, existing refineries that disharge to POTW which have or will provide secondary treatment would provide treatment equivalent to Option 1 (100 mg/L limit on oil and grease and ammonia (N) plus 1 mg/L on chromium applied to segregated cooling tower blowdown). Refineries that discharge to POTW which have a section 301(h) waiver would be required to provide treatment for oil and grease, ammonia (N), and chromium plus treatment for

total phenols. Treatment for total phenols (4AAP) would require the addition of BPT end-of-pipe treatment.

Total cost of implementing Option 2 for existing indirect dischargers could not be calculated for the 1979 proposal, since no POTW had yet been granted a Section 301(h) waiver. The Agency did estimate the cost of installing biological treatment for each indirect discharge refinery. The Agency also estimated the cost of installing Option 1 treatment technology for each indirect discharging refinery. There was no determination of which of the refineries would ultimately discharge to POTW with secondary treatment versus those that would discharge to POTW with Section 301(h) waivers. However, if all indirect discharging refineries were required to install biological (BPT end-of-pipe) treatment systems, the maximum cost to the industry would be an initial capital investment of $110 million and an annual cost of $42 million (1979 dollars) (Appendix A).

Option 2 was proposed in the December 1979 regulation. The rationale was that a POTW with a primary treatment system will not adequately remove the toxics from the refinery. A POTW with primary treatment that receives waste from refineries was sampled. The results indicated that removal effectiveness is significantly less than that of a secondary system (see Appendix B - Raw Plant Data).

There are currently three POTW which recieve refinery wastes that can apply for Section 301(h) variances. In order to obtain a 301(h) variance, the POTW must be able to demonstrate that:

- The discharge will not interfere with the attainment or maintenance of water quality which assures the protection of public water supplies and the protection and propagation of a balanced, indigeneous population of shellfish, fish and wildlife and allows recreational activities, in and on the water, (Section 301(h)(2);

- The POTW has a monitoring system to measure, to the extent practicable, the impact of the discharge on a representative sample of aquatic biota, (Section 301(h)(3);

- The discharge will not impose additional requirements on any other point or nonpoint source, (Section 301(h)(4);

- All applicable pretreatment standards are enforced, (Section 301(h)(5);

- The POTW, to the extent possible, has established a schedule of activities designed to eliminate the entrance of toxic pollutants from non-industrial sources into the treatment works, (Section 301(h)(6));

- There will be no substantial increase in the volume of discharged pollutants to which the modification applies from the treatment works.

The degree of treatment required for a POTW obtaining a Section 301(h) waiver is determined after evaluating, among other things, the physical characteristics of the discharge and the nature of the receiving waters. Treatment levels vary for every POTW because of the importance of these site-specific factors; thus, the levels of toxic pollutants which pass through will also vary significantly in each case.

EPA now believes that it is not feasible and that it would be inappropriate to establish national pretreatment standards that take into account whether a discharger uses a POTW which has received a 301(h) waiver. Rather, the need for more rigorous pretreatment controls should be resolved on a case-by-case basis during the Section 301(h) waiver process, depending on the degree of the toxic pollutant problems in each instance.

Option 3 - Reduce oil and grease and ammonia by oil/water separation and steam stripping technologies. This option is equivalent to existing PSES except that an alternate mass limitation for ammonia is provided for ammonia (N) for those refineries that discharge only sour waters to the POTW. Regulated pollutants are oil and grease and ammonia (N) (100 mg/L), each on a daily maximum basis.

Option 3 does not limit the concentration of chromium in the effluent of indirect dischargers. At the time of proposal, the Agency believed such concentrations of chromium would limit a POTW's use or management alternatives of the sludge. Based upon review of existing information and analysis of public comments on the proposal, EPA has determined that this rationale is not valid on a nation wide basis. For this industry, chromium levels in sludge from POTW receiving petroleum refinery wastes generally do not impact sludge disposition or alternatives for use. There are no Section 405 sludge standards directed at concentrations of chromium in the sludge. Therefore, EPA has determined that the better approach is to permit the POTW to establish chromium pretreatment standards for existing sources if refinery waste would limit their sludge disposal alternatives. The general pretreatment regulations specifically provide the POTW with this authority. (See 40 CFR 403.5).

This option is the basis for the existing interim final PSES regulation. An alternative mass limitation for ammonia (N) is provided to those indirect dischargers whose discharge to the POTW consists solely of "sour waters. Sour waters generally result from water brought into direct contact with a hydrocarbon stream, and contains sulfides, ammonia and phenols. The Agency developed an alternative mass limitation for ammonia in response to public comments received on the proposed regulation. Several

commenters indicated that, when the refinery discharge to the POTW consists solely of sour waters, achievement of the 100 mg/L ammonia concentration limitation is often not possible. This is because steam stripping technology, the basis for the limitations, cannot consistently reduce ammonia in sour water streams to the 100 mg/L level. Thus, an equivalent mass limitation for ammonia was developed by the Agency.

IDENTIFICATION OF PRETREATMENT STANDARDS

PSES - EPA has selected Option 3, retention of the existing level of control, for final regulation of existing indirect discharge refineries. Option 1 was rejected because the Agency found it infeasible in many instances to segregate cooling tower blowdown for chromium treatment on an industrywide basis for existing refineries. Option 2 was rejected on the basis that it would be inappropriate to establish separate national pretreatment standards for those refineries that discharge to POTW which have a Section 301(h) waiver because the conditions surrounding those installations are very site specific and can be better evaluated by the individual POTW. The general pretreatment regulations specifically provide POTW with authority to institute standards for pretreatment of industrial discharges which limit sludge disposal options.

PSNS - The Agency has selected Option 1 for the regulation of new sources. Segregation and separate treatment of cooling tower blowdown can be implemented with little additional expense in the design and construction of new refineries. Option 2 was rejected for the same reasons discussed under PSES.

SECTION XI

ACKNOWLEDGMENTS

Many individuals representing numerous organizations, corporations, and agencies have contributed material, time and energy to the technical studies conducted in developing these effluent limitations guidelines and standards, and to the production of this document.

This document was prepared under the direction of Mr. Dennis Ruddy and Mr. John Lum, Project Officers in the Energy and Mining Branch of EPA's Effluent Guidelines Division. Mr. William A. Telliard, Chief of the Energy and Mining Branch, also provided direction and assistance during the course of the program.

The Agency wishes to acknowledge the contributions to this project of Burns and Roe Industrial Services Corporation of Paramus, New Jersey under the direction of Mr. Arnold S. Vernick, Manager of Environmental Engineering, and Mr. Elwood C. Walker, Program Director.

The cooperation and assistance of the American Petroleum Institute and of the numerous company and refinery personnel who were involved in data gathering efforts, site studies, and wastewater sampling programs are greatly appreciated. The Agency's Robert S. Kerr Environmental Research Laboratory, all EPA regional offices, and the County Sanitation Districts of Los Angeles are specifically acknowledged for their efforts.

Appreciation is expressed to those at EPA Headquarters who contributed to the completion of this project, including Mr. Jeffery Denit of the Effluent Guidelines Division; Ms. Eleanor Zimmerman of the Monitoring and Data Support Division; Mr. Louis DuPuis, Mr. John Kukulka, and Mr. Henry Kahn of the Office of Analysis and Evaluation; and Ms. Susan Lepow and Mr. Mark Gordon of the Office of General Counsel.

SECTION XII

REFERENCES

1. American Petroleum Institute, "Petroleum Industry Raw Waste Load Survey," December 1972.

2. American Petroleum Institute, Disposal of Refinery Wastes - Manual, Volume of Liquid Wastes, Washington, DC, 1969.

3. Development Document for Effluent Limitations Guidelines and New Source Performance Standards for Petroleum Refining, EPA-440/1-74-014a, April 1974, Environmental Protection Agency, Washington, DC.

4. Bush, K. E., "Refinery Wastewater Treatment and Reuse," Chemical Engineering, April 12, 1976.

5. Wigren, A. A. and Burton, F. L., "Refinery Wastewater Control," Journal Water Pollution Control Federation, Vol. 44, No. 1, January 1972.

6. Armstrong, T. A., "There's a Profit in Processing Foul Water," The Oil and Gas Journal, pp. 96-98, June 17, 1968.

7. Easthagen, J.H. et al., "Development of Refinery Waste Water Control at Pascagoula, Mississippi," Journal Water Pollution Control Federation, Vol. 37, No. 12, December 1965.

8. Beychock, M. R., Aqueous Wastes from Petroleum and Petrochemical Plants, John Wiley & Sons, New York, 1967.

9. Klett, R. J., "Treat Sour Water for Profit," Hydrocarbon Processing, pp. 98-99, October, 1972.

10. Brunet, M. J. and Parsons, R. H., "Mobil Solves Fouling Problem Sour Water Stripper," The Oil and Gas Journal, pp. 62-64, November 20, 1972.

11. "Phenols in Refinery Waste Water Can Be Oxidized With Hydrogen Peroxide," The Oil and Gas Journal, pp. 84-86, January 20, 1975.

12. Short, T. E., Jr., et al., "Controlling Phenols in Refinery Waste Waters," The Oil and Gas Journal, pp. 119-124, November 25, 1974.

13. Congram, G. E., "Refiners Zero In on Better Desalting," The Oil and Gas Journal, pp. 153-154, December 30, 1974.

14. Beychock, M. R., "Wastewater Treatment," Hydrocarbon Processing, pp. 109-112, December 1974.

15. Ewing, R. C., "Modern Waste-Treatment Plant on Stream in Texaco Refinery," The Oil and Gas Journal, pp. 66-69, September 28, 1970.

16. "New Ion-Exchange System Treats Sour Water," The Oil and Gas Journal, pp. 88-89, February 11, 1971.

17. Pollio, F. X. and Kunin, R., "Ion Exchange Resins Treat Sour Water," The Oil and Gas Journal, pp. 126-130, May 19, 1969.

18. Melin, G. A. et al., "Optimum Design of Sour Water Strippers," Chemical Engineering Progress, Vol. 71, No.6, June, 1975.

19. Contrell, A., "Annual Refining Survey," The Oil and Gas Journal, pp. 125-152, March 29, 1976.

20. Gantz, R. G., "API - Sour Water Stripper Studies," Proceedings American Petroleum Institute, Section III Refining, Vol. 54, pp. 39-66, 1975.

21. Short, T.E. et al., "Petroleum Refining Phenolic Wastewaters," American Chemical Society, Div. of Fuel Chemistry, paper presented at 168th National Meeting, September 8-13, 1974.

22. Norwood, B. E., "Application of Biological Trickling Filter for Treatment of Effluent Water at Shell Oil Company's Houston Refinery," paper presented at the Petroleum and Petrochemicals Session of the National Pollution Control Exposition and Conference, April 4-5, 1968.

23. Congram, G. E., "Biodisk Improves Effluent-Water-Treating Operation," The Oil and Gas Journal, February 23, 1976.

24. 1972 Sour Water Stripping Survey Evaluation, Publication No. 927, prepared for American Petroleum Institute, Washington, DC, June 1972.

25. Annessen, R. J. and Gould, G. D., "Sour Water Processing Turns Problem Into Payout," Chemical Engineering, pp. 67-69, March 22, 1971.

26. Analysis of the 1972 API-EPA Raw Waste Load Survey Data, Brown & Root, Inc., API publication No. 4200, July 1974.

27. Diehl, D. S. et al., "Effluent Quality Control at a Large Oil Refinery," Journal Water Pollution Control Federation, Vol. 43, No. 11, p. 2254, November 1971.

28. Sour Water Stripping Project, Committee on Refinery Environmental Control, American Petroleum Institute, prepared by Environmental Services Department, Bechtel Corporation, API publication No. 946, June 1975.

29. Engineering Science, Inc., Petroleum Refining Industry, Technology and Costs of Wastewater Control, prepared by the National Commission on Water Quality, June 1975.

30. "Granular Media Filtration of Petroleum Refinery Effluent Waters," prepared by Envirotech Corporation, EIMCO BSP Division, for the American Petroleum Institute, API publication No. 947, October 1975.

31. Economics of Refinery Waste Water Treatment, prepared by Brown & Root, Inc., prepared for the American Petroleum Institute, API publication No. 4199, August 1973.

32. Economic Impact of EPA's Regulations on the Petroleum Refining Industry, prepared by Sobotka & Company, Inc, for the U.S. Environmental Protection Agency, April 1976.

33. Mitchell, G. E., "Environmental Protection - Benecia Refinery," prepared for the API 35th Midyear Meeting, Division of Refining, Houston, May 1970.

34. Ewing, R. C., "Shell Refinery Uses Pollution-Abatement Units," The Oil and Gas Journal, March 8, 1971.

35. Aalund, L. A., "Cherry Point Refinery - A Story of Air, Water, and Fuel," The Oil and Gas Journal, January 24, 1972.

36. Maguire, W. F., "Reuse Sour Water Stripper Bottoms," Hydrocarbon Processing, pp. 151-152, September, 1975.

37. State and Local Pretreatment Programs - Federal Guidelines, January 1977, U.S. Environmental Protection Agency, Washington, D.C.

38. Refinery Effluent Water Treatment Plant Using Activated Carbon, June 1975, U.S. Environmental Protection Agency, EPA-660/2-75-020.

39. Assessment of Hazardous Waste Practices in the Petroleum Refining Industry, prepared by Jacobs Engineering Co,

for the Environmental Protection Agency, June 1976, Contract No. 68-01-2288.

40. Report to Congress - Disposal of Hazardous Wastes, U.S. Environmental Protection Agency, Publication No. SW-115, 1974.

41. Elkin, H. F., "Biological Oxidation and Reuse of Refinery Wastewater for Pollution Control and Water Conservation," Division of Refining, Vol. 36, No. III, p. 340, 1956.

42. Elkin, H. F. et al., "Biological Oxidation of Oil Refinery Wastes in Cooling Tower Systems," Sewage & Industrial Wastes, Vol. 28, No. 12, p. 1475, December 1956.

43. Mohler, E. F., et al., "Experience with Reuse and Bio-oxidation of Refinery Wastewaters in Cooling Towers," Journal Water Pollution Control Federation, Vol. 36, No. 11, p. 1380, November 1964.

44. Wiley, M. A., "Chromium Analysis", API Proceedings, Holiday Inn, Arlington, VA, May 25 and June 11, 1973.

45. "Coastal Water Research Project," Southern California Coastal Water Research Project (SCCWRP), 1500 E. Imperial Highway, El Segundo, CA 90245, Annual Report, June 1975.

46. "Environmental Effect of Disposal of Municipal Wastewater in Open Coastal Waters," Southern California Coastal Water Research Project (SCCWRP), 1500 E. Imperial Highway, El Segundo, CA 90245, August 1975.

47. Donaldson, W. T., "Trace Organics in Water," Environmental Science and Technology, Vol. 11 No. 4, April, 1977.

48. Interim Final Supplement for Pretreatment to the Development Document for the Petroleum Refining Industry, Existing Point Source Category, U.S. Environmental Protection Agency EPA 400/1-76/083a, March 1977.

49. Davis, J. C., "Activated Carbon: Prime Choice to Boost Secondary Treatment," Chemical Engineering, April 11, 1977, pp. 81-83.

50. Grutsch, J. F. and Mallatt, R. C., "A New Perspective on the Role of the Activated Sludge Process and Ancillary Facilities," presented at the Open Forum on Management of Petroleum Refinery Wastewaters, January 26-29, 1976.

51. Gould, J. P. and Weber, W. J., "Oxidation of Phenols by Ozone," Journal Water Pollution Control Federation, Vol. 48, No. 1, January 1976.

52. Zogorski, J. S. and Faust, S.D., "Removing Phenols via Activated Carbon," Chemical Engineering Progress, pp. 65-66, May 1977.

53. Gesick, J. A., "A Comparative Study of Non-Chromate Cooling Water Corrosion Inhibitors," presented at the 35th Annual International Water Conference of the Engineers' Society of Western Pennsylvania, October 31, 1974.

54. Zecher, D. C., "Corrosion Inhibition by Surface - Active Chelants," presented at the International Corrosion Forum, Toronto, Canada, April 14-18, 1975.

55. Robitaille, D. R. and Bilek, J. G., "Molybdate Cooling-Water Treatments," Chemical Engineering, December 20, 1976.

56. Bush, K. E., "Refinery Wastewater Treatment and Reuse," Chemical Engineering, April 12, 1976.

57. Mohler, E. F., Jr., and Clere, L. T., "Development of Extensive Water Reuse and Bio-Oxidation in a Large Oil Refinery," Complete Water Reuse, American Institute of Chemical Engineers, Library of Congress Catalog No. 73-87964, based on papers presented at the National Conference on Complete Water Reuse, April 23-27, 1973.

58. Mohler, E. F., Jr., and Clere, L. T., "Sun Oil Develops Water Reuse Program," The Oil and Gas Journal, September 10, 1973.

59. Crame, L. W., "Activated Sludge Enhancement: A Viable Alternative to Tertiary Carbon Adsorption," presented at the Open Forum on Management of Petroleum Refining Wastewater, June 6-9, 1977.

60. Grieves, C. G. et al., "Powdered Activated Carbon Enhancement of Activated Sludge for BATEA Refinery Wastewater Treatment," presented at the Open Forum on Management of Petroleum Refinery Wastewater, June 6-9, 1977.

61. Heath, H. W., Jr., "Combined Powdered Activated Carbon - Biological ("PACT") Treatment of 40 MGD Industrial Waste," presented at Symposium on Industrial Waste Pollution Control at A.C.S. National Meeting, March 24, 1977.

62. Dehnert, J. F., "Case History - The Use of Powdered Activated Carbon With a Biodisc-Filtration Process for Treatment of Refinery Wastes," presented at the Open Forum on Management of Petroleum Refinery Wastewater, June 6-9, 1977.

63. Zanitsch, R. H., and Lynch, R. T., "Granular Carbon Reactivation: State-of-the-Art," presented at the Open Forum on Management of Petroleum Refinery Wastewater, June 6-9, 1977.

64. Process Design Manual for Carbon Adsorption, Environmental Protection Agency Technology Transfer, October 1973.

65. Ford, D.L. and Tischler, L. F., "Meeting BPT Standards for Refinery Wastewater Treatment," Industrial Wastes, July/August 1977.

66. Proceedings of the 1972 National Conference on Control of Hazardous Materials Spills, University of Houston, March 21-23, 1972.

67. Spill Prevention Techniques for Hazardous Pollution Substances, prepared by Arthur D. Little, Inc., for the U.S. Environmental Protection Agency, February 1971, Contract No. 14-12-927.

68. Industrial Process Profiles for Environmental Use, "Chapter 3 - Petroleum Refining Industry," prepared by Radian Corporation, for the U.S. Environmental Protection Agency, EPA-600/2-77-023c, January 1977.

69. Rizzo, J. L. and Shepard, A. R., "Treating Industrial Wastewater with Activated Carbon," Chemical Engineering, January 3, 1977.

70. DeWall, F.B. et al., "Organic Matter Removal by Powdered Activated Carbon Added to Activated Sludge," Journal Water Pollution Control Federation, April 1977.

71. Thibault, G. T. et al., "PACT Performance Evaluated," Hydrocarbon Processing, May 1977.

72. Lanouette, K. H. and Paulson, E. G., "Treatment of Heavy Metals in Wastewater," Pollution Engineering, October 1976.

73. Petroleum Refineries in the United States and Puerto Rico, Mineral Industry Bureau of Mines, January 1, 1977. Surveys, Washington, D.C., U.S. Department of the Interior,

74. Petroleum Refineries in the United States and Puerto Rico, Washington, D.C., National Petroleum Refiners Association, July 22, 1977.

75. Sampling and Analysis Procedures for Screening of Industrial Effluents for Priority Pollutants, U.S. Environmental Protection Agency, Cincinnati, OH, April 1977.

76. Preliminary Industry Profile Data, prepared by Burns and Roe Industrial Services Corporation, for the U.S. Environmental Protection Agency, Effluent Guidelines Division, December 30, 1976.

77. "Worldwide Directory, Refining and Gas Processing, 1976-1977," The Oil and Gas Journal, 34th Edition, 1976.

78. S-1, Analysis of Self Reporting Data From Refineries To Determine Compliance with July 1, 1977 Effluent Limitations, prepared by Burns and Roe Industrial Services Corporation, for the U.S. Environmental Protection Agency, Effluent Guidelines Division, February 22, 1977.

79. S-2, Selection of Refineries for RSKERL Sampling Program, prepared by Burns and Roe Industrial Services Corporation, for the U.S. Environmental Protection Agency, Effluent Guidelines Division, February 22, 1977.

80. Analytical Variability of Five Wastewater Parameters, Petroleum Refining Industry, prepared by Robert S. Kerr Environmental Research Laboratory, for the U.S. Environmental Protection Agency, EPA-600/2-76-234, September 1976.

81. Economic Analysis of Interim Final Pretreatment Standards for the Petroleum Refining Industry, U.S. Environmental Protection Agency, EPA 440/1-77-002, April 1977.

82. Askins, W., and Wilcox, D. R., "Tertiary Treatment of an Organic Chemicals Plant Effluent," prepared for the Ninth Mid-Atlantic Industrial Waste Conference, August 8-9, 1977.

83. Talbot, R.S., "A New Redox Method for Complete Removal of Chromium from Wastewater," prepared for the Ninth Mid-Atlantic Industrial Waste Conference, August 8-9, 1977.

84. "Injections Pep Up Cat Crackers," Chemical Week, April 13, 1977.

85. Schwartz, R. D., and McCoy, C.J., "The Use of Fluid Catalytic Cracking Catalyst in Activated Sludge Wastewater Treatment," Journal Water Pollution Control Federation, Vol. 48, No. 2, February 1976.

86. Ford, D. L., "Putting Activated Carbon in Perspective to 1983 Guidelines," Industrial Water Engineering, May/June 1977.

87. Economic Analysis of Proposed Revised Effluent Standards and Limitations for the Petroleum Refining Industry, U.S. Environmental Protection Agency, EPA-440/2-79-027, November 1979.

88. From Refinery Wastes to Pure Water, Hydrotechnic Corporation, New York, NY, undated.

89. Siegal, B. A. and Harrel, R. C., "Community Metabolism in a Refinery Holding Pond," Journal Water Pollution Control Federation, Vol. 48, No. 10, October 1976.

90. Baird, R. et al., "Behavior of Benzidine and Other Aromatic Amines in Aerobic Wastewater Treatment," Journal Water Pollution Control Federation, July 1977.

91. Reed, J. L., "Outlook for Refinery Capacity," Hydrocarbon Processing, June 1977.

92. Maclean, W. D., "Construction Site Selection - A U.S. Viewpoint," Hydrocarbon Processing, June 1977.

93. Jenkins, D. M. and Sheppard, W. J., "What Refinery Pollution Abatement Costs," Hydrocarbon Processing, May 1977.

94. Hatch, L. F. and Matar, S., "From Hydrocarbons to Petrochemicals," Hydrocarbon Processing, June 1977.

95. Becker, K.P. and Wall, C.F., "Fluid Bed Incineration of Wastes," Chemical Engineering Progress, October 1976.

96. "Putting Powdered Carbon in Wastewater Treatment," Environmental Science and Technology, Vol. 11, No. 9, September 1977.

97. Puckorius, P., "New Cooling-Water-Systems Treatment," The Oil and Gas Journal, July 5, 1971.

98. Nicholas, G.W., and Sopocy, D.M., "Evaluation of Cooling Tower Environmental Effects," Combustion, November 1974.

99. Kempling, J.C. and Eng, J., "Performance of Dual-Media Filters-2," Chemical Engineering Progress, April 1977.

100. Porter, J.W. et al., "Zero Discharge of Wastewater From Petroleum Refineries," prepared for the National Conference on Complete Water Reuse, April 23-27, 1973.

101. Lindsay, J.T. and Pratter, B.V., "Solving Petroleum Refinery Wastewater Problems," Journal Water Pollution Control Federation, August 1977.

102. Neff, B., "The Development of Petroleum Refinery Liquid Effluent Controls," prepared for members of the U.S. Environmental Protection Agency by Water Pollution Control Directorate, Environment Canada, March 3, 1977.

103. Status Report on Abatement of Water Pollution From the Canadian Petroleum Refinery Industry-1975, Water Pollution Control Directorate, Environment Canada, Report No. EPS-3-WP-76, December 1976.

104. Economic Analysis of Proposed Effluent Guidelines, Petroleum Refinery Industry, U.S. Environmental Protection Agency, EPA -230/1-73-020, September 1973.

105. Huber, L.J., "State and Development in Refinery Effluent Purification," prepared for the Ninth World Petroleum Congress, 1975.

106. Statistical Package for the Social Sciences, Second Edition, McGraw-Hill Book Company, 1970.

107. Beychok, Milton R., "State-of-the-Art in Sour Water Stripping," prepared for the Open Forum on Management of Petroleum Refinery Wastewater, June 6 - 9, 1977.

108. Screening Survey for Priority Pollutants, Petroleum Refining Industry, Draft Report, prepared by the Robert S. Kerr Environmental Research Laboratory, for the U.S. Environmental Protection Agency, September 1977.

109. Watkins, J.P., "Controlling Sulfur Compounds in Wastewaters," Chemical Engineering, October 17, 1977.

110. Paulson, E.G., "How to Get Rid of Toxic Organics," Chemical Engineering, October 17, 1977.

111. Ford, D.L., and Elton, R.L., "Removal of Oil and Grease from Industrial Wastewaters," Chemical Engineering, October 17, 1977.

112. Lanouette, K.H., "Heavy Metals Removal," Chemical Engineering, October 17, 1977.

113. Lanouette, K.H., "Treatment of Phenolic Wastes," Chemical Engineering, October 17, 1977.

114. Development Document for Effluent Limitations Guidelines and New Source Performance Standards for the Copper, Nickel, Chromium, and Zinc Segment of the Electroplating Point Source Category, U.S. Environmental Protection Agency, EPA-440/1-74-003-a, March 1974.

115. Grulich, G. et al., "Treatment of Organic Chemicals Plant Wastewater With DuPont PACT Process," prepared for the AICHE Meeting, February 1972.

116. Hutton, D.G., and Robertaccio, F.L., U.S. Patent 3,904,518, September 9, 1975.

117. Bloch, Heinz P., "Improve Safety and Reliability of Pumps and Drivers," Hydrocarbon Processing, pp. 97-100, January 1977.

118. Natural Resources Defense Council et al., v. Train, 8 E.R.C. 2120 (D.D.C. 1976).

119. Thibodeaux, L.J., and Millican, J.D., "Quantity and Relative Desorption Rates of Air-Strippable Organics in Industrial Wastewater," Environmental Science and Technology, Vol. 11, No. 9, September 1977.

120. Knowlton, H.E., "Biodisks Work in Waste-Water Treating," The Oil and Gas Journal, October 3, 1977.

121. Kunz, R.G. et al., "Cooling Water Calculations," Chemical Engineering, August 1, 1977.

122. Environmental Considerations of Selected Energy Conserving Manufacturing Process Options: Vol. IV. Petroleum Refining Industry Report, U.S. Environmental Protection Agency, EPA-600/7-76-034d, December 1976.

123. Dellinger, R. W., "Incorporation of the Priority Pollutants into Effluent Guidelines Division Documents," prepared for the Open Forum on Management of Petroleum Refinery Wastewater, Tulsa, Oklahoma, June 7, 1977.

124. S-3, Selection of Refineries for B & R Supplemental Sampling Program, prepared by Burns and Roe Industrial Services Corporation, for the U. S. Environmental Protection Agency, Effluent Guidelines Division, March 18, 1977, revised May 4, 1977.

125. Data Base for the Review of Effluent Limitations Guidelines (BATEA), New Source Performance Standards, and Pretreatment Standards for the Petroleum Refining Point Source Category, Paramus, N.J., Burns and Roe Industrial Services Corporation, December 1977.

126. "Electrolytic Coagulation Cleans Waste Water," Chemical and Engineering News, January 23, 1978.

127. Reed, D.T., Klen, E.F., and Johnson, D.A., "Use Stream Softening to Reduce Pollution," Hydrocarbon Processing, November 1977.

128. Finelt, S. and Crump, J.R., "Pick the Right Water Reuse System," Hydrocarbon Processing, October 1977.

129. Telliard, W. A., Rationale for the Development of BAT Priority Pollutant Parameters, May 24, 1977.

130. Grutsch, J.F. and Mallatt, R.C., "Optimizing Granular Media Filtration," Chemical Engineering Progress, April, 1977.

131. Lash, L., "Scale-up of Granular Media Filters," Chemical Engineering Progress, April 1977.

132. Brody, M.A. et al., "Performance of Dual-Media Filters," Chemical Engineering Progress, April 1977.

Upflow Filtration," Chemical Engineering Progress, April 1977.

134. Bardone, L. et al., Costs of Reducing SOs Emissions and Improving Effluent Water Quality from Refineries, Concawe, Report NR., March 1977.

135. Heath, H.W., Jr., "Chambers Works Wastewater Treatment Plant Removal of Organic and Organo-Nitrogen Compounds From Wastewater," unpublished report to Robert S. Kerr Environmental Research Laboratory, November 1976 to April 1977.

136. Hakansson, H. et al., Petroleum and Petrochemicals, Swedish Water and Air Pollution Research Laboratory, B346, Stockholm, January 1977.

137. Matthews, J.E. et al., Acute Toxic Effects of Petroleum Refinery Wastewaters on Redear Sunfish, Office of Research and Development, U.S. Environmental Protection Agency, EPA-600/2-76-241, October 1976.

138. Pendleton, H.E., Ph.D., "Petroleum and the Environment," Pollution Engineering, September 1977.

139. Dickerman, J.C. et al., Industrial Process Profiles for Environmental Use "Chapter 3-Petroleum Refining Industry," U.S. Environmental Protection Agency, EPA-600/2-77-023C, January 1977.

140. "Industry's Challenge on Benzene," Business Weeks August 22, 1977.

141. Gubrud, A.E., remarks at the Federal Water Quality Association Conference on Toxic Substances in the Water Environment, April 28, 1977.

142. Weiss, A.E., remarks at the Federal Water Quality Pollutants in the Aquatic Environment," prepared for the Open Forum on Management of Petroleum Refinery Wastewater, June 7, 1977.

143. Kuserk, F., "Texaco Has the Right Answer for Cleaner Refinery Effluents," New Jersey Effluents, October 1977.

144. DeWalle, F.B. et al., "Organic Matter Removal by Powdered Activated Carbon Added to Activated Sludge," Journal Water Pollution Control Federation, April 1977.

145. Grieves, C.G., "Powdered Carbon Improves Activated Sludge Treatment," Hydrocarbon Processing, October 1977.

146. Ford, D.L. et al., "Meeting BPT Standards for Intermediate and Secondary Refinery Wastewater Treatment," Industrial Wastes, September/October 1977.

147. Hannah, S.A. et al., "Removal of Uncommon Trace Metals by Physical and Chemical Treatment Processes," Journal Water Pollution Control Federation, November 1977.

148. Electron Microscopic Analysis of Water Samples for Asbestos, Final Report, GCA Corporation, GCA/Technology Division, December 1977.

149. Analysis of Petroleum Refinery Effluents for Organic Priority Pollutants, Draft Final Report, Midwest Research Institute, March 1978.

150. Water Reuse Studies, API Publication 949, American Petroleum Institute, August 1977.

151. Cost Manual for the Direct Discharge Segment of the Petroleum Refining Industry, prepared by Burns and Roe Industrial Services Corporation, for the U.S. Enviornmental Protection Agency March 1979.

152. Rizzo, J.A., "Case History: Use of Powdered Activated Carbon in an Activated Sludge System," prepared for the First Open Forum on Petroleum Refinery Wastewaters, Tulsa, OK, January 1976.

153. Grieves, C.G. et al., "Effluent Quality Improvement by Powdered Activated Carbon in Refinery Activated Sludge

Processes," prepared for the API Refining Department, 42nd Midyear Meeting, Chicago, Illinois, May 11, 1977.

154. Thibault, G.T., Tracy, K.D., and Wilkinson, J.B., "Evaluation of Powdered Activated Carbon Treatment for Improving Activated Sludge Performance," prepared for the API Refining Department, 42nd Midyear Meeting, Chicago, IL, May 11, 1977.

155. Flynn, B.P., "Startup of 38 MGD Powdered Activated Carbon - Activated Sludge (PACT) Treatment System at DuPont's Chambers Works," prepared for the 50th Annual Water Pollution Control Federation conference, Philadelphia, PA, October 3, 1977.

156. Robertaccio, F.L., "Combined Powdered Activated Carbon - Biological Treatment: Theory and Results," prepared for the *Second Open Forum on Management of Petroleum Refinery Wastewaters*, Tulsa, OK, June 8, 1977.

157. Spady, B. and Adams, A.D., "Improved Activated Sludge Treatment With Carbon," Deeds & Data, Water Pollution Control Federation, January 1976.

158. Development Document for Effluent Limitations Guidelines and Standards for the Petroleum Refining Point Source Category. U.S. Environmental Protection Agency 440/1-79/014-b, December 1979.

159. Wastewater Recycle Study - Petroleum Refining Industry, prepared by Burns and Roe Industrial Services Corporation for the U.S.E.P.A. E.G.D., November 1980.

160. Preliminary Screening of the 1979 Effluent Monitoring (BPT) Data, prepared by Burns and Roe Industrial Services Corporation for the U.S. Environmental Protection Agency, Effluent Guidelines Division, September 1982.

161. Petroleum Refining Self Monitoring Data Analysis, prepared by Sanford Research Institute for the U.S. Environmental Protection Agency, Office of Analysis and Evaluation, September 1982.

162. Surrogate Sampling Program Petroleum Refining Industry, prepared by Burns and Roe Industrial Services Corporation Submittal to U.S. Environmental Protection Agency, Effluent Guidelines Division, September, 1982.

163. Summary of the Record for the Development of the Survey of 1979 Effluent Monitoring Data for the Petroleum Refining Point Source Category, prepared by Burns and Roe Industrial Services Corporation for the U.S.

Environmental Protection Agency, Effluent Guidelines Division, June 1980.

164. Petroleum Refining Industry, Refinements to 1979 Proposed Flow Model and Supplemental Documents, prepared by Burns and Roe Industrial Services Corporation for the U.S. Environmental Protection Agency, Effluent Guidelines Division, September 1982.

165. Ambient Water Quality Criteria, U.S. Environmental Protection Agency, Criteria and Standards Division, EPA 440/5-80-069, November 1980.

166. Petroleum Refining Industry, Flow Model Documentation Report, prepared by Burns and Roe Industrial Services Corporation for the U.S. Environmental Protection Agency, Effluent Guidelines Division, March 1980.

167. Cantrell, Ailleen, "Annual Refining Survey," Oil and Gas Journal, March 30, 1981.

168. Environmental Data Summary and Analysis for the Petroleum Refining Industry, prepared by Versar, Inc. for the U.S. Environmental Protection Agency, Monitoring and Data Support Division, September 10, 1982.

169. Development Document for Effluent Limitations Guidelines and Standards for the Coil Coating Point Source Category, EPA 440/1-81/071b, January 1981.

170. Development Document for Effluent Limitations Guidelines and Standards for the Inorganic Chemicals Manufacturing Point Source Category, Final, EPA 440/1-82/007, June 1982.

171. BAT Compliance Costs for the Direct Discharge Segment of the Petroleum Refining Industry, prepared by Burns and Roe Industrial Services Corporation for the U.S.Environ-Protection Agency, Effluent Guidelines Division,December 1980.

172. Hynek, R.J. and Chou, C.C., "Field Performance of Three RBC Aeration Modes Treating Industrial Wastes,"presented at the 35th Annual Purdue Industrial Waste Conference, May 13-15, 1980.

173. Davies, B.T. and Vose, R.W. "Custom Designs Cut Effluent Treating Costs Case Histories at Chevron U.S.A., Inc." Proceedings of the 32nd Purdue Industrial Waste Conference, May 10-12, 1977.

174. Grieves, C.G., Crame, L.W., Vernardos, D.G., Ying, W., "Powdered versus Granular Carbon For Oil Refinery Wastewater Treatment," Journal Water Pollution Control Federation, March 1980.

APPENDIX A

COSTS OF TREATMENT AND CONTROL SYSTEMS

INTRODUCTION

This section addresses the costs associated with the control and treatment technologies presented in Section VII. As such, the cost estimates represent the incremental expenditures required over and above the capital and operating costs associated with attainment of existing effluent limitations. These differential costs, therefore, relate to specific control and treatment alternatives that could be necessary to comply with BAT limitations.

The cost estimates presented do not include land costs; the cost of land is variable and site dependent and cannot be estimated on a national basis. However, the amount of land required is indicated for each of the major end-of-pipe treatment schemes. These land requirements are minimal compared with the land requirements for refinery process equipment and existing wastewater treatment facilities.

The cost data presented in this section are based on flow rates. The major capital cost items considered were equipment, installation, engineering, and contingencies, while operating costs included maintenance, labor, chemical, and power costs. The following unit costs in 1977 dollars were used for calculating the major capital and operating costs presented in this section:

Item	Unit Cost
1. Tank Steel	\$1.40 - 2.00/pound
2. Tank Lining	\$3.00 - 4.00/ft^2
3. Carbon, granular (capital cost)	\$31.00/ft^3
4. Carbon, granular (operating cost)	\$0.61/lb
5. Carbon, powdered (operating cost)	\$0.31/lb
6. Electricity	\$0.04/kilowatt hr
7. Manpower	\$10.00/hr

Capital costs for major equipment items such as clarifiers, filters, carbon regeneration furnaces, solids dewatering filters, activated carbon, and large pumps were obtained from equipment manufacturers. Other costs such as the unit cost of tank steel, piping, small pumps, etc. were derived from the contractor's (Burns and Roe) in-house experience and expertise in the design and construction of major facilities.

COST OF TECHNOLOGIES CONSIDERED

Biological Treatment

Cost analyses developed for BPT regulations are based on activated sludge or equivalent BPT systems (3). A very limited number of refineries may need to upgrade their existing biological treatment systems to comply with BAT limitations.

One method of upgrading a biological unit is to install a raw wastewater equalization system (143). Table A-1 presents capital and operating costs for this type of modification. These costs are based on 12 hours detention and include the necessary pumps and controls for equalization of flow and pollutant loading.

EPA assumes the tanks are manufactured by placing a steel shell on a concrete pad. Costs are included for pumping the wastewater either to or from the equalization tank. The Agency also assumes that either pumping is not required on both sides of the tank, or one set of pumps exists to supply the second pumping requirement.

Another method of improving the performance of a biological treatment system is to install a biological roughing unit. Rotating biological contactors (RBCs) are an applicable treatment alternative for use as a roughing system.

Tables A-2 and A-3 present equipment sizes and energy requirements and capital and operating costs for RBC units. It is assumed that this treatment alternative will be used if aerated lagoons or oxidation ponds comprise the basic biological treatment process. The use of aerated lagoons and oxidation ponds implies that the refinery has sufficient land to install this type of wastewater treatment system.

It is also assumed that the RBC units will precede the present biological system. Clarifiers or additional sludge handling capabilities will not be required, based on the assumption that the amount of solids carryover from the RBC units to the lagoons is approximately the same as that now entering the lagoons from the raw wastewater.

Filtration

BPT limitations are based, in part, on granular media filtration or polishing ponds (3). Many refineries do not include filtration or other polishing techniques in their present systems, even though that technology was included in model BPT. Certain refineries may have to install granular media filtration to comply with BAT limitations. Tables A-4 and A-5 include the associated cost data for filtration systems.

Powdered Activated Carbon

Refineries with activated sludge or trickling filter systems may inprove their effluent quality with powdered activated carbon treatment. Tables A-6 through A-8 present cost data for powdered activated carbon systems that do not include the cost of sludge handling in the analysis. However, when carbon regeneration is used in conjunction with powdered activated carbon treatment, the sludge produced in the biosystem is incinerated as the carbon is regenerated, thus eliminating the sludge disposal costs associated with this requirement. An analysis was undertaken to compare annual cost when sludge handling is included as a cost factor. This analysis is included in Table A-9. Tables A-10 through A-12 present cost data for powdered activated carbon systems based upon the inclusion of sludge handling costs.

Table A-11 includes the costs for purchase of solids dewatering systems, whereas Table A-12 includes operating costs with sludge disposal shown as a credit for the systems that include carbon regeneration.

The powdered activated carbon costs described above are based upon an 80 mg/L dosage rate. This number is based upon one year of operating data at the DuPont Chambers works facility.

Powdered activated carbon treatment may also be used for the removal of organic toxic pollutants, but may require higher carbon dosages. Tables A-13 through A-15 present costs for powdered activated carbon systems based upon a carbon dosage of 150 mg/L. Tables A-16 through A-19 present the analyses and associated results when the costs for sludge hauling are recognized.

Granular Activated Carbon

Table A-20 presents the equipment sizes and energy requirements used to estimate the capital and operating costs for granular activated carbon systems. The sizes are based on the design concept described in Section VII, with the system consisting of tanks that can be shipped in one piece, thereby minimizing field construction. This sizing constraint results in an unusually large number of tanks for the larger systems. In reality, a more cost-effective approach (with cost savings approximately 5 to 15 percent) is for a given refinery to use field constructed steel tanks, concrete tanks, or other construction techniques, which have been determined for that refinery individually. The use of shop fabricated tanks with similar sizes allows for uniformity in cost estimating, especially in developing construction and design engineering estimates. This approach also results in a conservative (larger) estimate, and is considered preferable when considering general industry-wide costs.

Table A-21 presents the capital costs for the systems outlined in Table A-20. Table A-22 provides the operating costs, excluding depreciation, for these granular activated carbon systems. The capital costs for carbon regeneration systems are based on an equipment manufacturer's quotations. Manpower requirements for the operation of the granular carbon adsorbers were obtained from the EPA Technology Transfer Series, Carbon Adsorption Manual (64).

One equipment supplier leases carbon adsorption systems. Plants would pay a yearly operating cost with no initial investment other than a foundation for and piping to the equipment. This supplier has suggested the following rental cost estimates for the two smallest systems:

o	380 M^3/day (0.1×10^6 gal/day)	- $75,000 to $100,000/yr
	Foundation and hookup	- $5,000
o	3,800 M^3/day (1.0×10^6 gal/day)	- $450,000/yr
	Foundation and hookup	- $15,000

These estimates are based on a lease agreement for a minimum of three years and include the carbon adsorbers with installation, all granular carbon required, and carbon regeneration services. Manpower for the operation of the carbon columns is not included.

Low Flow Rate Systems

Table A-23 presents capital and operating costs for the systems discussed above at a design flow rate of 10,000 gal/day.

In-Plant Control

Chromium Removal - The treatment technology described in Section VII is the basis for estimating the costs of chromium removal. Refineries can also take advantage of the reduction capabilities of refinery sewers and the removal capabilities of secondary treatment systems.

Table A-24 presents cooling tower blowdown rates for the refineries that responded to the 1977 EPA Petroleum Refining Industry Survey. The flow rates have been used as the design basis for chromium treatment systems. Table A-25 presents equipment cost bases and energy requirements for selected flow rates from Table A-24; Table A-26 presents the capital and operating costs for these systems.

Flow Reduction - Section VII describes a number of in-plant control measures designed to reduce or eliminate wastewater flow. Many of these measures, however, require a plant-by-plant evaluation to determine their usefulness. In addition, the costs associated with their implementation are, for the most part, site dependent making an accurate estimation of representative costs on an industry-wide basis very difficult.

For the 1979 proposal, the Agency did select one in-plant flow reduction measure, however, that can be applied at most refineries and whose cost can be readily estimated on an industry-wide scale. This flow reduction scheme consists of recycling treated refinery wastewaters for process-related applications such as cooling tower makeup, pump gland cooling water, washdown water, and fire system water. This wastewater could be reused once and then returned to the refinery wastewater collection system for end-of-pipe treatment. The amount of wastewater that can be recycled in this manner depends on many factors, including the number of cooling towers in the plant and the salinity of the wastewater to be recycled. EPA chose this wastewater reduction technique to form an estimate, because it is both definable and representative of the costs that would be incurred by other, similarly effective in-plant control measures.

Table A-27 presents the capital and operating costs per mile used for the 1979 proposal for recycling various amounts of treated wastewater. In some cases, particularly for cooling tower makeup, the recycled wastewater may require treatment to remove calcium and magnesium hardness. The costing procedure for the 1979 proposal assumed the use of lime or lime-soda ash softening followed by filtration. Table A-28 presents the capital costs for softening systems that correspond to the flow rates in Table A-27. Operating costs cannot be readily determined on an industry-wide basis because they depend largely on the site specific concentrations of calcium and magnesium in the recycled wastewater. Lime costs can be approximated at $0.025/1,0000 gal of treated water for an influent hardness of 100 mg/l (as $CaCO_3$), to $0.12/1,000 gal for an influent hardness of 500 mg/l (as $CaCO_3$). These costs can vary, depending on the desired effluent quality and on the influent water quality, especially costs involving alkalinity.

In an effort to confirm its assessment of wastewater flow reduction costs, the Agency conducted a series of site investigations after proposal to identify feasible flow reduction techniques and to determine actual costs for specific refineries to install these technologies. This Wastewater Recycle Study involved fifteen refineries throughout the United States and focussed on methods of recycling and reusing wastewaters within a refinery in an effort to reduce the rate of final discharge. These methods included the recycling of treated wastewaters, the reuse of sour water, the recycling of pump and compressor cooling water, and the collection and reuse of steam condensate. Site investigations involved wastewater management practices that were found to be successful in reducing final effluent and that could be generally applicable to other refineries. The findings of the overall study, including discussions of the flow reduction schemes developed

for each refinery and estimates of the capital and annual operating cost requirements involved, were presented in a report (159). Results indicate that wastewater discharge reduction to the proposed BAT flow level is achievable at the refineries investigated. The study also revealed that the costing procedure used in developing the proposed requlations did produce conservative cost estimates.

COST OF TECHNOLOGY SELECTED AS BASIS FOR LIMITATIONS AND STANDARDS

EPA considered nine options in finalizing BAT regulations, four options for NSPS guidelines, and three options for PSES and PSNS controls. The following discussions describe the costing methodologies and results obtained for each.

BAT Options

As discussed in Section VIII, nine regulating options that included various combinations of flow reduction and wastewater treatment technology were considered for BAT. Options 1 through 6 were investigated in formulating the proposed rule. Option 7 (a modification of Option 2) and Option 8 (a modification of Option 1) were developed on the basis of information that was available at the time of the 1979 proposal, but was then modified and supplemented as a result of information collected by EPA after the proposal. Option 9 requires no additional controls beyond existing BPT, and therefore, would incur no additional cost.

Cost estimates for Options 1, 2, and 3 were developed for the direct discharging segment of the industry on a plant-by-plant basis for the 1979 proposal. These estimates of total capital and annual operating costs in 1977 dollars are presented in Table A-29.

It was realized that the most accurate method of determining compliance costs would be to conduct an engineering evaluation at each refinery that might be affected by proposed discharge regulations. However, in order to produce conservative compliance costs within a reasonable manhour expenditure, a cost estimating procedure was established. The procedure relied on flow reduction and end-of-pipe treatment alternatives that could be directly defined. The approach included flow reduction only (Option 1), and flow reduction plus enhanced biological treatment (Option 3). The costs of the Option 3 wastewater management combination were used to represent the costs associated with meeting Option 2 requirements.

The procedure developed to estimate plant-by-plant compliance costs began with a review of each refinery's generated wastewaters, end-of-pipe treatment system, and modes of disposition. The volume of wastewater generated daily by each refinery was traced and categorized according to treatment and disposal. Data were obtained from industry responses to EPA's 1977 Petroleum Refining Industry Survey and its subsequent submittals.

The next step in the costing procedure was to determine the type of biological enhancement to be added at each refinery and then assign costs. Although an individual refinery may choose to upgrade its biological treatment system in other ways, powdered activated carbon treatment and rotating biological contactors were considered in this procedure, and readily priced as add-on systems. Refineries that had, or were planning to have, aerated lagoons or oxidation ponds were given costs for RBC systems. Refineries that had, or were planning to have, activated sludge, trickling filters, or RBC systems were given costs for powdered activated carbon treatment. Capital and operating treatment costs were based on the influent rate to the end-of-pipe system, with a minimum of 10,000 gallons per day. Costs for these systems were expected to be conservatively high estimates.

Determining the amount of flow reduction required by each refinery was the third step in the procedure. The proposed flow model presented in Section IV was used to calculate model wastewater generation rates, based on process capacities, for each direct discharger. BAT discharge rates were then set at 73 percent of the calculated model flow (27 percent reduction). Each refinery's actual rate of direct discharge of production wastewaters was compared to its calculated BAT discharge rate to determine required reductions. Prior to this comparison, actual discharges were adjusted by planned reductions in the amount of wastewater generated, and reductions in flow to end-of-pipe treatment.

The following step in the procedure was to allocate flow reduction costs. The assumed reduction technique selected for the development of cost estimates was the recycling of treated wastewater for use in process related applications, such as cooling tower make-up, pump gland cooling water, wash down water, and fire system water. Based on recycle flow rate and a derived relationship between refinery size and required pumping distance, pumping and piping costs were calculated for each refinery that required flow reduction. The assumption was also made that softening would be necessary before treated wastewater could be reused. Costs were determined for softening 25 percent of the recycled wastewater with the lime-soda process and filtration.

The final step in the compliance costing procedure was to combine the treatment and flow reduction costs assigned to each refinery and to compute overall industry costs. Capital and operating costs for each refinery were generated by adding those model technologies that did not exist in 1976 and that were not planned for the future. Since biological treatment is essential in meeting the BPT guidelines, this level of treatment was assumed to exist at all direct discharging refineries. Therefore, the cost estimates represent the incremental expenditures required over and above the costs associated with attainment of BPT effluent limitations.

More details on the costing procedure and refinery data used to estimate compliance costs can be found in the report on this effort entitled, "Cost Manual for the Direct Discharge Segment of the Petroleum Refining Industry" (151). The cost evaluation concluded that, for Option 1, a total industry capital cost of $23.5 million in 1979 dollars would be required, with an annual operating cost of $3.4 million, to comply with proposed effluent limitations guidelines. Option 2 and Option 3 would require a total capital cost of $138 million and an annual operating cost of $27.1 million. These cost figures have been updated to 1979 dollars based upon the Nelson Refinery Construction and Operating Cost Indices.

An "annualized cost" combines capital cost and operating cost into a single value that represents average annual disbursements required to finance, operate, and amortize a facility. The basis for computing annualized compliance costs, as outlined in the Agency's economic analysis of proposed effluent standards and limitations (87), is the sum of annual operating costs (including labor, materials, chemicals, energy, insurance, and taxes), capital recovery, and return-on-investment. Computed on this basis, the estimated annualized cost that would be required for Option 1 is $9.3 million, while $62 million would be required for Options 2 and 3.

Option 4 required effluent limitations beyond BPT based upon wastewater flow reduction and the segregation and separate treatment of cooling tower blowdown. While the cost of chromium removal could be estimated, the cost of segregating cooling tower blowdown from other process streams was not available at the time of proposal. Therefore, EPA did not make a detailed cost analysis for this option.

One objective of the Agency's wastewater recycle/reuse study (159), conducted after the publication of the proposed regulation, was to determine the waste management changes that would be required and the costs involved to segregate and collect these blowdown streams. Results of the study indicate that, for existing sources, it is extremely difficult, in many instances, to segregate cooling tower blowdown for chromium treatment. Cooling tower blowdown is typically effected at numerous locations throughout a refinery. Extensive collection systems would be necessary at many refineries to collect all blowdown streams for separate treatment. In addition, not all cooling tower blowdown streams are collectible. For instance, cooling water when used as makeup for refinery processes commingles with process water and cannot be traced or segregated, especially in older refineries. Therefore, the Agency has determined that it would not be proper to base BAT effluent limitations guidelines on this technology option. Complete cost estimates for this option have not been developed.

Option 5 was based upon wastewater flow reduction in addition to BPT treatment plus the addition of granular activated carbon treatment to control residual toxic organic pollutants. Cost estimates for this option were based upon compliance costs developed for Option 1 and the capital and operating costs for GAC treatment as shown in Tables A-21 and A-22. A total annual industry cost of an estimated $470 million in 1979 dollars would be required for this option.

Prohibiting the discharge of wastewater pollutants was proposed as Option 6, and was based upon reuse, recycle, evaporation, or reinjection of wastewaters. Total industry costs were not calculated for this option. While additional costs for building a new refinery to eliminate discharge have been determined, the costs of retrofitting an existing refinery are highly site specific. Costs for a zero discharge option, however, would be significantly higher than costs for applying any of the other options.

Options 7 and 8 are revisions to Options 1 and 2, and are based upon discharge flow reductions from the revised model flow. Results of the Agency's wastewater recycle study were used to revise the compliance costing procedures previously developed for Options 1 and 2.

Several methods were found at the refineries studied that could reduce the rates at which wastewaters were being discharged from boiler circuits, cooling tower circuits, and general process uses. The use of treated effluent as a replacement for raw water in these areas was also examined. However, not all methods are applicable at every refinery. Each refinery's flow scheme, intake water quality, and wastewater treatment system limit the flow reduction options available to it. But, a list of techniques has been identified from which a refinery can select one or more alternatives to reduce its discharge rate to the target BAT level.

Capital and operating cost data developed during the study represent combinations of flow reduction techniques that could be used to meet the BAT level. A unit flow reduction cost resulted for each refinery based on the mix of reduction schemes proposed for that particular refinery. Annual flow reduction costs established for all of the refineries investigated fall within a specified range when expressed in terms of dollars per gallon reduced per day. These cost data were used to estimate flow reduction costs for the industry.

The previous compliance costing procedure began with a review of each refinery's generated wastewaters, end-of-pipe treatment system, and modes of disposition. The volume of wastewater generated daily by each refinery was traced and categorized according to treatment and disposal. The revised procedure continued with a determination of the amount of flow reduction

required by each refinery. Model flows were calculated based upon process crude capacities. BAT discharge rates were then set at 62.5 percent of the calculated model flows. Each refinery's existing process wastewater discharge rate is compared to its target BAT discharge rate to determine required reductions. Prior to this comparison, existing discharges were adjusted by flow reductions that were reportedly being planned for the near future. Flow reduction costs were then allocated for each refinery.

Plant-by-plant estimates of the costs that would be required for Option 7 were developed for the direct discharge segment of the industry. These estimates, along with refinery data used in the costing procedure, are presented in a report prepared for this effort entitled, "BAT Compliance Costs for the Direct Discharge Segment of the Petroleum Refining Industry" (171). Results of the revised procedure indicate that a total capital cost of $112 million and an annualized cost of $37 million in 1979 dollars would be required for this segment of the industry to comply with Option 7.

The Agency has not performed a detailed cost analysis of Option 8, but has estimated such costs based upon the costing procedure developed for Option 7. BAT discharge rates were set at 80 percent of the revised model flows. Flow reduction costs were allocated for each direct discharge refinery, generating plant-by-plant estimates of compliance costs for Option 8. This effort concluded that a total capital cost of $77 million and an annualized cost of $25 million in 1979 dollars would be required for the industry to comply with Option 8.

New Source Costs

EPA considered four options for the final rulemaking. NSPS Options 1, 2, and 3 were included in the 1979 proposal. Option 4 was added subsequently and would set new source standards equal to the existing standards promulgated in 1974. NSPS Options 1, 2, and 3 utilize technology similar to BAT Options 2, 5, and 6, respectively. Unlike the similar BAT technology options, new sources have the opportunity to incorporate technological changes without incurring the retrofit costs included in modifications to existing refineries.

NSPS Option 1 - Discharge flow reduction to 52 percent below model flow, achieved through greater reuse and recycle of wastewater, in addition to BPT treatment, is equivalent to BAT Option 2.

The 1979 development document contains an estimate of cost to construct a new 150,000 barrel/day subcategory B refinery. Cost for NSPS Option 1 include:

Cost Component	1979 Dollars
Capital Costs	$ 0.75 million
Operating Costs	0.37 million

NSPS Option 2 - Discharge flow reduction to 27 percent below BPT model flow, achieved through greater reuse and recycle of wastewaters in addition to BPT treatment, plus use of granular activated carbon (GAC) treatment to reduce residual organic toxic pollutants is equivalent to BAT Option 5. A new refinery will not incur the retrofit costs of flow reduction associated with BAT Option 5, however, it will incur the capital cost for GAC plus annual operating costs as shown in Tables A-21 and A-22.

NSPS Option 3 - Zero discharge of wastewater pollutants is similar to BAT Option 6 except that the new refinery will not incur retrofit costs.

EPA has not calculated the costs for eliminating wastewater discharge. However, the API publication Water Reuse Studies (150) has presented such costs for a 150,000 barrel per day refinery. Based upon estimates contained in this document, investment, over BPT, of 11.6 million would be required with an annual cost of 4.6 million, including interest and depreciation (1979 dollars).

NSPS Option 4 - Discharge flow reduction to from 25 percent to 50 percent below BPT model flow, depending upon subcategory, achieved through greater reuse and recycle of wastewater is equivalent to the existing new source performance standard promulgated in 1974. NSPS Option 4 is equal to the existing criteria for new sources, and therefore, a new refinery will incur no additional cost in complying with this technology option.

Pretreatment Options

The Agency evaluated three technology options for the selection of final standards for indirect dischargers. Options 1 and 2 are similar to Options 1 and 2 presented in the 1979 proposal. The third option was considered after the 1979 proposal and is similar to the existing standard for existing sources. EPA developed these costs by estimating the values for each plant requiring chromium removal and/or biological treatment. The costs presented in the tables were updated to January 1977.

Costs for end-of-pipe treatment includes the following processes:

Biological treatment, consisting of activated sludge units, thickeners, digesters, and dewatering facilities.

Granular media filtration, consisting of filter systems and associated equipment.

These costs were also indexed to January 1977 values.

PS Option 1 - Chromium reduction by pH adjustment, precipitation and clarification technologies applied to cooling tower blowdown, plus control of oil and grease and ammonia at the existing level of control is similar to Option 1 in the 1979 proposal. Separation and treatment of cooling tower blowdown is the additional technology required beyond existing pretreatment standards.

Table A-30 presents the costs of modifying each indirect discharge refinery to meet Option 1 requirements. The analysis includes the cost of combining the effluents from multiple cooling tower installations. Estimates of necessary pumps and piping were obtained from the cost presented for recycle of treated effluents in Table A-27.

The Agency estimated the combined cost of retrofitting affected indirected dischargers at $11.7 million initial investment and an annual cost of $6.8 million (1979 dollars).

The Agency estimated the incremental cost of incorporating PS Option 1 technology into a subcategory B model new refinery (150,000 barrel per day topping and cracking) at an initial investment of 0.37 million and an annual cost of $0.26 million (1979 dollars) including interest and depreciation.

PS Option 2 - Establish two sets of pretreatment standards. Provide Option 1 control for refineries that discharge to POTW with existing or planned secondary treatment. Provide Option 1 controls plus biological treatment for refineries that discharge to POTW that have a Section 301(h) waiver from secondary treatment. Tables A-30 and A-31 combined contain the costs to implement Option 2 (1977 dollars). Included in Table A-31 are costs for the installation of in-plant control measures for those plants whose wastewater flow exceeded the calculated BPT model flow. These costs were obtained from the National Commission on Water Quality (20).

Total cost of implementing Option 2 for existing refineries could not be calculated for the 1979 proposal since no POTW had been granted a Section 301(h) waiver at the time the cost estimates were prepared. The Agency did estimate the cost of installing biological treatment for each indirect discharge refinery. These values are shown in Table A-31 for information purposes only. If all indirect discharge refineries were required to install biological treatment systems, the maximum cost to the industry (obtained by summing cost to each refinery in Table A-31 and indexing to a base year) would be an initial investment of $110 million and an annual cost of $42 million (1979 dollars). All refineries discharging to POTW having secondary treatment were subject to the cost of providing Option 1 treatment shown in Table A-30.

PS Option 3 - Reduction of oil and grease and ammonia by oil/water separation and steam stripping technologies is equivalent to the existing pretreatment standard. Since indirect discharging refineries are already required to provide treatment equivalent to Option 3, implementation of Option 3 would incur no additional cost to existing refineries.

TABLE A-1

RAW WASTEWATER EQUALIZATION SYSTEMS
CAPITAL AND OPERATING COSTS

Description	380 M^3/day (0.1×10^6) gal/day	3800 M^3/day (1.0×10^6) gal/day	19,000 M^3/day (5×10^6) gal/day	38,000 M^3/day (10×10^6) gal/day	76,000 M^3/day (20×10^6) gal/day
	Capital Cost, Dollars				
Detention tank, 12 hours detention, steel shell on concrete pad	$ 30,000	$ 116,000	$ 346,000	$ 595,000	$1,020,000
Pumps, and associated controls, installed	8,000	30,000	87,000	149,000	255,000
Subtotal	$ 38,000	$ 146,000	$ 433,000	$ 744,000	$1,275,000
Piping, installed (15%)	5,700	22,000	65,000	117,000	192,000
Total Installed Cost	$ 43,700	$ 168,000	$ 498,000	$ 861,000	$1,467,000
Engineering	6,650	26,000	75,000	129,500	221,500
Contingency	6,650	26,000	75,000	129,500	221,500
Total Capital Cost	$ 57,000	$ 220,000	$ 648,000	$1,120,000	$1,910,000
Land Requirements, Ft^2	585	5,780	28,200	57,600	113,000
	Annual Operating Costs, Dollars				
Pumping	$ 140	$ 1,400	$ 7,000	$ 14,000	$ 28,000
Maintenance (3% of Capital Cost)	1,700	6,600	19,500	33,600	57,300
Total Annual Cost	$ 1,840	$ 8,000	$ 26,500	$ 47,600	$ 85,300

Note: The Depreciation factor has been omitted from this analysis due to the fact that it will be included separately in the Economic Impact Analysis Supplement.

TABLE A-2

ROTATING BIOLOGICAL CONTACTORS (RBC's)
AS ROUGHING SYSTEMS
EQUIPMENT COST BASIS
AND ENERGY REQUIREMENTS

Description	Equipment Size				
	380 M^3/day (0.1×10^6) gal/day	3800 M^3/day (1.0×10^6) gal/day	19,000 M^3/day (5×10^6) gal/day	38,000 M^3/day (10×10^6) gal/day	76,000 M^3/day (20×10^6) gal/day
Design Percent Removal of BOD	50	50	50	50	50
Number of Units	1	6	24	48	96
Shaft Lengths, each	15	20	25	25	25
Total Square Feet of Surface Area	75,000	630,000	3,200,000	6,400,000	12,800,000
	Annual Operating and Energy Requirements				
Manpower Requirements, hours	500	750	1,000	1,500	2,000
Power Requirements, kwh/year	33,000	294,000	1,180,000	2,360,000	4,720,000

TABLE A-3

ROTATING BIOLOGICAL CONTACTORS (RBC's)
AS ROUGHING FILTERS
CAPITAL AND OPERATING COSTS

Description	380 M^3/day (0.1×10^6) gal/day	3800 M^3/day (1.0×10^6) gal/day	19,000 M^3/day (5×10^6) gal/day	38,000 M^3/day (10×10^6) gal/day	76,000 M^3/day (20×10^6) gal/day
	Capital Cost, Dollars				
RBC Units, Steel Shell, Fiberglass Cover	$ 46,000	$340,000	$1,590,000	$3,170,000	$6,340,000
Piping	5,000	35,000	160,000	317,000	634,000
Total Equipment Cost	51,000	375,000	1,750,000	3,487,000	6,974,000
Installation (50%)	25,500	187,500	875,000	1,744,000	3,487,000
Total Constructed Cost	76,500	562,500	2,625,000	5,231,000	10,461,000
Engineering	11,750	84,750	397,500	784,500	1,569,500
Contingency	11,750	84,750	397,500	784,500	1,569,500
Total Capital Cost	$100,000	$732,000	$3,420,000	$6,800,000	$13,600,000
Land Required, Ft^2	420	2,800	13,500	27,000	54,000
	Annual Operating Costs*				
Power	$ 1,500	$ 12,000	$ 48,000	$ 95,000	$ 190,000
Labor	5,000	7,500	10,000	15,000	20,000
Maintenance (3% of Total Capital Cost)	3,000	22,000	103,000	204,000	408,000
Total Annual Cost	$ 9,500	$ 41,500	$ 161,000	$ 314,000	$ 798,000

Note: The depreciation factor has been omitted from this analysis due to the fact that it will be included separately in the Economic Impact Analysis Supplement.

TABLE A-4

FILTRATION
EQUIPMENT COST BASIS AND ENERGY REQUIREMENTS

Description	Equipment Cost Basis				
	380 M^3/ day	3800 M^3/day	19,000 M^3/day	38,000 M^3/day	76,000 M^3/day
	(0.1 X 10^6gal/day)	(1 X 10^6gal/day)	(5 X 10^6gal/day)	(10 X 10^6gal/day	(20 X 10^6gal/day)
Filter Description (all units are automatic and air scoured)	2 units 5' diam.,steel	2 units 11' diam.,steel	1 unit, 4-35'square cells, concrete	1 unit,4-47'square cells, concrete	2 units, 47' square cells, concrete
Bed depth, ft.	4	4	4	4	4
Operation type	Gravity	Gravity	Gravity	Gravity	Gravity
Media type	Dual media	Dual media	Dual media	Dual media	Dual media
	Annual Operating and Energy Requirements				
Pumping, KWH/year	3,440	34,400	172,000	344,000	688,000
Labor, Manhours/year	400	500	600	700	800

TABLE A-5

FILTRATION
CAPITAL AND OPERATING COSTS

Description	380 M^3/day (0.1×10^6) gal/day	3800 M^3/day (1.0×10^6) gal/day	19,000 M^3/day (5×10^6) gal/day	38,000 M^3/day (10×10^6) gal/day	76,000 M^3/day (20×10^6) gal/day
	Capital Cost, Dollars				
Filtration Units Installed	$ 25,000	$100,000	$250,000	$350,000	$600,000
Interconnecting Piping, Installed	3,000	10,000	25,000	35,000	60,000
Pumps, Installed	5,000	15,000	42,000	60,000	100,000
Total Installed Cost	33,000	125,000	317,000	451,000	770,000
Engineering	6,000	20,000	49,000	69,500	115,000
Contingency	6,000	20,000	49,000	69,500	115,000
Total Capital Cost	$ 48,000	$165,000	$415,000	$590,000	$1,000,000
Land Requirement, Ft^2	200	700	5,000	9,000	18,000
	Annual Operating Cost, Dollars				
Pumping	$ 140	$ 1,400	$ 7,000	$ 14,000	$ 28,000
Labor	4,000	5,000	6,000	7,000	8,000
Maintenance (3% of Capital Cost)	1,400	5,000	12,500	18,000	30,000
Total Annual Cost	$ 5,540	$ 11,400	$ 25,500	$ 39,000	$ 66,000

Note: The Depreciation factor has been omitted from this analysis due to the fact that it will be included separately in the Economic Impact Analysis Supplement.

TABLE A-6

POWDERED ACTIVATED CARBON
EQUIPMENT COST BASIS
AND ENERGY REQUIREMENTS
80 mg/l DOSAGE RATE

Description	Equipment Size				
	380 m^3/day (0.1×10^6) gal/d	3800 m^3/day (1.0×10^6) gal/d	19,000 m^3/day (5×10^6) gal/d	38,000 m^3/day (10×10^6) gal/d	76,000 m^3/day (20×10^6) gal/d
Powdered Carbon Feed Tanks (2 each) Capacity, gallons (Based on feed concentration of one pound carbon/gallon water)	700	7,000	35,000	70,000	140,000
Feed Rate pounds/day	67	670	3,350	6,700	13,400
	Annual Operating and Energy Requirements				
Manpower Requirements, hours	400	540	940	1,240	1,940
Miscellaneous Power Requirements, kWh/yr	25,000	50,000	125,000	200,000	375,000

TABLE A-7

POWDERED ACTIVATED CARBON
CAPITAL COSTS
80 mg/l DOSAGE RATE

Description	Capital Costs, Dollars				
	380 m^3/day (0.1×10^6) gal/d	3800 m^3/day (1.0×10^6) gal/d	19,000 m^3/day (5×10^6) gal/d	38,000 m^3/day (10×10^6) gal/d	76,000 m^3/day (20×10^6) gal/d
Powdered Carbon Feed System	$10,000	$30,000	$45,000	$60,000	$100,000
Piping	1,000	3,000	4,500	6,000	10,000
Total Equipment Cost	11,000	33,000	49,500	66,000	110,000
Installation (50%)	6,000	16,500	24,800	33,000	55,000
Total Constructed Cost	17,000	49,500	74,300	99,000	165,000
Engineering	9,000	10,000	11,350	15,500	25,000
Contingency	9,000	10,000	11,350	15,500	25,000
Total Capital Cost	$35,000	$69,500	$97,000	$130,000	$215,000
Land Requirements, ft^2	100	200	900	1,300	1,700

TABLE A-8

POWDERED ACTIVATED CARBON
ANNUAL OPERATING COSTS
80 mg/l DOSAGE RATE

Description	Annual Cost, Dollars				
	380 m^3/day (0.1×10^6) gal/d	3800 m^3/day (1.0×10^6) gal/d	19,000 m^3/day (5×10^6) gal/d	38,000 m^3/day (10×10^6) gal/d	76,000 m^3/day (20×10^6) gal/d
Carbon Make-Up	$ 7,400	$74,000	$370,000	$740,000	$1,480,000
Miscellaneous Power Requirements	1,000	2,000	5,000	8,000	15,000
Labor ($10/manhour)	4,000	5,400	9,400	12,400	19,400
Maintenance (3% of total Capital Cost)	1,000	2,000	3,000	4,000	6,600
Total Annual Cost	$13,400	$83,400	$387,400	$764,400	$1,521,000

Note:

The depreciation factor has been omitted from this analysis due to the fact that it will be included separately in the Economic Impact Analysis Supplement.

TABLE A-9

POWDERED ACTIVATED CARBON

COMPARISON OF OPERATING COSTS
CARBON REGENERATION VS. THROW-AWAY
80 mg/l DOSAGE RATE

Item	380 m^3/day (0.1×10^6) gal/d	3800 m^3/day (1.0×10^6) gal/d	19,000 m^3/day (5×10^6) gal/d	38,000 m^3/day (10×10^6) gal/d	76,000 m^3/day (20×10^6) gal/d
Regenerated					
Capital Cost	$735,000	$1,000,000	$1,650,000	$2,300,000	$3,250,000
Carbon Make-Up	$ 2,200	$ 22,000	$ 110,000	$ 220,000	$ 440,000
Furnace Power	5,000	19,000	44,000	76,000	132,000
Miscellaneous Power	1,000	2,000	5,000	8,000	15,000
Labor	91,600	93,000	97,000	100,000	108,000
Maintenance (3%)	1,000	2,000	3,000	4,000	6,600
(15%)	105,000	140,000	233,000	328,000	455,000
Depreciation (27%)	200,000	270,000	446,000	621,000	878,000
Total Annual Cost	$405,800	$ 548,000	$ 938,000	$1,357,000	$2,034,600
Non-Regenerated					
Capital Cost	$ 35,000	$ 39,500	$ 97,000	$ 130,000	$ 215,000
Carbon Make-Up	$ 7,400	$ 74,000	$ 370,000	$ 740,000	$1,480,000
Labor	4,000	5,400	9,400	12,400	19,400
Maintenance (3%)	1,000	2,000	3,000	4,000	6,600
Miscellaneous Power	1,000	2,000	5,000	8,000	15,000
Depreciation (27%)	9,500	17,600	26,200	35,100	58,000
Total Annual Cost	$ 22,900	$ 101,000	$ 413,600	$ 799,500	$1,579,000
Cost for Sludge Dewatering	$ 20,000	$ 76,000	$ 137,000	$ 226,000	$ 335,000
Annual Cost with Sludge Dewatering	$ 42,900	$ 177,000	$ 550,000	$1,025,000	$1,914,000
Cost for Land Disposal	4,000	40,000	200,000	400,000	800,000
Annual Cost with Land Disposal	$ 46,900	$ 217,000	$ 750,000	$1,425,000	$2,714,000

TABLE A-10

POWDERED ACTIVATED CARBON
EQUIPMENT COST BASIS
AND ENERGY REQUIREMENTS
INCLUDING COSTS FOR SLUDGE DISPOSAL
80 mg/l DOSAGE RATE

Description	Equipment Size				
	380 M^3/day (0.1×10^6) gal/day	3800 M^3/day (1.0×10^6) gal/day	19,000 M^3/day (5×10^6) gal/day	38,000 M^3/day (10×10^6) gal/day	76,000 M^3/day (20×10^6) gal/day
Powdered Carbon Feed Tanks (2 each) Capacity, gallons (Based on feed concentration of one pound carbon/gallon water)	700	7,000	35,000	70,000	140,000
Feed Rate pounds/day	67	670	3,350	6,700	13,400
Sludge handling and/or regeneration system, lbs/day dry solids	290	2,900	14,600	29,000	58,000
	Annual Operating and Energy Requirements				
Carbon make-up lbs/day	67	670	3,350	2,000	4,000
Furnace power requirements					
Fuel, BTU/hr	N.A.	N.A.	N.A.	2,500,000	4,500,000
Connected hp	N.A.	N.A.	N.A.	100	140
Manpower requirement, hours	400	540	940	10,000	10,700

TABLE A-11

POWDERED ACTIVATED CARBON
CAPITAL COSTS
INCLUDING COSTS FOR SLUDGE DISPOSAL
80 mg/l DOSAGE RATE

	Capital Costs, Dollars				
Description	380 m^3/d (0.1×10^6 gal/d)	3800 m^3/d (1.0×10^6 gal/d)	19,000 m^3/d (5×10^6 gal/d)	38,000 m^3/d (10×10^6 gal/d)	76,000 m^3/d (20×10^6 gal/d)
Powdered Carbon Feed System	$10,000	$30,000	$45,000	$60,000	$100,000
Solids Dewatering System	--	--	--	397,000	585,000
Regenerated Carbon Acid Wash System	--	--	--	40,000	60,000
Subtotal	10,000	30,000	45,000	497,000	745,000
Piping (10%)	1,000	3,000	4,500	49,700	74,500
Total Equipment Cost	11,000	33,000	49,500	546,700	819,500
Installation (50%)	5,500	16,500	24,800	273,400	410,000
Total Constructed Cost	16,500	49,500	74,300	820,100	1,229,500
Engineering	9,000	10,000	11,350	119,950	185,250
Contingency	9,000	10,000	11,350	119,950	185,250
Subtotal	35,000	69,500	97,000	1,060,000	1,600,000
Activated Carbon Regeneration System (Installed)	--	--	--	900,000	1,200,000
Contingency (For Utility Hook-up, etc.)	--	--	--	190,000	250,000
Engineering for Carbon Regeneration System	--	--	--	150,000	200,000
Total Capital Cost	$35,000	$69,500	$97,000	$2,300,000	$3,250,000
Land Requirements, ft^2	100	200	900	3,000	4,500

TABLE A-12

POWDERED ACTIVATED CARBON
ANNUAL OPERATING COSTS
INCLUDING CREDIT FOR SLUDGE DISPOSAL
80 mg/l DOSAGE RATE

Description	Annual Cost, Dollars				
	380 M^3/day (0.1×10^6) gal/day	3800 M^3/day (1.0×10^6) gal/day	19,000 M^3/day (5×10^6) gal/day	38,000 M^3/day (10×10^6) gal/day	76,000 M^3/day (20×10^6) gal/day
Carbon Make-Up	$7,400	$74,000	$370,000	$220,000	$440,000
Furnace Power	---	---	---	76,000	132,000
Miscellaneous Power Requirements	1,000	2,000	5,000	8,000	15,000
Labor ($10/manhour)	4,000	5,400	9,400	100,000	108,000
Sludge Disposal Credit	---	---	---	(-)400,000	(-)800,000
Maintenance	1,000	2,000	3,000	332,000	461,600
Total Annual Cost	$13,400	$ 83,400	$387,000	$336,000	$ 356,000

Note:
The depreciation factor has been omitted from this analysis due to the fact that it will be included separately in the Economic Impact Analysis Supplement.

TABLE A-13

POWDERED ACTIVATED CARBON
EQUIPMENT COST BASES AND ENERGY REQUIREMENTS
150 mg/l DOSAGE RATE

Description	Equipment Size				
	380 m^3/d (0.1×10^6 gal/d)	3800 m^3/d (1.0×10^6 gal/d)	19,000 m^3/d (5×10^6 gal/d)	38,000 m^3/d (10×10^6 gal/d)	76,000 m^3/d (20×10^6 gal/d)
Powdered Carbon Feed Tanks (2 each) Capacity, gallons (Based on feed concentration of 1 lb carbon/gal water)	1,000	10,000	43,000	87,000	175,000
Feed Rate lb/d	125	1,250	6,250	12,500	25,000
Sludge Handling and/or Regeneration System, lb/d dry solids	335	3,350	16,700	33,500	66,700
Annual Operating and Energy Requirements					
Carbon Make-Up lb/d (25% make-up)	125	1,250	6,250	12,500	8,350
Furnace Power Requirements					
Fuel, Btu/h	N.A.	N.A.	N.A.	N.A.	4,500,000
Connected hp	N.A.	N.A.	N.A.	N.A.	140
Manpower Requirements, hours	400	540	940	1,240	10,700

TABLE A-14

POWDERED ACTIVATED CARBON
CAPITAL COSTS
150 mg/l DOSAGE RATE

Description	Capital Costs, Dollars				
	380 m^3/d (0.1×10^6 gal/d)	3800 m^3/d (1.0×10^6 gal/d)	19,000 m^3/d (5×10^6 gal/d)	38,000 m^3/d (10×10^6 gal/d)	76,000 m^3/d (20×10^6 gal/d)
Powdered Carbon Feed System	$15,000	$45,000	$65,000	$90,000	$150,000
Solids Dewatering System	--	--	--	--	615,000
Regenerated Carbon Acid Wash System	--	--	--	--	60,000
Subtotal	15,000	45,000	65,000	90,000	825,000
Piping (10%)	1,500	4,500	6,500	9,000	83,000
Total Equipment Cost	16,500	49,500	71,500	99,000	908,000
Installation (50%)	8,500	24,500	35,500	49,500	454,000
Total Constructed Cost	25,000	74,000	107,000	148,500	1,362,000
Engineering	9,000	13.000	16,500	22,250	207,500
Contingency	9,000	13,000	16,500	22,250	207,500
Subtotal	43,000	100,000	140,000	193,000	1,777,000
Activated Carbon Regeneration System (Installed)	--	--	--	--	1,300,000
Contingency (For Utility Hook-up, etc.)	--	--	--	--	280,000
Engineering for Carbon Regeneration System	--	--	--	--	200,000
Total Capital Cost	$ 43,000	$ 100,000	$140,000	$193,000	$3,557,000
Land Requirements, ft^2	100	800	2,000	3,000	4,500

TABLE A-15

POWDERED ACTIVATED CARBON
ANNUAL OPERATING COSTS
150 mg/l DOSAGE RATE

	Annual Cost, Dollars				
Description	380 m^3/d (0.1×10^6 gal/d)	3800 m^3/d (1.0×10^6 gal/d)	19,000 m^3/d (5×10^6 gal/d)	38,000 m^3/d (10×10^6 gal/d)	76,000 m^3/d (20×10^6 gal/d)
Carbon Make-Up	$13,900	$139,000	$694,000	$1,388,000	$ 825,000
Furnace Power	--	--	--	--	132,000
Miscellaneous Power Requirements	1,000.	2,000	5,000	8,000	15,000
Labor ($10/man-hour)	4,000	5,400	9,400	12,400	108,000
Maintenance	1,000	2,000	3,000	4,000	491,000
Total Annual Cost	$19,900	$148,400	$711,400	$1,412,400	$1,571,000

Note:

The Depreciation factor has been omitted from this analysis due to the fact that it will be included separately in the Economic Impact Analysis Supplement.

TABLE A-16

PACT
COMPARISON OF OPERATING COSTS
CARBON REGENERATION VS. THROW-AWAY
150 mg/l DOSAGE RATE

Description	380 m^3/d (0.1x10^6 gal/d)	3800 m^3/d (1.0x10^6 gal/d)	19,000 m^3/d (5x10^6 gal/d)	38,000 m^3/d (10x10^6 gal/d)	76,000 m^3/d (20x10^6 gal/d)
Regenerated					
Capital Cost	$743,000	$1,035,000	$1,743,000	$2,463,000	$3,557,000
Carbon Make-up	4,130	41,300	207,000	413,000	825,000
Furnace Power	5,000	19,000	44,000	76,000	132,000
Miscellaneous Power	1,000	2,000	5,000	8,000	15,000
Labor	91,600	93,000	97,000	100,000	108,000
Maintenance (3%)	1,000	2,000	3,000	4,000	6,000
(15%)	105,000	140,000	240,000	343,000	485,000
Depreciation (25%)	200,000	280,000	471,000	665,000	961,000
Total Annual Cost	$407,730	$577,300	$1,067,000	$1,609,000	$2,532,000
Non-Regenerated					
Capital Cost	$ 43,000	$100,000	$140,000	$193,000	$322,000
Carbon Make-up	13,900	139,000	694,000	1,388,000	2,775,000
Labor	4,000	5,400	9,400	12,400	19,400
Maintenance (3%)	1,000	2,000	3,000	4,000	6,600
Miscellaneous Power	1,000	2,000	5,000	8,000	15,000
Depreciation (27%)	11,600	27,000	37,800	52,100	87,000
Total Annual Cost	$ 31,500	$175,400	$749,200	$1,464,500	$2,903,000
Cost for Sludge Dewatering	25,000	95,000	171,000	282,000	419,000
Annual Cost with Sludge Dewatering	$ 56,500	$270,400	$920,200	$1,746,500	$3,322,000
Cost for Land Disposal	5,000	50,000	250,000	500,000	1,000,000
Annual Cost with Land Disposal	$ 61,500	$320,400	$1,170,200	$2,246,500	$4,322,000

TABLE A-17

POWDERED ACTIVATED CARBON
EQUIPMENT COST BASES AND ENERGY REQUIREMENTS
INCLUDING COSTS FOR SLUDGE DISPOSAL
150 mg/l DOSAGE RATE

	Equipment Size				
Description	380 m^3/d (0.1×10^6 gal/d)	3800 m^3/d (1.0×10^6 gal/d)	19,000 m^3/d (5×10^6 gal/d)	38,000 m^3/d (10×10^6 gal/d)	76,000 m^3/d (20×10^6 gal/d)
Powdered Carbon Feed Tanks (2 each) Capacity, gallons (Based on feed concentration of 1 lb carbon/gal water)	1,000	10,000	43,000	87,000	175,000
Feed Rate lb/d	125	1,250	6,250	12,500	25,000
Sludge handling and/or Regeneration System, lb/d dry solids	335	3,350	16,700	33,500	66,700
Annual Operating and Energy Requirements					
Carbon Make-Up lb/d (25% make-up)	125	1,250	2,100	418	8,350
Furnace Power Requirements					
Fuel, Btu/h	N.A.	N.A.	1,300,000	2,500,000	4,500,000
Connected hp	N.A.	N.A.	80	100	140
Manpower Requirements, hours	400	540	9,700	10,000	10,700

TABLE A-18

POWDERED ACTIVATED CARBON
CAPITAL COSTS
INCLUDING COSTS FOR SLUDGE DISPOSAL
150 mg/l DOSAGE RATE

Description	Capital Costs, Dollars				
	380 m^3/d (0.1×10^6 gal/d)	3800 m^3/d (1.0×10^6 gal/d)	19,000 m^3/d (5×10^6 gal/d)	38,000 m^3/d (10×10^6 gal/d)	76,000 m^3/d (20×10^6 gal/d)
Powdered Carbon Feed System	$15,000	$ 45,000	$ 65,000	$ 90,000	$150,000
Solids Dewatering System	--	--	250,000	415,000	615,000
Regenerated Carbon Acid Wash System	--	--	20,000	40,000	60,000
Subtotal	15,000	45,000	335,000	545,000	825,000
Piping (10%)	1,500	4,500	34,000	55,000	83,000
Total Equipment Cost	16,500	49,500	369,000	602,000	908,000
Installation (50)	8,500	24,500	185,000	300,000	454,000
Total Constructed Cost	25,000	74,000	554,000	900,000	1,362,000
Engineering	9,000	13,000	82,000	131,500	207,500
Contingency	9,000	13,000	82,000	131,500	207,500
Subtotal	43,000	100,000	718,000	1,163,000	1,777,000
Activated Carbon Regeneration System (Installed)	--	--	750,000	950,000	1,300,000
Contingency (For Utility Hook-up, etc.)	--	--	160,000	200,000	280,000
Engineering for Carbon Regeneration System	--	--	115,000	150,000	200,000
Total Capital Cost	$43,000	$100,000	$1,743,000	$2,463,000	$3,557,000
Land Requirements, ft^2	100	800	2,000	3,000	4,500

TABLE A-19

POWDERED ACTIVATED CARBON
ANNUAL OPERATING COSTS
INCLUDING CREDIT FOR SLUDGE DISPOSAL
150 mg/l DOSAGE RATE

	Annual Cost, Dollars				
Description	380 m^3/d (0.1×10^6 gal/d)	3800 m^3/d (1.0×10^6 gal/d)	19,000 m^3/d (5×10^6 gal/d)	38,000 m^3/d (10×10^6 gal/d)	76,000 m^3/d (20×10^6 gal/d)
Carbon Make-up	$13,900	$139,000	$207,000	$413,000	$825,000
Furnace Power	--	--	55,000	95,000	165,000
Miscellaneous Power Requirements	1,000	2,000	5,000	8,000	15,000
Labor ($10/man-hour)	4,000	5,400	97,000	100,000	108,000
Sludge Disposal Credit	--	--	(-)250,000	(-)500,000	(-)1,000,000
Maintenance	1,000	2,000	243,000	347,000	491,000
Total Annual Cost	$19,900	$148,400	$357,000	$463,000	$604,000

Note:

The Depreciation factor has been omitted from this analysis due to the fact that it will be included separately in the Economic Impact Analysis Supplement

TABLE A-20

Granular Activated Carbon
Equipment Cost Basis
and Energy Requirements

Description	Equipment Size				
	380 m^3/day (0.1×10^6 gal/d)	3800 m^3/day (1.0×10^6 gal/d)	19,000 m^3/day (5×10^6 gal/d)	38,000 m^3/day (10×10^6 gal/d)	76,000 m^3/day (20×10^6 gal/d)
Activated Carbon Units	Three-4'diam. x 13' high	Three-11' diam. x 18' high	Nine-12' diam. x 25' high	Fifteen-12' diam. x 30' high	Thirty-12' diam. x 30' high
Carbon, ft^3 Total	281	2800	14,000	28,000	56,000
Automatic Controls Included	No	Yes	Yes	Yes	Yes
Furnace size, lb/d of carbon	N.A.	1250	6,250	12,500	25,000
Annual Operating and Energy Requirements					
Carbon Make-up, lb/d (10% make-up)	125	125	625	1,250	2,500
Furnace Power Requirements					
Fuel, Btu/hr	N.A.	500,000	800,000	1,500,000	2,800,000
Connected hp	N.A.	40	50	60	80
Pumping Power Requirements kWh/yr	11,400	114,000	570,000	1,140,000	2,280,000
Manpower Requirements, hours	2,100	9,800	10,500	11,500	12,500

TABLE A-21

GRANULAR ACTIVATED CARBON
CAPITAL COSTS

Description	Capital Costs, Dollars				
	380 m^3/day (0.1×10^6) gal/d	3800 m^3/day (1.0×10^6) gal/d	19,000 m^3/day (5×10^6) gal/d	38,000 m^3/day (10×10^6) gal/d	76,000 m^3/day (20×10^6) gal/d
Activated Carbon Units	$50,000	$325,000	$1,500,000	$2,600,000	$5,000,000
Pumping & Misc. Equip. (10%)	5,000	32,500	150,000	260,000	500,000
Piping (10%)	5,000	32,500	150,000	260,000	500,000
Total Equipment Cost	60,000	390,000	1,800,000	3,120,000	6,000,000
Installation (50%)	30,000	195,000	900,000	1,560,000	3,000,000
Total Constructed Cost	90,000	585,000	2,700,000	4,680,000	9,000,000
Engineering	40,000	85,000	400,000	710,000	1,350,000
Contingency	20,000	80,000	400,000	710,000	1,350,000
Subtotal	150,000	750,000	3,500,000	6,100,000	11,700,000
Activated Carbon Regeneration System (Installed)	-----	300,000	450,000	600,000	750,000
Contingency (For utility hook-up, etc.)	-----	60,000	100,000	120,000	150,000
Engineering for Carbon Regeneration System	-----	50,000	50,000	80,000	100,000
Total Capital Cost	$150,000	$1,160,000	$4,100,000	$6,920,000	$12,700,000
Land Requirements, ft^2	300	1,500	3,500	5,500	12,000

TABLE A-22

GRANULAR ACTIVATED CARBON
ANNUAL OPERATING COSTS

Description	Annual Costs, Dollars				
	380 m^3/day	3800 m^3/day	19,000 m^3/day	38,000 m^3/day	76,000 m^3/day
	(0.1 $\times 10^6$) gal/day	(1.0 $\times 10^6$) gal/day	(5 $\times 10^6$) gal/day	(10 $\times 10^6$) gal/day	(20 $\times 10^6$) gal/day
Carbon Make-Up	$28,000	$28,000	$137,000	$275,000	$550,000
Furnace Power	---	19,000	27,000	46,000	82,000
Pumping	500	5,000	25,000	50,000	100,000
Labor* ($10/manhour)	21,000	98,000	105,000	115,000	125,000
Maintenance (3% of total Capital Cost)	4,500	35,000	123,000	208,000	381,000
Total Annual Cost	$54,000	$185,000	$417,000	$694,000	$1,238,000

NOTE: The depreciation factor has been omitted from this analysis due to the fact that it will be included separately in the Economic Impact Analysis Supplement.

* The manpower requirements were obtained from the "Process Design Manual for Carbon Adsorption," Environmental Protection Agency Technology Transfer Series, October 1973. Labor includes operation, maintenance, and laboratory personnel requirements.

TABLE A-23

SUPPLEMENTAL ECONOMIC COST INFORMATION
CAPITAL AND OPERATING COSTS
FOR 10,000 GALLON PER DAY TREATMENT SYSTEMS

Treatment System	Capital Cost, Dollars	Annual Operating Cost Dollars*
Equalization	$ 12,000	$ 400
Rotating Biological Contactors	50,000	6,100
Filtration	35,000	3,000
Powdered Activated Carbon	35,000	4,300
Granular Carbon	60,000	10,000

TABLE A-24

COOLING TOWER BLOWDOWN RATES
PETROLEUM REFINING INDUSTRY
(MILLION GALLONS PER DAY)

REFINERY NUMBER	BLOWDOWN	REFINERY NUMBER	BLOWDOWN	REFINERY NUMBER	BLOWDOWN
1	0.008	96	6.01	188	1.01
2	0.014	97	0.01	189	Unknown
3	Unknown	98	0.78	190	0.01
4	Not App.	99	Not App.	191	0.485
6	Not App.	100	Not App.	192	0.01
7	0.03	102	Unknown	193	Unknown
8	Unknown	103	0.01	194	2.99
9	0.001	104	2.59	195	Unknown
10	0.015	105	Not App.	196	3.51
11	1.8	106	0.52	197	0.001
12	0.002	107	0.01	199	0.01
13	1.015	108	Unknown	200	0.4
15	0.023	109	0.185	201	0.48
16	0.069	110	Not App.	202	Unknown
17	0.005	111	1.11	203	2.035
18	0.021	112	Unknown	204	1.536
19	0.0015	113	0.109	205	0.6911
20	0.32	114	0.128	206	2.5
21	0.0113	115	0.521	207	0.037
22	0.011	116	0.288	208	0.86
23	Not App.	117	0.50	209	0.095
24	0.065	118	0.012	210	0.015
25	0.167	119	0.031	211	0.279
26	0.0745	120	0.023	212	0.374
29	0.33	121	0.74	213	0.013
30	0.033	122	1.562	214	Unknown
31	0.01	124	0.135	215	Unknown
32	0.84	125	0.114	216	2.42
33	0.11	126	0.120	218	Unknown
35	Not App.	127	0.025	219	0.565
36	0.0055	128	Not App.	220	0.012
37	1.83	129	0.066	221	Unknown
38	0.702	130	Not App.	222	0.20
39	0.06	131	0.120	224	Unknown
40	Unknown	132	0.75	225	0.711
41	1.01	133	1.831	226	Unknown
42	0.012	134	Unknown	227	0.389
43	0.55	135	Unknown	228	0.122
44	Unknown	136	Unknown	229	0.009
45	0.817	137	Unknown	230	0.37
46	0.145	138	0.153	231	Not App.
48	0.141	139	0.006	232	Unknown
49	0.17	140	0.055	233	0.307
50	0.0255	141	Unknown	234	Unknown
51	Not App.	142	0.11	235	0.23
52	Not App.	143	Unknown	236	0.00
53	0.0355	144	0.144	237	0.0015
54	Unknown	145	Unknown	238	0.325
55	Not App.	146	Unknown	239	Unknown
56	0.65	147	0.49	240	0.072
57	6.3	148	0.055	241	0.11
58	0.269	149	0.15	242	0.305
59	0.237	150	Not App.	243	0.125
60	0.85	151	1.50	244	0.0315
61	1.4	152	1.78	245	0.153
62	1.025	153	3.806	246	0.0425
63	0.299	154	0.050	247	0.1166
64	1.0	155	0.098	248	Unknown
65	0.944	156	0.564	249	0.015
66	Unknown	157	0.925	250	Unknown
67	3.23	158	0.067	251	Not App.
68	2.448	159	0.066	252	0.0015
70	Unknown	160	0.042	253	Unknown
71	0.095	161	1.129	254	Unknown
72	0.022	162	0.356	255	Unknown
73	0.138	163	0.642	256	0.0008
74	0.157	165	0.168	257	Not App.
76	0.826	166	0.025	258	0.634
77	0.198	167	1.189	259	Not App.
79	Unknown	168	0.62	260	Not App.
80	0.87	169	1.659	261	0.20
81	0.24	172	0.149	264	Unknown
82	0.006	173	Unknown	265	0.259
83	1.015	174	Not App.	266	Not App.
84	Unknown	175	4.36	278	Unknown
85	2.539	176	0.0026	291	0.00126
87	Not App.	177	0.014	292	Not App.
88	0.073	179	0.149	295	0.158
89	Unknown	180	0.386	296	Not App.
90	0.007	181	5.219	298	Unknown
91	0.0036	182	1.858	302	Not App.
92	2.024	183	0.341	303	Unknown
93	0.021	184	0.521	305	0.010
94	0.432	185	0.322	307	Unknown
95	Unknown	186	0.516	308	Unknown
		187	0.983	309	0.302

TABLE A-25

Chromium Removal Systems
Equipment Cost Basis and Energy Requirements

Description	3.8 m^3/day ($1x10^3$ gal/d)	38 m^3/day ($1x10^4$ gal/d)	380 m^3/day ($1x10^5$ gal/d)	3800 m^3/day ($1x10^6$ gal/d)	19,000 m^3/day ($5x10^6$ gal/d)
Detention Tank, gallons	32	320	3,200	32,000	160,000
Mixer, hp	0.25	0.25	1.5	15	80
Mixing Requirements, kWh/yr	1,650	1,650	9,900	99,000	528,000
Solids Contact Clarifier, diam.	8	8	15	45	100
SO_2 Feed Rate, lb/d	0.4	4	40	400	2,000
Acid Feed Rate, lb/d	0.2	2	20	200	1,000
Caustic Feed Rate, lb/d	2	20	200	2,000	10,000
Pumping Requirements, kWh/yr	23	230	2,300	23,000	115,000
Manpower Requirements, h/yr	520	520	520	1,040	2,080

TABLE A-26

Chromium Removal Systems
Capital and Operating Costs

Description	3.8 m^3/day ($1x10^3$ gal/day)	38 m^3/day ($1x10^4$ gal/day)	380 m^3/day ($1x10^5$ gal/day)	3800 m^3/day ($1x10^6$ gal/day)	19,000 m^3/day ($5x10^6$ gal/day)
Capital Costs, Dollars					
Detention Tank	$ 100	$ 1,000	$ 5,000	$20,000	$50,000
Chemical Feed Systems	5,000	15,000	30,000	40,000	45,000
Automatic Controls	--	10,000	10,000	10,000	10,000
Solids Contact Clarifier	25,000	25,000	35,000	80,000	155,000
Pumps					
Total Equipment Cost	30,100	51,000	80,000	150,000	260,000
Installation (50%)	15,000	25,500	40,000	75,000	130,000
Total Constructed Cost	45,100	76,500	120,000	225,000	390,000
Engineering	6,950	11,750	17,500	37,500	60,000
Contingency	6,950	11,750	17,500	37,500	60,000
Total Capital Cost	$59,000	$100,000	$155,000	$300,000	$510,000
Annual Operating Costs, Dollars*					
SO_2	$ 16	$ 160	$ 1,600	$ 16,000	$ 80,000
Acid	4	40	400	4,000	20,000
Caustic	130	1,300	13,000	130,000	620,000
Mixing	70	70	400	4,000	21,000
Pumping	Negligable	10	100	1,000	5,000
Labor	5,200	5,200	5,200	10,000	20,000
Maintenance (3% of Total Capital Cost)	1,780	3,000	4,800	9,000	16,000
Total Annual Cost	$ 7,200	$ 9,780	$ 25,500	$174,000	$782,000

*Note: The depreciation factor has been omitted from this analysis due to the fact that it will be included separately in the Economic Impact Analysis Supplement.

TABLE A-27

Wastewater Recycle - Capital and Operating Costs

Description	2.3 m^3/hr (10 gpm)	16 m^3/hr (70 gpm)	80 m^3/hr (350 gpm)	160 m^3/hr (700 gpm)	320 m^3/hr (1400 gpm)	800 m^3/hr (3500 gpm)
	Capital Costs, Dollars - Per Mile					
Piping:						
Piping, installed, per mile	$32,000	$53,000	$100,000	$135,000	$175,000	$243,000
Misc. Costs (15%)	5,000	8,000	15,000	20,000	26,000	36,000
Total Constructed cost, per mile	37,000	61,000	115,000	155,000	201,000	279,000
Engineering (15%)	6,000	9,000	18,000	23,000	30,000	42,000
Contingency	7,000	10,000	17,000	22,000	29,000	42,000
Piping-total capital costs per mile	$50,000	$80,000	$150,000	$200,000	$260,000	$363,000
Pumps:						
Pumps and associated equipment installed (10% of piping cost)	5,000	8,000	15,000	20,000	26,000	37,000
Total capital costs per mile	$55,000	$88,000	$165,000	$220,000	$286,000	$400,000
(Minimum pumping costs regardless of distance)	5,000	6,000	12,000	18,000	24,000	40,000
	Annual Operating Costs, Dollars - Per Mile					
Pumping costs per mile, per year	$100	$ 700	$2600	$4500	$ 9200	$24,300
Maintenance (1.5% of capital costs) per mile, per year	800	1300	2500	3300	4300	6,000
Total Annual operating cost	$900	$2000	$5100	$7800	$13,500	$30,300

Note: The Depreciation factor has been omitted from this analysis due to the fact that it will be included separately in the Economic Input Analysis Supplement.

TABLE A-28

Water Softening of Recycled Wastewater
Capital Costs

Description	Capital Costs, Dollars					
	2.3 m^3/hr (10 gpm)	16 m^3/hr (70 gpm)	80 m^3/hr (350 gpm)	160 m^3/hr (700 gpm)	320 m^3/hr (1400 gpm)	800 m^3/hr (3500 gpm)
Solids Contact Clarifier (Diameter, ft)	$ 25,000 (8)	$ 30,000 (11)	$ 45,000 (23)	$ 65,000 (32)	$ 80,000 (45)	$125,000 (72)
Chemical Feed System(s)	5,000	7,000	10,000	15,000	25,000	50,000
Filter Unit (Diameter, ft)	15,000 (3)	25,000 (8)	30,000 (11)	40,000 (15)	80,000 (two-15' units)	150,000 (three-20' units)
Subtotal	45,000	62,000	85,000	120,000	185,000	325,000
Auxiliary Equipment	5,000	8,000	10,000	15,000	20,000	35,000
Total Capital Cost	50,000	70,000	95,000	135,000	205,000	360,000
Installation(50%)	25,000	35,000	50,000	70,000	100,000	180,000
Total Constructed Cost	75,000	105,000	145,000	205,000	305,000	540,000
Engineering	15,000	20,000	25,000	30,000	45,000	80,000
Contingency	15,000	20,000	25,000	30,000	45,000	80,000
Total Capital Costs	$105,000	$145,000	$195,000	$265,000	$395,000	$700,000

TABLE A-29

CAPITAL AND OPERATING COSTS BY REFINERY NUMBER
ECONOMIC COSTS, DOLLARS

REFINERY NUMBER	OPTION 1		OPTION 2,3	
	CAPITAL COSTS	ANNUAL OPERATING COSTS	CAPITAL COSTS	ANNUAL OPERATING COSTS
1	131,000	8,600	181,000	30,100
2	76,000	5,900	126,000	14,900
3	50,000	4,700	85,000	9,700
6	86,000	6,700	171,000	14,700
7	70,000	5,600	140,000	12,600
9	15,000	3,200	67,000	9,400
10	70,000	5,600	140,000	12,600
11	178,000	6,500	238,000	73,500
12	145,000	5,200	586,000	32,200
13	No cost - considered presently indirect discharger only.			
19	No cost - insignificant flow.			
20	200,000	15,000	275,000	165,000
24	73,000	6,900	313,000	22,900
30	325,000	19,800	375,000	43,800
32	750,000	29,300	4,750,000	122,000
37	610,000	32,300	2,210,000	117,000
38	No cost - considered presently indirect discharger only			
40	935,000	47,300	1,060,000	558,000
41	550,000	37,500	6,950,000	328,000
43	300,000	17,500	2,400,000	120,000
46	338,000	17,500	398,000	90,500
49	110,000	7,800	230,000	17,800
50	180,000	6,600	745,000	40,600
51	1,420,000	606,000	3,690,000	942,000
52	166,000	10,100	406,000	26,100
53	65,000	2,200	100,000	20,200
54	53,000	4,000	88,000	15,000
56	645,000	35,800	1,550,000	83,800
57	1,280,000	121,000	1,380,000	683,000
59	385,000	19,100	460,000	104,000
60	0	0	75,000	145,000
61	650,000	33,800	730,000	238,000
62	400,000	24,500	500,000	397,000
63	250,000	18,000	2,150,000	108,000
64	485,000	32,500	560,000	225,000
65	720,000	47,600	820,000	330,000
67	4,510,000	360,000	7,760,000	720,000
68	1,385,000	88,000	1,490,000	464,000
70	190,000	10,700	225,000	28,700

TABLE A-29

CAPITAL AND OPERATING COSTS BY REFINERY NUMBER
ECONOMIC COSTS, DOLLARS

REFINERY NUMBER	OPTION 1		OPTION 2,3	
	CAPITAL COSTS	ANNUAL OPERATING COSTS	CAPITAL COSTS	ANNUAL OPERATING COSTS
71	145,000	9,300	345,000	24,300
72	50,000	5,700	85,000	22,700
73	No cost - considered presently indirect discharger only.			
74	72,000	2,500	242,000	15,500
76	380,000	26,400	1,630,000	92,400
77	70,000	6,700	110,000	34,700
80	91,000	6,800	181,000	15,800
81	270,000	21,100	1,150,000	69,100
83	210,000	17,000	295,000	209,000
84	520,000	25,400	595,000	164,000
85	300,000	22,000	395,000	286,000
87	220,000	15,400	315,000	24,400
88	60,000	6,200	235,000	19,200
89	79,000	6,100	156,000	15,100
90	58,000	4,700	118,000	11,700
91	45,000	3,400	80,000	7,400
92	1,680,000	78,100	4,010,000	415,000
93	51,000	4,000	86,000	10,000
94	428,000	27,400	503,000	172,000
96	600,000	44,300	3,080,000	387,000
97	85,000	6,500	120,000	17,500
98	650,000	30,800	2,250,000	111,000
99	45,000	5,000	128,000	13,000
100	30,000	1,100	65,000	10,600
102	230,000	13,600	305,000	32,600
103	48,000	6,100	157,000	14,100
104	500,000	28,000	4,600,000	208,000
105	305,000	22,200	380,000	203,000
106	200,000	13,000	1,300,000	73,000
107	No cost - will discharge to POTW in future.			
108	70,000	5,400	105,000	13,400
109	145,000	9,300	185,000	119,000
110	No cost - will discharge to POTW in future.			
112	295,000	184,000	465,000	31,400
113	90,000	7,800	420,000	28,800
114	No cost - will discharge to POTW in future.			
115	0	0	90,000	216,000
116	400,000	21,000	1,300,000	69,000
117	677,000	25,300	1,270,000	59,300

TABLE A-29

CAPITAL AND OPERATING COSTS BY REFINERY NUMBER
ECONOMIC COSTS, DOLLARS

REFINERY NUMBER	OPTION 1		OPTION 2,3	
	CAPITAL COSTS	ANNUAL OPERATING COSTS	CAPITAL COSTS	ANNUAL OPERATING COSTS
118	20,000	900	75,000	7,400
119	60,000	2,000	175,000	12,000
120	55,000	1,800	155,000	10,800
121	1,000,000	47,500	4,100,000	197,500
122	1,320,000	115,000	5,720,000	319,000
124	220,000	12,400	585,000	35,400
125	210,000	12,000	550,000	33,500
126	760,000	54,500	5,160,000	265,000
127	126,000	8,400	276,000	20,400
129	221,000	15,600	521,000	24,600
131	300,000	17,500	390,000	254,000
132	740,000	108,000	3,070,000	454,000
133	1,560,000	172,000	1,690,000	772,000
134	940,000	56,500	1,040,000	381,000
142	No cost - will discharge to POTW in future.			
143	No cost - will discharge to POTW in future.			
144	110,000	7,700	223,000	17,700
146	220,000	15,300	315,000	24,300
147	109,000	8,700	149,000	59,700
149	570,000	31,700	1,370,000	73,700
150	372,000	18,900	424,000	99,900
151	1,230,000	62,000	3,930,000	194,000
152	1,530,000	155,000	1,650,000	767,000
153	0	0	100,000	300,000
154	310,000	19,400	1,010,000	59,400
155	95,000	7,000	190,000	16,000
156	115,000	9,000	590,000	37,500
157	580,000	28,500	655,000	189,000
158	243,000	13,400	283,000	62,400
159	158,000	10,200	383,000	25,700
160	56,000	6,500	91,000	27,000
161	80,000	7,200	355,000	25,200
162	220,000	17,000	295,000	215,000
163	165,000	11,400	865,000	53,400
165	162,000	10,000	396,000	26,000
167	1,680,000	111,000	1,780,000	507,000
168	0	0	80,000	228,000
169	2,220,000	172,000	2,340,000	840,000
172	320,000	24,000	370,000	89,000
173	255,000	17,700	295,000	60,700

TABLE A-29

CAPITAL AND OPERATING COSTS BY REFINERY NUMBER
ECONOMIC COSTS, DOLLARS

REFINERY NUMBER	OPTION 1		OPTION 2,3	
	CAPITAL COSTS	ANNUAL OPERATING COSTS	CAPITAL COSTS	ANNUAL OPERATING COSTS
174	244,000	16,900	674,000	42,900
175	No cost - will discharge to POTW in future.			
176	185,000	11,000	470,000	30,000
177	485,000	28,500	535,000	93,500
179	158,000	9,800	383,000	25,600
180	565,000	46,100	640,000	263,000
181	980,000	106,000	3,540,000	448,000
183	106,000	8,500	526,000	33,400
184	150,000	12,000	225,000	112,000
186	580,000	26,500	655,000	171,500
189	50,000	3,700	103,000	9,900
190	38,000	3,800	60,000	6,400
194	2,870,000	154,000	12,200,000	650,000
196	2,230,000	255,000	5,330,000	611,000
197	35,000	3,000	85,000	9,000
199	155,000	9,500	227,000	16,500
201	209,000	7,700	269,000	87,700
204	268,000	18,700	358,000	283,000
205	890,000	48,400	2,590,000	133,000
208	420,000	25,000	520,000	415,000
210	35,000	3,200	70,000	8,200
211	0	0	60,000	69,000
212	0	0	50,000	61,000
213	71,000	5,700	144,000	12,700
216	1,000,000	66,800	4,250,000	424,000
219	0	0	850,000	48,000
221	600,000	423,000	690,000	301,000
222	235,000	17,000	510,000	35,000
226	63,000	5,000	128,000	12,000
227	0	0	60,000	96,000
230	125,000	9,400	645,000	40,400
231	No cost - will discharge to POTW in future.			
232	0	0	60,000	90,000
233	385,000	19,400	445,000	103,400
234	385,000	19,400	445,000	103,400
235	400,000	24,000	475,000	144,000
236	100,000	7,100	135,000	20,100
237	55,000	4,500	90,000	10,500
238	793,000	45,100	868,000	196,000

TABLE A-29

CAPITAL AND OPERATING COSTS BY REFINERY NUMBER
ECONOMIC COSTS, DOLLARS

REFINERY NUMBER	OPTION 1		OPTION 2 ,3	
	CAPITAL COSTS	ANNUAL OPERATING COSTS	CAPITAL COSTS	ANNUAL OPERATING COSTS
239	110,000	7,700	145,000	24,200
240	145,000	9,100	185,000	33,600
241	205,000	11,800	250,000	51,800
242	70,000	6,700	110,000	34,700
243	55,000	6,000	200,000	17,500
252	110,000	7,700	225,000	17,700
255	60,000	2,000	175,000	12,000
256	80,000	7,300	365,000	26,300
257	590,000	29,000	1,990,000	101,000
258	165,000	11,400	225,000	95,400
259	590,000	29,300	665,000	198,000
260	58,000	4,400	116,000	10,700
261	385,000	22,100	433,000	261,000
265	248,000	13,700	296,000	64,700
266	410,000	23,200	470,000	81,200
292	No cost - insignificant flow.			
295	315,000	20,100	355,000	45,100
309	425,000	59,100	470,000	99,100

TABLE A-30

CAPITAL AND OPERATING COSTS

INDIRECT DISCHARGE - OPTION 1

Refinery Code No.	Cooling Tower Blowdown gal/day	Chromium Removal, $ Capital Cost	Chromium Removal, $ Annual Operating Cost	Piping Cost, $ Capital Cost	Piping Cost, $ Annual Operating Cost	Total Cost, $ Capital Cost	Total Cost, $ Annual Operating Cost
8	1,250**	63,000	7,300	*	*	63,000	7,300
13	1,020,000	300,000	175,000	320,000	11,000	620,000	186,000
14	7,700	94,000	8,000	20,000	400	114,000	8,400
16	69,300	143,000	20,000	45,000	900	188,000	20,900
18	21,500	115,000	12,500	30,000	400	145,000	12,900
21	11,300	102,000	10,000	*	*	102,000	10,000
23	Does Not Have Cooling Tower +						
25	167,000	172,000	40,000	60,000	1,600	232,000	41,600
29	325,000	207,000	70,000	150,000	4,200	357,000	74,200
31	10,000	100,000	9,800	*	*	100,000	9,800
33	110,000	156,000	28,000	50,000	1,100	206,000	29,100
38	702,000	265,000	130,000	160,000	5,000	425,000	135,000
45	817,000	280,000	150,000	200,000	6,500	480,000	157,000
58	269,000	194,000	60,000	90,000	2,500	284,000	62,500
73	139,000	165,000	35,000	60,000	1,300	225,000	36,300

TABLE A-30

Refinery Code No.	Cooling Tower Blowdown gal/day	Chromium Removal, $ Capital Cost	Chromium Removal, $ Annual Operating Cost	Piping Cost, $ Capital Cost	Piping Cost, $ Annual Operating Cost	Total Cost, $ Capital Cost	Total Cost, $ Annual Operating Cost
78	15,000	108,000	10,000	35,000	500	143,000	10,500
79	No Cost - Unknown Flow						
86	148,000	166,000	35,000	45,000	1,100	211,000	36,100
107	10,000	100,000	10,000	*	*	100,000	10,000
110	No Cooling Tower +						
111	1,110,000	310,000	188,000	160,000	5,600	470,000	194,000
114	Non Chromium Treatment ++						
128	No Cooling Tower +						
130	No Cooling Tower +						
142	110,000	156,000	28,000	60,000	1,400	216,000	29,400
143	Non Chromium Treatment ++						
145	1,000**	59,000	7,200	*	*	59,000	7,200
148	Non Chromium Treatment ++						
166	25,000	118,000	12,000	*	*	118,000	12,000
175	4,360,000	487,000	628,000	485,000	34,200	972,000	662,000
182	1,860,000	370,000	285,000	630,000	28,700	1,000,000	314,000
188	1,010,000	300,000	175,000	200,000	7,000	500,000	182,000

TABLE A-30

Refinery Code No.	Cooling Tower Blowdown gal/day	Chromium Removal, $ Capital Cost	Chromium Removal, $ Annual Operating Cost	Piping Cost, $ Capital Cost	Piping Cost, $ Annual Operating Cost	Total Cost, $ Capital Cost	Total Cost, $ Annual Operating Cost
193	130**	59,000	7,200	*	*	59,000	7,200
195	No Cooling Tower +						
200	395,000	220,000	80,000	65,000	2,000	285,000	82,000
203	2,040,000	382,000	308,000	680,000	31,800	1,062,000	340,000
206	2,000	70,000	8,000	*	*	70,000	8,000
207	36,500	126,000	15,000	40,000	700	166,000	15,700
220	Non Chromium Treatment ++						
224	Non Chromium Treatment ++						
225	Non Chromium Treatment ++						
228	122,000	166,000	30,000	50,000	1,000	216,000	31,000
229	8,500	98,000	9,400	*	*	98,000	9,400
231	No Cooling Towers +						
264	No Cooling Towers +						
291	126,000	162,000	30,000	40,000	800	202,000	30,800
305	11,600**	103,000	11,300	*	*	103,000	11,300
TOTAL		5,916,000	2,633,000	3,675,000	150,000	9,591,000	2,783,000

NOTE:

* These Refineries have only one cooling tower and so piping cost is excluded.

** Actual Cooling Tower blowdown data were not available; the blowdown rate is assumed to be 25% of total wastewater generated.

\+ These Refineries do not have any cooling towers.

++ These Refineries do not use Chromium in the cooling towers.

TABLE A-31

CAPITAL AND OPERATING COSTS

INDIRECT DISCHARGE - OPTION 2

Refinery Code No.	Capital Costs, $	Annual Operating Costs, $
8	No Cost - Insignificant Flow	
13	5,800,000	626,000
14	315,000	51,400
16	826,000	136,000
18	495,000	58,000
21	373,000	62,500
23	315,000	60,200
25	375,000	54,500
29	4,650,000	521,000
31	247,000	54,700
33	1,090,000	152,000
38	4,350,000	455,000
45	3,900,000	419,000
58	1,900,000	159,000
73	915,000	84,100
78	1,390,000	119,000
79	No Cost - Unknown Flow	
86	800,000	104,000
107	255,000	57,900
110	250,000	56,700
111	2,450,000	211,000
114	683,000	103,000
128	277,000	29,700
130	1,310,000	421,000

TABLE A-31

Refinery Code No.	Capital Costs, $	Annual Operating Costs, $
142	2,450,000	211,000
143	2,190,000	174,000
145	247,000	54,700
148	493,000	111,000
166	273,000	96,900
175	13,300,000	2,360,000
182	7,000,000	781,000
188	3,660,000	340,000
193	247,000	54,700
195	247,000	54,700
200	1,150,000	106,000
203	13,800,000	1,510,000
206	437,000	95,800
207	375,000	92,500
220	258,000	56,700
224	655,000	112,000
225	2,220,000	177,000
228	710,000	112,000
229	242,000	25,400
231	1,110,000	378,000
264	250,000	55,500
291	250,000	51,200
305	277,000	29,700

APPENDIX B

RAW PLANT DATA

The purpose of this appendix is to present the raw analytical results for both the 17 refineries' screening program, and the pretreatment program. (It should be noted that the "screening program' is referred to in this appendix as the RSKERL and B&R sampling program). These results are presented in Tables B-1 through B-16, which follow.

Tables B-1 through B-6 contain the analytical results for the 17 direct discharge refineries.

Tables B-7 through B-11 include results from the first week of sampling for the pretreatment program. These tables report pollutant characteristics for wastewater leaving Refinery No. 25 and at various points in the treatment train of the first POTW.

Tables B-12 through B-16 contain the analytical results from the second week of the pretreatment program. Included in these tables are effluent characteristics for Refinery Nos. 13, 16, 21, 43, and 45, as well as the wastewater pollutant characteristics at various stages in the treatment train of the second POTW.

TABLE B-1

Analytical Results for Traditional Parameters for the RSKERL and B&R Sampling Program

Sample - Day	Concentration (mg/l)											
	BOD-1	BOD-2	BOD-3	COD	TOC	TSS	NH_3	Cr^{+6}	S^{-2}	O&G	pH	Flow (MGD)
Refinery A												
Intake - 1	L2	L2		4	1	5	L1.0	L.02	L.1		7.6	
Intake - 2	L1	L1		4	2	4	11	L.02	L.1		9.0	
Intake - 3	2	4		8	2	L1	1.0	L.02	.2		8.8	
Separator effluent - 1	20	24		130	36	490	13	.09	9.0		8.6	
Separator effluent - 2	20	18		91	25	390	11	.03	6.9		8.5	
Separator effluent - 3	25	30		99	26	260	11	.05	8.5		9.0	
Final effluent - 1	L2		L2	36	11	44	16	.04	.2		6.9	.433
Final effluent - 2	L2		L2	40	11	30	11	L.02	.2		7.4	.427
Final effluent - 3	3		2	28	11	42	9.0	L.02	.4		7.0	.432
Refinery B												
Intake - 1	L3	L3		9	13	9	L1.0	L.02	.2	19	8.2	3.91
Intake - 2	L3	L3		9	25	13	L1.0	.02	.2	7	8.1	3.86
Intake - 3	2	L3		9	18	11	L1.0	L.02	.4	6	8.3	4.12
DAF effluent - 1	130	140		420	100	38	8.4	L.02	.6	33	5.2	1.78
DAF effluent - 2	170	110		440	110	50	7.3	.10	1.0	18	8.6	1.81
DAF effluent - 3	270	220		500	110	38	6.7	L.02	1.2	11	9.5	1.81
Final effluent - 1	15		14	150	47	22	18	L.02	.5	53	7.2	1.69
Final effluent - 2	9		7	120	39	24	16	L.02	.5	24	7.6	2.07
Final effluent - 3	30		7	120	43	20	18	L.02	.6	15	7.4	1.48
Refinery C												
Intake - 1	2			1	12	L1	L1.0	L.02	L.5	8	7.6	
Intake - 2	L3			1	8	L1	L1.0	L.02	L.5	10	7.8	
Intake - 3	2			2	5	L1	L1.0	L.02	.3	4	7.4	
Separator effluent - 1	150		110	380	88	22	52	.05	L.5	150	8.6	
Separator effluent - 2	160		120	370	75	36	50	L.02	3.8	100	9.1	
Separator effluent - 3	78		85	220	49	26	13	L.02	.3	28	8.7	
Treated effluent - 1	28			130	44	20	8.4	L.02	L.5	8	7.8	.0715
Treated effluent - 2	34			120	39	18	5.6	L.02	L.5	15	7.7	.0848
Treated effluent - 3	40			120	41	28	4.5	L.02	.2	11	7.6	.1526
Final effluent - 1	37			130	42	20	7.8	L.02	.5	7	8.0	.1787
Final effluent - 2	40			130	37	22	17	L.02	.5	11	8.1	.1411
Final effluent - 3	45			100	36	16	3.9	L.02	.4	11	7.6	.2357

Note: L - Less than
G - Greater than

BOD-1 indicates analytical method used seed from a domestic sewage treatment plant.

BOD-2 indicates analytical method used seed from refinery final effluent.

BOD-3 indicates analytical method where no seed was used.

TABLE B-1

Analytical Results for Traditional Parameters for the RSKERL and B&R Sampling Program

Sample - Day	Concentration (mg/l)											
	BOD-1	BOD-2	BOD-3	COD	TOC	TSS	NH_3	Cr^{+6}	S^{-2}	O&G	pH	Flow (MGD)
Refinery D												
Intake - 1	L5	20		20	10	24	L1.0	L.02	L.1		7.3	
Intake - 2	1	4		4	5	32	2.2	L.02	L.1		7.4	
Intake - 3	3	6		4	8	16	2.0	L.02	L.1		7.3	
DAF effluent - 1	160	L220		1000	300	60	36	L.02	15		8.9	.932*
DAF effluent - 2	140			500	150	36	29	L.02	18		8.5	
DAF effluent - 3	120	L360		390	100	32	40	L.02	15		8.6	
Final effluent - 1	50		40	820	290	64	36	L.02	1.7		7.7	.932*
Final effluent - 2	210		62	670	220	60	42	L.02	1.1		7.7	
Final effluent - 3	150		90	490	150	60	39	.03	.8		7.6	
Refinery E												
Intake - 1	3	4		43	15	14	1.0	L.02	L.1		7.7	18.00
Intake - 2	2	3		59	15	19	7.8	L.02	L.1		7.6	16.56
Intake - 3	2	3		39	15	28	7.8	L.02	L.1		7.5	18.00
DAF effluent - 1	54	56		160	48	17	13	L.02	1.8		7.3	
DAF effluent - 2	52	41		160	42	13	12	L.02	1.5		7.1	
DAF effluent - 3	45	44		150	39	16	15	L.02	1.5		7.2	
Final effluent - 1	18		18	47	10	9	35	L.02	.3		7.6	5.02
Final effluent - 2	2		L1	75	7	20	11	L.02	.5		7.5	4.59
Final effluent - 3	L1		L1	55	13	13	13	L.02	.6		7.5	4.61
Refinery F												
Intake - 1	40	50		340	96	68	1.7	L.02	1.6		8.2	1.5*
Intake - 2	40	52		350	110	68	68	.02	.9		8.1	
Intake - 3	42		35	340	97	40	63	L.02	.7		8.0	
Cooling tower blowdown-1	25	42		210	62	64	3.9	.05			7.3	0.17*
Cooling tower blowdown-2	130	G160		300	78	76	10	.09	1.0		8.1	
Cooling tower blowdown-3	47	36		350	95	80	19	.41	L.1		6.8	
Final effluent - 1	18		18	260	110	110	3.9	L.02			8.6	0.017*
Final effluent - 2	36		36	270	75	96	2.8	L.02	2.0		8.5	
Final effluent - 3	20		18	260	82	100	3.9	.03	L.1		8.6	

* Average flow during 72-hour sampling period.

TABLE B-1

Analytical Results for Traditional Parameters for the RSKERL and B&R Sampling Program

Sample-Day	Concentration (mg/l)											
	BOD-1	BOD-2	BOD-3	COD	TOC	TSS	NH_3	Cr^{+6}	S^{-2}	O&G	pH	Flow (MGD)
Refinery G												
Intake - 1	L3	L3	L3	20	12	L1	L1.0	L.02	L.1	23	7.6	3.22
Intake - 2	L3	L3		28	16	18	L1.0	L.02	.6	7	7.6	3.13
Intake - 3	L3	L3		24	8	16	L1.0	L.02	.3	8	7.7	3.20
Separator effluent - 1	240	280	260	820	240	54	20	.02	22	130	10.2	
Separator effluent - 2	250	240				252		.02	32	56	10.3	
Separator effluent - 3	260	290		860	220	112	8.0	L.02	28	110	10.6	
DAF effluent - 1	240	270	250	860	200	64	14	.02	18	190	9.9	
DAF effluent - 2	280	280		900	360	152	12	L.02	28	250	10.2	
DAF effluent - 3	220	260		1200	290	176	10	L.02	30	220	10.4	
Final effluent - 1	15		12	200	60	36	15	L.02	2.0	24	8.3	2.50
Final effluent - 2	10		L10	220	64	76	15	L.02	1.8	9	8.0	2.27
Final effluent - 3	6		L14	210	56	64	12	L.02	2.1	10	8.0	2.04
Refinery H												
Intake - 1	L2	L2		12	9	14	L1.0	L.02	.3	31	8.2	35.*
Intake - 2	L2	L2				113		L.02	L.1	13	8.5	
Intake - 3	2	2		23	14	167	L1.0	.04	.1	8	7.9	
Separator effluent - 1	60	80				120		L.02	3.7	80	7.3	
Separator effluent - 2	20	L15		200	57	66	7.3	.02	4.4	51		5.04*
Separator effluent - 3	30	31		180	50	121	6.2	.04	1.2	24	8.6	
Final effluent - 1	L6		L6	40	20	8	6.2	L.02	.2	37	7.4	1.2*
Final effluent - 2	L6		L6	36	18	10	5.0	L.02	.2	13	8.4	
Final effluent - 3	3		3	48	21	8	5.0	L.02	.1	3	7.8	
Refinery I												
Intake - 1	L3			4	5	L1	L1.0		.5	2	7.8	3.53
Intake - 2	L3			5	4	L1	L1.0			4	8.6	3.53
Intake - 3	L3					2			.4	5	7.6	3.53
Separator effluent - 1	88		77	260	89	38	3.4		.5	30	5.7	2.99
Separator effluent - 2	76	32		260	80	46	4.5			25	9.1	3.26
Separator effluent - 3	55	66		250	75	32	5.0		.6	42	8.9	3.29
Final effluent-1	L12			88	34	6	L1.0		.7	5	7.1	2.75
Final effluent-2	L12		L12	76	29	8	L1.0			3	7.2	2.27
Final effluent-3	L12		L12	72	29	10	1.7		.4	9	7.5	2.44

*Average flow during the sampling period.

TABLE B-1

Analytical Results for Traditional Parameters for the RSKERL and B&R Sampling Program

	Concentration (mg/l)											
	BOD-1	BOD-2	BOD-3	COD	TOC	TSS	NH_3	Cr^{+6}	S^{-2}	O&G	pH	Flow (MGD)
Refinery J												
Intake-1	L5			16	14	10	2.0	L.02	L.1	16	7.5	
Intake-2	2			40	19	3	L1.0	.02	L.1	11	7.8	
Intake-3			3	20	10	1	L1.0	L.02	.3	11	7.3	
Separator 1 effluent-1	51		39	210	60	54	2.0	.02	.7	74	8.9	
Separator 1 effluent-2	76		70	160	39	82	1.0	L.02	1.8	120	8.2	
Separator 1 effluent-3			50	160	55	22	1.7	.03	1.8	36	7.9	
Separator 2 effluent-1	85		G84	310	57	64	8.4	L.02	5.5	84	8.2	
Separator 2 effluent-2	G84		G84	690	200	196	14	.04	11	140	8.2	
Separator 2 effluent-3			G84	660	230	108	8.4	.02	15	250	8.2	
Separator 3 effluent-1	15		58	160	52	62	3.0	.02	1.8	25	7.4	.464
Separator 3 effluent-2	20		22	180	45	38	6.2	.02	5.3	23	7.3	.122
Separator 3 effluent-3			32	220	63	34	4.5	.04	1.5	54	7.3	.572
Separator 4 effluent-1	G80		100	310	66	36	3	L.02	6.8	65	7.7	
Separator 4 effluent-2	70		55	270	58	26	7.3	L.02	9.1	34	7.3	
Separator 4 effluent-3			60	430	97	94	8.4	.05	5.1	150	7.6	
Separator 5 effluent-1	10		10	83	23	26	2.0	.14	L.1	7	8.1	
Separator 5 effluent-2	12		10	75	22	16	1.0	.13	1.0	9	8.1	
Separator 5 effluent-3			18	92	31	48	L1.0	.09	12	25	7.1	
Bio-pond influent-1	96			610	50	24	22	.08	14	11	7.4	
Bio-pond influent-2	G84			570	100	16	24	.10	49	9	7.7	
Bio-pond influent-3			G84	480	120	18	20	.08	3.5	20	7.5	
Final effluent-1	6			87	34	20	6.8	L.02	.2	20	7.0	2.70
Final effluent-2	6			87	26	7	5.0	L.02	1.0	6	7.3	2.55
Final effluent-3			6	92	32	8	5.6	L.02	.9	16	7.9	2.73

TABLE B-1

Analytical Results for Traditional Parameters for the RSKERL and B&R Sampling Program

Sample-Day	Concentration (mg/l)											
	BOD-1	BOD-2	BOD-3	COD	TOC	TSS	NH_3	Cr^{+6}	S^{-2}	O&G	pH	Flow (MGD)
Refinery K												
Intake-1	4		4	27		12	L1.0	L.02	.4	9	8.1	14.1*
Intake-2	4		4	23	11	14	L1.0	L.02	.4	6		
Intake-3	L6		L6	24	10	10	1.0	L.02	.3	14	7.4	
DAF effluent-1	L120	L120	80	530	180	260	6.7	L.02	.8	590	7.8	5.4*
DAF effluent-2	220	210	200	1000	350	380	6.7	.04	1.6	190		
DAF effluent-3	L120	L120	L120	540	180	210	6.2	.02	.6	98	7.3	
Final effluent-1	8		7	96		21	2.2	L.02	.5	31	7.7	5.4*
Final effluent-2	L6		6	130	39	16	3.4	L.02	.3	15		
Final effluent-3	11		10	140	42	32	3.9	L.02	.3	12	7.3	
Refinery L												
Intake-1	2	3	2	56	13	290	L1.0	.25	.1		7.2	
Intake-2		L5	L3	20	10	220	L1.0	L.02	1.0		7.5	
Intake-3	L2	L3	L5	24	6	120	L1.0	.05	1.0		7.1	
Separator 1 effluent-1	100	130	120	390	110	140	6.2	L.02	.9		7.9	3.88
Separator 1 effluent-2		100	98	350	110	110	10	L.02	1.5		8.3	3.86
Separator 1 effluent-3	180	170	150	530	140	120	20	.07	1.2		8.6	4.28
Separator 2 effluent-1	32	38	34	200	49		7.8	.05	.8		8.0	7.15
Separator 2 effluent-2		31	42	210	56	36	15	L.02	1.7		6.3	5.37
Separator 2 effluent-3	40	42	40	170	46	48	9.0	L.02	.9		8.4	4.98
Final effluent-1	3		3	75	19	34	L1.0	L.02	.4		7.2	11.03
Final effluent-2			L4	44	15		3.4	.11	.3		6.9	9.23
Final effluent-3	11		8	71	14	21	3.0	.01	.9		7.2	9.26
Refinery M												
Intake-1	L6		L6	10	6	L1	L1.0	L.02	.2	4	8.0	
Intake-2	L6			9	10	L1	L1.0	L.02	.2	8	8.0	
Intake-3	L6		L6	8	4	L1	L1.0	L.02	.3	11	8.1	
DAF effluent-1	51	25	34	260	72	18	13	.75	.6	16	6.9	
DAF effluent-2	50	52	40	220	62	9	9.5	L.02	.5	18	8.4	
DAF effluent-3	36	40	34	220	66	7	12	L.02	.4	18	8.2	
Final effluent-1	L12		L12	92	18	8	L1.0	L.02	.4	13	7.7	1.64
Final effluent-2	L6		L6	86	16	15	L1.0	L.02	.4	12	7.9	1.52
Final effluent-3	L6		L6	73	14	11	1.0	L.02	.3	14	7.8	1.47

Average flow during 72-hour sampling period.

TABLE B-1

Analytical Results for Traditional Parameters for the RSKERL and B&R Sampling Program

	Concentration (mg/l)											
	BOD-1	BOD-2	BOD-3	COD	TOC	TSS	NH_3	Cr^{+6}	S^{-2}	O&G	pH	Flow (MGD)
Refinery N												
Intake-1			L1	40	12	18	L1.0	L.02	.3		8.4	24.69
Intake-2		L5		16	8	22	L1.0	.07	.3		7.7	26.84
Intake-3		L2		28	12	26	L1.0	.09	1.1		7.3	25.91
Separator effluent-1			83	360	88	68	12	L.02	2.9		8.1	15.25
Separator effluent-2			100	430	120	112	15	L.02	8.1		8.1	15.25
Separator effluent-3			120	440	100	76	13	L.02	9.2		7.9	18.25
Chem. plant effluent-1			74	340	93	28	1.1	L.02	.7		6.8	0.8
Chem. plant effluent-2			140	810	240	36	L1.0	L.02	.9		6.6	0.95
Chem. plant effluent-3		34		240	69	40	2.0	L.02	.9		6.7	0.9
Final effluent-1			10	140	33	50	6.2	L.02	.6		8.6	14.75
Final effluent-2			8	120	33	40	6.7	L.02	.9		7.4	15.9
Final effluent-3			10	140	36	44	3.0	L.02	.9		7.4	17.6
Refinery O												
Intake-1	L2			11	10	10	L1.0	L.02	.5		7.1	
Intake-2	L5	L5		26	21	10	L1.0	.02	L.1		6.8	
Intake-3	L3	L2		12	25	14	L1.0	.02	.1		7.0	
DAF effluent-1	120			380	120	21	5.3	L.02	3.9		8.4	2.88*
DAF effluent-2	100	75		410	110	32	6.4	L.02	4.1		8.6	
DAF effluent-3	85	88		480	180	42	18	L.02	2.9		8.8	
Final effluent-1	6			150	48	24	2.5	L.02	.6		7.9	2.88*
Final effluent-2	L10		L10	140	40	26	3.1	.02	.5			
Final effluent-3	94		L8	120	52	24	2.5	L.02	.4		7.8	

*Average flow during 72-hour period.

TABLE B-1

Analytical Results for Traditional Parameters for the RSKERL and B&R Sampling Program

Sample-Day	Concentration (mg/l)											
	BOD-1	BOD-2	BOD-3	COD	TOC	TSS	NH_3	Cr^{+6}	S^{-2}	O&G	pH	Flow (MGD)
Refinery P												
Intake-1	L2			4	3	L1	L1.0	L.02	L.1		7.0	
Intake-2	L5	L5		6	7	L1	L1.0	L.02	L.1		6.8	
Intake-3	L2	L2		L4	7	L1	L1.0	L.02	L.1		6.3	
Separator effluent-1	320			600	170	68	11	L.02	25			
Separator effluent-2	210	220		540	140	78	16	.15	25		10.1	
Separator effluent-3	150	160		470	140	42	18	.05	23		9.9	
Final effluent-1	L5			64	16	11	1.4	L.02	.3			
Final effluent-2	L5		L5	49	24	2	2.0	L.02	.6		7.7	
Final effluent-3	L3		L3	41	31	7	2.0	L.02	L.1		7.5	
Refinery Q												
Intake-1	L2			4	8	3	L1.0	L.02	.4	5	7.1	
Intake-2	L2			4	11	2	L1.0	L.02	.3	9	7.4	
Intake-3	L3			24	9	L1	L1.0	L.02	.3	13	7.5	
Separator effluent-1	80		50	370	91	28	45	L.02	9.3	62	9.2	
Separator effluent-2	40		70	330	84	10	48	L.02	5.6		9.3	
Separator effluent-3	66		64	260	65	12	39	L.02	2.4	38	9.8	
Final effluent-1	28			260	59	38	53	L.02	.7	45	8.8	.2783
Final effluent-2	20			250	78	22	49	L.02	.6	45	8.3	.3086
Final effluent-3	30			230	60	26	42	L.02	.5	37	8.7	.3186

TABLE B-2

ANALYTICAL RESULTS FOR PRIORITY POLLUTANTS FOR THE RSKERL AND B&R SAMPLING PROGRAM VOLATILE ORGANICS (CONCENTRATIONS, ug/l)

Refinery A[a]

Compound	Intake Water	Separator Effluent	Final Effluent
4 Benzene	ND	G(100)	ND
23 Chloroform	70[b]	D(L 5)[b]	D (L 5)[b]
29 1,2-trans-Dichloroethylene	ND	20	ND
38 Ethylbenzene	ND	G(100)	ND
44 Methylene chloride	G (100)[b]	G(100)[b]	G(100)[b]
85 Tetrachloroethylene	ND	G(50)	D(L 10)
86 Toluene	ND	G(100)	ND

Refinery B[c]

	Intake Water	DAF Effluent	Final Effluent
4 Benzene	ND[b]	ND[b]	D(L 10)[b]
23 Chloroform	D(L 10)[d]	11[d]	D(L 10)[d]
44 Methylene chloride	22[d]	30[b]	ND[b]

Refinery C[e]

	Intake Water	Separator Effluent	Treated Effluent	Final Effluent
4 Benzene	ND	417[b]	ND	ND
10 1,2-Dichloroethane	ND	16	ND	ND
23 Chloroform	D(L 1)[b]	ND	ND	ND
38 Ethylbenzene	ND	38	ND	ND
44 Methylene chloride	85[b]	3[d]	7[d]	20[d]

Refinery D[a]

	Intake Water	Separator Effluent	Final Effluent
4 Benzene	ND	G(100)	ND
38 Ethylbenzene	ND	G(100)	ND
86 Toluene	ND	G(100)	ND

Refinery E[a]

	Intake Water	DAF Effluent	Final Effluent
4 Benzene	ND	G(100)	ND
38 Ethylbenzene	ND	G(100)	ND
44 Methylene chloride	50[d]	10[d]	10[d]
85 Tetrachloroethylene	50	ND	ND
86 Toluene	ND	G(100)	ND
87 Trichloroethylene	20	ND	ND

Refinery F[a]

	Intake Water	Cooling Tower Blowdown	Final Effluent
6 Carbon tetrachloride	G(50)	ND	ND
11 1,1,1-Trichloroethane	G(50)	ND	ND
44 Methylene chloride	D(L 10)[d]	70[b]	D(L 10)[d]

Refinery G[e]

	Intake Water	Separator Effluent	DAF Effluent	Final Effluent
4 Benzene	D(L 1)	409	2,005	D(L 1)
44 Methylene chloride	22[d]	293[b]	563[b]	12[d]
86 Toluene	D(L 1)	96	76,405	D(L 1)

Refinery H[c]

	Intake Water	Separator Effluent	Final Effluent
4 Benzene	ND[b]	ND[b]	12[b]
23 Chloroform	D(L 10)[d]	55[b]	66[b]
44 Methylene chloride	ND	ND	70[b]
86 Toluene	ND	ND	D(L 10)

Refinery I[e]

		Intake Water[f]	Separator Effluent	Final Effluent
4	Benzene	D(L 1)/D(L 1)[b]	2434[b]	2[b]
23	Chloroform	8/d(L 1)[b]	ND	ND
38	Ethylbenzene	ND/ND	812	ND
44	Methylene chloride	12/7[d]	19[d]	74[b]
86	Toluene	ND/ND	11767[b]	D(L 1)[b]

Refinery K[c]

		Intake Water	Separator Effluent	Final Effluent
4	Benzene	ND[b]	20[b]	ND[b]
10	1,2-Cichloroethane	ND	ND[b]	D(L 10)
15	1,1,2,2-Tetrachloroethane	ND	ND[b]	D(L 10)
23	Chloroform	D(L 10)[d]	100	D(L 10)[d]
30	1,2-trans-Dichloroethylene	ND	ND[b]	D(L 10)
38	Ethylbenzene	ND	ND[b]	D(L 10)
44	Methylene chloride	ND[b]	1100	ND[b]
85	Tetrachloroethylene	ND	ND[b]	D(L 10)
86	Toluene	ND	D(L 10)[b]	ND

Refinery L[a]

		Intake Water	Separator 1 Effluent	Separator 2 Effluent	Final Effluent
4	Benzene	ND	G(100)	G(100)	ND
23	Chloroform	ND	10	10	ND
38	Ethylbenzene	ND	G(100)	G(100)	ND
44	Methylene chloride	40[b]	G(100)[b]	50[b]	60[b]
86	Toluene	ND	G(100)	G(100)	ND

Refinery M[c]

		Intake Water	DAF Effluent	Final Effluent
[illegible]	Benzene	14[b]	12[d]	11[d]
6	Carbon tetrachloride	ND	D(L 10)	D(L 10)
23	Chloroform	44[b]	55[d]	D(L 10)[d]
44	Methylene chloride	91	180[d]	D(L 10)[d]
86	Toluene	D(L 10)	D(L 10)	D(L 10)

Refinery N[a]

		Intake Water	Chem.Plant Effluent	Separator Effluent	Final Effluent
4	Benzene	ND	90	G(100)	6[d]
23	Chloroform	ND	10	15	ND
38	Ethylbenzene	ND	20	G(100)	ND
44	Methylene chloride	G(100)[b]	G(100)[b]	G(100)[b]	G(100)[b]
86	Toluene	ND	G(100)	G(100)[b]	35

Refinery O[c]

		Intake Water	DAF Effluent	Final Effluent
4	Benzene	ND	D(L 10)[b]	D(L 10)[d]
6	Carbon tetrachloride	D(L 10)	ND	D(L 10)[b]
23	Chloroform	55	13	32[d]
44	Methylene chloride	130	ND	44[d]
86	Toluene	D(L 10)	16	ND[b]

Refinery P[c]

		Intake Water	Separator Effluent	Final Effluent
4	Benzene	D(L 10)[b]	1,100[b]	D(L 10)[b]
6	Carbon tetrachloride	ND	ND	D(L 10)[b]
15	1,1,2,2-Tetrachloroethane	D(L 10)[d]	ND[b]	D(L 10)[b]
23	Chloroform	D(L 10)[d]	100	D(L 10)
30	1,2-trans-Dichloroethylene	11	ND	ND
38	Ethylbenzene	ND	28	ND
44	Methylene chloride	ND	1,600[b]	41
85	Tetrachloroethylene	D(L 10)	ND	ND
86	Toluene	D(L 10)	655	ND
87	Trichloroethylene	D(L 10)	ND	D(L 10)

TABLE B-2

		Refinery Q[e]		
		Intake Water	Separator Effluent	Final Effluent
4	Benzene	D(L 1)	894	ND
23	Chloroform	ND	6[b]	ND
44	Methylene chloride	6[d]	4[d]	3[d]
48	Dichlorobromomethane	ND	24	ND
86	Toluene	ND	167	ND

Notes:

Volatile organic compounds not listed for a refinery were not detected in samples taken at that refinery.

ND - Compound was not detected.

D(Lx) - Compound was detected at some concentration less than x, but the concentration could not be quantified.

G(x) - Compound was detected at a level greater than x.

a) Midwest Research Institute conducted the analyses for volatile organic compounds in samples from Refineries A, D, E, F, L, N. See Reference No. 149.

b) Compound was detected in sample blank.

c) NUS Corporation conducted the analyses for volatile organic compounds in samples from Refineries B, H, K, M, O, P.

d) Compound was detected at a greater level in sample blank than in sample.

e) Gulf South Research Institute conducted the analyses for volatile organic compounds in samples from Refineries C, G, I, Q. These data represent results from one-time grab samples collected during revisits to these refineries. Additional sampling was necessary because the initial volatile organic results had been considered invalid due to improper analytical techniques. Since the revisit to Refinery J was conducted by an EPA regional surveillance and analysis sampling team, the results are not presented in this table.

f) Concentrations presented are for unpreserved/preserved samples.

TABLE B-3

ANALYTICAL RESULTS FOR PRIORITY POLLUTANTS

FOR THE RSKERL AND B&R SAMPLING PROGRAM

SEMIVOLATILE ORGANICS (CONCENTRATIONS, ug/l)

Compound	Refinery A[a] Intake Water	Separator Effluent[b]	Final Effluent
Base - Neutral Extractables			
1 Acenaphthene	ND	37	ND
55 Naphthalene	ND	68	ND
77 Acenaphthylene	ND	4	ND
81 Phenanthrene/78 Anthracene[c]	D(L0.1)	5	ND
68 Di-n-butyl phthalate	0.2	1.3	0.7
70 Diethyl phthalate	ND	12	ND
Acid Extractables			
65 Phenol	ND	13	ND

	Refinery B[d] Intake Water	DAF Effluent	Final Effluent
Base-Neutral Extractables	ND	ND	ND
Acid Extractables			
22 Parachlorometa cresol	ND	ND	D (L 10)
34 2,4 - Dimethylphenol	ND	10,000	D (L 10)
58 4- Nitrophenol	ND	ND	D (L 10)
65 Phenol	ND	ND	D (L 10)

	Refinery C-1[e] Intake Water	Separator Effluent	Treated Effluent	Final Effluent
Base-Neutral Extractables				
55 Naphthalene	ND	950	ND	ND
81 Phenanthrene/78 Anthracene	ND	190	ND	ND
66 Bis(2-ethylhexyl) phthalate	150	290	900	310
Acid Extractables				
65 Phenol	ND	2200	ND	ND

	Refinery C-2[f] Final Effluent
Base-Neutral Extractables	ND
Acid Extractables	ND

	Refinery D[a] Intake Water	Separator Effluent[g]	Final Effluent
Base-Neutral Extractables			
39 Fluoranthene	ND	3	ND
55 Naphthalene	2	190	ND
73 Benzo (a) pyrene	ND	ND	3
76 Chrysene	ND	0.1	1.4
81 Phenanthrene/78 Anthracene[c]	D(L0.1)	140	ND
84 Pyrene	ND	11	7
Acid Extractables	ND	ND	ND

	Refinery E[a]			
	Intake Water	DAF Effluent[b]	Final Effluent	Final Effluent[h]
Base-Neutral Extractables				
1 Acenaphthene	1.8	150	ND	ND
25 1,2-Dichlorobenzene	D(L0.5)	ND	ND	ND
27 1,4-Dichlorobenzene	D(L0.5)	ND	ND	ND
39 Fluoranthene	D(L0.2)	ND	ND	ND
55 Naphthalene	ND	106	ND	ND
76 Chrysene	ND	0.3	D(L0.1)	ND
80 Fluorene	ND	110	ND	ND
81 Phenanthrene/78 Anthracene[c]	ND	50	ND	D(L0.1)
84 Pyrene	D(L0.1)	5	D(L0.5)	D(L0.5)
68 Di-n-butyl phthalate	0.4	ND	ND	ND
Acid Extractables				
34 2,4-Dimethylphenol	ND	G(100)	ND	ND
65 Phenol	ND	G(100)	ND	ND

	Refinery F[a]		
	Intake Water[i]	Cooling Tower Blowdown[b]	Final Effluent
Base-Neutral Extractables			
39 Fluoranthene	29	ND	ND
73 Benzo (a) pyrene	33	10	1.3
76 Chrysene	49	7	0.8
81 Phenanthrene/78 Anthracene[c]	160	2	ND
84 Pyrene	140	10	ND
Acid Extractables	ND	ND	ND

	Refinery G-1[e]			
	Intake Water	Separator Effluent	DAF Effluent	Final Effluent
Base-Neutral Extractables				
39 Fluoranthene/84 Pyrene	ND	40	ND	ND
55 Naphthalene	ND	1100	700	ND
76 Chrysene/72 Benzo (a) Anthracene	ND	40	ND	ND
81 Phenanthrene/78 Anthracene	ND	1100	600	ND
66 Bis (2-ethylhexyl)phthalate	1100	700	1100	850
Acid Extractables				
65 Phenol	10	4900	2400	ND

	Refinery G-2[f]
	Final Effluent
Base-Neutral Extractables	
70 Diethyl phthalate	1
Acid Extractables	ND

	Refinery H[d]		
	Intake Water	Separator Effluent	Final Effluent
Base-Neutral Extractables			
66 Bis(2-ethylhexyl)phthalate	ND	ND	D (L 10)
Acid Extractables			
31 2,4-Dichlorophenol	ND	ND	10
34 2,4-Dimethylphenol	ND	175	ND
65 Phenol	ND	440	ND

TABLE B-3

Refinery I-1[e]

	Intake Water	Separator Effluent	Final Effluent
Base-Neutral Extractables			
55 Naphthalene	ND	290	ND
66 Bis(2-ethylhexyl)phthalate	950	300	600
68 Di-n-butyl phthalate	30	ND	10
Acid Extractables			
65 Phenol	ND	390	ND

Refinery I-2[f]

	Final Effluent
Base-Neutral Extractable	ND
Acid Extractable	ND

Refinery J

	Intake Water	Separator 1 Effluent	Separator 2 Effluent	Separator 3 Effluent
Base-Neutral Extractables				
1 Acenaphthene	ND	ND	ND	ND
39 Fluoranthene/84 Pyrene	ND	30	ND	ND
55 Naphthalene	ND	ND	350	ND
76 Chrysene/72 Benzo (a) anthracene	ND	30	30	50
81 Phenanthrene/78 Anthracene	ND	30	90	ND
80 Fluorene	ND	ND	ND	ND
66 Bis(2-ethylhexyl)phthalate	110	180	300	50
70 Diethyl phthalate	ND	ND	ND	ND
71 Dimethyl phthalate	ND	ND	ND	ND
Acid Extractables				
34 2,4-Dimethylphenol	ND	ND	ND	ND
64 Pentachlorophenol	ND	ND	ND	ND
65 Phenol	ND	420	160	ND

Refinery J[a] (continued)

	Separator 4 Effluent	Separator 5 Effluent	Bio-Pond Influent	Final Effluent
Base-Neutral Extractables				
1 Acenaphthene	50	ND	ND	ND
39 Fluoranthene/84 Pyrene	20	ND	ND	ND
55 Naphthalene	ND	ND	ND	ND
76 Chrysene/72 Benzo(a)anthracene	40	ND	ND	ND
81 Phenanthrene/78 Anthracene	230	ND	ND	ND
80 Fluorene	80	ND	ND	ND
66 Bis(2-ethylhexyl)phthalate	600	ND	210	190
70 Diethyl phthalate	ND	ND	ND	30
71 Dimethyl phthalate	ND	ND	ND	3
Acid Extractables				
34 2,4-Dimethylphenol	650	ND	750	ND
64 Pentachlorophenol	850	ND	ND	ND
65 Phenol	16,000	ND	G(12,000)	ND

Refinery K[d]

	Intake Water	Separator Effluent	Final Effluent
Base-Neutral Extractables	ND	ND	ND
Acid Extractables			
24 2-Chlorophenol	ND	315	ND
34 2,4-Dimethylphenol	ND	1,150	ND
58 4-Nitrophenol	ND	5,800	ND
59 2,4-Dinitrophenol	ND	11,000	ND
65 Phenol	ND	105	ND

		Refinery L[a]			
		Intake Water	Separator 1[g] Effluent	Separator 2[g] Effluent	Final Effluent
Base-Neutral Extractables					
1	Acenaphthene	29	ND	3,000	6
39	Fluoranthene	0.2	ND	9	D(L0.1)
55	Naphthalene	1	500	280	0.1
76	Chrysene	ND	20	2	0.3
77	Acenaphthylene	0.2	ND	ND	ND
80	Fluorene	1	270	300	ND
81	Phenanthrene/78 Anthracene[c]	1	230	ND	1
84	Pyrene	0.3	ND	7	D(L0.1)
Acid Extractables					
34	2,4-Dimethylphenol	ND	G(100)	G(100)	ND
65	Phenol	ND	G(100)	G(100)	ND

		Refinery M[d]		
		Intake Water	DAF Effluent	Final Effluent
Base-Neutral Extractables		ND	ND	ND
Acid Extractables				
22	Parachlorometa cresol	ND	ND	10
34	2,4-Dimethylphenol	ND	18,300	ND
58	4-Nitrophenol	ND	1,400	ND
59	2,4-Dinitrophenol	ND	2,660	ND
65	Phenol	D(L 10)	33,500	D(L 10)

		Refinery N[a]			
		Intake Water	Chem. Plant Effluent	Separator[g] Effluent	Final Effluent
Base-Neutral Extractables					
1	Acenaphthene	ND	ND	522	ND
39	Fluoranthene	ND	ND	8	ND
55	Naphthalene	ND	27	302	ND
76	Chrysene	ND	D(L0.1)	6	ND
77	Acenaphthylene	ND	ND	87	ND
81	Phenanthrene/78 Anthracene[c]	ND	1	140	ND
84	Pyrene	ND	1	16	ND
Acid Extractables					
22	Parachlorometa cresol	ND	10	ND	ND
34	2,4-Dimethylphenol	ND	G(100)	71	ND
65	Phenol	ND	40	G(100)	ND

		Refinery O[d]		
		Intake Water	DAF Effluent	Final Effluent
Base-Neutral Extractables				
1	Acenaphthene	ND	390	ND
39	Fluoranthene	ND	ND	ND
54	Isophorone	ND	2,500	ND
55	Naphthalene	ND	3,750	ND
68	Di-n-butyl phthalate	ND	ND	ND
71	Dimethyl phthalate	ND	ND	ND
76	Chrysene	ND	ND	ND
77	Acenaphthylene	ND	530	ND
78	Anthracene	ND	1,750	ND
80	Fluorene	ND	495	ND
81	Phenanthrene	ND	1,750	ND
84	Pyrene	ND	ND	ND
Acid Extractables				
34	2,4-Dimethylphenol	ND	2,000	ND
65	Phenol	ND	1,900	ND

TABLE B-3

	Refinery P[d]		
	Intake Water	Separator Effluent	Final Effluent
Base-Neutral Extractables			
1 Acenaphthene	ND	315	ND
54 Isophorone	ND	3,550	ND
55 Naphthalene	ND	3,200	ND
77 Acenaphthylene	ND	665	ND
78 Anthracene	ND	660	ND
81 Phenanthrene	ND	660	ND
Acid Extractables			
57 2-Nitrophenol	D (L 10)	1,350	ND
58 4-Nitrophenol	D (L 10)	20	ND
59 2,4-Dinitrophenol	ND	110	ND
60 4,6-Dinitro-o-cresol	ND	60	ND

	Refinery Q-1[e]		
	Intake Water	Separtor Effluent	Final Effluent
Base-Neutral Extractables			
66 Bis(2-ethylhexyl)phthalate	1,100	320	2,000
68 Di-n-butyl phthalate	20	ND	ND
71 Dimethyl phthalate	20	ND	ND
Acid Extractables			
65 Phenol	10	60	ND

	Refinery Q-2[f]
	Final Effluent
Base-Neutral Extractables	
70 Diethyl phthalate	1
Acid Extractables	ND

NOTES:

Semivolatile organic compounds not listed for a refinery were not detected in samples taken at that refinery.

ND - Compound was not detected.

D(LX) - Compound was detected at some concentration less than X, but the concentration could not be quantified.

G(X) - Compound was detected at a level greater than X.

(a) Midwest Research Institute conducted the analyses for semivolatile organic compounds in samples from Refineries A,D,E,F,L,N. See Reference No. 149.

(b) Base-neutral extract was diluted 1:10 before analysis.

(c) Concentrations represent sums for these two compounds which elute simultaneously and have the same major ions for GC/MS.

(d) NUS Corporation conducted the analyses for semivolatile organic compounds in samples from Refineries B, H, K, M, O, P.

(e) Ryckman, Edgerley, Tomlinson & Associates and Gulf South Research Institute conducted the analyses for semivolatile organic compounds in samples from Refineries C,G,I,J,Q.

(f) Gulf South Research Institute conducted the analyses for semivolatile organic compounds in additional samples from Refineries C,G,I,Q. These data represent results from one-time grab samples collected during revisits to these refineries. Since the revisit to Refinery J was conducted by an EPA regional surveillance and analysis sampling team, the results are not presented in this table.

(g) Both acidic and base-neutral extracts were diluted 1:10 before analysis.

(h) This sample was stored for 6 weeks prior to extraction for base-neutral and acidic organic compounds.

(i) Base-neutral extract was diluted 1:5 before analysis.

TABLE B-4

ANALYTICAL RESULTS FOR PRIORITY POLLUTANTS FOR THE RSKERL AND B&R SAMPLING PROGRAM PESTICIDES (CONCENTRATIONS, ug/l)

Refinery A[a]

Compound		Intake Water	Separator Effluent	Final Effluent
109	PCB-1239	ND	0.9	ND

Refinery B[b]

		Intake Water	DAF Effluent	Final Effluent
94	4,4'-DDD	ND	D(L 5)	ND
97	Endosulfan sulfate	ND	D(L 5)	ND
100	Heptachlor	ND	D(L 5)	D(L 5)
103	b-BHC-Beta	ND	D(L 5)	D(L 5)
104	r-BHC-Gamma	ND	D(L 5)	ND
106	PCB-1242	ND	D(L 10)	D(L 10)
107	PCB-1254	ND	D(L 10)	D(L 10)
108	PCB-1221	ND	D(L 10)	D(L 10)
109	PCB-1232	ND	D(L 10)	D(L 10)
110	PCB-1248	ND	D(L 10)	D(L 10)
111	PCB-1260	ND	D(L 10)	D(L 10)
112	PCB-1016	ND	D(L 10)	D(L 10)

Refinery C[a]

	Intake Water	Separator Effluent	Treated Effluent	Final Effluent
Pesticides	ND	ND	ND	ND

Refinery D[a]

		Intake Water	Separator Effluent	Final Effluent
106	PCB-1242	ND	1.1	ND
108	PCB-1221	ND	ND	D(L 5)

Refinery E[a]

		Intake Water	DAF Effluent	Final Effluent
106	PCB-1242	ND	0.2	ND

Refinery F[a]

		Intake Water	Cooling Tower Blowdown	Final Effluent
91	Chlordane	2.8	ND	ND
103	b-BHC-Beta	ND	0.7	ND
108	PCB-1221	ND	0.1	ND

Refinery G[a]

		Intake Water	Separator Effluent	DAF Effluent	Final Effluent
95	a-Endosulfan-Alpha	ND	ND	0.1	ND
106	PCB-1242	ND	0.5	0.5	ND
109	PCB-1232	ND	ND	3.5	ND
112	PCB-1016	ND	1.8	7.9	ND

Refinery H[b]

		Intake Water	Separator Effluent	Final Effluent
89	Aldrin	ND	D(L 5)	ND
93	4,4 -DDE	ND	7	ND
105	g-BHC-Delta	ND	D(L 5)	ND
106	PCB-1242	ND	D(L 10)	D(L 10)
107	PCB-1254	ND	D(L 10)	D(L 10)
108	PCB-1221	ND	D(L 10)	D(L 10)
109	PCB-1232	ND	D(L 10)	D(L 10)
110	PCB-1248	ND	D(L 10)	D(L 10)
111	PCB-1260	ND	D(L 10)	D(L 10)
112	PCB-1016	ND	D(L 10)	D(L 10)

TABLE B-4

Refinery I[a]

Pesticides	Intake Water	Separator Effluent	Final Effluent
	ND	ND	ND

Refinery J[a]

		Intake Water	Separator 1 Effluent	Separator 2 Effluent	Separator 3 Effluent
106	PCB-1242	ND	ND	0.5	ND
109	PCB-1232	ND	ND	0.5	ND
112	PCB-1016	ND	ND	0.2	ND

Refinery J[a] (continued)

		Separator 4 Effluent	Separator 5 Effluent	Bio-Pond Influent	Final Effluent
106	PCB-1242	ND	ND	0.1	ND
109	PCB-1232	ND	ND	ND	ND
112	PCB-1016	ND	ND	ND	ND

Refinery K[b]

		Intake Water	Separator Effluent	Final Effluent
101	Heptachlor epoxide	ND	D(L 5)	ND
106	PCB-1242	ND	D(L 10)	D(L 10)
107	PCB-1254	ND	D(L 10)	D(L 10)
108	PCB-1221	ND	D(L 10)	D(L 10)
109	PCB-123^	ND	D(L 10)	D(L 10)
110	PCB-1248	ND	D(L 10)	D(L 10)
111	PCB-1260	ND	D(L 10)	D(L 10)
112	PCB-1016	ND	D(L 10)	D(L 10)

Refinery L[a]

		Intake Water	Separator 1 Effluent	Separator 2 Effluent	Final Effluent
106	PCB-1242	0.2	5.2	ND	ND

Refinery M[b]

		Intake Water	DAF Effluent	Final Effluent
106	PCB-1242	ND	D(L 10)	D(L 10)
107	PCB-1254	ND	D(L 10)	D(L 10)
108	PCB-1221	ND	D(L 10)	D(L 10)
109	PCB-1232	ND	D(L 10)	D(L 10)
110	PCB-1248	ND	D(L 10)	D(L 10)
111	PCB-1260	ND	D(L 10)	D(L 10)
112	PCB-1016	ND	D(L 10)	D(L 10)

Refinery N[a]

		Intake Water	Chemical Plant Effluent	Separator Effluent	Final Effluent
101	Heptachlor epoxide	ND	4.6	ND	ND
108	PCB-1221	ND	ND	0.1	ND
109	PCB-1232	ND	0.1	0.5	ND
112	PCB-1016	ND	1.3	1.9	ND

Refinery O[b]

		Intake Water	DAF Effluent	Final Effluent
102	a-BHC-Alpha	ND	D(L 10)	ND

Refinery P[b]

		Intake Water	Separator Effluent	Final Effluent
89	Aldrin	ND	12	ND
96	b-Endosulfan-Beta	ND	13	ND
100	Heptachlor	ND	D(L 5)	ND
103	b-BHC-Beta	ND	D(L 5)	ND
105	g-BHC-Delta	ND	12	ND

TABLE B-4

	Refinery Q[a]		
	Intake Water	Separator Effluent	Final Effluent
Pesticides	ND	ND	ND

Notes: Pesticide compounds not listed for a refinery were not detected in samples taken at that refinery.

ND-Compound was not detected.

D(Lx)-Compound was detected at some concentration less than x, but the concentration could not be quantified.

a) Ryckman, Edgerley, Tomlinson and Associates conducted the analyses for pesticide compounds in samples from Refineries A,C,D,E,F,G,I,J,L,N,Q. Since these results have not been verified by GC/MS, the reported identifications must be considered tentative.

b)NUS Corporation conducted the analyses for pesticide compounds in samples from Refineries B,H,K,M,O,P.

TABLE B-5

ANALYTICAL RESULTS FOR PRIORITY POLLUTANTS FOR THE RSKERL AND B&R SAMPLING PROGRAM CYANIDE, PHENOLICS, MERCURY (CONCENTRATIONS, mg/l)

Sample-Day[a]	Lab	Cyanide	Phenolics	Mercury
Refinery A				
Intake-1	2	L.01[b]	L.010	
Intake-1	1			.0001
Intake-2	2	L.01	L.010	
Intake-2	1			.0001
Intake-3	2	L.01	L.011	
Intake-3	1			.0001
Intake-composite	2			L.0005
Intake-composite	1			.0001
Separator effluent-1	2	.05	L.52	
Separator effluent-1	1			.0002
Separator effluent-2	2	.06	.14	
Separator effluent-2	1			.0002
Separator effluent-3	2	.04	.15	
Separator effluent-3	1			
Separator effluent-composite	2			L.0005
Separator effluent-composite	1			.0008
Final effluent-1	2	L.03	L.021	
Final effluent-1	1			.0002
Final effluent-2	2	L.03	.010	
Final effluent-2	1			.0002
Final effluent-3	2	L.03	L.011	
Final effluent-3	1			.0002
Final effluent-composite	2			L.0005
Final effluent-composite	1			.0003
Refinery B				
Intake-1	2	L.02	L.010	
Intake-2	2	L.02	L.005	
Intake-3	2	L.02	L.005	
Intake-composite	2			L.0005
DAF effluent-1	2	.04	32.	
DAF effluent-2	2	.05	34.	
DAF effluent-3	2	.04	22.	
DAF effluent-composite	2			L.0005
Final effluent-1	2	L.02	.064	
Final effluent-2	2	L.02	.048	
Final effluent-3	2	L.02	.045	
Final effluent-composite	2			L.0005

TABLE B-5

Sample-Day[a]	Lab	Cyanide	Phenolics	Mercury
Refinery C[c]				
Intake-1	1			.0014
Intake-1	3	L.01	.004	.0010
Intake-2	1			.0016
Intake-2	3	L.01	.006	.0060
Intake-3	1			.0013
Intake-3	3	L.01	.004	.0010
Intake-composite	1			.0013
Separator effluent-1	1			.0011
Separator effluent-1	3	1.1	12.	L.0010
Separator effluent-2	1			.0012
Separator effluent-2	3	.12	3.2	.0060
Separator effluent-3	1			.0015
Separator effluent-3	3	.07	1.6	.0020
Separator effluent-3	3	.07	1.4	.0050
Separator effluent-3	3			.0780
Separator effluent-composite	1			.0012
Treated effluent-1	1			.0008
Treated effluent-1	3	.12	L.001	.0020
Treated effluent-1	3			.0006
Treated effluent-2	1			.0010
Treated effluent-2	3	.17	.011	.0050
Treated effluent-2	3		.016	
Treated effluent-3	1			.0010
Treated effluent-3	3	.08	L.001	.0090
Treated effluent-3	3			.0060
Treated effluent-composite	1			.0012
Final effluent-1	1			.0011
Final effluent-1	3	.03	.002	.0010
Final effluent-2	1			.0014
Final effluent-2	3	.05	.006	.0010
Final effluent-2	3	.04		
Final effluent-3	1			.0013
Final effluent-3	3	.06	.002	.0060
Final effluent-composite	1			.0013
Intake-4	3	L.02		L.0001
Separator effluent-4	3	L.02		L.0004
Treated effluent-4	3	.05		L.0002
Final effluent-4	3	.07		.0005
Refinery D				
Intake-1	2	L.02		
Intake-1	1			.0001
Intake-2	2	L.02		
Intake-2	1			.0002

TABLE B-5

Sample-Day[a]	Lab	Cyanide	Phenolics	Mercury
Refinery D (Cont.)				
Intake-3	2	L.02	0.23	
Intake-3	1			.0001
Intake-composite	2			L.0005
Intake-composite	1			.0002
DAF effluent-1	2	.05	3.7	
DAF effluent-1	1			.0002
DAF effluent-2	2	.06	5.1	
DAF effluent-2	1			.0001
DAF effluent-3	2	.04	8.0	
DAF effluent-3	1			.0002
DAF effluent-composite	2			L.0005
DAF effluent-composite	1			L.0001
Final effluent-1	2	.03		
Final effluent-1	1			.0002
Final effluent-2	2	.03		
Final effluent-2	1			.0002
Final effluent-3	2	L.02		
Final effluent-3	1			.0002
Final effluent-composite	2			L.0005
Final effluent-composite	1			.0002
Refinery E				
Intake-1	2	.03	L.011	
Intake-1	1			L.0001
Intake-2	2	L.03	.015	
Intake-2	1			L.0001
Intake-3	2	L.03	L.010	
Intake-3	1			L.0001
Intake-composite	2			L.0005
Intake-composite	1			L.0001
DAF effluent-1	2	L.03	6.8	
DAF effluent-1	1			L.0001
DAF effluent-2	2	L.03	9.9	
DAF effluent-2	1			L.0001
DAF effluent-3	2	L.03	11.0	
DAF effluent-3	1			L.0001
DAF effluent-composite	2			L.0005
DAF effluent-composite	1			L.0001
Final efflnent-1	2	L.03	.013	
Final effluent-1	1			.0001
Final effluent-2	2	L.03	.011	
Final effluent-2	1			L.0001
Final effluent-3	2	L.03	L.010	
Final effluent-3	1			.0001
Final effluent-composite	2			L.0005
Final effluent-composite	1			.0001

TABLE B-5

Sample-Day[a]	Lab	Cyanide	Phenolics	Mercury
Refinery F				
Intake-1	2	L.03	.21	
Intake-1	1			.0002
Intake-2	2	L.03	.21	
Intake-2	1			.0007
Intake-3	2	L.03	.21	
Intake-3	1			.0009
Intake-composite	2			L.0005
Intake-composite	1			.0006
Cooling tower blowdown-1	2	.52	.037	
Cooling tower blowdown-1	1			.0004
Cooling tower blowdown-2	2	.83	.041	
Cooling tower blowdown-2	1			.0005
Cooling tower blowdown-3	2	.83	.057	
Cooling tower blowdown-3	1			.0007
Cooling tower blowdown-composite	2			L.0005
Cooling tower blowdown-composite	1			.0005
Final effluent-1	2	.06	.022	
Final effluent-1	1			.0003
Final effluent-2	2	.07	.024	
Final effluent-2	1			.0003
Final effluent-3	2	.08	.026	
Final effluent-3	1			.0003
Final effluent-composite	2			L.0005
Final effluent-composite	1			.0004
Refinery G[c]				
Intake-1	1			.0013
Intake-1	3	L.01	.010	.0005
Intake-2	1			.0021
Intake-2	3	L.01	L.001	.0004
Intake-3	1			.0023
Intake-3	3	L.01	.008	L.0005
Intake-composite	1			.0008
Separator effluent-1	1			.0017
Separator effluent-1	3	1.2	23.	L.0002
Separator effluent-1	3	1.2	24.	
Separator effluent-2	1			.0009
Separator effluent-2	3	1.2	25.	L.0002
Separator effluent-3	1			.0018
Separator effluent-3	3	1.5	23.	.0002
Separator effluent-composite	1			.0003
DAF effluent-1	1			.0011
DAF effluent-1	3	1.9	22.	L.0002
DAF effluent-2	1			.0011
DAF effluent-2	3	2.0	26.	.0005

TABLE B-5

Sample-Day[a]	Lab	Cyanide	Phenolics	Mercury
Refinery G (Cont.)				
DAF effluent-3	1			.0010
DAF effluent-3	3	3.0	22.	.0010
DAF effluent-composite	1			.0003
Final effluent-1	1			.0008
Final effluent-1	3	.09	.047	.0010
Final effluent-1	3			.0007
Final effluent-2	1			.0018
Final effluent-2	3	.07	.020	L.0002
Final effluent-2	3	.09		
Final effluent-3	1			.0008
Final effluent-3	3	.30	.032	.0005
Final effluent-composite	1			.0004
Intake-4	3	L.02		
Separator effluent-4	3	.60		
DAF effluent-4	3	.13		
Final effluent-4	3	.17		
Refinery H				
Intake-1	2	L.02	.011	
Intake-2	2	L.02	L.005	
Intake-3	2	L.02	L.005	
Intake-composite	2			L.0005
Separator effluent-1	2	.16	2.3	
Separator effluent-2	2	.07	2.2	
Separator effluent-3	2	.08	1.9	
Separator effluent-composite	2			L.0005
Final effluent-1	2	.02	L.010	
Final effluent-2	2	.01	.010	
Final effluent-3	2	.02	.012	
Final effluent-composite	2			L.0005
Refinery I				
Intake-1	1			.0013
Intake-1	3	L.005	L.001	.0007
Intake-2	1			.0011
Intake-2	3	L.005	L.001	.0005
Intake-3	1			.0014
Intake-3	3	L.005	.004	.0007
Separator effluent-1	1			.0012
Separator effluent-1	3	.010	6.0	L.0002
Separator effluent-1	3		5.6	L.0002
Separator effluent-2	1			.0028
Separator effluent-2	3	.015	4.4	.0008
Separator effluent-3	1			.0011
Separator effluent-3	3	L.005	5.0	.0008

TABLE. B-5

Sample-Day[a]	Lab	Cyanide	Phenolics	Mercury
Refinery I (Cont.)				
Separator effluent-3	3		5.2	
Final effluent-1	1			.0042
Final effluent-1	3	L.005	.018	L.0002
Final effluent-1	3	L.005		
Final effluent-2	1			.0012
Final effluent-2	3	L.005	.014	L.0002
Final effluent-2	3	L.005		
Final effluent-3	3	L.005	.012	.0010
Refinery J				
Intake-1	1			.0007
Intake-1	3	.01	.017	.0001
Intake-1	3			.0004
Intake-2	1			.0009
Intake-2	3	.01	.024	.0002
Intake-3	1			.0019
Intake-3	3	L.01	.002	.0020
Intake-3	3			.0070
Intake-3	3			.0070
Intake-composite	1			.0005
Separator-1 effluent-1	1			.0001
Separator-1 effluent-1	3	.01	1.0	.0030
Separator-1 effluent-2	1			.0012
Separator-1 effluent-2	3	.01	1.0	L.0001
Separator-1 effluent-2	3	.01		
Separator-1 effluent-3	1			.0012
Separator-1 effluent-3	3	.01	.2	.0010
Separator-1 effluent-composite	1			.0005
Separator-2 effluent-1	1			.0028
Separator-2 effluent-1	3	.01	1.0	.0001
Separator-2 effluent-1	3		1.0	
Separator-2 effluent-2	1			.0016
Separator-2 effluent-2	3	.01	2.0	.0050
Separator-2 effluent-3	1			.0003
Separator-2 effluent-3	3	.01	2.5	L.0010
Separator-2 effluent-composite	1			.0006
Separator-3 effluent-1	1			.0002
Separator-3 effluent-1	3	.01	.690	L.0001
Separator-3 effluent-1	3		.5	
Separator-3 effluent-2	1			.0006
Separator-3 effluent-2	3	.01	1.3	.0010
Separator-3 effluent-3	1			.0009
Separator-3 effluent-3	3	.01	.270	.0006
Separator-3 effluent-composite	1			.0010

TABLE B-5

Sample-Day[a]	Lab	Cyanide	Phenolics	Mercury
Refinery J (Cont.)				
Separator-4 effluent-1	1			.0002
Separator-4 effluent-1	3	.06	9.5	.0002
Separator-4 effluent-2	1			.0013
Separator-4 effluent-2	3	.05	2.0	.0050
Separator-4 effluent-2	3		2.0	.0070
Separator-4 effluent-3	1			.0016
Separator-4 effluent-3	3	.06	1.5	.0020
Separator-4 effluent-3	3		1.5	
Separator-4 effluent-composite	1			.0004
Separator-5 effluent-1	1			.0003
Separator-5 effluent-1	3	.02	.294	L.0001
Separator-5 effluent-2	1			.0011
Separator-5 effluent-2	3	.02	.214	.0002
Separator-5 effluent-3	1			.0016
Separator-5 effluent-3	3	.02	.246	.0020
Separator-5 effluent-composite	1			.0005
Bio-pond influent-1	3	.22	120.	.0020
Bio-pond influend-2	3	.34	110.	.0060
Bio-pond influent-3	3	.26	83.	.0030
Final effluent-1	1			.0008
Final effluent-1	3	.07	.008	L.0001
Final effluent-2	1			.0013
Final effluent-2	3	.08	.024	.0060
Final effluent-3	1			.0009
Final effluent-3	3	.08	.002	.0040
Final effluent-3	3	.08		
Final effluent-composite	1			.0005
Refinery K				
Intake-1	2			
Intake-2	2	L.02	L.010	
Intake-3	2			
Intake-composite	2			L.0005
DAF effluent-1	2			
DAF effluent-2	2	L.02	.7	
DAF effluent-3	2			
DAF effluent-composite	2			L.0005
Final effluent-1	2			
Final effluent-2	2	L.02	.029	
Final effluent-3	2			
Final effluent-composite	2			L.0005

Sample-Day[a]	Lab	Cyanide	Phenolics	Mercury
Refinery L				
Intake-1	2	L.06	L.010	
Intake-1	1			L.0001
Intake-2	2	L.06	L.010	
Intake-2	1			.0002
Intake-3	2	L.06	L.010	
Intake-3	1			.0002
Intake-composite	2			
Intake-composite	1			.0002
Separator-1 effluent-1	2	.19	51.	
Separator-1 effluent-1	1			.0014
Separator-1 effluent-2	2	.36	52.	
Separator-1 effluent-2	1			.0014
Separator-1 effluent-3	2	.58	61.	
Separator-1 effluent-3	1			.0008
Separator-1 effluent-composite	2			
Separator-1 effluent-composite	1			.0015
Separator-2 effluent-1	2	.16		
Separator-2 effluent-1	1			.0006
Separator-2 effluent-2	2	.21	22.	
Separator-2 effluent-2	1			.0004
Separator-2 effluent-3	2	.08	L2.6	
Separator-2 effluent-3	1			.0004
Separator-2 effluent-composite	2			
Separator-2 effluent-composite	1			.0005
Final effluent-1	2	.08	L.010	
Final effluent-1	1			.0003
Final effluent-2	2	.08	.010	
Final effluent-2	1			.0003
Final effluent-3	2	.08	L.010	
Final effluent-3	1			.0003
Final effluent-composite	2			
Final effluent-composite	1			.0003
Refinery M				
Intake-1	2	L.02	L.010	
Intake-2	2	L.02	L.010	
Intake-3	2	L.02	L.010	
Intake-composite	2			
DAF effluent-1	2	.01	4.7	
DAF effluent-2	2	.02	4.2	
DAF effluent-3	2	.03	4.3	
DAF effluent-composite	2			
Final effluent-1	2	L.02	L.010	
Final effluent-2	2	L.02	L.010	
Final effluent-3	2	L.02	L.010	
Final effluent-composite	2			

TABLE B-5

Sample-Day[a]	Lab	Cyanide	Phenolics	Mercury
Refinery N				
Intake-1	2	L.06	L.010	
Intake-1	1			.0002
Intake-2	2	L.03	L.011	
Intake-2	1			.0001
Intake-3	2	L.06	L.010	
Intake-3	1			.0002
Intake-composite	2			L.0005
Intake-composite	1			.0002
Separator effluent-1	2	L.06	6.2	
Separator effluent-1	1			.0004
Separator effluent-2	2	.04	6.5	
Separator effluent-2	1			.0006
Separator effluent-3	2	L.06	4.7	
Separator effluent-3	1			.0004
Separator effluent-composite	2			L.0005
Separator effluent-composite	1			.0005
Chem plant effluent-1	2	L.06	L.260	
Chem plant effluent-1	1			L.0001
Chem plant effluent-2	2	L.03	.073	
Chem plant effluent-2	1			.0004
Chem plant effluent-3	2	L.06	.074	
Chem plant effluent-3	1			.0002
Chem plant effluent-composite	2			L.0005
Chem plant effluent-composite	1			.0002
Final effluent-1	2	L.06	L.015	
Final effluent-1	1			.0004
Final effluent-2	2	L.03	L.011	
Final effluent-2	1			.0002
Final effluent-3	2	L.06		
Final effluent-3	1			.0001
Final effluent-composite	2			L.0005
Final effluent-composite	1			.0001
Refinery O				
Intake-1	2	L.02	L.010	
Intake-2	2	L.02	L.005	
Intake-3	2	L.02	L.005	
Intake-composite	2			L.0005
DAF effluent-1	2	.21	11.	
DAF effluent-2	2	.16	10.	
DAF effluent-3	2	.13	11.	
DAF effluent-composite	2			L.0005
Final effluent-1	2	L.03	.052	
Final effluent-2	2	L.03	.049	
Final effluent-3	2	L.03	.036	
Final effluent-composite	2			L.0005

TABLE B-5

Sample-Day[a]	Lab	Cyanide	Phenolics	Mercury
Refinery F				
Intake-1	2	L.03	L.010	
Intake-2	2	L.02	L.005	
Intake-3	2	L.02	L.005	
Intake-composite	2			L.0005
Separator effluent-1	2	.09	106.	
Separator effluent-2	2	.06		
Separator effluent-3	2	.04	29.	
Separator effluent-composite.	2			L.0005
Final effluent-1	2	L.03	.012	
Final effluent-2	2	L.03	.011	
Final effluent-3	2	L.03	.010	
Final effluent-composite	2			L.0005
Refinery Q[c]				
Intake-1	1			.0021
Intake-1	3	L.01	L.001	
Intake-2	1			.0012
Intake-2	3	.02	.004	.0010
Intake-3	1			.0034
Intake-3	3	L.01	.010	.0060
Separator effluent-1	1			.0002
Separator effluent-1	3	L.01	.102	.0060
Separator effluent-1	3		.113	
Separator effluent-2	1			.0003
Separator effluent-2	3	L.01	.116	L.0002
Separator effluent-3	1			.0003
Separator effluent-3	3	.03	.118	L.0002
Final effluent-1	1			.0003
Final effluent-1	3	L.01	.016	.0060
Final effluent-1	3	L.01		.0120
Final effluent-1	3			.0002
Final effluent-2	1			.0003
Final effluent-2	3	.32	.018	.0020
Final effluent-2	3	.32	.018	L.0002
Final effluent-3	1			.0008
Final effluent-3	3	.01	.014	L.0002
Intake-4	3	L.02		L.0001
Separator effluent-4	3	L.02		L.0002
Final effluent-4	3	L.02		L.0001

Notes: (a) If a value is not listed for a particular sample location and time, then the indicated laboratory did not test that sample for the specified pollutant.
(b) L = less than.
(c) Grab samples collected during revisits to Refineries C, G, Q are indicated as Day 4.

Labs: 1 - EPA Region V Laboratory.
2 - Robert S. Kerr Environmental Research Laboratory, EPA
3 - Ryckman, Edgerley, Tomlinson and Associates.

TABLE B-6

ANALYTICAL RESULTS FOR PRIORITY POLLUTANTS FOR THE RSKERL AND B&R SAMPLING PROGRAM METALS (CONCENTRATIONS, ug/l)

Sample-Day[a]	Lab	Concentration (ug/l)											
		Ag	Be	Cd	Cr	Cu	Ni	Pb	Zn	As	Sb	Se	Tl
Refinery A													
I-1	1	L25	L2	L20	L24	L4	L50	L60	31				
I-2	1	L25	L2	L20	L24	L4	L50	L60	45				
I-3	1	L25	L2	L20	L24	L4	L50	L60	68				
I-Composite	1	L25	L2	L20	L24	L4	L50	L60	43				
I-Composite	2	L5	L3	L1	L5	L5	L15	L15	L10	L10	L25	L10	L25
SE-1	1	L25	L2	L20	L24	26	L50	147	253				
SE-2	1	L25	L2	L20	L24	23	L50	109	239				
SE-3	1	L25	L2	L20	1220	39	L50	224	329				
SE-C	1	L25	L2	L20	30	23	L50	114	272				
SE-C	2	L5	L3	L1	32	17	23	64	220	L2	L25	L10	L15
FE-1	1	L25	L2	L20	L24	L4	L50	L60	64				
FE-2	1	L25	L2	L20	L24	L4	L50	L60	65				
FE-3	1	L25	L2	L20	L24	6	L50	L60	77				
FE-C	1	L25	L2	L20	L24	5	L50	L60	51				
FE-C	2	L5	L3	L1	5	L5	L15	L15	30	L10	L25	L10	L15
Refinery B													
I-1	1	L1	L1	L2	30	30	6	60	L60				
I-2	1	L1	L1	L2	30	20	6	60	L60				
I-3	1	2	L1	7	50	40	20	50	100				
I-C	1	2	L1	L2	60	30	20	70	100				
I-C	2	L5	L3	L1	L5	L5	L15	L15	15	L20	L25	L20	L15
DAF E-1	1	L1	L1	L2	50	L6	L5	L20	L60				
DAF E-2	1	L1	L1	L2	50	9	L5	L20	L60				
DAF E-3	1	L1	L1	3	60	10	L5	L20	L60				
DAF E-C	1	L1	L1	L2	60	10	L5	L20	L60				
DAF E-C	2	L5	L3	L1	L5	7	L15	L15	30	L20	L25	L20	L15
FE-1	1	L1	L1	8	70	L6	L5	L20	L60				
FE-2	1	L1	L1	L2	70	L6	L5	L20	L60				
FE-3	1	L1	L1	L2	40	L6	L5	L20	L50				
FE-C	1	L1	L1	L2	50	L6	L5	L20	L60				
FE-C	2	L5	L3	L1	L5	L5	L15	L15	25	L20	L25	L20	L15
Refinery C-1													
I-1	1	L25	L2	L20	L24	12	L50	L60	79				
I-1	3						L2	L1				4	L1
I-2	1	L25	L2	L20	L24	9	L50	L60	44				
I-2	3						L2	L1				13	3
I-3	1	L25	L2	L20	L24	11	L50	L60	109				
I-3	3						L2	L1				4	L1
I-C	1	L25	L2	L20	L24	21	L50	119	1450				
I-C	3	L1	L1	L1	2	2	1	1	20	4	1	5	L2
SE-1	1	L25	L2	L20	575	231	L50	71	607				
SE-1	3				770				630			11	L1
SE-2	1	L25	L2	L20	518	151	L50	L60	517				
SE-2	3				820				670			8	L1
SE-3	1	L25	L2	L20	669	140	L50	64	614				
SE-3	3				940				550			9	L1
SE-C	1	L25	L2	L20	574	182	L50	227	3420				
SE-C	3	L1	L1	L1	880	190	L1	12	690	8	L1	15	
TE-1	1	L25	L2	L20	133	27	L50	L60	527				
TE-1	3			13	940	100	9		930			10	L1
TE-2	1	L25	L2	L20	L28	26	L50	66	489				
TE-2	3			9	470	190	6		440			L6	L1
TE-3	1	L25	L2	L20	770	51	L50	L60	881				
TE-3	3			15	1100	260	44		930			8	L1
TE-C	1	L25	L2	L20	342	59	L50	331	4780				
TE-C	3	L1	L1	16	490	230	18	17	780	6	1	15	
FE-1	1	L25	L2	L20	112	19	L50	L60	478				
FE-1	3						7	26	590			13	3
FE-2	1	L25	L2	L20	118	50	L50	113	565				
FE-2	3						7	58	620			10	7
FE-3	1	L25	L2	L20	142	24	L50	L60	526				
FE-3	3						7	26	590			19	L1
FE-C	1	L25	L2	L20	120	27	L50	112	1080				
FE-C	3	L1	L1	L1	3	10	15	50	700	5	3	19	L2
Refinery C-2[b]													
I	3								L1				L1
SE	3								679				L1
TE	3								519				L1
FE	3								543				L1

TABLE B-6

Sample-Day[a]	Lab	Concentration (ug/l) Ag	Be	Cd	Cr	Cu	Ni	Pb	Zn	As	Sb	Se	Tl
Refinery D													
I-1	1	L250	L20	L200	L240	L40	L500	L600	L250				
I-2	1	L250	L20	L200	L240	L40	L500	L600	L250				
I-3	1	L250	L20	L200	L240	L40	L500	L600	L250				
I-C	1	L250	L20	L200	L240	L40	L500	L600	L250				
I-C	2	L5	L3	L1	L14	L5	L15	L15	33	L10	L25	L10	L15
DAF E-1	1	L250	L20	L200	1020	L40	L500	L600	410				
DAF E-2	1	L25	L2	L20	681	15	L50	L60	242				
DAF E-3	1	L25	L2	L20	479	6	L50	L60	181				
DAF E-C	1	L25	L2	L20	719	7	L50	L60	262				
DAF E-C	2	L5	L3	L1	730	L5	L15	L15	280	L10	L25	L10	L15
FE-1	1	L25	L2	L20	1230	L4	L50	L60	515				
FE-2	1	L25	L2	L20	1160	L4	L50	L60	480				
FE-3	1	L25	L2	L20	875	L4	L50	L60	338				
FE-C	1	L25	L2	L20	1080	L4	L50	L60	430				
FE-C	2	L5	L3	L1	1000	L5	L15	L15	400	L10	L25	L10	L15
Refinery E													
I-1	1	L25	L2	L20	25	5	L50	L60	141				
I-2	1	L25	L2	L20	58	8	L50	L60	102				
I-3	1	L25	L2	L20	35	15	L50	L60	130				
I-C	1	L25	L2	L20	42	10	L50	L60	127				
I-C	2	L5	L3	2	35	8	51	23	110	L10	L25	L10	L15
DAF E-1	1	L25	L2	L20	104	L4	L50	L60	61				
DAF E-2	1	L25	L2	L20	86	L4	L50	L60	47				
DAF E-3	1	L25	L2	L20	89	L4	L50	L60	54				
DAF E-C	1	L25	L2	L20	89	L4	L50	L60	74				
DAF E-C	2	L5	L3	L1	76	L5	28	L15	50	L10	L25	L10	L15
FE-1	1	L25	L2	L20	42	L4	L50	L60	49				
FE-2	1	L25	L2	L20	52	L4	L50	L60	77				
FE-3	1	L25	L2	L20	44	L4	L50	L60	59				
FE-C	1	L25	L2	L20	42	L4	L50	L60	44				
FE-C	2	L5	L3	L1	36	L5	19	L15	30	L10	L25	12	L15
Refinery F													
I-1	1	L250	L20	L200	L240	50	L500	L600	L250				
I-2	1	L250	L20	L200	L240	190	L500	L600	L250				
I-3	1	L250	L2	L20	72	184	57	L60	127				
I-C	1	L250	L2	L20	58	151	62	L60	133				
I-C	2	L5	L3	L1	60	210	58	L15	120	27	L25	12	L15
CT B-1	1	L250	L2	L20	50	278	64	L60	229				
CT B-2	1	L250	L2	L20	60	350	101	L60	342				
CT B-3	1	L25	L2	L20	79	510	134	L60	452				
CT B-C	1	L25	L2	L20	57	405	88	L60	342				
CT B-C	2	L5	L3	L1	44	500	77	L15	330	41	L25	L10	L15
FE-1	1	L25	L2	L20	73	199	68	L60	125				
FE-2	1	L25	L2	L20	31	86	74	L60	151				
FE-3	1	L25	L2	L20	29	84	71	L60	112				
FE-C	1	L25	L2	L20	45	125	64	L60	132				
FE-C	2	L5	L3	L1	7	125	58	L15	100	31	L25	L10	L15
Refinery G-1													
I-1	1	L25	L2	L20	L24	L4	L50	78	52				
I-1	3								L1				L1
I-2	1	L25	L2	L20	L24	L4	52	102	72				
I-2	3								L1				L1
I-3	1	L25	L2	L20	L24	L4	L50	L60	28				
I-3	3								L1				L1
I-C	1	L25	L2	L20	L24	L4	L50	L60	30				
I-C	3	L1	L1	L1	1	7	L1	2	36	5	L1	3	L2
SE-1	1	L25	L2	L20	615	6	L50	181	125				
SE-1	3				820			420	60			9	L1
SE-2	1	L25	L2	L20	676	53	85	308	117				
SE-2	3				790			160	24			10	L1
SE-3	1	L25	L2	L20	73	L4	L50	L60	170				
SE-3	3				1200			430	110			6	L1
SE-C	1	L25	L2	L20	606	8	93	181	179				
SE-C	3	L1	L1	L1	1000	7	L1	278	66	5	L1	6	L2
DAF E-1	1	L25	L2	L20	526	L4	L50	159	93				
DAF E-1	3				710			270	44			5	L1
DAF E-2	1	L25	L2	L20	414	L4	L50	115	94				
DAF E-2	3				680			320	87			13	L1
DAF E-3	1	L25	L2	L20	73	L4	L50	L60	64				
DAF E-3	3				930			360	92			7	L1
DAF E-C	1	L25	L2	24	425	8	104	144	139				
DAF E-C	3	L1	L1	L1	800	3	1	260	53	L4	1	9	L2
FE-1	1	L25	L2	L20	89	L4	57	107	51				
FE-1	3											32	6
FE-2	1	L25	L2	L20	86	L4	63	90	46				
FE-2	3											9	12
FE-3	1	L25	L2	L20	73	L4	L50	L60	64				
FE-3	3											7	5
FE-C	1	L25	L2	L20	L24	L4	L50	L60	30				
FE-C	3	L1	L2	L1	1	7	L1	2	36	5	L1	3	L2

TABLE B-6

Sample-Day[a]	Lab	Concentration (ug/l) Ag	Be	Cd	Cr	Cu	Ni	Pb	Zn	As	Sb	Se	Tl
Refinery G-2[b]													
I	3												L1
SE	3												L1
DAF E	3												L1
FE	3												L1
Refinery H													
I-1	1	L1	L1	L2	20	L6	L5	L20	L60				
I-2	1	L1	L1	L2	10	9	L5	L20	L60				
I-3	1	L1	L1	8	20	10	L5	L20	L60				
I-C	1	L1	L1	L2	10	7	L5	L20	L60				
I-C	2	L5	L3	L1	L5	L5	L15	L15	15	L20	L25	L20	L15
SE-1	1	L1	L1	L2	10	30	L5	L20	L60				
SE-2	1	L1	L1	L2	7	20	L5	L20	L60				
SE-3	1	L1	L1	L2	20	30	L5	L20	70				
SE-C	1	L1	L1	L2	10	30	L5	L20	L60				
SE-C	2	L5	L3	L1	L5	7	L15	L15	30	L20	L25	L20	L15
FE-1	1	L1	L1	L2	20	10	L5	80	L60				
FE-2	1	L1	L1	L2	10	10	L5	30	60				
FE-3	1	L1	L1	20	10	9	L5	L20	L60				
FE-C	1	L1	L1	L2	10	7	L5	30	L60				
FE-C	2	L5	L3	L1	L5	L5	L15	L15	25	L20	L25	20	L15
Refinery I													
I-1	1	L25	L2	L20	L24	L4	L50	L60	69				
I-1	3												L1
I-2	1	L25	L2	L20	L24	6	L50	L60	52				
I-2	3												L1
I-3	1	L25	L2	L20	L24	20	L50	79	836				
I-3	3												L1
I-C	1	L25	L2	L20	L24	16	L50	78	536				
I-C	3	L1	L1	L1	1	10	L1	2	25	L4	L1	2	L1
SE-1	1	L25	L2	L20	98	157	L50	L60	172				
SE-1	3						7		110			L4	L1
SE-2	1	L25	L2	L20	91	167	L50	L60	237				
SE-2	3						L2		100			L4	L1
SE-3	1	L25	L2	L20	102	146	L50	90	1070				
SE-3	3						L2		100			7	L1
SE-C	1	L25	L2	L20	98	157	L50	168	1120				
SE-C	3	L1	L1	L1	3	6	5	2	100	5	L1	4	L2
FE-1	1	L25	L2	L20	L24	85	L50	L60	69				
FE-1	3											25	L1
FE-2	1	L25	L2	L20	L24	22	L50	L60	69				
FE-2	3											23	L1
FE-3	1												
FE-3	3												
FE-C	1	L25	L2	L20	L24	71	L50	211	2000				
FE-C	3	L1	L1	L1	1	3	L1	2	60	L4	L1	16	L2
Refinery J													
I-1	1	L25	L2	L20	L24	5	L50	L60	72				
I-1	3												L1
I-2	1	L25	L2	L20	L24	10	L50	L60	54				
I-2	3												L1
I-3	1	L25	L2	L20	L24	L4	L50	L60	62				
I-3	3												L1
I-C	1	L25	L2	L20	L24	4	L50	L60	62				
I-C	3	L1	L1	L1	1	1	1	2	54	3	L1	3	L2
S1 E-1	1	L25	L2	L20	36	L4	L50	L60	150				
S1 E-1	3								120			7	L1
S1 E-2	1	L25	L2	L20	620	1370	771	958	499				
S1 E-2	3				100				250			16	L1
S1 E-3	1	L25	L2	L20	50	33	L50	L60	432				
S1 E-3	3				16				420			L4	L1
S1 E-C	1	L25	L2	L20	52	25	L50	L60	257				
S1 E-C	3	L1	L1	L1	76	2	L1	4	320	3	L1	5	L2
S2 E-1	1	L25	L2	L20	440	L4	L50	190	316				
S2 E-1	3				450			190	290			16	3
S2 E-2	1	L25	L2	L20	1050	231	69	2080	1400				
S2 E-2	3				1100			2000	2100			12	L1
S2 E-3	1	L25	L2	L20	411	L4	L50	876	790				
S2 E-3	3				390			380	680			14	L1
S2 E-C	1	L25	L2	L20	584	55	61	810	658				
S2 E-C	3	L1	L1	L1	780	7	L1	870	740	5	L1	8	3
S3 E-1	1	L25	L2	L20	547	14	118	123	194				
S3 E-1	3				830				150			17	L1
S3 E-2	1	L25	L2	L20	1010	16	L50	L60	245				
S3 E-2	3				1200				210			13	L1
S3 E-3	1	L25	L2	L20	350	16	L50	L60	280				
S3 E-3	3				660				280			31	L1

TABLE B-6

Sample-Day[a]	Lab	Concentration (ug/l) Ag	Be	Cd	Cr	Cu	Ni	Pb	Zn	As	Sb	Se	Tl
Refinery J (Cont.)													
S3 E-C	1	L25	L2	L20	626	25	63	71	215				
S3 E-C	3	1	L1	L1	570	2	L1	2	260	3	L1	6	L2
S4 E-1	1	L25	L2	L20	835	38	L50	80	411				
S4 E-1	3				1500				340			25	L1
S4 E-2	1	L25	L2	L20	1210	21	L50	L60	261				
S4 E-2	3				1300				290			24	L1
S4 E-3	1	L25	L2	L20	1860	77	L50	L60	579				
S4 E-3	3				1700				620			4	L1
S4 E-C	1	L25	L2	L20	1300	42	L50	69	304				
S4 E-C	3	2	L1	L1	1900	10	L1	12	560	3	1	11	L2
S5 E-1	1	31	2	L20	1580	51	189	164	464				
S5 E-1	3			4	2200				600			7	L1
S5 E-2	1	L25	L2	L20	2790	47	L50	L60	609				
S5 E-2	3			5	4900				740			29	4
S5 E-3	1	L25	L2	L20	1500	51	L50	L60	417				
S5 E-3	3			9	1800				520			19	6
S5 E-C	1	L25	L2	L20	2010	45	79	101	491				
S5 E-C	3	L1	L1	7	3600	182	1	2	760	9	L1	23	L2
B-P I-1	1	L25	L2	L20	L24	41	L50	72	148				
B-P I-1	3				9							20	L1
B-P I-2	1	L25	L2	L20	L25	7	L50	L60	54				
B-P I-2	3				5							10	L1
B-P I-3	1	L25	L2	L20	L24	L4	L50	L60	65				
B-P I-3	3				6							18	L1
B-P I-C	1	L25	L2	L20	29	17	L50	L60	55				
B-P I-C	3	L1	L1	L1	22	2	L1	3		L2	L1	22	L2
FE-1	1	L25	L2	L20	96	9	53	82	130				
FE-1	3				150							20	L1
FE-2	1	L25	L2	L20	94	L4	L50	L60	51				
FE-2	3				27		7					27	L1
FE-3	1	L25	L2	L20	102	6	65	L60	46				
FE-3	3				27		6					16	L1
FE-C	1	L25	L2	L20	82	L4	L50	L60	62				
FE-C	3	L1	L1	L1	54	32	3	9	62	L4	L11	12	L2
Refinery K													
I-1	1	L1	L1	L2	20	10	L5	70	200				
I-2	1	L1	L1	L2	10	10	L5	40	70				
I-3	1	L1	L1	3	10	10	L5	80	60				
I-C	1	L1	L1	L2	20	10	L5	40	70				
I-C	2	L5	L3	L1	5	6	L15	L15	45	L20	L25	L20	L15
DAF E-1	1	L1	L1	L2	1000	200	9	50	1000				
DAF E-2	1	L1	L1	L2	2000	400	20	200	3000				
DAF E-3	1	L1	L1	L2	1000	200	L5	60	1000				
DAF E-C	1	L1	L1	L2	1000	300	20	100	2000				
DAF E-C	2	L5	L3	3	1600	280	28	70	1400	L20	L25	L20	L15
FE-1	1	L1	L1	L2	100	60	L5	L20	100				
FE-2	1	L1	L1	L2	60	10	L5	L20	70				
FE-3	1	L1	L1	L2	100	20	L5	L20	100				
FE-C	1	L1	L1	L2	100	30	L5	L20	1000				
FE-C	2	L5	L3	1	73	18	L15	L15	120	L20	L25	L20	L15
Refinery L													
I-1	1	L250	L20	L200	L240	L40	L500	L600	810				
I-2	1	L250	L20	L200	L240	L40	L500	700	L250				
I-3	1	L25	L2	L20	L24	22	L50	64	125				
I-C	1	L250	L20	L200	L240	L40	L500	L600	L250				
I-C	2	L5	L3	L1	30	20	21	40	120	L20	L25	L20	L15
S1 E-1	1	L250	L20	L200	1000	170	L500	L600	490				
S1 E-2	1	L250	L20	L200	L240	L40	L500	L600	290				
S1 E-3	1	L250	L20	L200	L240	100	L500	L600	290				
S1 E-C	1	L250	L20	L200	L240	100	L500	L600	360				
S1 E-C	2	L5	L3	L1	290	180	70	45	370	L20	L25	L20	L15
S2 E-1	1	L25	L2	L20	773	43	L50	L60	382				
S2 E-2	1	L25	L2	L20	831	54	L50	L60	304				
S2 E-3	1	L25	L2	L20	928	31	L50	L60	314				
S2 E-C	1	L25	L2	L20	802	42	L50	L60	325				
S2 E-C	2	L5	L3	L1	870	50	16	17	290	L20	L25	L20	L15
FE-1	1	L25	L2	L20	205	24	L50	L60	174				
FE-2	1	L25	L2	L20	119	19	L50	L60	157				
FE-3	1	L25	L2	L20	165	31	L50	L60	161				
FE-C	1	L25	L2	L20	144	24	L50	L60	174				
FE-C	2	L5	L3	L1	190	39	15	L15	140	L20	L25	L20	L15

TABLE B-6

Sample-Day [a]	Lab	Concentration (ug/l) Ag	Be	Cd	Cr	Cu	Ni	Pb	Zn	As	Sb	Se	Tl
Refinery M													
I-1	1	L1	L1	L2	30	300	10	200	200				
I-2	1	L1	L1	L2	10	100	L5	L20	90				
I-3	1	L1	L1	L2	20	100	L5	40	100				
I-C	1	L1	L1	L2	20	200	L5	60	100				
I-C	2	L5	L3	L1	L5	180	L15	25	75	L20	L25	L20	L15
DAF E-1	1	L1	2	L2	200	10	L5	L20	200				
DAF E-2	1	L1	2	L2	100	10	L5	L20	100				
DAF E-3	1	L1	2	L2	90	9	L5	L20	90				
DAF E-C	1	L1	2	L2	100	10	L5	L20	100				
DAF E-C	2	L5	L3	L1	73	6	L15	L15	140	L20	L25	L20	L15
FE-1	1	L1	2	3	90	10	L5	L20	90				
FE-2	1	L1	2	L2	100	10	L5	50	100				
FE-3	1	4	L1	L2	90	20	10	L20	100				
FE-C	1	4	L1	L2	100	20	20	30	200				
FE-C	2	L5	L3	L1	24	8	L15	L15	90	L20	L25	L20	L15
Refinery N													
I-1	1	L25	L2	L20	L24	L4	L50	L60	56				
I-2	1	L25	L2	L20	L24	L4	L50	L60	29				
I-3	1	L250	L20	L200	3000	L40	790	L600	L250				
I-C	1	L25	L2	L20	L24	L4	L50	L60	36				
I-C	2	L5	L3	L1	7	L5	L15	L15	19	L20	L25	L20	L15
SE-1	1	L250	L20	L200	1000	L40	L500	L600	480				
SE-2	1	L250	L20	L200	2000	L40	L500	L600	760				
SE-3	1	L25	L2	L20	980	7	L50	L60	573				
SE-C	1	L25	L2	L20	1280	14	L50	L60	603				
SE-C	2	L5	L3	L1	1400	61	16	18	570	L20	L25	L20	L15
CPE-1	1	L25	L2	L20	805	L4	L50	L60	6520				
CPE-2	1	L25	L2	L20	679	8	L50	L60	4110				
CPE-3	1	L25	L2	L20	499	7	L50	L60	4260				
CPE-C	1	L25	L2	L20	701	L4	L50	L60	5210				
CPE-C	2	L5	L3	L1	650	13	L15	L15	4800	L20	L25	L20	L15
FE-1	1	L25	L2	L20	L24	L4	L50	L60	L25				
FE-2	1	L25	L2	L20	159	L4	L50	L60	118				
FE-3	1	L25	L2	L20	131	L4	L50	L60	61				
FE-C	1	L25	L2	L20	137	L4	L50	L60	104				
FE-C	2	L5	L3	L1	120	11	L15	L15	35	L20	L25	L20	L15
Refinery O													
I-1	1	L1	L1	L2	L5	L6	L5	L20	L60				
I-2	1	L1	L1	L2	L5	L6	L5	L20	L60				
I-3	1	L1	L1	L2	L5	L6	L5	L20	L60				
I-C	1	L1	L1	L2	L5	L6	L5	L20	L60				
I-C	2	L5	L3	L1	8	L5	L15	L15	L10	L20	L25	L20	L15
DAF E-1	1	L1	L1	L2	200	30	L5	L20	L60				
DAF E-2	1	L1	L1	L2	300	10	L5	L20	L60				
DAF E-3	1	L1	L1	L2	300	8	L5	L20	100				
DAF E-C	1	L1	L1	L2	200	20	L5	L20	60				
DAF E-C	2	L5	L3	L1	240	30	L15	27	74	L20	L25	L20	L15
FE-1	1	L1	L1	L2	50	L6	L5	L20	L60				
FE-2	1	L1	L1	L2	50	L6	L5	L20	L60				
FE-3	1	L1	L1	L2	50	L6	L5	L20	L60				
FE-C	1	L1	L1	L2	50	L6	L5	L20	L60				
FE-C	2	L5	L3	L1	110	L5	L15	L15	L10	L20	L25	L20	L15
Refinery P													
I-1	1	L1	L1	L2	L5	L6	L5	L20	L60				
I-2	1	L1	L1	L2	L5	L6	L5	L20	L60				
I-3	1	L1	L1	L2	L5	L6	L5	L20	L60				
I-C	1	L1	L1	L2	L5	L6	L5	L20	L60				
I-C	2	L5	L3	L1	40	L5	L15	L15	61	L20	L25	L20	L15
SE-1	1	L1	L1	L2	900	L6	L5	L20	L60				
SE-2	1	L1	L1	L2	50	L6	L5	L20	L60				
SE-3	1	L1	L1	L2	700	L6	L5	L20	L60				
SE-C	1	L1	L1	L2	600	L6	L5	L20	L60				
SE-C	2	L5	L3	L1	72	L5	L15	L15	55	L20	360	L20	L15
FE-1	1	L1	L1	L2	L5	L6	L5	L20	L60				
FE-2	1	L1	L1	L2	L5	L6	L5	L20	L60				
FE-3	1	L1	L1	L2	L5	L6	L5	L20	L60				
FE-C	1	L1	L1	L2	L5	L6	L5	L20	L60				
FE-C	2	L5	L3	L1	40	L5	L15	L15	43	L20	370	L20	L15

TABLE B-6

Sample-Day[a]	Lab	Concentration (ug/l)											
		Ag	Be	Cd	Cr	Cu	Ni	Pb	Zn	As	Sb	Se	Tl
Refinery Q-1													
I-1	1	L25	L2	L20	L24	37	L50	L60	70				
I-1	3											L6	L1
I-2	1	L25	L2	L20	L24	37	L50	L60	62				
I-2	3											6	L1
I-3	1	L25	L2	L20	L24	20	L50	L60	329				
I-3	3											10	L1
I-C	1	L25	L2	L20	L24	53	L50	167	2820				
I-C	3	L1	L1	L1	1	120	L1	2	35	7	L1	6	L2
SE-1	1	L25	L2	L20	L24	7	L50	L60	274				
SE-1	3					60			330	480		9	L1
SE-2	1	L25	L2	L20	L24	L4	L50	L60	444				
SE-2	3					140			470	460		7	L1
SE-3	1	L25	L2	L20	L24	6	L50	L60	511				
SE-3	3					60			640	460		6	L1
SE-C	1	L25	L2	L20	L24	15	L50	101	1460				
SE-C	3	L1	L1	L1	1	210	L1	10	470	440	L1	10	L2
FE-1	1	L25	L2	L20	L24	11	L50	L60	245				
FE-1	3								380	790		11	L1
FE-2	1	L25	L2	L20	L24	20	L50	L60	329				
FE-2	3			L1					360	900		10	L1
FE-3	1	L25	L2	L20	L24	6	L50	L60	300				
FE-3	3			L1					350	680		22	L1
FE-C	1	L25	L2	L20	L24	23	L50	102	1270				
FE-C	3	L1	L1	5	2	180	L1	15	340	800	1	20	L2
Refinery Q-2[b]													
TE	3					240			L1	35			
SE	3					380			262	350			
FE	3					300			167	500			

Notes: a) If a value is not listed for a particular sample location and time, then the indicated laboratory did not test that sample for the specified pollutant.

b) These data represent results from one-time grab samples collected during revisits to Refineries C, G, Q.

L - Less than
I - Intake
SE - Separator effluent
DAF E - DAF effluent
TE - Treated effluent
FE - Final effluent
CT B - Cooling Tower blowdown
B-P I - Bio-pond influent
CPE - Chemical plant effluent

Labs: 1 - EPA Region V Laboratory
2 - Robert S. Kerr Environmental Research Laboratory, EPA
3 - Ryckman, Edgerley, Tomlinson and Associates

TABLE B-7

Analytical Results for Traditional Parameters in the Pretreatment Sampling Program - Week 1

Sampling Location	Day	pH	SS mg/l	Sulfide mg/l S	BOD_5 mg/l	COD mg/l	CN mg/l	Phenol mg/l	O&G mg/l	Cr^{+6} mg/l	NH_3-N mg/l N
1. Refinery No. 25 Effluent	1	8.9	19	< 0.1	310	690	3.0	123	41.4	0.26	39.1
	2	8.7	45	< 0.1	320	710	2.6	88	42.3	0.48	36.1
	3	8.68	25	< 0.1	355	700	3.0	99	61.8	0.22	36.4
2. POTW No. 1	1	7.50	316	0.25	212	505	0.1	1.7	54.1	< 0.02	22.6
a. Raw Influent	2	7.50	290	0.20	240	580	*	*	59.0	< 0.02	26.3
	3	7.30	524	0.40	235	580	0.02	0.113	22.4	< 0.02	23.2
b. Final Effluent	1	7.40	1	< 0.1	3	34	0.06	0.003	1.3	< 0.02	8.8
	2	7.55	2	< 0.1	4	30	0.07	0.011	1.0	< 0.02	12.0
	3	7.80	2	< 0.1	5	35	0.05	0.012	0.9	< 0.02	9.7
c. Primary Sludge	1	5.9	21,200	35.0	> 4,930	28,600	0.24	2.30	2,660	< 0.02	74.2
	2	8.5	39,160	110.0	8,920	39,700	*	*	5,260	< 0.02	51.7
	3	6.78	12,450	33.0	1,230	30,100	0.05	0.622	1,044	< 0.02	31.8
d. Secondary Sludge	1	7.3	1,948	0.25	745	2,070	0.15	0.074	29.5	< 0.02	10.4
	2	7.45	3,536	0.80	1,460	42,300	*	*	59.5	< 0.02	10.7
	3	7.60	3,000	0.50	5,680	15,800	0.17	0.169	42.0	< 0.02	6.1

NOTE: Day 1 - 8/16/78; Day 2 - 8/17/78; Day 3 - 8/18/78

* in trace, but below detection limit

All samples were analyzed by the Water Quality Labs associated with POTW No. 1.

TABLE B-8

ANALYTICAL RESULTS FOR PRIORITY POLLUTANTS FOR THE PRETREATMENT SAMPLING PROGRAM-WEEK 1, VOLATILE ORGANIC CONCENTRATIONS, ug/l

Pollutant	Pol No.	Day	Ref. No. x 25 Eff. to POTW	POTW x Inf.	Primary x Eff.	Secondary x Eff.	Final x Eff.	Primary xx Sludge	Secondary xx Sludge
Benzene	4	1	4,200	23	17	-	-	9	-
		2	5,800	81	64	-	-	13	-
		3	1,600	*	14	-	-	-	-
Chlorobenzene	7	1	-	-	-	-	-	-	-
		2	31	-	-	-	-	-	-
		3	-	-	-	-	-	-	-
1,1,1-trichloro-ethane	11	1	-	5	-	-	-	-	-
		2	-	22	16	-	-	-	-
		3	-	*	10	-	15	-	-
1,1-dichloro-ethane	13	1	-	-	-	-	-	16	-
		2	-	-	-	-	-	-	-
		3	-	-	-	-	-	-	-
Chloroform	23	1	-	-	-	-	-	-	-
		2	21	10	*	-	*	-	-
		3	17	*	*	*	*	-	-
1,2-trans-dichloroethylene	30	1	-	-	-	-	-	60	-
		2	-	-	-	-	-	-	-
		3	-	*	*	-	-	50	-
Ethylbenzene	38	1	9,000	25	38	*	-	50	-
		2	5,600	20	25	-	*	20	-
		3	4,000	*	*	-	-	-	-
Methylene chloride	44	1	-	*	*	*	*	30	10
		2	-	*	*	*	-	(11) *	120
		3	-	*	*	*	23	(11) *	18(15)
Tetrachloro-ethylene	85	1	*	88	43	*	*	-	-
		2	-	117	160	16	10	-	-
		3	18	19	24	*	23	-	-
Toluene	86	1	15,000	84	67	-	-	30	-
		2	9,900	103	110	-	-	30	-
		3	5,700	24	31	-	-	10	-
Trichloro-ethylene	87	1	-	38	21	*	*	150	-
		2	-	57	78	*	*	-	7
		3	-	27	36	*	*	20	-

NOTE: - Not detected.
* In traces, but below detection limit.
( ) Sample blank. No volatile organics detected in other sample blanks.
x Analysis performed by West Coast Technical Service.
xx Analysis performed by Pomeroy, Johnston and Bailey.
Of the 30 volatile organics, only 11 were detected.

TABLE B-9

ANALYTICAL RESULTS FOR PRIORITY POLLUTANTS FOR THE PRETREATMENT SAMPLING PROGRAM-WEEK 1, SEMIVOLATILE ORGANICS (CONCENTRATIONS, ug/l)

Pollutants	Poll No.	**	Day	Ref. No. 25 Eff. to POTW	POTW[x] Inf.	Primary[x] Eff.	Secondary[x] Eff.	Final[x] Eff.	Primary[xx] Sludge	Secondary[xx] Sludge
2,4-Dimethyl-phenol	34	AE	1	1,700	69	72	*	*	-	-
			2	-	-	-	*	-	-	-
			3	233	25	34	-	-	-	-
Pentachloro-phenol	64	AE	1	-	-	-	-	*	-	-
			2	-	-	-	*	*	-	-
			3	830	-	-	-	-	-	-
Phenol	65	AE	1	2,900	575	520	*	*	-	-
			2	-	700	700	*	*	355	405
			3	-	980	1,100	*	*	180	1,200
1,2 dichloro-benzene	25	BNE	1	-	*	-	*	*	13	20
			2	-	4	17	*	-	7	9
			3	-	15	11	*	*	10	-
1,3 dichloro-benzene	26	BNE	1	-	*	-	-	*	30	-
			2	-	19	17	*	-	15	5
			3	-	10	11	*	*	-	-
1,4 dichloro-benzene	27	BNE	1	-	28	23	*	*	30	-
			2	-	29	30	*	-	15	5
			3	-	24	30	10	*	9	-
Isophorene	54	BNE	1	-	-	-	-	-	-	-
			2	-	-	23	-	-	-	-
			3	-	-	-	-	*	-	-
Naphthalene	55	BNE	1	620	113	93	*	*	440	-
			2	-	121	156	*	-	30	-
			3	370	20	35	-	*	-	-
Nitrobenzene	56	BNE	1	-	-	-	-	-	5	-
			2	-	-	-	-	-	-	-
			3	-	-	-	-	-	-	-
Bis(2-ethyl-hexyl)phthalate	66	BNE	1	-	124	94	*	-	-	75
			2	-	112	56	*	*	130	180
			3	-	130	150	-	-	240	140
Butyl benzyl phthalate	67	BNE	1	16	55	59	-	-	170	-
			2	-	63	43	-	-	25	-
			3	-	39	68	*	*	14	-

TABLE B-9

ANALYTICAL RESULTS FOR PRIORITY POLLUTANTS FOR THE PRETREATMENT SAMPLING PROGRAM-WEEK I, SEMIVOLATILE ORGANICS (CONCENTRATIONS, ug/l)

Pollutants	Poll No.	**	Day	Ref.No.[x] 25 Eff.to POTW	POTW[x] Inf.	Primary[x] Eff.	Secondary[x] Eff.	Final[x] Eff.	Primary[xx] Sludge	Secondary[xx] Sludge
Di-n-butyl Phthalate	68	BNE	1	40	24	19	*	*	-	-
			2	*	28	21	*	-	-	-
			3	-	34	17	*	*	-	-
Di-n-octyl Phthalate	69	BNE	1	-	12	*	-	-	-	-
			2	-	-	*	-	-	-	-
			3	-	-	-	-	-	-	-
Diethyl Phthalate	70	BNE	1	-	-	27	-	*	190	5
			2	14	13	17	*	-	-	-
			3	-	*	*	15	*	-	11
Dimethyl Phthalate	71	BNE	1	-	-	*	-	*	9	-
			2	-	-	*	-	-	-	-
			3	-	-	-	*	*	-	-
Acenaphthylene	77	BNE	1	-	-	-	-	-	-	-
			2	-	-	-	-	-	-	-
			3	-	-	*	-	-	-	-
Anthracene[+]	78	BNE	1	60	*	*	-	-	-	-
			2	51	*	*	-	-	-	-
			3	30	*	*	-	*	-	-
Fluorene	80	BNE	1	-	-	-	-	*	-	-
			2	63	*	*	-	-	-	-
			3	32	*	-	-	-	-	-
Phenanthrene[+]	81	BNE	1	60	*	*	-	-	-	-
			2	51	*	*	-	-	-	-
			3	30	*	*	-	*	-	-
Pyrene	84	BNE	1	-	-	-	-	-	-	-
			2	21	-	-	-	-	-	-
			3	-	-	-	-	-	-	-

Of 59 semi-volatile organics, only 20 were detected.
* in traces, but below Detection Limit.
** AE - Acid extractable; BNE - Base/neutral extractables.
\+ Anthracene and Phenanthrene are unresolved.
\- Not detected.
x Samples were analyzed by West Coast Technical Services.
xx Samples were analyzed by Pomeroy, Johnston and Bailey.

TABLE B-10

ANALYTICAL RESULTS FOR PRIORITY POLLUTANTS FOR THE PRETREATMENT SAMPLING PROGRAM-WEEK 1, PESTICIDES(CONCENTRATIONS, ug/l)

Pollutant	Poll. No.	Day	Refinery[x] No.25 Eff.to POTW	POTW[x] Inf.	Primary[x] Eff.	Secondary[x] Eff.	Final[x] Eff.	Primary[xx] Sludge	Secondary[xx] Sludge
4,4'-DDE	93	1	-	-	-	-	-	-	-
		2	-	-	-	-	-	-	-
		3	-	0.68	0.39	-	-	-	-
Heptachlor	100	1	-	-	-	-	-	-	-
		2	-	-	-	-	-	-	-
		3	-	0.12	0.13	-	-	-	-
b-BHC-Beta	103	1	0.18	-	-	-	-	-	-
		2	-	-	-	-	-	-	-
		3	0.10	0.55	0.49	-	-	-	-
r-BHC-Gamma	104	1	-	-	-	-	1.1	-	-
		2	-	-	6.3	-	1.2	-	-
		3	-	0.14	0.13	-	-	-	-

NOTE: Of 25 pesticides only 4 were found; none of the four were confirmed by GCMS.

- Not detected.

x Samples were analyzed by West Coast Technical Service.

xx Samples were analyzed by Pomeroy, Johnston and Bailey.

TABLE B-11

Analytical Results for Priority Pollutants for the Pretreatment Sampling Program - Week 1, Metals (Concentrations, ug/l)

			POTW No. 1						
Pollutant	Poll. No.	Day	Influent x	Primary Effluent x	Secondary Effluent x	Final Effluent x	Primary Sludge xx	Secondary Sludge xx	Effluent to POTW from Refinery No. 25 x
Antimony	114	1	-	-	-	-	1250	830	-
		2	-	-	-	-	830	210	-
		3	-	-	-	-	60	23	-
Arsenic	115	1	27	-	-	-	86	73	30
		2	-	28	-	-	174	76	-
		3	26	-	-	-	66	60	-
Beryllium	117	1	-	-	-	-	12	6	-
		2	-	-	-	-	-	-	-
		3	-	-	-	-	4	10	-
Cadmium	118	1	61	37	-	-	1590	240	-
		2	29	20	-	-	610	320	-
		3	42	20	-	-	180	310	-
Chromium	119	1	335	197	39	18	17900	4080	1994
		2	357	188	33	16	17900	5560	1473
		3	241	140	31	15	2870	5140	1649
Copper	120	1	263	161	56	34	7800	2500	29
		2	248	132	16	-	11200	3300	26
		3	202	106	16	32	3300	3000	15
Lead	122	1	251	148	37	29	15700	1200	28
		2	218	105	-	-	9000	1500	26
		3	324	141	39	38	2800	1600	30
Mercury	123	1	-	-	1.48	0.52	14	17	-
		2	1.50	-	0.41	1.06	253	23	-
		3	0.41	0.44	0.38	0.51	46	20	-
Nickel	124	1	204	190	90	81	3220	710	-
		2	123	89	89	86	3400	850	-
		3	92	73	68	69	700	750	-
Selenium	125	1	31	30	-	-	-	-	193
		2	38	41	-	-	6	6	322
		3	32	-	30	35	-	9	267
Silver	126	1	-	-	-	-	80	50	-
		2	11	-	-	-	80	60	-
		3	11	-	-	-	60	60	-
Thallium	127	1	-	-	-	-	20	20	-
		2	-	-	-	-	80	-	-
		3	-	-	-	-	70	10	-
Zinc	128	1	836	492	122	58	40000	6100	155
		2	911	462	93	64	15800	8400	119
		3	857	449	143	69	6340	8040	171

Notes:
- \- Not Dectected
- x Analyzed by EPA-Region IV Laboratory
- xx Analyzed by Pomeroy, Johnston and Bailey

TABLE B-12

Analytical Results for Traditional Parameters for the Pretreatment Sampling Program-Week 2, mg/l

Sampling Location	Day	pH	SS	Sulfide as S	BOD_5	COD*	CN	Phenol	O & G	Cr^{+6}	NH_3-N as N
1. Effluent to POTW from Refinery No.											
a. No. 13	1	10.80	84	<0.1	450	972	0.13	51	774	<0.02	25.0
	2	10.00	86	0.1	402	789	0.14	60.6	83.6	<0.02	27.1
	3	11.42	56	<0.1++	361	764	0.34	106	13.9	<0.02	24.1
b. No. 21	1	8.75	20	<0.1	83	289	0.01	1.2	36	<0.02	2.1
	2	8.56	26	<0.1	202	441	0.02	2.1	34.5	<0.02	3.8
	3	8.65	24	<0.1++	90	322	0.03	1.1	32.7	<0.02	5.1
c. No. 45	1	7.32	22	<0.1	169	506	4.0	20	21.2	<0.02	161
	2	6.90	24	<0.1++	159	395	4.0	14.3	11.7	<0.02	92.0
	3	7.13	6	<0.1++	132	386	8.0	14.8	10.9	<0.02	57.5
d. No. 43 Direct Dis	1	8.24	14	<0.1	46	149	0.03	0.21	4.0	0.06	4.0
	2	7.60	36	<0.1++	57	130	0.01	0.04	3.8	<0.02	2.9
	3	7.29	36	<0.1++	12	111	0.05	0.06	3.1	<0.02	2.0
No. 43	1	7.68	58	<0.1	508	1,770	3.0	133	144	<0.02	32.0
	2	7.84	30	<0.1	528	2,430	8.0	151	142	<0.02	41.0
	3	7.52	8	<0.1++	556	3,330	9.0	148	117	<0.02	56.5
e. No. 16	1	7.51	29	<0.1	89	398	0.08	3.6	24.9	<0.02	20.5
	2	7.10	23	<0.1++	102	517	0.09	3.2	35.3	<0.02	30.4
	3	8.13	14	<0.1++	168	537	0.03	4.3	52.2	<0.02	22.7
2. POTW No. 2											
a. Influent	1	7.50	390	1.0	311	794	0.06	2.64	113	<0.02	35.8
	2	7.57	324	1.4	330	752	0.09	3.01	82	<0.02	40.5
	3	7.51	552	0.8	324	834	0.26	3.81	82	<0.02	35.1
b. Primary Effluent	1	7.50	82	0.2	190	437	0.05	3.16	29.3	<0.02	36.9
	2	7.58	112	0.2	198	420	0.11	3.11	32.3	<0.02	40.0
	3	7.51	92	0.1	180	450	0.44	4.35	34.7	<0.02	33.0
c. Final Effluent	1	7.68	188	0.6	181	539	0.06	2.79	38.7	<0.02	39.1
	2	7.77	184	0.4	203	502	0.11	3.07	47.3	<0.02	43.9
	3	7.55	232	0.4	187	603	0.44	4.14	52.0	<0.02	37.5
d. UNOX Influent	1	7.51	78	0.1	188	447	0.07	2.99	28.0	<0.02	32.1
	2	7.71	82	0.2	195	406	0.16	4.00	34.0	<0.02	37.9
	3	7.20	791	0.8	278	1,280	0.09	4.29	29.0	<0.02	34.0
e. UNOX Effluent	1	6.91	7	<0.1	3	61	0.06	<0.01	1.1	<0.02	35.9
	2	6.98	16	<0.1	6	86	0.05	0.03	3.1	<0.02	34.9
	3	7.00	9	<0.1	6	86	0.04	<0.01	1.0	<0.02	29.1
f. Primary Sludge	1	6.38	43,510	0.3	14,200	60,500	2.2	2.67	3,100	<0.02	39.9
	2	6.00	39,220	0.5	14,950	41,500	1.9	3.94	6,580	<0.02	40.1
	3	+	+	+	+	+	+	+	+	+	+
g. Digested Sludge	1	7.20	28,210	0.3	3,100	28,400	2.6	1.27	2,420	<0.02	870
	2	7.01	27,254	0.1	3,270	26,700	2.6	1.00	2,640	<0.02	436
	3	+	+	+	+	+	+	+	+	+	+
h. Centrate	1	7.59	13,970	0.4	2,060	17,500	1.5	0.88	1,660	<0.02	414
	2	7.58	13,940	0.2++	2,350	16,600	1.8	0.77	1,680	<0.02	420
	3	+	+	+	+	+	+	+	+	+	+

NOTE: Day 1 - 8/23/78; Day 2 - 8/24/78; Day 3 - 8/25/78. All samples were analyzed by the Water Quality Labs associated with POTW No. 2. Analyses for CN, Phenols and O & G were determined on grab samples. Remaining constituents were determined on 24 hour composites.

\+ Not sampled

++ Zinc Acetate added to remove interferences

TABLE B-13

ANALYTICAL RESULTS OF PRIORITY POLLUTANTS FOR THE PRETREATMENT SAMPLING PROGRAM - WEEK 2
VOLATILE ORGANICS (Concentrations, ug/L)

			POTW No. 2									Effluent to POTW from Refinery No.					
Pollutant	Poll. No.	Day **	x Inf.	Primary[x] Eff.	Unox[x] Inf.	Unox[x] Eff.	Final[x] Eff.	xx Centrate	xx Primary Sludge	xx Digested Sludge	xx Filter Cake (mg/kg)	x 13	x 21	45[x]	43x Direct	43x	16[x]
Benzene	4	1	62	71	79			-	40	17	6		1200	226	-	*	380
		2	57	67	77	*	62					*	*	240	*	47	140
		3	24	27	45	-	31	35	130	19	-	349	198	319	-		
Carbon Tetra-chloride	6	1	-	-	-			-	5	-	-		-	-	-	-	-
		2	111	-	-	-	-					-	-	-	-	-	-
		3	100	-	-	-	184	-	6	-	-	-	-	-	-	-	-
Chlorobenzene	7	1	-	-	-			-	-	-	-	-	-	-	*	-	-
		2	-	-	-	-	-					-	-	-	-	-	-
		3	-	-	-	-	-	-	-	-	-	-	-	-	-	-	-
1,2-dichloroethane	10	1	30	30	-			-	7	12	5		-	-	*	-	-
		2	-	19	-	-	14					-	54	-	18	-	-
		3	500	714	-	*	621	11	-	-	-	*	33	-	24		
1,1,1-trichloro-ethane	11	1	200	98	306			-	-	-	-	-	-	-	-	-	-
		2	535	95	159	231	97					14	-	-	-	15	-
		3	230	252	482	370	364	-	50	-	-	*	-	-	-		
1,1-dichloroethane	13	1	-	-	*				30	6	-		-	-	-	-	-
		2	-	-	-	*	-					-	-	-	-	-	-
		3	-	-	*	11	*	10	25	12	-	-	-	-	-		
1,1,2,2-tetrachloro-ethane	15	1	-	-	-				-	-	-		-	-	-	-	-
		2	-	-	-	-	51					-	-	-	-	-	-
		3	-	-	-	-	-	-	-	-	-	-	-	-	-		
Chloroform	23	1	13	13	10			-	13	-	-		18	*	*	-	*
		2	11	14	12	15	12					9	21	*	*	-	-
		3	21	111	14	14	19	-	-	-	-	*	19	*	*		
1,1-dichloro-ethylene	29	1	*	-	*			-	-	-	-		-	-	-	-	-
		2	30	-	-	-	-					-	-	-	-	-	-
		3	-	-	32	16	-	-	-	-	-	-	-	-	-		
1,2-trans-dichloro-ethylene	30	1	-	-	-			-	-	30	-		-	-	-	-	-
		2	-	-	-	-	-					-	-	-	-	-	-
		3	-	-	-	-	-	25	-	-	-	-	-	-	-		

TABLE B-13 (Continued)

ANALYTICAL RESULTS OF PRIORITY POLLUTANTS FOR THE PRETREATMENT SAMPLING PROGRAM - WEEK 2
VOLATILE ORGANICS (Concentrations, ug/L)

			POTW No. 2									Effluent to POTW from Refinery No.					
Pollutant	Poll. No.	Day **	x Inf.	Primary x Eff.	Unox x Inf.	Unox x Eff.	Final x Eff.	xx Centrate	xx Primary Sludge	xx Digested Sludge	xx Filter Cake (mg/kg)	x 13	x 21	45 x	43x Direct	43x	16 x
1,2-dichloro-	33	1	-	-	-			-	-	-	-		-	-	-	-	-
propylene		2	-	-	3	-	-					-	-	-	-	-	-
		3	-	-	-	-	-	-	-	-	-	-	-	-	-		
Ethylbenzene	38	1	33	41	31			-	70	55	25		18000	108	-	-	383
		2	59	51	47	*	53					*	*	130	-	-	170
		3	53	46	47	-	48	35	150	75	15	410	220	76	-		
Methylene Chloride	44	1	24	44	67			(6)*	(7)*450	-	-		*	-	-	12	-
		2	221	15	11	-	44					-	-	-	-	-	-
		3	37	14	-	-	40	-	540	6	13	-	-	-	-		
Dichlorobromo-	48	1	-	-			-	-	-	-	-	-	-	-	-	-	-
methane		2	-	-	-	*	-						-	-	-	-	-
		3	-	-	-	*	-	-	-	-	-	-	-	-	-		
Chlorodibromo-	51	1	-	-	-			-	-	-	-		-	-	-	-	-
methane		2	-	-	*	-	-					-	-	-	-	-	-
		3	-	-	-	-	-	-	-	-	-	-	-	-	-		
Tetrachloro-	85	1	73	70	85			-	9	-	-		-	-	-	-	-
ethylene		2	64	65	67	129	-					-	-	-	-	-	-
		3	63	61	98	133	76	-	-	-	-	-	-	-	-		
Toluene	86	1	161	197	202				140	60(6)	35		48000	426	-	*	870
		2	127	156	174	*	-					*	*	420	-	*	370
		3	61	72	86	-	80	65	260	75	8	4600	7500	457	-		
Trichloroethylene	87	1	12	15	29			-	250	-	-		-	-	-	-	-
		2	14	21	26	22	-					-	-	-	-	-	-
		3	12	12	24	*	15	-	380	10	-	-	-	-	-		

Note: - not detected; * in traces but below detection limit; () sample blank. No volatile organics detected for other sample blanks; x - analysis performed by West Coast Technical Services; xx - analysis performed by Pomeroy, Johnston & Bailey; priority pollutants not listed were not detected; **Day 1, 2, & 3 are respectively August 23, 24, and 25 of 1978.

TABLE B-14

ANALYTICAL RESULTS OF PRIORITY POLLUTANTS FOR THE PRETREATMENT SAMPLING PROGRAM - WEEK 2
SEMIVOLATILE ORGANICS (CONCENTRATIONS, ug/l)

				POTW No. 2									Effluent to POTW from Refinery No.					
Pollutant	**	Poll No.	Day	Inf.[x]	Pri.[x] Eff.	Unoxx Inf.	Unoxx Eff.	Final[x] Eff.	xx Centrate	Pri.[xx] Sludge	Dig.[xx] Sludge	Filter Cake[xx] (mg/kg)	13X	21X	45X	43x Direct	43x	16x
Parachlorometacresol	AE	22	1	-	-	-			-	-	-	-		*	-	-	-	-
			2	-	-	-	-	-					-	-	-	-	-	-
			3	-	-	-	-	96	-	-	-	-	-	-	-	-		
2-Chlorophenol	AE	24	1	-	-	-			-	-	-	-		*	-	-	-	-
			2	-	-	-	-	-					-	-	-	-	-	-
			3	-	-	-	-	-	-	-	-	-	-	-	-	-		
2,4-dimethylphenol	AE	34	1	300	-	317			-	-	-	-		202	459	-	599	385
			2	220	230	210	-	180					1300	430	720	*	9300	250
			3	720	750	470	-	740	-	-	-	-	3600	550	2000	16		
Pentachlorophenol	AE	64	1	-	-	-			-	-	-	-		-	-	-	-	-
			2	-	-	-	-	-					-	-	-	-	-	*
			3	-	-	-	-	-	-	-	-	-	-	-	-	-	-	
Phenol	AE	65	1	700	840	620			7300	470	1900	-		218	4200	-	-	944
			2	150	210	190	*	160					1100	63	1000	-	14,000	185
			3	840	600	420	*	660	4600	-	1300	-	2200	119	2200	-		
Acenaphthene	BNE	1	1	*	*	-			-	-	-	-		-	17	*	-	-
			2	-	-	-	-	-					18	-	41	*	-	-
			3	*	*	-	-	-	-	-	-	-	-	-	*	*		
1,2,4-trichloro benzene	BNE	8	1	*	29	-			-	-	-	-		-	-	-	-	-
			2	-	-	-	*	-					-	-	-	-	-	-
			3	20	-	-	-	-	-	-	-	-	-	-	-	-		
1,2-dichlorobenzene	BNE	25	1	48	57	24			85	35	30	-		-	-	-	-	-
			2	27	32	32	*	12					-	-	-	-	-	-
			3	13	14	14	-	22	170	135	245	45	-	-	-	-		
1,3-dichlorobenzene	BNE	26	1	*	*	*			55	40	25	-		-	-	-	-	-
			2	20	*	*	-	*					-	-	-	-	-	-
			3	12	*	*	21	-	-	-	-	-	-	-	-	-	-	-
1,4-dichlorobenzene	BNE	27	1	17	17	12			55	40	25	-		-	-	-	-	-
			2	20	16	17	*	*					-	-	-	-	-	-
			3	12	*	*	*	12	140	105	180	40	-	-	-	-		
2,4-dinitrotoluene	BNE	35	1	-	-	-			-	-	-	-		-	-	20	-	-
			2	-	-	-	-	-					-	-	-	-	-	-
			3	-	-	-	-	-	-	-	-	-	-	-	-	-		
1,2-*diphenylhydrazine*	BNE	37	1	-	-	-			-	-	-	-		-	-	-	23	-
			2	-	-	-	-	-					-	-	-	-	-	-
			3	-	-	-	-	-	-	-	-	-	-	-	-	-		

TABLE B-14

ANALYTICAL RESULTS OF PRIORITY POLLUTANTS FOR THE PRETREATMENT SAMPLING PROGRAM - WEEK 2
SEMIVOLATILE ORGANICS (CONCENTRATIONS, ug/l)

				POTW No. 2									Effluent to POTW from Refinery No.					
Pollutant	**	Poll No.	Day	Inf.[x]	Pri.[x] Eff.	Unoxx Inf.	Unoxx Eff.	Final[x] Eff.	xx Centrate	Pri.[xx] Sludge	Dig.[xx] Sludge	Filter Cake[xx] (mg/kg)	13X	21X	45X	43x Direct	43x	16x
Fluorathene	BNE	39	1	-	-	-			-	-	-	-		-	-	-	-	-
			2	-	-	-	-	-					-	-	*	-	-	*
			3	-	-	-	-	-	-	-	-	-	-	-	-	-		
bis(2-chloroisopropyl) ether	BNE	42	1	-	-	-			-	-	-	-		-	-	-	-	-
			2	-	-	-	-	-					-	-	-	-	-	-
			3	-	-	-	-	-	-	-	-	-	-	-	*	-		
bis(2-chloxoethoxy) methane	BNE	43	1	-	-	-			-	-	-	-		-	-	-	-	-
			2	-	-	-	-	-					-	-	-	-	-	-
			3	-	-	-	-	-	-	-	-	-	-	*	-	-		
Isophorone	BNE	54	1	-	-	-			-	-	-	-		-	-	-	-	-
			2	-	-	-	-	-					12	-	-	-	-	-
			3	-	-	-	-	-	-	-	-	-	-	-	-	-		
Naphthalene	BNE	55	1	28	23	23			340	70	125	-		285	425	-	-	88
			2	*	35	33	-	-						140	91	-	-	18
			3	27	25	16	*	55	480	305	565	90	92	62	170	-		
N-nitroso diphenyl amine	BNE	62	1	-	-	-			-	-	-	-		-	-	-	-	-
			2	-	-	-	-	-					-	-	-	-	-	-
			3	-	-	-	-	-	-	-	-	-	-	-	-	41		
bis(2-ethylhexyl) phthalate	BNE	66	1	13	33	22			440	250	300	-		-	-	*	-	*
			2	30	29	17	*	-					*	*	*	*	*	-
			3	43	23	23	14	61	810	-	-	250	*	*	-	*		
Butyl benzyl phthalate	BNE	67	1	-	28	16			-	-	-	-		-	-	*	-	*
			2	21	13	10	*	-					-	*	-	*	*	-
			3	*	14	16	13	27	-	-	-	-	*	10	-	*		
di-n-butyl phthalate	BNE	68	1	*	27	15			-	-	-	-		*	*	-	*	-
			2	*	*	*	*	-					-	*	-	14	*	-
			3	17	11	*	*	22	-	-	-	-	-	-	-	*		
di-n-octyl phthalate	BNE	69	1	-	-	*			-	-	-	-		-	-	-	-	-
			2	-	*	*	-	-					-	-	-	-	-	-
			3	-	-	-	-	-	-	-	-	-	-	-	-	-		

TABLE B-14

ANALYTICAL RESULTS OF PRIORITY POLLUTANTS FOR THE PRETREATMENT SAMPLING PROGRAM - WEEK 2
SEMIVOLATILE ORGANICS (CONCENTRATIONS, ug/l)

				POTW No. 2									Effluent to POTW from Refinery No.					
Pollutant	**	Poll No.	Day	Inf.x	Pri.x Eff.	Unoxx Inf.	Unoxx Eff.	Finalx Eff.	xx Centrate	Pri.xx Sludge	Dig.xx Sludge	Filter Cake xx (mg/kg)	13X	21X	45X	43x Direct	43x	16x
diethyl phthalate	BNE	70	1	-	10	*			6	14	6	-		-	-	*	11	-
			2	*	*	*	-	-					38	12	-	-	-	-
			3	*	*	*	-	*	10	15	6	-	-	-	-	-		
dimethylphthalate	BNE	71	1	-	*	-			-	-	-	-		-	-	-	-	*
			2	-	-	*	-	-					-	-	-	-	-	-
			3	-	-	-	-	-	-	-	-	-	-	-	-	-		
benzo(a)anthracene††	BNE	72	1	-	-	-			-	-	-	-		-	-	-	-	-
			2	-	-	-	-	-					*	-	*	*	*	-
			3	-	-	-	-	-	-	-	-	-	12	-	-	*		
Chrysene††	BNE	76	1	-	-	-			-	-	-	-		-	-	-	-	-
			2	-	-	-	-	-					*	-	*	*	*	-
			3	-	-	-	-	-	-	-	-	-	12	-	-	*		
Acenaphythylene	BNE	77	1	-	-	-			-	-	-	-		-	-	-	-	-
			2	-	-	-	-	-					-	-	-	-	-	-
			3	-	-	*	-	-	-	-	-	-	-	-	-	-		
Anthracene†	BNE	78	1	*	*	*			-	-	-	-		*	81	*	*	*
			2	*	*	*	-	-					36	*	39	-	-	-
			3	*	*	*	-	*	-	-	-	-	29	*	54	*		
Fluorene	BNE	80	1	*	-	-			-	-	-	-		-	-	-	-	-
			2	-	*	*	-	-					14	-	-	-	-	*
			3	*	-	-	-	-	-	-	-	-	*	-	-	-		
Phenanthrene†	BNE	81	1	*	*	*			-	-	-	-		*	81	*	*	*
			2	*	*	*	-	-					36	*	39	-	-	-
			3	*	*	*	-	*	-	-	-	-	29	*	54	*		
Pyrene	BNE	84	1	-	*	-			-	-	-	-		-	-	*	-	-
			2	-	-	-	-	-					*	-	16	*	-	*
			3	-	-	-	-	-	-	-	-	-	*	-	*	-		

NOTE: Of 59 semivolatiles, only 31 were detected
- * in traces, but below detection limit
- ** AE - Acid Extractable; BNE - Base/Neutral Extractable
- † Anthracene and Phenanthrene are unresolved
- †† Chrysene and Benzo (a) anthracene are unresolved
- \- Not detected
- x Samples analyzed by West Coast Technical Services
- xx Samples analyzed by Pomeroy, Johnston & Bailey

TABLE B-15

Analytical Results of Priority Pollutants for the Pretreatment Sampling Program - Week 2

Pesticides (Concentrations, ug/l)

Pollutant	Poll No.	xx Day	POTW No.2 Inf[x]	Primary[x] Eff.	Unox[x] Inf	Unox[x] Eff	Final[x] Eff	xx Centrate	xx Primary Sludge	xx Digested Sludge	xx Filter Cake (mg/kg)	Effluent to POTW from Refinery No. 13X	21X	45X	43x Direct	43x	16X
Aldrin	89	1	-	-	-			-	-	-	-		-	-	-	-	-
		2	-	-	-	-	-					-	-	-	-	-	-
		3	3.60	-	0.10	-	-	-	-	-	-	-	1.0	0.29	0.82		
Dieldrin	90	1	-	-	-			-	-	-	-		-	-	-	-	-
		2	-	-	-	-	0.08					-	-	-	-	-	-
		3	-	-	-	-	-	-	-	-	-	-	-	-	-		
4,4'-DDT	92	1	-	-	-			-	-	-	-		-	-	0.30	-	4.90
		2	-	0.17	-	-	-					0.08	-	0.09	-	-	-
		3	0.11	-	-	-	-	-	-	-	-	0.39	-	-	0.83		
4,4'-DDE	93	1	-	0.09	0.35			-	-	-	-		-	-	-	-	-
		2	0.19	-	0.11	-	-					0.17	-	-	-	-	-
		3	-	-	0.66	-	0.17	-	-	-	-	-	-	-	-		
4,4'-DDD	94	1	0.38	-	-			-	-	-	-		-	-	-	-	-
		2	-	-	-	-	-					-	-	-	-	-	-
		3	-	-	-	-	-	-	-	-	-	-	-	-	-		
A-endosulfan-Alpha	95	1	-	-	-			-	-	-	-		-	-	-	-	-
		2	-	-	-	-	-					-	-	-	-	-	-
		3	0.12	-	0.52	-	0.22	-	-	-	-	-	-	-	-		
Heptachlor	100	1	0.47	0.10	0.45			-	-	-	-		-	-	-	-	-
		2	-	-	-	-	1.75					-	-	-	-	-	-
		3	0.70	-	-	-	-	-	-	-	-	-	-	-	-		
Heptachlor epoxide	101	1	-	-	-			-	-	-	-		-	-	-	-	-
		2	-	-	-	-	-					-	-	-	-	-	-
		3	-	2.10	-	-	-	-	-	-	-	-	-	-	0.32		
A-BHC-Alpha	102	1	-	-	1.30			-	-	-	-		-	-	0.52	-	-
		2	-	0.24	-	1.5	1.62					-	0.17	0.27	0.36	2.21	0.41
		3	0.88	-	1.20	1.40	0.76	-	-	-	-	0.43	0.08	-	-		
B-BHC-beta	103	1	-	0.16	0.76			-	-	-	-		-	-	-	-	-
		2	-	-	-	-	-					-	-	-	0.32	-	-
		3	-	-	-	-	-	-	-	-	-	-	-	-	-		
R-BHC-Gamma	104	1	-	-	0.27			-	-	-	-		-	-	-	-	-
		2	-	-	-	-	-					-	-	-	-	-	-
		3	-	-	-	-	-	-	-	-	-	-	-	-	-		
G-BHC-Delta	105	1	1.25	0.45	1.50			-	-	-	-		-	-	-	-	-
		2	-	-	-	-	-					-	-	-	-	-	-
		3	-	-	0.27	-	-	-	-	-	-	-	-	-	-		

NOTE: Of the 25 Pesticides, only 12 were found; however, none of them were confirmed by GCMS

- \- not detected
- x samples analyzed by West Coast Technical Services
- xx samples analyzed by Pomeroy, Johnston and Bailey

TABLE B-16

ANALYTICAL RESULTS FOR PRIORITY POLLUTANTS FOR THE PRETREATMENT SAMPLING PROGRAM - WEEK 2

METALS (CONCENTRATIONS, ug/l)

			POTW No. 2									Effluent to POTW from Refinery No.					
Pollutant	Poll. No.	Day	Influent x	Primary Effluent x	Unox Influent x	Unox Effluent x	Final Effluent x	Centrate xx	Primary Sludge xx	Digested Sludge xx	Filter Cake xx(mg/kg)	13 x	21 x	45 x	43x Direct x	43 x	16 x
Antimony	114	1	-	-	-	-	-	58	1000	625	7	-	-	-	-	-	-
		2	33	33	-	-	35	1000	1000	625	13	-	-	-	-	-	-
		3	-	-	-	-	-					-	-	-	-	-	-
Arsenic	115	1	40	-	26	-	29	162	324	285	3	27	-	-	-	60	-
		2	37	-	-	-	-	196	427	297	2	-	-	-	-	67	35
		3	66	-	49	-	-					-	-	-	-	69	34
Beryllium	117	1	-	-	-	-	-	10	4	4	0.04	-	-	-	-	-	-
		2	-	-	-	-	-	2	10	10	0.07	-	-	-	-	-	-
		3	-	-	-	-	-					-	-	-	-	-	-
Cadmium	118	1	28	12	13	-	20	580	2020	1050	16	-	-	-	-	-	-
		2	27	20	14	-	25	1040	1200	1580	9	-	-	-	-	-	-
		3	28	13	77	-	26					-	-	-	-	-	-
Chromium	119	1	520	151	162	45	369	17100	57000	29600	461	1345	747	670	233	72	1644
		2	427	154	177	45	334	27600	39600	42500	249	845	824	646	192	70	2196
		3	573	164	1249	50	456					1133	1254	603	186	64	1800
Copper	120	1	376	141	251	24	390	6900	29000	13300	243	22	14	25	10	57	17
		2	349	153	162	23	311	12300	31000	19200	173	-	17	19	-	47	12
		3	529	176	1019	25	341					-	15	19	-	38	14
Lead	122	1	235	62	58	-	135	4200	18600	10800	214	43	42	33	35	-	39
		2	220	62	50	-	126	7600	18200	15300	247	-	36	-	-	-	-
		3	254	70	277	-	168					-	38	-	-	-	36
Mercury	123	1	0.25	1.69	1.82	2.46	0.49	94	124	232	1.6	0.79	-	0.67	-	-	-
		2	0.37	0.25	0.43	-	-	90	171	147	1.5	0.37	-	0.46	-	-	-
		3	-	0.49	-	-	-					1.08	-	-	-	-	-
Nickel	124	1	399	208	220	206	290	3200	6650	6300	119	-	-	-	-	-	-
		2	265	190	246	236	272	6500	6950	9810	67	-	-	-	-	27	-
		3	304	228	743	310	343					-	-	-	-	-	-

TABLE B-16

ANALYTICAL RESULTS FOR PRIORITY POLLUTANTS FOR THE PRETREATMENT SAMPLING PROGRAM - WEEK 2

METALS (CONCENTRATIONS, ug/l)

			POTW No. 2									Effluent to POTW from Refinery No.					
Pollutant	Poll. No.	Day	Influent x	Primary Effluent x	Unox Influent x	Unox Effluent x	Final Effluent x	Centrate xx	Primary Sludge xx	Digested Sludge xx	Filter Cake xx(mg/kg)	13 x	21 x	45 x	43x Direct x	43 x	16 x
Selenium	125	1	-	-	35	-	29	5	5	6	0.06	101	-	132	-	248	90
		2	33	-	36	-	37	5	5	7	0.06	109	33	158	-	514	199
		3	37	-	66	-	-					110	-	140	-	682	149
Silver	126	1	15	-	-	-	-	70	80	50	0.93	-	-	-	-	-	-
		2	11	-	-	-	11	60	100	90	1	-	-	-	-	-	-
		3	13	-	40	-	10					-	-	-	-	-	-
Thallium	127	1	-	-	-	-	-	20	80	10	0.3	-	-	-	-	-	-
		2	-	-	-	-	-	50	50	50	0.3	-	-	-	-	-	-
		3	-	-	-	-	-					-	-	-	-	-	-
Zinc	128	1	945	274	232	144	820	25600	69000	47000	771	190	153	183	115	57	196
		2	952	375	452	178	810	43400	52600	70000	457	116	173	182	137	49	405
		3	1593	385	2086	178	1027					55	189	174	158	36	398

Notes: - Not Detected.
x Analyzed by EPA Region IV Laboratory
xx Analyzed by Pomeroy, Johnston and Bailey
Centrate, primary sludge, digested sludge and filter cake were not sampled for on day 3.

APPENDIX C

GLOSSARY AND ABBREVIATIONS

Act: The Federal Water Pollution Control Act, P.L. 92-500, October 18, 1972. As amended by the Clean Water Act of 1977.

Administrator: Administrator of the U.S. Environmental Protection Agency whose duties are to administer the Act.

American Petroleum Institute et al. v. EPA, U.S. Court of Appeals - Tenth Circuit, August 11, 1976. API challenged the regulations promulgated in 1974. The Court upheld, BPT and NSPS, while remanding BAT and storm water effluent guidelines.

Appendix A Pollutants: Pollutants listed in Appendix A of the Settlement Agreement of June 7, 1976.

Best Available Technology Economically Achievable (BATEA or BAT): Treatment required by July 1, 1983, for industrial discharge to surface waters as defined by Section 301 (b) (2) (A) of the Act.

Best Conventional Technology Economically Achievable (BCT): Treatment required by July 1, 1984 for industrial discharge as defined by Section 301(b)(2)(E) of the Act.

Best Practicable Control Technology Currently Achievable (BPCTCA or BPT): Treatment required by July 1, 1977, for industrial discharge to surface waters as defined by Section 301 (b) (1) (A) of the Act.

Best Available Demonstrated Technology (BADT): Treatment required for new sources as defined by Section 306 of the Act.

Catalyst: A substance that can change the rate of a chemical reaction but is not involved in the reaction.

Conventional Pollutants: Conventional pollutants are those defined in Section 304(a)(4) including: biological oxygen demanding pollutants (BOD_5), total suspended solids (TSS), fecal coliforming, and pH, and any additional pollutants defined by the Administrator as "conventional" (oil and grease).

Data Validation: An operation performed to ensure the accuracy and reliability of raw input information.

Dependent Variable: A variable whose value is a function of one or more independent variables.

Direct Discharger: A facility which discharges or may discharge pollutants into waters of the United States.

Economics Survey: Survey mailed by the Office of Analysis and Evaluation of EPA to the petroleum refining industry, pursuant to Section 308 of the Act requesting data on the economic status of petroleum refineries.

End-of-Pipe Treatment (Control): Wastewater treatment technologies that are used after gravity oil separation.

Flow Model: A mathematical model of the effluent wastewater flow.

Independent Variable: A variable whose value is not dependent on the value of any other variable.

Indirect Discharger: A facility which discharges or may discharge pollutants into a publicly owned treatment works.

In-plant Treatment Control: Treatment techniques that are used to reduce, reuse, recycle, or treat wastewater before end-of-pipe treatment.

Linear Regression: A method to fit a line through a set of points so that the sum of squared vertical deviations of the point values from the fitted line is a minimum; i.e., no other line, no matter how it is computed, will have a smaller sum of squared distances between the actual and predicted values of the dependent variable.

Mathematical Model: A quantitative equation or system of equations formulated so that the structure of a situation and the relationships among the relevant variables are reasonably depicted.

Mean Value: The statistical expected or average figure.

Multiple Linear Regression: A method to fit a plane through a set of points so that the sum of squared distances between the individual observations and the estimated plane is a minimum. This statistical technique is an extension of linear regression in that more than one independent variable is used in the least squares equation.

Portfolios A, B: The two sections that make up the 1977 U.S. EPA Petroleum Refining Industry Survey (see "1977 Survey").

Priority Pollutants: Pollutants included in Tables VI-5 and VI-6 of this document.

Process Configuration: A numerical measurement of a refinery's process complexity that was developed for use in calculating BPT limitations for this industry.

Process Factor: A factor that is based on process configuration and used in calculating BPT Limitations for a particular petroleum refinery.

Random Process: A procedure that varies according to some probability function.

Random Variable : A variable whose values occur according to the distribution of some probability function.

Regression Statistics: Values generated during a regression analysis that identify the significance, or reliability, of the regression-generated figures.

Regression Model: A mathematical model, usually a single equation, developed using a least squares linear regression analysis.

Residuals: The differences between the expected and actual values in a regression analysis.

Settlement Agreement of June 7, 1976: Agreement between the U.S. Environmental Protection Agency (EPA) and various environmental groups, as instituted by the United States District Court for the District of Columbia, directing the EPA to study and promulgate regulations for a list of chemical substances, referred to as Appendix A Pollutants.

Significance: A statistical measure of the validity, confidence, and reliability of a figure.

Size Factor: A factor that is based on a petroleum refinery's size and used in calculating a petroleum refinery's BPT limitations.

Sour Waters: Wastewaters containing sulfur compounds, such as sulfides and mercaptans.

Statistical Stability: A condition in which when a process is repeated over time, differences occur that are due solely to random processes.

Statistical Variance: The sum of the squared deviations about the mean value in proportion to the likelihood of occurrence. A measure used to identify the dispersion of a set of data.

The 1977 EPA Petroleum Refining Industry Survey (1977 Survey): A survey mailed pursuant to Section 308 of the Act to 274 refineries on February 11, 1977, and an additional 23 refineries on August 12, 1977. The survey was issued in two sections, Portfolio A and Portfolio B, requesting data on various aspects of process operations, wastewater production, and wastewater treatment.

Tolerance Limits: Numerical values identifying the acceptable range of some variable.

Traditional Pollutant Parameters: Pollutant parameters considered and used in the development of BPT limitations guidelines. These parameters include, but are not limited to BOD, COD, TOC, TSS, and ammonia.

ABBREVIATIONS

API:	American Petroleum Institute
BATEA (BAT):	Best Available Technology Economically Achievable
bbl:	Barrel
BCTEA (BCT):	Best Conventional Technology Economically Achievable Under Section 304(b)(4) of the Act.
BOD_5:	Five Day Biochemical Oxygen Demand
BPCTCA (BPT):	Best Practicable Control Technology Currently Available Under Section 304(b)(1) of the Act.
B & R:	Burns and Roe
COD:	Chemical Oxygen Demand
DMR:	Discharge Monitoring Report
EPA:	U.S. Environmental Protection Agency
GC:	Gas Chromatography
Kg/m^3:	Kilograms Per Cubic Meter
lb/bbl:	Pounds Per Barrel (One Barrel Equals 42 Gallons)
MS:	Mass Spectrometry
MGD:	Million Gallons Per Day
mg/L:	Milligrams Per Liter
NPDES:	National Pollutant Discharge Elimination System Permit Issued Under Section 402 of the Act.
NSPS:	New Source Performance Standards Under Section 306 of the Act.
POTW:	Publicly Owned Treatment Works
ppb:	Parts Per Billion
PSES:	Pretreatment Standards for New Sources of Indirect Discharges Under Section 307(b) of the Act.
PSNS:	Pretreatment Standards for New Sources of Indirect Discharges Under Section 307(b) of the Act.

ABBREVIATIONS
(Continued)

RCRA:	Resources Conservation and Recovery Act (P.L. 94-580) of 1978, Amendments to Solid Waste Disposal Act.
RSKERL:	Robert S. Kerr Environmental Research Laboratory
S & A:	Surveillance and Analysis
SPSS:	Statistical Package for the Social Sciences
TOC:	Total Organic Carbon
TSS:	Total Suspended Solids
ug/L:	Micrograms Per Liter

*U.S. GOVERNMENT PRINTING OFFICE : 1982 0-381-085/4492