United States
Environmental Protection
Agency

Environmental Sciences Research
Laboratory
Research Triangle Park NC 27711

EPA-600/8-80-016
April 1980

Research and Development

Library Copy

EPA

PROPERTY OF
DIVISION
OF
METEOROLOGY

User's Guide for MPTER

A Multiple Point Gaussian Dispersion Algorithm with Optional Terrain Adjustment

RESEARCH REPORTING SERIES

Research reports of the Office of Research and Development, U S Environmental Protection Agency, have been grouped into nine series. These nine broad categories were established to facilitate further development and application of environmental technology. Elimination of traditional grouping was consciously planned to foster technology transfer and a maximum interface in related fields. The nine series are

1 Environmental Health Effects Research
2 Environmental Protection Technology
3 Ecological Research
4 Environmental Monitoring
5 Socioeconomic Environmental Studies
6. Scientific and Technical Assessment Reports (STAR)
7 Interagency Energy-Environment Research and Development
8. "Special" Reports
9 Miscellaneous Reports

This report has been assigned to the "SPECIAL" REPORTS series. This series is reserved for reports targeted to meet the technical information needs of specific user groups The series includes problem-oriented reports, research application reports, and executive summary documents Examples include state-of-the-art analyses, technology assessments, design manuals, user manuals, and reports on the results of major research and development efforts.

This document is available to the public through the National Technical Information Service, Springfield, Virginia 22161.

EPA-600/8-80-016
APRIL 1980

USER'S GUIDE FOR MPTER

A Multiple Point Gaussian Dispersion Algorithm
With Optional Terrain Adjustment

by

Thomas E. Pierce* and D. Bruce Turner*

Meteorology and Assessment Division

Environmental Sciences Research Laboratory

Research Triangle Park, NC 27711

ENVIRONMENTAL SCIENCES RESEARCH LABORATORY
OFFICE OF RESEARCH AND DEVELOPMENT
U. S. ENVIRONMENTAL PROTECTION AGENCY
RESEARCH TRIANGLE PARK, NC 27711

DISCLAIMER

This report has been reviewed by the Environmental Sciences Research Laboratory, U. S. Environmental Protection Agency, and approved for publication. Mention of trade names or commercial products does not constitute endorsement or recommendation for use.

AUTHORS' AFFILIATION

The authors are on assignment to the U. S. Environmental Protection Agency from the National Oceanic and Atmospheric Administration, U. S. Department of Commerce.

PREFACE

One area of research within the Meteorology and Assessment Division is development, evaluation, validation, and application of models for air quality simulation, photochemistry, and meteorology. The models must be capable of describing air quality and atmospheric processes affecting the disposition of airborne pollutants, on scales ranging from local to global. Within the Division, the Environmental Operations Branch adapts and evaluates new and existing meteorological dispersion models and statistical technique models, tailors effective models for recurring user application, and makes these models available through EPA's computer network system.

MPTER is an adaptation of the point source portion of RAMR, using Gaussian point source modeling techniques.

Although attempts are made to thoroughly check computer programs with a wide variety of input data, errors are occasionally found. Revisions may be obtained as they are issued by completing and sending the form on the last page of this guide.

Comments and suggestions regarding this publication should be directed to:

Chief, Environmental Operations Branch
Meteorology and Assessment Division (MD-80)
Environmental Protection Agency
RESRCH TRI PK, NC 27711

Technical questions regarding use of the model may be asked by calling (919) 541-4564. Users within the Federal Government may call FTS 629-4564. The User's Guide is available from NTIS, Springfield, Va. 22161.

The magnetic tape containing all Fortran source codes for MPTER may be ordered from Computer Products, NTIS.

ABSTRACT

The information presented in this user's guide is directed to air pollution scientists interested in applying air quality simulation models. MPTER is the designation for Multiple Point source algorithm with TERrain adjustments. This algorithm is useful for estimating air quality concentrations of relatively nonreactive pollutants; hourly estimates are made using the Gaussian steady-state model. The algorithm is most applicable for source-receptor distances less than 10 km and for locations with level or rolling terrain where a single wind vector for each hour adequately approximates the flow over the source and receptor sites. The terrain adjustment option is limited in application to receptors whose elevation is no higher than the lowest stack top elevation of the sources considered. Calculations are performed on the hourly meteorological data that the model requires: wind direction, wind speed, temperature, stability class, and mixing height. Emission information required of the point sources are source coordinates, emission rate, physical height, stack diameter, stack gas exit velocity, and stack gas temperature.

In addition to terrain adjustment, options are available for stack downwash, gradual plume rise, and buoyancy-induced dispersion. All printed output is optionally available so the user can avoid unneeded output volume. General information is contained in the Executive Summary and the first three chapters. The technical basis for the algorithm is given in Chapter 4 and Appendices A and B. The remaining material herein relates to use and understanding of the computer program for the algorithm.

CONTENTS

Preface iii
Abstract. iv
Figures vi
Tables. vi
Acknowledgments viii

Executive Summary 1
1. Introduction. 3
2. Data Requirements 4
3. Recommendations 7
Uses 7
Assumptions. 9
Sources of error and accuracy. 13

4. Basis for MPTER 15
Gaussian modeling. 15
Inputs 16
Plume rise 18
Dispersion Parameters. 19
Gaussian plume equations 19
Other considerations 20
Special optional features. 20

5. Overview of Computer Program. 25
Program description. 25
Additional comments. 26

6. Discussion of Computer Aspects of MPTER 28
Description of source code 28
Data preparation 28
Running costs and output volume. 41
Error messages and remedial action 44

7. Input Card, Input File and Output
File Specifications. 49

8. Example Problems. 65

References. 144
Appendices. 146

A. Point source computations 146
B. Plume rise. 150
C. Source program listing. 156

FIGURES

Number		Page
1	Adjustment of plume rise due to terrain.	24
2	Subroutine structure in MPTER.	27
3	Input data deck setup for MPTER.	56
4	System flow for MPTER.	57
5	Concentration as function of distance for source 2, hour 1 for four runs of example 2.	96

TABLES

Number		Page
1	Wind Profile Power Law Exponents Corresponding to a 0.03 m Roughness	17
2	Statistics Related to MPTER Source Code Size.	26
3	MPTER Output Volume	42
4	Maximum Output: 5-day run for 250 sources and 180 receptors	43
5	MPTER Card Type 1,2, and 3 - Title (3 cards).	49
6	MPTER Card 4 - Control and Constants (1 card)	50
7	MPTER Card 5 - Options (1 card)	51
8	MPTER Card 6 - Wind and Terrain (1 card).	52
9	MPTER Card Type 7 - Point Source (up to 250 cards). . .	52
10	MPTER Card Type 8 - Met. Data Identifiers	53
11	MPTER Card Type 9 - Specified Significant Sources (1 card).	53
12	MPTER Card Type 10 - Polar Coordinate Receptors (1 card).	53
13	MPTER Card Type 11 - Polar Coordinate Receptor Elevations (36 cards).	54
14	MPTER Card Type 12 - Receptor (up to 180 cards)	54
15	MPTER Card Type 13 - Segmented Run (1 card)	54

TABLES Cont'd

Number		Page
16	MPTER Card Type 14 - Meteorology	55
17	MPTER Optional Input File - Meteorological Data (Unit 11)	59
18	MPTER Optional Input File - Emission Data (Unit 15)	60
19	MPTER Optional Output Punched Cards - Average Concentrations (Unit 1)	60
20	MPTER Optional Output File - Partial Concentrations (Unit 10)	61
21	MPTER Optional Output File - Hourly Concentrations (Unit 12)	62
22	MPTER Optional Output File - Averaging - Period Concentrations (Unit 13)	63
23	MPTER Optional Temporary File - Values for High-Five Tables (Unit 14)	64

ACKNOWLEDGMENTS

The authors appreciate the discovery of errors and the suggestions for change received from the regional meteorologists, especially Mick Daye, in their provisional use of earlier MPTER versions; scientists in OAQPS, especially Jerome Mersch, are also thanked for their testing of MPTER.

The authors thank Barbara Gass of the State of Michigan, Department of Natural Resources for suggesting the conditions of the source used in Example 2.

The assistance of Barbara Hinton, Hazel Hevenor, Erik Sieurin, and especially that of Joan Emory is gratefully acknowledged.

EXECUTIVE SUMMARY

The MPTER computer code (Multiple Point source model with TERrain adjustments) provides a method to estimate air pollutant concentrations from multiple sources in rural environments, and can make optional adjustments for slight terrain variations.

Although the algorithm is based upon Gaussian modeling assumptions and incorporates the Pasquill-Gifford (P-G) dispersion parameter values, several technical options and various parameter values may also be entered as input. Hence, MPTER may be considered a research tool for exploratory use of various assumptions and parameter values.

```
*   *   *   *   *   *   *   *   *   *   *   *   *   *   *   *
*       If estimates are to be submitted for review to satisfy regula-  *
*   tory requirements, certain parameter values and options may be re-  *
*   required. Under these circumstances, specific applications of MPTER *
*   should be discussed with the appropriate regional meteorologist to  *
*   ensure that the calculations are performed in the most appropriate  *
*   way.                                                                *
*   *   *   *   *   *   *   *   *   *   *   *   *   *   *   *   *
```

MPTER can estimate the resulting concentrations at a maximum of 180 receptors from a maximum of 250 point sources. Gaussian assumptions and techniques are used to perform the estimates hourly, considering each hour as a steady state period. Required input information consists of point source and hourly meteorological data. Periods from one hour to one year may be simulated, with all output controlled by the user through selection of options.

Features of the algorithm include:

- Averaging periods of longer than 1 hour, if selected by user.
- Hourly meteorological data that may be read off punched cards for each hour, or from a tape (or disk) containing a year's data (same data as used for RAM or CRSTER).
- An optional terrain adjustment as a function of stability class.
- Inclusion or omission of stack downwash.
- Inclusion of gradual plume rise, or final rise only.
- Inclusion or omission of buoyancy-induced dispersion of pollutant at the source using the method of Pasquill.
- Input of anemometer height.
- Input of wind profile power law exponents as functions of stability.
- Concentration contributions that are available per hour and/or for the selected averaging period at each receptor from up to 25 sources.
- Concentrations available hourly and/or for the selected averaging period at each receptor.
- Optional output of the following information: average concentration over length of record, plus highest five concentrations for each receptor for four averaging times (1-, 3-, 8-, and 24-hour); and an additional averaging time selected by the user.
- Optional output files for further processing of concentrations that are available per hour and for each averaging period.

SECTION 1

INTRODUCTION

Although since the availability of UNAMAP (Version 3) in March of 1978 (EPA, 1978), there has been a model that will estimate impact from multiple sources in rural areas over flat terrain, RAMR (The rural version of RAM, Turner and Novak, 1978), and a model that will estimate impact from a single plant for situations where terrain features are no higher than the elevation of the lowest stack top for the plant, CRSTER (EPA, 1977), there has not been a readily available model that will consider both multiple sources and adjustments for slight terrain differences. The MPTER was assembled to fill this need.

MPTER, Multiple Point source model with TERrain adjustments, essentially bases its calculations for point sources on RAMR. The terrain adjustment factors are entered as functions of stability class. This algorithm is limited to terrain situations where receptor ground-level elevations are no higher than the elevation of the lowest stack top.

Computations can be made for 180 receptors and 250 point sources with the requirement that meteorological data be furnished for each hour that is simulated. Either short-term (several hours) or long-term (one year) calculations are available to the user. A number of options allows the user versatility in the amount of MPTER output; other options allow calculations of stack downwash, gradual plume rise, and enhanced initial plume size due to buoyancy induced turbulence.

Section 2 of this users guide gives the data requirements for employing MPTER and Section 3 discusses uses, assumptions, and sources of error and accuracy. These two sections should give the air pollution manager the background to decide if this algorithm is useful to his needs. Section 4 presents the mathematical basis for the algorithm, and the remaining sections provide information to the air pollution scientist or computer specialist wanting to prepare data and run the algorithm.

SECTION 2

DATA REQUIREMENTS

To estimate concentrations for any simulated time period, data for emissions, meteorology, receptors, and for program control are needed. These are discussed briefly here. More detail on proper formatting for data entry to the program is covered in Chapter 7.

EMISSION DATA

The following information on each point source is required as input:

- East coordinate of point source, user units
- North coordinate of point source, user units
- Sulfur dioxide emission rate, g s^{-1}
- Particulate emission rate, g s^{-1}
  - (Only one of the two emission rates given above will be used in a given run.)
- Physical stack height, m
- Stack gas temperature, K
- Stack inside diameter, m
- Stack gas exit velocity, m s^{-1}
- Stack ground-level elevation, user height units
  - (This last data entry is only needed if the terrain adjustment option is used. Any height units can be selected by the user if used throughout.)

The east-north coordinate system can be provided in any consistent units.

METEOROLOGICAL DATA

Meteorological data can be entered by use of a year's prepared data on tape (or disk) or on punched cards with a separate card for each simulated hour. Data on tape or disk are arranged with daily records. Meteorological data prepared with RAMMET or the CRSTER preprocessor are quite acceptable to the MPTER program. Hourly data on cards include the following:

- Year
- Julian day
- Hour
- Stability class
- Wind speed, m s^{-1}
- Ambient air temperature, K
- Wind direction, from which the wind blows, degrees clockwise from north
- Mixing height, top of the neutral or unstable layer, m (not required for stable conditions)

RECEPTOR DATA

MPTER has the capability of generating an array of receptors in polar coordinate form (explained in more detail later). For most applications, information is entered on a separate punched card for each receptor. The following information is required:

- East coordinate of receptor, user units
- North coordinate of receptor, user units
- Receptor height above local ground-level, m
- Receptor ground-level elevation, user height units (The elevation is required only if the terrain adjustment option is used.)

CONTROL DATA

The following control information is needed for a run. Some additional information, to be discussed later, may be required depending upon options selected. Control information needed includes:

- Headings (for output)
- Year
- Starting Julian Day
- Starting Hour
- Number of averaging periods to be run
- Number of hours in each averaging period
- Code for selecting the pollutant for this run (sulfur dioxide or particulate)
- Number of significant sources (used for contribution to concentration from individual sources)
- Additional averaging time for high-five table (explained later)
- Conversion for user units (east and north coordinates)
- Conversion for user height units
- Half-life of pollutant used in this run
- Values to select each option
- Anemometer height
- Wind profile power law exponents (one for each stability)
- Terrain adjustments, if used (one for each stability)

Further discussion of input data is given in Chapter 7.

SECTION 3

RECOMMENDATIONS

USES

As stated in the introduction, MPTER is a multiple point source dispersion model for situations that would be considered rural. Because optional adjustments can be made for slight terrain variations, careful study of model inputs is required to ensure the user's problem is addressed, and to provide proper output for the problem at hand. Also, since the model may be applied to impact analyses in response to regulatory requirements, the user should determine if certain options and/or parameter values are required by the potential reviewer in order to be acceptable.

Its versatility allows MPTER to function as both a tool for research and for more routine impact analysis. In research, numerous parameter variations can be explored for comparisons with measured air quality data, and various sensitivities can be determined.

A frequent use of the model will be to assess air pollutant impact to compare with National Ambient Air Quality Standards. Since the short-term standards are not to be exceeded more than once a year, extremes of the frequency distribution must be determined. Brute force approaches may be required to estimate these extremes through calculation of a full year's data, as is done by CRSTER. Receptor locations are input by the user, except when the model's option is used for generating a polar coordinate set of receptors centered in a specified location.

Determining appropriate receptor locations where maximum impact might be expected is a difficult user problem. Little guidance is available for selecting optimum receptor positions, but the following three steps may prove helpful: 1) use screening methods to locate distances to maxima; 2) at these distances, use polar coordinate locations about each source of significance, analyzing a year's or more meteorological data, and then 3) make estimates

using receptors at probable locations of source interaction.

In other diverse applications, MPTER can estimate concentrations from a single source for one simulated hour for one or more receptors, either at ground-level or varying heights above the ground, or it can simulate concentrations hour-by-hour for a year that result from 250 point sources at as many as 180 receptors.

MPTER is most applicable within 10 km of the source. Its use beyond this distance will be less accurate due to mesoscale influences, such as wind change with height, and to meteorological conditions that may vary during the time of transport.

The types of multiple-source applications for which MPTER is suited are similar to single-source applications of CRSTER, and include:

- Stack design studies
- Combustion source permit applications
- Regulatory variance evaluation
- Monitoring network design
- Control strategy evaluation for SIPs
- Fuel (e.g., coal) conversion studies
- Control technology evaluation
- Design of supplementary control systems
- New source review
- Prevention of significant deterioration (within 10 km of sources)

Computer time and costs will in general be proportional to the number of hours simulated, since each hour's simulation is done independently. Time and costs will also vary in proportion to the number of sources. Regarding receptors, time and costs will increase in proportion to the number of possible source-receptor pairs, i.e., the number of sources times the number of receptors. Use of a minimum number of receptors will therefore lower computer costs.

ASSUMPTIONS

The foundation of MPTER, including much of its computer code, is the point source portion of RAMR.

Gaussian Modeling

The following assumptions are made: 1) continuous plumes are diluted upon release by the wind speed at stack top; 2) dispersion from continuous plumes results in time averaged Gaussian distributions in both the horizontal and vertical directions through the dispersing plume; 3) concentration estimates may be made for each hourly period using the mean meteorological conditions appropriate for each hour; 4) the total concentration at a receptor is the sum of the concentrations estimated at the receptor from each source, i.e., concentrations are additive; and 5) concentrations at a receptor for periods longer than an hour can be determined by averaging the hourly concentrations over the period.

The upwind distance x and the crosswind distance y of the source from the receptor is determined as a function of the mean hourly wind direction. Dispersion parameter values are determined as functions of stability class and upwind distance. Equations to estimate concentration are selected dependent upon stability class, and, for neutral or unstable conditions, upon the relation of dispersion parameter value to mixing height (See Appendix A). The location of the receptor relative to the plume position is a dominant factor in the magnitude of the concentration.

Dispersion Parameter Values

The dispersion parameter values used in MPTER are the Pasquill-Gifford (P-G) parameters (Pasquill, 1961; Gifford, 1960) representative for open country (a roughness of approximately 0.03 m). The subroutines used to determine the parameter values are the same as in the UNAMAP programs PTDIS, PTMTP, and RAMR.

Except for stable layers aloft, which inhibit vertical dispersion, the atmosphere is treated as a single layer in the vertical that has the same rate of vertical dispersion throughout. Complete eddy reflection is assumed both from the ground and from the stable layer aloft, given by the mixing

height for neutral and unstable stabilities.

Plume Rise

Plume rise is calculated using the methods of Briggs (See Appendix B). Although the plume rise from point sources is usually dominated by buoyancy, plume rise due to momentum is also considered. (Merging of nearby buoyant plumes is not considered.) Stack downwash is an optional consideration. Building downwash can not be considered.

Input Data

All input data are assumed to be representative for the area being modeled. Since concentration estimates are proportional to emissions, consideration of variations may be necessary, such as diurnal or weekday vs. weekend. MPTER can utilize hourly emissions as an option. The meteorological data consisting of wind direction, wind speed, temperature, stability class, and mixing height for each hour should be representative of the region being modeled. Representativeness and possible sources of error are discussed in Section 4. Wind speed is measured at the anemometer height and then extrapolated to the stack top, using power law wind speed profiles with the exponent dependent upon stability.

Mixing Height

The entire plume is completely eddy-reflected if the effective plume height is below the mixing height. The entire plume is assumed to be within the stable layer aloft if the effective plume height is above the mixing height.

MPTER does not include calculations for the transitional phenomenon of fumigation, which is the elimination of an inversion layer containing a stabilized plume from below (which causes mixing of pollutants downward, resulting in uniform concentrations with height beneath the original plume centerline).

Removal or Depletion

Transformations of a pollutant resulting in loss of that pollutant throughout the entire depth of each plume can be approximated by MPTER. If the loss to be simulated is realistic and occurs through the whole plume

without dependence upon concentration, then this exponential loss may provide a reasonable simulation. If however, the loss mechanism is selective, the loss mechanism built into the model will not approximate the atmospheric chemistry very well. Examples of selective loss mechanisms include impaction with features on the ground surface, reactions with materials on the ground, or dependence on a given small parcel of air for concentration (requiring consideration of contributions from all sources to this parcel).

SPECIAL FEATURES

The following four features are options in MPTER.

Option 1: Terrain Adjustments

Consideration of the differences between local ground-level elevation at the stack and at the receptor is an option in MPTER. Terrain adjustment factors are entered by the user for each of the six Pasquill stability classes. These factors can be any real number between 0 and 1. Terrain adjustments can be simulated as in CRSTER by entry of 0's for all six stabilities, resulting in plumes that level off and remain at the same mean-sea-level elevation. Calculations are made by subtracting the difference, defined as the elevation of receptor ground-level minus the elevation of the source ground-level, from the effective plume height. More detail of the terrain adjustment is given in Section 4.

Of note to the user is that calculation of terrain adjustment is limited to receptors whose ground-level elevation is less than the elevation of the lowest stack top used in the run.

The terrain adjustment incorporated in MPTER is obviously simplistic. For the estimation of plume behavior in the vicinity of a single hill, the stable-plume fluid modeling studies of Snyder and Hunt (1978) have shown the importance of the Froude number, and of the location of the receptor and the plume relative to hill base and top. None of these parameters is considered here, but rather the relation of receptor and source ground-level elevations. The reader is therefore cautioned against assigning too great a significance to results obtained using the terrain adjustment option.

Option 2: Stack Downwash

A second optional feature of MPTER is considerations of stack tip downwash using the methods of Briggs. In such an analysis, a height increment is deducted from the physical stack height before determining momentum or buoyancy rise. This option primarily affects computations from stacks having small ratios of exit velocity to wind speed.

Option 3: Gradual Rise

Gradual plume rise has been made an optional feature of MPTER, because although the use of the $x^{2/3}$ dependence for rising plumes will determine average plume height with distances quite well, the plume axis is not horizontal during the rising phase. Therefore, dispersion is taking place perpendicular to the bent-over plume axis rather than vertically. The P-G dispersion parameters represent horizontal and vertical dispersion about a horizontal plume, which may not be appropriate for estimating dispersion of a rising bent-over plume. By making computations with and without the gradual plume rise, at least identification is possible of potentially high concentrations during the gradual plume rise phase. When gradual rise is not employed, computations are made using the final effective plume height.

Option 4: Buoyancy-Induced Dispersion

The final optional feature of MPTER is a method suggested by Pasquill (1976) for determining the buoyancy induced dispersion in both the horizontal and vertical directions. This feature is offered because emitted plumes undergo a certain amount of growth during the plume rise phase, due to the turbulent motions associated with the conditions of plume release and the turbulent entrainment of ambient air. Such dispersion, however will generally have little effect upon maximum concentrations unless the stack height is small compared to the plume rise.

SOURCES OF ERROR AND ACCURACY

The user would benefit appreciably if a given expected accuracy of the output could be associated with each air quality dispersion model. Unfortunately, such an association is not possible, since accuracy is dependent upon not only the model, but on the quality of the input information used in the application (including both emission information and meteorological data).

Since concentrations are directly dependent upon emissions, inaccurate emissions information is a source of error. The estimation of emission height, which is obtained through the calculation of plume rise, is dependent upon exit velocity and exit temperature. Correct specification of these parameters, as well as the physical characteristics of stack location, stack diameter, and stack height, is important. When hour-to-hour comparisons are made, hourly emission rates and exit velocities are important.

A second source of error is the representativeness of the meteorological data available for input. Generally, the greater the distance from the site to be modeled from the location at which the meteorological data are measured, the less representative the data. Slight topographic differences between two adjacent sites, however, may also cause the data at one site to be quite nonrepresentative of the other site (for example, two valleys oriented in different directions). Wind speed and direction are probably more subject to terrain-induced nonrepresentativeness than are mixing height or stability class.

Even if meteorological data from a site being modeled are considered to be climatologically representative, the extrapolation of the wind speed to the stack top of each source may still produce rather large errors on an hour-to-hour basis. Possibly the greatest single cause of inaccuracy in the model is incorrect input of the wind direction transporting the plume. Where the primary meteorological data are from near-ground measurements (< 10 m high), the taller and more buoyant a plume is, the greater the chance for wind direction inaccuracies.

In MPTER no attempt is made to extrapolate wind direction to stack top from a near-ground observation, since the deviation from the surface wind may

be either clockwise or counterclockwise. Although surface wind direction may have little effect upon long-term concentrations (such as annual average) from single plants, and may not greatly alter estimates of extreme concentration values from such a source, use of surface wind direction to determine plume transport direction usually causes large errors in hour-to-hour estimates. This potential error is a very important consideration if attempting to compare air quality measurements with the model estimates. The error is also important in considering interactions of several sources where actual wind directions are significant in determining the location of a plume from a source passing over another source.

Since the P-G stability classes are used as input and the P-G dispersion parameters are used for plume spreading, the fact should be recognized that a change of only one stability class for input will cause large changes (factors of 5 to 10) in concentration at a receptor. Such changes are especially likely if the receptor is closer to the source than the distance to maximum concentration.

Other potential causes of large inaccuracies in concentration at a given point include wind speed errors, wind speed profile power law exponents that differ from actual variations, and nonrepresentative stability classes. However, if the user is searching for maximum impact and is relocating receptors in order to find such maxima, there will be considerably less sensitivity to wind speed differences and power law exponents, but still significant sensitivity to stability class.

Not included in this model are situations where wind speed varies markedly within the hour, whereby the effective plume height will fluctuate, causing increased vertical dispersion of the plume.

Maxima even at the extreme ends of the frequency distribution will tend to have more accuracy than hour-to-hour comparisons. Longer averaging times, such as annual concentrations, will also have less error than short averaging times. Background concentrations from sources not considered in the emission inventory may become more important for the longer averaging times.

SECTION 4

BASIS FOR MPTER

As mentioned, the point source portion of RAMR is the basis of MPTER, providing much of its computer code.

GAUSSIAN MODELING

The following assumptions common to Gaussian modeling are made in MPTER.

Plume Dilution

Continuous releases of pollutants from stacks are diluted by the mean (hourly) wind speed at the stack top.

Gaussian Horizontal and Vertical Distributions

Dispersion is assumed to occur such that time-averaged plumes over 1-hour periods have Gaussian (normal) distributions perpendicular to the plume centerline in the horizontal and vertical.

Steady-State

Calculations are made as if the atmosphere had reached a steady state. Concentrations for a given hour are calculated independently of conditions for the previous hour or preceding hours.

Concentration, Sum of Contributions

The total concentration for a given hour for a particular receptor is the sum of the estimated contributions from each source.

Average Concentrations

The average concentration over periods longer than 1 hour can be determined by averaging the hourly concentrations at the receptor over the period.

INPUTS

Emission Inventories

Since, for similar meteorological conditions, the contribution from a source to the concentration at a receptor is directly proportional to emission rate from that source, emissions must be expressed accurately. Attempts should be made to include time variations occurring from many air pollution sources, such as hourly changes per day or weekdays vs weekends. For cases that have complete emissions information, creation of a system is usually necessary that will calculate and store hourly emissions for the designated period to be simulated. This task can be accomplished independently of MPTER; the model is designed to accept hourly emissions in addition to annual emission rates that establish a correspondence between emissions and exit velocity.

Meteorological Conditions Representative of Region

The meteorological input for each hour consists of a value for each of five parameters: wind direction, wind speed, temperature, stability class, and mixing height -- all of which should be representative of the entire region containing the sources and receptors. Mixing height is required only if the stability is neutral or unstable.

Wind Speeds and Directions

Wind speeds and directions should be hourly averages. (National Weather Service hourly observations are actually averages of a few minutes at the time of the observation, usually 5 to 10 minutes prior to the hour.) Input winds should be representative of the entire region being modeled.

Emissions from continuous sources are assumed to be stretched along the direction of the wind by the speed of the wind at stack top. Thus, the stronger the wind, the greater the dilution of the emitted plume. In MPTER the input wind speed is assumed representative for the input anemometer height above the ground. The wind speed u_h at the physical stack height h is calculated from:

$$u_h = u_z \, (h/z_a)^p$$

where u_z is the input wind speed for this hour, z_a is the anemometer height, and the exponent p is a function of stability. If u_h is determined to be less than 1 m s^{-1}, it is set equal to 1.

Since the P-G dispersion parameters used in MPTER have greatest validity for a surface roughness of approximately 0.03 m (Pasquill, 1976), wind speed power law exponents for each stability for this roughness are based on Irwin (1979), given in Table 1.

TABLE 1. WIND PROFILE POWER LAW EXPONENTS CORRESPONDING TO A 0.03 METER ROUGHNESS

Stability	Exponent
A	0.07
B	0.07
C	0.10
D	0.15
E	0.35
F	0.55

As stated in the previous chapter, directional shear with height is not included, which means that the direction of flow is assumed to be the same at all heights over the region. The taller the effective height of a source, the larger the expected error in direction of plume transport. Although the effects of surface friction are such that wind direction usually veers (turns clockwise) with height, the thermal effects (in response to the horizontal temperature gradient in the region) can overcome the effect of friction and cause backing (turning counterclockwise with height) instead of veering.

In the program RAMMET, which processes National Weather Service hourly observations, the wind directions (reported to the nearest 10°) are altered by a randomly generated number from 0 to 9 used to add -4° to +5° to the wind vector. An extreme overestimate of concentration

is thus prevented at a point downwind of a source during a period of steady wind, when sequential observations are from the same direction. Rather than allow the plume centerline to remain in exactly the same position for several hours, the changing wind allows for some variation of the plume centerline within the 10° sector. Although this step can in no way simulate the actual sequence of hourly events (wind direction to 1° accuracy cannot be obtained from wind direction reported to the nearest 10°), such variations can be expected to produce more representative concentrations over a period of record than those obtained using winds to only the 10° increments. (Sensitivity tests of this alteration for single sources have indicated that, where a few hours of unstable conditions are critical to producing high concentrations, the resulting concentrations are extremely sensitive to the exact sequence of random numbers used. Such a sequence might be two wind directions 1° apart versus two wind directions 9° apart. Differences of 40 to 50 percent in 24-hour concentrations from a single source have appeared in the sensitivity tests, due to the random wind direction variation alone.) Use of the most accurate wind information available for input is therefore necessary.

Mixing Height

If vertical temperature soundings are available from a representative location, they should be used with hourly surface temperatures to estimate hourly mixing heights for periods with neutral or unstable stability. If a series of National Weather Service hourly data are being processed by the program RAMMET, two values of mixing height per day are required. These are the maximum and minimum mixing heights as defined by Holzworth (1972). RAMMET provides a crude interpolation to obtain hourly mixing heights. This interpolation does not consider hourly surface temperatures.

PLUME RISE

Plume rise from point sources is calculated using the methods of Briggs (see Appendix B). Although the plume rise from point sources is usually dominated by buoyancy, plume rise due to momentum is also considered. Stack downwash can optionally be considered, though building downwash and the merging of nearby buoyant plumes cannot.

In ranking the point sources by the significance of their expected impact, only the rise due to buoyancy is processed, since it is expected to be the dominant plume rise factor. In the computation of the effect of each point source upon receptors for each simulated hour, however, all three of the above mentioned effects -- stack downwash, momentum plume rise, and buoyant plume rise -- can be considered. These computations are discussed in detail in Appendix B. Of note is that since wind speeds are not allowed to be less than 1 m s^{-1}, the stable buoyancy plume rise for calm conditions is not required and is therefore not included in the program code for MPTER.

DISPERSION PARAMETERS

The dispersion parameter values in MPTER are the P-G values (Pasquill, 1961; Gifford, 1960), which appear as graphs in Turner (1970) and in Gifford (Figure 2; 1976). These are most applicable to a surface roughness of 0.03 m (Pasquill, 1976). The subroutines used to determine these open-countryside parameter values are the same as in the UNAMAP programs PTDIS and PTMTP (EPA, 1978).

Except for stable layers aloft that inhibit vertical dispersion, the atmosphere is treated as a single layer vertically, with the same rate of vertical dispersion throughout the layer. Complete eddy reflection is assumed both from the ground and from the stable layer aloft, which is given by the mixing height.

GAUSSIAN PLUME EQUATIONS

The upwind distance x of the point source from the receptor and the crosswind distance, y, of the point source from the receptor are calculated using Equations (A1) and (A2) in Appendix A, for each source-receptor pair per simulated hour. Both dispersion parameter values σ_y and σ_z are determined as functions of this upwind distance x and stability class.

One of three equations is used to estimate concentrations under various conditions of stability and mixing height. Equation (A3) in Appendix A is used for stable conditions or for unlimited mixing; eddy reflection at the ground is assumed. For unstable or neutral conditions where vertical dispersion is so great that uniform mixing is assured beneath

an elevated inversion, Equation (A4) in Appendix A is used. Finally, for unstable or neutral conditions where vertical dispersion is still small compared to the mixing height, Equation (A5) in Appendix A is used. This equation incorporates multiple eddy reflections from the ground and the base of the stable layer aloft. Simplifications to the above equations, valid if the height of the receptor z is assumed at ground level, are incorporated into the appropriate subroutines.

OTHER CONSIDERATIONS

Fumigation

The transitional phenomenon of fumigation, defined in Section 3, is not included in calculations made by MPTER. Conditions specified for each hour are calculated as if a steady-state had been achieved for those specified conditions.

Removal or Chemical Reactions

Transformations of a pollutant resulting in its loss throughout the entire depth of each plume is accomplished by an exponential decrease with travel time from the source. The input parameter is the length of time expected for loss of 50% (half-life) of the emitted pollutant. MPTER does not have the capability to change this parameter value during a given run. If the loss to be simulated occurs throughout the whole plume, without dependence upon concentration, then the exponential loss may provide a reasonable simulation if the loss rate is realistic. However, if the loss mechanism is selective, the loss rate will not be adequately modeled. Selective loss mechanisms include impaction with features on the ground surface, reactions with materials on the ground, or dependence on the concentration in a given small parcel of air (requiring consideration of contributions from all sources to this parcel).

SPECIAL OPTIONAL FEATURES

The following four special features, mentioned in Section 3, are options in MPTER.

Option 1: Terrain Adjustments

Consideration of the differences between local ground-level elevation at the stack and at the receptor is an option in MPTER. Terrain adjustment factors are entered by the user for each of the six P-G stability classes. These factors can be any real number between 0 and 1, which allows terrain to be regarded as in CRSTER by entry of 0's for all six stabilities. Plumes that level off and remain at the same mean-sea-level elevation can thus be simulated, despite terrain influences. Calculations are made by subtracting the difference, defined as the elevation of receptor ground level minus the elevation of the source ground level, from the effective plume height.

The terrain adjustment can calculate for the elevations for which MPTER is limited using the same methods as the model Valley by entry of 1's for the first four stabilities (unstable and neutral) and 0's for the stable classes 5 and 6. The 1's allow full response of the plume to terrain factors, i.e., they simulate the plume rising over terrain features. (The entry of a 1 for the terrain adjustment factor for a given stability will compute as if the source and receptor were on a level surface.)

The equation used for the inclusion of the terrain adjustment is

$$H_A = H - \Delta E + F_T \Delta E$$

where

H_A = adjusted effective height
H = effective height
$\Delta E = E_R - E_S$
E_R = ground level elevation of receptor
E_S = ground level elevation of source
F_T = terrain adjustment factor.

Shown below are the adjusted effective heights for four values of the terrain factor:

$$H_A = H \qquad \text{for } F_T = 1$$
$$H_A = H - \Delta E \qquad \text{for } F_T = 0$$
$$H_A = H - 0.7\ \Delta E \qquad \text{for } F_T = 0.3$$
$$H_A = H - 0.1\ \Delta E \qquad \text{for } F_T = 0.9$$

The manner in which the terrain adjustment is simulated is depicted in Figure 1 for three values of the factor.

Of note to the user is that calculation of terrain adjustment is limited to receptors whose ground-level elevation is less than the elevation of the lowest stack top used in the run.

The terrain adjustment incorporated in MPTER is obviously simplistic. For the estimation of plume behavior in the vicinity of a single hill, the stable-plume fluid modeling studies of Hunt et al (1978) have shown the importance of the Froude number, and of the location of the receptor and the plume relative to hill base and top. None of these parameters is considered here, but rather the relation of the receptor and source ground level elevations. The reader is therefore cautioned against assigning too great a significance to results obtained using the terrain adjustment option.

Option 2: Stack Downwash

A second optional feature of MPTER is consideration of stack tip downwash using the methods of Briggs. In such an analysis, a height increment is deducted from the physical stack height before determining momentum or buoyancy rise. Use of this option primarily affects computations from stacks having small ratios of exit velocity to wind speed.

Option 3: Gradual Rise

Gradual plume rise determination has been made an optional feature of MPTER, because although the use of the $x^{2/3}$ dependence for rising plumes will determine average plume height with distance quite well, the plume axis is not horizontal during the rising phase. Dispersion is thus taking place perpendicular to the bent over plume axis rather than vertically. The P-G dispersion parameters represent horizontal and vertical dispersion about a horizontal plume, which may not be appropriate

for estimating dispersion about a bentover plume. By making computations with and without the gradual plume rise, at least identification is possible of potentially high concentrations during the gradual plume rise phase. When gradual rise is not employed, computations are made using the final effective plume height.

Option 4: Buoyancy-Induced Dispersion

The buoyancy-induced dispersion feature is offered because emitted plumes undergo a certain amount of growth during the plume rise phase, due to the turbulent motions associated with the conditions of plume release and the turbulent entrainment of ambient air. Pasquill (1976) suggests that this induced dispersion, σ_{zo}, can be approximated by $\Delta H/3.5$, and the effective dispersion can be determined by adding variances, i.e.,

$$\sigma_{ze} = \sqrt{\sigma_{zo}^2 + \sigma_z^2}$$

where σ_{ze} is the effective dispersion and σ_z is the dispersion due to ambient turbulence levels. At the distance of final rise and beyond, σ_{zo} is a constant using ΔH of final rise. At distances closer to the source, the ΔH used to determine σ_{zo} is itself determined using gradual rise.

Since in the initial growth phases of release the plume is nearly symmetrical about its centerline, buoyancy-induced dispersion in the horizontal direction equal to that in the vertical is used, $\sigma_{yo} = \Delta H/3.5$. This expression is combined with that for dispersion due to ambient turbulence in the same manner as is shown above for the vertical.

In general, buoyancy-induced dispersion will have little effect upon maximum concentrations unless the stack height is small compared to the plume rise. Also, it is most effective in simulating concentrations near plume centerlines close to the source, where treating the emission as a point source confines the plume to a volume much smaller than the actual plume. It should be clarified here that the buoyancy-induced dispersion close to the source is calculated using the gradual rise in MPTER, even if the gradual plume rise option is not being used to determine the effective plume height.

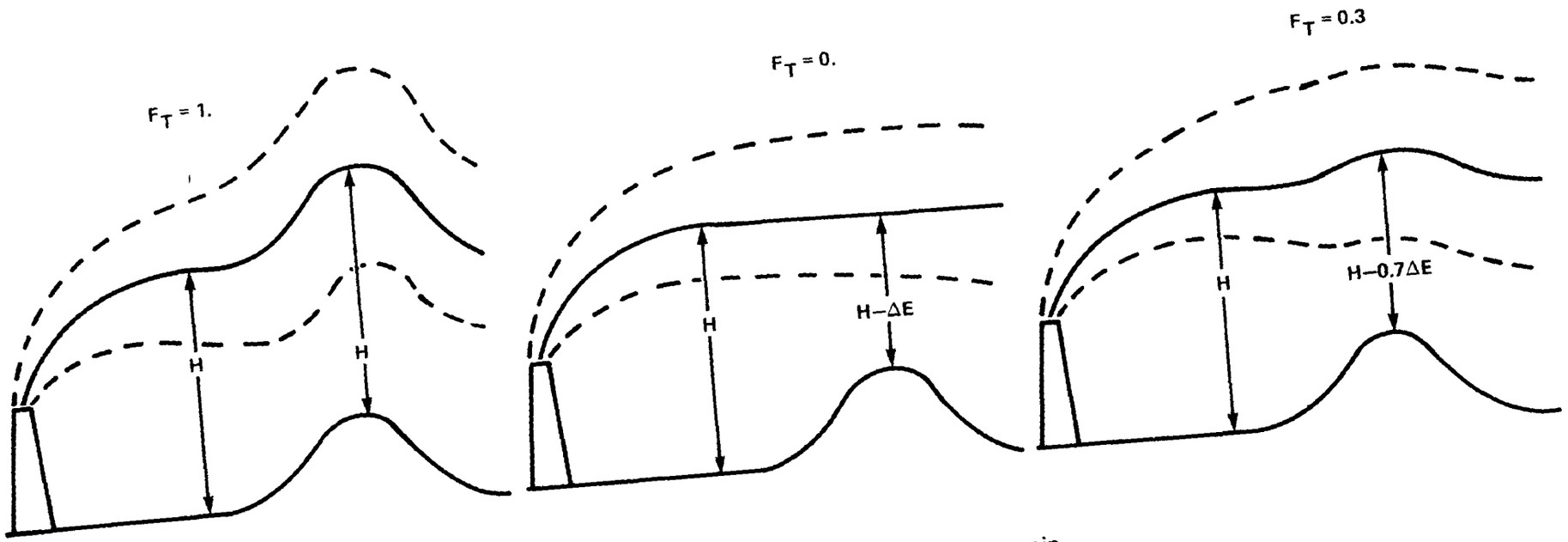

Figure 1. Adjustment of plume height due to terrain.

SECTION 5

OVERVIEW OF COMPUTER PROGRAM

With the exception that meteorological data output from RAMMET can be input, MPTER is a stand-alone program. Numerous options within MPTER allow control of its output, rather than relying upon numerous peripheral programs.

PROGRAM DESCRIPTION

A brief description of the main program and each subroutine used in MPTER is given. Some of the subroutines and various lines of code are cited directly from RAMR.

MPTER - Main Program: reads and checks input parameters, initializes variables, writes out initial information, determines significant sources, calls PTR for point source concentrations, reads and writes tapes/discs, calls OUTHR to print concentration contributions and summaries.

PTR - Subroutine called by MPTER to calculate the point source contribution to each receptor. Briggs plume rise equations are solved in this routine.

RCP - Subroutine called by PTR, RCP returns values of relative concentrations, σ_y, and σ_z.

PGYZ - Subroutine called by RCP, PGYZ calculates σ_y and σ_z for a given downwind distance and stability classification.

EXPOS - Block data containing coefficients and exponents used in determining high ground level concentrations that are used to rank the significant sources.

ANGARC - Function determining the appropriate arctan of east resultant wind component over the north resultant wind component with the resulting angle between 0° and 360°.

OUTHR - Subroutine which arranges and then prints tables of concentration. Number of tables that is output depends on the option combination specified.

RANK - Subroutine called by MPTER that ranks concentrations for four or five averaging times so that highest five concentrations are printed for each receptor.

ADDITIONAL COMMENTS

Figure 2 is an abbreviated flow diagram of MPTER showing its major loops and the relationships of the subroutines to each other and the main program.

The main program of MPTER primarily exists for input and bookkeeping; most technical calculations are performed by subroutine PTR. PTR calls subroutine RCP, which in turn obtains dispersion parameter values from subroutine PGYZ, then selects and solves the appropriate Gaussian equation. Subroutine RANK orders the highest five concentrations for each averaging time for each receptor. Subroutine OUTHR essentially provides the printed output.

The executable program for MPTER requires 48 k core on EPA's UNIVAC 1110. Table 2 gives information on the lines of code in MPTER and its subroutines.

TABLE 2. STATISTICS RELATED TO MPTER SOURCE CODE SIZE

ROUTINE	Total Lines of Code	Number of Program Statements	Number of Comment Lines	Number of Defined Variables
Main	1428	564	741	189
Block Data	38	6	13	4
ANGARC	29	22	7	4
PTR	275	120	152	83
RCP	228	119	108	48
PGYZ	85	66	14	34
RANK	58	30	25	31
OUTHR	307	191	98	45
MPTER SYSTEM	2448	1118	1158	262

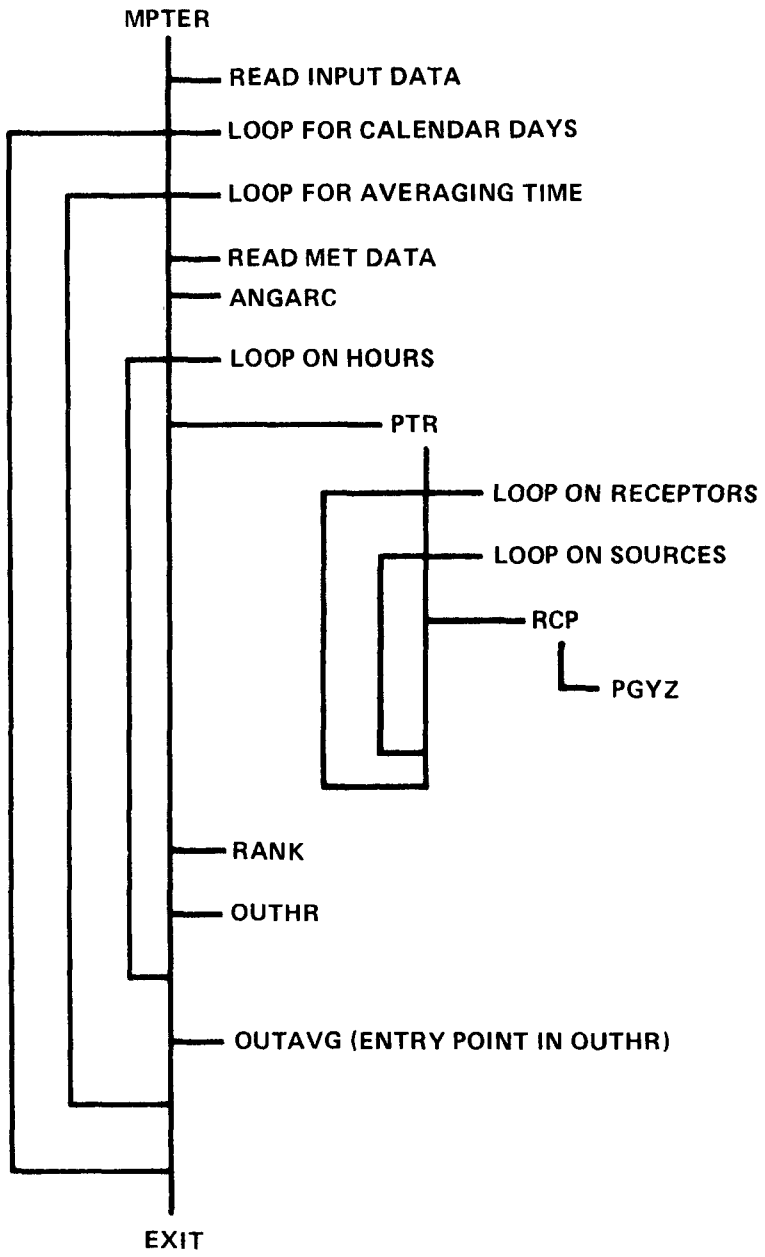

Figure 2. Subroutine structure in MPTER.

SECTION 6

DISCUSSION OF COMPUTER ASPECTS OF MPTER

A numbering system has been adopted for this section to provide a ready reference to the following discussion.

6.1 DESCRIPTION OF SOURCE CODE

Although few readers will have the need or desire to examine the source code in detail, several comments will be made about its organization. For the main program and most subroutines, explanatory statements and details on inputs are given prior to the first program statements. For the main program, a flow diagram is also given indicating the relationships of the subroutines and the major loops. Programs have been partitioned in sections when lengthy, and an outline of the sections follows the format statements.

6.2 DATA PREPARATION

Users preparing to make a run with MPTER should rely most heavily on Section 7, which details the specification of input, and Section 8, which gives runstream examples. This section discusses those elements that may require further explanation to some users and, in effect, might serve as a "troubleshooting" reference.

6.2.1 Control and Specification of Constants

6.2.1.1 Starting Date and Time --

The two-digit year and the three-digit Julian day for the start of the run are entered in the two portions of the indexed variable IDATE. The hour for the start of the run (between 1 and 24) is entered in IHSTRT. These data are used somewhat differently depending upon whether the meteorological data are entered through a file prepared by RAMMET, or upon hour-by-hour punched cards. (See discussion of this option below, 6.2.2.3.) If data are entered on cards, all three values are replaced and are relatively unimportant. If data are read from the preprocessed file, these variable values are used

to position the file so that the first meteorological data read are for the proper day.

6.2.1.2 Number of Periods, Number of Hours --

Any run of MPTER will be for a given simulated length of record from one hour to one year. The simulation is done hour-by-hour, with an optional printout of concentration estimates at each receptor for each hour (see 6.2.3.3 below). Printout of concentration estimates for one other averaging period is also available, the length in hours of which is a data entry, the variable, NAVG. The number of these averaging periods in the run is the value entered for NPER.

6.2.1.2.1 Example -- Simulation is desired of a three-day (72-hour) length of record, obtaining 24-hour averages as part of the run. NPER will equal 3, and NAVG will equal 24.

6.2.1.2.2. Example -- Simulation is desired of a one-year (not leap year) length of record, obtaining eight-hour averages as part of the run. NPER will equal 2920 (365 x 3), and NAVG will equal 8. (This example is not very practical if options are selected to obtain printed output, as tremendous amounts will be generated; see 6.2.3.3 and 6.3.2 below.)

6.2.1.3 Pollutant Indicator --

The variable IPOL (See Card Type 4, Section 7) is set on the point source card (Type 7) to either 3 for use of the emission rate in columns 29 to 36, or 4 for use of columns 39 to 44. IPOL is also used to select the proper headings "SO_2" or "PART" on output. The dispersion is treated identically for the two pollutants whose emissions are in the above fields on the point source card. Calculations may be made for pollutants other than sulfur dioxide and particulate matter by substituting their emissions in either above defined field. However, without altering the program, all headings will still read "SO_2" or "PART." Pollutants whose emissions are substituted should be relatively nonreactive, or have a loss rate describable by an exponential loss with time.

6.2.1.4 Number of Significant Sources --

The variable NSIGP is specified primarily to obtain printed information

on contributions to the concentration at each receptor from up to 25 individual sources. The value entered is the number of sources for which contributions will be printed for each hour (optional, see 6.2.3.3.3 below) and for each averaging time (again optional, see 6.2.3.3.9 below). The output is printed such that the same number of pages is required for 1 to 10 significant sources; twice this number is required for 11 to 20 significant sources, and three times this number for 21 to 25 sources. Care should thus be exercised to specify only the number of sources that is actually necessary.

6.2.1.5 Fifth Averaging Time for High-Five Concentration Table --

The value of the variable, NAV5, is significant only if the run is lengthy, say, a simulation of five days or more. If the option to produce and write the high-five table is used (see 6.2.3.3.11 below), this value will be the length in hours of an additional averaging time that will be used to list the five highest concentrations over the period of this run. Since high-five tables are already produced for 1-, 3-, 8-, and 24-hour averaging times, none of these values will be used if entered for NAV5. Also, the value entered should be evenly divisible into 24. Only 2, 4, 6, and 12 meet all these criteria. If, then, a need exists for knowing the highest five concentrations for any of these averaging times (2-, 4-, 6-, or 12), enter the proper value; otherwise enter zero.

6.2.1.6 Multiplier Constant -- CONONE

The multiplier constant CONONE is used to convert distances in the user units to distances in kilometers. These units are subsequently used for obtaining dispersion parameters and relating receptors to plume locations. If the user coordinate system is in kilometers, CONONE = 1. If user coordinate system is in miles, CONONE = 1.609344.

6.2.1.7 Multiplier Constant -- CELM

The multiplier constant CELM will convert the user height units to meters. If the elevations are reported in meters, CELM = 1; if the elevations are in feet, CELM = 0.3048. CELM is used only when terrain adjustments are made with Option 1. In this option, heights are entered for both source ground-level elevations and receptor ground-level elevations, in height units convenient to the user.

6.2.1.8 Pollutant Half-Life -- HAFL

An exponential loss of the considered pollutant with travel time is included in the model. At a travel time equal to the half-life, 50% of the pollutant will remain. Although this view of chemical or physical depletion processes is overly simplistic, it may be useful under certain circumstances. Note that the half-life is entered in seconds. If the user wants no depletion to be considered, entering zero for the half-life will cause skipping of those portions of the code calculating pollutant loss.

6.2.1.9 Values of Variables Related to Increase of Wind with Height --

The anemometer height in meters for the meteorological data used is entered on CARD TYPE 6. Six values for the wind profile power law exponent, one for each stability class, are also entered on CARD TYPE 6. In Section 4, values were given from Irwin (1979) consistent with the surface roughness that corresponds to the P-G dispersion parameter values. For computations submitted in response to regulatory requirements, certain values for this parameter may be required; the appropriate EPA regional office should be consulted prior to performing calculations.

If Option 1 is employed to make terrain adjustments, six terrain adjustment factor values (one for each stability class) that are read in on CARD TYPE 6 are used in subsequent computations (see 6.2.3.1.1 below). The values must be real numbers between 0 and 1.

6.2.2 Input Data

Comments on emission, receptor, and meteorological data are made here.

6.2.2.1 Emission Data -- (See CARD TYPE 7)

The alphanumeric name and the eight variables of point source information are the same as used in most dispersion models. Only one of the two emission rates will be used in a given run (see 6.2.1.3 above). If only one pollutant is of interest, the other field may be left blank. If Option 6 to enter hourly emission rates (see 6.2.3.2.2 below) is not used, the emission rates should provide the best estimate of the emission for the length of record being run. If maximum or design emissions are used, concentration estimates may be somewhat larger than actual concentrations. However, Irwin and

Cope (1979) have demonstrated that maximum operating conditions may not necessarily produce the highest modeled concentrations. If the option is exercised to input hourly emissions from a separate file (see 6.2.3.2.2 below), the input emission on each source card can be either average (normal) emission or maximum design, with the exit velocity appropriate for that condition. In MPTER, the hourly emissions input are compared with the emissions initially input on CARD TYPE 7 and that comparison is used to scale the exit velocity upwards if the hourly emission is greater, or downwards if the hourly emission is less.

In MPTER, no provision exists for altering the stack gas temperature. The value entered on the point source card is used throughout, even if hourly emissions are entered. Since Irwin and Cope (1979) have shown that variation in exit temperature is a sensitive parameter for maximum concentration, and if sufficiently detailed information is available for estimating hourly stack gas temperatures, we would recommend alteration of the model to accept hourly stack gas temperature. Along this same line, with at least the pollutant SO_2, a constant scaling does not necessarily exist between emission rate and exit velocity due to changes in sulfur content of the fuel (and also heat content of the fuel). Here again, alteration of the model may be desirable so that the three parameters (emissions, stack gas temperature, and exit velocity) are all entered hourly. Under the present procedure, only emissions are entered hourly; exit temperature is left constant throughout the run, and exit velocity is scaled by emission rate.

If Option 1 for terrain adjustments is employed, the ground-level elevation of each point source is an element of the point source card, CARD TYPE 7, and is input in units chosen as convenient by the user (see 6.2.1.6 above).

6.2.2.2 Receptor Data -- (See CARD TYPES 10, 11, and 12)

If Option 8 is employed (see below), polar coordinate receptor positions are generated internally in MPTER about a specified location for one to five radial distances. Thirty-six receptors are generated for each distance. If all five distances are used, 180 receptors are generated -- the maximum number of receptors allowed in MPTER. Note that the distances (and also the center

of the polar coordinate grid) are specified in user units. If Option 8 is employed to generate the polar coordinate receptors and Option 1 is employed to include terrain adjustments, the ground-level elevations of these receptors must be entered using CARD TYPE 11. A separate card is used for each azimuth, with from one to five elevations per card (see 6.2.3.1.1 below).

An alternative method of entering receptors into an MPTER run is to specify receptor locations (again, in user units) on individual cards for each receptor (CARD TYPE 12).

Note that the receptor height above local ground level must be in meters. Although in many applications the height will be zero (receptor at the ground), other situations may occur where determining concentrations above the ground is desirable, such as at plume centerline. Although no restriction on this height exists, careful thought should be given to the assignment of receptor heights far removed from the ground surface. A cautioning statement in subroutine RCP will be generated if both the effective plume height and the receptor height are above the mixing height. This may cause many useless lines of output.

6.2.2.2.1 Receptor ground-level elevation -- Values for this parameter are required only if Option 1 to employ terrain adjustments is used (see 6.2.3.1.1 below). Note that elevations are entered in the user height units. Estimations in MPTER are limited to receptors whose ground-level elevation is lower than the lowest elevation of all the stack tops in the run. If numerous sources and receptors exist, it is not necessarily easy to inspect the input data to see if this criterion is met. A receptor whose elevation is above this low stack top value will not have a concentration estimate calculated; instead, the concentration will be set to an extremely high value that will cause asterisks to appear on the output for this receptor (at least on EPA's UNIVAC 1110). Also, double asterisks will appear beside the receptor numbers in the initial output listing receptors. Single asterisks will appear beside receptor numbers whose elevations are below the ground-level elevation of the source having the highest ground-level elevation. Caution should be used in interpretation of these concentrations.

Users who want to make a run for a significant length of simulated time are thus advised that when employing the terrain adjustment option, they must first make a run for a short period (one hour -- meteorological data are unimportant) to see if double asterisks appear on the receptor list. Then these receptors should be eliminated before making the long-term run.

6.2.2.3 Meteorological Data -- (See CARD TYPE 14)

Meteorological data files prepared by the CRSTER Preprocessor or by the similar program from the RAM system, RAMMET, are acceptable by MPTER. Proper running of these preprocessor programs results in a one-year period of record with one record for each calendar day. Twenty-four values of each of the following parameters are contained in this record: Pasquill-Gifford Stability Class, wind speed (at anemometer height), ambient air temperature, wind flow vector (wind direction $\pm$ 180°), and mixing height. The user should be reminded that if using either of these programs to process meteorological data, a complete set of data must be input to either program. Any "holes" in the data set must be filled by the user. In using this data for input to MPTER one record is read for each simulated day. If making a run for a period of record of less than a year and starting after Day 001 (January 1st), MPTER will skip records to arrive at the proper day based upon the variable IDATE(2) on CARD 4 (see 6.2.1.4 above).

If using meteorological data from the preprocessed file, Option 5 will be zero. Also, the four variables on CARD TYPE 8 are to be read in and will be checked against the data on the input file.

Alternatively, when employing Option 5, meteorological data is read from punched cards (see CARD TYPE 14) with one card for each simulated hour in the run. The wind speed on this card again is for the anemometer height. The wind direction is the direction from which the wind blows.

6.2.3 Options

There are four technical options, four input options, 11 print options, and five other options either for control or for output to files. To employ the particular option, a 1 is entered as input to the element of the array IOPT with the same number as the option number. Otherwise, a zero is

entered for this variable. Values of 0 or 1 are entered for all options on CARD TYPE 5.

6.2.3.1 Technical Options --

6.2.3.1.1 Option 1: Terrain Adjustment -- Since terrain adjustment is a major feature of this model, this is Option 1. Terrain adjustment is made if the option is employed, that is IOPT(1) = 1. The use of this option requires input of source ground-level elevation on CARD TYPE 7 (see 6.2.2.1 above) and receptor ground-level elevation on CARD TYPE 12 (see 6.2.2.1 above). If Option 8 for generation of polar coordinate receptors is used, CARD TYPE 11 with elevations for the polar coordinate receptors are also read (one card for each of 36 azimuths). Also, this option requires that six terrain adjustment factors, one for each stability class be entered on CARD TYPE 6. These values must be real numbers between zero and one. This allows the model to be used for research with various values. Of note to the user is that if the run results are to be submitted in response to regulatory requirements, certain values may be required for these parameters. If zeros are entered for all six stabilities, this will have the effect of doing the terrain adjustment the same as done by CRSTER. If ones are entered for all six stabilities the concentration estimates will be the same as if terrain is not considered (the option not employed) for 1's will cause the plumes to rise fully over the terrain which is equivalent to elevated plumes over a level surface. Therefore where use of 1's for all stabilities is contemplated, the use of the terrain option is unnecessary.

6.2.3.1.2 Option 2: No Stack Downwash -- With IOPT(2) = 0, stack downwash is used if applicable using the procedure given in Appendix B. With IOPT(2) = 1, stack downwash is not estimated.

6.2.3.1.3 Option 3: No Gradual Plume Rise -- With IOPT(3) = 0, gradual plume rise from stack top to the distance of final rise is determined using the procedures in Appendix B. With IOPT(3) = 1, only the final plume height is used for effective height.

6.2.3.1.4 Option 4: Use Buoyancy-Induced Dispersion -- With IOPT(4) = 0, sources are treated as point sources. With IOPT(4) = 1, buoyancy-induced plume size is determined in both the horizontal and vertical dependent on

plume rise using the techniques suggested by Pasquill (see Section 4). It should be pointed out that even if Option 3 is employed, resulting in use of only the final plume height for effective height of emission, the gradual plume rise is determined internally to determine the buoyancy-induced plume size. (It would not be the least bit appropriate to use the final plume rise to determine the initial size close to the stack.)

6.2.3.2 Input Options --

For the four following input options, specific action is taken if the value of 1 is entered.

6.2.3.2.1 Option 5: Met. Data on Cards -- If IOPT(5) = 1, met data are entered on cards with one card for each simulated hour (see 6.2.2.3 above). If option 5 is 0, meteorological data is entered using records on unit 11. The specification of the records on this input file are given in the next section.

6.2.3.2.2 Option 6: Read Hourly Emissions -- If IOPT(6) = 1, hourly emissions for each point source are read from unit 15 in the main program, then are compared with the emissions input on the point source card for scaling the exit velocity (see 6.2.2.1). Subroutine PTR performs these tasks; Section 7 specifies the records on this input file.

6.2.3.2.3 Option 7: Specify Significant Sources -- The number of significant sources, given as NSIGP on Card 4, is ranked when the emissions data are processed according to expected ground-level impact under B stability, with a wind at stack top of 3 m s^{-1}. This option can be employed if the contribution of a source is sought for a subsequent run that is outside this list or too far down it to be included among the significant sources, NSIGP on Card 4 (see 6.2.1.5 above). When IOPT(7) = 1, an additional input card is read (CARD TYPE 9) that indicates how many sources will be specified (NPT), then gives their source numbers (the array MPS) corresponding to the source numbers in the printed output list. Source numbers are assigned according to the order of the source input. For example, consider an application having 30 sources, where a run is deemed useful that shows contributions from 10 sources (NSIGP on CARD 4 will be set to 10). Specifically, the contributions from sources 7 and 22 are desired. The 12 most significant of the 25 sources, in order are: 3, 8, 23, 11, 2, 15, 4, 27, 1, 5, 28, and 14. Since 7 and 22 are

not among these 12, and further are not in the first 10, Option 7 is set equal to 1, and CARD TYPE 9 contains 2 for NPT and the two numbers 7 and 22 for the two entries to MPS. Sources 7 and 22 will occupy the first two columns in the contribution table. The program will fill the other eight positions of the significant source list (to total 10) with the first eight sources of the list of 25, i.e., 3, 8, 23, 11, 2, 15, 4 and 27.

6.2.3.2.4 Option 8: Input Radial Distances and Generate Polar Coordinate Receptors -- For the user's convenience in making computations at an array of receptors that are positioned about a specific source or some other point, Option 8 provides for reading an additional input card (CARD TYPE 10) with from one to five non-zero distances in user units. Additionally, the east and north coordinates (also in user units) of a center position are provided. The program generates the east and north coordinates of each receptor in a polar coordinate array, generating 36 receptors for each non-zero distance (one for each 10 degrees of azimuth). A five-value distance array is read from the card with distances entered for the number of distances desired. Zeros are added to fill the array. For example, to produce a receptor array with two distances, two distances and three zeros are entered. This step will generate 72 receptors (36 for each distance). Putting non-zero values for all five distances will generate 180 receptors, which is the maximum number that MPTER can compute. Thus using Option 8 in this manner will not allow the input of any additional receptor cards with positions specified by the user.

Of note to the user is that if both Option 8 and Option 1 for terrain adjustment are used, elevations of the polar coordinate receptors must be read in using CARD TYPE 11. These can best be obtained by drawing 36 radials from the designated center point on a topographical map, and drawing circles for each distance. Then the elevations can be determined from the map by reading elevations outward from the center, starting with the 10-degree azimuth radial. If all five distances are used so that 180 receptors are generated, a card with ENDREC in Columns 1-6 must be read following CARD TYPE 10 (or the last card of CARD TYPE 11 if used).

6.2.3.3 Printed Output Options --

When employed, the eleven printed output options will cause portions of the computer code to be skipped. A normal run will generally use at least some of these options.

6.2.3.3.1 Option 9: Delete Emissions with Height Table -- Option 9 will be left zero only if it is desirable to look at the distribution of physical stack heights of the sources being modeled. This table is printed at the end of Section E in the main program, and is shown in Example 4.

6.2.3.3.2 Option 10: Delete Averaging Time Meteorological Summary -- Option 10 will be left zero when the user desires to obtain a listing of the hourly meteorological data for each simulated averaging time, and the resultant or average conditions for that period. If the run is for a long period of record, such as a year, a similar record more than likely has already been made for the meteorological data. One output page for each averaging time will be required; Section N of the main program prints this table.

6.2.3.3.3 Option 11: Delete Hourly Contributions -- Option 11 will be left zero only when the value of NSIGP on CARD TYPE 4 is one or more, when the user wishes to examine on an hour-by-hour basis the contributions to the receptor concentrations of significant sources. If IOPT(11) = 1, Sections B, C, D, and E of Subroutine OUTHR are skipped.

6.2.3.3.4 Option 12: Delete Meteorological Data on Hourly Contributions -- Option 12 will be left zero only when the meteorological data for the hour should be listed with the contribution (see Example 2). If IOPT(12) = 1, Section C in Subroutine OUTHR is skipped.

6.2.3.3.5 Option 13: Delete Final Plume Height and Distance to Final Rise on Hourly Contributions -- Option 13 will be left zero only when the hourly calculated final plume height and the distance to final rise is desired with the hourly contributions. Information on effective plume height of specific sources can be invaluable in trying to determine distance to maximum concentrations, or in trying to arrange receptors vertically. If IOPT(13) = 1, Section D in Subroutine OUTHR is skipped.

6.2.3.3.6 Option 14: Delete Hourly Summary -- Option 14 will be left zero when it is desirable to have the hourly summary printed for each hour in the run. The hourly summary contains the sum of the contributions to the concentration at each receptor. In addition to this sum, two components of the concentration are given: that due to all significant sources, and that due to all other sources, (i.e., those not considered in the sources selected as significant for this run). If IOPT(14) = 1, Sections F, G, H, and I in Subroutine OUTHR are skipped.

6.2.3.3.7 Option 15: Delete Meteorological Data on Hourly Summary -- Option 15 will be left zero when the meteorological data are required for the hour printed with the hourly summary. This information is the same as discussed in 6.2.3.3.4 above, Option 12. Seldom should the meteorological data be needed on both of these outputs. If IOPT(15) = 1, Section G in Subroutine OUTHR is skipped.

6.2.3.3.8 Option 16: Delete Final Plume Height and Distance to Final Rise on Hourly Summary -- Option 16 will be left zero when the final plume height and distance to final rise are needed on the hourly summary. This information is the same as on the contributions (see 6.2.3.3.5 above), and should not be needed on both outputs. If IOPT(16) = 1, Section H in Subroutine OUTHR is skipped.

6.2.3.3.9 Option 17: Delete Averaging-Time Contributions -- Option 17 will be left zero when examination of the contributions from the significant sources is desired for each averaging time. If IOTP(17) = 1, Section J in Subroutine OUTHR is skipped.

6.2.3.3.10 Option 18: Delete Averaging-Time Summary -- Option 18 will be left zero when printout of the averaging-time summary is needed. This table is similar to the hourly summary (see 6.2.3.3.6 above), except for the simulation period covered. If averaging over these hours would be meaningless due to a run being made for a number of independent hourly periods, Options 17 and 18 should both be set to 1. If IOPT(18) = 1, Section K in Subroutine OUTHR is skipped.

6.2.3.3.11 Option 19: Delete Average Concentrations and High-Five Table -- Option 19 will be left zero in order to produce average concentrations

for the duration of the run and to list the five highest concentrations for four or five averaging times. (See discussion concerning the variable NAV5 in 6.2.1.5 above.) For this table to be useful, at least two periods of the concentration averaging period should be run. Any run less than 5 days will have some zeros in the output table, since one output will be the highest five concentrations for the 24-hour averaging time. If IOPT(19) = 1, Sections Q and S in MPTER will be skipped.

6.2.3.4 Other Control and Output Options --

The five other control and output options cause portions of the code to be executed only if the option is employed.

6.2.3.4.1 Option 20: Run as Part of a Segmented Long Run -- Option 20 is used to segment a run into several pieces. CARD TYPE 13 is read and appropriate input and output files are set to the correct record. Also, data for the average concentration and high-five are read from the previous segment and written for the next segment using unit 14.

To properly break a large run into segments, the number of averaging periods, NPER on CARD 4, should be set to the total number for the sum of the segments. This step will allow the variable LDRUN, from CARD TYPE 13, to control the program flow and temporarily store the proper data on unit 14. For example, to break a one-year run into two segments, let NPER equal 366, and NAVG equal 24 for both segments. On Card 13 for the first segment, IDAY is zero and LDRUN can be 180; for the second segment, IDAY is 180 and LDRUN is 366 (for a leap year). The proper date and time should be entered on Card 4 for each run.

6.2.3.4.2 Option 21: Write Partial Concentrations to Disk -- Option 21 provides for all concentration contributions from each source to each receptor for each hour using unit 10. One record is written in Section PTR.F for each receptor for each hour; thus a large number of records will be written even for a relatively short length of simulated period. The specifications for these records are given in Section 7. The user should proceed with knowledge of the amount of data generated before using this option.

6.2.3.4.3 Option 22: Write Hourly Concentrations to Disk -- Option 22 provides for writing a record once each hour on unit 12 containing the concentration for each receptor. This option is written at the end of Section P of MPTER. The specifications for these records are given in Section 7.

6.2.3.4.4 Option 23: Write Average Concentrations to Disk -- Option 23 provides for writing a record once each averaging period on unit 13, containing the concentration for each receptor. This option is written at the end of Section OUTHR.K; specifications for these records are given in Section 7.

6.2.3.4.5 Option 24: Punch Average Concentrations on Cards -- Option 24 provides for punching cards at the end of each averaging period of the concentration for each receptor for the averaging time (one card per receptor). Unit 1 is used for punching. The format for these output cards is given in Section 7.

6.3 RUNNING COSTS AND OUTPUT VOLUME

6.3.1 Running Costs

The examples to be shown in Section 8 will give the user some idea of running costs. Below are examples of time and costs for runs on EPA's UNIVAC 1110.

Example 1	1.178^s	8¢
Example 2	1.497^s - 1.510^s each	10 - 11¢
Example 3	16^m 44.674^s	$61.19
Example 4	9.127^s	61¢

Running costs are proportional to the number of hours simulated, the number of sources, and the number of receptors. Since computations are made for each source-receptor pair, running time will increase somewhat according to: (sources) x (receptors).

6.3.2 Output Volume

Depending on the options employed, MPTER is capable of generating a tremendous quantity of printed output. The output will be at a maximum unless deletions are made using options 9 to 19. Table 3 will assist the user in estimating the amount of output.

TABLE 3. MPTER OUTPUT VOLUME

Output	No. of lines	No. of pages
Mandatory Output on All Runs		3 - 6
Emissions with Height Table		1/2
Met. Data for Avg. Period		1
Met. Data on Hourly Contributions or Hourly Summaries	5	
Final Plume Rise and Distance to Final Rise		
less than 10 sources	3	
250 sources	51	
(1 line plus two lines for each 10 sources or fraction of 10 sources)		
Hourly Contributions (for each hour)		
for 1 to 10 significant sources		
about 30 receptors		1
about 31 to 83 receptors		2
about 84 to 136 receptors		3
about 137 to 180 receptors		4
for 11 to 20 significant sources	twice that for 1 to 10	
for 21 to 25 significant sources	three times that for 1 to 10	
Hourly Summaries (for each hour)		
(See above for number of lines to add for met. data and for plume data.)		
about 45 receptors		1
about 46 to 98 receptors		2
about 99 to 151 receptors		3
about 152 to 180 receptors		4
Averaging Period Contributions (for each period)		
for 1 to 10 significant sources		
46 receptors		1
47 to 99 receptors		2
100 to 152 receptors		3
153 to 180 receptors		4
for 11 to 20 significant sources	twice that for 1 to 10	
for 20 to 25 significant sources	three times that for 1 to 10	
Averaging Period Summary (for each period)		
44 receptors		1
45 to 78 receptors		2
99 to 151 receptors		3
152 to 180 receptors		4
Average Concentrations and High-Five Table		
for 180 receptors		17
(Proportionately less for less than 180 receptors.)		

Consider the following example run and the estimate of maximum output. Five averaging periods of 24 hours each are to be simulated, using 250 sources and 180 receptors (both of these are maximum values). The number of significant sources is 25, also the maximum. Table 4 gives an estimate of the number of pages of output.

TABLE 4. MAXIMUM OUTPUT: 5-DAY RUN FOR 250 SOURCES AND 180 RECEPTORS.

Output	No. of Pages
Mandatory output (because of number of sources and receptors)	11
Emissions with Height Table (1/2 page, included above)	
Met. Data Summary for Avg. Period	5
Hourly Contributions with Met. Data and Plume Height Info. (an additional page is added because of 51 lines of plume info.) 13 pages x 5 periods x 24 hours =	1560
Hourly Summaries, 4 pages x 5 periods x 24 hours =	480
Averaging Period Contributions, 12 pages x 5 periods =	60
Averaging Period Summaries, 4 pages x 5 periods =	20
High-Five Table	17
Total	2153

Obviously most users will want to delete much of this output. Considering that the above proposed run is only of 5 days duration, the user must be very generous in the use of options to delete unneeded output.

6.4 ERROR MESSAGES AND REMEDIAL ACTION

Fourteen error messages can be generated by MPTER. Each of these will terminate program execution with STOP.

6.4.1 Error Message 1

The first error message occurs if the user specifies the number of sources to be significant as more than 25 on CARD 4. The following error message is printed:

> NSIGP (THE NO. OF SIGNF POINT SOURCES) WAS FOUND TO EXCEED THE LIMIT (25). USER TRIED TO INPUT xxx SOURCES ********* EXECUTION TERMINATED **********

where xxx is the value put on CARD 4 for the variable NSIGP.

The corrective action is to change the value of NSIGP on CARD 4 to a value of 25 or less.

6.4.2 Error Message 2

The second error message occurs for situations using Option 1. If any of the six values of the terrain adjustment factor are outside the acceptable range of between 0. and 1., the following error message is printed:

> CONTER VALUE IS OUTSIDE OF RANGE: ZERO TO ONE. EXECUTION TERMINATED.

The corrective action is to change the offending value(s) of CONTER (input values that were entered on Card 6 are printed prior to the error statement).

6.4.3 Error Message 3

The third error message occurs if the user attempts to input more than the maximum number of point sources (250), or forgets to place an 'ENDPOINT' card following the last point source. The following error message is printed:

> USER TRIED TO INPUT MORE THAN 250 POINT SOURCES. THIS GOES BEYOND THE CURRENT PROGRAM DIMENSIONS.

The corrective action is to reduce the number of sources to 250 and/or to put the 'ENDPOINT' card behind the 250th source.

6.4.4 Error Message 4

The fourth error message is printed if no sources were specified:

```
NPT = xxx I.E., EQUAL OR LESS THAN ZERO RUN TERMINATED ----
CHECK INPUT DATA
```

where xxx will be zero.

The corrective action is to revise the run stream so that it includes data for at least one point source.

6.4.5 Error Message 5

The fifth error message is written when Option 7 is employed by the user to specify numbers of sources he wants to be considered as significant, but he specifies a number larger than the number of significant sources allowed for the run (NSIGP). The following error message is printed:

```
***ERROR --- USER TRIED TO SPECIFY xxx SIGNIFICANT SOURCES,
BUT IS ONLY ALLOWING yyy TOTAL SIGNIFICANT SOURCES IN THIS RUN.
*** RUN TERMINATED - CHECK INPUT DATA! ***
```

where xxx is the value of INPT from CARD TYPE 8 and yyy is the value of NSIGP from CARD 4.

The corrective action is to increase NSIGP (not to exceed 25) <u>or</u> to decrease the value of INPT to equal or less than NSIGP, and to eliminate all but that number (INPT) of sources on CARD TYPE 8 following the value of INPT.

6.4.6 Error Message 6

The sixth error message is written when Option 5 is zero, requiring meteorological data to be read from a tape or disk file. If the surface station identification and the year read from CARD TYPE 9 do not match those given in the first record on the file, the following error message is printed:

```
SURFACE DATA IDENTIFIERS READ INTO MODEL (STATION = xxxxx, YEAR = yy)
DO NOT AGREE WITH THE PREPROCESSOR OUTPUT FILE (STATION = wwwww,
YEAR = zz)
```

where xxxxx and yy are read in on CARD TYPE 9, and wwwww and zz are from the file.

Corrective action is to substitute the proper desired file or to change the identifiers on the card to match the data. The user should be careful to use the most representative meteorological data available.

6.4.7 Error Message 7

The seventh error message is similar to message six, occurring when meteorological data are read from a file when Option 5 is zero. If the upper air station identification for the station used to calculate mixing height and the year read from CARD TYPE 9 do not match those given in the first record on the file, the following error message is printed:

> MIXING HEIGHT IDENTIFIERS READ INTO MODEL (STATION = xxxxx, YEAR = yy) DO NOT AGREE WITH THE PREPROCESSOR OUTPUT FILE (STATION = wwwww, YEAR = zz)

Corrective action is to substitute the proper desired file or to change the identifiers on the card to match the data. The user should be careful to use the most representative meteorological data available.

6.4.8 Error Message 8

The eighth error message occurs if both Option 1 for terrain and Option 8 to generate receptors equal 1 and the 36 elevation cards (TYPE 11) are out of sequence, or have been punched incorrectly. If the numbers 1 through 36 on the cards do not match the internally generated numbers 1 through 36, the following message is printed:

> WRONG RECEPTOR ELEVATION CARD READ. READ CARD FOR AZIMUTH xxx SHOULD HAVE BEEN yyy.

The corrective action is to check the sequencing and formatting of all TYPE 11 cards and to correct any errors.

6.4.9 Error Message 9

The ninth error message occurs if the user attempts to enter more than 180 receptors or failed to place an 'ENDREC' card after the 180th receptor was generated or read. In other words, the user failed to put this card

behind the last TYPE 11 card if 180 polar coordinate receptors were generated, or behind the CARD TYPE 12 which generates the 180th receptor. The following message is printed:

**** USER EITHER TRIED TO INPUT MORE THAN 180 RECEPTORS OR ENDREC WAS NOT PLACED AFTER THE LAST RECEPTOR CARD **** ******** EXECUTION TERMINATED *******

The corrective action is to reduce the number of receptors to no more than 180 and to place an ENDREC card at the proper place.

6.4.10 Error Message 10

The tenth error message occurs if no receptors have been generated or read in:

NO RECEPTORS HAVE BEEN CHOSEN

The corrective action is to restructure the input runstream so that receptors are generated or read.

6.4.11 Error Message 11

The eleventh error message occurs if Option 20 to segment a run is used, and in the second or greater segment of such a run, the number of days previously processed (IDAY, read from CARD TYPE 13) does not match the number of days written to an external file after processing. The following message is printed:

*** DAYS DO NOT MATCH, IDAY = xxx, IDAYS = yyyy

The corrective action is to replace CARD TYPE 13 with the proper value of IDAY to match the information from the previous run.

6.4.12 Error Message 12

The twelth error message occurs if Option 5 is zero, requiring meteorological data to be read from a file. If either the year or Julian day in the program execution does not match the year or day on the record on the meteorological data, the following message is printed:

DATE ON MET. TAPE, yyddd, DOES NOT MATCH INTERNAL DATE, wwzzz

where yyddd are the year and day from the meteorological file and wwzzz are the year and day generated in the execution of the program.

The corrective action is to determine the cause and correct the runstream, or the meteorological file, or both.

6.4.13 Error Message 13

The thirteenth error message occurs if a value for the start hour of a period becomes zero or negative. The following message is printed:

HOUR xxx IS NOT PERMITTED. HOURS MUST BE DEFINED BETWEEN 1 and 24

where xxx is the value of IHSTRT.

The corrective action is to check the value of IHSTRT in CARD 4.

6.4.14 Error Message 14

The fourteenth error message occurs using Option 6 to read hourly emissions. If the combined year, Julian day and hour from the internal execution of the program do not match the similar date time group from the file, the following message is printed.

DATE BEING PROCESSED IS = byydddhr DATE OF HOURLY POINT EMISSION RECORD IS = bxxeeeff *** PLEASE CHECK EMISSION RECORDS***

The corrective action is to check the emission records or determine the reason why the internal date is in error.

SECTION 7

INPUT CARD, INPUT FILE, AND OUTPUT FILE SPECIFICATIONS

CARD INPUT

Tables 5 through 16 list the card input necessary to execute MPTER. Since some card types are read in UNIVAC's free format, individual values on a card must be separated either by a comma or a space. Up to 250 point sources and 180 receptor cards are allowed; more than this number will result in runstream termination. Meteorology data can be input on cards or through a preprocessed file of the same type used for RAM and CRSTER. Hourly emissions can also be read in as an option.

The ordering of the cards in the input deck is shown in Figure 3. The systems flow for MPTER is shown in Figure 4.

TABLE 5. MPTER CARD TYPE 1, 2, and 3 - TITLE (3 cards)

Variable	Format	Description	Units
LINE1	20A4	80 alphanumeric characters for heading	-
LINE2	20A4	80 alphanumeric characters for heading	-
LINE3	20A4	80 alphanumeric characters for heading	-

TABLE 6. MPTER CARD 4 - CONTROL AND CONSTANTS (1 card)

Variable	Format	Description	Units
IDATE(1)	Free	2 digit year (see 6.2.1.4)	-
IDATE(2)	Format	starting Julian day for this run	-
IHSTRT		starting hour for this run	-
NPER		number of averaging periods to be run (see 6.2.1.2)	-
NAVG		number of hrs in an averaging period	-
IPOL		pollutant indicator: 3 = SO_2 4 = Suspended Particulates (see 6.2.1.1)	-
NSIGP		number of significant point sources, max = 25. (see 6.2.1.5)	-
NAV5		number of hrs in the user specified period for which a high-five concentration table is generated. (see 6.2.1.3)	-
CONONE		multiplier constant, user units to km (see 6.2.1.5)	-
CELM		multiplier constant, user ht units to m (see 6.2.1.6)	-
HAFL		pollutant half-life (see 6.2.1.7)	seconds

TABLE 7. MPTER CARD 5 - OPTIONS (1 card) - integer values: 0 or 1

Variable	Format	Description
		TECHNICAL OPTIONS (see 6.2.3.1)
IOPT(1)	Free	Use Terrain Adjustments
IOPT(2)	Format	No Stack Downwash
IOPT(3)		No Gradual Plume Rise
IOPT(4)		Include Buoyancy Induced Dispersion
		INPUT OPTIONS (see 6.2.3.2)
IOPT(5)		Met. Data on Cards
IOPT(6)		Read Hourly Emissions
IOPT(7)		Specify Significant Sources
IOPT(8)		Input Radial Distances and Generate Polar Coordinate Receptors
		PRINTED OUTPUT OPTIONS (see 6.2.3.3)
IOPT(9)		Delete Emissions With Height Table
IOPT(10)		Delete Resultant Met. Data Summary for Averaging Period
IOPT(11)		Delete Hourly Contributions
IOPT(12)		Delete Met. Data on Hourly Contributions
IOPT(13)		Delete Final Plume Height and Distance to Final Rise on Hourly Contributions
IOPT(14)		Delete Hourly Summary
IOPT(15)		Delete Met. Data on Hourly Summary
IOPT(16)		Delete Final Plume Height and Distance to Final Rise on Hourly Summary
IOPT(17)		Delete Averaging-Period Contributions
IOPT(18)		Delete Averaging-Period Summary
IOPT(19)		Delete Average Concentrations and High-Five Table
		OTHER CONTROL AND OUTPUT OPTIONS (see 6.2.3.4)
IOPT(20)		Run is Part of a Segmented Run
IOPT(21)		Write Partial Concentrations to Disk or Tape
IOPT(22)		Write Hourly Concentrations to Disk or Tape
IOPT(23)		Write Averaging Period Concentrations to Disk or Tape
IOPT(24)		Punch Averaging Period Concentrations on Cards

TABLE 8. MPTER CARD 6 - WIND AND TERRAIN (1 card)

Variable	Format	Description	Units
HANE	Free	anemometer height	meters
PL(I),I=1,6	Format	wind increase with height exponents for each stability class (see 6.2.1.8)	-
CONTER(I),I=1,6		terrain adjustment factors for each stability class (real numbers from 0 to 1)	-

TABLE 9. MPTER CARD TYPE 7 - POINT SOURCE* (up to 250 cards) (see 6.2.2.1)

Variable	Format	Description	Units
RNAME	2A6	12 alphanumeric characters for source identification	-
SOURCE(1,NPT)	F8.2	east coordinate of point source	user units
SOURCE(2,NPT)	F8.2	north coordinate of point source	user units
SOURCE(3,NPT)	F8.2	sulfur dioxide emission rate	$g\ s^{-1}$
SOURCE(4,NPT)	F8.2	particulate emission rate	$g\ s^{-1}$
SOURCE(5,NPT)	F8.2	physical stack height	meters
SOURCE(6,NPT)	F8.2	stack gas temperature	Kelvin
SOURCE(7,NPT)	F8.2	stack inside diameter	meters
SOURCE(8,NPT)	F8.2	stack gas exit velocity	$m\ s^{-1}$
ELP(NPT)	F4.0	source ground-level elevation	user ht units

*Card with ENDPOINTS in columns 1-9 is read in after the last point source card.

TABLE 10. MPTER CARD TYPE 8 - MET. DATA IDENTIFIERS (used with option 5 = 0)

Variable	Format	Description	Units
ISFCD	Free	sfc met station identifier	5 digits
ISFCYR	Format	year of sfc met data	2 digits
IMXD		upper-air station identifier	5 digits
IMXYR		year of mixing-height data	2 digits

TABLE 11. MPTER CARD TYPE 9 - SPECIFIED SIGNIFICANT SOURCES (1 card)
(used with option 7 = 1)

Variable	Format	Description	Units
NPT	I3	number of user specified significant point sources	-
MPS	25I3	point source numbers user wants to be considered significant	-

TABLE 12. MPTER CARD TYPE 10 - POLAR COORDINATE RECEPTORS (1 card)
(used with option 8 = 1)

Variable	Format	Description	Units
RADIL(I),I=1,5	5F4.0	up to five radial distances which each generate 36 receptors around points CENTX, CENTY on azimuths 10 to 360 degrees	user units
CENTX	F8.3	east coordinate about which radials are centered	user units
CENTY	F8.3	north coordinate about which radials are centered	user units

TABLE 13. MPTER CARD TYPE 11 - POLAR COORDINATE RECEPTOR ELEVATIONS (36 cards) (used if options 1 and 8 are both 1)

Variable	Format	Description	Units
IDUM	I2	azimuth indicator (1 to 36)	-
	8X	(8 blank columns)	
ELRDUM	5F10.0	receptor ground-level elevations for this azimuth for up to five distances	user ht units

TABLE 14. MPTER CARD TYPE 12 - RECEPTOR* (up to 180 cards) (see 6.2.2.2)

Variable	Format	Description	Units
RNAME	2A4	8 alphanumeric characters for station identification	-
RREC	F10.3	east coordinate of receptor	user units
SREC	F10.3	north coordinate of receptor	user units
ZR	F10.0	receptor height above local ground-level	meters
ELR	F10.0	receptor ground-level elevation (see 6.2.2.2.1)	user ht units

*Card with ENDREC in columns 1-6 should follow the last receptor card (a maximum of 180 receptors are allowed input to MPTER for both those generated by option 8 and those entered on card type 12.)

TABLE 15. MPTER CARD TYPE 13 - SEGMENTED RUN (1 card) (used with option 20 = 1)

Variable	Format	Description	Units
IDAY	Free	number of days already processed	-
LDRUN	Format	last day to be processed in this run	-

TABLE 16. MPTER CARD TYPE 14 - METEOROLOGY (see 6.2.2.3)
(used with option 5 = 1)

Variable	Format	Description	Units
JYR	Free	year of met data	2 digits
DAY1	Format	Julian day of met data	3 digits
JHR		hour of met data	2 digits
IKST		stability class for this hour	-
QU		wind speed for this hour	$m\ s^{-1}$
QTEMP		ambient air temperature for this hour	Kelvin
QTHETA		wind direction for this hour	degrees azimuth
QHL		mixing height for this hour	meters

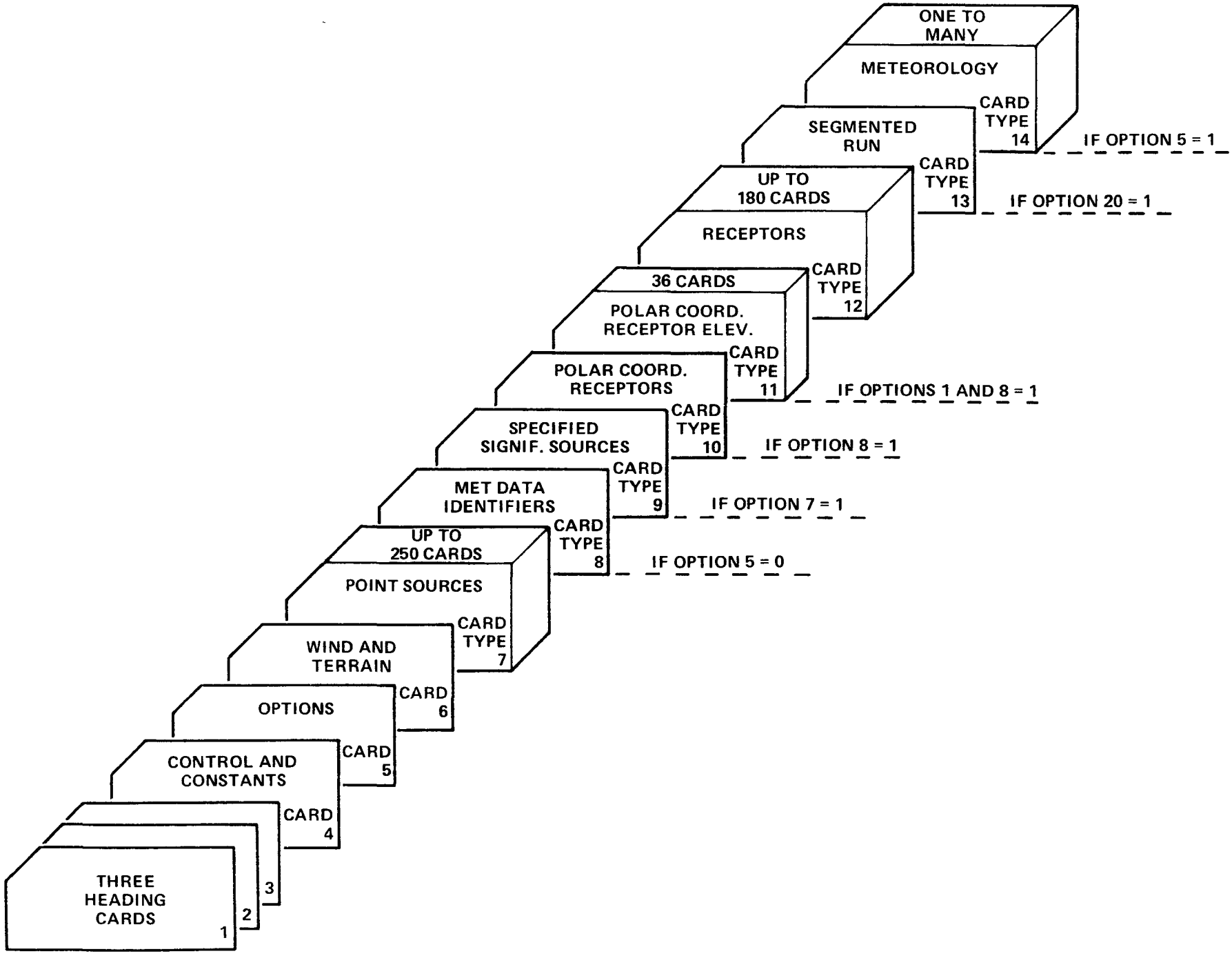

Figure 3. Input data deck setup for MPTER.

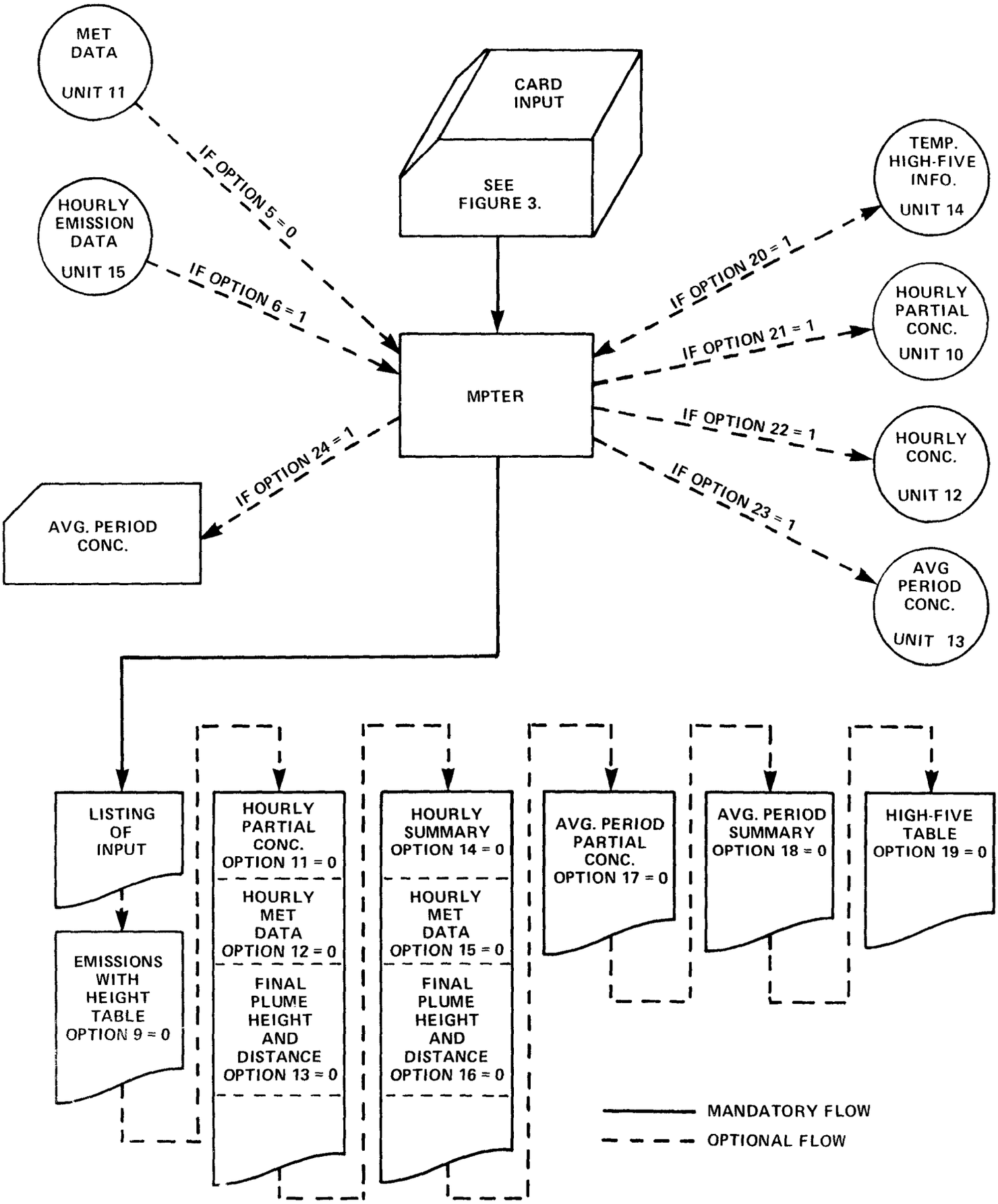

Figure 4. System flow for MPTER.

FILE INPUT

Table 17 shows the file structure for the meteorological data that is read from unit 11 if option 5 = 0. This file is unformatted and normally is obtained as output from RAMMET or the CRSTER preprocessor.

Table 18 shows the file structure for the emission data that is read from unit 15 if option 6 = 1. This file is unformatted and must be generated by the user.

CARD OUTPUT

Table 19 shows the card format of punched cards containing concentrations for each receptor for each averaging period. These are punched on unit 1 if option 24 = 1. These cards can be used as input to special purpose programs, such as plotter programs to contour the field of concentrations.

FILE OUTPUT

Table 20 shows the file structure for the partial concentrations that are written on unit 10 if option 21 =1; this file is unformatted. Output can become quite lengthy because so much information is available, so care should be exercised to ensure the allocated storage space can accommodate the amount of data generated.

Table 21 shows the file structure for the hourly concentrations that are written on unit 12 if option 22 = 1. This file is unformatted. These data can be quite useful when processed to both give average concentrations over any selected averaging time, and determine highest and second highest concentrations of these over the length of record. The processing of this file must be accomplished by user-devised programs.

Table 22 shows the file structure of the averaging-period concentrations that are written on unit 13 if option 23 = 1. This file is unformatted.

Table 23 shows the file structure of information related to high-five tables that are written on unit 14 if option 20 = 1, i.e., if a run is segmented. This file is unformatted and is read in upon execution of the next segment of the run.

TABLE 17. MPTER OPTIONAL INPUT FILE - METEOROLOGICAL DATA (Unit 11)
(input if option 5 = 0)

Variable	Dimensions	Description	Units
RECORD 1			
ID		sfc station identifier	5 digits
IYEAR		year of surface data	2 digits
IDM		mix ht station identifier	5 digits
IYR		year of mix ht data	2 digits
RECORD TYPE 2 (one for each day of year)			
JYR		year	
IMO		month	
DAY1		Julian day	
IKST	24	stability class	
QU	24	wind speed	$m\ s^{-1}$
QTEMP	24	ambient air temperature	K
DUMR	24	flow vector to 10°	deg-azimuth
QTHETA	24	randomized flow vector	deg-azimuth
HLH	2,24	mixing ht	m

TABLE 18. MPTER OPTIONAL INPUT FILE - EMISSION DATA (Unit 15)
(input if option 6 = 1)

Variable	Dimensions	Description	Units
RECORD TYPE 1 (one for each hour of simulation)			
IDATP	-	date-time indicator consisting of:	
		year	2 digits
		Julian day	3 digits
		hour	2 digits
SOURCE(IPOL, I), I = 1, NPT		Emission rate for the pollutant IPOL for each source	$g\ s^{-1}$

TABLE 19. MPTER OPTIONAL OUTPUT PUNCHED CARDS - AVERAGE CONCENTRATIONS
(Unit 1) (punched if option 24 = 1)

Variable	Card Columns	Description	Units
CARD TYPE 1 (One for each receptor for each averaging time)			
	1-4	word CNTL punched	
	5	blank	
RREC	6-15	east coordinate of receptor	user units
SREC	16-25	north coordinate of receptor	user units
GWU	26-35	concentration for averaging time	μgm^{-3}
	36-45	blank	
K	46-50	receptor number	-
ZR	51-60	receptor height above ground	m
ELR	61-70	receptor ground-level elevation	user height units
IDATE(1)	72,73	year	-
IDATE(2)	75-77	Julian day	-
NB	79,80	beginning hour of this period	-

TABLE 20. MPTER OPTIONAL OUTPUT FILE - PARTIAL CONCENTRATIONS (Unit 10)
(output if option 21 = 1)

Variable	Dimensions	Description	Units
RECORD 1	(from main program)		
NRECEP		number of receptors	-
NPT		number of sources	-
RREC(I), I = 1, NRECEP		east coordinate of receptor	user units
SREC(I), I = 1, NRECEP		north coordinate of receptor	user units
RECORD TYPE 2	(one record for each receptor for each simulated hour, from PTR)		
IDATE		year and Julian day	-
LH		hour	
K		receptor number	
PARTC(J), J = 1, NPT		concentration at receptor K from source J	g m^{-3}

TABLE 21. MPTER OPTIONAL OUTPUT FILE - HOURLY CONCENTRATIONS (Unit 12)
(output if option 22 = 1)

Variable	Dimensions	Description	Units
RECORD 1			
NPER		number of periods	-
NAVG		number of hours in averaging period	-
LINE1	14	80 alphanumeric characters for title	-
LINE2	14	80 alphanumeric characters for title	-
LINE3	14	80 alphanumeric characters for title	-
RECORD 2			
NRECEP		number of receptors	-
RREC(I), I = 1, NRECEP		east coordinate of receptor	user units
SREC(I), I = 1, NRECEP		north coordinate of receptor	user units
RECORD TYPE 3 (one for each simulated hour)			
IDATE(2)		Julian Day	
LH		hour	
PHCHI(I), I = 1, NRECEP		hourly concentration for each receptor	$g\ m^{-3}$

TABLE 22. MPTER OPTIONAL OUTPUT FILE - AVERAGING-PERIOD CONCENTRTIONS (Unit 13) (output if option 23 = 1)

Variable	Dimensions	Description	Units
RECORD 1			
NPER		number of periods	-
NAVG		number of hours in averaging period	-
LINE1	14	80 alphanumeric characters for title	-
LINE2	14	80 alphanumeric characters for title	-
LINE3	14	80 alphanumeric characters for title	-
RECORD 2			
NRECEP		number of receptors	
RREC(I), I = 1, NRECEP		east coordinate of receptor	user units
SREC(I), I = 1, NRECEP		north coordinate of receptor	user units
RECORD TYPE 3 (one for each simulated averaging period)			
IDATE(2)		Julian Day	
NB		ending hour of period	
PCHI(K), K = 1, NRECEP		averaging period concentration for each receptor	$g\ m^{-3}$

TABLE 23. MPTER OPTIONAL TEMPORARY FILE - VALUES FOR HIGH-FIVE TABLES (Unit 14) (output if option 20 = 1)

Variable	Dimensions	Description	Units
ONLY RECORD			
IDAY (on write)		number of days processed	
IDAYS (on read)		number of days previously processed	-
SUM	180	cumulation of long-term concentration	
NHR		number of hours processed	-
DAY1A		Julian day number of start of period of record	
HR1		start hour of period of record	-
HMAXA	3,5,180,5	Highest five concentrations (g m^{-3}), and associated day and hour, for each receptor, for five different averaging times	-

SECTION 8

EXAMPLE PROBLEMS

Four problems have been chosen to demonstrate some of the uses of MPTER and to also show the various types of output.

EXAMPLE ONE

The first problem concerns one source for a single one-hour period. The option to adjust for terrain is selected. Receptors are input so that five receptors are stacked vertically above each of four downwind positions. When using the terrain adjustment, MPTER is limited to making concentration estimates at receptors whose ground-level elevation is no higher than that of the lowest source stack top. The user tries to apply the model for a situation outside this restriction.

Receptors 16 through 20 all have a ground-level elevation of 10 meters higher than the stack top. Encountering this situation, the model sets the concentration to a number too large to be printed in the format allocated for the concentration. Asterisks thus appear on the output, signifying that no estimates can be made for these receptors.

Only the hourly summary of concentrations is printed. The meteorological data, used for the computation, the final effective height, and the distance to the final height are printed as part of the summary.

Note that since the terrain option is employed in this run, receptors whose ground-level elevations are lower than the source ground-level elevation are tagged with one asterisk, although computations are made for these receptors. Receptors whose ground-level elevations exceed that of the stack top are tagged with two asterisks, and no computations are attempted for these receptors.

This problem also shows that receptors can be at the same position and stacked in the vertical.

EXAMPLE TWO

The second example, in four parts, is a sensitivity study. For estimating concentrations directly downwind of an atypical source (low stack with high buoyancy), four situations can be described by using different parameters: A) final effective height, B) gradual plume rise, C) buoyancy-induced dispersion with final plume height, and D) buoyancy-induced dispersion with gradual plume rise. This problem shows that with some sources and meteorological conditions, multipeak concentrations with distance can be obtained, when using the options of gradual plume rise and buoyancy-induced dispersion in combination. A number of runs were made using various wind speed and stability class configurations to find this phenomenon. Other combinations of meteorology and source parameters will not exhibit multipeaks in the concentration profiles so vividly.

Concentrations are determined at various distances downwind from the source over a level surface. The receptors are directly east of the source and the wind is specified from the west (270 degrees).

Although two sources are used in this example, they are actually simulating a variation in stack gas temperature at the same source. Therefore the two sources are located at the same position.

In Run A considering only final rise, note that concentrations for both sources for both hours climb rapidly to a peak at a distance in the vicinity of 1.0 to 2.0 km from the source and then decrease slowly with distance.

In Run B, which considers the gradual rise of the plume, concentrations are somewhat higher near the source, but reach the same peak for the first hour since this peak is at a distance beyond the distance of final rise, 1.35 km for source 1, and 1.08 km for source 2. However, for the second hour, higher concentrations (30% higher for source 1) than in Run A are obtained closer to the source than the distance to final rise.

In Run C, which returns to consideration of final rise, but also includes buoyancy-induced dispersion, maximum concentrations (though slightly lower) are virtually unchanged for hour one. For hour two the maximum concentrations occur at the same distances as for Run A, but are about 80% of those for Run A.

In Run D, in which both gradual plume rise and buoyancy-induced dispersion are considered, maximum concentrations for hour one occur nearer the source and of higher magnitude, 26 to 38% higher, than in Run B. Also, source one has a secondary and a tertiary peak about the primary maximum. Source two has a secondary peak beyond the primary maximum. However, for hour two both sources display single maxima of lower magnitude, 84 to 90%, than that given by Run B, and at approximately the same distance from the source.

For these four runs, only the hourly contribution printouts are obtained; they include the meteorological data, plume height, and distance information.

Figure 3 is a log-log plot of concentration as a function of distance for source 2 for hour 1 for the four runs.

EXAMPLE THREE

The third example is a long term run in that calculations are made using hour-by-hour meteorological data for a full year. This is the only example where the high-five table (option 19 is left zero) is given. Also all receptors in this run are generated using option 8. Since the terrain option (option 1) is also employed, elevations on 36 cards of TYPE 11 are read in. All printout, with the exception of the high-five table, is deleted, (i.e., options 9 through 18 are employed resulting in a savings of many pages of output).

Note that asterisks relating to notes about receptor elevations are given on the receptor lists, but not in the high-five table. Asterisks in the high-five table are used to label the receptor with the highest and second-highest concentrations.

EXAMPLE FOUR

The fourth problem is included primarily as an example of all types of printed output except the high-five table. Also, more sources than can be considered as significant occur, and two sources are specified, (8 and 27) to obtain contribution information, even though they are not among the top 10 in ranking of expected impact. This step employs option 7. Meteorological data and plume height data are given on the hourly contribution printout, but not on the hourly summaries.

The runstream and output for the four examples follow:

```
M21AD0*GUIDE(1).EXAMPLE1
      1     MPTER RUN DEPICTING CONCENTRATIONS FOR VARYING TERRAIN HEIGHTS
      2     AND RECEPTORS WITH VARYING HEIGHTS ABOVE GROUND LEVEL.  TSP CONCENTRATIONS.
      3     PROGRAMMER: TOM PIERCE      9 JANUARY 1980
      4     78 1 1 1 1 4 1 0 1. 1. 14400.
      5     1 1 1 0 1 0 0 0 1 1 1 0 0 0 0 0 1 1 1 0 0 0 0 0
      6     10.,.07,.07,.1,.15,.35,.55,1.,1.,1.,1.,0.,0.
      7     SOURCE #1        0.00     0.00            1000.   50.00  415.00    2.00   20.00100.
      8     ENDP
      9      1KM GRD     1.000     0.000       0.       80.0
     10      1   50M     1.000     0.000      50.       80.0
     11      1  100M     1.000     0.000     100.       80.0
     12      1  150M     1.000     0.000     150.       80.0
     13      1  200M     1.000     0.000     200.       80.0
     14      2KM GRD     2.000     0.000       0.       120.
     15      2   50M     2.000     0.000      50.       120.
     16      2  100M     2.000     0.000     100.       120.
     17      2  150M     2.000     0.000     150.       120.
     18      2  200M     2.000     0.000     200.       120.
     19      3KM GRD     3.000     0.000       0.       140.
     20      3KM 50M     3.000     0.000      50.       140.
     21      3  100M     3.000     0.000     100.       140.
     22      3  150M     3.000     0.000     150.       140.
     23      3  200M     3.000     0.000     200.       140.
     24      4KM GRD     4.000     0.000       0.       160.
     25      4KM 50M     4.000     0.000      50.       160.
     26      4  100M     4.000     0.000     100.       160.
     27      4  150M     4.000     0.000     150.       160.
     28      4  200M     4.000     0.000     200.       160.
     29     ENDREC
     30     78,001,01,3,2.,283.,270.,2000.
```

RUNSTREAM, EXAMPLE 1

```
                                   MPTER - VERSION 79365
MPTER RUN DEPICTING CONCENTRATIONS FOR VARYING TERRAIN HEIGHTS
AND RECEPTORS WITH VARYING HEIGHTS ABOVE GROUND LEVEL.  TSP CONCENTRATIONS.
PROGRAMMER: TOM PIERCE        9 JANUARY 1980

                              GENERAL INPUT INFORMATION

 THIS RUN OF MPTER-VERSION 79365 IS FOR THE POLLUTANT PART FOR   1   1-HOUR PERIODS.
 CONCENTRATION ESTIMATES BEGIN ON HOUR- 1, JULIAN DAY-  1, YEAR-1978.
 A FACTOR OF       1.0000000 HAS BEEN SPECIFIED TO CONVERT USER LENGTH UNITS TO KILOMETERS.
  1 SIGNIFICANT SOURCES ARE TO BE CONSIDERED.
  A HALF-LIFE OF   14400.00 (SECONDS) HAS BEEN ASSUMED BY THE USER.
  A FACTOR OF       1.0000000 HAS BEEN SPECIFIED TO CONVERT USER HEIGHT UNITS TO METERS.

OPTION        OPTION LIST                    OPTION SPECIFICATION : 0= IGNORE OPTION
                                                                     1= USE OPTION
                      TECHNICAL OPTIONS
     1        TERRAIN ADJUSTMENTS                                     1
     2        DO NOT INCLUDE STACK DOWNWASH CALCULATIONS              1
     3        DO NOT INCLUDE GRADUAL PLUME RISE CALCULATIONS          1
     4        CALCULATE INITIAL PLUME SIZE                            0
                      INPUT OPTIONS
     5        READ MET DATA FROM CARDS                                1
     6        READ HOURLY EMISSIONS                                   0
     7        SPECIFY SIGNIFICANT SOURCES                             0
     8        READ RADIAL DISTANCES TO GENERATE RECEPTORS             0
                      PRINTED OUTPUT OPTIONS
     9        DELETE EMISSIONS WITH HEIGHT TABLE                      1
    10        DELETE MET DATA SUMMARY FOR AVG PERIOD                  1
    11        DELETE HOURLY CONTRIBUTIONS                             1
    12        DELETE MET DATA ON HOURLY CONTRIBUTIONS                 0
    13        DELETE FINAL PLUME RISE CALC ON HRLY CONTRIBUTIONS      0
    14        DELETE HOURLY SUMMARY                                   0
    15        DELETE MET DATA ON HRLY SUMMARY                         0
    16        DELETE FINAL PLUME RISE CALC ON HRLY SUMMARY            0
    17        DELETE AVG-PERIOD CONTRIBUTIONS                         1
    18        DELETE AVERAGING PERIOD SUMMARY                         1
    19        DELETE AVG CONCENTRATIONS AND HI-E TABLES               1
                      OTHER CONTROL AND OUTPUT OPTIONS
    20        RUN IS PART OF A SEGMENTED RUN                          0
    21        WRITE PARTIAL CONC TO DISK OR TAPE                      0
    22        WRITE HOURLY CONC TO DISK OR TAPE                       0
    23        WRITE AVG-PERIOD CONC TO DISK OR TAPE                   0
    24        PUNCH AVG-PERIOD CONC ONTO CARDS                        0

ANEMOMETER HEIGHT IS:      10.00
EXPONENTS FOR POWER- LAW WIND INCREASE WITH HEIGHT ARE: .07, .07, .10, .15, .35, .55
TERRAIN ADJUSTMENTS ARE: 1.000,1.000,1.000,1.000, .000, .000
```

POINT SOURCE INFORMATION

SOURCE	EAST COORD (USER UNITS)	NORTH COORD (USER UNITS)	SO2(G/SEC) EMISSIONS	PART(G/SEC) EMISSIONS	STACK HT(M)	STACK TEMP(K)	STACK DIAM(M)	STACK VEL(M/SEC)	POTEM. IMPACT (MICRO G/M**3)	EFF HT(M)	GRD-LVL ELEV USER HT UNITS	BUOY FLUX F **4/S**3
1 SOURCE #1	.00	.00	.00	10.00	.00	50.0	415.0	2.0	20.0	1500.05	196.96	100.00	57.66

SIGNIFICANT PART POINT SOURCES

RANK	CHI-MAX (MICROGRAMS/M**3)	SOURCE NO.
1	1500.05	1

ADDITIONAL INFORMATION ON SOURCES.

EMISSION INFORMATION FOR 1 (NPT) POINT SOURCES HAS BEEN INPUT
1 SIGNIFICANT POINT SOURCES(NSIGP) ARE TO BE USED FOR THIS RUN
THE ORDER OF SIGNIFICANCE(IMPS) FOR 25 OR LESS POINT SOURCES USED IN THIS RUN AS LISTED BY POINT SOURCE NUMBER:
1

RECEPTOR INFORMATION

RECEPTOR	IDENTIFICATION	EAST COORD (USER UNITS)	NORTH COORD (USER UNITS)	RECEPTOR HT ABV LOCAL GRD LVL (METERS)	RECEPTOR GROUND LEVEL ELEVATION (USER HT UNITS)
1 *	1KM GRD	1.000	.000	.0	80.0
2 *	1 50M	1.000	.000	50.0	80.0
3 *	1 100M	1.000	.000	100.0	80.0
4 *	1 150M	1.000	.000	150.0	80.0
5 *	1 200M	1.000	.000	200.0	80.0
6	2KM GRD	2.000	.000	.0	120.0
7	2 50M	2.000	.000	50.0	120.0
8	2 100M	2.000	.000	100.0	120.0
9	2 150M	2.000	.000	150.0	120.0
10	2 200M	2.000	.000	200.0	120.0
11	3KM GRD	3.000	.000	.0	140.0
12	3KM 50M	3.000	.000	50.0	140.0
13	3 100M	3.000	.000	100.0	140.0
14	3 150M	3.000	.000	150.0	140.0
15	3 200M	3.000	.000	200.0	140.0
16**	4KM GRD	4.000	.000	.0	160.0
17**	4KM 50M	4.000	.000	50.0	160.0
18**	4 100M	4.000	.000	100.0	160.0
19**	4 150M	4.000	.000	150.0	160.0
20**	4 200M	4.000	.000	200.0	160.0

* ONE ASTERISK INDICATES THAT THE ASSOCIATED RECEPTOR(S) HAVE A GROUND LEVEL ELEVATION LOWER THAN THE LOWEST SOURCE BASE ELEVATION. CAUTION SHOULD BE USED IN INTERPRETING CONCENTRATIONS FOR THESE RECEPTORS.
** TWO ASTERISKS INDICATE THAT THE ASSOCIATED RECEPTOR(S) HAVE GROUND LEVEL ELEVATIONS ABOVE THE LOWEST STACK TOP. CONSEQUENTLY NO CALCULATIONS WILL BE PERFORMED WITH THIS RECEPTOR. A SERIES OF ASTERISKS WILL INSTEAD APPEAR IN THE OUTPUT.

MPTER RUN DEPICTING CONCENTRATIONS FOR VARYING TERRAIN HEIGHTS
AND RECEPTORS WITH VARYING HEIGHTS ABOVE GROUND LEVEL. TSP CONCENTRATIONS.
PROGRAMMER: TOM PIERCE 9 JANUARY 1980

PART SUMMARY CONCENTRATION TABLE(MICROGRAMS/M**3) 78/ 1 * HOUR 1

HOUR	THETA (DEG)	SPEED (M/S)	MIXING HEIGHT(M)	TEMP (K)	STABILITY CLASS
1	270.00	2.00	2000.00	283.00	3

	1	2	3	4	5	6	7	8	9	10
FINAL HT (M)	286.76									
DIST FIN HT (KM)	.622									

RECEPTOR NO.	NAME	EAST COORD	NORTH COORD	RECEPTOR HT ABV GRD (M)	RECEPTOR GRD-LVL ELEV (USER HT UNITS)	TOTAL FROM SIGNIF POINT SOURCES	TOTAL FROM ALL SOURCES	CONCENTRATION RANK
1 *	1KM GRD	1.00	.00	.0	80.0	6.1159	6.1159	20
2 *	1 50M	1.00	.00	50.0	80.0	59.4520	59.4520	19
3 *	1 100M	1.00	.00	100.0	80.0	590.5824	590.5824	17
4 *	1 150M	1.00	.00	150.0	80.0	3009.8202	3009.8202	7
5 *	1 200M	1.00	.00	200.0	80.0	7858.8595	7858.8595	6
6	2KM GRD	2.00	.00	.0	120.0	589.6718	589.6718	18
7	2 50M	2.00	.00	50.0	120.0	785.3207	785.3207	16
8	2 100M	2.00	.00	100.0	120.0	1328.2233	1328.2233	11
9	2 150M	2.00	.00	150.0	120.0	2058.2210	2058.2210	9
10	2 200M	2.00	.00	200.0	120.0	2687.7896	2687.7896	8
11	3KM GRD	3.00	.00	.0	140.0	918.0006	918.0006	15
12	3KM 50M	3.00	.00	50.0	140.0	965.0574	965.0574	14
13	3 100M	3.00	.00	100.0	140.0	1087.7530	1087.7530	13
14	3 150M	3.00	.00	150.0	140.0	1237.3956	1237.3956	12
15	3 200M	3.00	.00	200.0	140.0	1352.9459	1352.9459	10
16**	4KM GRD	4.00	.00	.0	160.0	.0000**	**********	1
17**	4KM 50M	4.00	.00	50.0	160.0	.0000**	**********	2
18**	4 100M	4.00	.00	100.0	160.0	.0000**	**********	3
19**	4 150M	4.00	.00	150.0	160.0	.0000**	**********	4
20**	4 200M	4.00	.00	200.0	160.0	.0000**	**********	5

AFIN

```
M21ADO*GUIDE(1).EXAMPLE2A
MPTER RUN FOR SENSITIVITY TEST INVOLVING 2 SOURCES AND 2 HOURS.
NO GRADUAL PLUME RISE OR INITIAL DISPERSION CALCULATIONS.
DATA INPUT BY TOM PIERCE    30 OCTOBER 1979
79,299,1,2,1,3,2,0,1.,1.,295200.
0,1,1,0,1,0,0,0,0,1,0,0,0,1,1,1,1,1,1,0,0,0,0,0
10.,.07,.07,.1,.15,.35,.55,.0,.0,.0,.0,.0,.0
SRC 1 3.5                    81.09            12.8    727.6    3.5      23.5
SRC 14 427.6                 81.09            12.8    427.6    3.5      23.5
ENDP
1        .1
2        .2
3        .3
4         .4
5        .5
6        .6
7        .7
8        .8
9        .9
10       1.
11       1.2
12       1.5
13       2.
14       3.
15       4.
16       5.
17       6.
18       7.
19       8.
20       9.
21       10.
22       12.
23       15.
24       20.
25       30.
26       40.
27       50.
ENDREC
79,299,1,2,5.,277.6,270.,2000.
79,299,2,1,2.,277.6,270.,2000.
```

RUNSTREAM, EXAMPLE 2A

```
                                   MPTER - VERSION 79365
MPTER RUN FOR SENSITIVITY TEST INVOLVING 2 SOURCES AND 2 HOURS.
NO GRADUAL PLUME RISE OR INITIAL DISPERSION CALCULATIONS.
DATA INPUT BY TOM PIERCE    30 OCTOBER 1979.

                          GENERAL INPUT INFORMATION

 THIS RUN OF MPTER-VERSION 79365 IS FOR THE POLLUTANT SO2  FOR   2   1-HOUR PERIODS.
 CONCENTRATION ESTIMATES BEGIN ON HOUR- 1, JULIAN DAY-290, YEAR-1979.
 A FACTOR OF      1.0000000 HAS BEEN SPECIFIED TO CONVERT USER LENGTH UNITS TO KILOMETERS.
  2 SIGNIFICANT SOURCES ARE TO BE CONSIDERED.
  A HALF-LIFE OF  295200.00 (SECONDS) HAS BEEN ASSUMED BY THE USER.

 OPTION        OPTION LIST                  OPTION SPECIFICATION : 0= IGNORE OPTION
                                                                     1= USE OPTION
                          TECHNICAL OPTIONS
      1        TERRAIN ADJUSTMENTS                                   0
      2        DO NOT INCLUDE STACK DOWNWASH CALCULATIONS            1
      3        DO NOT INCLUDE GRADUAL PLUME RISE CALCULATIONS        1
      4        CALCULATE INITIAL PLUME SIZE                          0
                          INPUT OPTIONS
      5        READ MET DATA FROM CARDS                              1
      6        READ HOURLY EMISSIONS                                 0
      7        SPECIFY SIGNIFICANT SOURCES                           0
      8        READ RADIAL DISTANCES TO GENERATE RECEPTORS           0
                          PRINTED OUTPUT OPTIONS
      9        DELETE EMISSIONS WITH HEIGHT TABLE                    0
     10        DELETE MET DATA SUMMARY FOR AVG PERIOD                1
     11        DELETE HOURLY CONTRIBUTIONS                           0
     12        DELETE MET DATA ON HOURLY CONTRIBUTIONS               0
     13        DELETE FINAL PLUME RISE CALC ON HRLY CONTRIBUTIONS    0
     14        DELETE HOURLY SUMMARY                                 1
     15        DELETE MET DATA ON HRLY SUMMARY                       1
     16        DELETE FINAL PLUME RISE CALC ON HRLY SUMMARY          1
     17        DELETE AVG-PERIOD CONTRIBUTIONS                       1
     18        DELETE AVERAGING PERIOD SUMMARY                       1
     19        DELETE AVG CONCENTRATIONS AND HI-5 TABLES             1
                          OTHER CONTROL AND OUTPUT OPTIONS
     20        RUN IS PART OF A SEGMENTED RUN                        0
     21        WRITE PARTIAL CONC TO DISK OR TAPE                    0
     22        WRITE HOURLY CONC TO DISK OR TAPE                     0
     23        WRITE AVG-PERIOD CONC TO DISK OR TAPE                 0
     24        PUNCH AVG-PERIOD CONC ONTO CARDS                      0

 ANEMOMETER HEIGHT=      10.00
 WIND PROFILE WITH HEIGHT EXPONENTS CORRESPONDING TO STABILITY ARE AS FOLLOWS:
      FOR STABILITY A:  .07
          STABILITY B:  .07
          STABILITY C:  .10
          STABILITY D:  .15
          STABILITY E:  .35
          STABILITY F:  .55
```

POINT SOURCE INFORMATION

SOURCE	EAST COORD (USER UNITS)	NORTH COORD (USER UNITS)	SO2(G/SEC) EMISSIONS	PART(G/SEC) EMISSIONS	STACK HT(M)	STACK TEMP(K)	STACK DIAM(M)	STACK VEL(M/SEC)	POTEN. IMPACT (MICRO G/M**3)	EFF HT(M)	GRD-LVL ELEV USER HT UNITS	BUOY FLUX F M**4/S**3
1 SRC 1 3.5	.00	.00	81.00	.00	12.8	727.6	3.5	23.5	22.74	497.65	.00	421.54
2 SRC 14 427.6	.00	.00	81.00	.00	12.8	427.6	3.5	23.5	44.56	342.93	.00	222.15

SIGNIFICANT SO2 POINT SOURCES

RANK	CHI-MAX (MICROGRAMS/M**3)	SOURCE NO.
1	44.56	2
2	22.74	1

TOTAL SO2 EMISSION AND CUMULATIVE FRACTION ACCORDING TO HEIGHT

HEIGHT(M)	TOTAL POINT EMISSIONS(G/S)	CUMULATIVE FRACTION
0 - 5	.00	.000
6 - 10	.00	.000
11 - 15	162.18	1.000
16 - 20	.00	1.000
21 - 25	.00	1.000
26 - 30	.00	1.000
31 - 35	.00	1.000
36 - 40	.00	1.000
41 - 45	.00	1.000
46 - 50	.00	1.000
51 - 55	.00	1.000
56 - 60	.00	1.000
61 - 65	.00	1.000
66 - 70	.00	1.000
71 - 75	.00	1.000
76 - 80	.00	1.000
81 - 85	.00	1.000
86 - 90	.00	1.000
91 - 95	.00	1.000
96 -100	.00	1.000
TOTAL	162.18	

ADDITIONAL INFORMATION ON SOURCES.

EMISSION INFORMATION FOR 2 (NPT) POINT SOURCES HAS BEEN INPUT
2 SIGNIFICANT POINT SOURCES(NSIGP) ARE TO BE USED FOR THIS RUN
THE ORDER OF SIGNIFICANCE(IMPS) FOR 25 OR LESS POINT SOURCES USED IN THIS RUN AS LISTED BY POINT SOURCE NUMBER:
2 1

RECEPTOR INFORMATION

RECEPTOR	IDENTIFICATION	EAST COORD	NORTH COORD	RECEPTOR HT AGV LOCAL GRD LVL	RECEPTOR GROUND LEVEL ELEVATION

		(USER UNITS)		(METERS)	(USER HT UNITS)
1	1	.100	.000	.0	.0
2	2	.200	.000	.0	.0
3	3	.300	.000	.0	.0
4	4	.400	.000	.0	.0
5	5	.500	.000	.0	.0
6	6	.600	.000	.0	.0
7	7	.700	.000	.0	.0
8	8	.800	.000	.0	.0
9	9	.900	.000	.0	.0
10	10	1.000	.000	.0	.0
11	11	1.200	.000	.0	.0
12	12	1.500	.000	.0	.0
13	13	2.000	.000	.0	.0
14	14	3.000	.000	.0	.0
15	15	4.000	.000	.0	.0
16	16	5.000	.000	.0	.0
17	17	6.000	.000	.0	.0
18	18	7.000	.000	.0	.0
19	19	8.000	.000	.0	.0
20	20	9.000	.000	.0	.0
21	21	10.000	.000	.0	.0
22	22	12.000	.000	.0	.0
23	23	15.000	.000	.0	.0
24	24	20.000	.000	.0	.0
25	25	30.000	.000	.0	.0
26	26	40.000	.000	.0	.0
27	27	50.000	.000	.0	.0

MPTER RUN FOR SENSITIVITY TEST INVOLVING 2 SOURCES AND 2 HOURS.
NO GRADUAL PLUME RISE OR INITIAL DISPERSION CALCULATIONS.
DATA INPUT BY TOM PIERCE 30 OCTOBER 1979

SO2 CONTRIBUTION(MICROGRAMS/M**3) FROM SIGNIFICANT POINT SOURCES 79/ 299 : HOUR 1

HOUR	THETA (DEG)	SPEED (M/S)	MIXING HEIGHT (M)	TEMP (K)	STABILITY CLASS
1	270.00	5.00	2000.00	277.60	2

	1	2	3	4	5	6	7	8	9	10
FINAL HT (M)	304.74	229.56								
DIST FIN HT (KM)	1.358	1.079								

RANK	1	2	TOTAL SIGNIF POINT	TOTAL ALL POINT SOURCES
SOURCE #	2	1		
RECEP #				
1	.000	.000	.000	.000
2	.000	.000	.000	.000
3	.000	.000	.000	.000
4	.000	.000	.000	.000
5	.108	.000	.108	.108
6	1.617	.006	1.622	1.622
7	7.135	.124	7.260	7.260
8	16.942	.826	17.768	17.768
9	28.549	2.770	31.319	31.319
10	39.302	6.172	45.474	45.474
11	53.495	15.467	68.963	68.963
12	58.210	27.210	85.420	85.420
13	48.616	32.441	81.058	81.058
14	29.271	23.943	52.214	52.214
15	17.423	15.949	33.371	33.371
16	11.637	11.023	22.660	22.660
17	8.279	7.984	16.262	16.262
18	6.179	6.022	12.201	12.201
19	4.794	4.705	9.498	9.498
20	3.851	3.800	7.651	7.651
21	3.202	3.174	6.376	6.376
22	2.439	2.431	4.870	4.870
23	1.908	1.907	3.815	3.815
24	1.477	1.477	2.955	2.955
25	1.041	1.041	2.083	2.083
26	.813	.813	1.626	1.626
27	.671	.671	1.343	1.343

MPTER RUN FOR SENSITIVITY TEST INVOLVING 2 SOURCES AND 2 HOURS.
NO GRADUAL PLUME RISE OR INITIAL DISPERSION CALCULATIONS.
DATA INPUT BY TOM PIERCE 30 OCTOBER 1979

SO2 CONTRIBUTION(MICROGRAMS/M**3) FROM SIGNIFICANT POINT SOURCES 79/ 299 : HOUR 2

HOUR	THETA (DEG)	SPEED (M/S)	MIXING HEIGHT (M)	TEMP (K)	STABILITY CLASS
2	270.00	2.30	2000.00	277.60	1

	1	2	3	4	5	6	7	8	9	10
FINAL HT (M)	742.70	532.20								
DIST FIN HT (KM)	1.354	1.079								

RANK	1	2	TOTAL SIGNIF POINT	TOTAL ALL POINT SOURCES
SOURCE #	2	1		
RECEP #				
1	.000	.000	.000	.000
2	.000	.000	.000	.000
3	.000	.000	.000	.000
4	.000	.000	.000	.000
5	.003	.000	.003	.003
6	1.573	.005	1.578	1.578
7	17.364	.910	18.274	18.274
8	44.581	8.347	52.928	52.928
9	62.685	22.658	85.343	85.343
10	67.256	35.060	102.316	102.316
11	56.349	41.700	98.049	98.049
12	35.273	31.576	66.849	66.849
13	20.906	20.810	41.716	41.716
14	14.499	14.499	28.997	28.997
15	11.282	11.282	22.564	22.564
16	9.292	9.292	18.584	18.584
17	7.932	7.932	15.864	15.864
18	6.940	6.940	13.880	13.880
19	6.183	6.183	12.365	12.365
20	5.584	5.584	11.168	11.168
21	5.098	5.098	10.197	10.197
22	4.356	4.356	8.712	8.712
23	3.594	3.594	7.188	7.188
24	2.805	2.805	5.610	.610
25	1.978	1.978	3.955	3.955
26	1.542	1.542	3.084	3.084
27	1.270	1.270	2.540	2.540

M21ADO*GUIDE(1).EXAMPLE2B

```
MPTER RUN FOR SENSITIVITY TEST INVOLVING 2 SOURCES AND 2 HOURS.
GRADUAL PLUME RISE OPTION EMPLOYED.
DATA INPUT BY TOM PIERCE    30 OCTOBER 1979
79,299,1,2,1,3,2,0,1.,1.,295200.
0,1,0,0,1,0,0,0,0,0,1,0,0,0,1,1,1,1,1,1,1,0,0,0,0,0,0
10.,.07,.07,.1,.15,.35,.55,.0,.0,.0,.0,.0,.0
SRC 1 3.5                    81.09          12.8    727.6   3.5     23.5
SRC 14 427.6                 81.09          12.8    427.6   3.5     23.5
ENDP
1       .1
2       .2
3       .3
4        .4
5       .5
6       .6
7       .7
8       .8
9       .9
10      1.
11      1.2
12      1.5
13      2.
14      3.
15      4.
16      5.
17      6.
18      7.
19      8.
20      9.
21      10.
22      12.
23      15.
24      20.
25      30.
26      40.
27      50.
ENDREC
79,299,1,2,5.,277.6,270.,2000.
79,299,2,1,2.,277.6,270.,2000.
```

RUNSTEAM, EXAMPLE 2B

```
                                    MPTER - VERSION 79365
MPTER RUN FOR SENSITIVITY TEST INVOLVING 2 SOURCES AND 2 HOURS.
GRADUAL PLUME RISE OPTION EMPLOYED.
DATA INPUT BY TOM PIERCE     30 OCTOBER 1979

                              GENERAL INPUT INFORMATION

 THIS RUN OF MPTER-VERSION 79365 IS FOR THE POLLUTANT SO2  FOR   2   1-HOUR PERIODS.
 CONCENTRATION ESTIMATES BEGIN ON HOUR- 1, JULIAN DAY-200, YEAR-1979.
 A FACTOR OF      1.0000000 HAS BEEN SPECIFIED TO CONVERT USER LENGTH UNITS TO KILOMETERS.
  2 SIGNIFICANT SOURCES ARE TO BE CONSIDERED.
  A HALF-LIFE OF  29520).00 (SECONDS) HAS BEEN ASSUMED BY THE USER.

 OPTION        OPTION LIST                    OPTION SPECIFICATION : 0= IGNORE OPTION
                                                                     1= USE OPTION
                          TECHNICAL OPTIONS
    1          TERRAIN ADJUSTMENTS                                   0
    2          DO NOT INCLUDE STACK DOWNWASH CALCULATIONS            1
    3          DO NOT INCLUDE GRADUAL PLUME RISE CALCULATIONS        0
    4          CALCULATE INITIAL PLUME SIZE                          0
                          INPUT OPTIONS
    5          READ MET DATA FROM CARDS                              1
    6          READ HOURLY EMISSIONS                                 0
    7          SPECIFY SIGNIFICANT SOURCES                           0
    8          READ RADIAL DISTANCES TO GENERATE RECEPTORS           0
                          PRINTED OUTPUT OPTIONS
    9          DELETE EMISSIONS WITH HEIGHT TABLE                    0
   10          DELETE MET DATA SUMMARY FOR AVG PERIOD                1
   11          DELETE HOURLY CONTRIBUTIONS                           0
   12          DELETE MET DATA ON HOURLY CONTRIBUTIONS               0
   13          DELETE FINAL PLUME RISE CALC ON HRLY CONTRIBUTIONS    0
   14          DELETE HOURLY SUMMARY                                 1
   15          DELETE MET DATA ON HRLY SUMMARY                       1
   16          DELETE FINAL PLUME RISE CALC ON HRLY SUMMARY          1
   17          DELETE AVG-PERIOD CONTRIBUTIONS                       1
   18          DELETE AVERAGING PERIOD SUMMARY                       1
   19          DELETE AVG CONCENTRATIONS AND HI-E TABLES             1
                          OTHER CONTROL AND OUTPUT OPTIONS
   20          RUN IS PART OF A SEGMENTED RUN                        0
   21          WRITE PARTIAL CONC TO DISK OR TAPE                    0
   22          WRITE HOURLY CONC TO DISK OR TAPE                     0
   23          WRITE AVG-PERIOD CONC TO DISK OR TAPE                 0
   24          PUNCH AVG-PERIOD CONC ONTO CARDS                      0

 ANEMOMETER HEIGHT=      10.00
 WIND PROFILE WITH HEIGHT EXPONENTS CORRESPONDING TO STABILITY ARE AS FOLLOWS:
      FOR STABILITY A:  .07
          STABILITY B:  .07
          STABILITY C:  .10
          STABILITY D:  .15
          STABILITY E:  .35
          STABILITY F:  .55
```

POINT SOURCE INFORMATION

SOURCE	EAST COORD (USER UNITS)	NORTH COORD (USER UNITS)	SO2(G/SEC) EMISSIONS	PART(G/SEC) EMISSIONS	STACK HT(M)	STACK TEMP(K)	STACK DIAM(M)	STACK VEL(M/SEC)	POTEN. IMPACT (MICRO G/M**3)	EFF HT(M)	GRD-LVL ELEV USER HT UNITS	BUOY FLUX F M**4/S**3
1 SRC 1 3.5	.00	.00	81.00	.00	12.8	727.6	3.5	23.5	22.74	497.65	.00	421.54
2 SRC 14 427.6	.00	.00	81.00	.00	12.8	427.6	3.5	23.5	44.56	342.93	.00	222.15

SIGNIFICANT SO2 POINT SOURCES

RANK	CHI-MAX (MICROGRAMS/M**3)	SOURCE NO.
1	44.56	2
2	22.74	1

TOTAL SO2 EMISSION AND CUMULATIVE FRACTION ACCORDING TO HEIGHT

HEIGHT(M)	TOTAL POINT EMISSIONS(G/S)	CUMULATIVE FRACTION
0 - 5	.00	.000
6 - 10	.00	.000
11 - 15	162.18	1.000
16 - 20	.00	1.000
21 - 25	.00	1.000
26 - 30	.00	1.000
31 - 35	.00	1.000
36 - 40	.00	1.000
41 - 45	.00	1.000
46 - 50	.00	1.000
51 - 55	.00	1.000
56 - 60	.00	1.000
61 - 65	.00	1.000
66 - 70	.00	1.000
71 - 75	.00	1.000
76 - 80	.00	1.000
81 - 85	.00	1.000
86 - 90	.00	1.000
91 - 95	.00	1.000
96 -100	.00	1.000
TOTAL	162.18	

ADDITIONAL INFORMATION ON SOURCES.

EMISSION INFORMATION FOR 2 (NPT) POINT SOURCES HAS BEEN INPUT
2 SIGNIFICANT POINT SOURCES(NSIGP) ARE TO BE USED FOR THIS RUN
THE ORDER OF SIGNIFICANCE(IMPS) FOR 25 OR LESS POINT SOURCES USED IN THIS RUN AS LISTED BY POINT SOURCE NUMBER:
2 1

RECEPTOR INFORMATION

RECEPTOR IDENTIFICATION	EAST COORD	NORTH COORD	RECEPTOR HT ABV LOCAL GRD LVL	RECEPTOR GROUND LEVEL ELEVATION

		(USER UNITS)	(METERS)		(USER HT UNITS)
1	1	.100	.000	.0	.0
2	2	.200	.000	.0	.0
3	3	.300	.000	.0	.0
4	4	.400	.000	.0	.0
5	5	.500	.000	.0	.0
6	6	.600	.000	.0	.0
7	7	.700	.000	.0	.0
8	8	.800	.000	.0	.0
9	9	.900	.000	.0	.0
10	10	1.000	.000	.0	.0
11	11	1.200	.000	.0	.0
12	12	1.500	.000	.0	.0
13	13	2.000	.000	.0	.0
14	14	3.000	.000	.0	.0
15	15	4.000	.000	.0	.0
16	16	5.000	.000	.0	.0
17	17	6.000	.000	.0	.0
18	18	7.000	.000	.0	.0
19	19	8.000	.000	.0	.0
20	20	9.000	.000	.0	.0
21	21	10.000	.000	.0	.0
22	22	12.000	.000	.0	.0
23	23	15.000	.000	.0	.0
24	24	20.000	.000	.0	.0
25	25	30.000	.000	.0	.0
26	26	40.000	.000	.0	.0
27	27	50.000	.000	.0	.0

MPTER RUN FOR SENSITIVITY TEST INVOLVING 2 SOURCES AND 2 HOURS.
GRADUAL PLUME RISE OPTION EMPLOYED.
DATA INPUT BY TOM PIERCE 30 OCTOBER 1979

SO2 CONTRIBUTION(MICROGRAMS/M**3) FROM SIGNIFICANT POINT SOURCES 79/ 299 : HOUR 1

HOUR	THETA (DEG)	SPEED (M/S)	MIXING HEIGHT (M)	TEMP (K)	STABILITY CLASS
1	270.00	5.10	2000.00	277.60	2

	1	2	3	4	5	6	7	8	9	10
FINAL HT (M)	304.76	229.56								
DIST FIN HT (KM)	1.358	1.079								

RANK	1	2	TOTAL SIGNIF POINT	TOTAL ALL POINT SOURCES
SOURCE #	2	1		
RECEP #				
1	.030	.000	.030	.030
2	2.613	.130	2.743	2.743
3	11.376	1.212	12.588	12.588
4	20.788	3.338	24.126	24.126
5	32.587	7.353	39.940	39.940
6	40.819	11.576	52.396	52.396
7	45.576	15.242	60.818	60.818
8	47.713	18.075	65.788	65.788
9	48.073	20.083	68.156	68.156
10	47.301	21.383	68.683	68.683
11	53.495	22.421	75.917	75.917
12	58.210	27.210	85.420	85.420
13	48.616	32.441	81.058	81.058
14	28.271	23.943	52.214	52.214
15	17.423	15.949	33.371	33.371
16	11.637	11.023	22.660	22.660
17	8.279	7.984	16.262	16.262
18	6.179	6.022	12.201	12.201
19	4.794	4.705	9.498	9.498
20	3.851	3.800	7.651	7.651
21	3.202	3.174	6.376	6.376
22	2.439	2.431	4.870	4.870
23	1.908	1.907	3.815	3.815
24	1.477	1.477	2.955	2.955
25	1.041	1.041	2.083	2.083
26	.813	.813	1.626	1.626
27	.671	.671	1.343	1.343

MPTER RUN FOR SENSITIVITY TEST INVOLVING 2 SOURCES AND 2 HOURS.
GRADUAL PLUME RISE OPTION EMPLOYED.
DATA INPUT BY TOM PIERCE 30 OCTOBER 1979

SO2 CONTRIBUTION (MICROGRAMS/M**3) FROM SIGNIFICANT POINT SOURCES 79/ 299 : HOUR 2

HOUR	THETA (DEG)	SPEED (M/S)	MIXING HEIGHT (M)	TEMP (K)	STABILITY CLASS
2	270.00	2.10	2000.00	277.60	1

	1	2	3	4	5	6	7	8	9	10
FINAL HT (M)	782.70	532.20								
DIST FIN HT (KM)	1.354	1.079								

RANK	1	2	TOTAL SIGNIF POINT	TOTAL ALL POINT SOURCES
SOURCE # / RECEP #	2	1		
1	.000	.000	.000	.000
2	.000	.000	.000	.000
3	.019	.000	.019	.019
4	.798	.027	.825	.825
5	8.932	1.089	10.021	10.021
6	37.836	11.002	48.838	48.838
7	66.056	30.054	96.110	96.110
8	78.757	46.202	124.959	124.959
9	78.548	53.806	132.350	132.350
10	71.755	54.328	126.083	126.083
11	56.349	45.644	101.993	101.993
12	35.273	31.576	66.849	66.849
13	20.806	20.910	41.716	41.716
14	14.499	14.499	28.997	28.997
15	11.282	11.282	22.564	22.564
16	9.292	9.292	18.584	18.584
17	7.932	7.932	15.864	15.864
18	6.940	6.940	13.880	13.880
19	6.183	6.183	12.365	12.365
20	5.584	5.584	11.168	11.168
21	5.098	5.098	10.197	10.197
22	4.356	4.356	8.712	8.712
23	3.594	3.594	7.188	7.188
24	2.805	2.805	5.610	5.610
25	1.978	1.978	3.955	3.955
26	1.542	1.542	3.084	3.084
27	1.270	1.270	2.540	2.54

```
M21AD0*GUIDE(1).EXAMPLE2C
      MPTER RUN FOR SENSITIVITY TEST INVOLVING 2 SOURCES AND 2 HOURS.
      OPTION FOR CALCUALTION OF INITIAL DISPERSION EMPLOYED.
      DATA INPUT BY TOM PIERCE    30 OCTOBER 1979
      79,299,1,2,1,3,2,0,1.,1.,295200.
      0,1,1,1,1,0,0,0,0,1,0,0,0,1,1,1,1,1,1,0,0,0,0,0
      10.,.07,.07,.1,.15,.35,.55,.0,.0,.0,.0,.0,.0
      SRC 1 3.5                    81.09          12.8    727.6   3.5     23.5
      SRC 14 427.6                 81.09          12.8    427.6   3.5     23.5
      ENDP
      1       .1
      2       .2
      3       .3
      4        .4
      5       .5
      6       .6
      7       .7
      8       .8
      9       .9
      10      1.
      11      1.2
      12      1.5
      13      2.
      14      3.
      15      4.
      16      5.
      17      6.
      18      7.
      19      8.
      20      9.
      21      10.
      22      12.
      23      15.
      24      20.
      25      30.
      26      40.
      27      50.
      ENDREC
      79,299,1,2,5.,277.6,270.,2000.
      79,299,2,1,2.,277.6,270.,2000.
```

RUNSTREAM, EXAMPLE 2C

```
                                   MPTER - VERSION 79365
MPTER RUN FOR SENSITIVITY TEST INVOLVING 2 SOURCES AND 2 HOURS.
OPTION FOR CALCULATION OF INITIAL DISPERSION EMPLOYED.
DATA INPUT BY TOM PIERCE    30 OCTOBER 1979

                          GENERAL INPUT INFORMATION

 THIS RUN OF MPTER-VERSION 79365 IS FOR THE POLLUTANT SO2  FOR   2   1-HOUR PERIODS.
 CONCENTRATION ESTIMATES BEGIN ON HOUR- 1, JULIAN DAY-299, YEAR-1979.
 A FACTOR OF      1.0000002 HAS BEEN SPECIFIED TO CONVERT USER LENGTH UNITS TO KILOMETERS.
  2 SIGNIFICANT SOURCES ARE TO BE CONSIDERED.
  A HALF-LIFE OF  295200.00 (SECONDS) HAS BEEN ASSUMED BY THE USER.

 OPTION      OPTION LIST                    OPTION SPECIFICATION : 0- IGNORE OPTION
                                                                   1- USE OPTION
                        TECHNICAL OPTIONS
    1        TERRAIN ADJUSTMENTS                                    0
    2        DO NOT INCLUDE STACK DOWNWASH CALCULATIONS             1
    3        DO NOT INCLUDE GRADUAL PLUME RISE CALCULATIONS         1
    4        CALCULATE INITIAL PLUME SIZE                           1
                        INPUT OPTIONS
    5        READ MET DATA FROM CARDS                               1
    6        READ HOURLY EMISSIONS                                  0
    7        SPECIFY SIGNIFICANT SOURCES                            0
    8        READ RADIAL DISTANCES TO GENERATE RECEPTORS            0
                        PRINTED OUTPUT OPTIONS
    9        DELETE EMISSIONS WITH HEIGHT TABLE                     0
   10        DELETE MET DATA SUMMARY FOR AVG PERIOD                 1
   11        DELETE HOURLY CONTRIBUTIONS                            0
   12        DELETE MET DATA ON HOURLY CONTRIBUTIONS                0
   13        DELETE FINAL PLUME RISE CALC ON HRLY CONTRIBUTIONS     0
   14        DELETE HOURLY SUMMARY                                  1
   15        DELETE MET DATA ON HRLY SUMMARY                        1
   16        DELETE FINAL PLUME RISE CALC ON HRLY SUMMARY           1
   17        DELETE AVG-PERIOD CONTRIBUTIONS                        1
   18        DELETE AVERAGING PERIOD SUMMARY                        1
   19        DELETE AVG CONCENTRATIONS AND HI-S TABLES              1
                        OTHER CONTROL AND OUTPUT OPTIONS
   20        RUN IS PART OF A SEGMENTED RUN                         0
   21        WRITE PARTIAL CONC TO DISK OR TAPE                     0
   22        WRITE HOURLY CONC TO DISK OR TAPE                      0
   23        WRITE AVG-PERIOD CONC TO DISK OR TAPE                  0
   24        PUNCH AVG-PERIOD CONC ONTO CARDS                       0

 ANEMOMETER HEIGHT=        10.00
 WIND PROFILE WITH HEIGHT EXPONENTS CORRESPONDING TO STABILITY ARE AS FOLLOWS:
      FOR STABILITY A:  .07
          STABILITY B:  .07
          STABILITY C:  .10
          STABILITY D:  .15
          STABILITY E:  .35
          STABILITY F:  .55
```

POINT SOURCE INFORMATION

SOURCE	EAST COORD (USER UNITS)	NORTH COORD (USER UNITS)	SO2(G/SEC) EMISSIONS	PART(G/SEC) EMISSIONS	STACK HT(M)	STACK TEMP(K)	STACK DIAM(M)	STACK VEL(M/SEC)	POTEN. IMPACT (MICRO G/M**3)	EFF HT(M)	GRD-LVL ELEV USER HT UNITS	BUOY FLUX F M**4/S**3
1 SRC 1 3.5	.00	.00	81.00	.00	12.8	727.6	3.5	23.5	22.74	497.65	.00	421.54
2 SRC 14 427.6	.00	.00	81.00	.00	12.8	427.6	3.5	23.5	44.56	342.93	.00	222.15

SIGNIFICANT SO2 POINT SOURCES

RANK	CHI-MAX (MICROGRAMS/M**3)	SOURCE NO.
1	44.56	2
2	22.74	1

TOTAL SO2 EMISSION AND CUMULATIVE FRACTION ACCORDING TO HEIGHT

HEIGHT(M)	TOTAL POINT EMISSIONS(G/S)	CUMULATIVE FRACTION
0 - 5	.00	.000
6 - 10	.00	.000
11 - 15	162.18	1.000
16 - 20	.00	1.000
21 - 25	.00	1.000
26 - 30	.00	1.000
31 - 35	.00	1.000
36 - 40	.00	1.000
41 - 45	.00	1.000
46 - 50	.00	1.000
51 - 55	.00	1.000
56 - 60	.00	1.000
61 - 65	.00	1.000
66 - 70	.00	1.000
71 - 75	.00	1.000
76 - 80	.00	1.000
81 - 85	.00	1.000
86 - 90	.00	1.000
91 - 95	.00	1.000
96 -100	.00	1.000
TOTAL	162.18	

ADDITIONAL INFORMATION ON SOURCES.

EMISSION INFORMATION FOR 2 (NPT) POINT SOURCES HAS BEEN INPUT
2 SIGNIFICANT POINT SOURCES(NSIGP) ARE TO BE USED FOR THIS RUN
THE ORDER OF SIGNIFICANCE(IMPS) FOR 25 OR LESS POINT SOURCES USED IN THIS RUN AS LISTED BY POINT SOURCE NUMBER:
2 1

RECEPTOR INFORMATION

RECEPTOR	IDENTIFICATION	EAST COORD	NORTH COORD	RECEPTOR HT ABV LOCAL GRD LVL	RECEPTOR GROUND LEVEL ELEVATION

		(USER UNITS)		(METERS)	(USER HT UNITS)
1	1	.100	.000	.0	.0
2	2	.200	.000	.0	.0
3	3	.300	.000	.0	.0
4	4	.400	.000	.0	.0
5	5	.500	.000	.0	.0
6	6	.600	.000	.0	.0
7	7	.700	.000	.0	.0
8	8	.800	.000	.0	.0
9	9	.900	.000	.0	.0
10	10	1.000	.000	.0	.0
11	11	1.200	.000	.0	.0
12	12	1.500	.000	.0	.0
13	13	2.000	.000	.0	.0
14	14	3.000	.000	.0	.0
15	15	4.000	.000	.0	.0
16	16	5.000	.000	.0	.0
17	17	6.000	.000	.0	.0
18	18	7.000	.000	.0	.0
19	19	8.000	.000	.0	.0
20	20	9.000	.000	.0	.0
21	21	10.000	.000	.0	.0
22	22	12.000	.000	.0	.0
23	23	15.000	.000	.0	.0
24	24	20.000	.000	.0	.0
25	25	30.000	.000	.0	.0
26	26	40.000	.000	.0	.0
27	27	50.000	.000	.0	.0

MPTER RUN FOR SENSITIVITY TEST INVOLVING 2 SOURCES AND 2 HOURS.
/PTION FOR CALCULATION OF INITIAL DISPERSION EMPLOYED.
DATA INPUT BY TOM PIERCE 30 OCTOBER 1979

SO2 CONTRIBUTION(MICROGRAMS/M**3) FROM SIGNIFICANT POINT SOURCES 79/ 299 : HOUR 1

HOUR	THETA (DEG)	SPEED (M/S)	MIXING HEIGHT(M)	TEMP (K)	STABILITY CLASS
1	270.00	5.10	2010.00	277.60	2

	1	2	3	4	5	6	7	8	9	10
FINAL HT (M)	304.76	220.56								
DIST FIN HT (KM)	1.354	1.079								

RANK	1	2	TOTAL SIGNIF POINT	TOTAL ALL POINT SOURCES
SOURCE #	2	1		
RECEP #				
1	.000	.000	.000	.000
2	.000	.000	.000	.000
3	.000	.000	.000	.000
4	.094	.000	.094	.094
5	1.697	.024	1.722	1.722
6	7.810	.348	8.167	8.167
7	18.569	1.717	20.286	20.286
8	30.927	4.711	35.638	35.638
9	41.987	9.126	51.114	51.114
10	50.335	14.225	64.560	64.560
11	58.195	23.630	81.825	81.825
12	58.121	31.131	89.252	89.252
13	47.307	32.288	79.680	79.680
14	27.746	23.270	51.016	51.016
15	17.216	15.616	32.832	32.832
16	11.543	10.860	22.403	22.403
17	8.231	7.897	16.128	16.128
18	6.153	5.973	12.125	12.125
19	4.778	4.675	9.453	9.453
20	3.841	3.781	7.622	7.622
21	3.196	3.162	6.358	6.358
22	2.436	2.426	4.862	4.862
23	1.887	1.925	3.812	3.812
24	1.477	1.476	2.953	2.953
25	1.041	1.041	2.082	2.082
26	.813	.813	1.626	1.626
27	.671	.671	1.343	1.343

MPTER RUN FOR SENSITIVITY TEST INVOLVING 2 SOURCES AND 2 HOURS.
OPTION FOR CALCULATION OF INITIAL DISPERSION EMPLOYED.
DATA INPUT BY TOM PIERCE 30 OCTOBER 1979

SO2 CONTRIBUTION(MICROGRAMS/M**3) FROM SIGNIFICANT POINT SOURCES 79/ 299 : HOUR 2

HOUR	THETA (DEG)	SPEED (M/S)	MIXING HEIGHT (M)	TEMP (K)	STABILITY CLASS
2	270.00	2.00	2000.00	277.50	1

	1	2	3	4	5	6	7	8	9	10
FINAL HT (M)	742.70	532.20								
DIST FIN HT (KM)	1.358	1.279								

RANK	1	2	TOTAL SIGNIF POINT	TOTAL ALL POINT SOURCES
SOURCE #	2	1		
RECEP #				
1	.000	.000	.000	.000
2	.000	.000	.000	.000
3	.000	.000	.000	.000
4	.002	.000	.002	.002
5	.350	.003	.353	.353
6	6.249	.273	6.522	6.522
7	24.181	3.229	27.410	27.410
8	44.006	11.682	55.688	55.688
9	54.908	22.294	77.202	77.202
10	56.534	29.999	86.532	86.532
11	47.761	33.046	80.808	80.808
12	31.371	25.677	57.048	57.048
13	19.492	18.277	37.769	37.769
14	13.992	13.545	27.537	27.537
15	11.038	10.814	21.852	21.852
16	9.158	9.025	18.178	18.178
17	7.845	7.763	15.609	15.609
18	6.882	6.826	13.708	13.708
19	6.141	6.102	12.243	12.243
20	5.553	5.524	11.077	11.077
21	5.075	5.052	10.127	10.127
22	4.341	4.327	8.669	8.669
23	3.586	3.577	7.163	7.163
24	2.901	2.797	5.598	.598
25	1.976	1.975	3.951	3.951
26	1.541	1.540	3.082	3.082
27	1.269	1.269	2.539	2.539

M21ADO*GUIDE(1).EXAMPLE2D

```
MPTER RUN FOR SENSITIVITY TEST INVOLVING 2 SOURCES AND 2 HOURS OF MET DATA.
CALCULATIONS FOR INITIAL DISPERSION AND GRADUAL PLUME RISE.
DATA INPUT BY TOM PIERCE    30 OCTOBER 1979
79,299,1,2,1,3,2,0,1.,1.,295200.
0,1,0,0,1,0,0,0,0,1,0,0,0,1,1,1,1,1,1,0,0,0,0,0
10.,.07,.07,.1,.15,.35,.55,.0,.0,.0,.0,.0,.0
SRC 1 3.5                    81.09          12.8    727.6    3.5     23.5
SRC 14 427.6                 81.09          12.8    427.6    3.5     23.5
ENDP
1       .1
2       .2
3       .3
4       .4
5       .5
6       .6
7       .7
8       .8
9       .9
10      1.
11      1.2
12      1.5
13      2.
14      3.
15      4.
16      5.
17      6.
18      7.
19      8.
20      9.
21      10.
22      12.
23      15.
24      20.
25      30.
26      40.
27      50.
ENDREC
79,299,1,2,5.,277.6,270.,2000.
79,299,2,1,2.,277.6,270.,2000.
```

```
                                   MPTER - VERSION 79365
MPTER RUN FOR SENSITIVITY TEST INVOLVING 2 SOURCES AND 2 HOURS OF MET DATA.
CALCULATIONS FOR INITIAL DISPERSION AND GRADUAL PLUME RISE.
DATA INPUT BY TOM PIERCE     30 OCTOBER 1979

                              GENERAL INPUT INFORMATION

 THIS RUN OF MPTER-VERSION 79365 IS FOR THE POLLUTANT SO2  FOR  2  1-HOUR PERIODS.
 CONCENTRATION ESTIMATES BEGIN ON HOUR- 1, JULIAN DAY-299, YEAR-1979.
 A FACTOR OF      1.0000000 HAS BEEN SPECIFIED TO CONVERT USER LENGTH UNITS TO KILOMETERS.
  2 SIGNIFICANT SOURCES ARE TO BE CONSIDERED.
  A HALF-LIFE OF  295200.00 (SECONDS) HAS BEEN ASSUMED BY THE USER.

 OPTION        OPTION LIST                    OPTION SPECIFICATION : 0= IGNORE OPTION
                                                                     1= USE OPTION
                          TECHNICAL OPTIONS
     1         TERRAIN ADJUSTMENTS                                     0
     2         DO NOT INCLUDE STACK DOWNWASH CALCULATIONS              1
     3         DO NOT INCLUDE GRADUAL PLUME RISE CALCULATIONS          0
     4         CALCULATE INITIAL PLUME SIZE                            0
                          INPUT OPTIONS
     5         READ MET DATA FROM CARDS                                1
     6         READ HOURLY EMISSIONS                                   0
     7         SPECIFY SIGNIFICANT SOURCES                             0
     8         READ RADIAL DISTANCES TO GENERATE RECEPTORS             0
                          PRINTED OUTPUT OPTIONS
     9         DELETE EMISSIONS WITH HEIGHT TABLE                      0
    10         DELETE MET DATA SUMMARY FOR AVG PERIOD                  1
    11         DELETE HOURLY CONTRIBUTIONS                             0
    12         DELETE MET DATA ON HOURLY CONTRIBUTIONS                 0
    13         DELETE FINAL PLUME RISE CALC ON HRLY CONTRIBUTIONS      0
    14         DELETE HOURLY SUMMARY                                   1
    15         DELETE MET DATA ON HRLY SUMMARY                         1
    16         DELETE FINAL PLUME RISE CALC ON HRLY SUMMARY            1
    17         DELETE AVG-PERIOD CONTRIBUTIONS                         1
    18         DELETE AVERAGING PERIOD SUMMARY                         1
    19         DELETE AVG CONCENTRATIONS AND HI-E TABLES               1
                          OTHER CONTROL AND OUTPUT OPTIONS
    20         RUN IS PART OF A SEGMENTED RUN                          0
    21         WRITE PARTIAL CONC TO DISK OR TAPE                      0
    22         WRITE HOURLY CONC TO DISK OR TAPE                       0
    23         WRITE AVG-PERIOD CONC TO DISK OR TAPE                   0
    24         PUNCH AVG-PERIOD CONC ONTO CARDS                        0

 ANEMOMETER HEIGHT-        10.00
 WIND PROFILE WITH HEIGHT EXPONENTS CORRESPONDING TO STABILITY ARE AS FOLLOWS:
      FOR STABILITY A:  .07
          STABILITY B:  .07
          STABILITY C:  .10
          STABILITY D:  .15
          STABILITY E:  .35
          STABILITY F:  .55
```

POINT SOURCE INFORMATION

SOURCE	EAST COORD (USER UNITS)	NORTH COORD (USER UNITS)	SO2(G/SEC) EMISSIONS	PART(G/SEC) EMISSIONS	STACK HT(M)	STACK TEMP(K)	STACK DIAM(M)	STACK VEL(M/SEC)	POTEN. IMPACT (MICRO G/M**3)	EFF HT(M)	GRD-LVL ELEV (USER UNITS)	BUOY FLUX F (M**4/S**3)
1 SRC 1 3.5	.00	.00	81.09	.00	12.8	727.6	3.5	23.5	22.74	497.65	.00	421.54
2 SRC 14 427.6	.00	.00	81.09	.00	12.8	427.6	3.5	23.5	44.56	342.93	.00	222.15

SIGNIFICANT SO2 POINT SOURCES

RANK	CHI-MAX (MICROGRAMS/M**3)	SOURCE NO.
1	44.56	2
2	22.74	1

TOTAL SO2 EMISSION AND CUMULATIVE FRACTION ACCORDING TO HEIGHT

HEIGHT(M)	TOTAL POINT EMISSIONS(G/S)	CUMULATIVE FRACTION
0 - 5	.00	.000
6 - 10	.00	.000
11 - 15	162.18	1.000
16 - 20	.00	1.000
21 - 25	.00	1.000
26 - 30	.00	1.000
31 - 35	.00	1.000
36 - 40	.00	1.000
41 - 45	.00	1.000
46 - 50	.00	1.000
51 - 55	.00	1.000
56 - 60	.00	1.000
61 - 65	.00	1.000
66 - 70	.00	1.000
71 - 75	.00	1.000
76 - 80	.00	1.000
81 - 85	.00	1.000
86 - 90	.00	1.000
91 - 95	.00	1.000
96 -100	.00	1.000
TOTAL	162.18	

ADDITIONAL INFORMATION ON SOURCES.

EMISSION INFORMATION FOR 2 (NPT) POINT SOURCES HAS BEEN INPUT
2 SIGNIFICANT POINT SOURCES(NSIGP) ARE TO BE USED FOR THIS RUN
THE ORDER OF SIGNIFICANCE(IMPS) FOR 25 OR LESS POINT SOURCES USED IN THIS RUN AS LISTED BY POINT SOURCE NUMBER:
2 1

RECEPTOR INFORMATION

RECEPTOR IDENTIFICATION	EAST COORD	NORTH COORD	RECEPTOR HT ABV LOCAL GRD LVL	RECEPTOR GROUND LEVEL ELEVATION

		(USER UNITS)		(METERS)	(USER HT UNITS)
1	1	.100	.000	.0	.0
2	2	.200	.000	.0	.0
3	3	.300	.000	.0	.0
4	4	.400	.000	.0	.0
5	5	.500	.000	.0	.0
6	6	.600	.000	.0	.0
7	7	.700	.000	.0	.0
8	8	.800	.000	.0	.0
9	9	.900	.000	.0	.0
10	10	1.000	.000	.0	.0
11	11	1.200	.000	.0	.0
12	12	1.500	.000	.0	.0
13	13	2.000	.000	.0	.0
14	14	3.000	.000	.0	.0
15	15	4.000	.000	.0	.0
16	16	5.000	.000	.0	.0
17	17	6.000	.000	.0	.0
18	18	7.000	.000	.0	.0
19	19	8.000	.000	.0	.0
20	20	9.000	.000	.0	.0
21	21	10.000	.000	.0	.0
22	22	12.000	.000	.0	.0
23	23	15.000	.000	.0	.0
24	24	20.000	.000	.0	.0
25	25	30.000	.000	.0	.0
26	26	40.000	.000	.0	.0
27	27	50.000	.000	.0	.0

MPTER RUN FOR SENSITIVITY TEST INVOLVING 2 SOURCES AND 2 HOURS OF MET DATA.
CALCULATIONS FOR INITIAL DISPERSION AND GRADUAL PLUME RISE.
DATA INPUT BY TOM PIERCE 30 OCTOBER 1979

SO2 CONTRIBUTION(MICROGRAMS/M**3) FROM SIGNIFICANT POINT SOURCES 79/ 299 : HOUR 1

HOUR	THETA (DEG)	SPEED (M/S)	MIXING HEIGHT (M)	TEMP (K)	STABILITY CLASS
1	270.00	5.00	2000.00	277.60	2

	1	2	3	4	5	6	7	8	9	10
FINAL HT (M)	304.76	220.56								
DIST FIN HT (KM)	1.358	1.079								

RANK	1	2	TOTAL SIGNIF POINT	TOTAL ALL POINT SOURCES
SOURCE #	2	1		
RECEP #				
1	.030	.000	.030	.030
2	2.613	.130	2.743	2.743
3	11.376	1.212	12.588	12.588
4	20.788	3.338	24.126	24.126
5	32.587	7.353	39.940	39.940
6	40.819	11.576	52.396	52.396
7	45.576	15.242	60.818	60.818
8	47.713	18.075	65.788	65.788
9	48.073	20.083	68.156	68.156
10	47.301	21.383	68.683	68.683
11	53.895	22.021	75.917	75.917
12	58.210	27.210	85.420	85.420
13	48.616	32.441	81.058	81.058
14	28.271	23.943	52.214	52.214
15	17.423	15.949	33.371	33.371
16	11.637	11.023	22.660	22.660
17	8.270	7.984	16.262	16.262
18	6.179	6.022	12.201	12.201
19	4.794	4.705	9.498	9.498
20	3.851	3.800	7.651	7.651
21	3.202	3.174	6.376	6.376
22	2.439	2.431	4.870	4.870
23	1.908	1.907	3.815	3.815
24	1.477	1.477	2.955	2.955
25	1.041	1.041	2.083	2.083
26	.813	.813	1.626	1.626
27	.671	.671	1.343	1.343

MPTER RUN FOR SENSITIVITY TEST INVOLVING 2 SOURCES AND 2 HOURS OF MET DATA.
CALCULATIONS FOR INITIAL DISPERSION AND GRADUAL PLUME RISE.
DATA INPUT BY TOM PIERCE 30 OCTOBER 1979

SO2 CONTRIBUTION(MICROGRAMS/M**3) FROM SIGNIFICANT POINT SOURCES 79/ 299 : HOUR 2

HOUR	THETA (DEG)	SPEED (M/S)	MIXING HEIGHT(M)	TEMP (K)	STABILITY CLASS
2	270.00	2.00	2000.00	277.60	1

	1	2	3	4	5	6	7	8	9	10
FINAL HT (M)	742.70	532.20								
DIST FIN HT (KM)	1.354	1.079								

RANK	1	2	TOTAL SIGNIF POINT	TOTAL ALL POINT SOURCES
SOURCE #	2	1		
RECEP #				
1	.000	.000	.000	.000
2	.000	.000	.000	.000
3	.019	.000	.019	.019
4	.798	.027	.825	.825
5	8.932	1.089	10.021	10.021
6	37.836	11.002	48.838	48.838
7	66.056	30.054	96.110	96.110
8	78.757	46.202	124.959	124.959
9	78.544	53.806	132.350	132.350
10	71.755	54.328	126.083	126.083
11	56.349	45.644	101.993	101.993
12	35.273	31.576	66.849	66.849
13	20.906	20.810	41.716	41.716
14	14.499	14.499	28.997	28.997
15	11.282	11.282	22.564	22.564
16	9.292	9.292	18.584	18.584
17	7.932	7.932	15.864	15.864
18	6.940	6.940	13.880	13.880
19	6.183	6.183	12.365	12.365
20	5.584	5.584	11.168	11.168
21	5.098	5.098	10.197	10.197
22	4.356	4.356	8.712	8.712
23	3.594	3.594	7.188	7.188
24	2.805	2.805	5.610	5.610
25	1.978	1.978	3.955	3.955
26	1.542	1.542	3.084	3.084
27	1.270	1.270	2.540	2.540

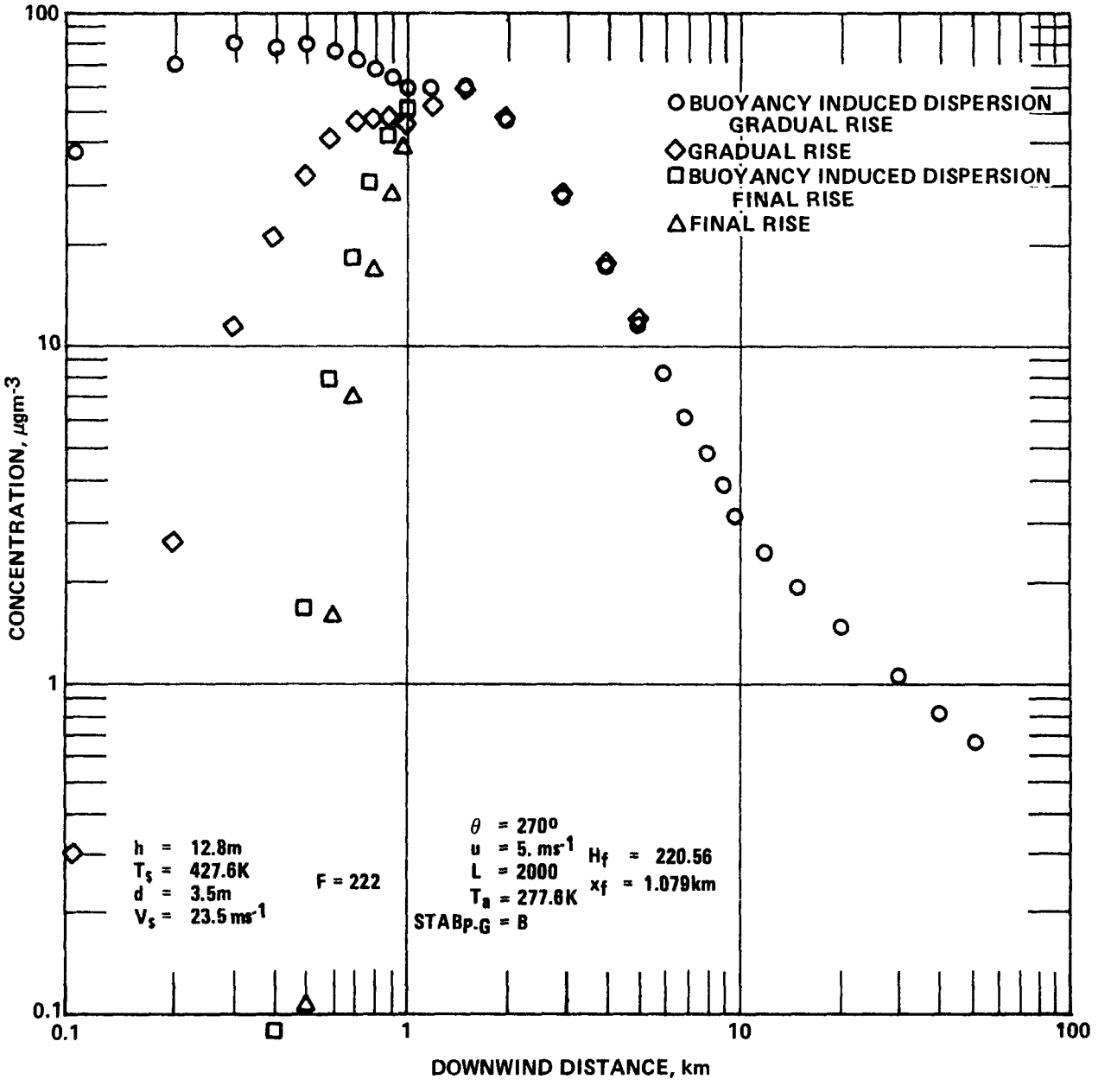

Figure 5. Concentration as function of distance for source 2, hour 1 for four runs of example 2.

M21ADO*GUIDE(1).EXAMPLE3

```
MPTER RUN FOR 366 DAYS OF DATA
MET DATA READ OFF PREPROCESSED MET DATA FILE.
DATA INPUT BY TOM PIERCE      13 APRIL 1980
64,123,1,122,24,3,4,0,1.,1.,0.
1,1,1,0,0,0,0,1,1,1,1,1,1,1,1,1,1,1,0,0,0,0,0,0
7.,.1,.15,.2,.25,.3,.3,0.,0.,0.,0.,0.,0.
STACK #1    .0                36.22          83.2    428.    3.05    19.42    150.
STACK #2                      1395.2          70.7    462.    3.96    28.19    150.
STACK #3                      1086.1         114.3    415.    3.35    28.77    150.
STACK #4                      3434.8         243.8    405.    5.91    33.83    150.
ENDP
93814 64 93815 64
0.9,1.5,2.,3.8,6.2
01        164.6     152.4     143.3     155.4     140.2
 2        167.6     167.6     175.3     201.2     140.2
 3        160.0     187.5     190.5     216.4     140.2
 4        149.4     219.5     195.1     219.5     164.6
 5        149.4     207.3     198.1     138.7     152.4
 6        146.3     167.6     176.8     149.4     146.3
 7        143.3     146.3     138.7     143.3     219.5
 8        143.3     138.7     138.7     219.5     219.5
 9        138.7     138.7     146.3     219.5     219.5
10        138.7     138.7     185.9     219.5     219.5
11        138.7     185.9     219.5     219.5     219.5
12        138.7     201.2     201.2     219.5     219.5
13        158.5     179.8     179.8     219.5     219.5
14        185.9     219.5     219.5     219.5     219.5
15        213.4     170.7     170.7     219.5     219.5
16        213.4     161.5     164.6     219.5     219.5
17        182.9     219.5     167.6     219.5     219.5
18        155.4     198.1     176.8     219.5     219.5
19        143.3     143.3     198.1     219.5     213.4
20        138.7     182.9     204.2     185.9     219.5
21        138.7     219.5     219.5     179.8     219.5
22        138.7     213.4     219.5     185.9     158.5
23        138.7     138.7     150.9     140.2     138.7
24        140.2     138.7     138.7     140.2     140.2
25        140.2     140.2     143.3     146.3     170.7
26        143.3     140.2     140.2     140.2     219.5
27        146.3     140.2     138.7     140.2     155.4
28        152.4     141.7     138.7     143.3     138.7
29        161.5     144.8     140.2     146.3     143.3
30        185.9     140.2     140.2     149.4     158.5
31        219.5     140.2     143.3     149.4     167.6
32        205.7     140.2     143.3     146.3     219.5
33        192.0     143.3     143.3     143.3     198.1
34        179.8     140.2     143.3     143.3     189.0
35        170.7     140.2     143.3     146.3     182.9
36        164.6     140.2     143.3     146.3     146.3
ENDREC
```

```
                                   MPTER - VERSION 79365
MPTER RUN FOR 366 DAYS OF DATA
MET DATA READ OF UNIT 11, HRLY CONCS WRITTEN TO UNIT 12
DATA INPUT BY TOM PIERCE      10 FEBRUARY 1980

                              GENERAL INPUT INFORMATION

 THIS RUN OF MPTER-VERSION 79365 IS FOR THE POLLUTANT SO 2  FOR 366  24-HOUR PERIODS.
 CONCENTRATION ESTIMATES BEGIN ON HOUR- 1, JULIAN DAY-  1, YEAR-1964.
 A FACTOR OF       1.0000000 HAS BEEN SPECIFIED TO CONVERT USER LENGTH UNITS TO KILOMETERS.
  4 SIGNIFICANT SOURCES ARE TO BE CONSIDERED.
THIS RUN WILL NOT CONSIDER ANY POLLUTANT LOSS.
 HIGH-FIVE SUMMARY CONCENTRATION TABLES WILL BE OUTPUT FOR   4 AVERAGING PERIODS.
 AVG TIMES OF 1,3,8, AND 24 HOURS ARE AUTOMATICALLY DISPLAYED.
  A FACTOR OF       1.0000000 HAS BEEN SPECIFIED TO CONVERT USER HEIGHT UNITS TO METERS.

 OPTION       OPTION LIST                    OPTION SPECIFICATION : 0= IGNORE OPTION
                                                                    1= USE OPTION
                          TECHNICAL OPTIONS
      1       TERRAIN ADJUSTMENTS                                   1
      2       DO NOT INCLUDE STACK DOWNWASH CALCULATIONS            1
      3       DO NOT INCLUDE GRADUAL PLUME RISE CALCULATIONS        1
      4       CALCULATE INITIAL PLUME SIZE                          0
                           INPUT OPTIONS
      5       READ MET DATA FROM CARDS                              0
      6       READ HOURLY EMISSIONS                                 0
      7       SPECIFY SIGNIFICANT SOURCES                           0
      8       READ RADIAL DISTANCES TO GENERATE RECEPTORS           1
                          PRINTED OUTPUT OPTIONS
      9       DELETE EMISSIONS WITH HEIGHT TABLE                    1
     10       DELETE MET DATA SUMMARY FOR AVG PERIOD                1
     11       DELETE HOURLY CONTRIBUTIONS                           1
     12       DELETE MET DATA ON HOURLY CONTRIBUTIONS               1
     13       DELETE FINAL PLUME RISE CALC ON HRLY CONTRIBUTIONS    1
     14       DELETE HOURLY SUMMARY                                 1
     15       DELETE MET DATA ON HRLY SUMMARY                       1
     16       DELETE FINAL PLUME RISE CALC ON HRLY SUMMARY          1
     17       DELETE AVG-PERIOD CONTRIBUTIONS                       1
     18       DELETE AVERAGING PERIOD SUMMARY                       1
     19       DELETE AVG CONCENTRATIONS AND HI-5 TABLES             0
                          OTHER CONTROL AND OUTPUT OPTIONS
     20       RUN IS PART OF A SEGMENTED RUN                        0
     21       WRITE PARTIAL CONC TO DISK OR TAPE                    0
     22       WRITE HOURLY CONC TO DISK OR TAPE                     1
     23       WRITE AVG-PERIOD CONC TO DISK OR TAPE                 0
     24       PUNCH AVG-PERIOD CONC ONTO CARDS                      0

 ANEMOMETER HEIGHT IS:       7.00
 EXPONENTS FOR POWER- LAW WIND INCREASE WITH HEIGHT ARE : .10, .15, .20, .25, .30, .30
 TERRAIN ADJUSTMENTS ARE:  .000, .000, .000, .000, .000, .000
```

POINT SOURCE INFORMATION

SOURCE	EAST COORD (USER UNITS)	NORTH COORD (USER UNITS)	SO2(G/SEC) EMISSIONS	PART(G/SEC) EMISSIONS	STACK HT(M)	STACK TEMP(K)	STACK DIAM(M)	STACK VEL(M/SEC)	POTEN. (MICRO G/M**3)	IMPACT	EFF HT(M)	GRD-LVL ELEV USER HT UNITS	BUOYF LUX F **4/S**3
1 STACK #1	.00	.00	36.22	.00	83.2	428.0	3.1	19.8		20.97	333.12	150.00	139.69
2 STACK #2	.00	.00	1395.20	.00	70.7	462.0	4.0	28.2		339.94	538.01	150.00	396.43
3 STACK #3	.00	.00	1086.10	.00	114.3	415.0	3.3	28.8		359.83	453.74	150.00	232.69
4 STACK #4	.00	.00	3438.80	.00	247.8	405.0	5.0	33.8		296.86	956.50	150.00	801.08

SIGNIFICANT SO2 POINT SOURCES

RANK	CHI-MAX (MICROGRAMS/M**3)	SOURCE NO.
1	359.83	3
2	339.94	2
3	296.86	4
4	20.97	1

ADDITIONAL INFORMATION ON SOURCES.

EMISSION INFORMATION FOR 4 (NPT) POINT SOURCES HAS BEEN INPUT
4 SIGNIFICANT POINT SOURCES(NSIGP) ARE TO BE USED FOR THIS RUN
THE ORDER OF SIGNIFICANCE(IMPS) FOR 25 OR LESS POINT SOURCES USED IN THIS RUN AS LISTED BY POINT SOURCE NUMBER:
3 2 4 1
SURFACE MET DATA FROM STATION(ISFCD) 93814, YEAR(ISFCYR) 1964
MIXING HEIGHT DATA FROM STATION(IMXD) 93815, YEAR(IMXYR) 1964

RECEPTOR INFORMATION

MPTER INTERNALLY GENERATES 36 RECEPTORS ON A CIRCLE CORRESPONDING TO EACH NON-ZERO RADIAL DISTANCE FROM A CENTER POINT
COORDINATES ARE (USER UNITS): (.000, .000)
RADIAL DISTANCE(S) USER SPECIFIED (USER UNITS): .900 1.500 2.000 3.800 6.200

RECEPTOR	IDENTIFICATION	EAST COORD (USER UNITS)	NORTH COORD (USER UNITS)	RECEPTOR HT ABV LOCAL GRD LVL (METERS)	RECEPTOR GROUND LEVEL ELEVATION (USER HT UNITS)
1	10, .9	.156	.886	.0	164.6
2	20, .9	.308	.846	.0	167.6
3	30, .9	.450	.779	.0	160.0
4 *	40, .9	.579	.689	.0	160.4
5 *	50, .9	.689	.579	.0	140.8
6 *	60, .9	.779	.450	.0	146.7
7 *	70, .9	.846	.308	.0	143.3
8 *	80, .9	.886	.156	.0	143.3
9 *	90, .9	.900	.000	.0	138.7
10 *	100, .9	.886	-.156	.0	138.7
11 *	110, .9	.846	-.308	.0	138.7
12 *	120, .9	.779	-.450	.0	138.7
13	130, .9	.689	-.579	.0	158.5
14	140, .9	.579	-.689	.0	185.8
15	150, .9	.450	-.779	.0	213.8
16	160, .9	.308	-.846	.0	213.8

17	170,	.9	.156	-.886	.0	182.9
18	180,	.9	.000	-.900	.0	155.4
19 *	190,	.9	-.156	-.886	.0	143.3
20 *	200,	.9	-.308	-.846	.0	138.7
21 *	210,	.9	-.450	-.779	.0	138.7
22 *	220,	.9	-.579	-.689	.0	138.7
23 *	230,	.9	-.689	-.579	.0	138.7
24 *	240,	.9	-.779	-.450	.0	140.2
25 *	250,	.9	-.846	-.308	.0	140.2
26 *	260,	.9	-.886	-.156	.0	143.3
27 *	270,	.9	-.900	.000	.0	146.7
28	280,	.9	-.886	.156	.0	152.4
29	290,	.9	-.846	.308	.0	161.5
30	300,	.9	-.779	.450	.0	185.9
31	310,	.9	-.689	.579	.0	219.5
32	320,	.9	-.579	.689	.0	205.7
33	330,	.9	-.450	.779	.0	192.0
34	340,	.9	-.308	.846	.0	179.8
35	350,	.9	-.156	.886	.0	170.7
36	360,	.9	.000	.900	.0	164.6
37	10,	1.5	.260	1.477	.0	152.4
38	20,	1.5	.513	1.410	.0	167.6
39	30,	1.5	.750	1.299	.0	187.5
40	40,	1.5	.964	1.149	.0	219.5
41	50,	1.5	1.149	.964	.0	207.3
42	60,	1.5	1.299	.750	.0	167.6
43 *	70,	1.5	1.410	.513	.0	146.3
44 *	80,	1.5	1.477	.260	.0	138.7
45 *	90,	1.5	1.500	.000	.0	138.7
46 *	100,	1.5	1.477	-.260	.0	138.7
47	110,	1.5	1.410	-.513	.0	185.9
48	120,	1.5	1.299	-.750	.0	201.2
49	130,	1.5	1.149	-.964	.0	179.8
50	140,	1.5	.964	-1.149	.0	219.5
51	150,	1.5	.750	-1.299	.0	170.7
52	160,	1.5	.513	-1.410	.0	161.5
53	170,	1.5	.260	-1.477	.0	219.5
54	180,	1.5	.000	-1.500	.0	198.1
55 *	190,	1.5	-.260	-1.477	.0	143.3
56	200,	1.5	-.513	-1.410	.0	182.9
57	210,	1.5	-.750	-1.299	.0	219.5
58	220,	1.5	-.964	-1.149	.0	213.4
59 *	230,	1.5	-1.149	-.964	.0	138.7
60 *	240,	1.5	-1.299	-.750	.0	138.7
61 *	250,	1.5	-1.410	-.513	.0	140.2
62 *	260,	1.5	-1.477	-.260	.0	140.2
63 *	270,	1.5	-1.500	.000	.0	140.2
64 *	280,	1.5	-1.477	.260	.0	141.7
65 *	290,	1.5	-1.410	.513	.0	144.8
66 *	300,	1.5	-1.299	.750	.0	140.2
67 *	310,	1.5	-1.149	.964	.0	140.2
68 *	320,	1.5	-.964	1.149	.0	140.2
69 *	330,	1.5	-.750	1.299	.0	143.3
70 *	340,	1.5	-.513	1.410	.0	140.2
71 *	350,	1.5	-.260	1.477	.0	140.7
72 *	360,	1.5	.000	1.500	.0	140.2
73 *	10,	2.0	.347	1.970	.0	143.4

74	20, 2.0	.684	1.879	.0	175.3
75	30, 2.0	1.000	1.732	.0	190.5
76	40, 2.0	1.286	1.532	.0	195.1
77	50, 2.0	1.532	1.286	.0	198.1
78	60, 2.0	1.732	1.000	.0	176.8
79 *	70, 2.0	1.879	.684	.0	138.7
80 *	80, 2.0	1.970	.347	.0	138.7
81 *	90, 2.0	2.000	.000	.0	146.7
82	100, 2.0	1.970	-.347	.0	185.9
83	110, 2.0	1.879	-.684	.0	219.5
84	120, 2.0	1.732	-1.000	.0	201.2
85	130, 2.0	1.532	-1.286	.0	179.8
86	140, 2.0	1.286	-1.532	.0	219.5
87	150, 2.0	1.000	-1.732	.0	170.7
88	160, 2.0	.684	-1.879	.0	164.6
89	170, 2.0	.347	-1.970	.0	167.6
90	180, 2.0	.000	-2.000	.0	176.8
91	190, 2.0	-.347	-1.970	.0	198.1
92	200, 2.0	-.684	-1.879	.0	204.2
93	210, 2.0	-1.000	-1.732	.0	219.5
94	220, 2.0	-1.286	-1.532	.0	219.5
95	230, 2.0	-1.532	-1.286	.0	150.9
96 *	240, 2.0	-1.732	-1.000	.0	138.7
97 *	250, 2.0	-1.879	-.684	.0	143.3
98 *	260, 2.0	-1.970	-.347	.0	140.2
99 *	270, 2.0	-2.000	.000	.0	138.7
100 *	280, 2.0	-1.970	.347	.0	138.7
101 *	290, 2.0	-1.879	.684	.0	140.2
102 *	300, 2.0	-1.732	1.000	.0	140.2
103 *	310, 2.0	-1.532	1.286	.0	143.3
104 *	320, 2.0	-1.286	1.532	.0	143.3
105 *	330, 2.0	-1.000	1.732	.0	143.3
106 *	340, 2.0	-.684	1.879	.0	143.3
107 *	350, 2.0	-.347	1.970	.0	143.3
108 *	360, 2.0	.000	2.000	.0	143.3
109	10, 3.8	.660	3.742	.0	155.4
110	20, 3.8	1.300	3.571	.0	201.2
111	30, 3.8	1.900	3.291	.0	216.4
112	40, 3.8	2.443	2.911	.0	219.5
113 *	50, 3.8	2.911	2.443	.0	138.7
114 *	60, 3.8	3.291	1.900	.0	140.4
115 *	70, 3.8	3.571	1.300	.0	143.3
116	80, 3.8	3.742	.660	.0	219.5
117	90, 3.8	3.800	.000	.0	219.5
118	100, 3.8	3.742	-.660	.0	219.5
119	110, 3.8	3.571	-1.300	.0	219.5
120	120, 3.8	3.291	-1.900	.0	219.5
121	130, 3.8	2.911	-2.443	.0	219.5
122	140, 3.8	2.443	-2.911	.0	219.5
123	150, 3.8	1.900	-3.291	.0	219.5
124	160, 3.8	1.300	-3.571	.0	219.5
125	170, 3.8	.660	-3.742	.0	219.5
126	180, 3.8	.000	-3.800	.0	219.5
127	190, 3.8	-.660	-3.742	.0	219.5
128	200, 3.8	-1.300	-3.571	.0	185.9
129	210, 3.8	-1.900	-3.291	.0	179.8
130	220, 3.8	-2.443	-2.911	.0	185.9

131 *	230, 3.8	-2.911	-2.443	.0	140.2
132 *	240, 3.8	-3.291	-1.900	.0	140.2
133 *	250, 3.8	-3.571	-1.300	.0	146.3
134 *	260, 3.8	-3.742	-.660	.0	140.2
135 *	270, 3.8	-3.800	.000	.0	140.2
136 *	280, 3.8	-3.742	.660	.0	143.3
137 *	290, 3.8	-3.571	1.300	.0	146.3
138 *	300, 3.8	-3.291	1.900	.0	149.8
139 *	310, 3.8	-2.911	2.443	.0	149.8
140 *	320, 3.8	-2.443	2.911	.0	146.3
141 *	330, 3.8	-1.900	3.291	.0	143.3
142 *	340, 3.8	-1.300	3.571	.0	143.3
143 *	350, 3.8	-.660	3.742	.0	146.3
144 *	360, 3.8	.000	3.800	.0	146.3
145 *	10, 6.2	1.077	6.106	.0	140.2
146 *	20, 6.2	2.121	5.826	.0	140.2
147 *	30, 6.2	3.100	5.369	.0	140.2
148	40, 6.2	3.985	4.749	.0	164.6
149	50, 6.2	4.749	3.985	.0	152.8
150 *	60, 6.2	5.369	3.100	.0	146.3
151	70, 6.2	5.826	2.121	.0	219.5
152	80, 6.2	6.106	1.077	.0	219.5
153	90, 6.2	6.200	.000	.0	219.5
154	100, 6.2	6.106	-1.077	.0	219.5
155	110, 6.2	5.826	-2.121	.0	219.5
156	120, 6.2	5.369	-3.100	.0	219.5
157	130, 6.2	4.749	-3.985	.0	219.5
158	140, 6.2	3.985	-4.749	.0	219.5
159	150, 6.2	3.100	-5.369	.0	219.5
160	160, 6.2	2.121	-5.826	.0	219.5
161	170, 6.2	1.077	-6.106	.0	219.5
162	180, 6.2	.000	-6.200	.0	219.5
163	190, 6.2	-1.077	-6.106	.0	213.8
164	200, 6.2	-2.121	-5.826	.0	219.5
165	210, 6.2	-3.100	-5.369	.0	219.5
166	220, 6.2	-3.985	-4.749	.0	158.5
167 *	230, 6.2	-4.749	-3.985	.0	138.7
168 *	240, 6.2	-5.369	-3.100	.0	140.2
169	250, 6.2	-5.826	-2.121	.0	170.7
170	260, 6.2	-6.106	-1.077	.0	219.5
171	270, 6.2	-6.200	.000	.0	155.8
172 *	280, 6.2	-6.106	1.077	.0	138.7
173 *	290, 6.2	-5.826	2.121	.0	143.3
174	300, 6.2	-5.369	3.100	.0	158.5
175	310, 6.2	-4.749	3.985	.0	167.6
176	320, 6.2	-3.985	4.749	.0	219.5
177	330, 6.2	-3.100	5.369	.0	198.1
178	340, 6.2	-2.121	5.826	.0	189.0
179	350, 6.2	-1.077	6.106	.0	182.8
180 *	360, 6.2	.000	6.200	.0	146.3

* ONE ASTERISK INDICATES THAT THE ASSOCIATED RECEPTOR(S) HAVE A GROUND LEVEL ELEVATION LOWER THAN THE LOWEST SOURCE BASE ELEVATION. CAUTION SHOULD BE USED IN INTERPRETING CONCENTRATIONS FOR THESE RECEPTORS.

** TWO ASTERISKS INDICATE THAT THE ASSOCIATED RECEPTOR(S) HAVE GROUND LEVEL ELEVATIONS ABOVE THE LOWEST STACK TOP. CONSEQUENTLY NO CALCULATIONS WILL BE PERFORMED WITH THIS RECEPTOR. A SERIES OF ASTERISKS WILL INSTEAD APPEAR IN THE OUTPUT.

MPTER - VERSION 79365

MPTER RUN FOR 366 DAYS OF DATA
MET DATA READ OF UNIT 11, HRLY CONCS WRITTEN TO UNIT 12
DATA INPUT BY TOM PIERCE 10 FEBRUARY 1980

RECEPTORS

RECEPTOR	IDENTIFICATION	EAST COORD (USER UNITS)	NORTH COORD	RECEPTOR HT ABV LOCAL GRD LVL (METERS)	RECEPTOR GROUND LEVEL ELEVATION (USER HT UNITS)	AVG CONC FOR PERIOD DAY 1 HR 1. TO DAY 366. HR 1. (MICROGRAMS/M**3)
1	10, .9	.16	.89	.0	164.6	1.46
2	20, .9	.31	.85	.0	167.6	1.24
3	30, .9	.45	.78	.0	160.0	.90
4	40, .9	.58	.69	.0	149.4	.69
5	50, .9	.69	.58	.0	149.4	.81
6	60, .9	.78	.45	.0	146.3	.86
7	70, .9	.85	.31	.0	143.3	.73
8	80, .9	.89	.16	.0	143.3	.55
9	90, .9	.90	.00	.0	138.7	.41
10	100, .9	.89	-.16	.0	138.7	.38
11	110, .9	.85	-.31	.0	138.7	.49
12	120, .9	.78	-.45	.0	138.7	.93
13	130, .9	.69	-.58	.0	158.5	1.75
14	140, .9	.58	-.69	.0	185.9	2.27
15	150, .9	.45	-.78	.0	213.4	2.32
16	160, .9	.31	-.85	.0	213.4	1.67
17	170, .9	.16	-.89	.0	182.9	.59
18	180, .9	.00	-.90	.0	155.4	.34
19	190, .9	-.16	-.89	.0	143.3	.32
20	200, .9	-.31	-.85	.0	138.7	.41
21	210, .9	-.45	-.78	.0	138.7	.74
22	220, .9	-.58	-.69	.0	138.7	1.27
23	230, .9	-.69	-.58	.0	138.7	1.76
24	240, .9	-.78	-.45	.0	140.2	1.85
25	250, .9	-.85	-.31	.0	140.2	1.55
26	260, .9	-.89	-.16	.0	143.3	1.28
27	270, .9	-.90	.00	.0	146.3	1.10
28	280, .9	-.89	.16	.0	152.4	.79
29	290, .9	-.85	.31	.0	161.5	.47
30	300, .9	-.78	.45	.0	185.9	.60
31	310, .9	-.69	.58	.0	219.5	1.84
32	320, .9	-.58	.69	.0	205.7	1.85
33	330, .9	-.45	.78	.0	192.0	1.37
34	340, .9	-.31	.85	.0	170.8	1.00
35	350, .9	-.16	.89	.0	170.7	1.25
36	360, .9	.00	.90	.0	164.6	1.56
37	10, 1.5	.26	1.48	.0	152.4	2.42
38	20, 1.5	.51	1.41	.0	167.6	3.89
39	30, 1.5	.75	1.30	.0	187.5	7.07
40	40, 1.5	.96	1.15	.0	219.5	18.72
41	50, 1.5	1.15	.96	.0	207.3	12.19
42	60, 1.5	1.30	.75	.0	167.6	6.28
43	70, 1.5	1.41	.51	.0	146.3	4.79
44	80, 1.5	1.48	.26	.0	138.7	3.00
45	90, 1.5	1.50	.00	.0	138.7	1.88
46	100, 1.5	1.48	-.26	.0	138.7	1.50

47	110, 1.5	1.41	-.51	.0	185.9	4.11
48	120, 1.5	1.30	-.75	.0	201.2	6.67
49	130, 1.5	1.15	-.96	.0	179.8	4.74
50	140, 1.5	.96	-1.15	.0	219.5	8.46
51	150, 1.5	.75	-1.30	.0	170.7	2.97
52	160, 1.5	.51	-1.41	.0	161.5	2.13
53	170, 1.5	.26	-1.48	.0	219.5	5.33
54	180, 1.5	.00	-1.50	.0	198.1	3.00
55	190, 1.5	-.26	-1.48	.0	143.3	1.27
56	200, 1.5	-.51	-1.41	.0	182.9	2.86
57	210, 1.5	-.75	-1.30	.0	219.5	5.82
58	220, 1.5	-.96	-1.15	.0	213.4	6.21
59	230, 1.5	-1.15	-.96	.0	138.7	3.53
60	240, 1.5	-1.30	-.75	.0	138.7	3.92
61	250, 1.5	-1.41	-.51	.0	140.2	3.42
62	260, 1.5	-1.48	-.26	.0	140.2	2.57
63	270, 1.5	-1.50	.00	.0	140.2	2.56
64	280, 1.5	-1.48	.26	.0	141.7	2.51
65	290, 1.5	-1.41	.51	.0	144.8	1.98
66	300, 1.5	-1.30	.75	.0	140.2	1.64
67	310, 1.5	-1.15	.96	.0	140.2	2.04
68	320, 1.5	-.96	1.15	.0	140.2	2.38
69	330, 1.5	-.75	1.30	.0	143.3	2.10
70	340, 1.5	-.51	1.41	.0	140.2	1.75
71	350, 1.5	-.26	1.48	.0	140.2	1.90
72	360, 1.5	.00	1.50	.0	140.2	2.06
73	10, 2.0	.35	1.97	.0	143.3	3.22
74	20, 2.0	.68	1.88	.0	175.3	6.96
75	30, 2.0	1.00	1.73	.0	190.5	12.22
76	40, 2.0	1.29	1.53	.0	195.1	14.56
77	50, 2.0	1.53	1.29	.0	198.1	14.07
78	60, 2.0	1.73	1.00	.0	176.8	10.87
79	70, 2.0	1.88	.68	.0	138.7	7.26
80	80, 2.0	1.97	.35	.0	138.7	4.97
81	90, 2.0	2.00	.00	.0	186.3	3.56
82	100, 2.0	1.97	-.35	.0	185.9	5.28
83	110, 2.0	1.88	-.68	.0	219.5	13.83
84	120, 2.0	1.73	-1.00	.0	201.2	9.47
85	130, 2.0	1.53	-1.29	.0	179.8	6.29
86	140, 2.0	1.29	-1.53	.0	219.5	11.03
87	150, 2.0	1.00	-1.73	.0	170.7	4.12
88	160, 2.0	.68	-1.88	.0	164.6	3.39
89	170, 2.0	.35	-1.97	.0	167.6	3.35
90	180, 2.0	.00	-2.00	.0	176.8	3.28
91	190, 2.0	-.35	-1.97	.0	198.1	4.71
92	200, 2.0	-.68	-1.88	.0	204.2	6.10
93	210, 2.0	-1.00	-1.73	.0	219.5	7.39
94	220, 2.0	-1.29	-1.53	.0	219.5	8.41
95	230, 2.0	-1.53	-1.29	.0	150.9	4.79
96	240, 2.0	-1.73	-1.00	.0	138.7	5.07
97	250, 2.0	-1.88	-.68	.0	143.3	4.57
98	260, 2.0	-1.97	-.35	.0	140.2	3.19
99	270, 2.0	-2.00	.00	.0	138.7	3.40
100	280, 2.0	-1.97	.35	.0	138.7	3.47
101	290, 2.0	-1.88	.68	.0	140.2	3.03
102	300, 2.0	-1.73	1.00	.0	140.2	2.04
103	310, 2.0	-1.53	1.29	.0	143.3	3.34

104	320, 2.0	-1.29	1.53	.0	143.3	3.67
105	330, 2.0	-1.00	1.73	.0	143.3	3.11
106	340, 2.0	-.68	1.89	.0	143.3	2.64
107	350, 2.0	-.35	1.97	.0	143.3	2.76
108	360, 2.0	.00	2.00	.0	143.3	2.02
109	10, 3.8	.66	3.74	.0	155.4	5.22
110	20, 3.8	1.30	3.57	.0	201.2	17.50
111	30, 3.8	1.90	3.29	.0	216.4	32.54
112	40, 3.8	2.44	2.91	.0	219.5	* 34.15
113	50, 3.8	2.91	2.44	.0	138.7	9.30
114	60, 3.8	3.29	1.90	.0	149.4	11.13
115	70, 3.8	3.57	1.30	.0	143.3	11.69
116	80, 3.8	3.74	.66	.0	219.5	21.00
117	90, 3.8	3.80	.00	.0	219.5	19.03
118	100, 3.8	3.74	-.66	.0	219.5	14.00
119	110, 3.8	3.57	-1.30	.0	219.5	10.16
120	120, 3.8	3.29	-1.90	.0	219.5	17.79
121	130, 3.8	2.91	-2.44	.0	219.5	15.10
122	140, 3.8	2.44	-2.91	.0	219.5	13.34
123	150, 3.8	1.90	-3.29	.0	219.5	11.02
124	160, 3.8	1.30	-3.57	.0	219.5	10.30
125	170, 3.8	.66	-3.74	.0	219.5	9.38
126	180, 3.8	.00	-3.80	.0	219.5	9.03
127	190, 3.8	-.66	-3.74	.0	219.5	9.35
128	200, 3.8	-1.30	-3.57	.0	185.9	6.48
129	210, 3.8	-1.90	-3.29	.0	179.8	5.54
130	220, 3.8	-2.44	-2.91	.0	185.9	6.40
131	230, 3.8	-2.91	-2.44	.0	140.2	5.47
132	240, 3.8	-3.29	-1.90	.0	140.2	6.86
133	250, 3.8	-3.57	-1.30	.0	146.3	5.89
134	260, 3.8	-3.74	-.66	.0	140.2	3.00
135	270, 3.8	-3.80	.00	.0	140.2	4.38
136	280, 3.8	-3.74	.66	.0	143.3	4.41
137	290, 3.8	-3.57	1.30	.0	146.3	4.55
138	300, 3.8	-3.29	1.90	.0	149.4	5.07
139	310, 3.8	-2.91	2.44	.0	149.4	4.96
140	320, 3.8	-2.44	2.91	.0	146.3	5.30
141	330, 3.8	-1.90	3.29	.0	143.3	4.77
142	340, 3.8	-1.30	3.57	.0	143.3	4.16
143	350, 3.8	-.66	3.74	.0	146.3	4.39
144	360, 3.8	.00	3.80	.0	146.3	5.01
145	10, 6.2	1.08	6.11	.0	140.2	5.43
146	20, 6.2	2.12	5.83	.0	140.2	8.75
147	30, 6.2	3.10	5.37	.0	140.2	11.52
148	40, 6.2	3.99	4.75	.0	164.6	15.32
149	50, 6.2	4.75	3.99	.0	152.4	10.59
150	60, 6.2	5.37	3.10	.0	146.3	10.50
151	70, 6.2	5.83	2.12	.0	219.5	22.06
152	80, 6.2	6.11	1.08	.0	219.5	17.05
153	90, 6.2	6.20	.00	.0	219.5	16.88
154	100, 6.2	6.11	-1.08	.0	219.5	12.01
155	110, 6.2	5.83	-2.12	.0	219.5	15.71
156	120, 6.2	5.37	-3.10	.0	219.5	15.62
157	130, 6.2	4.75	-3.99	.0	219.5	13.46
158	140, 6.2	3.99	-4.75	.0	219.5	11.69
159	150, 6.2	3.10	-5.37	.0	219.5	9.72
160	160, 6.2	2.12	-5.83	.0	219.5	9.98

161	170, 6.2	1.08	-6.11	.0	219.5	8.72
162	180, 6.2	.00	-6.20	.0	219.5	8.59
163	190, 6.2	-1.08	-6.11	.0	217.4	8.23
164	200, 6.2	-2.12	-5.83	.0	219.5	9.35
165	210, 6.2	-3.10	-5.37	.0	219.5	7.34
166	220, 6.2	-3.99	-4.75	.0	158.5	4.70
167	230, 6.2	-4.75	-3.99	.0	138.7	5.05
168	240, 6.2	-5.37	-3.10	.0	180.2	6.34
169	250, 6.2	-5.83	-2.12	.0	170.7	6.31
170	260, 6.2	-6.11	-1.08	.0	219.5	9.53
171	270, 6.2	-6.20	.00	.0	155.4	4.10
172	280, 6.2	-6.11	1.08	.0	138.7	3.54
173	290, 6.2	-5.83	2.12	.0	183.7	3.91
174	300, 6.2	-5.37	3.10	.0	158.5	5.09
175	310, 6.2	-4.75	3.99	.0	167.6	5.19
176	320, 6.2	-3.99	4.75	.0	219.5	10.26
177	330, 6.2	-3.10	5.37	.0	198.1	7.89
178	340, 6.2	-2.12	5.83	.0	189.0	5.65
179	350, 6.2	-1.08	6.11	.0	182.9	5.50
180	360, 6.2	.00	6.20	.0	186.3	5.15

FIVE HIGHEST 1-HOUR SO2 CONCENTRATIONS(ENDING ON JULIAN DAY, HOUR)
(MICROGRAMS/M**3)

RECEPTOR			1		2		3		4		5	
1(	.16,	.89)	1921.54	(139,11)	1759.14	(209,13)	1716.93	(164,11)	1612.90	(199,13)	1502.48	(199,11)
2(	.31,	.85)	1943.64	(139,11)	1735.63	(164,11)	1675.12	(207,12)	891.12	(139,12)	649.72	(209,13)
3(	.45,	.78)	1749.76	(207,12)	1011.13	(139,12)	882.07	(139,11)	751.05	(164,11)	534.57	(185,14)
4(	.58,	.69)	1543.57	(185,14)	823.68	(207,12)	739.09	(142,13)	482.45	(139,12)	199.61	(160,14)
5(	.69,	.58)	2073.02	(185,14)	950.98	(142,13)	763.33	(198,12)	543.44	(174,11)	297.25	(174,13)
6(	.78,	.45)	1759.64	(198,12)	1310.56	(185,14)	961.07	(174,11)	513.86	(142,13)	264.25	(174,13)
7(	.85,	.31)	1871.91	(198,12)	739.05	(174,11)	351.69	(185,14)	320.45	(219,13)	284.65	(247,12)
8(	.89,	.16)	943.89	(198,12)	884.63	(136,12)	847.87	(219,13)	233.10	(174,11)	195.73	(210,14)
9(	.90,	.00)	1731.47	(136,12)	901.00	(219,13)	182.53	(198,12)	111.05	(210,14)	89.84	(205,11)
10(	.89,	-.16)	1607.16	(136,12)	648.42	(205,11)	410.61	(219,13)	113.90	(223,13)	92.42	(247,14)
11(	.85,	-.31)	1659.09	(205,11)	680.95	(136,12)	315.11	(136,11)	258.47	(247,14)	218.10	(185,12)
12(	.78,	-.45)	1924.26	(205,11)	1202.42	(136,11)	949.11	(185,13)	946.90	(185,12)	797.21	(187,11)
13(	.69,	-.58)	2042.40	(136,11)	2032.43	(185,13)	1862.62	(187,11)	1783.56	(185,12)	1600.84	(203,12)
14(	.58,	-.69)	2369.69	(203,12)	2093.85	(185,13)	2066.00	(187,11)	2020.61	(142,12)	1664.65	(136,11)
15(	.45,	-.78)	2330.71	(150,11)	2232.67	(142,12)	2017.06	(203,11)	1678.66	(203,12)	1324.75	(142,14)
16(	.31,	-.85)	1507.55	(150,11)	1339.64	(203,11)	1063.65	(142,12)	1041.10	(142,14)	813.12	(135,13)
17(	.16,	-.89)	837.31	(208,13)	580.29	(150,12)	369.80	(150,11)	360.74	(203,11)	360.12	(179,14)
18(	.00,	-.90)	1625.71	(208,13)	351.72	(150,12)	143.23	(179,11)	114.44	(163,14)	94.87	(168,14)
19(	-.16,	-.89)	1542.87	(208,13)	652.30	(163,14)	89.12	(168,14)	69.75	(150,12)	67.05	(204,12)
20(	-.31,	-.85)	1424.36	(143,14)	679.71	(208,13)	513.35	(204,12)	266.84	(146,13)	120.15	(177,14)
21(	-.45,	-.78)	1424.36	(163,14)	1364.42	(204,12)	1097.32	(146,13)	637.68	(228,13)	456.58	(207,14)
22(	-.58,	-.69)	1861.82	(146,13)	1591.66	(204,12)	1424.35	(228,13)	1327.16	(207,14)	1105.91	(201,11)
23(	-.69,	-.58)	1767.52	(222,13)	1671.95	(207,14)	1631.40	(201,11)	1489.65	(146,13)	1424.35	(228,13)
24(	-.78,	-.45)	1817.70	(143,14)	1651.12	(222,13)	1619.27	(202,11)	1585.13	(178,13)	1533.45	(115,13)
25(	-.85,	-.31)	1864.58	(177,11)	1817.70	(143,14)	1306.67	(115,13)	1187.90	(202,11)	1061.87	(179,12)
26(	-.89,	-.16)	1966.74	(179,12)	1839.98	(204,13)	1494.08	(206,13)	1401.34	(177,11)	974.91	(227,12)
27(	-.90,	.00)	1861.71	(204,13)	1812.62	(227,12)	1717.69	(179,12)	1634.07	(206,13)	463.85	(177,11)
28(	-.89,	.16)	1601.62	(227,12)	890.15	(204,13)	869.18	(213,14)	826.58	(206,13)	694.58	(179,12)
29(	-.85,	.31)	990.00	(213,14)	653.74	(227,12)	288.73	(180,11)	273.36	(193,14)	167.35	(204,13)
30(	-.78,	.45)	525.04	(213,14)	484.89	(125,12)	403.59	(201,12)	354.47	(164,13)	349.54	(180,11)
31(	-.69,	.58)	1792.46	(125,12)	1583.44	(164,13)	1581.74	(201,12)	911.78	(214,13)	721.89	(169,11)

32(	-.58,	.69)	2500.09	(164,13)	*	2444.12	(125,12)	2172.57	(201,12)	2130.00	(214,13)	687.10	(213,12)
33(	-.45,	.78)	2340.18	(214,13)		1919.91	(168,13)	1639.06	(125,12)	1412.12	(201,12)	865.01	(174,14)
34(	-.31,	.85)	1239.18	(214,13)		1224.87	(174,14)	904.31	(178,14)	788.59	(209,14)	673.47	(164,13)
35(	-.16,	.89)	1902.37	(209,14)		1538.86	(199,11)	1422.34	(199,13)	1346.76	(193,11)	1335.89	(209,13)
36(	.00,	.90)	2188.93	(209,13)		2169.57	(199,11)	2161.76	(199,13)	2149.84	(209,14)	1780.10	(193,11)
37(	.26,	1.48)	2608.48	(164,11)		1339.34	(139,11)	1233.62	(193,11)	1141.94	(209,13)	1046.63	(199,13)
38(	.51,	1.41)	2608.83	(164,11)		1658.90	(139,12)	1462.50	(207,12)	1347.64	(139,11)	946.39	(164,12)
39(	.75,	1.30)	1954.78	(139,12)		1589.76	(207,12)	1285.64	(112,12)	1197.13	(197,12)	1195.89	(164,11)
40(	.96,	1.15)	2177.10	(161,12)		2108.22	(142,13)	1855.03	(210,13)	1780.21	(145,15)	1772.35	(317,14)
41(	1.15,	.96)	2651.76	(142,13)		1668.37	(161,13)	1629.22	(195,14)	1595.46	(160,12)	1577.57	(174,13)
42(	1.30,	.75)	1570.09	(174,11)		1518.19	(142,13)	1517.50	(198,12)	1443.37	(174,13)	1276.78	(247,12)
43(	1.41,	.51)	1739.05	(247,12)		1629.94	(198,12)	1249.59	(174,11)	1063.72	(219,13)	939.02	(139,14)
44(	1.48,	.26)	2578.25	(219,13)		1080.38	(247,12)	968.59	(136,12)	881.52	(210,14)	826.27	(215,13)
45(	1.50,	.00)	* 2784.48	(219,13)		1947.32	(136,12)	633.14	(156,14)	590.43	(156,12)	570.20	(210,14)
46(	1.48,	-.26)	1805.85	(136,12)		1363.39	(219,13)	926.35	(247,14)	690.59	(205,11)	633.14	(156,14)
47(	1.41,	-.51)	2217.16	(247,14)		1790.88	(205,11)	1267.98	(223,13)	1241.61	(155,11)	1078.48	(162,14)
48(	1.30,	-.75)	2236.75	(247,14)		2082.97	(205,11)	1546.14	(136,11)	1211.27	(176,12)	1192.18	(249,13)
49(	1.15,	-.96)	2440.67	(136,11)		1992.93	(198,14)	1914.98	(185,12)	1792.23	(203,12)	1480.89	(187,11)
50(	.96,	-1.15)	2425.52	(203,12)		2032.25	(198,14)	1804.42	(136,11)	1709.99	(142,12)	1592.96	(91,15)
51(	.75,	-1.30)	2300.84	(142,14)		1914.95	(150,11)	1701.94	(142,12)	1535.74	(203,12)	1286.27	(203,11)
52(	.51,	-1.41)	1817.54	(142,14)		1210.43	(150,11)	815.23	(203,11)	779.69	(142,12)	776.26	(252,11)
53(	.26,	-1.48)	1603.32	(179,14)		1574.65	(232,13)	1399.43	(179,11)	1379.28	(135,11)	1349.44	(150,12)
54(	.00,	-1.50)	1567.17	(208,13)		1334.48	(150,12)	1171.22	(179,11)	1064.81	(221,12)	1033.60	(208,15)
55(	-.26,	-1.48)	1522.97	(208,13)		809.59	(163,14)	713.27	(168,14)	565.40	(150,15)	507.87	(243,15)
56(	-.51,	-1.41)	1789.60	(163,14)		1108.99	(151,13)	1005.25	(177,14)	936.40	(163,13)	807.05	(141,13)
57(	-.75,	-1.30)	1805.50	(163,14)		1574.65	(221,10)	1555.18	(177,14)	1512.38	(179,16)	1463.59	(204,12)
58(	-.96,	-1.15)	1688.59	(204,12)		1663.75	(153,13)	1557.35	(228,13)	1507.66	(201,11)	1495.01	(163,12)
59(	-1.15,	-.96)	2186.32	(201,11)		1939.17	(207,15)	1610.51	(136,13)	1595.23	(222,13)	1589.04	(207,14)
60(	-1.30,	-.75)	2699.75	(115,13)		2186.11	(136,13)	1952.19	(202,11)	1657.91	(207,15)	1641.94	(178,13)
61(	-1.41,	-.51)	2321.42	(115,13)		1740.34	(177,11)	1440.72	(202,11)	1378.01	(136,13)	1279.13	(143,14)
62(	-1.48,	-.26)	1803.72	(178,16)		1420.32	(206,13)	1352.19	(179,12)	1286.06	(177,11)	1279.30	(204,13)
63(	-1.50,	.00)	2121.21	(178,16)		1843.62	(204,14)	1526.54	(206,13)	1412.99	(227,12)	1279.30	(204,13)
64(	-1.48,	.26)	2077.26	(213,14)		1846.35	(204,14)	1220.55	(227,12)	1094.38	(178,16)	831.44	(169,12)
65(	-1.41,	.51)	2246.88	(213,14)		885.54	(180,11)	860.14	(193,14)	814.23	(204,14)	666.88	(180,15)
66(	-1.30,	.75)	1092.89	(213,14)		583.20	(229,13)	551.81	(124,12)	551.00	(180,11)	547.44	(180,15)
67(	-1.15,	.96)	1280.63	(201,12)		997.14	(164,13)	992.21	(125,12)	738.30	(169,11)	725.97	(173,14)
68(	-.96,	1.15)	1871.59	(201,12)		1700.79	(164,13)	1431.17	(125,12)	1212.00	(214,13)	1096.23	(201,10)
69(	-.75,	1.30)	1495.28	(174,14)		1403.77	(214,13)	1357.90	(164,13)	1282.01	(201,12)	993.74	(125,12)
70(	-.51,	1.41)	2201.64	(174,14)		1525.97	(178,14)	773.75	(214,13)	614.00	(125,13)	551.87	(125,15)
71(	-.26,	1.48)	1914.04	(178,14)		1492.96	(174,14)	1435.91	(193,11)	1176.47	(209,14)	1029.05	(199,11)
72(	.00,	1.50)	1946.45	(193,11)		1489.78	(199,11)	1410.79	(209,13)	1384.65	(199,13)	1357.40	(209,14)
73(	.35,	1.97)	2019.44	(164,11)		951.77	(139,11)	939.27	(193,11)	929.89	(172,11)	814.96	(164,12)
74(	.68,	1.88)	2019.43	(164,11)		1269.81	(139,12)	1194.41	(126,12)	1148.81	(143,13)	1142.57	(164,12)
75(	1.00,	1.73)	1493.28	(139,12)		1348.07	(238,12)	1318.35	(112,12)	1314.20	(197,13)	1262.61	(209,16)
76(	1.29,	1.53)	1693.35	(142,13)		1446.78	(161,12)	1368.66	(210,13)	1328.07	(197,16)	1288.40	(160,14)
77(	1.53,	1.29)	2159.56	(142,13)		1454.39	(160,12)	1399.97	(161,13)	1363.57	(259,12)	1359.85	(139,15)
78(	1.73,	1.00)	1298.32	(230,12)		1227.12	(174,11)	1214.81	(142,13)	1201.25	(174,13)	1194.97	(143,12)
79(	1.88,	.68)	1451.81	(247,12)		1259.42	(198,12)	1057.05	(139,14)	1035.55	(210,10)	962.22	(174,11)
80(	1.97,	.35)	2067.51	(219,13)		1067.99	(215,13)	1057.37	(210,14)	994.61	(209,12)	950.67	(160,11)
81(	2.00,	.00)	2241.58	(219,13)		1514.59	(136,12)	919.37	(156,12)	883.67	(222,14)	873.90	(156,14)
82(	1.97,	-.35)	1396.97	(136,12)		1210.81	(140,12)	1104.33	(131,13)	1098.73	(156,14)	1083.20	(130,12)
83(	1.88,	-.68)	2179.10	(247,14)		1729.29	(162,14)	1599.16	(162,13)	1558.91	(20,15)	1527.59	(155,11)
84(	1.73,	-1.00)	2178.67	(247,14)		1617.71	(205,11)	1407.35	(162,16)	1346.55	(249,13)	1303.32	(185,11)
85(	1.53,	-1.29)	1898.46	(136,11)		1612.88	(198,14)	1485.52	(185,12)	1362.74	(203,12)	1318.85	(221,14)
86(	1.29,	-1.53)	1886.10	(203,12)		1658.17	(148,13)	1658.17	(186,12)	1613.18	(198,14)	1567.65	(91,15)
87(	1.00,	-1.73)	1909.81	(142,14)		1495.26	(150,11)	1317.94	(142,12)	1154.46	(203,12)	1111.18	(227,13)
88(	.68,	-1.88)	1497.39	(142,14)		1029.20	(252,11)	1024.62	(291,11)	945.54	(244,11)	915.23	(150,11)

89(	.35,	-1.97)	1174.85	(179,14)	1059.74	(205,12)	1022.40	(179,11)	1018.42	(204,10)	1012.28	(150, 9)
90(	.00,	-2.00)	1148.70	(208,15)	1093.57	(150,12)	1076.78	(179,11)	1074.06	(208,13)	997.27	(221,12)
91(	-.35,	-1.97)	1404.76	(218,14)	1285.17	(168,14)	1218.90	(203,16)	1170.98	(243,15)	1161.86	(150,15)
92(	-.68,	-1.88)	1400.78	(151,13)	1391.94	(191,13)	1389.37	(163,18)	1292.83	(163,13)	1207.01	(212,15)
93(	-1.00,	-1.73)	1679.62	(221,10)	1567.93	(179,16)	1492.48	(115,15)	1491.72	(222,12)	1449.38	(292,11)
94(	-1.29,	-1.53)	1667.65	(153,13)	1551.23	(163,12)	1539.16	(116,13)	1530.91	(245,13)	1528.68	(256,15)
95(	-1.53,	-1.29)	1726.54	(201,11)	1681.02	(207,15)	1249.45	(136,13)	1233.80	(222,13)	1096.31	(192,13)
96(	-1.73,	-1.00)	2101.81	(115,13)	1729.30	(136,13)	1538.94	(202,11)	1426.59	(207,15)	1192.99	(178,13)
97(	-1.88,	-.68)	1787.75	(115,13)	1356.44	(177,11)	1111.90	(202,11)	1058.49	(136,13)	1055.53	(212,13)
98(	-1.97,	-.35)	1829.56	(178,16)	980.05	(177,11)	924.60	(146,14)	903.52	(146,15)	890.19	(146,12)
99(	-2.00,	.00)	2153.38	(178,16)	1754.95	(208,14)	1029.17	(227,12)	1009.60	(178,15)	936.69	(206,13)
100(	-1.97,	.35)	1754.85	(208,14)	1726.17	(213,14)	1106.11	(178,16)	993.82	(169,12)	971.42	(228,12)
101(	-1.88,	.68)	1871.56	(213,14)	1004.18	(180,11)	992.94	(193,14)	955.12	(180,15)	939.09	(180,14)
102(	-1.73,	1.00)	885.72	(213,14)	850.36	(229,13)	819.55	(124,12)	819.14	(180,15)	762.49	(285,12)
103(	-1.53,	1.29)	1134.20	(173,14)	1003.03	(169,11)	972.36	(201,12)	929.04	(180,12)	911.36	(169,10)
104(	-1.29,	1.53)	1461.55	(201,12)	1318.63	(168,13)	999.68	(125,12)	972.24	(213,13)	886.28	(213,12)
105(	-1.00,	1.73)	1217.15	(174,14)	1033.98	(164,13)	981.95	(214,13)	972.36	(201,12)	954.58	(181,12)
106(	-.68,	1.88)	1829.95	(174,14)	1159.61	(178,14)	915.07	(125,13)	873.09	(169,16)	852.12	(214,14)
107(	-.35,	1.97)	1478.71	(178,14)	1217.15	(174,14)	1108.72	(193,11)	830.35	(277,12)	816.26	(125,15)
108(	.00,	2.00)	1534.55	(193,11)	1090.22	(199,11)	957.32	(209,13)	950.41	(169,15)	874.98	(164,11)
109(	.66,	3.74)	1133.32	(164,11)	1005.18	(172,11)	922.93	(265,10)	919.77	(139,10)	915.61	(126,11)
110(	1.30,	3.57)	1197.53	(164,15)	1174.46	(160,15)	1147.60	(182,12)	1147.60	(188,12)	1138.01	(197,18)
111(	1.90,	3.29)	1262.65	(126,14)	1221.62	(259,11)	1221.62	(220, 9)	1219.27	(241,15)	1212.56	(144, 8)
112(	2.44,	2.91)	1282.97	(107,16)	1282.78	(61,17)	1272.97	(145,15)	1269.88	(129,22)	1269.53	(108,17)
113(	2.91,	2.44)	1231.30	(142,13)	958.58	(247,10)	867.38	(264,15)	844.58	(207,13)	841.99	(259,12)
114(	3.29,	1.90)	1073.25	(246,11)	926.25	(200,14)	914.89	(174,12)	910.70	(223,11)	897.22	(174,16)
115(	3.57,	1.30)	1328.41	(211, 9)	1254.64	(210,10)	915.13	(201,13)	874.81	(200,11)	865.69	(237,11)
116(	3.74,	.66)	1366.55	(167,15)	1309.04	(130, 7)	1290.72	(216,13)	1203.59	(86,14)	1202.15	(236,13)
117(	3.80,	.00)	1311.71	(140,15)	1283.35	(215,10)	1276.48	(175,18)	1266.58	(219,13)	1259.46	(230,16)
118(	3.74,	-.66)	1282.50	(220,17)	1255.13	(77,12)	1212.28	(130,12)	1195.48	(140,12)	1177.35	(165,16)
119(	3.57,	-1.30)	1254.37	(162,13)	1237.07	(145,17)	1228.70	(247,14)	1204.34	(20,14)	1185.83	(269,10)
120(	3.29,	-1.90)	1300.17	(211,12)	1246.46	(162,16)	1228.69	(247,14)	1186.81	(230,11)	1159.92	(91,14)
121(	2.91,	-2.44)	1310.35	(267,12)	1268.24	(208,17)	1220.38	(135,18)	1214.42	(203,15)	1208.89	(231,15)
122(	2.44,	-2.91)	1256.75	(64,15)	1229.42	(138,11)	1209.55	(94, 7)	1198.49	(148,13)	1198.49	(186,12)
123(	1.90,	-3.29)	1269.98	(172, 2)	1222.85	(278,12)	1221.55	(205,10)	1197.77	(218,11)	1182.41	(291,12)
124(	1.30,	-3.57)	1265.69	(249,14)	1163.71	(284,13)	1158.54	(47, 5)	1142.17	(138,14)	1119.55	(208,18)
125(	.66,	-3.74)	1231.99	(278,14)	1206.82	(232,13)	1191.93	(284,15)	1154.73	(207,16)	1119.55	(206,15)
126(	.00,	-3.80)	1427.04	(244,13)	1269.74	(217,11)	1237.76	(221,12)	1224.53	(186,11)	1174.16	(292,18)
127(	-.66,	-3.74)	1259.46	(203,16)	1222.79	(153,11)	1207.72	(217,15)	1179.73	(290,10)	1163.42	(255,11)
128(	-1.30,	-3.57)	1082.46	(212,15)	1021.48	(257,17)	1020.74	(217,14)	1005.03	(217,12)	1002.48	(232,10)
129(	-1.90,	-3.29)	988.54	(221,10)	979.00	(290,11)	978.09	(115,15)	973.58	(206,17)	965.22	(259,15)
130(	-2.44,	-2.91)	1117.16	(115, 8)	1075.33	(141,11)	1040.46	(116,15)	1035.83	(256,15)	1005.72	(242,14)
131(	-2.91,	-2.44)	987.33	(201,11)	961.71	(207,15)	881.63	(192,10)	881.41	(187,14)	859.10	(178,10)
132(	-3.29,	-1.90)	1193.83	(115,13)	1024.47	(115,11)	988.17	(136,13)	900.23	(192,16)	879.39	(202,11)
133(	-3.57,	-1.30)	985.24	(115,13)	955.69	(146,10)	906.88	(178,12)	859.73	(82,12)	858.02	(288,13)
134(	-3.74,	-.66)	1018.58	(178,16)	825.97	(123,11)	820.17	(279,13)	813.82	(146,14)	797.06	(228,14)
135(	-3.80,	.00)	1234.23	(178,16)	1131.30	(243,10)	1000.35	(204,14)	906.34	(122,16)	905.01	(245,11)
136(	-3.74,	.66)	1228.88	(219,10)	1111.99	(246,10)	1093.38	(180, 9)	1018.34	(79,12)	1000.35	(204,14)
137(	-3.57,	1.30)	1114.76	(180,15)	1113.60	(180,14)	1057.71	(213,14)	902.98	(213,16)	901.90	(181,16)
138(	-3.29,	1.90)	981.61	(300,12)	956.55	(202,12)	948.09	(213,15)	938.44	(180,15)	893.58	(254,11)
139(	-2.91,	2.44)	965.34	(169,10)	939.32	(202,10)	927.09	(173,14)	901.79	(229,14)	895.05	(228,11)
140(	-2.44,	2.91)	944.63	(242,11)	936.83	(193,15)	894.48	(188,10)	847.23	(213,13)	835.79	(201,12)
141(	-1.90,	3.29)	924.21	(251,15)	910.97	(181,11)	890.42	(242,13)	834.49	(193,12)	819.48	(275,11)
142(	-1.30,	3.57)	1046.94	(174,14)	898.48	(142,15)	898.05	(169,16)	877.79	(277,14)	846.56	(214,14)
143(	-.66,	3.74)	935.33	(125,14)	886.81	(198,16)	842.66	(178,14)	809.94	(58,13)	789.34	(251,12)
144(	.00,	3.80)	1121.15	(29,10)	876.89	(193,11)	875.51	(242,15)	854.60	(254,14)	847.16	(158,11)
145(	1.08,	6.11)	799.14	(298,12)	773.11	(306,10)	735.41	(329,11)	729.74	(164,11)	720.45	(136,15)

146(	2.12,	5.83)	832.50	(175, 8)	786.56	(264,10)	749.97	(18,13)	729.73	(164,11)	725.53	(251,10)
147(	3.10,	5.37)	882.80	(251,10)	848.62	(270,10)	832.66	(184, 8)	830.18	(208,11)	767.80	(243,11)
148(	3.99,	4.75)	872.72	(159,11)	802.95	(314,11)	764.88	(307,12)	738.95	(156,17)	738.43	(281,10)
149(	4.75,	3.99)	823.48	(199,10)	804.63	(142,13)	766.92	(287,10)	735.43	(210,16)	705.51	(264,16)
150(	5.37,	3.10)	887.49	(171, 8)	860.24	(246,11)	754.90	(214,17)	753.85	(137, 9)	736.75	(322,12)
151(	5.83,	2.12)	963.35	(171,12)	955.52	(201,14)	919.63	(223,15)	919.35	(140,16)	910.79	(174,17)
152(	6.11,	1.08)	973.73	(209,17)	973.73	(209,18)	940.37	(268, 2)	932.88	(184, 9)	930.50	(231, 9)
153(	6.20,	.00)	972.49	(180,15)	947.05	(184,13)	928.38	(220,15)	915.83	(318,14)	892.06	(326, 6)
154(	6.11,	-1.08)	970.70	(141, 1)	944.34	(236,15)	938.26	(104,21)	922.53	(248,21)	915.98	(220,17)
155(	5.83,	-2.12)	962.60	(223,18)	938.69	(200,18)	938.69	(222,18)	903.02	(223,17)	895.26	(264,17)
156(	5.37,	-3.10)	999.49	(253,17)	962.60	(202,18)	910.87	(334, 8)	897.89	(98,20)	897.35	(211,12)
157(	4.75,	-3.99)	953.79	(221,17)	933.57	(208,17)	924.67	(267,12)	872.51	(365,17)	852.78	(202,20)
158(	3.99,	-4.75)	977.81	(208, 8)	973.73	(205,13)	928.88	(278, 6)	894.04	(341, 3)	875.67	(280,13)
159(	3.10,	-5.37)	979.29	(205,10)	955.52	(219,18)	949.37	(308,15)	928.49	(172, 2)	913.05	(278,12)
160(	2.12,	-5.83)	956.35	(290,20)	899.45	(249,16)	882.23	(162,20)	877.01	(249, 1)	868.22	(135, 5)
161(	1.08,	-6.11)	958.76	(217,20)	956.35	(249, 3)	886.00	(135, 1)	871.45	(168, 2)	865.48	(211,17)
162(	.00,	-6.20)	1035.69	(244,13)	976.67	(211,20)	947.03	(245, 2)	944.05	(113,22)	918.36	(207,22)
163(	-1.08,	-6.11)	866.45	(217,15)	849.66	(279, 9)	846.06	(255,11)	827.43	(290,10)	815.33	(284,12)
164(	-2.12,	-5.83)	983.87	(218,16)	956.35	(162,24)	914.26	(217,22)	898.67	(78, 5)	887.74	(256,16)
165(	-3.10,	-5.37)	932.97	(141, 7)	928.21	(257, 3)	881.31	(255,22)	871.10	(218,18)	850.78	(256,12)
166(	-3.99,	-4.75)	820.18	(115, 8)	814.76	(141,11)	755.69	(245,14)	716.67	(199,17)	713.18	(177,17)
167(	-4.75,	-3.99)	698.31	(177,16)	690.35	(122,18)	647.41	(257,16)	647.01	(201,11)	639.61	(151, 9)
168(	-5.37,	-3.10)	923.20	(208,10)	777.41	(115,13)	777.30	(313,15)	740.62	(115,11)	736.11	(205,17)
169(	-5.83,	-2.12)	870.33	(146,10)	828.45	(217,16)	788.36	(288,10)	775.41	(304,11)	771.00	(153,14)
170(	-6.11,	-1.08)	939.60	(288,21)	883.77	(219, 1)	877.11	(222,23)	874.25	(239,23)	871.87	(207,21)
171(	-6.20,	.00)	992.73	(243,10)	803.72	(178,16)	712.86	(289,15)	699.65	(207, 9)	680.58	(288,12)
172(	-6.11,	1.08)	956.68	(219,10)	789.83	(246,10)	764.46	(180, 9)	751.13	(79,12)	679.83	(79,11)
173(	-5.83,	2.12)	846.78	(11,12)	807.00	(124, 8)	786.49	(228, 8)	755.81	(180,14)	755.81	(180,15)
174(	-5.37,	3.10)	960.56	(193,10)	898.79	(300,12)	797.67	(319,11)	781.09	(243, 9)	761.53	(275,13)
175(	-4.75,	3.99)	777.01	(188, 9)	769.65	(132, 9)	769.11	(202,10)	732.40	(240, 9)	729.25	(183,17)
176(	-3.99,	4.75)	914.30	(319,15)	894.96	(169,22)	884.84	(251, 1)	869.67	(228, 9)	866.23	(356,15)
177(	-3.10,	5.37)	887.99	(214,11)	845.89	(309,13)	843.90	(170,14)	809.90	(213,17)	805.32	(214, 9)
178(	-2.12,	5.83)	870.70	(125,17)	810.24	(265,15)	800.35	(312,13)	796.61	(332,12)	787.62	(136,16)
179(	-1.08,	6.11)	851.60	(240,17)	801.16	(265,14)	764.21	(251,12)	756.00	(329,12)	749.10	(309,15)
180(	.00,	6.20)	841.69	(29,10)	795.81	(45,16)	743.43	(143,19)	725.11	(306,16)	709.55	(247,17)

FIVE HIGHEST 3-HOUR SO2 CONCENTRATIONS(ENDING ON JULIAN DAY, HOUR)
(MICROGRAMS/M**3)

RECEPTOR			1		2		3		4		5	
1(	.16,	.89)	984.19	(209,15)	747.78	(139,12)	629.34	(164,12)	537.63	(199,15)	501.94	(199,12)
2(	.31,	.85)	948.49	(139,12)	650.08	(164,12)	561.78	(207,12)	315.23	(209,15)	181.57	(199,15)
3(	.45,	.78)	631.37	(139,12)	589.07	(207,12)	265.43	(164,12)	179.00	(185,15)	81.84	(197,12)
4(	.58,	.69)	514.58	(185,15)	276.37	(207,12)	246.33	(142,15)	210.69	(139,12)	66.54	(160,15
5(	.69,	.58)	691.01	(185,15)	316.99	(142,15)	258.80	(198,12)	187.56	(174,12)	99.08	(174,15)
6(	.78,	.45)	586.87	(198,12)	436.85	(185,15)	331.17	(174,12)	171.29	(142,15)	88.08	(174,15)
7(	.85,	.31)	624.96	(198,12)	250.15	(174,12)	117.23	(185,15)	115.46	(247,12)	106.82	(219,15)
8(	.89,	.16)	317.26	(198,12)	294.88	(136,12)	282.64	(219,15)	77.95	(174,12)	65.27	(210,15)
9(	.90,	.00)	577.23	(136,12)	301.13	(219,15)	62.00	(198,12)	37.02	(210,15)	29.95	(205,12)
10(	.89,	-.16)	543.75	(136,12)	216.14	(205,12)	142.64	(219,15)	37.97	(223,15)	30.07	(247,15)
11(	.85,	-.31)	553.03	(205,12)	332.02	(136,12)	86.59	(247,15)	75.94	(185,12)	62.62	(185,15)
12(	.78,	-.45)	641.82	(205,12)	435.94	(136,12)	324.04	(185,12)	316.37	(185,15)	268.52	(187,12)
13(	.69,	-.58)	684.14	(203,12)	682.10	(136,12)	677.48	(185,15)	643.00	(187,12)	603.18	(185,12)
14(	.58,	-.69)	1262.34	(203,12)	738.03	(187,12)	697.95	(185,15)	673.54	(142,12)	554.84	(136,12)
15(	.45,	-.78)	1231.91	(203,12)	780.45	(150,12)	744.22	(142,12)	441.58	(142,15)	339.07	(187,12)
16(	.31,	-.85)	604.83	(203,12)	588.70	(150,12)	354.55	(142,12)	347.03	(142,15)	273.96	(135,15)

17(	.16,	-.89)	323.33	(150,12)	296.28	(208,15)	131.96	(203,12)	120.12	(179,15)	111.08	(179,12)
18(	.00,	-.90)	557.55	(208,15)	127.17	(150,12)	48.71	(179,12)	38.49	(163,15)	35.29	(204,12)
19(	-.16,	-.89)	519.11	(208,15)	222.30	(163,15)	32.01	(204,12)	30.82	(168,15)	23.39	(150,12)
20(	-.31,	-.85)	489.48	(163,15)	226.89	(208,15)	172.15	(204,12)	88.95	(146,15)	40.09	(177,15)
21(	-.45,	-.78)	486.48	(163,15)	454.83	(204,12)	365.77	(146,15)	212.56	(228,15)	158.25	(207,15)
22(	-.58,	-.69)	620.61	(146,15)	530.55	(204,12)	488.80	(207,15)	474.78	(228,15)	368.64	(201,12)
23(	-.69,	-.58)	660.58	(207,15)	589.17	(222,15)	543.80	(201,12)	496.58	(146,15)	474.79	(228,15)
24(	-.78,	-.45)	605.90	(143,15)	550.37	(222,15)	539.76	(202,12)	528.38	(178,15)	511.58	(115,15)
25(	-.85,	-.31)	623.40	(177,12)	605.90	(143,15)	435.56	(115,15)	395.97	(202,12)	353.96	(179,12)
26(	-.89,	-.16)	655.58	(179,12)	647.11	(204,15)	500.69	(206,15)	472.37	(177,12)	324.97	(227,12)
27(	-.90,	.00)	716.01	(204,15)	604.21	(227,12)	572.56	(179,12)	548.16	(206,15)	183.90	(177,12)
28(	-.89,	.16)	533.87	(227,12)	396.08	(204,15)	289.75	(213,15)	276.52	(206,15)	231.53	(179,12)
29(	-.85,	.31)	330.48	(213,15)	217.91	(227,12)	97.58	(180,12)	94.42	(204,15)	91.12	(193,15)
30(	-.78,	.45)	181.87	(213,15)	161.63	(125,12)	146.18	(201,12)	145.28	(180,12)	118.16	(164,15)
31(	-.69,	.58)	604.60	(201,12)	597.49	(125,12)	527.81	(164,15)	381.87	(169,12)	304.19	(214,15)
32(	-.58,	.69)	848.60	(201,12)	833.36	(168,15)	818.71	(125,12)	717.56	(214,15)	229.17	(213,12)
33(	-.45,	.78)	812.07	(214,15)	639.97	(164,15)	550.08	(201,12)	539.69	(125,12)	288.34	(174,15)
34(	-.31,	.85)	443.12	(214,15)	408.29	(174,15)	379.78	(209,15)	301.44	(178,15)	224.49	(164,15)
35(	-.16,	.89)	1079.42	(209,15)	512.95	(199,12)	474.1[illegible]	(199,15)	449.19	(193,12)	368.29	(178,15)
36(	.00,	.90) *	1446.44	(209,15)	723.20	(199,12)	720.59	(199,15)	593.37	(193,12)	312.34	(139,12)
37(	.26,	1.48)	1104.56	(164,12)	777.93	(139,12)	691.01	(209,15)	411.21	(193,12)	356.83	(199,12)
38(	.51,	1.41)	1185.07	(164,12)	1 095.46	(139,12)	565.81	(207,12)	391.06	(126,12)	374.01	(209,15)
39(	.75,	1.30)	880.26	(139,12)	742.92	(207,12)	637.97	(197,15)	534.86	(125,12)	499.30	(164,12)
40(	.96,	1.15)	1067.52	(137,15)	1 015.65	(145,15)	1005.45	(161,12)	956.40	(197,15)	837.69	(61,18)
41(	1.15,	.96)	1194.03	(65, 6)	883.92	(142,15)	647.76	(84,12)	645.43	(145,15)	617.32	(260,15)
42(	1.30,	.75)	764.13	(174,12)	661.16	(247,12)	587.47	(143,12)	521.56	(210,12)	517.28	(198,12)
43(	1.41,	.51)	824.75	(247,12)	589.18	(198,12)	550.46	(139,15)	492.55	(174,12)	411.26	(143,12)
44(	1.48,	.26)	859.77	(219,15)	463.40	(247,12)	375.59	(198,12)	322.83	(136,12)	306.57	(156,12)
45(	1.50,	.00)	946.23	(219,15)	649.23	(136,12)	250.03	(156,15)	243.05	(156,12)	195.92	(222,15)
46(	1.48,	-.26)	613.06	(136,12)	574.80	(219,15)	329.25	(247,15)	230.20	(205,12)	212.29	(156,15)
47(	1.41,	-.51)	844.26	(247,15)	596.96	(205,12)	573.71	(162,15)	442.93	(155,12)	422.66	(223,15)
48(	1.30,	-.75)	815.54	(247,15)	739.96	(162,12)	721.45	(185,12)	694.57	(205,12)	638.53	(155,15)
49(	1.15,	-.96)	924.76	(187,12)	814.93	(136,12)	790.87	(185,12)	784.63	(203,15)	700.30	(203,12)
50(	.96,	-1.15)	1125.55	(203,12)	* 1 112.94	(187,12)	817.35	(203,15)	697.96	(91,18)	677.42	(198,15)
51(	.75,	-1.30)	940.67	(203,12)	766.95	(142,15)	643.83	(150,12)	567.31	(142,12)	316.25	(227,15)
52(	.51,	-1.41)	605.85	(142,15)	506.25	(150,12)	408.76	(203,12)	268.66	(291,12)	265.46	(179,15)
53(	.26,	-1.48)	798.97	(150,12)	734.67	(179,12)	557.54	(284,15)	535.53	(179,15)	529.50	(204,12)
54(	.00,	-1.50)	866.92	(208,15)	603.09	(204,12)	556.01	(150,12)	443.75	(179,12)	354.94	(221,12)
55(	-.26,	-1.48)	596.21	(208,15)	331.10	(163,15)	292.80	(168,15)	195.25	(204,12)	190.30	(150,15)
56(	-.51,	-1.41)	908.77	(163,15)	491.75	(141,15)	369.66	(153,15)	349.19	(177,15)	298.47	(222,12)
57(	-.75,	-1.30)	959.57	(222,12)	951.27	(163,15)	894.57	(115,15)	858.25	(177,15)	538.34	(221,12)
58(	-.96,	-1.15)	817.46	(207,15)	803.76	(222,12)	730.21	(116,15)	666.57	(115,15)	562.87	(204,12)
59(	-1.15,	-.96)	1176.07	(207,15)	728.77	(201,12)	540.41	(115,15)	536.84	(136,15)	531.74	(222,15)
60(	-1.30,	-.75)	901.86	(115,15)	869.97	(207,15)	728.70	(136,15)	650.73	(202,12)	547.35	(178,15)
61(	-1.41,	-.51)	773.81	(115,15)	669.89	(177,12)	480.24	(202,12)	459.34	(136,15)	426.38	(143,15)
62(	-1.48,	-.26)	696.41	(204,15)	640.56	(178,18)	566.11	(206,15)	486.64	(177,12)	450.73	(179,12)
63(	-1.50,	.00)	1040.97	(204,15)	761.13	(178,18)	616.79	(206,15)	471.00	(227,12)	390.73	(179,12)
64(	-1.48,	.26)	818.80	(204,15)	694.38	(213,15)	406.85	(227,12)	380.23	(178,18)	291.48	(124,15)
65(	-1.41,	.51)	775.81	(213,15)	437.52	(180,15)	320.79	(180,12)	310.07	(204,15)	286.73	(193,15)
66(	-1.30,	.75)	432.35	(213,15)	285.01	(229,15)	277.65	(180,12)	234.61	(180,15)	186.65	(201,12)
67(	-1.15,	.96)	657.55	(201,12)	444.86	(169,12)	386.15	(173,15)	333.33	(229,15)	332.38	(164,15)
68(	-.96,	1.15)	989.27	(201,12)	566.93	(164,15)	477.06	(125,12)	422.71	(214,15)	357.78	(188,12)
69(	-.75,	1.30)	696.86	(201,12)	596.58	(214,15)	498.47	(174,15)	452.63	(164,15)	393.60	(181,12)
70(	-.51,	1.41)	733.88	(174,15)	508.66	(178,15)	425.07	(214,15)	408.06	(125,15)	230.91	(209,15)
71(	-.26,	1.48)	673.38	(209,15)	638.01	(178,15)	497.70	(174,15)	480.87	(193,12)	387.01	(125,15)
72(	.00,	1.50)	926.02	(209,15)	648.83	(193,12)	496.71	(199,12)	461.55	(199,15)	437.08	(164,12)
73(	.35,	1.97)	944.80	(164,12)	698.77	(139,12)	493.64	(209,15)	486.21	(172,12)	401.27	(126,12)

74(	.68,	1.88)	1054.00	(164,12)	921.27	(139,12)	583.46	(126,12)	538.78	(125,12)	513.25	(172,12)
75(	1.00,	1.73)	822.60	(197,15)	694.88	(207,12)	686.81	(325,12)	672.79	(126,15)	659.60	(139,12)
76(	1.29,	1.53)	815.90	(197,15)	808.63	(137,15)	663.68	(265,12)	624.38	(161,12)	564.45	(142,15)
77(	1.53,	1.29)	922.38	(65, 6)	747.28	(260,15)	719.85	(142,15)	692.18	(84,12)	600.33	(197,18)
78(	1.73,	1.00)	840.77	(210,12)	782.68	(178,12)	760.08	(143,12)	720.93	(247,12)	696.95	(200,15)
79(	1.88,	.68)	819.22	(247,12)	670.47	(139,15)	558.87	(143,12)	507.89	(198,12)	500.98	(156,15)
80(	1.97,	.35)	689.68	(219,15)	453.41	(156,12)	444.22	(247,12)	425.41	(198,12)	391.84	(269,12)
81(	2.00,	.00)	777.65	(219,15)	504.92	(136,12)	431.51	(156,12)	372.20	(222,15)	348.68	(156,15)
82(	1.97,	-.35)	628.43	(219,15)	597.41	(166,15)	526.46	(176,12)	472.13	(136,12)	425.28	(131,15)
83(	1.88,	-.68)	1260.82	(20,15)	1109.48	(162,15)	1030.96	(247,15)	676.48	(162,12)	665.28	(77,18)
84(	1.73,	-1.00)	868.60	(247,15)	868.72	(162,12)	778.13	(155,15)	739.83	(293,12)	723.41	(254,15)
85(	1.53,	-1.29)	979.51	(187,12)	862.49	(203,15)	724.87	(155,12)	701.60	(185,12)	633.54	(136,12)
86(	1.29,	-1.53)	1098.21	(187,12)	869.41	(203,12)	788.28	(203,15)	762.37	(91,18)	687.13	(94, 9)
87(	1.00,	-1.73)	717.97	(203,12)	636.60	(142,15)	506.46	(150,12)	439.31	(142,12)	397.37	(106,15)
88(	.68,	-1.88)	499.13	(142,15)	453.79	(150,12)	417.48	(279,12)	397.51	(291,12)	352.93	(252,12)
89(	.35,	-1.97)	625.11	(150,12)	602.15	(179,12)	414.58	(204,12)	392.28	(179,15)	361.14	(244,15)
90(	.00,	-2.00)	740.92	(208,15)	636.68	(204,12)	513.86	(150,12)	426.05	(179,12)	341.73	(244,15)
91(	-.35,	-1.97)	607.04	(168,15)	561.42	(208,15)	490.11	(218,15)	448.87	(243,15)	406.30	(203,18)
92(	-.68,	-1.88)	894.15	(163,15)	833.19	(141,15)	588.40	(141,12)	499.55	(212,15)	492.10	(168,15)
93(	-1.00,	-1.73)	1025.81	(222,12)	928.85	(177,15)	927.68	(115,15)	825.19	(163,15)	644.67	(290,12)
94(	-1.29,	-1.53)	995.63	(116,15)	980.76	(222,12)	629.99	(115,15)	629.15	(115,12)	627.85	(245,15)
95(	-1.53,	-1.29)	853.87	(207,15)	630.26	(192,15)	575.51	(201,12)	567.26	(115,12)	482.84	(219,12)
96(	-1.73,	-1.00)	702.43	(115,15)	643.46	(207,15)	576.43	(136,15)	538.96	(219,12)	512.98	(202,12)
97(	-1.88,	-.68)	653.43	(177,12)	595.92	(115,15)	579.15	(146,12)	504.48	(246,15)	427.12	(82,12)
98(	-1.97,	-.35)	725.45	(178,18)	609.56	(146,15)	530.01	(146,12)	513.30	(204,15)	477.14	(206,15)
99(	-2.00,	.00)	879.02	(178,18)	846.92	(204,15)	530.33	(206,15)	352.95	(177,12)	343.06	(227,12)
100(	-1.97,	.35)	699.38	(204,15)	580.95	(213,15)	458.38	(124,18)	445.82	(124,15)	417.20	(178,18)
101(	-1.88,	.68)	697.88	(213,15)	631.41	(180,15)	412.95	(180,12)	333.81	(124,12)	331.01	(193,15)
102(	-1.73,	1.00)	476.64	(213,15)	435.68	(229,15)	388.27	(180,12)	348.53	(180,15)	325.84	(202,12)
103(	-1.53,	1.29)	638.16	(169,12)	598.70	(173,15)	546.88	(275,12)	537.12	(229,15)	499.31	(201,12)
104(	-1.29,	1.53)	773.40	(201,12)	575.53	(188,12)	529.57	(250,15)	527.88	(275,12)	459.83	(181,12)
105(	-1.00,	1.73)	660.00	(181,12)	536.16	(214,15)	530.92	(201,12)	506.70	(169,15)	405.72	(174,15)
106(	-.68,	1.88)	638.28	(125,15)	609.98	(174,15)	453.25	(214,15)	386.54	(178,15)	291.24	(169,18)
107(	-.35,	1.97)	656.84	(125,15)	492.90	(178,15)	428.57	(158,12)	416.64	(209,15)	405.86	(174,15)
108(	.00,	2.00)	603.64	(209,15)	511.53	(193,12)	475.36	(158,12)	363.58	(199,12)	339.33	(164,12)
109(	.66,	3.74)	579.53	(164,12)	554.18	(139,12)	501.76	(136,15)	497.26	(188,15)	495.77	(73,15)
110(	1.30,	3.57)	635.84	(164,12)	612.97	(139,12)	598.13	(183,12)	574.71	(172,12)	547.00	(125, 9)
111(	1.90,	3.29)	885.74	(282,12)	828.83	(317,18)	827.92	(270,12)	792.54	(129,12)	765.76	(359,12)
112(	2.44,	2.91)	984.57	(137,15)	867.56	(316,15)	850.45	(129,24)	796.53	(3, 3)	795.59	(56,12)
113(	2.91,	2.44)	516.07	(260,15)	413.96	(84,12)	410.43	(142,15)	391.50	(223,12)	391.40	(264,15)
114(	3.29,	1.90)	704.17	(210,12)	652.11	(223,12)	538.17	(174,12)	522.95	(200,15)	512.30	(78,15)
115(	3.57,	1.30)	578.20	(247,12)	577.16	(143,12)	551.34	(258,15)	535.32	(210,12)	531.68	(130,15)
116(	3.74,	.66)	769.37	(86, 6)	756.12	(113,15)	750.44	(236,15)	725.67	(216,15)	689.52	(209,18)
117(	3.80,	.00)	934.28	(113,18)	850.00	(10, 3)	844.28	(25, 3)	807.93	(86,21)	725.20	(105,15)
118(	3.74,	-.66)	999.98	(168,15)	696.55	(131,18)	656.78	(77,15)	615.20	(81,12)	604.76	(87, 3)
119(	3.57,	-1.30)	1018.43	(20,15)	828.93	(77,18)	781.58	(247,15)	773.28	(222,18)	768.51	(162,15)
120(	3.29,	-1.90)	947.36	(98,21)	837.21	(70, 9)	775.63	(283,15)	762.13	(98,24)	731.77	(162,12)
121(	2.91,	-2.44)	1071.07	(221,18)	843.92	(353, 3)	829.73	(81,18)	821.83	(90,12)	809.77	(203,15)
122(	2.44,	-2.91)	748.16	(291,15)	729.44	(187,12)	721.27	(280,15)	692.72	(94, 9)	605.19	(59,21)
123(	1.90,	-3.29)	773.02	(106,15)	753.96	(219,18)	676.06	(278,15)	651.99	(218,12)	620.10	(308,15)
124(	1.30,	-3.57)	659.48	(292,18)	642.79	(249,15)	630.67	(279,12)	547.08	(352,12)	544.17	(186, 9)
125(	.66,	-3.74)	654.03	(295,15)	612.53	(13,15)	569.86	(179,12)	562.95	(244,15)	562.42	(150,12)
126(	.00,	-3.80)	554.27	(208,15)	544.15	(204,12)	525.61	(211,21)	507.51	(150, 9)	504.12	(244,15)
127(	-.66,	-3.74)	646.70	(290,15)	616.29	(153,12)	509.72	(217,15)	461.88	(255,18)	453.67	(168,15)
128(	-1.30,	-3.57)	548.26	(227,18)	546.99	(141,15)	541.50	(163,15)	405.03	(141,12)	446.88	(127, 3)
129(	-1.90,	-3.29)	614.55	(222,12)	549.40	(177,15)	523.92	(115,15)	509.29	(153,18)	462.53	(163,15)
130(	-2.44,	-2.91)	669.97	(116,15)	603.36	(222,12)	561.24	(245,15)	407.80	(256,15)	381.13	(115,12)

131(	-2.91,	-2.44)	524.26	(115,12)	499.91	(192,15)	476.90	(207,15)	462.55	(192,12)	435.47	(177,18)
132(	-3.29,	-1.90)	592.62	(192,18)	495.52	(219, 9)	485.67	(289,12)	474.34	(219,12)	457.94	(115,12)
133(	-3.57,	-1.30)	648.53	(146,12)	530.10	(177,12)	508.52	(246,15)	504.01	(228,18)	503.92	(82,12)
134(	-3.74,	-.66)	560.88	(178,18)	532.75	(146,15)	525.88	(136,12)	396.63	(228,15)	390.34	(206,15)
135(	-3.80,	.00)	812.99	(178,18)	478.87	(204,15)	467.70	(289,15)	455.54	(123,12)	450.41	(229,12)
136(	-3.74,	.66)	576.90	(79,12)	542.55	(124,18)	519.54	(124,15)	513.58	(206,12)	466.46	(229,12)
137(	-3.57,	1.30)	742.79	(180,15)	513.80	(124, 9)	499.29	(181,18)	494.10	(251,18)	491.47	(213,18)
138(	-3.29,	1.90)	505.01	(181,15)	474.13	(202,12)	472.14	(213,15)	465.19	(181,18)	428.42	(180,12)
139(	-2.91,	2.44)	592.61	(169,12)	578.97	(275,12)	511.15	(229,15)	471.28	(173,15)	454.90	(122,12)
140(	-2.44,	2.91)	546.65	(188,12)	519.32	(275,12)	480.27	(250,15)	462.74	(181,12)	451.43	(193,15)
141(	-1.90,	3.29)	785.62	(181,12)	606.51	(332,15)	466.53	(169,15)	385.62	(218,15)	356.27	(188,12)
142(	-1.30,	3.57)	596.72	(125,15)	489.43	(136,18)	366.99	(214,15)	348.98	(174,15)	300.54	(169,18)
143(	-.66,	3.74)	722.91	(125,15)	514.75	(158,12)	483.99	(43,15)	345.59	(265,15)	296.48	(198,18)
144(	.00,	3.80)	512.26	(158,12)	380.31	(136,15)	373.91	(29,12)	357.66	(119, 9)	343.08	(209,15)
145(	1.08,	6.11)	436.91	(188,15)	412.99	(73,15)	384.72	(136,15)	346.39	(164,12)	338.55	(139,12)
146(	2.12,	5.83)	382.14	(125, 9)	368.39	(164,12)	366.67	(139,12)	343.34	(183,12)	338.79	(299,12)
147(	3.10,	5.37)	486.13	(251,12)	429.17	(264,12)	404.01	(270,12)	399.62	(14,12)	366.66	(126,15)
148(	3.99,	4.75)	510.39	(56,12)	490.94	(264,12)	466.87	(137,15)	440.61	(159,12)	416.27	(329,15)
149(	4.75,	3.99)	439.39	(260,15)	437.82	(328,15)	372.52	(264,15)	343.42	(302,12)	329.06	(314,15)
150(	5.37,	3.10)	475.80	(210,12)	438.18	(223,12)	340.77	(160,18)	335.88	(78,15)	335.55	(220,12)
151(	5.83,	2.12)	706.12	(174,18)	653.62	(25,18)	647.87	(165,12)	645.22	(130,15)	595.43	(105,12)
152(	6.11,	1.08)	649.15	(209,18)	573.18	(86, 6)	562.73	(39, 3)	552.88	(38,15)	542.95	(88,12)
153(	6.20,	.00)	819.61	(113,18)	711.88	(10, 3)	604.23	(86,21)	553.88	(25, 3)	549.28	(105,15)
154(	6.11,	-1.08)	677.77	(166,15)	632.21	(131,18)	536.76	(87, 3)	520.85	(293, 3)	516.70	(81,12)
155(	5.83,	-2.12)	678.72	(20,15)	663.10	(222,18)	624.37	(77,18)	621.88	(223,18)	589.06	(187,18)
156(	5.37,	-3.10)	783.22	(98,21)	731.61	(283,15)	681.10	(98,24)	657.96	(70, 9)	545.95	(70,12)
157(	4.75,	-3.99)	770.08	(221,18)	669.02	(353, 3)	644.50	(81,18)	625.49	(90,12)	509.74	(267,12)
158(	3.99,	-4.75)	614.17	(341, 3)	535.28	(59,21)	520.95	(94, 9)	519.99	(224,24)	518.97	(280,15)
159(	3.10,	-5.37)	618.17	(219,18)	575.47	(361,15)	565.92	(308,15)	515.86	(278,15)	505.62	(148,18)
160(	2.12,	-5.83)	514.68	(352,12)	495.86	(292,18)	475.27	(335, 3)	456.51	(340,18)	450.51	(186, 9)
161(	1.08,	-6.11)	549.63	(249, 3)	533.84	(340,21)	470.70	(334,21)	449.56	(205,15)	448.19	(13,15)
162(	.00,	-6.20)	762.10	(211,21)	488.96	(361,21)	373.78	(195, 3)	360.34	(42, 3)	358.68	(244,15)
163(	-1.08,	-6.11)	531.83	(168, 6)	497.40	(290,15)	479.28	(153,12)	420.62	(150, 3)	388.20	(255,18)
164(	-2.12,	-5.83)	513.19	(13,12)	503.57	(227,18)	495.95	(256,18)	486.97	(255,21)	484.21	(304,15)
165(	-3.10,	-5.37)	492.09	(255,24)	463.86	(153,18)	454.71	(163, 3)	375.46	(290,12)	366.97	(177,15)
166(	-3.99,	-4.75)	431.26	(116,15)	418.13	(245,15)	356.04	(222,12)	274.36	(115, 9)	273.36	(177,18)
167(	-4.75,	-3.99)	419.24	(177,18)	370.54	(115,12)	335.01	(116,12)	310.91	(207,15)	300.01	(192,12)
168(	-5.37,	-3.10)	620.98	(192,18)	469.42	(205,18)	408.05	(289,12)	397.00	(212, 9)	390.36	(219, 9)
169(	-5.83,	-2.12)	462.29	(79,15)	461.13	(146,12)	423.60	(274,15)	414.37	(12,12)	413.31	(228,18)
170(	-6.11,	-1.08)	598.83	(79,21)	585.80	(36,21)	482.87	(157,24)	470.47	(64,18)	443.00	(8,18)
171(	-6.20,	.00)	648.80	(178,18)	430.86	(289,15)	393.32	(229,12)	342.57	(123,12)	330.91	(243,12)
172(	-6.11,	1.08)	504.85	(79,12)	368.29	(229,12)	350.72	(124,18)	345.24	(124,15)	337.74	(124,12)
173(	-5.83,	2.12)	503.87	(180,15)	494.21	(124, 9)	483.39	(251,18)	402.80	(181,18)	386.19	(213,18)
174(	-5.37,	3.10)	407.17	(181,18)	381.77	(181,15)	320.25	(193,12)	317.64	(157,15)	307.68	(213,15)
175(	-4.75,	3.99)	403.58	(122,12)	402.68	(169,12)	381.52	(275,12)	350.26	(102,18)	337.10	(122, 9)
176(	-3.99,	4.75)	532.01	(350,24)	516.78	(30,24)	514.45	(118,12)	509.15	(73,12)	484.38	(103,18)
177(	-3.10,	5.37)	620.26	(332,15)	571.16	(181,12)	488.95	(214,12)	426.08	(309,15)	406.57	(136,18)
178(	-2.12,	5.83)	520.38	(136,18)	427.70	(19,15)	327.58	(125,15)	325.91	(103,12)	321.36	(309,15)
179(	-1.08,	6.11)	454.07	(43,15)	432.15	(125,15)	391.50	(265,15)	367.69	(158,12)	293.89	(66,12)
180(	.00,	6.20)	344.51	(119, 9)	290.61	(265,15)	289.97	(158,12)	282.73	(136,15)	281.04	(29,12)

FIVE HIGHEST 8-HOUR SO2 CONCENTRATIONS(ENDING @ JULIAN DAY, HOUR)
(MICROGRAMS/M**3)

RECEPTOR			1		2		3		4		5	
1(	.16,	.89)	388.86	(199,16)	369.59	(209,16)	284.85	(139,16)	236.23	(164,16)	140.19	(193,16)

2(	.31,	.85)	361.39	(139,16)	245.13	(164,16)	210.67	(207,16)	130.50	(199,16)	124.37	(209,16)
3(	.45,	.78)	238.93	(139,16)	220.99	(207,16)	99.76	(164,16)	67.13	(185,16)	54.72	(197,16)
4(	.58,	.69)	192.97	(185,16)	104.96	(207,16)	92.39	(142,16)	85.26	(139,16)	36.27	(160,16)
5(	.69,	.58)	259.13	(185,16)	118.87	(142,16)	107.89	(174,16)	97.68	(198,16)	49.02	(160,16)
6(	.78,	.45)	223.17	(198,16)	163.83	(185,16)	158.54	(174,16)	64.23	(142,16)	29.03	(247,16)
7(	.85,	.31)	237.63	(198,16)	105.08	(174,16)	44.15	(185,16)	43.30	(247,16)	40.06	(219,16)
8(	.89,	.16)	119.74	(198,16)	110.58	(136,16)	105.99	(219,16)	30.17	(174,16)	27.49	(160,16)
9(	.90,	.00)	216.46	(136,16)	112.92	(219,16)	23.27	(198,16)	17.29	(156,16)	14.01	(210,16)
10(	.89,	-.16)	203.90	(136,16)	81.05	(205,16)	53.49	(219,16)	14.24	(223,16)	11.70	(247,16)
11(	.85,	-.31)	207.39	(205,16)	124.51	(136,16)	51.96	(185,16)	32.47	(247,16)	19.13	(155,16)
12(	.78,	-.45)	240.53	(205,16)	240.15	(185,16)	163.48	(136,16)	102.42	(187,16)	89.37	(203,16)
13(	.69,	-.58)	480.24	(185,16)	315.72	(203,16)	255.79	(136,16)	246.44	(187,16)	142.37	(205,16)
14(	.58,	-.69)	544.86	(203,16)	461.89	(185,16)	333.55	(142,16)	281.04	(187,16)	208.08	(136,16)
15(	.45,	-.78)	489.83	(203,16)	444.68	(142,16)	293.68	(150,16)	207.81	(185,16)	146.53	(187,16)
16(	.31,	-.85)	263.09	(142,16)	237.73	(150,16)	228.00	(203,16)	150.51	(135,16)	102.43	(179,16)
17(	.16,	-.89)	141.82	(150,16)	111.34	(208,16)	86.70	(179,16)	57.24	(142,16)	49.50	(203,16)
18(	.00,	-.90)	209.08	(208,16)	59.33	(150,16)	24.81	(179,16)	14.43	(163,16)	13.24	(204,16)
19(	-.16,	-.89)	194.67	(208,16)	83.37	(163,16)	14.72	(150,16)	12.02	(204,16)	11.75	(168,16)
20(	-.31,	-.85)	184.00	(163,16)	85.08	(208,16)	64.58	(204,16)	33.35	(146,16)	15.03	(177,16)
21(	-.45,	-.78)	187.59	(163,16)	170.56	(204,16)	137.17	(146,16)	79.74	(228,16)	59.34	(207,16)
22(	-.58,	-.69)	232.73	(146,16)	198.96	(204,16)	183.30	(207,16)	179.10	(228,16)	139.24	(201,16)
23(	-.69,	-.58)	247.72	(207,16)	221.66	(222,16)	203.93	(201,16)	186.75	(146,16)	183.21	(228,16)
24(	-.78,	-.45)	227.21	(143,16)	206.51	(222,16)	205.36	(202,16)	201.86	(115,16)	200.62	(178,16)
25(	-.85,	-.31)	235.75	(177,16)	227.21	(143,16)	166.53	(115,16)	151.43	(202,16)	132.73	(179,16)
26(	-.89,	-.16)	245.84	(179,16)	242.67	(204,16)	190.31	(206,16)	177.44	(177,16)	121.86	(227,16)
27(	-.90,	.00)	268.50	(204,16)	226.60	(227,16)	214.71	(179,16)	210.10	(206,16)	68.97	(177,16)
28(	-.89,	.16)	200.87	(227,16)	148.53	(204,16)	109.56	(206,16)	108.97	(213,16)	86.82	(179,16)
29(	-.85,	.31)	125.12	(213,16)	85.56	(227,16)	64.01	(180,16)	35.41	(204,16)	34.42	(193,16)
30(	-.78,	.45)	85.53	(180,16)	72.39	(213,16)	60.61	(125,16)	54.82	(201,16)	44.31	(164,16)
31(	-.69,	.58)	226.77	(201,16)	224.06	(125,16)	197.99	(164,16)	175.11	(169,16)	114.08	(214,16)
32(	-.58,	.69)	318.27	(201,16)	312.55	(164,16)	306.57	(125,16)	269.15	(214,16)	130.30	(213,16)
33(	-.45,	.78)	304.59	(214,16)	239.99	(164,16)	217.24	(125,16)	206.29	(201,16)	108.13	(174,16)
34(	-.31,	.85)	166.18	(214,16)	153.11	(174,16)	142.42	(209,16)	113.12	(178,16)	112.36	(199,16)
35(	-.16,	.89)	404.78	(209,16)	370.15	(199,16)	168.45	(193,16)	138.14	(178,16)	96.87	(174,16)
36(	.00,	.90)	542.42	(209,16)	541.42	(199,16)	222.51	(193,16)	117.89	(139,16)	100.01	(164,16)
37(	.26,	1.48)	419.30	(164,16)	344.99	(139,16)	265.72	(199,16)	265.29	(209,16)	154.20	(193,16)
38(	.51,	1.41)	485.23	(164,16)	484.88	(139,16)	221.74	(209,16)	212.18	(207,16)	196.13	(197,16)
39(	.75,	1.30)	441.85	(197,16)	365.77	(139,16)	297.86	(209,16)	280.32	(207,16)	264.10	(126,16)
40(	.96,	1.15)	699.27	(197,16)	495.75	(317,16)	476.41	(145,16)	433.56	(161,16)	420.43	(137,16)
41(	1.15,	.96)	609.29	(65, 8)	454.19	(145,16)	417.30	(174,16)	403.50	(161,16)	394.44	(159,16)
42(	1.30,	.75)	526.63	(174,16)	311.38	(210,16)	263.75	(198,16)	248.67	(247,16)	240.44	(159,16)
43(	1.41,	.51)	309.28	(247,16)	291.26	(174,16)	284.10	(198,16)	241.89	(156,16)	206.43	(139,16)
44(	1.48,	.26)	322.41	(219,16)	223.83	(156,16)	182.87	(160,16)	174.31	(247,16)	155.23	(198,16)
45(	1.50,	.00)	354.84	(219,16)	243.46	(136,16)	188.19	(156,16)	73.47	(222,16)	73.05	(210,16)
46(	1.48,	-.26)	229.90	(136,16)	215.40	(219,16)	125.86	(247,16)	114.13	(156,16)	86.32	(205,16
47(	1.41,	-.51)	391.52	(162,16)	316.62	(247,16)	259.31	(155,16)	223.86	(205,16)	200.25	(176, 6)
48(	1.30,	-.75)	577.19	(162,16)	498.91	(155,16)	361.59	(185,16)	315.98	(176,16)	305.83	(247,16)
49(	1.15,	-.96)	556.85	(203,16)	473.16	(185,16)	444.13	(187,16)	387.11	(155,16)	305.60	(136,16)
50(	.96,	-1.15)	728.59	(203,16)	469.70	(187,16)	383.16	(142,16)	369.71	(185,16)	313.64	(244,16)
51(	.75,	-1.30)	500.35	(142,16)	405.20	(203,16)	243.76	(150,16)	138.72	(185,16)	124.88	(138,16)
52(	.51,	-1.41)	324.65	(142,16)	228.74	(150,16)	166.48	(179,16)	156.45	(203,16)	123.33	(252,16)
53(	.26,	-1.48)	558.07	(150,16)	476.33	(179,16)	350.70	(135,16)	394.26	(205,16)	302.34	(244,16)
54(	.00,	-1.50)	403.07	(150,16)	325.16	(208,16)	236.30	(204,16)	227.66	(221,16)	219.77	(179,16)
55(	-.26,	-1.48)	223.58	(208,16)	124.21	(163,16)	114.59	(168,16)	107.37	(150,16)	88.84	(218,16)
56(	-.51,	-1.41)	351.04	(163,16)	275.93	(141,16)	199.74	(218,16)	168.85	(217,16)	167.49	(168,16)
57(	-.75,	-1.30)	546.17	(163,16)	433.46	(115,16)	380.31	(222,16)	321.99	(177,16)	319.31	(141,16)
58(	-.96,	-1.15)	471.65	(115,16)	424.96	(163,16)	410.02	(116,16)	403.70	(222,16)	325.74	(192,16)

59(	-1.15,	-.96)	441.03	(207,16)	331.04	(115,16)	273.29	(201,16)	253.41	(228,16)	247.95	(192,16)
60(	-1.30,	-.75)	453.39	(115,16)	326.28	(207,16)	299.41	(202,16)	273.26	(136,16)	270.68	(178,16)
61(	-1.41,	-.51)	334.78	(115,16)	294.56	(177,16)	272.43	(178,16)	236.50	(202,16)	227.40	(146,16)
62(	-1.48,	-.26)	331.52	(178,16)	286.85	(146,16)	261.16	(204,16)	259.59	(206,16)	189.04	(177,16)
63(	-1.50,	.00)	420.75	(178,16)	390.37	(204,16)	305.49	(206,16)	277.09	(227,16)	146.53	(179,16)
64(	-1.48,	.26)	307.05	(204,16)	281.64	(213,16)	254.74	(178,16)	216.87	(124,16)	192.28	(206,16)
65(	-1.41,	.51)	336.48	(213,16)	291.75	(180,16)	176.13	(124,16)	116.28	(204,16)	115.35	(193,16)
66(	-1.30,	.75)	195.82	(180,16)	186.17	(213,16)	107.19	(124,16)	106.88	(229,16)	94.75	(181,16)
67(	-1.15,	.96)	248.15	(201,16)	233.77	(169,16)	144.81	(173,16)	139.19	(122,16)	131.82	(275,16)
68(	-.96,	1.15)	374.06	(201,16)	226.86	(169,16)	215.12	(164,16)	180.54	(125,16)	173.38	(213,16)
69(	-.75,	1.30)	262.50	(201,16)	227.78	(214,16)	186.91	(178,16)	174.49	(169,16)	170.30	(164,16)
70(	-.51,	1.41)	275.21	(174,16)	192.38	(178,16)	191.47	(125,16)	160.46	(214,16)	120.78	(169,16)
71(	-.26,	1.48)	252.53	(209,16)	240.85	(199,16)	240.42	(178,16)	186.70	(174,16)	180.35	(193,16)
72(	.00,	1.50)	359.35	(199,16)	347.31	(209,16)	283.31	(193,16)	164.10	(164,16)	148.38	(158,16)
73(	.35,	1.97)	364.79	(168,16)	341.94	(139,16)	193.80	(209,16)	174.25	(199,16)	152.33	(172,16)
74(	.68,	1.88)	495.17	(168,16)	462.46	(139,16)	293.29	(209,16)	275.45	(125,16)	274.57	(197,16)
75(	1.00,	1.73)	527.28	(197,16)	441.57	(209,16)	398.38	(126,16)	307.32	(112,16)	305.17	(299,16)
76(	1.29,	1.53)	612.16	(197,16)	424.65	(126,16)	314.71	(137,16)	302.10	(175,16)	284.24	(87,16)
77(	1.53,	1.29)	469.58	(65, 8)	455.87	(159,16)	423.32	(197,16)	418.99	(145,16)	374.71	(210,16)
78(	1.73,	1.00)	556.39	(174,16)	484.65	(210,16)	456.44	(159,16)	356.30	(87,16)	302.77	(200,16)
79(	1.88,	.68)	339.97	(156,16)	307.21	(247,16)	287.37	(198,16)	284.94	(174,16)	273.05	(200,16)
80(	1.97,	.35)	342.30	(156,16)	242.73	(160,16)	258.63	(219,16)	219.32	(215,16)	218.28	(269,16)
81(	2.00,	.00)	397.31	(156,16)	291.62	(219,16)	189.34	(136,16)	171.57	(176,16)	162.92	(230,16)
82(	1.97,	-.35)	305.99	(156,16)	237.86	(131,16)	235.66	(219,16)	226.40	(176,16)	224.05	(166,16)
83(	1.88,	-.68) *	811.04	(162,16)	584.68	(20,16)	387.39	(155,16)	386.63	(247,16)	380.41	(100,16)
84(	1.73,	-1.00)	694.93	(162,16)	588.28	(155,16)	326.38	(185,16)	325.73	(247,16)	317.03	(176,16)
85(	1.53,	-1.29)	520.67	(203,16)	503.46	(187,16)	461.43	(155,16)	397.60	(185,16)	245.03	(138,16)
86(	1.29,	-1.53)	621.63	(203,16)	470.90	(187,16)	389.91	(244,16)	318.83	(138,16)	308.16	(91,16)
87(	1.00,	-1.73)	403.47	(142,16)	315.76	(203,16)	197.17	(278,16)	192.82	(150,16)	189.10	(106,16)
88(	.68,	-1.88)	258.55	(142,16)	237.53	(150,16)	228.51	(179,16)	197.03	(252,16)	192.52	(138,16)
89(	.35,	-1.97)	430.88	(150,16)	372.91	(179,16)	231.10	(205,16)	211.36	(244,16)	165.17	(138,16)
90(	.00,	-2.00)	391.58	(150,16)	277.91	(208,16)	271.00	(204,16)	221.67	(221,16)	204.91	(179,16)
91(	-.35,	-1.97)	360.17	(218,16)	354.49	(290,16)	255.43	(141,16)	239.06	(168,16)	221.56	(217,16)
92(	-.68,	-1.88)	552.35	(181,16)	434.02	(218,16)	415.04	(217,16)	353.51	(163,16)	280.93	(168,16)
93(	-1.00,	-1.73)	546.45	(163,16)	497.43	(115,16)	397.47	(222,16)	370.55	(141,16)	351.51	(168,16)
94(	-1.29,	-1.53)	602.66	(116,16)	523.10	(115,16)	441.95	(222,16)	427.60	(163,16)	370.54	(192,16)
95(	-1.53,	-1.29)	430.87	(192,16)	373.34	(115,16)	320.20	(207,16)	255.51	(163,16)	242.49	(219,16)
96(	-1.73,	-1.00)	431.10	(115,16)	376.66	(219,16)	284.55	(202,16)	271.26	(177,16)	266.45	(192,16)
97(	-1.88,	-.68)	348.04	(146,16)	319.96	(177,16)	290.24	(115,16)	287.39	(178,16)	234.08	(202,16)
98(	-1.97,	-.35)	427.34	(146,16)	358.20	(178,16)	262.60	(206,16)	192.49	(204,16)	167.42	(177,16)
99(	-2.00,	.00)	488.54	(178,16)	321.23	(206,16)	317.60	(204,16)	193.51	(122,16)	193.04	(146,16)
100(	-1.97,	.35)	356.25	(124,16)	306.28	(178,16)	284.33	(213,16)	262.27	(204,16)	258.58	(180,16)
101(	-1.88,	.68)	407.98	(180,16)	393.80	(213,16)	286.47	(124,16)	172.36	(181,16)	159.85	(202,16)
102(	-1.73,	1.00)	287.23	(180,16)	252.58	(213,16)	189.82	(181,16)	170.67	(124,16)	163.39	(229,16)
103(	-1.53,	1.29)	353.74	(169,16)	247.65	(122,16)	245.52	(275,16)	224.51	(173,16)	203.30	(180,16)
104(	-1.29,	1.53)	354.95	(169,16)	311.95	(201,16)	279.41	(250,16)	235.45	(213,16)	217.78	(188,16)
105(	-1.00,	1.73)	268.42	(169,16)	247.50	(181,16)	230.85	(214,16)	207.13	(201,16)	187.55	(193,16)
106(	-.68,	1.88)	262.52	(125,16)	228.76	(174,16)	196.76	(277,16)	196.31	(169,16)	178.42	(214,16)
107(	-.35,	1.97)	266.74	(125,16)	193.49	(178,16)	174.77	(158,16)	156.43	(209,16)	153.46	(199,16)
108(	.00,	2.00)	260.35	(158,16)	238.19	(199,16)	226.44	(209,16)	191.82	(193,16)	144.82	(125,16)
109(	.66,	3.74)	292.00	(139,16)	234.79	(164,16)	197.84	(188,16)	189.76	(182,16)	188.16	(136,16)
110(	1.30,	3.57)	388.13	(164,16)	339.20	(139,16)	315.07	(306,16)	304.78	(74,16)	304.20	(125,16)
111(	1.90,	3.29)	674.02	(359,16)	528.18	(93,24)	499.00	(282,16)	469.64	(358,24)	436.86	(241,16)
112(	2.44,	2.91)	549.83	(316,16)	500.27	(126,16)	497.15	(76,24)	483.60	(197,16)	479.58	(224,16)
113(	2.91,	2.44)	316.55	(159,16)	270.25	(264,16)	268.01	(87,16)	259.00	(197,16)	256.05	(260,16)
114(	3.29,	1.90)	424.30	(159,16)	401.79	(210,16)	397.55	(174,16)	343.97	(87,16)	272.63	(223,16)
115(	3.57,	1.30)	370.13	(248,16)	339.28	(210,16)	327.60	(156,16)	310.20	(140,16)	309.90	(160,16)

116(	3.74,	.66)	616.71	(86,16)	*	612.44	(236,16)	542.14	(86, 8)	532.52	(216,16)	458.56	(269,16)
117(	3.80,	.00)	568.56	(86,24)		513.25	(10, 8)	424.76	(230,16)	412.22	(38,24)	401.00	(105,16)
118(	3.74,	-.66)	431.58	(99,24)		403.21	(77,16)	375.00	(166,16)	352.00	(131,16)	350.45	(99,16)
119(	3.57,	-1.30)	562.69	(162,16)		486.45	(20,16)	418.07	(32,16)	388.80	(280,16)	362.48	(231,16)
120(	3.29,	-1.90)	738.55	(98,24)		609.17	(162,16)	526.20	(70,16)	454.61	(155,16)	425.55	(99, 8)
121(	2.91,	-2.44)	519.30	(353, 8)		501.11	(90,16)	415.03	(187,16)	406.83	(203,16)	395.41	(267,16)
122(	2.44,	-2.91)	362.07	(203,16)		337.69	(280,16)	310.83	(187,16)	295.27	(244,16)	293.02	(291,16)
123(	1.90,	-3.29)	429.92	(106,16)		418.10	(278,16)	382.33	(291,16)	365.23	(47,16)	355.99	(335,16)
124(	1.30,	-3.57)	360.70	(289,16)		348.25	(135,16)	322.06	(291,16)	309.61	(335,16)	293.15	(47,16)
125(	.66,	-3.74)	480.74	(150,16)		375.02	(205,16)	319.98	(179,16)	314.63	(135,16)	302.97	(13,16)
126(	.00,	-3.80)	314.88	(150,16)		314.10	(208,16)	300.50	(196,16)	290.08	(221,16)	237.51	(249,16)
127(	-.66,	-3.74)	641.99	(290,16)		386.79	(218,16)	280.95	(217,16)	279.19	(255,16)	260.93	(41,24)
128(	-1.30,	-3.57)	426.79	(141,16)		403.16	(218,16)	401.05	(217,16)	269.56	(290,16)	247.29	(227,16)
129(	-1.90,	-3.29)	335.45	(163,16)		315.10	(115,16)	264.52	(227,16)	262.52	(168,16)	235.02	(222,16)
130(	-2.44,	-2.91)	427.60	(116,16)		294.82	(115,16)	262.63	(222,16)	241.79	(245,16)	231.74	(163,16)
131(	-2.91,	-2.44)	393.77	(192,16)		328.50	(116,16)	287.97	(115,16)	217.00	(163,16)	199.21	(219,16)
132(	-3.29,	-1.90)	373.58	(219,16)		321.33	(115,16)	283.84	(116,16)	277.75	(192,16)	256.54	(177,16)
133(	-3.57,	-1.30)	349.62	(146,16)		274.26	(153,16)	272.92	(177,16)	238.85	(288,16)	230.28	(274,16)
134(	-3.74,	-.66)	396.97	(146,16)		253.58	(206,16)	225.24	(178,16)	157.55	(304,16)	150.13	(228,16)
135(	-3.80,	.00)	344.44	(178,16)		291.63	(206,16)	258.51	(289,16)	214.52	(122,16)	213.58	(229,16)
136(	-3.74,	.66)	468.42	(124,16)		309.95	(180,16)	264.12	(213,16)	240.47	(206,16)	219.50	(178,16)
137(	-3.57,	1.30)	468.94	(180,16)		462.60	(213,16)	382.76	(124,16)	206.87	(181,16)	174.61	(202,16)
138(	-3.29,	1.90)	324.50	(213,16)		322.65	(180,16)	270.07	(181,16)	231.48	(250,16)	217.81	(275,16)
139(	-2.91,	2.44)	344.75	(122,16)		327.77	(169,16)	295.09	(275,16)	220.62	(180,16)	220.34	(250,16)
140(	-2.44,	2.91)	346.36	(250,16)		324.98	(169,16)	267.81	(201,16)	265.41	(193,16)	240.51	(102,16)
141(	-1.90,	3.29)	329.48	(218,16)		294.61	(181,16)	243.25	(372,16)	241.54	(169,16)	238.09	(193,16)
142(	-1.30,	3.57)	233.57	(125,16)		198.18	(332,16)	192.67	(277,16)	190.60	(214,16)	182.83	(169,16)
143(	-.66,	3.74)	292.14	(125,16)		204.49	(158,16)	182.77	(200,16)	168.08	(43,16)	147.35	(178,16)
144(	.00,	3.80)	274.73	(158,16)		182.30	(125,16)	179.18	(102,16)	150.77	(265,16)	143.54	(136,16)
145(	1.08,	6.11)	178.53	(139,16)		170.71	(188,16)	166.41	(329,16)	154.87	(73,16)	144.27	(136,16)
146(	2.12,	5.83)	223.93	(164,16)		200.15	(139,16)	194.13	(277,16)	184.21	(306,16)	161.02	(125,16)
147(	3.10,	5.37)	219.55	(209,16)		218.78	(264,16)	217.96	(14,16)	209.09	(126,16)	182.30	(251,16)
148(	3.99,	4.75)	284.73	(126,16)		293.40	(268,16)	236.32	(56,16)	230.03	(197,16)	220.34	(316,16)
149(	4.75,	3.99)	249.54	(264,16)		231.93	(159,16)	221.18	(260,16)	216.18	(144,16)	205.65	(302,16)
150(	5.37,	3.10)	297.30	(159,16)		271.61	(210,16)	241.47	(174,16)	238.34	(87,16)	221.60	(248,16)
151(	5.83,	2.12)	540.29	(140,16)		393.78	(165,16)	371.97	(248,16)	351.74	(295,16)	338.33	(355, 8)
152(	6.11,	1.08)	428.68	(86,16)		418.02	(236,16)	394.11	(86, 8)	365.28	(216,16)	335.05	(294,16)
153(	6.20,	.00)	442.12	(10, 8)		436.13	(86,24)	361.93	(38,24)	323.60	(4,16)	302.79	(105,16)
154(	6.11,	-1.08)	366.29	(326, 8)		344.58	(99,24)	291.69	(293, 8)	290.72	(81,16)	276.43	(99,16)
155(	5.83,	-2.12)	342.57	(32,16)		331.50	(162,16)	323.85	(20,16)	297.91	(269,16)	295.61	(99,16)
156(	5.37,	-3.10)	624.60	(98,24)		444.68	(70,16)	381.63	(99, 8)	364.81	(162,16)	348.25	(283,16)
157(	4.75,	-3.99)	432.36	(353, 8)		395.72	(90,16)	338.90	(81,24)	319.91	(221,24)	267.29	(267,16)
158(	3.99,	-4.75)	273.17	(280,16)		254.15	(335, 8)	239.74	(57, 8)	230.34	(341, 8)	214.14	(203,16)
159(	3.10,	-5.37)	326.42	(47,16)		316.19	(361,16)	314.01	(278,16)	292.13	(106,16)	288.10	(335,16
160(	2.12,	-5.83)	287.00	(335,16)		267.32	(249,16)	254.94	(335, 8)	246.74	(135, 8)	246.31	(352 6)
161(	1.08,	-6.11)	308.22	(150,16)		291.31	(249, 8)	286.05	(354,24)	265.98	(340,24)	236.13	(205,16)
162(	.00,	-6.20)	305.87	(211,24)		254.01	(78, 8)	226.37	(186,16)	224.94	(361,24)	207.79	(41,24)
163(	-1.08,	-6.11)	452.74	(290,16)		245.24	(218,16)	225.12	(41,24)	217.95	(150, 8)	217.46	(255,16)
164(	-2.12,	-5.83)	358.84	(218,16)		349.99	(141,16)	311.05	(217,16)	271.01	(362, 8)	270.31	(255,24)
165(	-3.10,	-5.37)	235.39	(115,16)		225.28	(163,16)	217.43	(255,24)	189.09	(78,16)	182.35	(168,16)
166(	-3.99,	-4.75)	279.79	(116,16)		187.31	(245,16)	172.67	(115,16)	160.24	(12,24)	155.63	(141,16)
167(	-4.75,	-3.99)	253.85	(116,16)		226.25	(192,16)	211.57	(115,16)	148.38	(288,16)	145.47	(257,16)
168(	-5.37,	-3.10)	233.16	(288,16)		232.70	(219,16)	230.81	(116,16)	216.24	(115,16)	193.62	(305,16)
169(	-5.83,	-2.12)	229.83	(157,16)		227.63	(288,16)	225.65	(146,16)	210.61	(116,24)	194.15	(274,16)
170(	-6.11,	-1.08)	458.23	(79,24)		367.63	(36,24)	277.49	(64,24)	276.14	(239,24)	263.10	(213, 8)
171(	-6.20,	.00)	230.61	(289,16)		212.98	(229,16)	201.42	(178,16)	174.34	(151,16)	174.34	(123,16)
172(	-6.11,	1.08)	325.24	(124,16)		204.62	(180,16)	193.31	(79,16)	193.33	(213,16)	178.[illegible]	(229,16)

173(	-5.83,	2.12)	334.80	(213,16)	322.08	(180,16)	265.21	(124,16)	164.90	(11,16)	127.48	(181,16)
174(	-5.37,	3.10)	228.87	(213,16)	215.05	(181,16)	213.37	(180,16)	180.06	(193,16)	178.97	(250,16)
175(	-4.75,	3.99)	276.14	(122,16)	241.76	(132,16)	216.25	(169,16)	207.67	(275,16)	194.95	(117,24)
176(	-3.99,	4.75)	306.91	(103,24)	296.72	(250,16)	272.08	(219,16)	231.23	(73,16)	227.54	(102,16)
177(	-3.10,	5.37)	369.99	(214,16)	306.90	(332,16)	240.12	(92,16)	215.26	(103,16)	214.18	(181,16)
178(	-2.12,	5.83)	200.11	(332,16)	192.30	(19,16)	177.64	(92,16)	169.27	(103,16)	156.43	(214,16)
179(	-1.08,	6.11)	192.99	(66,16)	180.65	(43,16)	172.69	(125,16)	154.70	(73,16)	154.66	(240,24)
180(	.00,	6.20)	153.07	(158,16)	148.39	(143,24)	137.53	(102,16)	128.30	(265,16)	124.03	(66,16)

FIVE HIGHEST 24-HOUR SO2 CONCENTRATIONS(ENDING ON JULIAN DAY, HOUR)
(MICROGRAMS/M**3)

RECEPTOR			1		2		3		4		5	
1(	.16,	.89)	129.95	(199,24)	123.20	(209,24)	94.95	(139,24)	78.74	(164,24)	46.73	(193,24)
2(	.31,	.85)	120.46	(139,24)	81.71	(164,24)	70.22	(207,24)	43.50	(199,24)	41.46	(209,24)
3(	.45,	.78)	79.65	(139,24)	73.66	(207,24)	33.26	(164,24)	22.38	(185,24)	18.27	(197,24)
4(	.58,	.69)	64.32	(185,24)	34.99	(207,24)	30.80	(142,24)	28.42	(139,24)	12.10	(160,24)
5(	.69,	.58)	86.38	(185,24)	39.62	(142,24)	35.96	(174,24)	32.55	(198,24)	16.46	(160,24)
6(	.78,	.45)	74.39	(198,24)	58.61	(185,24)	52.85	(174,24)	21.41	(142,24)	9.68	(247,24)
7(	.85,	.31)	79.21	(198,24)	35.03	(174,24)	14.72	(185,24)	14.43	(247,24)	13.35	(219,24)
8(	.89,	.16)	39.91	(198,24)	36.86	(136,24)	35.33	(219,24)	10.06	(174,24)	9.16	(160,24)
9(	.90,	.00)	72.15	(136,24)	37.64	(219,24)	7.76	(198,24)	5.76	(156,24)	4.67	(210,24)
10(	.89,	-.16)	67.97	(136,24)	27.02	(205,24)	17.83	(219,24)	4.75	(223,24)	3.90	(247,24)
11(	.85,	-.31)	69.13	(205,24)	41.50	(136,24)	17.32	(185,24)	10.82	(247,24)	6.38	(155,24)
12(	.78,	-.45)	80.18	(205,24)	80.05	(185,24)	58.49	(136,24)	34.14	(187,24)	29.79	(203,24)
13(	.69,	-.58)	160.08	(185,24)	105.24	(203,24)	85.26	(136,24)	82.15	(187,24)	47.46	(205,24)
14(	.58,	-.69)	181.62	(203,24)	153.99	(185,24)	111.19	(142,24)	93.68	(187,24)	69.36	(136,24)
15(	.45,	-.78)	163.43	(203,24)	188.23	(142,24)	97.89	(150,24)	69.78	(185,24)	48.84	(187,24)
16(	.31,	-.85)	87.70	(142,24)	79.25	(150,24)	76.27	(203,24)	51.59	(135,24)	34.55	(179,24)
17(	.16,	-.89)	47.28	(150,24)	37.37	(208,24)	28.95	(179,24)	19.08	(142,24)	16.50	(203,24)
18(	.00,	-.90)	69.70	(208,24)	19.78	(150,24)	8.27	(179,24)	4.81	(163,24)	4.41	(204,24)
19(	-.16,	-.89)	64.89	(208,24)	27.79	(163,24)	4.94	(150,24)	4.01	(204,24)	3.92	(168,24)
20(	-.31,	-.85)	61.33	(163,24)	28.36	(208,24)	21.53	(204,24)	11.12	(146,24)	5.01	(177,24)
21(	-.45,	-.78)	62.53	(163,24)	56.85	(204,24)	45.72	(146,24)	26.58	(228,24)	19.78	(207,24)
22(	-.58,	-.69)	77.58	(146,24)	66.32	(204,24)	61.13	(207,24)	59.70	(228,24)	46.08	(201,24)
23(	-.69,	-.58)	82.57	(207,24)	73.89	(222,24)	67.98	(201,24)	62.25	(146,24)	61.07	(228,24)
24(	-.78,	-.45)	75.74	(143,24)	68.84	(222,24)	68.45	(202,24)	67.29	(115,24)	66.87	(178,24)
25(	-.85,	-.31)	78.58	(177,24)	75.74	(143,24)	55.51	(115,24)	50.48	(202,24)	44.24	(179,24)
26(	-.89,	-.16)	81.95	(179,24)	80.89	(204,24)	63.44	(206,24)	59.15	(177,24)	40.62	(227,24)
27(	-.90,	.00)	89.50	(204,24)	75.53	(227,24)	71.57	(179,24)	70.03	(206,24)	22.99	(177,24)
28(	-.89,	.16)	66.96	(227,24)	49.51	(204,24)	36.52	(206,24)	36.32	(213,24)	28.94	(179,24)
29(	-.85,	.31)	41.74	(213,24)	28.52	(227,24)	21.38	(180,24)	11.80	(204,24)	11.47	(193,24)
30(	-.78,	.45)	30.59	(180,24)	24.25	(213,24)	20.20	(125,24)	18.28	(201,24)	14.77	(164,24)
31(	-.69,	.58)	75.62	(201,24)	74.69	(125,24)	66.00	(164,24)	58.99	(169,24)	38.43	(180,24)
32(	-.58,	.69)	106.09	(201,24)	104.19	(164,24)	102.29	(125,24)	89.72	(214,24)	43.69	(213,24)
33(	-.45,	.78)	101.53	(214,24)	80.00	(164,24)	72.51	(125,24)	68.76	(201,24)	36.04	(174,24)
34(	-.31,	.85)	55.39	(214,24)	51.04	(174,24)	47.47	(209,24)	37.71	(178,24)	37.45	(199,24)
35(	-.16,	.89)	134.93	(209,24)	123.38	(199,24)	56.15	(193,24)	46.05	(178,24)	32.29	(174,24)
36(	.00,	.90)	180.81	(209,24)	180.47	(199,24)	74.17	(193,24)	39.30	(139,24)	33.34	(164,24)
37(	.26,	1.48)	139.77	(164,24)	115.00	(139,24)	88.57	(199,24)	88.43	(209,24)	51.40	(193,24)
38(	.51,	1.41)	161.75	(164,24)	161.74	(139,24)	73.91	(209,24)	73.52	(197,24)	70.73	(207,24)
39(	.75,	1.30)	151.25	(197,24)	125.15	(139,24)	101.57	(126,24)	99.55	(112,24)	99.29	(209,24)
40(	.96,	1.15)	236.26	(197,24)	200.65	(145,24)	190.85	(161,24)	178.59	(317,24)	169.87	(61,24)
41(	1.15,	.96)	208.39	(65,24)	162.59	(145,24)	161.51	(160,24)	160.31	(197,24)	139.12	(174,24)
42(	1.30,	.75)	175.65	(174,24)	103.79	(210,24)	88.39	(198,24)	82.89	(247,24)	80.20	(159,24)
43(	1.41,	.51)	103.09	(247,24)	97.51	(134,24)	95.00	(198,24)	81.24	(156,24)	68.81	(139,24)

44(	1.48,	.26)	107.47	(219,24)	75.07	(156,24)	60.96	(160,24)	58.10	(247,24)	51.75	(198,24)
45(	1.50,	.00)	118.28	(219,24)	81.15	(136,24)	62.75	(156,24)	27.61	(215,24)	24.49	(222,24)
46(	1.48,	-.26)	76.63	(136,24)	71.80	(219,24)	41.95	(247,24)	38.04	(156,24)	28.77	(205,24)
47(	1.41,	-.51)	130.51	(162,24)	105.54	(287,24)	86.45	(155,24)	76.39	(176,24)	74.62	(205,24)
48(	1.30,	-.75)	192.40	(162,24)	166.30	(155,24)	120.55	(185,24)	106.16	(176,24)	101.94	(247,24)
49(	1.15,	-.96)	185.62	(203,24)	157.74	(185,24)	148.05	(187,24)	129.04	(155,24)	101.87	(136,24)
50(	.96,	-1.15)	243.55	(203,24)	156.57	(187,24)	153.62	(191,24)	130.96	(142,24)	130.73	(185,24)
51(	.75,	-1.30)	167.00	(142,24)	137.15	(203,24)	81.32	(150,24)	46.45	(185,24)	44.42	(138,24)
52(	.51,	-1.41)	108.22	(142,24)	76.31	(150,24)	57.41	(179,24)	52.95	(203,24)	41.32	(138,24)
53(	.26,	-1.48)	187.04	(150,24)	169.06	(179,24)	148.18	(135,24)	106.83	(138,24)	101.42	(205,24)
54(	.00,	-1.50)	138.39	(150,24)	108.56	(208,24)	96.11	(221,24)	78.77	(204,24)	73.19	(179,24)
55(	-.26,	-1.48)	74.53	(208,24)	41.80	(163,24)	38.76	(150,24)	38.20	(168,24)	29.61	(218,24)
56(	-.51,	-1.41)	117.01	(163,24)	92.95	(141,24)	66.69	(218,24)	56.33	(217,24)	55.84	(168,24)
57(	-.75,	-1.30)	182.90	(163,24)	152.07	(115,24)	126.78	(222,24)	123.34	(141,24)	115.10	(177,24)
58(	-.96,	-1.15)	190.54	(115,24)	142.44	(163,24)	136.68	(116,24)	134.59	(222,24)	109.33	(212,24)
59(	-1.15,	-.96)	147.02	(207,24)	111.15	(115,24)	91.10	(201,24)	84.50	(228,24)	82.72	(192,24)
60(	-1.30,	-.75)	151.14	(115,24)	108.82	(207,24)	99.80	(202,24)	91.09	(136,24)	90.24	(178,24)
61(	-1.41,	-.51)	111.59	(115,24)	98.19	(177,24)	91.48	(178,24)	78.83	(202,24)	75.80	(146,24)
62(	-1.48,	-.26)	115.42	(178,24)	95.62	(146,24)	87.05	(204,24)	86.53	(206,24)	63.01	(177,24)
63(	-1.50,	.00)	147.01	(178,24)	130.12	(204,24)	101.8[illegible]	(206,24)	59.03	(227,24)	48.84	(179,24)
64(	-1.48,	.26)	102.35	(204,24)	93.95	(213,24)	86.84	(178,24)	81.07	(124,24)	64.09	(206,24)
65(	-1.41,	.51)	113.87	(213,24)	98.06	(180,24)	65.96	(124,24)	38.76	(204,24)	38.45	(193,24)
66(	-1.30,	.75)	72.29	(180,24)	63.10	(213,24)	37.00	(124,24)	35.63	(229,24)	32.57	(181,24)
67(	-1.15,	.96)	82.78	(201,24)	78.55	(169,24)	48.27	(173,24)	47.70	(122,24)	44.79	(180,24)
68(	-.96,	1.15)	124.69	(201,24)	75.63	(169,24)	71.71	(164,24)	60.53	(125,24)	58.44	(213,24)
69(	-.75,	1.30)	87.50	(201,24)	75.93	(214,24)	62.30	(174,24)	58.16	(169,24)	56.77	(164,24)
70(	-.51,	1.41)	91.74	(174,24)	64.68	(125,24)	64.13	(178,24)	53.49	(214,24)	40.26	(169,24)
71(	-.26,	1.48)	84.18	(209,24)	80.28	(199,24)	80.14	(178,24)	62.23	(174,24)	60.12	(193,24)
72(	.00,	1.50)	119.78	(199,24)	115.77	(209,24)	81.10	(193,24)	54.70	(164,24)	49.46	(158,24)
73(	.35,	1.97)	121.60	(164,24)	113.98	(139,24)	64.6[illegible]	(209,24)	58.08	(199,24)	50.78	(172,24)
74(	.68,	1.88)	165.20	(164,24)	155.08	(139,24)	116.78	(197,24)	99.22	(125,24)	97.76	(209,24)
75(	1.00,	1.73)	184.47	(197,24)	163.61	(126,24)	147.20	(209,24)	136.87	(112,24)	115.18	(139,24)
76(	1.29,	1.53)	206.65	(197,24)	153.76	(126,24)	118.38	(185,24)	114.50	(161,24)	106.60	(137,24)
77(	1.53,	1.29)	180.41	(197,24)	167.24	(160,24)	160.39	(165,24)	154.46	(145,24)	151.96	(159,24)
78(	1.73,	1.00)	186.69	(174,24)	161.55	(210,24)	152.90	(159,24)	118.77	(187,24)	105.16	(160,24)
79(	1.88,	.68)	116.52	(156,24)	102.40	(247,24)	98.60	(174,24)	97.86	(198,24)	91.02	(200,24)
80(	1.97,	.35)	117.29	(156,24)	87.58	(160,24)	86.21	(219,24)	84.74	(215,24)	74.81	(269,24)
81(	2.00,	.00)	102.55	(156,24)	97.21	(219,24)	63.51	(215,24)	63.11	(136,24)	59.24	(230,24)
82(	1.97,	-.35)	102.00	(156,24)	91.12	(176,24)	82.24	(131,24)	78.55	(219,24)	74.68	(166,24)
83(	1.88,	-.68)	270.35	(162,24)	226.54	(120,24)	158.95	(100,24)	145.22	(176,24)	129.18	(155,24)
84(	1.73,	-1.00)	231.66	(162,24)	196.09	(155,24)	108.90	(185,24)	108.58	(247,24)	107.48	(176,24)
85(	1.53,	-1.29)	173.56	(203,24)	167.84	(187,24)	153.81	(155,24)	129.32	(185,24)	109.51	(221,24)
86(	1.29,	-1.53)	208.77	(203,24)	160.62	(191,24)	156.97	(187,24)	137.59	(138,24)	133.28	(244,24)
87(	1.00,	-1.73)	135.64	(142,24)	114.50	(203,24)	66.09	(278,24)	65.64	(138,24)	65.01	(150,24)
88(	.68,	-1.88)	86.20	(142,24)	85.57	(179,24)	80.04	(150,24)	68.35	(138,24)	65.68	(252,24)
89(	.35,	-1.97)	144.56	(150,24)	133.04	(179,24)	77.06	(205,24)	70.47	(244,24)	63.53	(138,24)
90(	.00,	-2.00)	139.62	(150,24)	97.58	(221,24)	92.82	(208,24)	90.33	(204,24)	68.76	(179,24)
91(	-.35,	-1.97)	120.06	(218,24)	118.17	(290,24)	95.09	(150,24)	85.37	(141,24)	82.82	(168,24)
92(	-.68,	-1.88)	194.94	(141,24)	146.97	(218,24)	139.76	(217,24)	117.84	(163,24)	93.83	(168,24)
93(	-1.00,	-1.73)	187.44	(163,24)	176.41	(115,24)	164.70	(141,24)	132.54	(222,24)	130.41	(177,24)
94(	-1.29,	-1.53)	277.45	(115,24)	200.97	(116,24)	172.84	(256,24)	159.62	(141,24)	147.46	(222,24)
95(	-1.53,	-1.29)	144.75	(192,24)	128.70	(115,24)	107.17	(207,24)	85.26	(163,24)	83.48	(219,24)
96(	-1.73,	-1.00)	143.76	(115,24)	136.87	(219,24)	94.85	(202,24)	93.25	(177,24)	92.03	(192,24)
97(	-1.88,	-.68)	116.01	(146,24)	106.71	(177,24)	97.77	(178,24)	96.75	(115,24)	78.0[illegible]	(20[illegible],24)
98(	-1.97,	-.35)	142.45	(146,24)	133.85	(178,24)	87.53	(206,24)	64.16	(204,24)	55.81	(17[illegible],24)
99(	-2.00,	.00)	183.00	(178,24)	107.08	(206,24)	105.87	(204,24)	64.51	(146,24)	64.50	(122,24)
100(	-1.97,	.35)	141.08	(124,24)	108.16	(178,24)	97.50	(180,24)	95.07	(213,24)	87.49	(204,24)

101(	-1.88,	.68)	138.32	(213,24)	137.88	(180,24)	116.14	(124,24)	60.74	(181,24)	53.28	(202,24)
102(	-1.73,	1.00)	113.65	(180,24)	89.21	(213,24)	69.81	(181,24)	63.56	(124,24)	54.46	(229,24)
103(	-1.53,	1.29)	120.73	(149,24)	88.56	(122,24)	81.84	(275,24)	77.45	(180,24)	74.84	(173,24)
104(	-1.29,	1.53)	118.33	(169,24)	103.99	(201,24)	93.18	(250,24)	81.80	(213,24)	72.59	(188,24)
105(	-1.00,	1.73)	89.47	(169,24)	82.50	(181,24)	76.95	(214,24)	69.04	(201,24)	62.53	(193,24)
106(	-.68,	1.88)	93.64	(125,24)	76.25	(174,24)	65.59	(277,24)	65.46	(169,24)	59.47	(214,24)
107(	-.35,	1.97)	89.95	(125,24)	64.50	(178,24)	58.26	(158,24)	52.14	(209,24)	51.15	(199,24)
108(	.00,	2.00)	86.78	(158,24)	79.40	(199,24)	75.48	(209,24)	63.94	(193,24)	48.28	(125,24)
109(	.66,	3.74)	97.38	(139,24)	88.67	(73,24)	78.77	(164,24)	66.45	(188,24)	63.25	(102,24)
110(	1.30,	3.57)	146.07	(197,24)	142.40	(317,24)	139.26	(164,24)	133.97	(127,24)	130.84	(125,24)
111(	1.90,	3.29)	304.00	(358,24)	297.41	(359,24)	291.04	(317,24)	233.35	(61,24)	232.73	(112,24)
112(	2.44,	2.91)	334.08	(2,24) *	322.70	(108,24)	287.53	(3,24)	286.74	(61,24)	249.49	(161,24)
113(	2.91,	2.44)	114.64	(197,24)	105.52	(159,24)	102.51	(160,24)	90.08	(264,24)	89.34	(87,24)
114(	3.29,	1.90)	140.91	(174,24)	140.84	(159,24)	133.93	(210,24)	114.78	(87,24)	99.36	(160,24)
115(	3.57,	1.30)	138.72	(140,24)	126.16	(156,24)	126.03	(248,24)	113.36	(216,24)	113.09	(210,24)
116(	3.74,	.66) *	417.84	(86,24)	217.64	(236,24)	199.19	(216,24)	185.14	(10,24)	180.03	(215,24)
117(	3.80,	.00)	405.52	(86,24)	221.59	(38,24)	195.56	(10,24)	191.34	(9,24)	174.14	(113,24)
118(	3.74,	-.66)	282.53	(99,24)	183.52	(326,24)	164.76	(131,24)	144.65	(38,24)	140.93	(77,24)
119(	3.57,	-1.30)	209.48	(99,24)	206.15	(20,24)	189.00	(32,24)	187.56	(162,24)	151.62	(280,24)
120(	3.29,	-1.90)	275.33	(70,24)	264.42	(90,24)	246.20	(98,24)	203.12	(162,24)	188.50	(293,24)
121(	2.91,	-2.44)	228.13	(90,24)	210.02	(353,24)	191.38	(221,24)	154.39	(81,24)	138.42	(187,24)
122(	2.44,	-2.91)	135.63	(28,24)	126.21	(278,24)	124.56	(284,24)	122.63	(203,24)	122.20	(106,24)
123(	1.90,	-3.29)	159.29	(278,24)	145.28	(47,24)	144.91	(106,24)	131.86	(291,24)	130.84	(335,24)
124(	1.30,	-3.57)	210.72	(135,24)	196.12	(335,24)	156.99	(47,24)	151.42	(249,24)	141.08	(186,24)
125(	.66,	-3.74)	186.61	(135,24)	164.89	(150,24)	158.95	(289,24)	155.70	(13,24)	144.46	(179,24)
126(	.00,	-3.80)	143.77	(150,24)	139.73	(221,24)	122.23	(186,24)	109.64	(42,24)	104.71	(204,24)
127(	-.66,	-3.74)	218.42	(290,24)	173.57	(255,24)	129.26	(218,24)	120.57	(150,24)	113.80	(168,24)
128(	-1.30,	-3.57)	163.90	(141,24)	143.37	(217,24)	140.76	(218,24)	112.08	(227,24)	107.65	(255,24)
129(	-1.90,	-3.29)	123.18	(141,24)	115.68	(163,24)	112.57	(115,24)	97.06	(227,24)	96.04	(168,24)
130(	-2.44,	-2.91)	158.53	(115,24)	142.58	(116,24)	131.15	(256,24)	127.58	(141,24)	96.95	(212,24)
131(	-2.91,	-2.44)	142.97	(192,24)	115.16	(115,24)	111.99	(116,24)	73.97	(163,24)	71.44	(219,24)
132(	-3.29,	-1.90)	155.50	(219,24)	129.18	(192,24)	117.86	(116,24)	109.11	(115,24)	104.61	(212,24)
133(	-3.57,	-1.30)	117.30	(228,24)	116.54	(146,24)	91.47	(153,24)	91.17	(177,24)	79.62	(288,24)
134(	-3.74,	-.66)	132.32	(146,24)	102.75	(178,24)	84.58	(206,24)	64.87	(228,24)	52.64	(304,24)
135(	-3.80,	.00)	165.01	(178,24)	97.21	(206,24)	86.18	(289,24)	71.51	(122,24)	71.20	(229,24)
136(	-3.74,	.66)	197.13	(124,24)	132.01	(180,24)	96.18	(178,24)	88.77	(213,24)	80.16	(206,24)
137(	-3.57,	1.30)	178.01	(213,24)	177.05	(124,24)	159.29	(180,24)	93.96	(181,24)	61.93	(251,24)
138(	-3.29,	1.90)	138.47	(180,24)	126.33	(181,24)	124.94	(213,24)	103.63	(250,24)	88.55	(124,24)
139(	-2.91,	2.44)	131.16	(122,24)	115.89	(169,24)	98.36	(275,24)	88.19	(180,24)	86.09	(250,24)
140(	-2.44,	2.91)	115.72	(250,24)	108.51	(169,24)	99.99	(193,24)	89.30	(201,24)	82.31	(122,24)
141(	-1.90,	3.29)	109.83	(214,24)	98.20	(181,24)	91.16	(92,24)	85.30	(332,24)	80.70	(193,24)
142(	-1.30,	3.57)	106.70	(125,24)	68.76	(332,24)	64.23	(277,24)	63.53	(214,24)	62.36	(92,24)
143(	-.66,	3.74)	101.67	(125,24)	68.16	(158,24)	60.92	(200,24)	56.38	(43,24)	49.12	(178,24)
144(	.00,	3.80)	91.58	(158,24)	70.82	(143,24)	60.78	(125,24)	59.73	(102,24)	53.68	(169,24)
145(	1.08,	6.11)	74.05	(73,24)	59.87	(183,24)	59.79	(139,24)	57.98	(188,24)	56.57	(306,24)
146(	2.12,	5.83)	79.97	(168,24)	77.76	(125,24)	76.98	(127,24)	75.13	(197,24)	69.65	(139,24)
147(	3.10,	5.37)	97.33	(139,24)	96.65	(126,24)	90.41	(112,24)	77.05	(358,24)	75.01	(359,24)
148(	3.99,	4.75)	124.92	(2,24)	115.73	(108,24)	103.62	(3,24)	103.41	(126,24)	103.08	(61,24)
149(	4.75,	3.99)	83.18	(264,24)	82.08	(197,24)	81.40	(108,24)	79.01	(145,24)	78.51	(144,24)
150(	5.37,	3.10)	109.12	(25,24)	106.26	(159,24)	94.40	(174,24)	90.54	(210,24)	89.22	(171,24)
151(	5.83,	2.12)	230.23	(140,24)	217.83	(25,24)	199.45	(39,24)	183.65	(130,24)	173.15	(248,24)
152(	6.11,	1.08)	299.30	(86,24)	171.26	(10,24)	154.21	(236,24)	145.74	(65,24)	142.88	(355,24)
153(	6.20,	.00)	291.67	(86,24)	197.28	(38,24)	167.73	(9,24)	166.30	(10,24)	145.72	(26,24)
154(	6.11,	-1.08)	224.10	(99,24)	205.79	(326,24)	122.57	(131,24)	120.86	(38,24)	100.51	(81,24)
155(	5.83,	-2.12)	175.62	(99,24)	151.23	(32,24)	142.69	(20,24)	131.22	(54,24)	126.26	(283,24)
156(	5.37,	-3.10)	236.44	(70,24)	229.45	(90,24)	208.24	(98,24)	187.62	(293,24)	171.71	(51,24)
157(	4.75,	-3.99)	187.77	(90,24)	177.48	(353,24)	149.90	(221,24)	149.65	(81,24)	122.72	(293,24)

158(	3.99,	-4.75)	130.00	(278,24)	124.53	(28,24)	107.42	(335,24)	103.50	(106,24)	100.82	(244,24)
159(	3.10,	-5.37)	126.52	(278,24)	126.28	(47,24)	118.15	(135,24)	106.98	(335,24)	106.27	(291,24)
160(	2.12,	-5.83)	180.65	(335,24)	163.26	(135,24)	147.22	(186,24)	138.82	(249,24)	126.17	(340,24)
161(	1.08,	-6.11)	182.74	(340,24)	161.66	(249,24)	146.86	(135,24)	123.44	(13,24)	105.57	(150,24)
162(	.00,	-6.20)	112.14	(82,24)	106.94	(186,24)	101.96	(211,24)	93.38	(13,24)	87.08	(290,24)
163(	-1.08,	-6.11)	163.28	(290,24)	134.31	(255,24)	109.49	(150,24)	96.02	(168,24)	93.71	(362,24)
164(	-2.12,	-5.83)	193.87	(217,24)	173.99	(255,24)	160.45	(141,24)	137.11	(218,24)	125.27	(257,24)
165(	-3.10,	-5.37)	131.93	(163,24)	117.88	(141,24)	101.77	(255,24)	99.68	(153,24)	86.64	(256,24)
166(	-3.99,	-4.75)	107.28	(115,24)	98.33	(256,24)	93.29	(116,24)	92.45	(141,24)	69.32	(12,24)
167(	-4.75,	-3.99)	112.81	(115,24)	94.17	(192,24)	93.50	(116,24)	60.88	(177,24)	52.23	(257,24)
168(	-5.37,	-3.10)	106.77	(219,24)	106.16	(192,24)	102.93	(116,24)	84.61	(212,24)	81.12	(207,24)
169(	-5.83,	-2.12)	97.09	(228,24)	96.10	(116,24)	78.14	(153,24)	77.20	(79,24)	76.45	(305,24)
170(	-6.11,	-1.08)	191.70	(79,24)	159.98	(123,24)	122.54	(36,24)	116.23	(95,24)	115.52	(239,24)
171(	-6.20,	.00)	114.75	(178,24)	77.19	(289,24)	71.15	(229,24)	67.63	(123,24)	58.26	(151,24)
172(	-6.11,	1.08)	141.94	(124,24)	95.36	(180,24)	66.72	(178,24)	64.97	(79,24)	61.60	(213,24)
173(	-5.83,	2.12)	136.74	(124,24)	133.73	(213,24)	110.01	(180,24)	74.79	(181,24)	64.59	(246,24)
174(	-5.37,	3.10)	118.72	(181,24)	96.56	(180,24)	91.95	(213,24)	86.18	(250,24)	85.76	(132,24)
175(	-4.75,	3.99)	108.63	(122,24)	86.45	(117,24)	82.43	(169,24)	82.22	(132,24)	69.22	(275,24)
176(	-3.99,	4.75)	136.73	(73,24)	127.64	(250,24)	126.60	(103,24)	123.92	(319,24)	121.48	(169,24)
177(	-3.10,	5.37)	141.39	(332,24)	127.07	(103,24)	123.33	(214,24)	121.24	(92,24)	98.41	(118,24)
178(	-2.12,	5.83)	99.43	(332,24)	90.21	(125,24)	78.03	(19,24)	66.80	(92,24)	65.53	(103,24)
179(	-1.08,	6.11)	76.19	(119,24)	74.03	(43,24)	65.69	(104,24)	64.87	(66,24)	62.15	(125,24)
180(	.00,	6.20)	69.94	(143,24)	52.56	(119,24)	51.78	(247,24)	51.11	(158,24)	45.84	(102,24)

```
M21ADO*GUIDE(1).EXAMPLE4
EXAMPLE FOUR - APPLICATION FOR 30 SOURCES AND 50 RECEPTORS
POLLUTANT TSP IS BEING MODELED USING 3 HRS OF MET DATA
DATA INPUT BY TOM PIERCE      20 FEBRUARY 1980
79,292,12,1,3,4,10,0,1.,1.,0.
0,0,0,1,1,0,1,1,0,0,0,0,0,0,1,1,0,0,1,0,0,0,0,0
10.,.07,.07,.1,.15,.35,.55,0.,0.,0.,0.,0.,0.
1        0.5     0.7     600.    200.    430.    5.8     21.0
2        0.4     1.85    225.    150.    425.    5.2     19.
3        0.5     1.8     250.    150.    425.    5.2     19.
4        1.75    .85     70.     80.     430.    3.6     16.
5        1.75    .75     70.     80.     430.    3.6     16.
6        1.75    .65     70.     80.     430.    3.6     16.
7        2.4     1.5     100.    120.    415.    5.      23.
8        2.5     1.6     120.    120.    415.    5.      23.
9        2.5     1.5     100.    120.    415.    5.      23.
10       1.8     1.85    85.     90.     420.    4.6     17.
11       1.95    1.9     85.     90.     420.    4.6     17.
12       2.1     1.85    85.     90.     420.    4.6     17.
13       2.      1.75    60.     50.     440.    3.      15.
14       1.9     1.75    60.     50.     440.    3.      15.
15       2.35    1.1     5.      30.     450.    2.3     12.
16       2.4     1.1     5.      30.     450.    2.3     12.
17       2.45    1.1     5.      30.     450.    2.3     12.
18       2.5     1.1     5.      30.     450.    2.3     12.
19       2.35    1.      5.      30.     450.    2.3     12.
20       2.4     1.      5.      30.     450.    2.3     12.
21       2.45    1.      5.      30.     450.    2.3     12.
22       2.5     1.      5.      30.     450.    2.3     12.
23       .85     1.05    80.     120.    420.    4.8     18.
24       .9      1.05    80.     120.    420.    4.8     18.
25       .95     1.05    80.     120.    420.    4.8     18.
26       1.      1.05    80.     120.    420.    4.8     18.
27       .7      2.65    60.     100.    460.    4.      20.
28       .7      2.6     60.     100.    460.    4.      20.
29       .7      2.55    60.     100.    460.    4.      20.
30       .7      2.5     60.     100.    460.    4.      20.
ENDP
002008027
1.,0.,0.,0.,0.,2.,1.
1        1.00    2.5
2        1.25    2.4
3        1.      2.25
4        1.25    2.25
5        1.2     2.
6        1.5     2.
7        .75     1.7
8        1.      1.6
9        .75     1.5
10       1.      1.5
```

```
50      11      .95       1.25
51      12      1.25      1.25
52      13      2.        1.
53      14      2.25      1.25
54      15      3.        1.75
55      16      3.        1.5
56      17      3.25      1.5
57      18      3.5       1.5
58      19      3.5       1.25
59      20      3.        1.
60      21      3.5       1.
61      22      2.5       .75
62      23      2.75      .75
63      24      3.        .75
64      25      3.25      .75
65      26      1.25      .5
66      27      1.5       .5
67      28      1.75      .5
68      29      2.        .5
69      30      2.25      .5
70      31      2.5       .5
71      32      3.        .5
72      33      3.5       .5
73      34      .75       .25
74      35      2.25      .25
75      36      2.75      .25
76      37      .5        0.
77      38      .75       0.
78      39      1.        0.
79      40      1.25      0.
80      41      1.5       0.
81      42      1.75      0.
82      43      2.        0.
83      44      2.25      0.
84      45      2.5       0.
85      46      2.75      0.
86      47      3.        0.
87      48      3.25      0.
88      49      3.5       0.
89      50      3.5       -0.05
90      ENDREC
91      79 292 12 2 2.7 298. 290. 1800.
92      79 292 13 2 2.9 299. 320. 1850.
93      79 292 14 2 3. 299. 305. 1900.
```

```
                                    MPTER - VERSION 79365
EXAMPLE FOUR - APPLICATION FOR 30 SOURCES AND 50 RECEPTORS
POLLUTANT TSP IS BEING MODELED USING 3 HRS OF MET DATA
DATA INPUT BY TOM PIERCE        20 FEBRUARY 1980

                              GENERAL INPUT INFORMATION

 THIS RUN OF MPTER-VERSION 79365 IS FOR THE POLLUTANT PART FOR    1    3-HOUR PERIODS.
 CONCENTRATION ESTIMATES BEGIN ON HOUR-12, JULIAN DAY-292, YEAR-1979.
 A FACTOR OF        1.0000000 HAS BEEN SPECIFIED TO CONVERT USER LENGTH UNITS TO KILOMETERS.
 10 SIGNIFICANT SOURCES ARE TO BE CONSIDERED.
THIS RUN WILL NOT CONSIDER ANY POLLUTANT LOSS.

 OPTION        OPTION LIST                    OPTION SPECIFICATION : 0= IGNORE OPTION
                                                                     1= USE OPTION
                          TECHNICAL OPTIONS
     1         TERRAIN ADJUSTMENTS                                   0
     2         DO NOT INCLUDE STACK DOWNWASH CALCULATIONS            0
     3         DO NOT INCLUDE GRADUAL PLUME RISE CALCULATIONS        0
     4         CALCULATE INITIAL PLUME SIZE                          1
                          INPUT OPTIONS
     5         READ MET DATA FROM CARDS                              1
     6         READ HOURLY EMISSIONS                                 0
     7         SPECIFY SIGNIFICANT SOURCES                           1
     8         READ RADIAL DISTANCES TO GENERATE RECEPTORS           1
                          PRINTED OUTPUT OPTIONS
     9         DELETE EMISSIONS WITH HEIGHT TABLE                    0
    10         DELETE MET DATA SUMMARY FOR AVG PERIOD                0
    11         DELETE HOURLY CONTRIBUTIONS                           0
    12         DELETE MET DATA ON HOURLY CONTRIBUTIONS               0
    13         DELETE FINAL PLUME RISE CALC ON HRLY CONTRIBUTIONS    0
    14         DELETE HOURLY SUMMARY                                 0
    15         DELETE MET DATA ON HRLY SUMMARY                       1
    16         DELETE FINAL PLUME RISE CALC ON HRLY SUMMARY          1
    17         DELETE AVG-PERIOD CONTRIBUTIONS                       0
    18         DELETE AVERAGING PERIOD SUMMARY                       0
    19         DELETE AVG CONCENTRATIONS AND HI-5 TABLES             1
                          OTHER CONTROL AND OUTPUT OPTIONS
    20         RUN IS PART OF A SEGMENTED RUN                        0
    21         WRITE PARTIAL CONC TO DISK OR TAPE                    0
    22         WRITE HOURLY CONC TO DISK OR TAPE                     0
    23         WRITE AVG-PERIOD CONC TO DISK OR TAPE                 0
    24         PUNCH AVG-PERIOD CONC ONTO CARDS                      0

 ANEMOMETER HEIGHT=        10.00
 WIND PROFILE WITH HEIGHT EXPONENTS CORRESPONDING TO STABILITY ARE AS FOLLOWS:
      FOR STABILITY A:  .07
          STABILITY B:  .07
          STABILITY C:  .10
          STABILITY D:  .15
          STABILITY E:  .35
          STABILITY F:  .55
```

POINT SOURCE INFORMATION

SOURCE	EAST COORD (USER UNITS)	NORTH COORD (USER UNITS)	SO2(G/SEC) EMISSIONS	PART(G/SEC) EMISSIONS	STACK HT(M)	STACK TEMP(K)	STACK DIAM(M)	STACK VEL(M/SEC)	POTEN. IMPACT (MICRO G/M**3)	EFF HT(M)	GRD-LVL ELEV USER HT UNITS	PUOY FLUX F M**4/S**3
1 1	.50	.70	.00	600.00	200.0	430.0	5.8	21.0	76.67	769.85	.00	551.78
2 2	.40	1.85	.00	225.00	150.0	425.0	5.2	19.0	43.26	613.59	.00	391.19
3 3	.50	1.80	.00	250.00	150.0	425.0	5.2	19.0	48.07	613.59	.00	391.19
4 4	1.75	.85	.00	70.00	80.0	430.0	3.6	16.0	36.48	353.12	.00	161.96
5 5	1.75	.75	.00	70.00	80.0	430.0	3.6	16.0	36.48	353.12	.00	161.96
6 6	1.75	.65	.00	70.00	80.0	430.0	3.6	16.0	36.48	353.12	.00	161.96
7 7	2.40	1.50	.00	100.00	120.0	415.0	5.0	23.0	20.03	599.90	.00	414.40
8 8	2.50	1.60	.00	120.00	120.0	415.0	5.0	23.0	24.03	599.90	.00	414.40
9 9	2.50	1.50	.00	100.00	120.0	415.0	5.0	23.0	20.03	599.90	.00	414.40
10 10	1.80	1.85	.00	85.00	90.0	420.0	4.6	17.0	27.65	458.36	.00	266.66
11 11	1.95	1.90	.00	85.00	90.0	420.0	4.6	17.0	27.65	458.36	.00	266.66
12 12	2.10	1.85	.00	85.00	90.0	420.0	4.6	17.0	27.65	458.36	.00	266.66
13 13	2.00	1.75	.00	60.00	50.0	440.0	3.0	15.0	51.77	267.21	.00	110.57
14 14	1.90	1.75	.00	60.00	50.0	440.0	3.0	15.0	51.77	267.21	.00	110.57
15 15	2.35	1.10	.00	5.00	30.0	450.0	2.3	12.0	9.51	172.85	.00	54.30
16 16	2.40	1.10	.00	5.00	30.0	450.0	2.3	12.0	9.51	172.85	.00	54.30
17 17	2.45	1.10	.00	5.00	30.0	450.0	2.3	12.0	9.51	172.85	.00	54.30
18 18	2.50	1.10	.00	5.00	30.0	450.0	2.3	12.0	9.51	172.85	.00	54.30
19 19	2.35	1.00	.00	5.00	30.0	450.0	2.3	12.0	9.51	172.85	.00	54.30
20 20	2.40	1.00	.00	5.00	30.0	450.0	2.3	12.0	9.51	172.85	.00	54.30
21 21	2.45	1.00	.00	5.00	30.0	450.0	2.3	12.0	9.51	172.85	.00	54.30
22 22	2.50	1.00	.00	5.00	30.0	450.0	2.3	12.0	9.51	172.85	.00	54.30
23 23	.85	1.05	.00	80.00	120.0	420.0	4.8	18.0	20.64	521.19	.00	307.43
24 24	.90	1.05	.00	80.00	120.0	420.0	4.8	18.0	20.64	521.19	.00	307.43
25 25	.95	1.05	.00	80.00	120.0	420.0	4.8	18.0	20.64	521.19	.00	307.43
26 26	1.00	1.05	.00	80.00	120.0	420.0	4.8	18.0	20.64	521.19	.00	307.43
27 27	.70	2.65	.00	60.00	100.0	460.0	4.0	20.0	17.74	483.20	.00	284.80
28 28	.70	2.60	.00	60.00	100.0	460.0	4.0	20.0	17.74	483.20	.00	284.80
29 29	.70	2.55	.00	60.00	100.0	460.0	4.0	20.0	17.74	483.20	.00	284.80
30 30	.70	2.50	.00	60.00	100.0	460.0	4.0	20.0	17.74	483.20	.00	284.80

SIGNIFICANT PART POINT SOURCES

RANK	CHI-MAX (MICROGRAMS/M**3)	SOURCE NO.
1	76.67	1
2	51.77	13
3	51.77	14
4	48.07	3
5	43.26	2
6	36.48	4
7	36.48	5
8	36.48	6
9	27.65	10
10	27.65	11

HEIGHT ABOVE 100M FOR POINT SOURCE 1 HEIGHT=200.00 (METERS) EMISSIONS= 600.00 (G/SEC)
HEIGHT ABOVE 100M FOR POINT SOURCE 2 HEIGHT=150.00 (METERS) EMISSIONS= 225.00 (G/SEC)
HEIGHT ABOVE 100M FOR POINT SOURCE 3 HEIGHT=150.00 (METERS) EMISSIONS= 250.00 (G/SEC)
HEIGHT ABOVE 100M FOR POINT SOURCE 7 HEIGHT=120.00 (METERS) EMISSIONS= 100.00 (G/SEC)

```
HEIGHT ABOVE 100M FOR POINT SOURCE  8    HEIGHT=120.00 (METERS)   EMISSIONS=   120.00 (G/SEC)
HEIGHT ABOVE 100M FOR POINT SOURCE  9    HEIGHT=120.00 (METERS)   EMISSIONS=   100.00 (G/SEC)
HEIGHT ABOVE 100M FOR POINT SOURCE 23    HEIGHT=120.00 (METERS)   EMISSIONS=    80.00 (G/SEC)
HEIGHT ABOVE 100M FOR POINT SOURCE 24    HEIGHT=120.00 (METERS)   EMISSIONS=    80.00 (G/SEC)
HEIGHT ABOVE 100M FOR POINT SOURCE 25    HEIGHT=120.00 (METERS)   EMISSIONS=    80.00 (G/SEC)
HEIGHT ABOVE 100M FOR POINT SOURCE 26    HEIGHT=120.00 (METERS)   EMISSIONS=    80.00 (G/SEC)

     TOTAL PART EMISSION AND CUMULATIVE FRACTION ACCORDING TO HEIGHT

              TOTAL POINT   CUMULATIVE
HEIGHT(M) EMISSIONS(G/S)   FRACTION

  0 -  5          .00          .000
  6 - 10          .00          .000
 11 - 15          .00          .000
 16 - 20          .00          .000
 21 - 25          .00          .000
 26 - 30        40.00          .016
 31 - 35          .00          .016
 36 - 40          .00          .016
 41 - 45          .00          .016
 46 - 50       120.00          .062
 51 - 55          .00          .062
 56 - 60          .00          .062
 61 - 65          .00          .062
 66 - 70          .00          .062
 71 - 75          .00          .062
 76 - 80       210.00          .143
 81 - 85          .00          .143
 86 - 90       255.00          .242
 91 - 95          .00          .242
 96 -100       240.00          .335

TOTAL         2580.00

                    ADDITIONAL INFORMATION ON SOURCES.

 USER SPECIFIED   2 (NPT) SIGNIFICANT POINT SOURCES AS LISTED BY POINT SOURCE NUMBER:
    8   27

 EMISSION INFORMATION FOR   30 (NPT) POINT SOURCES HAS BEEN INPUT
 10 SIGNIFICANT POINT SOURCES(NSIGP) ARE TO BE USED FOR THIS RUN
 THE ORDER OF SIGNIFICANCE(IMPS) FOR 25 OR LESS POINT SOURCES USED IN THIS RUN AS LISTED BY POINT SOURCE NUMBER:
    8   27    1   17   14    3    2    4    5    6

                    RECEPTOR INFORMATION

 MPTER INTERNALLY GENERATES 36 RECEPTORS ON A CIRCLE CORRESPONDING TO EACH NON-ZERO RADIAL DISTANCE FROM A CENTER POINT
        COORDINATES ARE (USER UNITS): (   2.000,   1.000)
        RADIAL DISTANCE(S) USER SPECIFIED (USER UNITS):      1.000      .000      .000      .000      .000

 RECEPTOR    IDENTIFICATION  EAST      NORTH     RECEPTOR HT     RECEPTOR GROUND LEVEL
                             COORD     COORD  ABV LOCAL GRD LVL     ELEVATION
                             (USER UNITS)        (METERS)        (USER HT UNITS)

   1            10, 1.0       2.174     1.995       .0                .0
   2            20, 1.0       2.342     1.940       .0                .0
```

3	30, 1.0	2.500	1.866	.0	.0
4	40, 1.0	2.683	1.766	.0	.0
5	50, 1.0	2.766	1.683	.0	.0
6	60, 1.0	2.866	1.500	.0	.0
7	70, 1.0	2.940	1.342	.0	.0
8	80, 1.0	2.985	1.174	.0	.0
9	90, 1.0	3.000	1.000	.0	.0
10	100, 1.0	2.985	.826	.0	.0
11	110, 1.0	2.940	.658	.0	.0
12	120, 1.0	2.866	.500	.0	.0
13	130, 1.0	2.766	.357	.0	.0
14	140, 1.0	2.683	.234	.0	.0
15	150, 1.0	2.500	.134	.0	.0
16	160, 1.0	2.342	.060	.0	.0
17	170, 1.0	2.174	.015	.0	.0
18	180, 1.0	2.000	.000	.0	.0
19	190, 1.0	1.826	.015	.0	.0
20	200, 1.0	1.658	.060	.0	.0
21	210, 1.0	1.500	.134	.0	.0
22	220, 1.0	1.357	.234	.0	.0
23	230, 1.0	1.234	.357	.0	.0
24	240, 1.0	1.134	.500	.0	.0
25	250, 1.0	1.060	.658	.0	.0
26	260, 1.0	1.015	.826	.0	.0
27	270, 1.0	1.000	1.000	.0	.0
28	280, 1.0	1.015	1.174	.0	.0
29	290, 1.0	1.060	1.342	.0	.0
30	300, 1.0	1.134	1.500	.0	.0
31	310, 1.0	1.234	1.683	.0	.0
32	320, 1.0	1.357	1.766	.0	.0
33	330, 1.0	1.500	1.866	.0	.0
34	340, 1.0	1.658	1.940	.0	.0
35	350, 1.0	1.826	1.985	.0	.0
36	360, 1.0	2.000	2.000	.0	.0
37	1	1.000	2.500	.0	.0
38	2	1.250	2.400	.0	.0
39	3	1.000	2.250	.0	.0
40	4	1.250	2.250	.0	.0
41	5	1.200	2.000	.0	.0
42	6	1.500	2.000	.0	.0
43	7	.750	1.700	.0	.0
44	8	1.000	1.600	.0	.0
45	9	.750	1.500	.0	.0
46	10	1.000	1.500	.0	.0
47	11	.950	1.250	.0	.0
48	12	1.250	1.250	.0	.0
49	13	2.000	1.000	.0	.0
50	14	2.250	1.250	.0	.0
51	15	3.000	1.750	.0	.0
52	16	3.000	1.500	.0	.0
53	17	3.250	1.500	.0	.0
54	18	3.500	1.500	.0	.0
55	19	3.500	1.250	.0	.0
56	20	3.000	1.000	.0	.0
57	21	3.500	1.000	.0	.0
58	22	2.500	.750	.0	.0
59	23	2.750	.750	.0	.0

60	24	3.000	.750	.0	.0
61	25	3.250	.750	.0	.0
62	26	1.250	.500	.0	.0
63	27	1.500	.500	.0	.0
64	28	1.750	.500	.0	.0
65	29	2.000	.500	.0	.0
66	30	2.250	.500	.0	.0
67	31	2.500	.500	.0	.0
68	32	2.000	.500	.0	.0
69	33	3.500	.500	.0	.0
70	34	.750	.250	.0	.0
71	35	2.250	.250	.0	.0
72	36	2.750	.250	.0	.0
73	37	.500	.000	.0	.0
74	38	.750	.000	.0	.0
75	39	1.000	.000	.0	.0
76	40	1.250	.000	.0	.0
77	41	1.500	.000	.0	.0
78	42	1.750	.000	.0	.0
79	43	2.000	.000	.0	.0
80	44	2.250	.000	.0	.0
81	45	2.500	.000	.0	.0
82	46	2.750	.000	.0	.0
83	47	3.000	.000	.0	.0
84	48	3.250	.000	.0	.0
85	49	3.500	.000	.0	.0
86	50	3.500	-.050	.0	.0

INPUT MET DATA 79 / 292

HOUR	THETA (DEG)	SPEED (M/S)	MIXING HEIGHT(M)	TEMP (DEG-K)	STABILITY CLASS
12	290.00	2.70	1800.00	298.00	2
13	320.00	2.90	1850.00	299.00	2
14	305.00	3.00	1930.00	299.00	2

RESULTANT MET CONDITIONS

WIND DIRECTION= 305.35 RESULTANT WIND SPEED= 2.80
AVERAGE WIND SPEED= 2.87 AVERAGE TEMP= 298.67
WIND PERSISTENCE= .978 MODAL STABILITY= 2

EXAMPLE FOUR - APPLICATION FOR 30 SOURCES AND 50 RECEPTORS
POLLUTANT TSP IS BEING MODELED USING 3 HRS OF MET DATA
DATA INPUT BY TOM PIERCE 20 FEBRUARY 1980

PART CONTRIBUTION(MICROGRAMS/M**3) FROM SIGNIFICANT POINT SOURCES 79/ 292 : HOUR 12

HOUR	THETA (DEG)	SPEED (M/S)	MIXING HEIGHT(M)	TEMP (K)	STABILITY CLASS
12	290.00	2.70	1800.00	298.00	2

	1	2	3	4	5	6	7	8	9	10
FINAL HT (M)	702.06	565.39	564.39	336.57	334.57	336.57	556.98	556.98	556.98	432.59
FINAL HT (M)	432.59	432.59	261.20	261.20	173.45	173.45	173.45	173.45	173.45	173.45
FINAL HT (M)	173.45	173.45	485.68	485.68	885.48	485.68	455.85	455.85	455.85	455.85
DIST FIN HT (KM)	1.465	1.276	1.276	.897	.897	.897	1.304	1.304	1.304	1.094
DIST FIN HT (KM)	1.094	1.094	.771	.771	.583	.583	.583	.583	.583	.583
DIST FIN HT (KM)	.583	.583	1.158	1.158	1.158	1.158	1.127	1.127	1.127	1.127

RANK	1	2	3	4	5	6	7	8	9	10	TOTAL SIGNIF POINT	TOTAL ALL POINT SOURCES
SOURCE #	8	27	1	13	14	3	2	4	5	6		
RECEP #												
1	.000	9.589	.000	.000	.000	.188	.307	.000	.000	.000	10.041	40.047
2	.000	12.324	.000	.000	.000	.354	.627	.000	.000	.000	13.306	51.273
3	.000	14.124	.000	.023	.061	.093	1.428	.000	.000	.000	16.565	61.540
4	.000	14.703	.000	1.290	1.474	2.432	3.260	.000	.000	.000	23.158	75.080
5	.000	13.837	.000	8.143	9.442	5.968	7.051	.000	.000	.000	44.341	102.125
6	.038	11.589	.000	24.718	28.572	12.508	13.758	.000	.000	.000	91.175	148.612
7	.134	8.463	.002	33.505	41.283	22.832	23.430	.000	.000	.000	129.651	179.012
8	.076	5.267	.023	22.285	31.691	34.970	34.105	.003	.000	.000	128.378	163.468
9	.011	2.728	.175	7.510	13.323	44.329	41.773	.144	.021	.002	110.034	146.129
10	.000	1.187	.898	1.234	2.969	46.048	42.582	2.202	.555	.095	97.733	157.996
11	.000	.381	3.205	.098	.319	38.891	35.823	10.150	4.442	1.392	94.692	147.434
12	.000	.098	8.234	.002	.014	26.520	24.705	18.726	13.197	6.917	98.413	159.732
13	.000	.019	15.660	.000	14.509	13.891	14.387	15.817	13.273	87.556	152.839	
14	.000	.003	22.594	.000	.000	6.338	6.348	4.201	7.404	9.925	56.897	107.509
15	.000	.000	25.268	.000	.000	2.109	2.353	.406	1.152	2.669	34.047	42.430
16	.000	.000	22.355	.000	.000	.607	.712	.009	.048	.221	23.951	35.459
17	.000	.000	15.999	.000	.000	.135	.178	.000	.000	.002	16.313	19.697
18	.000	.000	9.527	.000	.000	.025	.038	.000	.000	.000	9.589	10.322
19	.000	.000	4.905	.000	.000	.004	.007	.000	.000	.000	4.916	5.039
20	.000	.000	2.959	.000	.000	.001	.001	.000	.000	.000	2.961	2.978
21	.000	.000	1.731	.000	.000	.000	.000	.000	.000	.000	1.731	1.734
22	.000	.000	.955	.000	.000	.000	.000	.000	.000	.000	.955	.956
23	.000	.000	.454	.000	.000	.000	.000	.000	.000	.000	.454	.454
24	.000	.000	.135	.000	.000	.000	.000	.000	.000	.000	.135	.135
25	.000	.000	.010	.000	.000	.000	.000	.000	.000	.000	.010	.010
26	.000	.000	.000	.000	.000	.000	.000	.000	.000	.000	.000	.000
27	.000	.000	.000	.000	.000	.000	.000	.000	.000	.000	.002	.002
28	.000	.000	.000	.000	.000	.007	.028	.000	.000	.000	.035	.035
29	.000	.000	.000	.000	.000	.124	.282	.000	.000	.000	.406	.406
30	.000	.000	.000	.000	.000	.598	1.050	.000	.000	.000	1.648	1.648
31	.000	.000	.000	.000	.000	.702	1.273	.000	.000	.000	1.974	1.975

32	.000	.004	.000	.000	.000	.339	.725	.000	.000	.000	1.068	1.127
33	.000	.119	.000	.000	.000	.135	.330	.000	.000	.000	.594	1.587
34	.000	.860	.000	.000	.000	.771	.170	.000	.000	.000	1.110	5.679
35	.000	3.022	.000	.000	.000	.058	.181	.000	.000	.000	3.221	15.050
36	.000	6.265	.000	.000	.000	.078	.179	.000	.000	.000	6.520	27.570
37	.000	.034	.000	.000	.000	.000	.000	.000	.000	.000	.034	.077
38	.000	.666	.000	.000	.000	.000	.000	.000	.000	.000	.666	2.200
39	.000	.001	.000	.000	.000	.000	.000	.000	.000	.000	.001	.029
40	.000	.719	.000	.000	.000	.000	.000	.000	.000	.000	.719	2.036
41	.000	.005	.000	.000	.000	.000	.004	.000	.000	.000	.012	.098
42	.000	.427	.000	.000	.000	.010	.043	.000	.000	.000	.490	3.226
43	.000	.000	.000	.000	.000	.000	.007	.000	.000	.000	.007	.007
44	.000	.000	.000	.000	.000	.141	.399	.000	.000	.000	.540	.540
45	.000	.000	.000	.000	.000	.000	.003	.000	.000	.000	.003	.003
46	.000	.000	.000	.000	.000	.137	.354	.000	.000	.000	.491	.491
47	.000	.000	.000	.000	.000	.004	.020	.000	.000	.000	.025	.025
48	.000	.000	.000	.000	.000	.588	.886	.000	.000	.000	1.474	1.474
49	.000	.005	.015	.000	.000	11.987	13.220	.000	.000	.000	25.230	37.460
50	.000	.442	.001	.000	.009	22.180	23.828	.000	.000	.000	46.460	49.305
51	.000	18.238	.000	2.840	3.147	2.928	3.639	.000	.000	.000	30.771	91.931
52	.154	13.552	.000	29.461	30.892	12.203	13.365	.000	.000	.000	99.529	187.532
53	.551	16.232	.000	30.753	28.810	11.273	12.048	.000	.000	.000	99.258	194.902
54	.000	17.465	.001	25.627	23.297	10.104	10.663	.000	.000	.000	88.057	193.847
55	2.740	12.815	.027	53.201	51.391	24.656	24.134	.006	.031	.000	168.957	274.587
56	.011	2.728	.175	7.510	13.323	44.329	41.777	.164	.021	.002	110.034	146.129
57	1.821	7.288	.287	40.213	44.437	41.559	38.697	.354	.082	.015	174.743	264.382
58	.000	.056	1.041	.000	.000	24.770	24.084	2.714	.731	.081	53.449	77.750
59	.000	.265	1.397	.013	.083	36.009	33.886	3.669	1.072	.194	76.676	109.350
60	.000	.817	1.600	.600	1.590	44.709	41.111	5.041	1.673	.391	97.639	151.500
61	.033	1.945	1.005	4.656	7.861	49.000	44.080	5.410	2.005	.560	118.771	224.133
62	.000	.000	.351	.000	.000	.000	.000	.000	.000	.000	.351	.352
63	.000	.000	1.151	.000	.000	.009	.018	.000	.000	.000	1.177	1.508
64	.000	.000	2.000	.000	.000	.173	.258	.000	.000	.000	2.520	6.082
65	.000	.000	2.917	.000	.000	1.270	1.548	.001	.019	.080	5.837	17.540
66	.000	.001	4.690	.000	.000	8.850	5.214	1.151	2.102	2.028	20.119	48.310
67	.000	.007	6.412	.000	.000	11.922	11.840	6.215	6.412	4.154	46.972	72.836
68	.000	.198	8.416	.008	.095	31.008	30.340	22.144	14.928	7.774	115.068	170.995
69	.051	1.251	8.840	2.727	4.412	44.406	41.514	22.142	13.938	7.441	148.800	267.669
70	.000	.000	.000	.000	.000	.000	.000	.000	.000	.000	.000	.000
71	.000	.000	13.540	.000	.000	1.195	1.377	.331	.171	.678	16.891	74.224
72	.000	.037	23.049	.000	.000	8.421	8.182	9.220	13.283	15.102	79.274	140.226
73	.000	.000	.000	.000	.000	.000	.000	.000	.000	.000	.000	.000
74	.000	.000	.000	.000	.000	.000	.000	.000	.000	.000	.000	.000
75	.000	.000	.001	.000	.000	.000	.000	.000	.000	.000	.001	.001
76	.000	.000	.161	.000	.000	.000	.000	.000	.000	.000	.161	.161
77	.000	.000	1.053	.000	.000	.000	.000	.000	.000	.000	1.053	1.053
78	.000	.000	3.613	.000	.000	.001	.000	.000	.000	.000	3.613	3.649
79	.000	.000	9.527	.000	.000	.025	.078	.000	.000	.000	9.589	10.322
80	.000	.000	10.330	.000	.000	.215	.271	.000	.002	.012	10.729	24.759
81	.000	.000	30.237	.000	.000	1.016	1.128	.074	.272	.829	33.556	50.590
82	.000	.001	39.814	.000	.000	3.117	3.180	1.609	3.673	7.113	58.507	98.951
83	.000	.007	46.235	.000	.000	7.012	6.760	8.274	13.895	20.256	102.442	150.118
84	.000	.037	49.127	.001	.005	12.580	11.607	10.589	24.764	32.307	152.107	227.016
85	.000	.110	49.010	.028	.074	18.135	17.352	20.014	35.536	37.902	180.162	215.203
86	.000	.084	53.763	.017	.046	16.729	15.529	26.400	33.069	37.205	182. [illegible]	[illegible]

EXAMPLE FOUR - APPLICATION FOR 30 SOURCES AND 90 RECEPTORS
POLLUTANT TSP IS BEING MODELED USING 3 HRS OF MET DATA
DATA INPUT BY TOM PIERCE 20 FEBRUARY 1980

PART SUMMARY CONCENTRATION TABLE(MICROGRAMS/M**3) 79/ 292 : HOUR 12

RECEPTOR NO.	NAME	EAST COORD	NORTH COORD	RECEPTOR HT ABV GRD (M)	RECEPTOR GRD-LVL ELEV (USER HT UNITS)	TOTAL FROM SIGNIF POINT SOURCES	TOTAL FROM ALL SOURCES	CONCENTRATION RANK
1	10, 1.0	2.17	1.99	.0	.0	10.0404	40.0473	38
2	20, 1.0	2.34	1.94	.0	.0	13.3068	51.2729	34
3	30, 1.0	2.50	1.87	.0	.0	16.5649	61.5801	33
4	40, 1.0	2.64	1.77	.0	.0	23.1581	75.0797	31
5	50, 1.0	2.77	1.64	.0	.0	44.3412	102.1247	26
6	60, 1.0	2.87	1.50	.0	.0	91.1752	148.6122	19
7	70, 1.0	2.94	1.34	.0	.0	129.6509	179.0116	11
8	80, 1.0	2.98	1.17	.0	.0	128.3781	163.4676	13
9	90, 1.0	3.00	1.00	.0	.0	110.0742	146.1285	22
10	100, 1.0	2.98	.83	.0	.0	97.7330	157.9959	17
11	110, 1.0	2.94	.66	.0	.0	94.6919	147.4339	20
12	120, 1.0	2.87	.50	.0	.0	98.4128	159.7315	16
13	130, 1.0	2.77	.36	.0	.0	87.5560	152.8386	18
14	140, 1.0	2.64	.23	.0	.0	56.8071	107.5086	25
15	150, 1.0	2.50	.13	.0	.0	34.0475	62.4296	32
16	160, 1.0	2.34	.06	.0	.0	23.0508	35.4591	39
17	170, 1.0	2.17	.03	.0	.0	16.3135	19.6969	44
18	180, 1.0	2.00	.00	.0	.0	9.5891	10.3217	47
19	190, 1.0	1.83	.03	.0	.0	4.9167	5.0387	51
20	200, 1.0	1.66	.06	.0	.0	2.9605	2.9781	54
21	210, 1.0	1.50	.13	.0	.0	1.7315	1.7336	58
22	220, 1.0	1.36	.23	.0	.0	.9558	.9556	65
23	230, 1.0	1.23	.36	.0	.0	.8545	.8545	68
24	240, 1.0	1.13	.50	.0	.0	.1347	.1348	71
25	250, 1.0	1.06	.66	.0	.0	.0105	.0105	78
26	260, 1.0	1.03	.83	.0	.0	.0002	.0002	83
27	270, 1.0	1.00	1.00	.0	.0	.0021	.0021	81
28	280, 1.0	1.03	1.17	.0	.0	.0348	.0348	75
29	290, 1.0	1.06	1.34	.0	.0	.4063	.4063	69
30	300, 1.0	1.13	1.50	.0	.0	1.6478	1.6478	59
31	310, 1.0	1.23	1.64	.0	.0	1.9743	1.9747	57
32	320, 1.0	1.36	1.77	.0	.0	1.2680	1.1230	63
33	330, 1.0	1.50	1.87	.0	.0	.5843	1.5874	60
34	340, 1.0	1.66	1.94	.0	.0	1.1103	5.6701	50
35	350, 1.0	1.83	1.99	.0	.0	3.2214	15.0503	46
36	360, 1.0	2.00	2.00	.0	.0	6.5200	27.5793	41
37	1	1.00	2.50	.0	.0	.0335	.0774	74
38	2	1.25	2.50	.0	.0	.6648	2.1996	55
39	3	1.00	2.25	.0	.0	.0011	.0292	76
40	4	1.25	2.25	.0	.0	.3193	2.0755	56
41	5	1.00	2.00	.0	.0	.0118	.0985	73
42	6	1.50	2.00	.0	.0	.4797	3.2262	53
43	7	.75	1.75	.0	.0	.0072	.0072	79
44	8	1.00	1.60	.0	.0	.5405	.5405	66
45	9	.75	1.50	.0	.0	.0030	.0030	80

46	10	1.00	1.50	.0	.0	.4909	.4909	67
47	11	.95	1.25	.0	.0	.0245	.0245	77
48	12	1.25	1.25	.0	.0	1.4739	1.4739	62
49	13	2.00	1.00	.0	.0	25.2295	27.4600	42
50	14	2.25	1.25	.0	.0	46.4599	49.3053	36
51	15	3.00	1.75	.0	.0	30.7713	91.9312	29
52	16	3.00	1.50	.0	.0	99.5294	167.5389	12
53	17	3.25	1.50	.0	.0	99.2577	188.9020	8
54	18	3.50	1.50	.0	.0	88.0568	183.8471	9
55	19	3.50	1.25	.0	.0	168.9572	276.5873	1
56	20	3.00	1.00	.0	.0	110.0342	146.1285	21
57	21	3.50	1.00	.0	.0	174.7429	264.3818	5
58	22	2.50	.75	.0	.0	53.4485	77.7505	30
59	23	2.75	.75	.0	.0	76.6756	109.3585	24
60	24	3.00	.75	.0	.0	97.6391	161.5089	14
61	25	3.25	.75	.0	.0	118.7705	224.1334	7
62	26	1.25	.50	.0	.0	.3512	.3524	70
63	27	1.50	.50	.0	.0	1.1775	1.5076	61
64	28	1.75	.50	.0	.0	2.5202	6.0824	49
65	29	2.00	.50	.0	.0	5.8365	17.5405	45
66	30	2.25	.50	.0	.0	20.1191	48.3187	37
67	31	2.50	.50	.0	.0	46.9719	92.8356	28
68	32	3.00	.50	.0	.0	115.0676	180.9947	10
69	33	3.50	.50	.0	.0	148.9005	267.6689	3
70	34	.75	.25	.0	.0	.0000	.0000	84
71	35	2.25	.25	.0	.0	16.9915	34.2240	40
72	36	2.75	.25	.0	.0	79.2785	140.2261	23
73	37	.50	.00	.0	.0	.0000	.0000	86
74	38	.75	.00	.0	.0	.0000	.0000	85
75	39	1.00	.00	.0	.0	.0007	.0007	82
76	40	1.25	.00	.0	.0	.1012	.1012	72
77	41	1.50	.00	.0	.0	1.0528	1.0530	64
78	42	1.75	.00	.0	.0	3.6133	3.6490	52
79	43	2.00	.00	.0	.0	9.5891	10.3217	48
80	44	2.25	.00	.0	.0	19.7294	24.7590	43
81	45	2.50	.00	.0	.0	33.5563	50.5905	35
82	46	2.75	.00	.0	.0	58.5073	94.9515	27
83	47	3.00	.00	.0	.0	102.4418	160.1183	15
84	48	3.25	.00	.0	.0	152.1969	227.0162	6
85	49	3.50	.00	.0	.0	189.1618	275.2028	2
86	50	3.50	-.05	.0	.0	182.7415	265.0416	4

EXAMPLE FOUR - APPLICATION FOR 30 SOURCES AND 50 RECEPTORS
POLLUTANT TSP IS BEING MODELED USING 3 HRS OF MET DATA
DATA INPUT BY TOM PIEROF 20 FEBRUARY 1980

PART CONTRIBUTION(MICROGRAMS/M**3) FROM SIGNIFICANT POINT SOURCES 79/ 292 : HOUR 13

HOUR	THETA (DEG)	SPEED (M/S)	MIXING HEIGHT (M)	TEMP (K)	STABILITY CLASS
13	320.00	2.90	1850.00	299.00	2

	1	2	3	4	5	6	7	8	9	10
FINAL HT (M)	665.31	535.84	535.84	317.79	317.79	317.79	524.75	524.75	524.75	407.39
FINAL HT (M)	407.39	407.39	245.80	245.80	162.89	162.89	162.89	162.89	162.89	162.89
FINAL HT (M)	162.89	162.89	458.78	458.78	458.78	458.78	430.08	430.08	430.08	430.08
DIST FIN HT (KM)	1.460	1.272	1.272	.894	.894	.894	1.299	1.299	1.299	1.090
DIST FIN HT (KM)	1.090	1.090	.769	.769	.581	.581	.581	.581	.581	.581
DIST FIN HT (KM)	.581	.581	1.154	1.154	1.154	1.154	1.125	1.125	1.125	1.125

RANK	1	2	3	4	5	6	7	8	9	10	TOTAL SIGNIF POINT	TOTAL ALL POINT SOURCES
SOURCE #	8	27	1	13	14	3	2	4	5	6		
RECEP #												
1	.000	.115	.000	.000	.000	.000	.000	.000	.000	.000	.115	.211
2	.000	.079	.000	.000	.000	.000	.000	.000	.000	.000	.079	.148
3	.000	.081	.000	.000	.000	.000	.000	.000	.000	.000	.081	.158
4	.000	.116	.000	.000	.000	.000	.000	.000	.000	.000	.116	.239
5	.000	.207	.000	.000	.000	.000	.000	.000	.000	.000	.207	.475
6	.000	.423	.000	.013	.004	.000	.000	.000	.000	.000	.440	1.291
7	.037	.907	.000	.380	.160	.000	.000	.000	.000	.000	1.484	4.681
8	.509	1.914	.000	3.845	1.944	.000	.001	.000	.000	.000	8.214	19.108
9	1.470	3.787	.000	17.190	10.563	.006	.004	.000	.000	.000	33.030	64.175
10	1.724	6.782	.000	40.588	30.468	.050	.047	.000	.000	.000	79.659	142.324
11	1.013	10.743	.000	55.904	51.634	.310	.275	.000	.000	.000	119.778	228.459
12	.310	14.815	.000	46.719	54.102	1.387	1.182	.011	.001	.000	118.527	264.720
13	.047	17.606	.000	23.866	35.496	4.597	3.838	.442	.066	.005	85.964	193.000
14	.003	17.923	.000	7.176	14.281	11.553	9.606	4.272	1.323	.261	66.398	137.607
15	.000	15.588	.003	1.175	3.331	22.503	18.911	12.944	6.773	2.671	83.801	142.152
16	.000	11.588	.022	.092	.408	34.679	29.865	13.131	10.344	7.626	107.755	160.470
17	.000	7.389	.088	.003	.022	43.093	38.548	8.230	5.249	6.024	104.647	155.809
18	.000	4.074	.216	.000	.000	43.998	41.457	.380	.591	.879	91.596	139.432
19	.000	1.970	.361	.000	.000	37.660	37.926	.004	.005	.007	77.932	115.141
20	.000	.854	.821	.000	.000	27.658	30.227	.000	.000	.000	59.160	81.204
21	.000	.343	.313	.000	.000	17.938	21.597	.000	.000	.000	40.191	51.262
22	.000	.135	.126	.000	.000	10.661	14.322	.000	.000	.000	25.243	30.288
23	.000	.055	.018	.000	.000	6.085	9.185	.000	.000	.000	15.343	17.141
24	.000	.026	.000	.000	.000	3.526	5.950	.000	.000	.000	9.502	10.001
25	.000	.016	.000	.000	.000	2.331	4.031	.000	.000	.000	6.378	6.498
26	.000	.014	.000	.000	.000	2.140	3.403	.000	.000	.000	5.557	5.616
27	.000	.019	.000	.000	.000	2.061	3.178	.000	.000	.000	5.259	5.339
28	.000	.044	.000	.000	.000	1.571	2.243	.000	.000	.000	3.858	4.039
29	.000	.148	.000	.000	.000	.512	.716	.000	.000	.000	1.377	1.970
30	.000	.582	.000	.000	.000	.028	.052	.000	.000	.000	.662	2.951
31	.000	1.912	.000	.000	.000	.000	.001	.000	.000	.000	1.912	8.797

32	.000	3.763	.000	.000	.000	.000	.000	.000	.000	.000	3.763	14.258
33	.000	3.475	.000	.000	.000	.000	.000	.000	.000	.000	3.475	10.437
34	.000	1.769	.000	.000	.000	.000	.000	.000	.000	.000	1.769	4.164
35	.000	.657	.000	.000	.000	.000	.000	.000	.000	.000	.657	1.328
36	.000	.242	.000	.000	.000	.000	.000	.000	.000	.000	.242	.456
37	.000	.003	.000	.000	.000	.000	.000	.000	.000	.000	.003	.003
38	.000	.029	.000	.000	.000	.000	.000	.000	.000	.000	.029	.035
39	.000	.364	.000	.000	.000	.000	.000	.000	.000	.000	.364	.820
40	.000	.496	.000	.000	.000	.000	.000	.000	.000	.000	.496	.865
41	.000	2.154	.000	.000	.000	.000	.000	.000	.000	.000	2.154	7.071
42	.000	1.917	.000	.000	.000	.000	.000	.000	.000	.000	1.917	4.725
43	.000	.000	.000	.000	.000	.000	.000	.000	.000	.000	.001	.002
44	.000	.141	.000	.000	.000	.002	.007	.000	.000	.000	.150	.764
45	.000	.000	.000	.000	.000	.009	.062	.000	.000	.000	.071	.072
46	.000	.098	.000	.000	.000	.040	.084	.000	.000	.000	.223	.652
47	.000	.018	.000	.000	.000	.833	1.398	.000	.000	.000	2.245	2.320
48	.000	1.084	.000	.000	.000	1.007	1.103	.000	.000	.000	3.194	7.324
49	.000	17.622	.000	.000	.032	.781	.763	.000	.000	.000	19.198	71.375
50	.000	11.548	.000	5.684	14.076	.008	.000	.000	.000	.000	31.325	61.794
51	.000	.021	.000	.000	.000	.000	.000	.000	.000	.000	.021	.041
52	.000	.231	.000	.003	.001	.000	.000	.000	.000	.000	.235	.641
53	.000	.072	.000	.000	.000	.000	.000	.000	.000	.000	.073	.179
54	.000	.022	.000	.000	.000	.000	.000	.000	.000	.000	.022	.051
55	.014	.167	.000	.021	.009	.000	.000	.000	.000	.000	.211	.707
56	1.470	3.787	.000	17.190	10.563	.006	.006	.000	.000	.000	33.031	64.175
57	.573	.731	.000	.041	.486	.000	.000	.000	.000	.000	2.731	8.324
58	.000	17.666	.000	15.046	29.506	.945	.840	.000	.000	.000	64.005	129.085
59	.114	12.864	.000	49.297	54.090	.319	.287	.000	.000	.000	116.971	211.027
60	1.812	7.901	.000	47.387	37.831	.102	.093	.000	.000	.000	95.126	173.010
61	3.829	4.288	.000	23.242	15.583	.032	.030	.000	.000	.000	47.004	101.219
62	.000	.106	.000	.000	.000	7.423	10.669	.000	.000	.000	18.198	20.347
63	.000	1.029	.000	.000	.000	18.542	20.905	.000	.000	.000	40.476	49.261
64	.000	4.481	.000	.000	.000	23.391	22.825	.000	.000	.000	50.697	70.247
65	.000	10.821	.000	.000	.003	18.628	16.757	1.032	.390	.024	47.653	86.210
66	.000	16.882	.000	.138	.849	10.890	9.396	1.342	.171	.004	39.673	95.081
67	.000	19.011	.000	5.885	14.009	5.180	4.390	.233	.018	.000	48.694	115.026
68	1.190	12.307	.000	55.256	54.689	.820	.704	.004	.000	.000	124.970	279.724
69	7.896	4.536	.000	24.174	17.301	.105	.093	.000	.000	.000	54.104	128.792
70	.000	.000	.007	.000	.000	.019	.077	.000	.000	.000	.103	.103
71	.000	12.778	.002	.041	.254	26.148	22.584	7.731	5.515	2.537	77.592	125.547
72	.025	17.882	.000	15.710	25.598	8.001	6.634	2.142	.551	.088	76.651	167.576
73	.000	.000	.000	.000	.000	.000	.000	.000	.000	.000	.000	.000
74	.000	.000	.035	.000	.000	.010	.040	.000	.000	.000	.085	.085
75	.000	.001	.736	.000	.000	.365	.838	.000	.000	.000	1.939	1.950
76	.000	.021	1.577	.000	.000	3.736	5.910	.000	.000	.000	11.240	12.206
77	.000	.229	1.202	.000	.000	15.367	18.978	.000	.000	.000	35.776	45.607
78	.000	1.259	.563	.000	.000	32.907	34.898	.000	.000	.000	69.228	100.761
79	.000	4.074	.216	.000	.000	43.998	41.457	.380	.591	.879	91.596	139.432
80	.000	8.735	.077	.013	.080	41.810	36.822	8.105	8.008	8.208	111.858	165.272
81	.000	13.592	.025	.650	1.913	30.096	26.215	20.750	15.035	8.695	117.871	176.184
82	.012	16.457	.007	6.562	12.065	19.187	15.877	15.913	8.709	3.714	98.504	171.407
83	.380	16.359	.002	23.226	31.122	10.423	8.548	6.423	2.786	.935	100.205	227.723
84	3.184	13.020	.001	40.470	43.686	5.158	4.227	1.855	.669	.187	113.357	304.138
85	10.553	10.476	.000	43.386	40.337	2.387	1.969	.855	.142	.035	109.740	300.170
86	10.101	10.967	.000	42.703	40.581	2.987	2.455	.752	.261	.073	110	[illegible].487

EXAMPLE FOUR - APPLICATION FOR 30 SOURCES AND 50 RECEPTORS
POLLUTANT TSP IS BEING MODELED USING 3 HRS OF MET DATA
DATA INPUT BY TOM PIERCE 20 FEBRUARY 1980

PART SUMMARY CONCENTRATION TABLE(MICROGRAMS/M**3) 79 / 292 : HOUR 13

RECEPTOR No.	NAME	EAST COORD	NORTH COORD	RECEPTOR HT ABV GRD (M)	RECEPTOR GRD-LVL ELEV (USER HT UNITS)	TOTAL FROM SIGNIF POINT SOURCES	TOTAL FROM ALL SOURCES	CONCENTRATION RANK
1	10, 1.0	2.17	1.98	.0	.0	.1146	.2110	74
2	20, 1.0	2.34	1.94	.0	.0	.0794	.1481	77
3	30, 1.0	2.50	1.87	.0	.0	.0814	.1581	76
4	40, 1.0	2.64	1.77	.0	.0	.1157	.2387	73
5	50, 1.0	2.77	1.64	.0	.0	.2070	.4747	71
6	60, 1.0	2.87	1.50	.0	.0	.4399	1.2913	64
7	70, 1.0	2.94	1.34	.0	.0	1.4838	4.6806	56
8	80, 1.0	2.98	1.17	.0	.0	8.2135	19.1083	42
9	90, 1.0	3.00	1.00	.0	.0	33.0305	64.1751	35
10	100, 1.0	2.98	.83	.0	.0	79.4593	142.7243	17
11	110, 1.0	2.94	.66	.0	.0	119.7781	228.4589	6
12	120, 1.0	2.87	.50	.0	.0	118.5272	264.7293	5
13	130, 1.0	2.77	.36	.0	.0	85.9684	192.9996	9
14	140, 1.0	2.64	.23	.0	.0	66.3976	137.6074	21
15	150, 1.0	2.50	.13	.0	.0	83.8010	142.1518	18
16	160, 1.0	2.34	.06	.0	.0	107.7552	160.4697	15
17	170, 1.0	2.17	.02	.0	.0	104.6468	155.8089	16
18	180, 1.0	2.00	.00	.0	.0	91.5958	139.4317	19
19	190, 1.0	1.83	.02	.0	.0	77.9317	115.1406	25
20	200, 1.0	1.66	.06	.0	.0	59.1597	81.2039	31
21	210, 1.0	1.50	.13	.0	.0	40.1909	51.2624	37
22	220, 1.0	1.36	.23	.0	.0	25.2432	30.2881	40
23	230, 1.0	1.23	.36	.0	.0	15.3426	17.1414	43
24	240, 1.0	1.13	.50	.0	.0	9.5024	10.0013	47
25	250, 1.0	1.06	.66	.0	.0	6.3783	6.4976	52
26	260, 1.0	1.02	.83	.0	.0	5.5565	5.6161	53
27	270, 1.0	1.00	1.00	.0	.0	5.2585	5.3392	54
28	280, 1.0	1.02	1.17	.0	.0	3.8578	4.0395	58
29	290, 1.0	1.06	1.34	.0	.0	1.3765	1.9695	61
30	300, 1.0	1.13	1.50	.0	.0	.4623	2.9508	59
31	310, 1.0	1.23	1.64	.0	.0	1.9125	8.7967	48
32	320, 1.0	1.36	1.77	.0	.0	3.7632	14.2580	44
33	330, 1.0	1.50	1.87	.0	.0	3.4747	10.4367	46
34	340, 1.0	1.66	1.94	.0	.0	1.7689	4.1638	57
35	350, 1.0	1.83	1.98	.0	.0	.4567	1.3278	63
36	360, 1.0	2.00	2.00	.0	.0	.2419	.4561	72
37	1	1.00	2.50	.0	.0	.0028	.0030	84
38	2	1.25	2.40	.0	.0	.0285	.0351	83
39	3	1.00	2.25	.0	.0	.3689	.8204	66
40	4	1.25	2.25	.0	.0	.4963	.8653	65
41	5	1.20	2.00	.0	.0	2.1539	7.0710	51
42	6	1.50	2.00	.0	.0	1.9165	4.7247	55
43	7	.75	1.70	.0	.0	.0006	.0022	85
44	8	1.00	1.60	.0	.0	.1504	.7639	67
45	9	.75	1.50	.0	.0	.0707	.0719	80

46	10	1.00	1.50	.0	.0	.2232	.6518	69
47	11	.95	1.25	.0	.0	2.2889	2.3196	60
48	12	1.25	1.25	.0	.0	3.1937	7.3238	50
49	13	2.00	1.00	.0	.0	19.1983	71.3747	32
50	14	2.25	1.25	.0	.0	31.3249	61.7943	36
51	15	3.00	1.75	.0	.0	.0207	.0812	82
52	16	3.00	1.50	.0	.0	.2352	.6413	70
53	17	3.25	1.50	.0	.0	.0728	.1789	75
54	18	3.50	1.50	.0	.0	.0223	.0515	81
55	19	3.50	1.25	.0	.0	.2110	.7078	68
56	20	3.00	1.00	.0	.0	33.0305	64.1752	34
57	21	3.50	1.00	.0	.0	2.7310	8.3238	49
58	22	2.50	.75	.0	.0	64.0052	129.0852	22
59	23	2.75	.75	.0	.0	1.16.9711	211.0275	8
60	24	3.00	.75	.0	.0	95.1263	173.0100	11
61	25	3.25	.75	.0	.0	47.0038	101.2191	27
62	26	1.25	.50	.0	.0	18.1985	20.3467	41
63	27	1.50	.50	.0	.0	40.4762	49.2608	38
64	28	1.75	.50	.0	.0	50.6968	70.2466	33
65	29	2.00	.50	.0	.0	47.6532	86.2105	30
66	30	2.25	.50	.0	.0	39.6732	95.0807	29
67	31	2.50	.50	.0	.0	48.6930	115.0257	26
68	32	3.00	.50	.0	.0	1.24.9700	279.7236	4
69	33	3.50	.50	.0	.0	54.1037	128.7917	23
70	34	.75	.25	.0	.0	.1030	.1030	78
71	35	2.25	.25	.0	.0	77.5922	125.5466	24
72	36	2.75	.25	.0	.0	76.6508	167.5761	13
73	37	.50	.00	.0	.0	.0004	.0004	86
74	38	.75	.00	.0	.0	.0846	.0846	79
75	39	1.00	.00	.0	.0	1.9394	1.9500	62
76	40	1.25	.00	.0	.0	11.2399	12.2057	45
77	41	1.50	.00	.0	.0	35.7761	45.6033	39
78	42	1.75	.00	.0	.0	69.2281	100.7611	28
79	43	2.00	.00	.0	.0	91.5958	139.4317	20
80	44	2.25	.00	.0	.0	1.11.8585	165.2719	14
81	45	2.50	.00	.0	.0	1.17.8707	176.1843	10
82	46	2.75	.00	.0	.0	98.5038	171.4070	12
83	47	3.00	.00	.0	.0	1.00.2050	227.7233	7
84	48	3.25	.00	.0	.0	1.13.3566	304.1382	2
85	49	3.50	.00	.0	.0	1.09.7395	300.1701	3
86	50	3.50	-.05	.0	.0	1.10.8780	305.4872	1

EXAMPLE FOUR - APPLICATION FOR 30 SOURCES AND 90 RECEPTORS
POLLUTANT TSP IS BEING MODELED USING 3 HRS OF MET DATA
DATA INPUT BY TOM PIEROF 20 FEBRUARY 1980

PART CONTRIBUTION(MICROGRAMS/M**3) FROM SIGNIFICANT POINT SOURCES 79/ 292 : HOUR 14

HOUR	THETA (DEG)	SPEED (M/S)	MIXING HEIGHT(M)	TEMP (K)	STABILITY CLASS
14	305.00	3.00	1900.00	299.00	2

	1	2	3	4	5	6	7	8	9	10
FINAL HT (M)	649.80	522.98	522.98	309.86	309.86	309.86	511.26	511.26	511.26	396.81
FINAL HT (M)	396.81	396.81	239.28	239.28	158.46	158.46	158.46	158.46	158.46	158.46
FINAL HT (M)	158.46	158.46	447.49	447.49	447.49	447.49	419.08	419.08	419.08	419.08
DIST FIN HT (KM)	1.460	1.272	1.272	.898	.898	.898	1.299	1.299	1.299	1.090
DIST FIN HT (KM)	1.090	1.090	.769	.769	.581	.581	.581	.581	.581	.581
DIST FIN HT (KM)	.581	.581	1.154	1.154	1.154	1.154	1.125	1.125	1.125	1.125

RANK	1	2	3	4	5	6	7	8	9	10	TOTAL SIGNIF POINT	TOTAL ALL POINT SOURCES
SOURCE #	8	27	1	13	14	3	2	4	5	6		
RECEP #												
1	.000	6.183	.000	.000	.000	.000	.000	.000	.000	.000	6.183	16.651
2	.000	6.248	.000	.000	.000	.000	.000	.000	.000	.000	6.248	17.004
3	.000	6.983	.000	.000	.000	.000	.001	.000	.000	.000	6.984	19.680
4	.000	8.474	.000	.004	.004	.002	.004	.000	.000	.000	8.489	25.321
5	.000	10.738	.000	.302	.207	.015	.024	.000	.000	.000	11.286	36.262
6	.005	13.604	.000	3.826	2.879	.087	.116	.000	.000	.000	20.518	60.348
7	.216	16.546	.000	19.193	15.253	.419	.490	.000	.000	.000	52.116	114.197
8	.638	18.660	.000	43.736	39.142	1.623	1.725	.000	.000	.000	105.524	192.797
9	.504	18.965	.000	52.045	55.766	5.026	4.979	.000	.000	.000	138.186	238.114
10	.152	16.969	.000	36.465	47.012	12.394	11.700	.005	.000	.000	124.698	232.190
11	.018	13.110	.003	18.372	23.721	24.390	22.358	.261	.031	.002	98.263	209.126
12	.001	8.604	.032	3.092	6.935	38.469	34.810	3.269	.838	.134	96.185	158.803
13	.000	4.730	.214	.328	1.087	48.906	44.370	13.249	6.104	1.934	120.922	158.997
14	.000	2.151	.907	.014	.080	50.417	46.554	19.957	14.891	8.215	143.186	190.706
15	.000	.801	2.585	.000	.002	42.823	40.487	11.187	12.699	11.333	121.478	182.558
16	.000	.242	5.167	.000	.000	29.365	29.447	1.983	3.462	5.646	75.308	137.221
17	.000	.059	7.481	.000	.000	16.895	18.132	.086	.244	.678	43.406	89.752
18	.000	.012	7.904	.000	.000	8.205	9.618	.000	.001	.005	25.745	50.921
19	.000	.002	6.288	.000	.000	3.444	4.510	.000	.000	.000	14.244	24.276
20	.000	.000	4.859	.000	.000	1.296	1.942	.000	.000	.000	8.097	11.116
21	.000	.000	3.083	.000	.000	.463	.811	.000	.000	.000	4.317	5.170
22	.000	.000	1.376	.000	.000	.171	.355	.000	.000	.000	1.902	2.114
23	.000	.000	.355	.000	.000	.073	.180	.000	.000	.000	.607	.653
24	.000	.000	.027	.000	.000	.041	.118	.000	.000	.000	.186	.195
25	.000	.000	.000	.000	.000	.039	.115	.000	.000	.000	.154	.156
26	.000	.000	.000	.000	.000	.061	.187	.000	.000	.000	.248	.248
27	.000	.000	.000	.000	.000	.155	.431	.000	.000	.000	.586	.586
28	.000	.000	.000	.000	.000	.469	1.060	.000	.000	.000	1.529	1.529
29	.000	.000	.000	.000	.000	.894	1.664	.000	.000	.000	2.559	2.559
30	.000	.002	.000	.000	.000	.514	.968	.000	.000	.000	1.484	1.501
31	.000	.054	.000	.000	.000	.065	.169	.000	.000	.000	.289	.677

32	.000	.657	.000	.000	.000	.003	.013	.000	.000	.000	.672	4.120
33	.000	2.771	.000	.000	.000	.000	.001	.000	.000	.000	2.772	13.016
34	.000	5.530	.000	.000	.000	.000	.000	.000	.000	.000	5.530	19.097
35	.000	6.796	.000	.000	.000	.000	.000	.000	.000	.000	6.796	20.230
36	.000	6.586	.000	.000	.000	.000	.000	.000	.000	.000	6.586	18.185
37	.000	.028	.000	.000	.000	.000	.000	.000	.000	.000	.028	.036
38	.000	.537	.000	.000	.000	.000	.000	.000	.000	.000	.537	.936
39	.000	.080	.000	.000	.000	.000	.000	.000	.000	.000	.080	.371
40	.000	1.404	.000	.000	.000	.000	.000	.000	.000	.000	1.404	3.997
41	.000	.490	.000	.000	.000	.000	.000	.000	.000	.000	.490	2.933
42	.000	3.594	.000	.000	.000	.000	.000	.000	.000	.000	3.594	13.941
43	.000	.000	.000	.000	.000	.000	.003	.000	.000	.000	.003	.003
44	.000	.000	.000	.000	.000	.062	.220	.000	.000	.000	.282	.283
45	.000	.000	.000	.000	.000	.002	.042	.000	.000	.000	.044	.044
46	.000	.000	.000	.000	.000	.248	.633	.000	.000	.000	.881	.881
47	.000	.000	.000	.000	.000	.244	.686	.000	.000	.000	.929	.929
48	.000	.003	.000	.000	.000	2.945	3.914	.000	.000	.000	6.862	6.881
49	.000	2.376	.000	.000	.000	16.959	18.047	.000	.000	.000	37.382	48.245
50	.000	12.970	.000	.164	2.084	3.354	3.818	.000	.000	.000	22.390	68.441
51	.000	4.832	.000	.006	.005	.002	.004	.000	.000	.000	4.849	13.972
52	.015	11.479	.000	2.591	1.867	.068	.089	.000	.000	.000	16.109	48.534
53	.025	7.880	.000	1.111	.781	.082	.055	.000	.000	.000	9.894	31.194
54	.023	5.142	.000	.462	.328	.027	.034	.000	.000	.000	6.015	19.336
55	.997	10.252	.000	8.325	6.030	.306	.339	.000	.000	.000	26.248	73.204
56	.504	18.965	.000	52.945	55.766	5.026	4.970	.000	.000	.000	138.186	238.114
57	4.113	14.900	.000	34.122	27.410	1.897	1.898	.000	.000	.000	84.340	189.981
58	.000	7.083	.001	.172	1.005	29.721	28.114	.095	.003	.000	66.193	95.582
59	.000	11.981	.001	6.081	13.502	23.177	21.623	.053	.003	.000	76.421	151.062
60	.112	15.782	.001	29.380	40.176	16.456	15.296	.034	.002	.000	117.238	236.879
61	1.590	17.374	.001	51.600	54.650	11.028	10.273	.020	.002	.000	146.536	286.571
62	.000	.000	.050	.000	.000	.218	.483	.000	.000	.000	.750	.944
63	.000	.001	.084	.000	.000	2.691	4.083	.000	.000	.000	6.859	11.312
64	.000	.018	.089	.000	.000	11.931	14.421	.000	.000	.000	26.459	38.392
65	.000	.200	.076	.000	.000	27.303	28.827	.173	.287	.134	57.000	72.045
66	.000	1.047	.062	.000	.000	40.558	39.560	4.663	2.476	.486	88.853	107.667
67	.000	3.216	.050	.011	.090	45.283	42.227	5.503	1.926	.329	98.634	122.765
68	.016	10.705	.027	8.710	15.192	33.995	30.623	2.891	.606	.100	102.375	203.198
69	3.256	15.432	.014	42.970	45.887	17.962	16.171	.595	.152	.029	142.456	319.527
70	.000	.000	.000	.000	.000	.000	.000	.000	.000	.000	.000	.000
71	.000	.332	1.203	.000	.000	33.485	33.494	2.417	4.064	4.989	79.944	124.025
72	.000	3.265	.670	.103	.394	51.625	47.029	21.490	17.955	6.661	145.382	190.552
73	.000	.000	.000	.000	.000	.000	.000	.000	.000	.000	.000	.000
74	.000	.000	.000	.000	.000	.000	.000	.000	.000	.000	.000	.000
75	.000	.000	.108	.000	.000	.000	.000	.000	.000	.000	.108	.108
76	.000	.000	1.557	.000	.000	.008	.023	.000	.000	.000	1.584	1.586
77	.000	.000	4.509	.000	.000	.217	.401	.000	.000	.000	5.127	5.466
78	.000	.001	6.320	.000	.000	1.947	2.728	.000	.000	.000	10.996	15.380
79	.000	.012	7.904	.000	.000	8.205	9.618	.000	.001	.005	25.745	50.920
80	.000	.098	7.945	.000	.000	20.512	21.432	.720	.779	1.719	52.805	107.127
81	.000	.458	6.672	.000	.001	35.581	34.512	7.026	10.193	12.448	106.871	179.644
82	.000	1.414	4.993	.011	.063	47.550	44.040	25.265	27.198	24.634	175.136	249.523
83	.000	3.175	3.477	.317	.823	52.786	47.508	36.272	31.539	23.264	199.157	268.130
84	.022	5.597	2.318	2.520	4.531	51.238	45.345	32.285	24.070	15.416	183.350	260.230
85	.397	8.189	1.500	8.924	12.586	45.125	39.590	22.307	14.892	8.653	162.174	272.426
86	.303	7.482	2.120	7.221	10.447	46.863	41.124	26.068	18.523	11.565	171.7[illegible]	[illegible]9.842

EXAMPLE FOUR - APPLICATION FOR 30 SOURCES AND 50 RECEPTORS
POLLUTANT TSP IS BEING MODELED USING 3 HRS OF MET DATA
DATA INPUT BY TOM PIERCE 20 FEBRUARY 1980

PART SUMMARY CONCENTRATION TABLE(MICROGRAMS/M**3) 79/ 292 : HOUR 14

RECEPTOR NO.	NAME	EAST COORD	NORTH COORD	RECEPTOR HT ABV GRD (M)	RECEPTOR GRD-LVL ELEV (USER HT UNITS)	TOTAL FROM SIGNIF POINT SOURCES	TOTAL FROM ALL SOURCES	CONCENTRATION RANK
1	10, 1.0	2.17	1.98	.0	.0	6.1831	16.6506	50
2	20, 1.0	2.34	1.94	.0	.0	6.2478	17.0041	49
3	30, 1.0	2.50	1.87	.0	.0	6.9840	19.6799	45
4	40, 1.0	2.64	1.77	.0	.0	8.8882	25.3213	42
5	50, 1.0	2.77	1.64	.0	.0	11.2862	36.2619	40
6	60, 1.0	2.87	1.50	.0	.0	20.5185	60.3477	34
7	70, 1.0	2.94	1.34	.0	.0	52.1164	114.1967	26
8	80, 1.0	2.98	1.17	.0	.0	105.5236	192.7975	14
9	90, 1.0	3.00	1.00	.0	.0	138.1856	238.1135	9
10	100, 1.0	2.98	.83	.0	.0	124.6978	232.1898	11
11	110, 1.0	2.94	.66	.0	.0	98.2627	209.1261	12
12	120, 1.0	2.87	.50	.0	.0	96.1850	154.8028	21
13	130, 1.0	2.77	.36	.0	.0	120.9219	158.9970	20
14	140, 1.0	2.64	.23	.0	.0	143.1860	190.7062	15
15	150, 1.0	2.50	.13	.0	.0	121.4777	182.5584	18
16	160, 1.0	2.34	.06	.0	.0	75.3082	137.2211	23
17	170, 1.0	2.17	.02	.0	.0	43.8956	89.7522	30
18	180, 1.0	2.00	.00	.0	.0	25.7450	50.9206	35
19	190, 1.0	1.83	.02	.0	.0	14.2835	24.2757	43
20	200, 1.0	1.66	.06	.0	.0	8.0970	11.1159	56
21	210, 1.0	1.50	.13	.0	.0	4.3169	5.1699	59
22	220, 1.0	1.36	.23	.0	.0	1.9018	2.1138	64
23	230, 1.0	1.23	.34	.0	.0	.6068	.6526	73
24	240, 1.0	1.13	.50	.0	.0	.1861	.1954	78
25	250, 1.0	1.06	.66	.0	.0	.1540	.1557	79
26	260, 1.0	1.02	.83	.0	.0	.2470	.2481	77
27	270, 1.0	1.00	1.00	.0	.0	.5860	.5860	74
28	280, 1.0	1.02	1.17	.0	.0	1.5287	1.5288	66
29	290, 1.0	1.06	1.34	.0	.0	2.5586	2.5591	63
30	300, 1.0	1.13	1.50	.0	.0	1.4843	1.5009	67
31	310, 1.0	1.23	1.64	.0	.0	.2889	.6766	72
32	320, 1.0	1.36	1.77	.0	.0	.6724	4.1203	60
33	330, 1.0	1.50	1.87	.0	.0	2.7716	13.0157	54
34	340, 1.0	1.66	1.94	.0	.0	5.5298	19.0967	47
35	350, 1.0	1.83	1.98	.0	.0	6.7958	20.2298	44
36	360, 1.0	2.00	2.00	.0	.0	6.5862	18.1851	48
37	1	1.00	2.50	.0	.0	.0278	.0355	82
38	2	1.25	2.40	.0	.0	.5378	.9355	69
39	3	1.00	2.25	.0	.0	.0798	.3710	75
40	4	1.25	2.25	.0	.0	1.4043	3.9973	61
41	5	1.20	2.00	.0	.0	.4902	2.9326	62
42	6	1.50	2.00	.0	.0	3.5938	13.9412	53
43	7	.75	1.70	.0	.0	.0028	.0028	83
44	8	1.00	1.60	.0	.0	.2823	.2834	76
45	9	.75	1.50	.0	.0	.0445	.0445	81

46	10	1.00	1.50	.0	.0	.8806	.8810	71
47	11	.95	1.25	.0	.0	.9294	.9298	70
48	12	1.25	1.25	.0	.0	6.8621	6.8813	57
49	13	2.00	1.00	.0	.0	37.3824	48.2852	38
50	14	2.25	1.25	.0	.0	22.3898	68.4412	33
51	15	3.00	1.75	.0	.0	4.8487	13.9722	52
52	16	3.00	1.50	.0	.0	16.1092	48.5339	37
53	17	3.25	1.50	.0	.0	9.8982	31.1943	41
54	18	3.50	1.50	.0	.0	6.0151	19.3362	46
55	19	3.50	1.25	.0	.0	26.2481	73.2038	31
56	20	3.00	1.00	.0	.0	138.1856	238.1136	8
57	21	3.50	1.00	.0	.0	84.3404	189.9808	17
58	22	2.50	.75	.0	.0	66.1938	95.5823	29
59	23	2.75	.75	.0	.0	76.4211	151.0622	22
60	24	3.00	.75	.0	.0	117.2382	236.8791	10
61	25	3.25	.75	.0	.0	146.5359	286.5713	2
62	26	1.25	.50	.0	.0	.7502	.9441	68
63	27	1.50	.50	.0	.0	6.8595	11.3117	55
64	28	1.75	.50	.0	.0	26.4587	38.3919	39
65	29	2.00	.50	.0	.0	57.0000	72.0846	32
66	30	2.25	.50	.0	.0	88.8529	107.6669	27
67	31	2.50	.50	.0	.0	98.6335	122.7653	25
68	32	3.00	.50	.0	.0	102.3749	203.1977	13
69	33	3.50	.50	.0	.0	142.8565	319.5272	1
70	34	.75	.25	.0	.0	.0003	.0003	84
71	35	2.25	.25	.0	.0	79.9440	124.0246	24
72	36	2.75	.25	.0	.0	145.7818	190.5523	16
73	37	.50	.00	.0	.0	.0000	.0000	86
74	38	.75	.00	.0	.0	.0001	.0001	85
75	39	1.00	.00	.0	.0	.1080	.1080	80
76	40	1.25	.00	.0	.0	1.5840	1.5864	65
77	41	1.50	.00	.0	.0	5.1271	5.4662	58
78	42	1.75	.00	.0	.0	10.9955	16.3398	51
79	43	2.00	.00	.0	.0	25.7449	50.9205	36
80	44	2.25	.00	.0	.0	52.8054	107.1267	28
81	45	2.50	.00	.0	.0	106.8710	179.6439	19
82	46	2.75	.00	.0	.0	175.1362	249.5225	7
83	47	3.00	.00	.0	.0	199.1567	268.1394	5
84	48	3.25	.00	.0	.0	183.3502	260.2297	6
85	49	3.50	.00	.0	.0	162.1738	272.4260	4
86	50	3.50	-.25	.0	.0	171.7154	274.8423	3

EXAMPLE FOUR - APPLICATION FOR 30 SOURCES AND 50 RECEPTORS
POLLUTANT TSP IS BEING MODELED USING 3 HRS OF MET DATA
DATA INPUT BY TOM PIERCE 20 FEBRUARY 1980

3-HOUR AVERAGE PART CONTRIBUTION(MICROGRAMS/M**3) FROM SIGNIFICANT POINT SOURCES 79/292 START HOUR: 12

RANK	1	2	3	4	5	6	7	8	9	10	TOTAL SIGNIF POINT	TOTAL ALL POINT SOURCES
SOURCE #	8	27	1	13	14	3	2	4	5	6		
RECEP #												
1	.000	5.296	.000	.000	.000	.049	.101	.000	.000	.000	5.446	18.970
2	.000	6.217	.000	.000	.000	.119	.209	.000	.000	.000	6.545	22.808
3	.000	7.063	.000	.008	.020	.311	.475	.000	.000	.000	7.877	27.126
4	.000	7.764	.000	.431	.493	.811	1.088	.000	.000	.000	10.588	33.547
5	.000	8.263	.000	2.815	3.216	1.961	2.359	.000	.000	.000	18.611	46.287
6	.013	8.539	.000	9.519	10.485	4.198	4.623	.000	.000	.000	37.378	70.084
7	.130	8.638	.001	17.693	18.899	7.750	7.973	.000	.000	.000	61.084	99.296
8	.407	8.614	.008	23.275	24.259	12.198	11.943	.001	.000	.000	80.705	125.124
9	.662	8.493	.058	25.885	26.551	16.453	15.586	.055	.007	.001	93.750	149.472
10	.625	8.299	.299	26.097	26.816	19.497	18.110	.736	.185	.032	100.697	177.503
11	.343	8.078	1.068	23.821	25.225	21.197	19.484	3.470	1.491	.465	104.244	195.006
12	.104	7.839	2.755	16.604	20.350	22.126	20.232	7.335	4.679	2.350	104.375	193.088
13	.016	7.451	5.291	8.065	12.194	22.671	20.700	9.360	7.329	5.071	98.147	168.278
14	.001	6.692	7.834	2.397	4.787	22.768	20.835	9.507	7.873	6.134	88.827	145.274
15	.000	5.463	9.285	.392	1.111	22.375	20.584	8.132	6.875	5.558	79.775	129.047
16	.000	3.943	9.180	.031	.136	21.550	20.008	5.041	4.618	4.498	69.005	111.050
17	.000	2.483	7.843	.001	.007	20.001	18.953	1.439	1.831	2.221	54.819	88.419
18	.000	1.362	5.882	.000	.000	17.409	17.037	.127	.197	.295	42.310	66.891
19	.000	.657	3.851	.000	.000	13.702	14.148	.001	.002	.002	32.364	48.152
20	.000	.285	2.746	.000	.000	9.652	10.723	.000	.000	.000	23.406	31.766
21	.000	.114	1.696	.000	.000	6.134	7.469	.000	.000	.000	15.413	19.389
22	.000	.045	.819	.000	.000	3.610	4.892	.000	.000	.000	9.367	11.119
23	.000	.018	.276	.000	.000	2.052	3.122	.000	.000	.000	5.468	6.083
24	.000	.009	.054	.000	.000	1.189	2.023	.000	.000	.000	3.274	3.444
25	.000	.005	.004	.000	.000	.790	1.382	.000	.000	.000	2.181	2.221
26	.000	.005	.000	.000	.000	.734	1.197	.000	.000	.000	1.935	1.955
27	.000	.006	.000	.000	.000	.739	1.208	.000	.000	.000	1.949	1.976
28	.000	.015	.000	.000	.000	.683	1.110	.000	.000	.000	1.807	1.868
29	.000	.049	.000	.000	.000	.510	.888	.000	.000	.000	1.447	1.645
30	.000	.195	.000	.000	.000	.380	.690	.000	.000	.000	1.265	2.033
31	.000	.655	.000	.000	.000	.256	.481	.000	.000	.000	1.392	3.816
32	.000	1.478	.000	.000	.000	.114	.246	.000	.000	.000	1.835	6.500
33	.000	2.121	.000	.000	.000	.045	.110	.000	.000	.000	2.277	8.347
34	.000	2.720	.000	.000	.000	.024	.060	.000	.000	.000	2.803	9.647
35	.000	3.492	.000	.000	.000	.019	.047	.000	.000	.000	3.558	12.203
36	.000	4.365	.000	.000	.000	.025	.059	.000	.000	.000	4.449	15.407
37	.000	.021	.000	.000	.000	.000	.000	.000	.000	.000	.021	.039
38	.000	.411	.000	.000	.000	.000	.000	.000	.000	.000	.411	1.057
39	.000	.148	.000	.000	.000	.000	.000	.000	.000	.000	.148	.407
40	.000	.740	.000	.000	.000	.000	.000	.000	.000	.000	.740	2.299
41	.000	.883	.000	.000	.000	.000	.002	.000	.000	.000	.885	3.367
42	.000	1.979	.000	.000	.000	.003	.014	.000	.000	.000	1.997	7.297
43	.000	.000	.000	.000	.000	.000	.003	.000	.000	.000	.004	.004
44	.000	.047	.000	.000	.000	.068	.209	.000	.000	.000	.324	.529
45	.000	.000	.000	.000	.000	.004	.036	.000	.000	.000	.039	.040
46	.000	.033	.000	.000	.000	.141	.358	.000	.000	.000	.532	.675

47	.000	.006	.000	.000	.000	.360	.700	.000	.000	.000	1.066	1.091
48	.000	.362	.000	.000	.000	1.513	1.968	.000	.000	.000	3.843	5.226
49	.000	6.668	.005	.000	.011	9.909	10.677	.000	.000	.000	27.270	49.027
50	.000	8.320	.000	1.949	5.390	8.514	9.218	.000	.000	.000	33.392	59.847
51	.000	7.687	.000	.952	1.051	.977	1.214	.000	.000	.000	11.880	35.315
52	.057	8.420	.000	10.685	10.920	8.090	4.452	.000	.000	.000	38.625	72.238
53	.192	8.058	.000	10.488	9.864	3.772	4.034	.000	.000	.000	36.408	72.092
54	.307	7.543	.000	8.696	7.875	3.377	3.566	.000	.000	.000	31.365	67.745
55	1.250	7.745	.008	20.515	19.140	8.321	8.158	.002	.000	.000	65.139	116.833
56	.662	8.493	.058	25.885	26.551	16.853	15.586	.055	.007	.001	93.750	149.472
57	2.169	7.640	.096	25.091	24.111	14.486	13.528	.119	.027	.005	87.271	154.229
58	.000	8.268	.347	5.073	10.170	18.479	17.682	.936	.235	.027	61.216	100.806
59	.038	8.370	.464	18.464	22.558	19.865	18.599	1.241	.358	.065	90.023	157.149
60	.641	8.167	.563	25.792	26.535	20.422	18.833	1.492	.558	.131	103.335	190.466
61	1.817	7.836	.635	26.499	26.031	20.183	18.430	1.813	.669	.190	104.103	203.975
62	.000	.035	.134	.000	.000	2.547	3.717	.000	.000	.000	6.433	7.214
63	.000	.343	.412	.000	.000	7.081	8.335	.000	.000	.000	16.171	20.693
64	.000	1.500	.726	.000	.000	11.832	12.501	.000	.000	.000	26.559	38.240
65	.000	3.674	.998	.000	.001	15.734	15.710	.402	.232	.080	36.830	58.599
66	.000	5.977	1.581	.046	.283	18.766	18.057	2.385	1.613	.839	49.548	83.689
67	.000	7.411	2.154	1.952	4.700	20.795	19.492	3.983	2.785	1.494	64.766	110.209
68	.402	7.736	2.891	21.330	23.326	22.254	20.222	8.183	5.178	2.625	114.137	221.305
69	3.734	7.073	2.954	23.284	22.533	21.521	19.259	7.576	4.697	2.490	115.120	238.663
70	.000	.000	.002	.000	.000	.006	.025	.000	.000	.000	.034	.034
71	.000	4.370	4.915	.014	.085	20.263	19.152	3.393	3.250	2.735	58.176	94.598
72	.008	7.051	7.906	5.271	8.664	23.016	20.945	11.027	9.263	7.284	100.436	166.118
73	.000	.000	.000	.000	.000	.000	.000	.000	.000	.000	.000	.000
74	.000	.000	.012	.000	.000	.003	.013	.000	.000	.000	.028	.028
75	.000	.000	.281	.000	.000	.122	.279	.000	.000	.000	.683	.686
76	.000	.007	1.076	.000	.000	1.248	1.978	.000	.000	.000	4.308	4.631
77	.000	.076	2.255	.000	.000	5.195	6.460	.000	.000	.000	13.985	17.374
78	.000	.420	3.498	.000	.000	11.618	12.409	.000	.000	.000	27.946	40.250
79	.000	1.362	5.882	.000	.000	17.409	17.037	.127	.197	.295	42.310	66.891
80	.000	2.944	9.084	.004	.027	20.846	19.509	2.809	2.930	3.313	61.464	99.053
81	.000	4.684	12.311	.217	.638	22.524	20.619	9.293	8.500	7.324	86.099	135.473
82	.004	5.957	14.938	2.191	4.039	23.285	21.032	14.256	13.194	11.820	110.716	171.960
83	.127	6.514	16.571	7.848	10.648	23.407	20.938	16.989	16.073	14.818	133.934	218.660
84	1.068	6.517	17.147	14.334	16.074	22.994	20.824	17.910	17.168	15.998	149.635	263.795
85	3.652	6.258	16.880	17.446	17.665	22.218	19.637	17.592	16.857	15.530	153.692	282.600
86	3.468	6.177	18.628	16.647	17.024	22.193	19.603	17.807	17.284	16.281	155.112	281.790

EXAMPLE FOUR - APPLICATION FOR 30 SOURCES AND 50 RECEPTORS
POLLUTANT TSP IS BEING MODELED USING 3 HRS OF MET DATA
DATA INPUT BY TOM PIERCE 20 FEBRUARY 1980

3-HOUR AVERAGE PART SUMMARY CONCENTRATION TABLE(MICROGRAMS/M**3) 79/292 START HOUR: 12

RECEPTOR NO.	NAME	EAST COORD	NORTH COORD	RECEPTOR HT ABV GRD (M)	RECEPTOR GRD-LVL ELEV (USER HT UNITS)	TOTAL FROM SIGNIF POINT SOURCES	TOTAL FROM ALL SOURCES	CONCENTRATION RANK
1	10, 1.0	2.17	1.98	.0	.0	5.4861	18.9696	52
2	20, 1.0	2.34	1.94	.0	.0	6.5445	22.8084	49
3	30, 1.0	2.50	1.87	.0	.0	7.8768	27.1260	48
4	40, 1.0	2.64	1.77	.0	.0	10.5876	33.5466	46
5	50, 1.0	2.77	1.64	.0	.0	18.6115	46.2871	42
6	60, 1.0	2.87	1.50	.0	.0	37.3779	70.0837	34
7	70, 1.0	2.94	1.34	.0	.0	61.0837	99.2963	27
8	80, 1.0	2.98	1.17	.0	.0	80.7051	125.1245	22
9	90, 1.0	3.00	1.00	.0	.0	93.7501	149.4724	18
10	100, 1.0	2.98	.83	.0	.0	100.6967	177.5033	11
11	110, 1.0	2.94	.66	.0	.0	104.2442	195.0063	8
12	120, 1.0	2.87	.50	.0	.0	104.3750	193.0878	9
13	130, 1.0	2.77	.36	.0	.0	98.1475	168.2783	13
14	140, 1.0	2.64	.23	.0	.0	88.8269	145.2740	19
15	150, 1.0	2.50	.13	.0	.0	79.7754	129.0466	21
16	160, 1.0	2.34	.06	.0	.0	69.0047	111.0500	24
17	170, 1.0	2.17	.02	.0	.0	54.8186	88.4193	30
18	180, 1.0	2.00	.00	.0	.0	42.3100	66.8913	36
19	190, 1.0	1.83	.02	.0	.0	32.3638	48.1517	41
20	200, 1.0	1.66	.06	.0	.0	23.4057	31.7660	47
21	210, 1.0	1.50	.13	.0	.0	15.4131	19.3886	51
22	220, 1.0	1.36	.23	.0	.0	9.3668	11.1192	56
23	230, 1.0	1.23	.36	.0	.0	5.4680	6.0828	62
24	240, 1.0	1.13	.50	.0	.0	3.2784	3.4438	66
25	250, 1.0	1.06	.66	.0	.0	2.1809	2.2213	69
26	260, 1.0	1.02	.83	.0	.0	1.9389	1.9548	72
27	270, 1.0	1.00	1.00	.0	.0	1.9489	1.9758	71
28	280, 1.0	1.02	1.17	.0	.0	1.8079	1.8677	73
29	290, 1.0	1.06	1.34	.0	.0	1.4471	1.6450	74
30	300, 1.0	1.13	1.50	.0	.0	1.2648	2.0332	70
31	310, 1.0	1.23	1.64	.0	.0	1.3919	3.8160	65
32	320, 1.0	1.36	1.77	.0	.0	1.8345	6.5004	61
33	330, 1.0	1.50	1.87	.0	.0	2.2769	8.3466	58
34	340, 1.0	1.66	1.94	.0	.0	2.8030	9.6466	57
35	350, 1.0	1.83	1.98	.0	.0	3.5580	12.2027	55
36	360, 1.0	2.00	2.00	.0	.0	4.4494	15.4068	54
37	1	1.00	2.50	.0	.0	.0214	.0386	82
38	2	1.25	2.40	.0	.0	.4108	1.0568	76
39	3	1.00	2.25	.0	.0	.1483	.4069	80
40	4	1.25	2.25	.0	.0	.7400	2.2994	68
41	5	1.20	2.00	.0	.0	.8853	3.3674	67
42	6	1.50	2.00	.0	.0	1.9967	7.2974	59
43	7	.75	1.70	.0	.0	.0036	.0041	85
44	8	1.00	1.60	.0	.0	.3284	.5293	79

47	.000	.006	.000	.000	.000	.360	.700	.000	.000	.000	1.066	1.091
48	.000	.362	.000	.000	.000	1.513	1.968	.000	.000	.000	3.883	5.226
49	.000	6.668	.005	.000	.011	9.909	10.677	.000	.000	.000	27.270	49.027
50	.000	8.320	.000	1.989	5.390	8.518	9.218	.000	.000	.000	33.392	59.887
51	.000	7.687	.000	.952	1.051	.977	1.214	.000	.000	.000	11.880	35.315
52	.057	8.420	.000	10.685	10.920	8.090	4.452	.000	.000	.000	38.625	72.238
53	.192	8.058	.000	10.488	9.864	3.772	4.034	.000	.000	.000	36.408	72.092
54	.307	7.583	.000	8.696	7.875	3.377	3.566	.000	.000	.000	31.365	67.785
55	1.250	7.745	.008	20.515	19.140	8.321	8.158	.002	.000	.000	65.139	116.833
56	.662	8.493	.058	25.885	26.551	16.853	15.586	.055	.007	.001	93.750	149.472
57	2.169	7.640	.096	25.091	24.111	14.486	13.528	.119	.027	.005	87.271	154.229
58	.000	8.268	.387	5.073	10.170	18.479	17.682	.936	.235	.027	61.216	100.806
59	.038	8.370	.864	18.464	22.558	19.865	18.599	1.241	.358	.065	90.023	157.149
60	.641	8.167	.563	25.792	26.535	20.822	18.833	1.402	.558	.131	103.335	190.466
61	1.817	7.836	.635	26.499	26.031	20.183	18.430	1.813	.669	.190	104.103	203.975
62	.000	.035	.134	.000	.000	2.547	3.717	.000	.000	.000	6.433	7.214
63	.000	.383	.412	.000	.000	7.081	8.335	.000	.000	.000	16.171	20.693
64	.000	1.500	.726	.000	.000	11.832	12.501	.000	.000	.000	26.559	38.240
65	.000	3.674	.998	.000	.001	15.734	15.710	.402	.232	.080	36.830	58.599
66	.000	5.977	1.581	.046	.283	18.766	18.057	2.385	1.613	.839	49.548	83.689
67	.000	7.411	2.154	1.952	4.700	20.795	19.492	3.983	2.785	1.494	64.766	110.209
68	.402	7.736	2.891	21.330	23.326	22.254	20.222	8.193	5.178	2.625	114.137	221.305
69	3.734	7.073	2.954	23.284	22.533	21.521	19.259	7.576	4.697	2.490	115.120	238.663
70	.000	.000	.002	.000	.000	.006	.024	.000	.000	.000	.034	.034
71	.000	4.370	4.915	.014	.085	20.263	19.152	3.393	3.250	2.735	58.176	94.598
72	.008	7.051	7.906	5.271	8.664	23.016	20.945	11.027	9.263	7.284	100.436	166.118
73	.000	.000	.000	.000	.000	.000	.000	.000	.000	.000	.000	.000
74	.000	.000	.012	.000	.000	.003	.013	.000	.000	.000	.028	.028
75	.000	.000	.281	.000	.000	.122	.279	.000	.000	.000	.683	.686
76	.000	.007	1.076	.000	.000	1.248	1.978	.000	.000	.000	4.308	4.631
77	.000	.076	2.255	.000	.000	5.195	6.460	.000	.000	.000	13.985	17.374
78	.000	.420	3.498	.000	.000	11.618	12.409	.000	.000	.000	27.946	40.250
79	.000	1.362	5.882	.000	.000	17.409	17.037	.127	.197	.295	42.310	66.891
80	.000	2.944	9.084	.004	.027	20.846	19.509	2.809	2.930	3.313	61.464	99.053
81	.000	4.684	12.311	.217	.638	22.524	20.619	9.283	8.500	7.324	86.099	135.473
82	.008	5.957	14.938	2.191	4.039	23.285	21.032	14.256	13.194	11.820	110.716	171.960
83	.127	6.514	16.571	7.888	10.648	23.407	20.938	16.089	16.073	14.818	133.934	218.660
84	1.068	6.517	17.147	14.334	16.074	22.994	20.824	17.910	17.168	15.998	149.635	263.795
85	3.650	6.258	16.880	17.486	17.665	22.218	19.637	17.592	16.857	15.530	153.692	282.600
86	3.468	6.177	18.628	16.647	17.024	22.193	19.603	17.807	17.284	16.281	155.112	281.790

EXAMPLE FOUR - APPLICATION FOR 30 SOURCES AND 50 RECEPTORS
POLLUTANT TSP IS BEING MODELED USING 3 HRS OF MET DATA
DATA INPUT BY TOM PIERCE 20 FEBRUARY 1980

3-HOUR AVERAGE PART SUMMARY CONCENTRATION TABLE(MICROGRAMS/M**3) 79/292 START HOUR: 12

RECEPTOR NO.	NAME	EAST COORD	NORTH COORD	RECEPTOR HT ABV GRD (M)	RECEPTOR GRD-LVL ELEV (USER HT UNITS)	TOTAL FROM SIGNIF POINT SOURCES	TOTAL FROM ALL SOURCES	CONCENTRATION RANK
1	10, 1.0	2.17	1.98	.0	.0	5.4861	18.9696	52
2	20, 1.0	2.34	1.94	.0	.0	6.5445	22.8084	49
3	30, 1.0	2.50	1.87	.0	.0	7.8768	27.1260	48
4	40, 1.0	2.64	1.77	.0	.0	10.5876	33.5466	46
5	50, 1.0	2.77	1.64	.0	.0	18.6115	46.2871	42
6	60, 1.0	2.87	1.50	.0	.0	37.3779	70.0837	34
7	70, 1.0	2.94	1.34	.0	.0	61.0837	99.2963	27
8	80, 1.0	2.98	1.17	.0	.0	80.7051	125.1245	22
9	90, 1.0	3.00	1.00	.0	.0	93.7501	149.4724	18
10	100, 1.0	2.98	.83	.0	.0	100.6967	177.5033	11
11	110, 1.0	2.94	.66	.0	.0	104.2442	195.0063	8
12	120, 1.0	2.87	.50	.0	.0	104.3750	193.0878	9
13	130, 1.0	2.77	.36	.0	.0	98.1475	168.2783	13
14	140, 1.0	2.64	.23	.0	.0	88.8269	145.2740	19
15	150, 1.0	2.50	.13	.0	.0	79.7754	129.0466	21
16	160, 1.0	2.34	.06	.0	.0	69.0047	111.0500	24
17	170, 1.0	2.17	.02	.0	.0	54.8186	88.4193	30
18	180, 1.0	2.00	.00	.0	.0	42.3100	66.8913	36
19	190, 1.0	1.83	.02	.0	.0	32.3638	48.1517	41
20	200, 1.0	1.66	.06	.0	.0	23.4057	31.7660	47
21	210, 1.0	1.50	.13	.0	.0	15.4131	19.3886	51
22	220, 1.0	1.36	.23	.0	.0	9.3668	11.1192	56
23	230, 1.0	1.23	.36	.0	.0	5.4680	6.0828	62
24	240, 1.0	1.13	.50	.0	.0	3.2784	3.4438	66
25	250, 1.0	1.06	.66	.0	.0	2.1809	2.2213	69
26	260, 1.0	1.02	.83	.0	.0	1.9349	1.9548	72
27	270, 1.0	1.00	1.00	.0	.0	1.9489	1.9758	71
28	280, 1.0	1.02	1.17	.0	.0	1.8079	1.8677	73
29	290, 1.0	1.06	1.34	.0	.0	1.4471	1.6450	74
30	300, 1.0	1.13	1.50	.0	.0	1.2648	2.0332	70
31	310, 1.0	1.23	1.64	.0	.0	1.3919	3.8160	65
32	320, 1.0	1.36	1.77	.0	.0	1.8345	6.5004	61
33	330, 1.0	1.50	1.87	.0	.0	2.2769	8.3466	58
34	340, 1.0	1.66	1.94	.0	.0	2.8030	9.6466	57
35	350, 1.0	1.83	1.98	.0	.0	3.5580	12.2027	55
36	360, 1.0	2.00	2.00	.0	.0	4.4494	15.4068	54
37	1	1.00	2.50	.0	.0	.0214	.0386	82
38	2	1.25	2.40	.0	.0	.4108	1.0568	76
39	3	1.00	2.25	.0	.0	.1483	.4069	80
40	4	1.25	2.25	.0	.0	.7400	2.2994	68
41	5	1.20	2.00	.0	.0	.8853	3.3674	67
42	6	1.50	2.00	.0	.0	1.9967	7.2974	59
43	7	.75	1.70	.0	.0	.0036	.0041	85
44	8	1.00	1.60	.0	.0	.3284	.5293	79

Turner, D. B., and Novak, J. H., 1978: User's Guide for RAM. Vol. I. Algorithm Description and Use, Vol. II. Data Preparation and Listings. EPA-600/8-78-016 a and b, U. S. Environmental Protection Agency, Research Triangle Park, NC. 60 and 222 pp.

U. S. Environmental Protection Agency, 1977: User's Manual for Single Source (CRSTER) Model. Monitoring and Data Analysis Division, EPA-450/2-77-013. Research Triangle Park, NC.

U. S. Environmental Protection Agency, 1978: User's Network for Applied Modeling of Air Pollution (UNAMAP) (Version 3). (Computer programs on magnetic tape for eleven air quality simulation models) NTIS PB 277-193, National Technical Information Service, Springfield, VA.

APPENDIX A

POINT SOURCE COMPUTATIONS

Given an east-north coordinate system (R, S), then the upwind distance, x, and the crosswind distance, y, of a point source from a receptor are given by:

$$x = (S_p - S_r) \cos \theta + (R_p - R_r) \sin \theta \qquad \text{(A1)}$$

$$y = (S_p - S_r) \sin \theta - (R_p - R_r) \cos \theta \qquad \text{(A2)}$$

where R_p, S_p are the coordinates of the point source; R_r, S_r are the coordinates of the receptor, and θ is the wind direction (the direction from which the wind blows). The units of x and y will be the same as those of the coordinate system R, S. In order to determine plume dispersion parameters, distances must be in kilometers or meters. A conversion may be required to convert x and y above to the appropriate units.

The various forms of the Gaussian equation given below are based upon the coordinate scheme with the origin at the ground, and x upwind from the receptor, y crosswind, and z vertical. The Gaussian equations for continuous releases have four components: 1) concentrations are proportional to emission rate, 2) the released effluent is diluted by the wind passing the point of release, 3) the effluent is spread horizontally resulting in a Gaussian or normal (bell-shaped) crosswind distribution at downwind distances, and 4) the effluent is spread vertically. This latter component also results in a normal vertical distribution near the source, which at greater downwind distances is modified by eddy reflection at the ground and, if appropriate, by eddy reflection at the mixing height. Equations A3, A4 and A5 are broken into these four components (see below).

The following symbols are defined:

χ_p, concentration, g m^{-3}

Q , emission rate, g s^{-1}

u ,	wind speed, m s^{-1}
σ_y,	standard deviation of plume concentration horizontal distribution (evaluated at the distance x and for appropriate stability), m
σ_z,	standard deviation of plume concentration vertical distribution (evaluated at the distance x and for appropriate stability), m
L ,	mixing height, m
H ,	effective height of emission, m
z ,	receptor height above ground, m
y ,	crosswind distance, m

The contribution to the concentration, χ_p, from a single point source to a receptor is given by one of the three following equations where the expressions g_1, g_2, g_3, are defined below.

Component: (1) (2) (3) (4)

$$\chi_p = Q \cdot \frac{1}{u} \cdot \frac{g_1}{\sqrt{2\pi}\ \sigma_y} \cdot \frac{g_2}{\sqrt{2\pi}\ \sigma_z} \qquad \text{(A3)}$$

$$\chi_p = Q \cdot \frac{1}{u} \cdot \frac{g_1}{\sqrt{2\pi}\ \sigma_y} \cdot \frac{1}{L} \qquad \text{(A4)}$$

$$\chi_p = Q \cdot \frac{1}{u} \cdot \frac{g_1}{\sqrt{2\pi}\ \sigma_y} \cdot \frac{g_3}{\sqrt{2\pi}\ \sigma_z} \qquad \text{(A5)}$$

For stable conditions or unlimited mixing use equation (A3).

For unstable or neutral conditions, where σ_z is equal to or greater than 1.6 L, use equation (A4).

For unstable or neutral conditions where σ_z is less than 1.6 L, use equation (A5), provided that both H and z are less than L.

Sensitivity tests using equation (A5) have indicated that for all H and all z between the ground and the mixing height, the vertical distribution of concentration with height is uniform when σ_z has increased to 1.6 L. Therefore, when σ_z is equal to or greater than 1.6 L for neutral or unstable conditions, use equation (A4). For special cases such as z = 0, equation (A4) may give appropriate concentrations for σ_z much less than 1.6 L. However, the above recommendation covers the more general case. (Note that this recommendation differs from that of Pasquill (1976) and the Stability Workshop (Hanna, 1977), which indicate that σ_z should not be allowed to increase beyond 0.8 L.) For ground level receptors, z = 0, the use of σ_z = 0.8L in equation (A3) reduces to equation (A4). However, the above recommendation allows σ_z to increase beyond the value of L, specifically as large as 1.6 L; it also allows for a smooth transition to a uniform vertical profile for receptors above the ground, $z \neq 0$, and for effective heights of emission approaching the mixing height.

Definitions for expressions g_1, g_2, g_3 follow:

$$g_1 = \exp\left(-0.5\, y^2/\sigma_y^2\right)$$

$$g_2 = \exp\left[-0.5(z-H)^2/\sigma_z^2\right] + \exp\left[-0.5(z+H)^2/\sigma_z^2\right]$$

$$g_3 = \sum_{N=-\infty}^{\infty} \left\{\exp\left[-0.5(zH+2NL)^2/\sigma_z^2\right] + \exp\left[-0.5(z+H+2NL)^2/\sigma_z^2\right]\right\}$$

(This infinite series converges rapidly and evaluation with N varying from -4 to +4 is usually sufficient.)

REFERENCES -- APPENDIX A

Hanna, S. R., G. A. Briggs, J. Deardorff, B. A. Egan, F. A. Gifford and F. Pasquill, 1977: AMS Workshop on Stability Classification Schemes and Sigma Curves - Summary of Recommendations. Bull. Am. Meteorol. Soc., 58: 1305-1309.

Pasquill, F., 1976: Atmospheric dispersion parameters in Gaussian plume modeling. Part II. Possible requirements for change in the Turner Workbook values. EPA-600/4-76-030b. U.S. Environmental Protection Agency, Research Triangle Park, N.C. 44 pp.

APPENDIX B

PLUME RISE FOR POINT SOURCES

The manner in which the methods of Briggs are used to estimate plume rise and effective height of emission are discussed below.

First, actual or estimated wind speed at stack top, u(h), is assumed to be available.

Stack Downwash

In order to consider stack downwash, modification of the physical stack height is performed following Briggs (1973, p. 4). The h' is found from:

$$h' = h + 2 \left[\left(v_s/u(h) \right) - 1.5 \right] d \quad \text{for } v_s < 1.5\ u(h) \qquad \text{(B1)}$$

$$h' = h \text{ for } v_s \geq 1.5\ u(h)$$

where h is physical stack height, v_s is stack gas velocity, m s^{-1}, and d is inside stack-top diameter, m. This h' is used throughout the remainder of the plume height computation. If stack downwash is not considered, h' = h in the following equations.

Buoyancy Flux

For most plume rise situations, the value of the Briggs buoyancy flux parameter, F, in $m^4\ s^{-3}$ is needed. The following equation is equivalent to equation (12), (Briggs, 1975, p. 63):

$$F = \frac{g\ v_s\ d^2\ \Delta T}{4\ T_s} \qquad \text{(B2)}$$

where $\Delta T = T_s - T$, T_s is stack gas temperature, K, and T is ambient air temperature, K.

Unstable or Neutral —— Crossover between Momentum and Buoyancy

For cases with stack gas temperature greater than ambient air temperature, whether the plume rise is dominated by momentum or buoyancy must be determined. The crossover temperature difference $(\Delta T)_c$ is determined for 1) F less than 55, and 2) F greater than or equal to 55. If the difference between stack gas temperature and ambient air temperature, ΔT, exceeds the $(\Delta T)_c$, the plume rise is assumed to be buoyancy dominated; if less than this amount, the plume rise is assumed to be momentum dominated (see below).

For F less than 55, the crossover temperature difference is found by setting Equation (5.2) (Briggs, 1969, p. 59) equal to the combination of Equations (6) and (7) (Briggs, 1971, p. 1031) and solving for ΔT. The result is:

$$(\Delta T)_c = 0.0297\ T_s\ v_s^{1/3} / d^{2/3} \qquad \text{(B3)}$$

For F equal to or greater than 55, the crossover temperature difference is found by setting Equation (5.2) (Briggs, 1969, p. 59) equal to the combination of Equation (6) and (7) (Briggs, 1971, p. 1031) and solving for ΔT. The result is:

$$(\Delta T)_c = 0.00575\ T_s\ v_s^{2/3} / d^{1/3} \qquad \text{(B4)}$$

Unstable or Neutral —— Buoyancy Rise

For situations where ΔT exceeds $(\Delta T)_c$ as determined above, buoyancy is assumed to dominate. The distance to final rise x_f in kilometers, is determined from the equivalent of Equation (7), (Briggs, 1971, p. 1031), and the distance to final rise is assumed to be 3.5 x*, where x* is the distance at which atmospheric turbulence begins to dominate entrainment.

For F less than 55:

$$x_f = 0.049\ F^{5/8} \qquad \text{(B5)}$$

For F equal to or greater than 55:

$$x_f = 0.119\ F^{2/5} \qquad \text{(B6)}$$

The plume height, H, in meters, is determined from the equivalent of the combination of Equations (6) and (7) (Briggs, 1971, p. 1031):

For F less than 55:

$$H = h' + 21.425\ F^{3/4}/u(h) \qquad \text{(B7)}$$

For F equal to or greater than 55:

$$H = h' + 38.71\ F^{3/5}/u(h) \qquad \text{(B8)}$$

Unstable or Neutral —— Momentum Rise

For situations where the stack gas temperature is less than or equal to the ambient air temperature, the assumption is made that the plume rise is dominated by momentum. If ΔT is less than $(\Delta T)_c$ from Equation (B3) or (B4), the assumption is also made that the plume rise is dominated by momentum. The plume height is calculated from Equation (5.2) (Briggs, 1969, p. 59):

$$H = h' + 3d\ v_s/u(h) \qquad \text{(B9)}$$

Briggs (1969, p. 59) suggests that this equation is most applicable when v_s/u is greater than 4. Since momentum rise occurs quite close to the point of release, the distance to final rise is set equal to zero.

Stability Parameter

For stable situations the stability parameter s is calculated from the equation (Briggs, 1971, p. 1031):

$$s = g\frac{\partial\theta/\partial z}{T} \qquad \text{(B10)}$$

As an approximation, for stability class E, or 5, $\partial\theta/\partial z$ is taken as 0.02 K m^{-1}, and for stability class F, or 6, $\partial\theta/\partial z$ is taken as 0.035 K m^{-1}.

Stable —— Crossover between Momentum and Buoyancy

For cases with stack gas temperatures greater than ambient air temperature, determining whether the plume rise is dominated by momentum or buoyancy is necessary. The crossover temperature difference $(\Delta T)_c$ is found by setting Equation (59) (Briggs, 1975, p. 96) equal to Equation (4.28), (Briggs, 1969, p. 59) and solving for ΔT. The result is:

$$(\Delta T)_c = 0.01958\ T\ v_s\ s^{1/2} \qquad \text{(B11)}$$

If the difference between stack gas temperature and ambient air temperature, ΔT, exceeds the $(\Delta T)_c$, the plume rise is assumed to be buoyancy dominated; if less than this amount, the plume rise is assumed to be momentum dominated.

Stable — Buoyancy Rise

For situations where ΔT exceeds $(\Delta)_c$ as determined above, buoyancy is assumed to dominate. The distance to final rise, in kilometers, is determined by the equivalent of a combination of Equations (48) and (59) in Briggs, (1975), p. 96):

$$x_f = 0.00207\ u(h)\ s^{-1/2} \tag{B12}$$

The plume height is determined by the equivalent of Equation (59) (Briggs, 1975, p. 96):

$$H = h' + 2.6 \left(\frac{F}{u(h)s}\right)^{1/3} \tag{B13}$$

The stable buoyancy rise for calm conditions (Briggs, 1975, pp. 81-82) is also evaluated:

$$H = h' + 4\ F^{1/4}\ s^{-3/8} \tag{B14}$$

The lowest value of these two obtained from Equations (B13) and (B14) is taken as the final effective height.

By setting equations (B13) and (B14) equal to each other and solving for u(h), the wind speed can be determined that yields the same plume rise for the wind conditions (B13) as does the calm equation. This rise is:

$$\begin{aligned} u(h) &= \left(\frac{2.6}{4}\right)^3\ F^{1/4}\ s^{1/8} \\ &= 0.2746\ F^{1/4}\ s^{1/8} \end{aligned} \tag{B15}$$

For wind speed less than or equal to this value, use equation (B14) for plume rise; for wind speeds greater than this value, use equation (B13).

Stable —— Momentum Rise

Where the stack gas temperature is less than or equal to the ambient air temperature, the assumption is made that the plume rise is dominated by momentum. If ΔT is less than $(\Delta T)_c$ as determined by (B11), the assumption is also made that the plume rise is dominated by momentum. The plume height is calculated from Equation (4.28) of Briggs (1969), p. 59):

$$H = h' + 1.5 \left(\frac{v_s^2 d^2 T}{4 T_s u(h)} \right)^{1/3} s^{-1/6} \qquad \text{(B16)}$$

The equation for unstable-neutral momentum rise (B9) is also evaluated. The lower result of these two equations is used as the resulting plume height.

All Conditions —— Distance Less Than Distance to Final Rise--(Gradual Rise)

Where gradual rise is to be estimated for unstable, neutral, or stable conditions, if the distance upwind from receptor to source x, in kilometers, is less than the distance to final rise, the equivalent of Equation (2) (Briggs, 1972, p. 1030) is used to determine plume height:

$$H = h' + \frac{160.\ F^{1/3}\ x^{2/3}}{u(h)} \qquad \text{(B17)}$$

This height will be used only for buoyancy dominated conditions; should it exceed the final rise for the appropriate condition, the final rise is substituted instead.

REFERENCES -- APPENDIX B

Briggs, Gary A., 1969: Plume Rise, USAEC Critical Review Series, TID-25075, National Technical Information Service, Springfield, Va. 81 pp.

Briggs, Gary A., 1971: Some recent analyses of plume rise observation. In: Proceedings of the Second International Clean Air Congress, H. M. Englund and W. T. Beery, eds. Academic Press, New York. pp. 1029-1032.

Briggs, Gary A., 1972: Discussion on chimney plumes in neutral and stable surroundings. Atmos. Environ. 6: 507-510.

Briggs, Gary A., 1973: Diffusion Estimation for Small Emissions. Atmos. Turb, and Diff. Lab., Contribution File No. (Draft) 79. Oak Ridge, Tenn. 59 pp.

Briggs, Gary A., 1975: Plume rise predictions. In: Lectures on Air Pollution and Environmental Impact Analysis, Duane A. Haugen, ed. Amer. Meteorol. Soc., Chapter 3 (pp. 59-111). Boston, Mass. 296 pp.

APPENDIX C

SOURCE PROGRAM LISTING

```
00001*  C***  MPTER - VERSION 79365                                          MPT00010
00002*  C                                                                    MPT00020
00003*  C->->->-> SECTION 8 -  GENERAL REMARKS.                              MPT00030
00004*  C                                                                    MPT00040
00005*  C*****************************************************************MPT00050
00006*  C       NOTE: THE CARD INPUT FOR SOURCES DIFFERS SLIGHTLY FROM       MPT00060
00007*  C             PREVIOUS VERSIONS. ENDP SHOULD NOW BE INPUT TO         MPT00070
00008*  C             INDICATE THE LAST OF THE POINT SOURCES.                MPT00080
00009*  C*****************************************************************MPT00090
00010*  C                                                                    MPT00100
00011*  C***  MPTER PROGRAM ABSTRACT.                                        MPT00110
00012*  C          MPTER IS A MULTIPLE POINT SOURCE CODE WITH AN OPTIONAL    MPT00120
00013*  C       TERRAIN ADJUSTMENT FEATURE.  THE ALGORITHM CODE IS PRIMARILY MPT00130
00014*  C       BASED ON THE POINT SOURCE PORTION OF RAMR (RURAL VERSION OF  MPT00140
00015*  C       RAM) WHICH IS BASED ON GAUSSIAN MODELING ASSUMPTIONS.  THREE MPT00150
00016*  C       OTHER FEATURES OF MPTER ARE: 1) TO TURN OFF STACK DOWNWASH,  MPT00160
00017*  C       2) TO TURN OFF GRADUAL PLUME RISE, AND 3) TO INCLUDE INITIAL MPT00170
00018*  C       PLUME SIZE DEPENDENT ON PLUME RISE.                          MPT00180
00019*  C                                                                    MPT00190
00020*  C          EXECUTION OF MPTER IS LIMITED TO A MAXIMUM OF 250 POINT   MPT00200
00021*  C       SOURCES AND 180 RECEPTORS.  SIMULATION IS DONE HOUR-BY-HOUR  MPT00210
00022*  C       AND HOURLY METEOROLOGICAL DATA ARE REQUIRED AS INPUT.  LENGTH MPT00220
00023*  C       OF SIMULATED TIME CAN VARY FROM 1 HOUR TO 1 YEAR.            MPT00230
00024*  C                                                                    MPT00240
00025*  C***  MPTER AUTHORS*                                                 MPT00250
00026*  C       THOMAS E. PIERCE* AND D. BRUCE TURNER*                       MPT00260
00027*  C       ENVIRONMENTAL OPERATIONS BRANCH                              MPT00270
00028*  C       METEOROLOGY AND ASSESSMENT DIVISION, ESRL                    MPT00280
00029*  C       ENVIRONMENTAL PROTECTION AGENCY                              MPT00290
00030*  C                                                                    MPT00300
00031*  C       * ON ASSIGNMENT FROM NATIONAL OCEANIC AND ATMOSPHERIC ADMIN., MPT00310
00032*  C         DEPARTMENT OF COMMERCE.                                    MPT00320
00033*  C                                                                    MPT00330
00034*  C***  MPTER SUPPORTED BY:                                            MPT00340
00035*  C       ENVIRONMENTAL OPERATIONS BRANCH                              MPT00350
00036*  C       MAIL DROP 80, EPA                                            MPT00360
00037*  C       RESRCH TRI PK, NC 27711                                      MPT00370
00038*  C                                                                    MPT00380
00039*  C       PHONE: (919) 541-4564,  FTS 629-4564.                        MPT00390
00040*  C                                                                    MPT00400
00041*  C     ***************************************************           MPT00410
00042*  C     *          IMPORTANT MESSAGE NO. 1 !!!                  *     MPT00420
00043*  C     *       CALCULATIONS SUBMITTED TO SATISFY REGULATORY    *     MPT00430
00044*  C     *  REQUIREMENTS MAY REQUIRE CERTAIN PARAMETER VALUES    *     MPT00440
00045*  C     *  FOR WIND PROFILE POWER-LAW EXPONENTS AND TERRAIN     *     MPT00450
00046*  C     *  ADJUSTMENT FACTORS AND USE OF CERTAIN OPTIONS. CHECK *     MPT00460
00047*  C     *  WITH THE APPROPRIATE EPA REGIONAL OFFICE TO INSURE THAT *  MPT00470
00048*  C     *  ACCEPTABLE PARAMETER VALUES ARE USED IN YOUR RUN.    *     MPT00480
00049*  C     ***************************************************           MPT00490
00050*  C                                                                    MPT00500
```

```
00051*   C ** *  TWO SYSTEMS OF LENGTH AND COORDINATES ARE USED IN MPTER:          MPT00510
00052*   C                                                                          MPT00520
00053*   C              THE FIRST SYSTEM, USER UNITS, IS SELECTED BY THE USER AND   MPT00530
00054*   C         NORMALLY USES THE COORDINATE SYSTEM OF THE EMISSION INVENTORY.   MPT00540
00055*   C         ALL LOCATIONS INPUT BY THE USER (SUCH AS SOURCES AND RECEPTORS)  MPT00550
00056*   C         ARE IN THIS SYSTEM. ALSO AS A CONVENIENCE TO THE USER, ALL       MPT00560
00057*   C         LOCATIONS ON OUTPUT ARE ALSO IN THIS SYSTEM.                     MPT00570
00058*   C                                                                          MPT00580
00059*   C              THE SECOND SYSTEM, X, Y, IS AN UPWIND, CROSSWIND            MPT00590
00060*   C         COORDINATE SYSTEM RELATIVE TO EACH RECEPTOR.  THE X-AXIS IS      MPT00600
00061*   C         DIRECTED UPWIND (SAME AS WIND DIRECTION FOR THE HOUR).  IN       MPT00610
00062*   C         ORDER TO DETERMINE DISPERSION PARAMETER VALUES AND EVALUATE      MPT00620
00063*   C         EQUATIONS FOR CONCENTRATION ESTIMATES, DISTANCES IN THIS         MPT00630
00064*   C         SYSTEM MUST BE IN KILOMETERS. THIS SYSTEM IS INTERNAL AND IS     MPT00640
00065*   C         NOT APPARENT TO THE USER.                                        MPT00650
00066*   C                                                                          MPT00660
00067*   C->->->-> SECTION B -  DATA INPUT LISTS.                                   MPT00670
00068*   C                                                                          MPT00680
00069*   C ** *  CARD VARIABLES AND FORMAT.                                         MPT00690
00070*   C              THE REQUIRED AND OPTIONAL CARD TYPES USED AS INPUT TO       MPT00700
00071*   C         MPTER ARE DESCRIBED BELOW:                                       MPT00710
00072*   C                                                                          MPT00720
00073*   C ** *  CARDS 1 - 3  ALPHANUMERIC DATA FOR TITLES. FORMAT(20A4)            MPT00730
00074*   C                                                                          MPT00740
00075*   C         LINE1 - 80 ALPHANUMERIC CHARACTERS.                              MPT00750
00076*   C         LINE2 - 80 ALPHANUMERIC CHARACTERS.                              MPT00760
00077*   C         LINE3 - 80 ALPHANUMERIC CHARACTERS.                              MPT00770
00078*   C                                                                          MPT00780
00079*   C ** *  CARD 4  CONTROL AND CONSTANTS.  FORMAT(FREE)                       MPT00790
00080*   C                                                                          MPT00800
00081*   C         IDATE(1) -  2-DIGIT YEAR FOR THIS RUN.                           MPT00810
00082*   C         IDATE(2) -  STARTING JULIAN DAY FOR THIS RUN.                    MPT00820
00083*   C         IHSTRT   -  STARTING HOUR FOR THIS RUN.                          MPT00830
00084*   C         NPER     -  NUMBER OF AVERAGING PERIODS TO BE RUN.               MPT00840
00085*   C         NAVG     -  NUMBER OF HOURS IN AN AVERAGING PERIOD.              MPT00850
00086*   C         IPOL     -  POLLUTANT INDICATOR: IS 3 FOR SO2, 8 FOR SUSPENDED   MPT00860
00087*   C                      PARTICULATE.                                        MPT00870
00088*   C         NSIGP    -  NUMBER OF SOURCES FROM WHICH CONC. CONTRIBUTIONS     MPT00880
00089*   C                      ARE DESIRED (MAX = 25).                             MPT00890
00090*   C         NAVS     -  ADDITIONAL AVERAGING TIME FOR HIGH-FIVE TABLE;       MPT00900
00091*   C                      MOST LIKELY EQUAL TO 2, 4, 6, OR 12.                MPT00910
00092*   C         CONONE   -  MULTIPLIER TO CONVERT USER UNITS TO KILOMETERS.      MPT00920
00093*   C                        EXAMPLE MULTIPLIERS:                              MPT00930
00094*   C                          FEET TO KM     3.048E-04                       MPT00940
00095*   C                          MILES TO KM    1.609344                        MPT00950
00096*   C                          METERS TO KM   1.0E-03                         MPT00960
00097*   C         CELM     -  MULTIPLIER TO CONVERT USER HEIGHT UNITS TO METERS.   MPT00970
00098*   C                        EXAMPLE MULTIPLIER:                               MPT00980
00099*   C                          FEET TO METERS  0.3048                          MPT00990
00100*   C         HAFL     -  POLLUTANT HALF-LIFE, SECONDS. AN ENTRY OF ZERO WILL  MPT01000
```

```
C                    CAUSE SKIPPING OF POLLUTANT LOSS CALCULATIONS.
C
C      ***********************************************************
C      *              IMPORTANT MESSAGE NO. 2 !!!                *
C      *        CALCULATIONS SUBMITTED TO SATISFY REGULATORY     *
C      *  REQUIREMENTS MAY REQUIRE THAT CERTAIN OPTIONS BE USED  *
C      *  CHECK WITH THE APPROPRIATE EPA REGIONAL OFFICE TO      *
C      *  INSURE THAT ACCEPTABLE OPTIONS ARE USED IN YOUR RUN.   *
C      ***********************************************************
C
C        ****************************************
C        *      THE USER IS REFERRED TO THE USERS GUIDE FOR   *
C        *  MORE DETAILED INFORMATION ON OPTIONS. ESPECIALLY  *
C        *  IMPORTANT IS AN UNDERSTANDING OF PRINTED OUTPUT   *
C        *  AND USE OF OPTIONS 9 THROUGH 19 TO DELETE UNNEEDED*
C        *  INFORMATION. MPTER IS CAPABLE OF GENERATING A     *
C        *  LARGE QUANTITY OF PRINTED INFORMATION UNLESS SOME *
C        *  OF THESE OPTIONS TO DELETE OUTPUT ARE USED        *
C        *  LIBERALLY.                                        *
C        ****************************************
C
C
C*** CARD 5. OPTIONS. FORMAT(FREE)
C
C        1 = EMPLOY OPTION;  0 = DON'T USE OPTION.
C
C      TECHNICAL OPTIONS:
C        IOPT(1)  -  USE TERRAIN ADJUSTMENTS.
C        IOPT(2)  -  NO STACK DOWNWASH.
C        IOPT(3)  -  NO GRADUAL PLUME RISE.
C        IOPT(4)  -  USE BUOYANCY INDUCED DISPERSION.
C
C      INPUT OPTIONS:
C        IOPT(5)  -  MET. DATA IS ON CARDS.
C        IOPT(6)  -  READ HOURLY EMISSIONS.
C        IOPT(7)  -  SPECIFY SIGNIFICANT SOURCES.
C        IOPT(8)  -  INPUT RADIAL DISTANCES AND GENERATE POLAR
C                     COORDINATE RECEPTORS.
C
C      PRINTED OUTPUT OPTIONS:
C        IOPT(9)  -  DELETE EMISSIONS WITH HEIGHT TABLE.
C        IOPT(10) -  DELETE RESULTANT MET. DATA SUMMARY FOR AVG. PERIOD
C        IOPT(11) -  DELETE HOURLY CONTRIBUTIONS.
C        IOPT(12) -  DELETE MET. DATA ON HOURLY CONTRIBUTIONS.
C        IOPT(13) -  DELETE FINAL PLUME HEIGHT AND DISTANCE TO FINAL
C                     RISE ON HOURLY CONTRIBUTIONS.
C        IOPT(14) -  DELETE HOURLY SUMMARY.
C        IOPT(15) -  DELETE MET. DATA ON HOURLY SUMMARY.
C        IOPT(16) -  DELETE FINAL PLUME HEIGHT AND DISTANCE TO FINAL
C                     RISE ON HOURLY SUMMARY.
```

```
00151*   C      IOPT(17) -  DELETE AVERAGING-PERIOD CONTRIBUTIONS.                MPT01510
00152*   C      IOPT(18) -  DELETE AVERAGING-PERIOD SUMMARY.                      MPT01520
00153*   C      IOPT(19) -  DELETE AVERAGE CONCENTRATIONS AND HIGH-FIVE TABLE.    MPT01530
00154*   C                                                                        MPT01540
00155*   C    OTHER CONTROL AND OUTPUT OPTIONS:                                   MPT01550
00156*   C      IOPT(20) -  RUN IS PART OF A SEGMENTED LONG RUN.                  MPT01560
00157*   C      IOPT(21) -  WRITE PARTIAL CONCENTRATIONS TO DISK OR TAPE.         MPT01570
00158*   C      IOPT(22) -  WRITE HOURLY CONCENTRATIONS TO DISK OR TAPE.          MPT01580
00159*   C      IOPT(23) -  WRITE AVERAGING-PERIOD CONCS TO DISK OR TAPE.         MPT01590
00160*   C      IOPT(24) -  PUNCH AVERAGING-PERIOD CONCENTRATIONS ON CARDS.       MPT01600
00161*   C                                                                        MPT01610
00162*   C    ***********************************************************         MPT01620
00163*   C    *            IMPORTANT MESSAGE NO. 3 ***                     *     MPT01630
00164*   C    *       CALCULATIONS SUBMITTED TO SATISFY REGULATORY         *     MPT01640
00165*   C    *  REQUIREMENTS MAY REQUIRE THAT CERTAIN PARAMETER VALUES    *     MPT01650
00166*   C    *  BE USED FOR THE VARIABLES ON THIS CARD.  CHECK WITH THE   *     MPT01660
00167*   C    *  APPROPRIATE EPA REGIONAL OFFICE TO INSURE THAT            *     MPT01670
00168*   C    *  ACCEPTABLE PARAMETER VALUES ARE USED IN YOUR RUN!         *     MPT01680
00169*   C    ***********************************************************         MPT01690
00170*   C                                                                        MPT01700
00171*   C***  CARD 6.  WIND AND TERRAIN. FORMAT(FREE)                            MPT01710
00172*   C                                                                        MPT01720
00173*   C      HANE      -  ANEMOMETER HEIGHT (METERS)                           MPT01730
00174*   C      PL(I),I=1,6 -  WIND SPEED POWER LAW PROFILE EXPONENTS FOR EACH    MPT01740
00175*   C                     STABILITY.                                         MPT01750
00176*   C      CONTER(I),I=1,6 -  TERRAIN ADJUSTMENT FACTORS FOR EACH            MPT01760
00177*   C                         STABILITY.                                     MPT01770
00178*   C                                                                        MPT01780
00179*   C***  CARD TYPE 7.  POINT SOURCE CARD.  FORMAT(3A4,8F8.2,F4.0)           MPT01790
00180*   C                                                                        MPT01800
00181*   C    (UP TO 250 POINT SOURCE CARDS ARE ALLOWED.)                         MPT01810
00182*   C      PNAME(I,NPT) I=1,3 -  12 CHARACTER SOURCE IDENTIFICATION.         MPT01820
00183*   C      SOURCE(1,NPT)  -  EAST COORDINATE OF POINT SOURCE (USER UNITS)    MPT01830
00184*   C      SOURCE(2,NPT)  -  NORTH COORDINATE OF POINT SOURCE (USER UNITS)   MPT01840
00185*   C      SOURCE(3,NPT)  -  SULFUR DIOXIDE EMISSION RATE (G/SEC).           MPT01850
00186*   C      SOURCE(4,NPT)  -  PARTICULATE EMISSION RATE (G/SEC).              MPT01860
00187*   C      SOURCE(5,NPT)  -  PHYSICAL STACK HEIGHT (METERS).                 MPT01870
00188*   C      SOURCE(6,NPT)  -  STACK GAS TEMPERATURE (KELVIN).                 MPT01880
00189*   C      SOURCE(7,NPT)  -  STACK INSIDE DIAMETER (METERS).                 MPT01890
00190*   C      SOURCE(8,NPT)  -  STACK GAS EXIT VELOCITY (M/SEC).                MPT01900
00191*   C      ELP(NPT)       -  SOURCE GROUND-LEVEL ELEVATION (USER HT UNITS)   MPT01910
00192*   C                                                                        MPT01920
00193*   C       CARD WITH 'ENDP' IN COLS 1-4 IS USED TO SIGNIFY THE              MPT01930
00194*   C        END OF THE POINT SOURCES.                                       MPT01940
00195*   C                                                                        MPT01950
00196*   C***  CARD TYPE 8.  SPECIFIED SIGNIFICANT SOURCES.  FORMAT(26I3)         MPT01960
00197*   C                                                                        MPT01970
00198*   C    (USED IF OPTION 7 = 1)                                              MPT01980
00199*   C      INPT           -  NUMBER OF USER SPECIFIED SIGNIFICANT SOURCES.  MPT01990
00200*   C      MPS(I),I=1,NPT -  POINT SOURCE NUMBERS USER WANTS CONSIDERED     MPT02000
```

```
C                                   SIGNIFICANT.                                    MPT02010
C                                                                                   MPT02020
C**   CARD TYPE 9. MET. DATA IDENTIFIERS.  FORMAT(FREE)                             MPT02030
C                                                                                   MPT02040
C       (USED IF OPTION 5 = 0)                                                      MPT02050
C         ISFCD     -  SFC MET STATION IDENTIFIER      (5 DIGITS)                   MPT02060
C         ISFCYR    -  YEAR OF SFC MET DATA            (2 DIGITS)                   MPT02070
C         IMXD      -  UPPER-AIR STATION IDENTIFIER    (5 DIGITS)                   MPT02080
C         IMXYR     -  YEAR OF MIXING HEIGHT DATA      (2 DIGITS)                   MPT02090
C                                                                                   MPT02100
C**   CARD TYPE 10.  POLAR COORDINATE RECEPTORS.  FORMAT(FREE)                      MPT02110
C                                                                                   MPT02120
C       (USED IF OPTION 8 = 1)                                                      MPT02130
C         RADIL(I),I= 1,5 -  ONE TO FIVE RADIAL DISTANCES (REST OF FIVE             MPT02140
C                            ARE ZEROS) EACH OF WHICH GENERATES 36                  MPT02150
C                            RECEPTORS AROUND POINT CENTX, CENTY ON                 MPT02160
C                            AZIMUTHS 10 TO 360 DEGREES. (USER UNITS)               MPT02170
C                            (USER UNITS)                                           MPT02180
C         CENTX     -  EAST COORDINATE ABOUT WHICH RADIALS ARE CENTERED.            MPT02190
C         CENTY     -  NORTH COORDINATE ABOUT WHICH RADIALS ARE CENTERED.           MPT02200
C                        (USER UNITS)                                               MPT02210
C                                                                                   MPT02220
C**   CARD TYPE 11.  POLAR COORDINATE RECEPTOR ELEVATIONS.                          MPT02230
C                                                                                   MPT02240
C       FORMAT(I2,8X,5F10.0).  (USED IF OPTIONS 1 AND 8 ARE BOTH 1)                 MPT02250
C         IDUM      -  AZIMUTH INDICATOR (1 TO 36)                                  MPT02260
C         ELRDUM(I), I=1,5  -  RECEPTOR ELEVATIONS FOR THIS AZIMUTH FOR             MPT02270
C                              UP TO FIVE DISTANCES (USER HEIGHT UNITS).            MPT02280
C                                                                                   MPT02290
C**   CARD TYPE 12.  RECEPTOR.  FORMAT(2A4,2F10.3,2F10.0)                           MPT02300
C                                                                                   MPT02310
C       (UP TO 180 RECEPTORS MAY BE GENERATED INCLUDING POLAR COORDINATE            MPT02320
C         ONES IF OPTION 8 = 1.)                                                    MPT02330
C         RNAME(I),I=1,2  -  8 DIGIT ALPHANUMERIC STATION IDENTIFICATION.           MPT02340
C         RREC      -  EAST COORDINATE OF RECEPTOR (USER UNITS)                     MPT02350
C         SREC      -  NORTH COORDINATE OF RECEPTOR (USER UNITS)                    MPT02360
C         ZR        -  RECEPTOR HEIGHT ABOVE LOCAL GROUND-LEVEL (METERS)            MPT02370
C         ELR       -  RECEPTOR GROUND-LEVEL ELEVATION (USER HT UNITS)              MPT02380
C                                                                                   MPT02390
C         CARD WITH 'ENDR' IN COLS 1-4 IS USED TO SIGNIFY THE END OF                MPT02400
C           THE RECEPTOR CARDS.                                                     MPT02410
C                                                                                   MPT02420
C**   CARD TYPE 13.  SEGMENTED RUN. FORMAT(FREE)                                    MPT02430
C                                                                                   MPT02440
C       (USED IF OPTION 20=1)                                                       MPT02450
C         IDAY      -  NUMBER OF DAYS PREVIOUSLY PROCESSED.                         MPT02460
C         LDRUN     -  LAST DAY TO BE PROCESSED IN THIS RUN.                        MPT02470
C                                                                                   MPT02480
C**   CARD TYPE 14.  METEOROLOGY.  FORMAT(FREE)                                     MPT02490
C                                                                                   MPT02500
```

```
00251*          C       (ONE CARD FOR EACH HOUR OF THE SIMULATION.)                     MPT02510
00252*          C       (USED IF OPTION 5 = 1)                                          MPT02520
00253*          C        JYR      -  YEAR OF MET DATA. (2 DIGITS)                       MPT02530
00254*          C        DAY1     -  JULIAN DAY OF MET DATA.                            MPT02540
00255*          C        JHR      -  HOUR OF MET DATA.                                  MPT02550
00256*          C        IKST     -  STABILITY CLASS FOR THIS HOUR.                     MPT02560
00257*          C        QU       -  WIND SPEED FOR THIS HOUR (M/SEC).                  MPT02570
00258*          C        QTEMP    -  AMBIENT AIR TEMPERATURE FOR THIS HOUR (KELVIN).    MPT02580
00259*          C        QTHETA   -  WIND DIRECTION FOR THIS HOUR (DEGREES AZIMUTH FROM MPT02590
00260*          C                     WHICH THE WIND BLOWS).                            MPT02600
00261*          C        QHL      -  MIXING HEIGHT FOR THIS HOUR (METERS).              MPT02610
00262*          C                                                                       MPT02620
00263*          C-> -> -> -> SECTION C -  COMMON, DIMENSION, AND DATA STATEMENTS.       MPT02630
00264*          C                                                                       MPT02640
00265*          C        /EXPOS/  BETWEEN MAIN PROGRAM AND BLOCK DATA                   MPT02650
00266*     1          COMMON /EXPOS/ PXUCOF(6,9),PXUFXP(6,9),HC1(10)                   MPT02660
00267*          C        /MPOR/ BETWEEN MAIN, PTR, OUTHR, AND RCP                       MPT02670
00268*     2          COMMON /MPOR/ IOPT(25)                                           MPT02680
00269*          C        /MPO/ BETWEEN MAIN, PTR, AND OUTHR                             MPT02690
00270*     3          COMMON /MPO/ NRECEP,NAVG,NRELH,NPT,IDATE(2),RREC(180),SREC(180),ZRMPT02700
00271*               1(180),ELR(180),PHCHI(180),PHSIGS(180,26),HSAV(250),DSAV(250),PCHI (MPT02710
00272*               2180),PSIGS(180,26),IPOL                                           MPT02720
00273*          C        /MPR/  BETWEEN MAIN, PTR, AND RCP                              MPT02730
00274*     4          COMMON /MPR/ UPL,Z,H,HL,X,Y,KST,DELH,SY,SZ,RC                    MPT02740
00275*          C        /MP/  BETWEEN MAIN PROGRAM AND PTR                             MPT02750
00276*     5          COMMON /MP/ SOURCE(9,250),CONTWO,PSAV(250),IPSIGS(250),U,TEMP,SINTMPT02760
00277*               1,COST,PL(6),ELP(250),ELHN,HANE,TLOS,CELM,CTER                   MPT02770
00278*          C        /MO/  BETWEEN MAIN PROGRAM AND OUTHR                           MPT02780
00279*     6          COMMON /MO/ QTHETA(24),QU(24),IKST(24),QHL(24),QTEMP(24),MPS(25),MMPT02790
00280*               1SIGP,IO,LINE1(20),LINE2(20),LINE3(20),RNAME(2,180),IRANK(180),STARMPT02800
00281*               2(5,180)                                                           MPT02810
00282*          C        /MR/  BETWEEN MAIN PROGRAM AND RANK                            MPT02820
00283*     7          COMMON /MR/ HMAXA(5,180,5),NDAY(5,180,5),IHR(5,180,5),CONC(180,5),MPT02830
00284*               1JDAY,NR                                                           MPT02840
00285*          C                                                                       MPT02850
00286*     8          DIMENSION PNAME(3,250), IFREQ(7), DUMR(24), HLH(2,24), IMPS(25), TMPT02860
00287*               1ITLE(2), TABLE(2,21), CONTER(6), RADIL(5), ANAME(36)              MPT02870
00288*     9          DIMENSION SUM(180), ELRDUM(5), NTIME(5), ATIME(5)                  MPT02880
00289*          C                                                                       MPT02890
00290*    10          DATA IFREQ /7*0/ ,BLNK /' '/                                       MPT02900
00291*    11          DATA TITLE /'SO2 ','PART'/                                         MPT02910
00292*    12          DATA ENDP /'ENDP'/ ,ENDR /'ENDR'/                                  MPT02920
00293*    13          DATA MAXP /250/ ,STR /'*'/ ,STAR /900*' '/                         MPT02930
00294*          C        MAXP EQUALS SECOND DIMENSION OF THE ARRAY NAMED SOURCE.        MPT02940
00295*    14          DATA ANAME /' 10','  20','  30','  40','  50','  60','  70','  80',MPT02950
00296*               1' 90','100','110','120','130','140','150','160','170','180',MPT02960
00297*               2180,' ','190','200','210','220','230','240','250','260','270',MPT02970
00298*               3','280',' ','290','300',' ','310','320',' ','330','340',' ','350','360',' '/MPT02980
00299*               4                                                                  MPT02990
00300*          C                                                                       MPT03000
```

```
00301*          15        DATA NTIME /1,3,8,24,0/ ,ATIME /1,,3,,8,,24,,0,/          MPT03010
00302*                C                                                              MPT03020
00303*                C->->->->SECTION D - FLOW DIAGRAM                              MPT03030
00304*                C                                                              MPT03040
00305*                C       RELATION OF SUBROUTINES IN MPTER                       MPT03050
00306*                C                                                              MPT03060
00307*                C                    MPTER                                     MPT03070
00308*                C                      !                                       MPT03080
00309*                C                      ! * READ INPUT DATA                     MPT03090
00310*                C              ------! - LOOP FOR CALENDAR DAYS                MPT03100
00311*                C              !       !                                       MPT03110
00312*                C              !  ----! - LOOP FOR AVERAGING TIME              MPT03120
00313*                C              !  !    !                                       MPT03130
00314*                C              !  !    ! * READ MET DATA                       MPT03140
00315*                C              !  !    ! * ANGARC                              MPT03150
00316*                C              !  !    !                                       MPT03160
00317*                C              !  !  --! - LOOP ON HOURS                       MPT03170
00318*                C              !  !  ! !                                       MPT03180
00319*                C              !  !  ! ! * * * * * PTR                         MPT03190
00320*                C              !  !  ! !             !                         MPT03200
00321*                C              !  !  ! !         ----- - LOOP ON RECEPTORS     MPT03210
00322*                C              !  !  ! !       !     !                         MPT03220
00323*                C              !  !  ! !       !  --- - LOOP ON SOURCES       MPT03230
00324*                C              !  !  ! !       !  ! !                         MPT03240
00325*                C              !  !  ! !       !  ! ! * * RCP                 MPT03250
00326*                C              !  !  ! !       !  ! !      !                  MPT03260
00327*                C              !  !  ! !       !  ! !      **PGY7             MPT03270
00328*                C              !  !  ! !       !  ! !                         MPT03280
00329*                C              !  !  ! !       !  --*                         MPT03290
00330*                C              !  !  ! !       ----*                         MPT03300
00331*                C              !  !  ! !                                       MPT03310
00332*                C              !  !  ! ! * RANK                               MPT03320
00333*                C              !  !  ! !                                       MPT03330
00334*                C              !  !  ! ! * OUTHR                               MPT03340
00335*                C              !  !  ! !                                       MPT03350
00336*                C              !  !  --*                                       MPT03360
00337*                C              !  !    !                                       MPT03370
00338*                C              !  !    ! * OUTAVG (ENTRY POINT IN OUTHR)       MPT03380
00339*                C              !  !    !                                       MPT03390
00340*                C              !  ----*                                       MPT03400
00341*                C              !       !                                       MPT03410
00342*                C              -------*                                       MPT03420
00343*                C                      !                                       MPT03430
00344*                C                    EXIT                                      MPT03440
00345*                C                                                              MPT03450
00346*                C->->->->SECTION E - RUN SET-UP AND READ FIRST 4 INPUT CARDS.   MPT03460
00347*                C                                                              MPT03470
00348*                C        INITIALIZATIONS.............                          MPT03480
00349*                C        THE FOLLOWING 18 STATEMENTS MAY BE DELETED FOR USE ON  MPT03490
00350*                C        COMPUTERS THAT ZERO CORE LOCATIONS USED BY A PROBLEM   MPT03500
```

```
00351*                C        PRIOR TO EXECUTION.                                    MPT03510
00352*        16            NRECEP=0                                                  MPT03520
00353*        17            NP=0                                                      MPT03530
00354*        18            NHR=0                                                     MPT03540
00355*        19            NP3=0                                                     MPT03550
00356*        20            NP8=0                                                     MPT03560
00357*        21            NP24=0                                                    MPT03570
00358*        22            NPX=0                                                     MPT03580
00359*        23            DO 10 I=1,21                                              MPT03590
00360*        24            TABLE(1,I)=0.                                             MPT03600
00361*        25      10    TABLE(2,I)=0.                                             MPT03610
00362*        26            DO 40 I=1,180                                             MPT03620
00363*        27            SUM(I)=0.                                                 MPT03630
00364*        28            DO 30 J=1,5                                               MPT03640
00365*        29            CONC(I,J)=0.                                              MPT03650
00366*        30            DO 20 K=1,5                                               MPT03660
00367*        31      20    HMAXA(J,I,K)=0.                                           MPT03670
00368*        32      30    CONTINUE                                                  MPT03680
00369*        33      40    CONTINUE                                                  MPT03690
00370*                C        I/O DEVICE INITIALIZATIONS                             MPT03700
00371*        34            IN=5                                                      MPT03710
00372*        35            IO=6                                                      MPT03720
00373*                C        UNIT 11 - DISK INPUT OF MET DATA--USED WHEN IOPT(5)=1. MPT03730
00374*                C        UNIT 10 - DISK OUPUT OF PARTIAL CONCENTRATIONS         MPT03740
00375*                C         AT EACH RECEPTOR--USED WHEN IOPT(21) = 1.             MPT03750
00376*                C        UNIT 12 TAPE/DISK OUTPUT OF HRLY CONCENTRATIONS- IF IOPT(22)=1. MPT03760
00377*                C        UNIT 13 TAPE/DISK OUTPUT OF CONCENTRATIONS FOR AVERAGING PERIOD MPT03770
00378*                C           USED IF IOPT(23) = 1.                              MPT03780
00379*                C        UNIT 14 TAPE/DISK STORAGE FOR SUMMARY INFO, USED IF IOPT(20)=1 MPT03790
00380*                C        UNIT 15 - TAPE/DISK INPUT OF HOURLY POINT SOURCE EMISSIONS MPT03800
00381*                C          - USED IF IOPT(6) = 1.                              MPT03810
00382*                C                                                              MPT03820
00383*                C        READ CARDS 1-3  (SEE DESCRIPTION, SECTION B).         MPT03830
00384*                C                                                              MPT03840
00385*        36            READ (IN,*180) LINE1,LINE2,LINE3                          MPT03850
00386*        37            WRITE (IO,1400) LINE1,LINE2,LINE3                         MPT03860
00387*                C                                                              MPT03870
00388*                C        READ CARD TYPE 4  (SEE DESCRIPTION, SECTION B).       MPT03880
00389*                C                                                              MPT03890
00390*        38            READ (IN, *  ) IDATE(1),IDATE(2),IHSTRT,NPER,NAVG,IPOL,NSIGP,NAVS,MPT03900
00391*                     1CONONE,CELM,HAFL                                          MPT03910
00392*                C        THE ABOVE FORMAT IS UNIVACS FREE FIELD INPUT.         MPT03920
00393*                C        VARIABLES MUST BE SEPARATED BY COMMAS.                MPT03930
00394*                C        THIS IS SIMILAR TO IBM'S LIST DIRECTED I O.           MPT03940
00395*        39            IF (NSIGP.LE.25) GO TO 50                                 MPT03950
00396*        40            WRITE (IO,1250) NSIGP                                     MPT03960
00397*        41            STOP                                                      MPT03970
00398*        42      50    IP=IPOL-2                                                 MPT03980
00399*        43            CONTWO=CONONE                                             MPT03990
00400*                C                                                              MPT04000
```

```
00401*                C        ***********************************************  MPT04010
00402*                C        *     SEE IMPORTANT  MESSAGE                  *  MPT04020
00403*                C        *          NUMBER 2 ABOVE!                    *  MPT04030
00404*                C        ***********************************************  MPT04040
00405*                C                                                          MPT04050
00406*                C        READ CARD TYPE 5  (SEE DESCRIPTION, SECTION B).   MPT04060
00407*                C                                                          MPT04070
00408*          44          READ (IN, *  ) (IOPT(I),I=1,24)                     MPT04080
00409*                C           WRITE GENERAL INPUT INFORMATION                MPT04090
00410*          45          WRITE (IO,1410) TITLE(IP),NPER,NAVG,IHSTRT,IDATE(2),IDATE(1),CONTWMPT04100
00411*                     10,NSIGP                                             MPT04110
00412*          46          DAY1A=IDATE(2)                                      MPT04120
00413*          47          HR1=IHSTRT                                          MPT04130
00414*          48          IF (HAFL.GT.0.0) GO TO 60                           MPT04140
00415*          49          WRITE (IO,1420)                                     MPT04150
00416*          50          GO TO 70                                            MPT04160
00417*          51     60   WRITE (IO,1430) HAFL                                MPT04170
00418*          52          TLOS=693./HAFL                                      MPT04180
00419*          53     70   IF (IOPT(19).EQ.1) GO TO 80                         MPT04190
00420*          54          NAVT=5                                              MPT04200
00421*          55          IF (NAV5.EQ.1.OR.NAV5.EQ.3.OR.NAV5.EQ.8.OR.NAV5.EQ.24.OR.NAV5.EQ.0MPT04210
00422*                     1) NAVT=4                                            MPT04220
00423*          56          NTIME(5)=NAV5                                       MPT04230
00424*          57          ATIME(5)=NAV5                                       MPT04240
00425*          58          WRITE (IO,1440) NAVT                                MPT04250
00426*          59     80   IF (IOPT(1).EQ.0) GO TO 90                          MPT04260
00427*          60          WRITE (IO,1450) CELM                                MPT04270
00428*          61          ELHN=99999.                                         MPT04280
00429*          62          ELOW=99999.                                         MPT04290
00430*          63     90   IF (NSIGP.GT.0) GO TO 100                           MPT04300
00431*          64          IOPT(11)=1                                          MPT04310
00432*          65          IOPT(17)=1                                          MPT04320
00433*          66    100   WRITE (IO,1460) (I,IOPT(I),I=1,13)                  MPT04330
00434*          67          WRITE (IO,1470) (I,IOPT(I),I=14,24)                 MPT04340
00435*                C                                                          MPT04350
00436*                C        ***********************************************  MPT04360
00437*                C        *    SEE IMPORTANT MESSAGE NO. 3 ABOVE          *  MPT04370
00438*                C        ***********************************************  MPT04380
00439*                C                                                          MPT04390
00440*                C        READ CARD TYPE 6 (SEE DESCRIPTION, SECTION P).    MPT04400
00441*                C                                                          MPT04410
00442*          68          READ (IN, *  ) HANE,PL,CONTER                       MPT04420
00443*          69          IF (IOPT(1).EQ.1) GO TO 110                         MPT04430
00444*          70          WRITE (IO,1480) HANE,PL                             MPT04440
00445*          71          GO TO 140                                           MPT04450
00446*          72    110   WRITE (IO,1490) HANE,PL,CONTER                      MPT04460
00447*          73          DO 120 I=1,6                                        MPT04470
00448*          74          IF (CONTER(I).LT.0..OR.CONTER(I).GT.1.) GO TO 130   MPT04480
00449*          75    120   CONTINUE                                            MPT04490
00450*          76          GO TO 140                                           MPT04500
```

```
00451*        77    130   WRITE (IO,1260)                                          MPT04510
00452*        78          STOP                                                      MPT04520
00453*              C                                                               MPT04530
00454*              C        MUCH OF THE FOLLOWING PROGRAM SECTION IS BASED UPON    MPT04540
00455*              C        RAMQ IN THE RAM SYSTEM. THIS SECTION IS RESPONSIBLE    MPT04550
00456*              C        FOR MAKING THE NECESSARY DATA CONVERSIONS ON THE RAW   MPT04560
00457*              C        EMISSIONS DATA IN ORDER TO ESTABLISH A STANDARD        MPT04570
00458*              C        DATA BANK WHICH WILL BE ACCEPTABLE. A CONVERSION FACTOR MPT04580
00459*              C        FROM USER UNITS TO KILOMETERS IS APPLIED WHEN NECESSARY. MPT04590
00460*              C                                                               MPT04600
00461*              C->->->->SECTION E - INPUT AND PROCESS EMISSION INFORMATION.    MPT04610
00462*              C                                                               MPT04620
00463*        79    140   WRITE (IO,1500)                                          MPT04630
00464*        80          NPT=0                                                     MPT04640
00465*              C        BEGIN LOOP TO READ THE POINT SOURCE INFORMATION        MPT04650
00466*        81    150   NPT=NPT+1                                                MPT04660
00467*        82          IF (NPT.LE.MAXP) GO TO 160                                MPT04670
00468*        83          READ (IN,1200) DUM                                        MPT04680
00469*        84          IF (DUM.EQ.ENDP) GO TO 230                                MPT04690
00470*        85          WRITE (IO,1270) MAXP                                      MPT04700
00471*        86          STOP                                                      MPT04710
00472*              C                                                               MPT04720
00473*              C        READ CARD TYPE 7  (SEE DESCRIPTION, SECTION B).        MPT04730
00474*              C                                                               MPT04740
00475*        87    160   READ (IN,1210) (PNAME(I,NPT),I=1,3),(SOURCE(I,NPT),I=1,8),ELP(NPT)MPT04750
00476*              C        CARD WITH    'ENDP'    IN COL 1-10 IS USED TO SIGNIFY END OF MPT04760
00477*              C        POINT SOURCES.                                         MPT04770
00478*        88          IF (PNAME(1,NPT).EQ.ENDP) GO TO 230                       MPT04780
00479*              C        ELHN, ELEVATION OF LOWEST STACK TOP IN INVENTORY, IS DETERMINEDMPT04790
00480*              C        IN USER HEIGHT UNITS                                   MPT04800
00481*        89          IF (IOPT(1).EQ.0) GO TO 170                               MPT04810
00482*        90          TOM=SOURCE(5,NPT)/CELM+ELP(NPT)                           MPT04820
00483*        91          IF (TOM.LT.ELHN) ELHN=TOM                                 MPT04830
00484*              C        LOWPT, ELEVATION OF LOWEST SOURCE GROUND-LEVEL         MPT04840
00485*              C         IN INVENTORY, IN USER HEIGHT UNITS.                   MPT04850
00486*        92          IF (ELP(NPT).LT.ELOW) ELOW=ELP(NPT)                       MPT04860
00487*              C        CALCULATE BUOYANCY FACTOR                              MPT04870
00488*        93    170   D=SOURCE(7,NPT)                                          MPT04880
00489*              C         FOLLOWING VARIABLE IS BRIGGS' F WITHOUT TEMPERATURE FACTOR. MPT04890
00490*        94          SOURCE(9,NPT)=2.45153*SOURCE(8,NPT)*D*D                   MPT04900
00491*              C        2.45153 IS GRAVITY OVER FOUR.                          MPT04910
00492*        95          TS=SOURCE(6,NPT)                                          MPT04920
00493*        96          IF (TS.GT.293.) GO TO 180                                 MPT04930
00494*        97          HF=SOURCE(5,NPT)                                          MPT04940
00495*        98          GO TO 200                                                 MPT04950
00496*        99    180   F=SOURCE(9,NPT)*(TS-293.)/TS                             MPT04960
00497*        00          IF (F.GE.55.) GO TO 190                                   MPT04970
00498*              C        ONLY BUOYANCY PLUME RISE IS CONSIDERED HERE.           MPT04980
00499*       101          HF=SOURCE(5,NPT)+21.825*F**0.75/3.                        MPT04990
00500*       102          GO TO 200                                                 MPT05000
```

```
00501*   103   190  HF=SOURCE(5,NPT)+38.71*F**0.6/3.                    MPT05010
00502*              C      HSAV, DSAV, AND PSAV ARE USED FOR TEMPORARY STORAGE   MPT05020
00503*              C      (OR AS DUMMIES) FOR THE NEXT 60 STATEMENTS.           MPT05030
00504*   104   200  HSAV(NPT)=HF                                          MPT05040
00505*              C      DETERMINE HEIGHT INDEX.                       MPT05050
00506*   105        DO 210 IH=2,9                                         MPT05060
00507*   106        IF (HF.LT.(HC1(IH)-.01)) GO TO 220                    MPT05070
00508*   107   210  CONTINUE                                              MPT05080
00509*   108        IH=10                                                 MPT05090
00510*   109   220  IS=IH-1                                               MPT05100
00511*   110        A=PXUCOF(2,IS)                                        MPT05110
00512*   111        B=PXUEXP(2,IS)                                        MPT05120
00513*   112        DSAV(NPT)=(A*HF**B)*SOURCE(IPOL,NPT)/3.               MPT05130
00514*              C      AN ESTIMATE OF THE POTENTIAL IMPACT OF EACH SOURCE IS   MPT05140
00515*              C      DETERMINED AND STORED IN DSAV. MAX CONCENTRATION IS     MPT05150
00516*              C      DETERMINED BY CHI(MAX)=(A*H**B)*Q/U WHERE               MPT05160
00517*              C      A IS THE COEFFICENT AND B IS THE EXPONENT. OF           MPT05170
00518*              C      MAXIMUM CHI*U/Q VALUES PREDETERMINED FOR B STABILITY    MPT05180
00519*              C      AND A SPECIFIC EFFECTIVE HEIGHT RANGE. PLUME RISE       MPT05190
00520*              C      IS CALCULATED FOR B STABILITY AND 3 M/SEC WIND SPEED.   MPT05200
00521*              C                                                      MPT05210
00522*              C      GO BACK AND READ DATA FOR ANOTHER POINT SOURCE.         MPT05220
00523*   113        IPSIGS(NPT)=0                                         MPT05230
00524*              C      LIST POINT SOURCE INFORMATION.                MPT05240
00525*   114        WRITE (IO,1510) NPT,(PNAME(J,NPT),J=1,3),(SOURCE(K,NPT),K=1,8),DSAMPT05250
00526*              1V(NPT),HSAV(NPT),ELP(NPT),F                           MPT05260
00527*   115        GO TO 150                                             MPT05270
00528*   116   230  NPT=NPT-1                                             MPT05280
00529*              C      CHECK FOR NPT < OR = 0                        MPT05290
00530*   117        IF (NPT.GT.0) GO TO 240                               MPT05300
00531*   118        WRITE (IO,1280) NPT                                   MPT05310
00532*   119        STOP                                                  MPT05320
00533*              C                                                      MPT05330
00534*              C->->->->SECTION G - RANK SIGNIFICANT SOURCES.         MPT05340
00535*              C                                                      MPT05350
00536*   120   240  IF (NSIGP.EQ.0) GO TO 280                             MPT05360
00537*              C      RANK NSIGP HIGHEST POINT SOURCES.             MPT05370
00538*   121        IF (NPT.LT.NSIGP) NSIGP=NPT                           MPT05380
00539*   122        DO 260 I=1,NSIGP                                      MPT05390
00540*   123        SIGMAX=-1.0                                           MPT05400
00541*   124        DO 250 J=1,NPT                                        MPT05410
00542*   125        IF (DSAV(J).LE.SIGMAX) GO TO 250                      MPT05420
00543*   126        SIGMAX=DSAV(J)                                        MPT05430
00544*   127        LMAX=J                                                MPT05440
00545*   128   250  CONTINUE                                              MPT05450
00546*              C      IMPS IS THE SOURCE NUMBER IN ORDER OF SIGNIFICANCE.     MPT05460
00547*   129        IMPS(I)=LMAX                                          MPT05470
00548*              C      PSAV IS THE CALC. CONC. IN ORDER OF SIGNIFICANCE.       MPT05480
00549*   130        PSAV(I)=SIGMAX                                        MPT05490
00550*   131   260  DSAV(LMAX)=-1.0                                       MPT05500
```

```
00551*                C        OUTPUT TABLE OF RANKED SOURCES.                    MPT05510
00552*        132           WRITE (IO,1520) TITLE(IP)                              MPT05520
00553*        133           DO 270 I=1,NSIGP                                       MPT05530
00554*        134           WRITE (IO,1530) I,PSAV(I),IMPS(I)                      MPT05540
00555*        135     270   CONTINUE                                               MPT05550
00556*                C                                                            MPT05560
00557*                C->->->->SECTION H - EMISSIONS WITH HEIGHT TABLE.            MPT05570
00558*                C                                                            MPT05580
00559*        136     280   IF (IOPT(9).EQ.1) GO TO 340                            MPT05590
00560*        137           DO 320 I=1,NPT                                         MPT05600
00561*        138           DO 290 J=1,20                                          MPT05610
00562*        139           HC=J*5.                                                MPT05620
00563*        140           IF (SOURCE(5,I).LE.HC) GO TO 300                       MPT05630
00564*        141     290   CONTINUE                                               MPT05640
00565*                C        POINT SOURCES WITH PHYSICAL HEIGHTS GT 100 METERS ARE LISTED  MPT05650
00566*                C        SEPARATELY.                                         MPT05660
00567*        142           WRITE (IO,1540) I,SOURCE(5,I),SOURCE(IPOL,I)           MPT05670
00568*        143           GO TO 310                                              MPT05680
00569*                C        ADD EMISSION RATE INTO TABLE AND TOTAL.             MPT05690
00570*        144     300   TABLE(1,J)=TABLE(1,J)+SOURCE(IPOL,I)                   MPT05700
00571*        145     310   TABLE(1,21)=TABLE(1,21)+SOURCE(IPOL,I)                 MPT05710
00572*        146     320   CONTINUE                                               MPT05720
00573*                C        OUTPUT SOURCE-STRENGTH-HEIGHT TABLE                 MPT05730
00574*                C        THIS TABLE DISPLAYS THE TOTAL EMISSIONS FOR POINT   MPT05740
00575*                C        SOURCES AND THE CUMULATIVE FREQUENCY ACCORDING TO   MPT05750
00576*                C        HEIGHT CLASS                                        MPT05760
00577*        147           WRITE (IO,1550) TITLE(IP)                              MPT05770
00578*                C        HEIGHT CLASS EMISSIONS ARE IN 1                     MPT05780
00579*                C        DETERMINE CUMULATIVE PERCENT IN 2                   MPT05790
00580*        148           IH1=0                                                  MPT05800
00581*        149           IH2=5                                                  MPT05810
00582*        150           IM1=1                                                  MPT05820
00583*        151           TABLE(2,1)=TABLE(1,1)/TABLE(1,21)                      MPT05830
00584*        152           WRITE (IO,1560) IH1,IH2,(TABLE(J,1),J=1,2)             MPT05840
00585*        153           DO 330 I=2,20                                          MPT05850
00586*        154           IH2=I*5                                                MPT05860
00587*        155           IH1=IH2-4                                              MPT05870
00588*        156           IM1=I-1                                                MPT05880
00589*        157           TABLE(2,I)=TABLE(1,I)/TABLE(1,21)+TABLE(2,IM1)         MPT05890
00590*        158           WRITE (IO,1560) IH1,IH2,(TABLE(J,I),J=1,2)             MPT05900
00591*        159     330   CONTINUE                                               MPT05910
00592*        160           WRITE (IO,1570) TABLE(1,21)                            MPT05920
00593*                C                                                            MPT05930
00594*                C->->->->SECTION I - EXECUTE FOR INPUT OF SIGNIFICANT SOURCE NUMBERS.  MPT05940
00595*                C                                                            MPT05950
00596*        161     340   WRITE (IO,1580)                                       MPT05960
00597*        162           IF (IOPT(7).EQ.0) GO TO 370                            MPT05970
00598*                C                                                            MPT05980
00599*                C        READ CARD TYPE 8 (SEE DESCRIPTION, SECTION B).      MPT05990
00600*                C                                                            MPT06000
```

```
00601*   163          READ (IN,1220) INPT,(MPS(I),I=1,INPT)                    MPT06010
00602*   164          WRITE (IO,1590) INPT,(MPS(I),I=1,INPT)                   MPT06020
00603*   165          IF (INPT.LE.NSIGP) GO TO 350                             MPT06030
00604*   166          WRITE (IO,1290) INPT,NSIGP                               MPT06040
00605*   167          STOP                                                     MPT06050
00606*   168     350  IF (INPT.EQ.0) GO TO 370                                 MPT06060
00607*   169          IF (MPS(INPT).EQ.0) WRITE (IO,1300)                      MPT06070
00608*   170          J=INPT+1                                                 MPT06080
00609*   171          K=1                                                      MPT06090
00610*              C     ADD SIGNIFICANT SOURCES DETERMINED FROM RANKED SOURCE LIST   MPT06100
00611*              C     IF NSIGP GREATER THAN INPT.                          MPT06110
00612*   172          IF (J.GT.NSIGP) GO TO 390                                MPT06120
00613*   173          DO 360 I=J,NSIGP                                         MPT06130
00614*   174          MPS(I)=IMPS(K)                                           MPT06140
00615*   175     360  K=K+1                                                    MPT06150
00616*   176          GO TO 390                                                MPT06160
00617*   177     370  DO 380 I=1,NSIGP                                         MPT06170
00618*   178     380  MPS(I)=IMPS(I)                                           MPT06180
00619*   179     390  WRITE (IO,1600) NPT,NSIGP,(MPS(I),I=1,NSIGP)             MPT06190
00620*   180          IF (IOPT(6).EQ.0) GO TO 410                              MPT06200
00621*              C     SAVE AVERAGE EMISSION RATE                           MPT06210
00622*   181          DO 400 I=1,NPT                                           MPT06220
00623*   182     400  PSAV(I)=SOURCE(IPOL,I)                                   MPT06230
00624*              C     FILL IN SIGNIFICANT POINT SOURCE ARRAY               MPT06240
00625*   183     410  DO 420 I=1,NSIGP                                         MPT06250
00626*   184          J=MPS(I)                                                 MPT06260
00627*   185     420  IPSIGS(J)=I                                              MPT06270
00628*              C                                                           MPT06280
00629*              C->->->->SECTION J - CHECK MET DATA IF FROM FILE OF ONE YEAR'S DATA.   MPT06290
00630*              C                                                           MPT06300
00631*   186          IF (IOPT(5).EQ.1) GO TO 450                              MPT06310
00632*              C                                                           MPT06320
00633*              C     READ CARD TYPE 9 (SEE DESCRIPTION, SECTION B).       MPT06330
00634*              C                                                           MPT06340
00635*   187          READ (IN, *  ) ISFCD,ISFCYR,IMXD,IMXYR                   MPT06350
00636*              C     READ ID RECORD FROM PREPROCESSED MET DISK OR TAPE FILE.   MPT06360
00637*   188          READ (11) ID,IYEAR,IDM,IYM                               MPT06370
00638*   189          IF (ISFCD.EQ.ID.AND.ISFCYR.EQ.IYEAR) GO TO 430           MPT06380
00639*   190          WRITE (IO,1390) ISFCD,ISFCYR,ID,IYEAR                    MPT06390
00640*   191          STOP                                                     MPT06400
00641*   192     430  IF (IMXD.EQ.IDM.AND.IMXYR.EQ.IYM) GO TO 440              MPT06410
00642*   193          WRITE (IO,1720) IMXD,IMXYR,IDM,IYM                       MPT06420
00643*   194          STOP                                                     MPT06430
00644*   195     440  WRITE (IO,1610) ISFCD,ISFCYR,IMXD,IMXYR                  MPT06440
00645*              C                                                           MPT06450
00646*              C->->->->SECTION K - GENERATE POLAR COORDINATE RECEPTORS.    MPT06460
00647*              C                                                           MPT06470
00648*   196     450  NRECEP=0                                                 MPT06480
00649*   197          WRITE (IO,1620)                                          MPT06490
00650*   198          IF (IOPT(8).NE.1) GO TO 520                              MPT06500
```

```
00651*                C                                                                MPT06510
00652*                C        READ CARD TYPE 10 (SEE DESCRIPTION, SECTION B).         MPT06520
00653*                C                                                                MPT06530
00654*        199           READ (IN, *   ) RADIL,CENTX,CENTY                         MPT06540
00655*        200           JA=0                                                       MPT06550
00656*        201           DO 460 J=1,5                                               MPT06560
00657*        202           IF (RADIL(J).EQ.0) GO TO 460                               MPT06570
00658*        203           JA=JA+1                                                    MPT06580
00659*        204     460   CONTINUE                                                   MPT06590
00660*        205           WRITE (IO,1630) CENTX,CENTY,RADIL                          MPT06600
00661*        206           DO 480 I=1,36                                              MPT06610
00662*                C          CALCULATE THE ANGLE IN RADIANS                        MPT06620
00663*        207           RADIK=FLOAT(I)*0.174532D                                   MPT06630
00664*                C        0.174532D IS 2*PI/36                                    MPT06640
00665*        208           SINRAD=SIN(RADIK)                                          MPT06650
00666*        209           COSRAD=COS(RADIK)                                          MPT06660
00667*        210           DO 470 J=1,JA                                              MPT06670
00668*        211           NRECEP=I+36*(J-1)                                          MPT06680
00669*        212           RREC(NRECEP)=(RADIL(J)*SINRAD)+CENTX                       MPT06690
00670*                C          CALCULATE THE EAST-COORDINATE                         MPT06700
00671*        213           SREC(NRECEP)=(RADIL(J)*COSRAD)+CENTY                       MPT06710
00672*                C          CALCULATE THE NORTH-COORDINATE                        MPT06720
00673*        214           RNAME(1,NRECEP)=ANAME(I)                                   MPT06730
00674*                C          ALPHANUMERIC INFORMATION WHICH INDICATES DEGREES AZIMUTH MPT06740
00675*        215           ENCODE (4,1680,RNAME(2,NRECEP)) RADIL(J)                   MPT06750
00676*                C          ENCODE THE FLOATING POINT VARIABLE OF RADIAL DISTANCE MPT06760
00677*                C          TO ALPHANUMERIC REPRESENTATION SO INFO CAN BE PRINTED MPT06770
00678*        216           ZR(NRECEP)=0.                                              MPT06780
00679*        217           ELR(NRECEP)=0.                                             MPT06790
00680*        218     470   CONTINUE                                                   MPT06800
00681*        219     480   CONTINUE                                                   MPT06810
00682*        220           NRECEP=36*JA                                               MPT06820
00683*                C                                                                MPT06830
00684*                C->->->->SECTION L - READ POLAR COORDINATE ELEVATIONS.            MPT06840
00685*                C                                                                MPT06850
00686*        221           IF (IOPT(1).EQ.0) GO TO 520                                MPT06860
00687*                C                                                                MPT06870
00688*                C        READ 36 CARDS, TYPE 11 (SEE DESCRIPTION, SECTION B).    MPT06880
00689*                C                                                                MPT06890
00690*        222           DO 510 I=1,36                                              MPT06900
00691*        223           READ (IN,1230) IDUM,(ELRDUM(J),J=1,JA)                     MPT06910
00692*        224           IF (IDUM.EQ.I) GO TO 490                                   MPT06920
00693*        225           WRITE (IO,1330) I,IDUM                                     MPT06930
00694*        226           STOP                                                       MPT06940
00695*        227     490   DO 500 J=1,JA                                              MPT06950
00696*        228           K=J-1                                                      MPT06960
00697*        229           L=K*36+I                                                   MPT06970
00698*        230     500   ELR(L)=ELRDUM(J)                                           MPT06980
00699*        231     510   CONTINUE                                                   MPT06990
00700*                C                                                                MPT07000
```

```
00701*                C->->->->SECTION M - READ AND PROCESS RECEPTOR INFORMATION.                MPT07010
00702*                C                                                                          MPT07020
00703*                C          NOW READ CARD TYPE 12 IF NECESSARY. MUST HAVE A CARD WITH       MPT07030
00704*                C          'ENDR' IN COLS 1-4 TO INDICATE END OF RECEPTOR CARDS.           MPT07040
00705*                C          NO MORE THAN 180 RECEPTORS CAN BE INPUT TO MPTER.               MPT07050
00706*                C        START LOOP TO ENTER RECEPTORS.                                    MPT07060
00707*        232     520    NRECEP=NRECEP+1                                                     MPT07070
00708*        233            IF (NRECEP.LE.180) GO TO 540                                        MPT07080
00709*        234            READ (IN,1200,END=530) DUM                                          MPT07090
00710*        235            IF (DUM.EQ.ENDR) GO TO 550                                          MPT07100
00711*        236     530    WRITE (IO,1340)                                                     MPT07110
00712*        237            STOP                                                                MPT07120
00713*                C                                                                          MPT07130
00714*                C        READ CARD TYPE 12 (SEE DESCRIPTION, SECTION B).                   MPT07140
00715*                C                                                                          MPT07150
00716*        238     540    READ (IN,1240) (RNAME(J,NRECEP),J=1,2),RREC(NRECEP),SREC(NRECEP),ZMPT07160
00717*                      1R(NRECEP),ELR(NRECEP)                                              MPT07170
00718*                C        PLACE 'ENDR' IN COLS 1 TO 4 ON CARD FOLLOWING LAST RECEPTOR       MPT07180
00719*                C        TO END READING TYPE 12 CARDS.                                     MPT07190
00720*        239            IF (RNAME(1,NRECEP).EQ.ENDR) GO TO 550                              MPT07200
00721*        240            GO TO 520                                                           MPT07210
00722*        241     550    NRECEP=NRECEP-1                                                     MPT07220
00723*        242            IF (IOPT(1).EQ.0) GO TO 570                                         MPT07230
00724*                C        IF TERRAIN OPTION IS EMPLOYED, DETERMINE IF                       MPT07240
00725*                C         RECEPTOR ELEVATIONS REQUIRE LABELING WITH ASTERISKS              MPT07250
00726*                C         FOR ADDITIONAL REMARKS.                                          MPT07260
00727*        243            DO 560 J=1,NRECEP                                                   MPT07270
00728*        244            IF (ELR(J).GT.ELHN.OR.ELR(J).LT.ELOW) STAR(2,J)=STR                 MPT07280
00729*        245            IF (ELR(J).GT.ELHN) STAR(1,J)=STR                                   MPT07290
00730*        246     560    CONTINUE                                                            MPT07300
00731*        247     570    IF (NRECEP.GT.0) GO TO 580                                          MPT07310
00732*        248            WRITE (IO,1350) NRECEP                                              MPT07320
00733*        249            STOP                                                                MPT07330
00734*                C        PRINT OUT TABLE OF RECEPTORS. ***                                 MPT07340
00735*        250     580    WRITE (IO,1650)                                                     MPT07350
00736*        251            DO 590 K=1,NRECEP                                                   MPT07360
00737*        252     590    WRITE (IO,1660) K,STAR(1,K),STAR(2,K),(RNAME(J,K),J=1,2),RREC(K),SMPT07370
00738*                      1REC(K),ZR(K),ELR(K)                                                MPT07380
00739*        253            IF (IOPT(1).EQ.0) GO TO 600                                         MPT07390
00740*        254            WRITE (IO,1670)                                                     MPT07400
00741*                C                                                                          MPT07410
00742*                C->->->->SECTION N - POSITION FILES AS REQUIRED.                           MPT07420
00743*                C                                                                          MPT07430
00744*        255     600    IF (IOPT(20).EQ.0) GO TO 610                                        MPT07440
00745*                C                                                                          MPT07450
00746*                C        READ CARD TYPE 13 (SEE DESCRIPTION, SECTION B).                   MPT07460
00747*                C                                                                          MPT07470
00748*        256            READ (IN, *   ) IDAY,LDRUN                                          MPT07480
00749*        257            WRITE (IO,1680) IDAY,LDRUN                                          MPT07490
00750*        258            IF (IDAY.EQ.0) GO TO 610                                            MPT07500
```

```
00751*              C        READ INFO FOR HIGH-FIVE TABLE FROM LAST SEGMENT.          MPT07510
00752*     259            READ (14) IDAYS,SUM,NHR,DAY1A,HR1,HMAXA                    MPT07520
00753*     260            REWIND 14                                                  MPT07530
00754*     261            IF (IDAY.EQ.IDAYS) GO TO 610                               MPT07540
00755*     262            WRITE (10,1360) IDAY,IDAYS                                 MPT07550
00756*     263            STOP                                                       MPT07560
00757*     264     610    NP=IDAY*(24/NAVG)                                          MPT07570
00758*              C        IF OPTION 21 = 1, WRITE INITIAL INFO TO UNIT 10          MPT07580
00759*     265            IF (IOPT(21).EQ.1) WRITE (10) NPER,NAVG,LINE1,LINE2,LINE3  MPT07590
00760*     266            IF (IOPT(22).EQ.0) GO TO 640                               MPT07600
00761*     267            IF (IDAY.LE.0) GO TO 630                                   MPT07610
00762*              C        SKIP REVIOUSLY GENERATED HOURLY RECORDS.                 MPT07620
00763*     268            ISKIP=IDAY*24+2                                            MPT07630
00764*     269            DO 620 I=1,ISKIP                                           MPT07640
00765*     270     620    READ (12)                                                  MPT07650
00766*     271            GO TO 640                                                  MPT07660
00767*              C        WRITE LEAD TWO RECORDS ON HOURLY FILE.                   MPT07670
00768*     272     630    WRITE (12) NPER,NAVG,LINE1,LINE2,LINE3                     MPT07680
00769*     273            WRITE (12) NRECEP,(RREC(I),I=1,NRECEP),(SREC(J),J=1,NRECEP) MPT07690
00770*     274     640    IF (IOPT(23).EQ.0) GO TO 670                               MPT07700
00771*     275            IF (IDAY.LE.0) GO TO 660                                   MPT07710
00772*              C        SKIP PREVIOUSLY GENERATED AVERAGING-PERIOD FILE.         MPT07720
00773*     276            ISKIP=NP+2                                                 MPT07730
00774*     277            DO 650 I=1,ISKIP                                           MPT07740
00775*     278     650    READ (13)                                                  MPT07750
00776*     279            GO TO 670                                                  MPT07760
00777*              C        WRITE LEAD TWO RECORDS ON AVERAGING PERIOD FILE.         MPT07770
00778*     280     660    WRITE (13) NPER,NAVG,LINE1,LINE2,LINE3                     MPT07780
00779*     281            WRITE (13) NRECEP,(RREC(I),I=1,NRECEP),(SREC(J),J=1,NRECEP) MPT07790
00780*     282     670    IF (IOPT(6).EQ.0) GO TO 690                                MPT07800
00781*     283            IF (IDAY.LE.0) GO TO 690                                   MPT07810
00782*     284            ISKIP=IDAY*24                                              MPT07820
00783*     285            DO 680 I=1,ISKIP                                           MPT07830
00784*     286     680    READ (15)                                                  MPT07840
00785*     287     690    IDAY=IDATE(2)-1                                            MPT07850
00786*     288            IF (IDAY.LE.0.OR.IOPT(5).EQ.1) GO TO 710                   MPT07860
00787*              C        SKIP PREVIOUSLY USED HOURLY EMISSION RECORDS.            MPT07870
00788*     289            DO 700 I=1,IDAY                                            MPT07880
00789*     290     700    READ (11)                                                  MPT07890
00790*     291     710    CONTINUE                                                   MPT07900
00791*              C                                                                 MPT07910
00792*              C->->->->SECTION 0 - START LOOPS FOR DAY AND AVG TIME; READ MET DATA. MPT07920
00793*              C                                                                 MPT07930
00794*     292     720    IDAY=IDAY+1                                                MPT07940
00795*     293            DAY=IDAY                                                   MPT07950
00796*     294            NHRS=0                                                     MPT07960
00797*     295            IF (IOPT(5).EQ.1) GO TO 760                                MPT07970
00798*              C        IF OPTION 5 EQUALS ZERO, INPUT MET DATA OFF DISK (UNIT 11) MPT07980
00799*     296            READ (11) JYR,IMO,DAY1,IKST,QU,QTEMP,DUMR,DTHETA,HLH       MPT07990
00800*     297            IF (JYR.NE.IDATE(1)) GO TO 730                             MPT08000
```

```
00801*   298          IF (DAY1.EQ.DAY) GO TO 740                                  MPT08010
00802*            C      DATE ON MET TAPE DOES NOT MATCH INTERNAL DATE            MPT08020
00803*   299      730  WRITE (IO,1770) JYR,IDATE(2),IDATE(1),IDAY                 MPT08030
00804*   300          STOP                                                        MPT08040
00805*            C      MODIFY WIND VECTOR BY 180 DEGREES. SINCE FLOW VECTORS WERE MPT08050
00806*            C      OUTPUT FROM RAMMET. THIS CONVERTS BACK TO WIND DIRECTIONS. MPT08060
00807*   301      740  IDATE(2)=DAY1                                              MPT08070
00808*   302          DO 750 IQ=1,24                                              MPT08080
00809*   303          IF (IKST(IQ).EQ.7) IKST(IQ)=6                               MPT08090
00810*   304          QTHETA(IQ)=QTHETA(IQ)+180.                                  MPT08100
00811*   305          IF (QTHETA(IQ).GT.360.) QTHETA(IQ)=QTHETA(IQ)-360.          MPT08110
00812*            C      RURAL MIXING HEIGHTS ARE USED FOR THIS APPLICATION       MPT08120
00813*   306      750  QHL(IQ)=HLH(1,IQ)                                          MPT08130
00814*   307      760  NB=IHSTRT                                                  MPT08140
00815*   308          NE=NB+NAVG-1                                                MPT08150
00816*   309          IF (NB.GT.0) GO TO 770                                      MPT08160
00817*   310          WRITE (IO,1780) IHSTRT                                      MPT08170
00818*   311          STOP                                                        MPT08180
00819*            C      START LOOP FOR AVERAGING PERIOD.                         MPT08190
00820*   312      770  U=0.0                                                      MPT08200
00821*   313          TEMP=0.0                                                    MPT08210
00822*   314          DELN=0.0                                                    MPT08220
00823*   315          DELM=0.0                                                    MPT08230
00824*   316          DO 780 I=1,7                                                MPT08240
00825*   317      780 IFREQ(I)=0.0                                                MPT08250
00826*   318          DO 800 I=NB,NE                                              MPT08260
00827*   319          JHR=I                                                       MPT08270
00828*   320          DAY2=IDATE(2)                                               MPT08280
00829*   321          IF (IOPT(5).EQ.0) GO TO 790                                 MPT08290
00830*            C                                                               MPT08300
00831*            C      READ CARD TYPE 14 IF IOPT(5) =1. (HOURLY MET DATA)       MPT08310
00832*            C       (SEE DESCRIPTION, SECTION B).                           MPT08320
00833*            C                                                               MPT08330
00834*   322          READ (IN, *   ) JYR,DAY1,JHR,IKST(JHR),QU(JHR),QTEMP(JHR),QTHETA(JHMPT08340
00835*                1R),QHL(JHR)                                               MPT08350
00836*   323          IF (I.NE.NB) GO TO 790                                      MPT08360
00837*            C      REDEFINE START HOURS AND DATES AT FIRST HOUR OF EACH     MPT08370
00838*            C       AVERAGING PERIOD IF READING HOURLY MET DATA.            MPT08380
00839*   324          IDATE(1)=JYR                                                MPT08390
00840*   325          IHSTRT=JHR                                                  MPT08400
00841*   326          ISTDAY=DAY1                                                 MPT08410
00842*   327          IDATE(2)=ISTDAY                                             MPT08420
00843*   328          DAY2=IDATE(2)                                               MPT08430
00844*   329      790 IF (IKST(JHR).EQ.7) IKST(JHR)=6                             MPT08440
00845*   330          IF (IOPT(10).EQ.1) GO TO 800                                MPT08450
00846*            C                                                               MPT08460
00847*            C->->->->SECTION P - CALCULATE AND STORE FOR HIGH-FIVE TABLE.    MPT08470
00848*            C                                                               MPT08480
00849*   331          IF (I.EQ.NB) WRITE (IO,1690) IDATE                          MPT08490
00850*   332          TRAD=QTHETA(JHR)*0.017453 29                                MPT08500
```

```
00851*          333          WRITE (IO,1700) JHR,QTHETA(JHR),QU(JHR),QM(JHR),QTEMP(JHR),IKST(J MPT08510
00852*                      1HR)                                                                MPT08520
00853*          334          SINT=SIN(TRAD)                                                      MPT08530
00854*          335          COST=COS(TRAD)                                                      MPT08540
00855*                  C       CALCULATE WIND COMPONENTS                                        MPT08550
00856*          336          URES=QU(JHR)                                                        MPT08560
00857*          337          UR=URES*SINT                                                        MPT08570
00858*          338          VR=URES*COST                                                        MPT08580
00859*          339          DELM=DELM+UR                                                        MPT08590
00860*          340          DELN=DELN+VR                                                        MPT08600
00861*          341          TEMP=TEMP+QTEMP(JHR)                                                MPT08610
00862*          342          U=U+URES                                                            MPT08620
00863*          343          KST=IKST(JHR)                                                       MPT08630
00864*          344          IFREQ(KST)=IFREQ(KST)+1                                             MPT08640
00865*                  C       END LOOP TO READ ALL MET DATA FOR AVERAGING PERIOD.              MPT08650
00866*          345      800 CONTINUE                                                            MPT08660
00867*          346          IF (IOPT(10).EQ.1) GO TO 860                                        MPT08670
00868*                  C       CALCULATE RESULTANT  WIND DIRECTION THETA                        MPT08680
00869*          347          DELN=DELN/NAVG                                                      MPT08690
00870*          348          DELM=DELM/NAVG                                                      MPT08700
00871*          349          THETA=ANGARC(DELM,DELN)                                             MPT08710
00872*                  C       CALCULATE AVERAGE AND RESULTANT SPEED AND PERSISTENCE.           MPT08720
00873*          350          U=U/NAVG                                                            MPT08730
00874*          351          TEMP=TEMP/NAVG                                                      MPT08740
00875*          352          URES=SQRT(DELN*DELN+DELM*DELM)                                      MPT08750
00876*          353          PERSIS=URES/U                                                       MPT08760
00877*                  C       DETERMINE MODAL AND AVERAGE STABILITY                            MPT08770
00878*          354          LSMAX=0                                                             MPT08780
00879*          355          DO 810 I=1,7                                                        MPT08790
00880*          356          LST=IFREQ(I)                                                        MPT08800
00881*          357          IF (LST.LE.LSMAX) GO TO 810                                         MPT08810
00882*          358          LSMAX=LST                                                           MPT08820
00883*          359          LSTAB=I                                                             MPT08830
00884*          360      810 CONTINUE                                                            MPT08840
00885*          361          IP1=LSTAB+1                                                         MPT08850
00886*          362          KST=LSTAB                                                           MPT08860
00887*          363          DO 820 I=IP1,7                                                      MPT08870
00888*          364          IF (LSMAX.EQ.IFREQ(I)) GO TO 830                                    MPT08880
00889*          365      820 CONTINUE                                                            MPT08890
00890*          366          GO TO 850                                                           MPT08900
00891*                  C       IF TIE FOR MAX MODAL STABILITY CALCULATE AVERAGE STABILITY       MPT08910
00892*          367      830 KSUM=0                                                              MPT08920
00893*          368          DO 840 J=1,7                                                        MPT08930
00894*          369      840 KSUM=KSUM+IFREQ(J)*J                                                MPT08940
00895*          370          KST=FLOAT(KSUM)/FLOAT(NAVG)+0.5                                     MPT08950
00896*                  C       PRINT RESULTANT MET DATA SUMMARY FOR AVERAGING PERIOD.           MPT08960
00897*          371      850 WRITE (IO,1710)                                                     MPT08970
00898*          372          WRITE (IO,1720) THETA,URES,U,TEMP,PERSIS,KST                        MPT08980
00899*                  C       REDEFINE NB AND NF IN CASE NON-CONSECUTIVE DAYS ARE BEING RUN    MPT08990
00900*          373      860 IF (IOPT(5).EQ.0) GO TO 870                                         MPT09000
```

```
00901*   374          NB=IHSTRT                                                  MPT09010
00902*   375          NE=IHSTRT+NAVG-1                                           MPT09020
00903*            C                                                              MPT09030
00904*            C->->->->SECTION Q - INITIALIZE FOR HOURLY LOOP.                MPT09040
00905*            C                                                              MPT09050
00906*            C        INITIALIZE SUMS FOR CONC AND PARTIAL CONC FOR AVG PERIOD.  MPT09060
00907*   376      870  DO 890 K=1,NRECEP                                         MPT09070
00908*   377          PCHI(K)=0.0                                                MPT09080
00909*   378          DO 880 I=1,26                                              MPT09090
00910*   379      880  PSIGS(K,I)=0.0                                             MPT09100
00911*   380      890  CONTINUE                                                   MPT09110
00912*            C        IF SAVING PARTIAL CONCENTRATIONS, WRITE INITIAL RECEPTOR INFO.  MPT09120
00913*   381          IF (IOPT(21).EQ.0) GO TO 900                               MPT09130
00914*   382          WRITE (10) NRECEP,NPT,(RREC(I),I=1,NRECEP),(SREC(I),I=1,NRECEP)  MPT09140
00915*            C                                                              MPT09150
00916*            C->->->->SECTION R - BEGIN HOURLY LOOP.                         MPT09160
00917*            C                                                              MPT09170
00918*   383      900  DO 1020 ILH=NB,NE                                          MPT09180
00919*   384          LH=ILH                                                     MPT09190
00920*   385          IF (LH.LE.24) GO TO 910                                    MPT09200
00921*   386          LH=MOD(ILH,24)                                             MPT09210
00922*   387          IF (LH.EQ.1) IDATE(2)=IDAY1                                MPT09220
00923*            C        INITIALIZE SUMS FOR CONC AND PARTIAL CONC FOR HOURLY PERIODS.  MPT09230
00924*   388      910  DO 930 K=1,NRECEP                                         MPT09240
00925*   389          PHCHI(K)=0.0                                               MPT09250
00926*   390          DO 920 I=1,26                                              MPT09260
00927*   391      920  PHSIGS(K,I)=0.0                                            MPT09270
00928*   392      930  CONTINUE                                                   MPT09280
00929*            C        SET MET CONDITIONS FOR THIS HOUR                       MPT09290
00930*   393          THETA=QTHETA(LH)                                           MPT09300
00931*   394          U=QU(LH)                                                   MPT09310
00932*   395          HL=QHL(LH)                                                 MPT09320
00933*   396          TEMP=QTEMP(LH)                                             MPT09330
00934*   397          KST=IKST(LH)                                               MPT09340
00935*   398          TRAD=THETA*0.01745329                                      MPT09350
00936*   399          SINT=SIN(TRAD)                                             MPT09360
00937*   400          COST=COS(TRAD)                                             MPT09370
00938*   401          CTER=CONTER(KST)                                           MPT09380
00939*            C        IF OPTION 6 IS 1, READ HOURLY EMISSIONS.               MPT09390
00940*   402          IF (IOPT(6).EQ.0) GO TO 940                                MPT09400
00941*   403          IDCK=IDATE(1)*1000000+IDATE(2)*100+LH                      MPT09410
00942*   404          READ (15) IDATP,(SOURCE(IPOL,I),I=1,NPT)                   MPT09420
00943*            C        CHECK DATE                                             MPT09430
00944*   405          IF (IDCK.EQ.IDATP) GO TO 940                               MPT09440
00945*   406          WRITE (IO,1790) IDCK,IDATP                                 MPT09450
00946*   407          STOP                                                       MPT09460
00947*            C        CALCULATE POINT SOURCE CONTRIBUTIONS                   MPT09470
00948*   408      940  CALL PTR                                                   MPT09480
00949*   409          IF (IOPT(22).EQ.0) GO TO 950                               MPT09490
00950*            C        WRITE HOURLY CONCENTRATIONS TO TAPE                    MPT09500
```

```
00951*   410          WRITE (12) IDATE(2),LH,(PHCHI(I),I=1,NREC EP)                MPT09510
00952*            C                                                                 MPT09520
00953*            C->->->->SECTION S - CALCULATE AND STORE FOR HIGH-FIVE TABLE.     MPT09530
00954*            C                                                                 MPT09540
00955*   411  950 NHR=NHR+1                                                         MPT09550
00956*            C        IF OPTION 19 IS 1, DELETE COMPUTATIONS FOR AVG CONC.     MPT09560
00957*            C         FOR LENGTH OF RECORD AND HIGH-FIVE TABLE.               MPT09570
00958*   412          IF (IOPT(19).EQ.1) GO TO 1010                                MPT09580
00959*            C        CUMULATE CONCENTRATIONS FOR AVG TIMES AND LENGTH OF RECORD.  MPT09590
00960*   413          DO 970 K=1,NREC EP                                           MPT09600
00961*   414          DO 960 L=1,NAVT                                              MPT09610
00962*   415  960 CONC(K,L)=CONC(K,L)+PHCHI(K)                                     MPT09620
00963*   416  970 SUM(K)=SUM(K)+PHCHI(K)                                           MPT09630
00964*            C          STORE DATE FOR WHICH CONCS. HAVE BEEN CALCULATED.     MPT09640
00965*   417          JDAY=IDATE(2)                                                MPT09650
00966*            C        SUBROUTINE RANK IS CALLED WHENEVER A COUNTER             MPT09660
00967*            C        INDICATES THAT ENOUGH END TO END HOURLY CONCENTRATIONS   MPT09670
00968*            C        HAVE BEEN STORED OFF TO COMPLETE AN AVG TIME.            MPT09680
00969*            C        NP3, NP8, NP24, NPX ARE USED AS COUNTERS FOR EACH        MPT09690
00970*            C        AVG TIME AND ARE ZEROED AFTER EACH CALL TO RANK.         MPT09700
00971*   418          CALL RANK (1)                                                MPT09710
00972*   419          NP3=NP3+1                                                    MPT09720
00973*   420          IF (NP3.NE.3) GO TO 980                                      MPT09730
00974*   421          CALL RANK (2)                                                MPT09740
00975*   422          NP3=0                                                        MPT09750
00976*   423  980 NP8=NP8+1                                                        MPT09760
00977*   424          IF (NP8.NE.8) GO TO 990                                      MPT09770
00978*   425          CALL RANK (3)                                                MPT09780
00979*   426          NP8=0                                                        MPT09790
00980*   427  990 NP24=NP24+1                                                      MPT09800
00981*   428          IF (NP24.NE.24) GO TO 1000                                   MPT09810
00982*   429          CALL RANK (4)                                                MPT09820
00983*   430          NP24=0                                                       MPT09830
00984*   431 1000 IF (NAVT.EQ.4) GO TO 1010                                        MPT09840
00985*   432          NPX=NPX+1                                                    MPT09850
00986*   433          IF (NPX.NE.NAV5) GO TO 1010                                  MPT09860
00987*   434          CALL RANK (5)                                                MPT09870
00988*   435          NPX=0                                                        MPT09880
00989*            C                                                                 MPT09890
00990*            C->->->->SECTION T - END HOURLY, AVERAGING TIME, AND DAILY LOOPS. MPT09900
00991*            C                                                                 MPT09910
00992*   436 1010 IF (IOPT(11).EQ.1.AND.IOPT(14).EQ.1) GO TO 1020                  MPT09920
00993*            C        IF BOTH OPTIONS 11 AND 14 CALL FOR OUTPUT DELETIONS,     MPT09930
00994*            C         SKIP HOURLY PRINTOUT.                                   MPT09940
00995*   437          CALL OUTHR                                                   MPT09950
00996*   438 1020 CONTINUE                                                         MPT09960
00997*            C                                                                 MPT09970
00998*            C        END OF HOURLY LOOP                                       MPT09980
00999*            C                                                                 MPT09990
01000*   439          IF (NE.GT.24) IDATE(2)=ISTDAY                                MPT10000
```

```
01001*                C        OUTPUT FINAL RESULTS                                  MPT10010
01002*        440           CALL OUTAVG                                              MPT10020
01003*        441           NP=NP+1                                                  MPT10030
01004*        442           NHRS=NHRS+NAVG                                           MPT10040
01005*                C        NEXT STATEMENT IS BRANCH FOR END OF RUN.              MPT10050
01006*        443           IF (NP.GE.NPER) GO TO 1050                               MPT10060
01007*        444           IF (NHRS.LT.24) GO TO 1030                               MPT10070
01008*        445           IF (IOPT(20).EQ.0) GO TO 720                             MPT10080
01009*                C        NEXT STATEMENT CHECKS FOR END OF SEGMENTED RUN.       MPT10090
01010*        446           IF (IDAY.GE.LDRUN) GO TO 1040                            MPT10100
01011*        447           GO TO 720                                                MPT10110
01012*                C                                                              MPT10120
01013*                C          END OF LOOP FOR CALENDAR DAYS                       MPT10130
01014*                C                                                              MPT10140
01015*        448     1030  NB=NB+NAVG                                               MPT10150
01016*        449           NE=NE+NAVG                                               MPT10160
01017*        450           IF (NB.LE.24) GO TO 770                                  MPT10170
01018*        451           NB=MOD(NB,24)                                            MPT10180
01019*        452           NE=NB+NAVG-1                                             MPT10190
01020*        453           GO TO 770                                                MPT10200
01021*                C                                                              MPT10210
01022*                C        END OF LOOP FOR AVERAGING PERIOD.                     MPT10220
01023*                C                                                              MPT10230
01024*                C        IF SEGMENTED RUN, TEMPORARILY STORE                   MPT10240
01025*                C         HIGH-FIVE INFO ON UNIT 14 FILE.                      MPT10250
01026*        454     1040  WRITE (14) IDAY,SUM,NHR,DAY1A,HR1,HMAXA                  MPT10260
01027*        455           WRITE (10,1730) IDAY                                     MPT10270
01028*        456           GO TO 1140                                               MPT10280
01029*        457     1050  IF (IOPT(19).EQ.1) GO TO 1140                            MPT10290
01030*                C                                                              MPT10300
01031*                C->->->->SECTION U - WRITE AVERAGE CONC. AND HIGH-FIVE TABLES. MPT10310
01032*                C                                                              MPT10320
01033*                C        IF OPTION 19 = 0, WRITE AVERAGE CONCENTRATION.        MPT10330
01034*                C         FOR LENGTH OF RECORD AND HIGH-FIVE TABLE.            MPT10340
01035*        458           DO 1060 J=1,NRECP                                        MPT10350
01036*        459           STAR(1,J)=BLNK                                           MPT10360
01037*        460           STAR(2,J)=BLNK                                           MPT10370
01038*        461     1060  CONTINUE                                                 MPT10380
01039*        462           WRITE (10,1800) LINE1,LINE2,LINE3                        MPT10390
01040*        463           HR2=NB                                                   MPT10400
01041*        464           SUM(1)=SUM(1)/NHR                                        MPT10410
01042*        465           HIMAX=SUM(1)                                             MPT10420
01043*        466           KMX=1                                                    MPT10430
01044*                C        INITIALIZE PERIODIC CONC TO BEGIN RANKING FOR PERIODIC MAX MPT10440
01045*        467           DO 1070 K=2,NRECP                                        MPT10450
01046*        468           SUM(K)=SUM(K)/NHR                                        MPT10460
01047*        469           IF (SUM(K).LE.HIMAX) GO TO 1070                          MPT10470
01048*        470           KMX=K                                                    MPT10480
01049*        471           HIMAX=SUM(K)                                             MPT10490
01050*        472     1070  CONTINUE                                                 MPT10500
```

```
01051*   473          STAR(1,KMX)=STR                                          MPT10510
01052*          C        FIND HIGHEST AVERAGE CONC. AMONG RECEPTORS.           MPT10520
01053*   474          WRITE (IO,1740) DAY1,HR1,DAY2,HR2                        MPT10530
01054*   475          DO 1080 K=1,NRECEP                                       MPT10540
01055*   476     1080 WRITE (IO,1750) K,(RNAME(J,K),J=1,2),RREC(K),SREC(K),ZR(K),ELR(K),MPT10550
01056*                1STAR(1,K),SUM(K)                                        MPT10560
01057*   477          STAR(1,KMX)=BLNK                                         MPT10570
01058*          C        LOOP TO WRITE HIGH-FIVE TABLE FOR 4 OR 5 AVG TIMES.   MPT10580
01059*   478          DO 1130 L=1,NAVT                                         MPT10590
01060*          C        ASTERISKS DEPICT RECEPTORS WITH HIGHEST AND           MPT10600
01061*          C         SECOND HIGHEST CONCENTRATIONS.                       MPT10610
01062*   479          K1=1                                                     MPT10620
01063*   480          K2=1                                                     MPT10630
01064*   481          HI1=HMAXA(1,1,L)                                         MPT10640
01065*   482          HI2=HMAXA(2,1,L)                                         MPT10650
01066*   483          DO 1100 K=2,NRECEP                                       MPT10660
01067*   484          IF (HMAXA(1,K,L).LE.HI1) GO TO 1090                      MPT10670
01068*   485          HI1=HMAXA(1,K,L)                                         MPT10680
01069*   486          K1=K                                                     MPT10690
01070*   487     1090 IF (HMAXA(2,K,L).LE.HI2) GO TO 1100                      MPT10700
01071*   488          HI2=HMAXA(2,K,L)                                         MPT10710
01072*   489          K2=K                                                     MPT10720
01073*   490     1100 CONTINUE                                                 MPT10730
01074*   491          STAR(1,K1)=STR                                           MPT10740
01075*   492          STAR(2,K2)=STR                                           MPT10750
01076*   493          WRITE (IO,1760) NTIME(L),TITLE(IP),(I,I=1,F)             MPT10760
01077*   494          DUM=ATIME(L)                                             MPT10770
01078*   495          DO 1120 K=1,NRECEP                                       MPT10780
01079*   496          DO 1110 J=1,5                                            MPT10790
01080*   497     1110 HMAXA(J,K,L)=HMAXA(J,K,L)/DUM                            MPT10800
01081*   498          WRITE (IO,1770) K,RREC(K),SREC(K),(STAR(J,K),HMAXA(J,K,L),NDAY(J,KMPT10810
01082*                1,L),IHR(J,K,L),J=1,2),(HMAXA(J,K,L),NDAY(J,K,L),IHR(J,K,L),J=3,5) MPT10820
01083*   499     1120 CONTINUE                                                 MPT10830
01084*          C        INITIALIZE ASTERISK STORAGE TO BLANKS.                MPT10840
01085*   500          STAR(1,K1)=BLNK                                          MPT10850
01086*   501          STAR(2,K2)=BLNK                                          MPT10860
01087*   502     1130 CONTINUE                                                 MPT10870
01088*          C                                                             MPT10880
01089*          C->->->->->SECTION V - CLOSE OUT FILES.                        MPT10890
01090*          C                                                             MPT10900
01091*   503     1140 IF (IOPT(21).EQ.0) GO TO 1150                            MPT10910
01092*   504          END FILE 10                                              MPT10920
01093*   505          END FILE 10                                              MPT10930
01094*   506     1150 IF (IOPT(22).EQ.0) GO TO 1160                            MPT10940
01095*   507          END FILE 12                                              MPT10950
01096*   508          END FILE 12                                              MPT10960
01097*   509     1160 IF (IOPT(23).EQ.0) GO TO 1170                            MPT10970
01098*   510          END FILE 13                                              MPT10980
01099*   511          END FILE 13                                              MPT10990
01100*   512     1170 STOP                                                     MPT11000
```

```
C
C->->->->SECTION X - OUTLINE OF PROGRAM SECTIONS                          MPT11010
C                                                                         MPT11020
C                                                                         MPT11030
C        SECTION A - GENERAL REMARKS                                      MPT11040
C        SECTION B - DATA INPUT LISTS.                                    MPT11050
C        SECTION C - COMMON, DIMENSION, AND DATA STATEMENTS.              MPT11060
C        SECTION D - FLOW DIAGRAM.                                        MPT11070
C        SECTION E - RUN SET-UP AND READ FIRST 6 INPUT CARDS.             MPT11080
C        SECTION F - INPUT AND PROCESS EMISSION INFORMATION.              MPT11090
C        SECTION G - RANK SIGNIFICANT SOURCES.                            MPT11100
C        SECTION H - EMISSIONS WITH HEIGHT TABLE.                         MPT11110
C        SECTION I - EXECUTE FOR INPUT OF SIGNIFICANT SOURCE NUMBERS.     MPT11120
C        SECTION J - CHECK MET. DATA IF FROM FILE OF ONE YEARS'S DATA.    MPT11130
C        SECTION K - GENERATE POLAR COORDINATE RECEPTORS.                 MPT11140
C        SECTION L - READ POLAR COORDINATE ELEVATIONS.                    MPT11150
C        SECTION M - READ AND PROCESS RECEPTOR INFORMATION.               MPT11160
C        SECTION N - POSITION FILES AS REQUIRED.                          MPT11170
C        SECTION O - START LOOPS FOR DAY AND AVERAGING TIME; READ         MPT11180
C                    MET. DATA.                                           MPT11190
C        SECTION P - CALCULATE AND WRITE MET. SUMMARY INFORMATION.        MPT11200
C        SECTION Q - INITIALIZE FOR HOURLY LOOP.                          MPT11210
C        SECTION R - BEGIN HOURLY LOOP.                                   MPT11220
C        SECTION S - CALCULATE AND STORE FOR HIGH-FIVE TABLE.             MPT11230
C        SECTION T - END HOURLY, AVERAGING TIME, AND DAILY LOOPS.         MPT11240
C        SECTION U - WRITE AVERAGE CONC. AND HIGH-FIVE TABLES.            MPT11250
C        SECTION V - CLOSE OUT FILES.                                     MPT11260
C        SECTION W - FORMAT STATEMENTS.                                   MPT11270
C        SECTION X - OUTLINE OF PROGRAM SECTIONS.                         MPT11280
C        SECTION Y - INPUT AND OUTPUT FILE DESCRIPTIONS.                  MPT11290
C        SECTION Z - INDEX AND GLOSSARY.                                  MPT11300
C                                                                         MPT11310
C                                                                         MPT11320
C->->->-> SECTION Y -  INPUT AND OUTPUT FILE DESCRIPTIONS.                MPT11330
C                                                                         MPT11340
C***     INPUT AND OUTPUT FILE DESCRIPTIONS.                              MPT11350
C                                                                         MPT11360
C***  INPUT FILE (UNIT 11) METEOROLOGICAL DATA (USED IF IOPT(50)=0)       MPT11370
C                                                                         MPT11380
C       RECORD 1                                                          MPT11390
C                                                                         MPT11400
C         ID          SEC STATION IDENTIFIER, 5 DIGITS                    MPT11410
C         IYEAR       YEAR OF SURFACE DATA, 2 DIGITS                      MPT11420
C         IDM         MIX HT STATION IDENTIFIER, 5 DIGITS                 MPT11430
C         IYR         YEAR OF MIX HT DATA, 2 DIGITS                       MPT11440
C                                                                         MPT11450
C       RECORD TYPE 2 (ONE FOR EACH DAY OF YEAR)                          MPT11460
C                                                                         MPT11470
C         JYR         YEAR                                                MPT11480
C         IMO         MONTH                                               MPT11490
C         DAY1        JULIAN DAY                                          MPT11500
```

```
C        IKST(24)     STABILITY CLASS                                    MPT11510
C        QU(24)       WIND SPEED, METERS PER SECOND                      MPT11520
C        QTEMP(24)    AMBIENT AIR TEMPERATURE, KELVIN                    MPT11530
C        DUMR(24)     FLOW VECTOR TO 10 DEG, DEGREES AZIMUTH             MPT11540
C        QTHETA(24)   RANDOMIZED FLOW VECTOR, DEGREES AZIMUTH            MPT11550
C        HLH(2,24)    MIXING HEIGHT, METERS                              MPT11560
C                                                                        MPT11570
C*** INPUT FILE(UNIT 15) EMISSION DATA (USED IF IOPT(6)=1)               MPT11580
C                                                                        MPT11590
C      RECORD TYPE 1 (ONE FOR EACH HOUR OF SIMULATION)                   MPT11600
C                                                                        MPT11610
C        IDATP        DATE-TIME INDICATOR CONSISTING OF YEAR, JULIAN DAY,MPT11620
C                      AND HOUR: YYDDDHH.                                MPT11630
C        SOURCE(IPOL,I),I=1,NPT  EMISSION RATE FOR THE POLLUTANT IPOL   MPT11640
C                                FOR EACH SOURCE, GRAMS PER SECOND.     MPT11650
C                                                                        MPT11660
C*** OUTPUT PUNCHED CARDS (UNIT 1) AVERAGE CONCENTRATIONS (PUNCHED IF    MPT11670
C                                IOPT(24)=1)                             MPT11680
C                                                                        MPT11690
C      CARD TYPE 1 (ONE FOR EACH RECEPTOR FOR EACH AVERAGING TIME)       MPT11700
C                                                                        MPT11710
C        CC:1-4       WORD 'CNTL' PUNCHED                                MPT11720
C        CC:5         BLANK                                              MPT11730
C        CC:6-15      RREC  EAST COORDINATE OF RECEPTOR, USER UNITS      MPT11740
C        CC:16-25     SREC  NORTH COORDINATE OF RECEPTOR, USER UNITS     MPT11750
C        CC:26-35     GWU   CONCENTRATION FOR AVERAGING TIME, MICROG/M**3MPT11760
C        CC:36-55     BLANK                                              MPT11770
C        CC:56-59     K     RECEPTOR NUMBER                              MPT11780
C        CC:60-69     ZR    RECEPTOR HEIGHT ABOVE GROUND, METERS         MPT11790
C        CC:70-79     ELR   RECEPTOR GROUND-LEVEL ELEVATION, USER HT UNITSMPT11800
C                                                                        MPT11810
C*** OUTPUT FILE (UNIT 10) PARTIAL CONCENTRATIONS (USED IF IOPT(21)=1)   MPT11820
C                                                                        MPT11830
C      RECORD TYPE 1                                                     MPT11840
C                                                                        MPT11850
C        NPEP         NUMBER OF PERIODS                                  MPT11860
C        NAVG         NUMBER OF HOURS IN AVERAGING PERIOD.               MPT11870
C        LINE1(14)    80 ALPHANUMERIC CHARACTERS FOR TITLE.              MPT11880
C        LINE2(14)    80 ALPHANUMERIC CHARACTERS FOR TITLE.              MPT11890
C        LINE3(14)    80 ALPHANUMERIC CHARACTERS FOR TITLE.              MPT11900
C                                                                        MPT11910
C      RECORD TYPE 2 (FROM MPTER) (ONE FOR EACH AVERAGING PERIOD)        MPT11920
C                                                                        MPT11930
C        NRECEP       NUMBER OF RECEPTORS                                MPT11940
C        NPT          NUMBER OF SOURCES                                  MPT11950
C        RREC(I),I=1,NRECEP  EAST COORDINATE OF RECEPTOR, USER UNITS     MPT11960
C        SREC(I),I=1,NRECEP  NORTH COORDINATE OF RECEPTOR, USER UNITS    MPT11970
C                                                                        MPT11980
C      RECORD TYPE 3 (ONE FOR EACH RECEPTOR FOR EACH SIMULATED HOUR,     MPT11990
C                      FROM PTR)                                         MPT12000
```

```
01201*   C                                                                          MPT12010
01202*   C        IDATE        YEAR AND JULIAN DAY                                  MPT12020
01203*   C        LH           HOUR                                                 MPT12030
01204*   C        K            RECEPTOR NUMBER                                      MPT12040
01205*   C        PARTC(J),J=1,NPT  CONCENTRATION AT RECEPTOR K FROM SOURCE J,      MPT12050
01206*   C                                G/M**3.                                   MPT12060
01207*   C                                                                          MPT12070
01208*   C** * OUTPUT FILE (UNIT 12) HOURLY CONCENTRATIONS (USED IF IOPT(22)=1)     MPT12080
01209*   C                                                                          MPT12090
01210*   C     RECORD 1                                                             MPT12100
01211*   C                                                                          MPT12110
01212*   C        NPER         NUMBER OF PERIODS                                    MPT12120
01213*   C        NAVG         NUMBER OF HOURS IN AVERAGING PERIOD.                 MPT12130
01214*   C        LINE1(14)    80 ALPHANUMERIC CHARACTERS FOR TITLE.                MPT12140
01215*   C        LINE2(14)    80 ALPHANUMERIC CHARACTERS FOR TITLE.                MPT12150
01216*   C        LINE3(14)    80 ALPHANUMERIC CHARACTERS FOR TITLE.                MPT12160
01217*   C                                                                          MPT12170
01218*   C     RECORD 2                                                             MPT12180
01219*   C                                                                          MPT12190
01220*   C        NRECEP       NUMBER OF RECEPTORS.                                 MPT12200
01221*   C        RREC(I),I=1,NRECEP  EAST COORDINATE OF RECEPTOR, USER UNITS       MPT12210
01222*   C        SREC(I),I=1,NRECEP  NORTH COORDINATE OF RECEPTOR, USER UNITS      MPT12220
01223*   C                                                                          MPT12230
01224*   C     RECORD TYPE 3 (ONE FOR EACH SIMULATED HOUR)                          MPT12240
01225*   C                                                                          MPT12250
01226*   C        IDATE(2)     JULIAN DAY                                           MPT12260
01227*   C        LH           HOUR                                                 MPT12270
01228*   C        PHCHI(I),I=1,NRECEP  HOURLY CONCENTRATION FOR EACH RECEPTOR,      MPT12280
01229*   C                                G/M**3.                                   MPT12290
01230*   C                                                                          MPT12300
01231*   C** * OUTPUT FILE (UNIT 13) AVERAGING-PERIOD CONCENTRATIONS (USED IF       MPT12310
01232*   C                                IOPT(23)=1)                               MPT12320
01233*   C                                                                          MPT12330
01234*   C     RECORD 1                                                             MPT12340
01235*   C                                                                          MPT12350
01236*   C        NPER         NUMBER OF PERIODS                                    MPT12360
01237*   C        NAVG         NUMBER OF HOURS IN AVERAGING PERIOD.                 MPT12370
01238*   C        LINE1(14)    80 ALPHANUMERIC CHARACTERS FOR TITLE.                MPT12380
01239*   C        LINE2(14)    80 ALPHANUMERIC CHARACTERS FOR TITLE.                MPT12390
01240*   C        LINE3(14)    80 ALPHANUMERIC CHARACTERS FOR TITLE.                MPT12400
01241*   C                                                                          MPT12410
01242*   C     RECORD 2                                                             MPT12420
01243*   C                                                                          MPT12430
01244*   C        NRECEP       NUMBER OF RECEPTORS.                                 MPT12440
01245*   C        RREC(I),I=1,NRECEP  EAST COORDINATE OF RECEPTOR, USER UNITS       MPT12450
01246*   C        SREC(I),I=1,NRECEP  NORTH COORDINATE OF RECEPTOR, USER UNITS      MPT12460
01247*   C                                                                          MPT12470
01248*   C     RECORD TYPE 3 (ONE FOR EACH SIMULATED AVERAGING PERIOD)              MPT12480
01249*   C                                                                          MPT12490
01250*   C        IDATE(2)     JULIAN DAY                                           MPT12500
```

```
01251*                C        NB            ENDING HOUR OF PERIOD                                    MPT12510
01252*                C        PCHI(K),K=1,NRECEP  AVERAGING PERIOD CONCENTRATION FOR EACH            MPT12520
01253*                C                             RECEPTOR, G/M**3.                                  MPT12530
01254*                C                                                                                MPT12540
01255*                C** TEMPORARY FILE (UNIT 14) VALUES FOR HIGH-FIVE TABLES (USED IF               MPT12550
01256*                C                                  IOPT(20)=1)                                   MPT12560
01257*                C                                                                                MPT12570
01258*                C      ONLY RECORD                                                               MPT12580
01259*                C                                                                                MPT12590
01260*                C        NDAY(ON WRITE)     NUMBER OF DAYS PROCESSED                             MPT12600
01261*                C        IDAYS(ON READ)     NUMBER OF DAYS PREVIOUSLY PROCESSED                  MPT12610
01262*                C        SUM(180)           CUMULATION OF LONG-TERM CONCENTRATION,(G/M**3)MPT12620
01263*                C        NHR                NUMBER OF HOURS PROCESSED                            MPT12630
01264*                C        DAY1A              JULIAN DAY OF START OF LENGTH OF RECORD.             MPT12640
01265*                C        HR1                START HOUR OF LENGTH OF RECORD                       MPT12650
01266*                C        HMAXA(3,5,180,5)   HIGHEST FIVE CONCENTRATIONS (G/M**3), AND            MPT12660
01267*                C                            ASSOCIATED DAY AND HOUR, FOR EACH RECEPTOR, MPT12670
01268*                C                            FOR FIVE DIFFERENT AVERAGING TIMES.                 MPT12680
01269*                C                                                                                MPT12690
01270*                C->->->->SECTION W - FORMAT STATEMENTS.                                          MPT12700
01271*                C                                                                                MPT12710
01272*                C        INPUT FORMATS                                                           MPT12720
01273*                C                                                                                MPT12730
01274*          13    1180  FORMAT (20A4/20A4/20A4)                                                    MPT12740
01275*         514    1200  FORMAT (A4)                                                                MPT12750
01276*         515    1210  FORMAT (3A4,8F8.2,F4.0)                                                    MPT12760
01277*         516    1220  FORMAT (26I3)                                                              MPT12770
01278*         517    1230  FORMAT (I2,8X,5F10.0)                                                      MPT12780
01279*         518    1240  FORMAT (2A4,2F10.3,2F10.0)                                                 MPT12790
01280*                C                                                                                MPT12800
01281*                C        ERROR STATEMENT FORMATS                                                 MPT12810
01282*                C                                                                                MPT12820
01283*         519    1250  FORMAT (1X,' NSIGP (THE NO. OF SIGNF POINT SOURCES) WAS FOUND ',' TMPT12830
01284*                     10 EXCEED THE LIMIT (25).  USER TRIED TO INPUT ',I3,' SOURCES'/'  MPT12840
01285*                     2 ***********EXECUTION TERMINATED**********')                          MPT12850
01286*         520    1260  FORMAT (1H0,'CONTER VALUE IS OUTSIDE OF RANGE: ','ZERO TO ONE. EXEMPT12860
01287*                     1CUTION TERMINATED.')                                                    MPT12870
01288*         521    1270  FORMAT (' USER TRIED TO INPUT MORE THAN ',I4,' POINT SOURCES. THESMPT12880
01289*                     1 GOES BEYOND THE CURRENT PROGRAM DIMENSIONS.')                          MPT12890
01290*         522    1280  FORMAT (1X,'NPT =  ',I3,'I.E., EQUAL OR LESS THAN ZERO'/' RUN TERMMPT12900
01291*                     1INATED---CHECK INPUT DATA')                                             MPT12910
01292*         523    1290  FORMAT (1H0,'***ERROR---USER TRIED TO SPECIFY ',I4,' SIGNIFICANT SMPT12920
01293*                     1OURCES, BUT IS ONLY ALLOWING ',I3,' TOTAL SIGNIFICANT SOURCES IN TMPT12930
01294*                     2HIS RUN.',/2X,'***RUN TERMINATED-CHECK INPUT DATA!***')             MPT12940
01295*         524    1300  FORMAT (' (MPS) THE INPUT SIGNIFICANT SOURCE NUMBER ','WAS FOUND TMPT12950
01296*                     10 EQUAL ZERO - USER CHECK INPUT DATA.')                                 MPT12960
01297*         525    1310  FORMAT (' SURFACE DATA IDENTIFIERS READ INTO MODEL (STATION=',I5,'MPT12970
01298*                     1 ,YEAR=',I2,') DO NOT AGREE WITH THE PREPROCESSOR OUTPUT FILE',/1XMPT12980
01299*                     2,' (STATION=',I5,' ,YEAR=',I2)                                          MPT12990
01300*         526    1320  FORMAT (' MIXING HEIGHT IDENTIFIERS READ INTO MODEL (STATION=',I5,MPT13000
```

```
01301*                  1' ,YEAR=',I2,') DO NOT AGREE WITH THE PREPROCESSOR OUTPUT FILE',/1MPT13010
01302*                  2X,' (STATION-',I5,' ,YEAR=',I2)                                  MPT13020
01303*        527   1330 FORMAT (1H0,' WRONG RECEPTOR ELEVATION CARD READ.','READ CARD FOR MPT13030
01304*                  1AZIMUTH ',I3,' SHOULD HAVE BEEN ',I3,'.')                        MPT13040
01305*        528   1340 FORMAT (1X,'****USER EITHER TRIED TO INPUT MORE THAN 180 ','RECEPTMPT13050
01306*                  1ORS OR ENDREC WAS NOT PLACED AFTER THE LAST RECEPTOR ','CARD****',/MPT13060
01307*                  2'********EXECUTION TERMINATED*******')                           MPT13070
01308*        529   1350 FORMAT (1X,'NO RECEPTORS HAVE BEEN CHOSEN')                      MPT13080
01309*        530   1360 FORMAT (1H0,'***DAYS DO NOT MATCH, IDAY = ',I4,', IDAYS = ',I4)  MPT13090
01310*        531   1370 FORMAT (' DATE ON MET. TAPE, ',I2,I3,' ,DOES NOT MATCH INTERNAL DAMPT13100
01311*                  1TE, ',I2,I3)                                                     MPT13110
01312*        532   1380 FORMAT (' HOUR ',I3,' IS NOT PERMITTED. HOURS MUST BE DEFINED BETWMPT13120
01313*                  1EEN 1 AND 24')                                                   MPT13130
01314*        533   1390 FORMAT (' DATE BEING PROCESSED IS= ',I8/1X,'DATE OF HOURLY POINT EMPT13140
01315*                  1MISSION RECORD IS =',I8/1X,'***PLEASE CHECK EMISSION RECORDS***') MPT13150
01316*              C                                                                     MPT13160
01317*              C       OUTPUT FORMATS                                                MPT13170
01318*              C                                                                     MPT13180
01319*        534   1400 FORMAT ('1',T40,'MPTER - VERSION 79365'/1X,20A4/1X,20A4/1X,20A4) MPT13190
01320*        535   1410 FORMAT (1H0,T30,'GENERAL INPUT INFORMATION'//2X,'THIS RUN OF MPTERMPT13200
01321*                  1-VERSION 79365 IS FOR ','THE POLLUTANT ',A4,' FOR ',I3,1X,T3,'-HOUMPT13210
01322*                  2R PERIODS.'/2X,'CONCENTRATION ESTIMATES BEGIN ON HOUR-',I2,', JUL IMPT13220
01323*                  3AN DAY-',I3,', YEAR-19',I2,'.'/1X,' A FACTOR OF ',F14.7,' HAS BEENMPT13230
01324*                  4 SPECIFIED TO ','CONVERT USER LENGTH UNITS TO KILOMETERS.'/1X,I3,'MPT13240
01325*                  5 SIGNIFICANT SOURCES ARE TO BE CONSIDERED.')                     MPT13250
01326*        536   1420 FORMAT (1H ,'THIS RUN WILL NOT CONSIDER ANY POLLUTANT LOSS.')    MPT13260
01327*        537   1430 FORMAT (1H ,2X,'A HALF-LIFE OF ',F10.2,' (SECONDS) HAS BEEN ASSUMEMPT13270
01328*                  1D BY THE USER.')                                                 MPT13280
01329*        538   1440 FORMAT (1X,' HIGH-FIVE SUMMARY CONCENTRATION TABLES ','WILL BE OUTMPT13290
01330*                  1PUT FOR ',I3,' AVERAGING PERIODS.'/' AVG TIMES ','OF 1,3,8, AND 2MPT13300
01331*                  24 HOURS ARE AUTOMATICALLY DISPLAYED.')                           MPT13310
01332*        539   1450 FORMAT (1H ,2X,'A FACTOR OF ',F14.7,' HAS BEEN SPECIFIED TO CONVERMPT13320
01333*                  1T USER HEIGHT UNITS TO METERS.')                                 MPT13330
01334*        540   1460 FORMAT (1H0,T3,'OPTION ',T16,'OPTION LIST',T46,'OPTION SPECIFICATMPT13340
01335*                  1ION : 0= IGNORE OPTION'/1X,T6 8,' 1= USE OPTION'/T25,'TECHNICAL OPTMPT13350
01336*                  2IONS'/1X,T7,I2,T16,'TERRAIN ADJUSTMENTS',T70,I1/1X,T7,T2,T16,'DO NMPT13360
01337*                  3OT INCLUDE STACK DOWNWASH CALCULATIONS',T70,I1/1X,T7,I2,T16,'DO NOMPT13370
01338*                  4T INCLUDE GRADUAL PLUME RISE CALCULATIONS',T70,I1/1X,T7,I2,T16,'CAMPT13380
01339*                  5LCULATE INITIAL PLUME SIZE',T70,I1/1X,T25,'INPUT OPTIONS'/1X,T7,I2MPT13390
01340*                  6,T16,'READ MET DATA FROM CARDS',T70,I1/1X,T7,T2,T16,'READ HOURLY EMPT13400
01341*                  7MISSIONS',T70,I1/1X,T7,I2,T16,'SPECIFY SIGNIFICANT SOURCES',T70,I1MPT13410
01342*                  8/1X,T7,I2,T16,'READ RADIAL DISTANCES TO GENERATE RECEPTORS',T70,I1MPT13420
01343*                  9/T25,'PRINTED OUTPUT OPTIONS'/1X,T7,I2,T16,'DELETE EMISSIONS WITH MPT13430
01344*                  AHEIGHT TABLE',T70,I1/1X,T7,I2,T16,'DELETE MET DATA SUMMARY FOR AVGMPT13440
01345*                  B PERIOD',T70,I1/1X,T7,I2,T16,'DELETE HOURLY CONTRIBUTIONS',T70,I1/MPT13450
01346*                  C1X,T7,I2,T16,'DELETE MET DATA ON HOURLY CONTRIBUTIONS',T70,I1/1X,TMPT13460
01347*                  D7,I2,T16,'DELETE FINAL PLUME RISE CALC ON HRLY CONTRIBUTIONS',T70,MPT13470
01348*                  E11)                                                              MPT13480
01349*        541   1470 FORMAT (1X,T7,I2,T16,'DELETE HOURLY SUMMARY',T70,I1/1X,T7,T2,T16,'MPT13490
01350*                  1DELETE MET DATA ON HRLY SUMMARY',T70,I1/1X,T7,T2,T16,'DELETE FINALMPT13500
```

```
01351*                    2 PLUME RISE CALC ON HRLY SUMMARY',T70,I1/1X,T7,I2,T16,'DELETE AVG -MPT13510
01352*                    'PERIOD CONTRIBUTIONS',T70,I1/1X,T7,I2,T16,'DELETE AVERAGING PERIODMPT13520
01353*                    4 SUMMARY',T70,I1/1X,T7,I2,T16,'DELETE AVG CONCENTRATIONS AND HC-5 MPT13530
01354*                    5TABLES',T70,I1/T25,'OTHER CONTROL AND OUTPUT OPTIONS'/1X,T7,I2,T16MPT13540
01355*                    6,'RUN IS PART OF A SEGMENTED RUN',T70,I1/1X,T7,I2,T16,'WRITE PARTMPT13550
01356*                    7AL CONC TO DISK OR TAPE',T70,I1/1X,T7,I2,T16,'WRITE HOURLY CONC TOMPT13560
01357*                    8 DISK OR TAPE',T70,I1/1X,T7,I2,T16,'WRITE AVG-PERIOD CONC TO DISK MPT13570
01358*                    9OR TAPE',T70,I1/1X,T7,I2,T16,'PUNCH AVG-PERIOD CONC ONTO CARDS',T7MPT13580
01359*                    A0,I1)                                                            MPT13590
01360*          542  1480 FORMAT (1H0,2X,'ANEMOMETER HEIGHT = ',F10.2/3X,'WIND PROFILE WITH 'MPT13600
01361*                    1,'HEIGHT EXPONENTS CORRESPONDING TO STABILITY ARE AS FOLLOWS:'/8X,MPT13610
01362*                    2'FOR STABILITY A: ',F4.2/12X,'STABILITY B: ',F4.2/12X,'STABILITY CMPT13620
01363*                    3: ',F4.2,/12X,'STABILITY D: ',F4.2,/12X,'STABILITY E: ',F4.2/12X,'MPT13630
01364*                    4STABILITY F: ',F4.2)                                             MPT13640
01365*          543  1490 FORMAT (1H0,'ANEMOMETER HEIGHT IS:',F10.2/1X,'EXPONENTS FOR POWER-MPT13650
01366*                    1 LAW WIND INCREASE WITH HEIGHT ARE:',F4.2,5('/',F4.2)/' TERRAIN ADMPT13660
01367*                    2JUSTMENTS ARE: ',F5.3,5(',',F5.3)//)                             MPT13670
01368*          544  1500 FORMAT ('1',T90,'POINT SOURCE INFORMATION'//1X,T5,'SOURCE',T23,'EAMPT13680
01369*                    1ST',T31,'NORTH',T39,'SO2(G/SEC)  PART(G/SEC)  STACK  STACK   STACKMPT13690
01370*                    2   STACK',3X,'POTEN. IMPACT',2X,'EFF',3X,'GRD-LVL BUOY FLUX'/1X,T2MPT13700
01371*                    33,'COORD',T31,'COORD','   EMISSIONS    EMISSIONS     HT(M) TEMP(K) DMPT13710
01372*                    4IAM(M)',' VEL(M/SEC) (MICRO G/M**3) HT(M)',3X,'ELEV',6X,'F'/1X,T24,'MPT13720
01373*                    5(USER UNITS)',T116,'USER HT M**4/S**3'/1X,T117,'UNITS'/)         MPT13730
01374*          545  1510 FORMAT (1X,I3,1X,3A4,1X,2F9.2,2F12.2,4F8.1,6PF13.2,0PF9.2,2F9.2)  MPT13740
01375*          546  1520 FORMAT ('0',T3,'SIGNIFICANT ',A4,' POINT SOURCES'//1X,T8,'RANK',T2MPT13750
01376*                    12,'CHI-MAX',T77,'SOURCE NO.'/1X,T17,'(MICROGRAMS/M**3)'/1X)      MPT13760
01377*          547  1530 FORMAT (1X,T9,I3,T18,6PF12.2,T35,I3)                              MPT13770
01378*          548  1540 FORMAT (1X,'HEIGHT ABOVE 100M FOR POINT SOURCE',I4,3X,' HEIGHT=',FMPT13780
01379*                    16.2,' (METERS)','   EMISSIONS=',F10.2,' (G/SEC)')                MPT13790
01380*          549  1550 FORMAT ('0',4X,'TOTAL ',A4,' EMISSION AND CUMULATIVE FRACTION ACCOMPT13800
01381*                    1RDING TO HEIGHT'/1X,T12,'TOTAL POINT   CUMULATIVE '/1X,'HEIGHT(M)MPT13810
01382*                    2 EMISSIONS(G/S)  FRACTION'/1X)                                   MPT13820
01383*          550  1560 FORMAT (1X,T2,I2,' -',I3,T11,F8.2,T26,F7.3,T43,F8.2,T56,F7.3)     MPT13830
01384*          551  1570 FORMAT ('0',T2,'TOTAL',2X,F10.2)                                  MPT13840
01385*          552  1580 FORMAT (1H0,21X,'ADDITIONAL INFORMATION ON SOURCES.')             MPT13850
01386*          553  1590 FORMAT (1H0,'  USER SPECIFIED ',I3,' (NPT) SIGNIFICANT POINT ','SOMPT13860
01387*                    1URCES AS LISTED BY POINT SOURCE NUMBER:'/2X,25I5)                MPT13870
01388*          554  1600 FORMAT ('0',2X,'EMISSION INFORMATION FOR ',I4,' (NPT) POINT SOUR',MPT13880
01389*                    1'CES HAS BEEN INPUT'/2X,I2,' SIGNIFICANT POINT SOURCES(NSIGP) ','AMPT13890
01390*                    2RE TO BE',' USED FOR THIS RUN'/2X,'THE ORDER OF SIGNIFICANCE(IMPS)MPT13900
01391*                    3 FOR 25 OR LESS POINT SOURCES USED IN THIS RUN AS LISTED BY POINT MPT13910
01392*                    4SOURCE NUMBER:'/2X,25I5)                                         MPT13920
01393*          555  1610 FORMAT (2X,'SURFACE MET DATA FROM STATION(ISFC) ',I6,', YEAR(ISFCMPT13930
01394*                    1YR) 19',I2/2X,'MIXING HEIGHT DATA FROM STATION(IMXP) ',I6,', YEAR(MPT13940
01395*                    2IMXYR) 19',I2)                                                   MPT13950
01396*          556  1620 FORMAT (1H0,T21,'RECEPTOR INFORMATION')                           MPT13960
01397*          557  1630 FORMAT (1H0,' MPTER INTERNALLY GENERATES 36 RECEPTORS ','ON A CIRCMPT13970
01398*                    1LE CORRESPONDING TO EACH NON-ZERO ','RADIAL DISTANCE FROM A CENTERMPT13980
01399*                    2 POINT '/1X,T10,'COORDINATES ARE (USER UNITS): (',F8.3,',',F8.3,')'MPT13990
01400*                    3/1X,T10,'RADIAL DISTANCE(S) USER SPECIFIED (USER UNITS): ',5(F11.3MPT14000
```

```
                    8,'  '))                                                    MPT14010
      558     1640  FORMAT (F8.1)                                               MPT14020
      559     1650  FORMAT ('0',' RECEPTOR    IDENTIFICATION  EAST      NORTH      RECEPMPT14030
                    1TOR HT      RECEPTOR GROUND LEVEL'/1X,T30,'COORD',T39,'COORD   ABV LMPT14040
                    2OCAL GRD LVL        ELEVATION'/1X,T71,'(USER UNITS)          (METERMPT14050
                    3S)            (USER HT UNITS)'/1X)                          MPT14060
      560     1660  FORMAT (1X,T3,I3,2A1,8X,2A4,F13.3,F10.3,F10.1,F20.1)         MPT14070
      561     1670  FORMAT (1H0,T3,'* ONE ASTERISK INDICATES THAT THE ASSOCIATED ',MPT14080
                    1CEPTOR(S) HAVE A GROUND LEVEL ELEVATION LOWER ','THAN THE LOWEST SMPT14090
                    2OURCE BASE ELEVATION.'/' CAUTION SHOULD ','BE USED IN INTERPRETINGMPT14100
                    3 CONCENTRATIONS FOR THESE RECEPTORS.'/' **  TWO ASTERISKS ','INDICMPT14110
                    4ATE THAT THE ASSOCIATED RECEPTOR(S) HAVE GROUND LEVEL ','ELEVATIONMPT14120
                    5S ABOVE THE LOWEST STACK TOP.'/'    CONSEQUENTLY','  NO CALCULATIONMPT14130
                    6S WILL BE PERFORMED WITH THIS RECEPTOR.A ','SERIES OF ASTERISKS WIMPT14140
                    7LL INSTEAD APPEAR IN THE OUTPUT.')                           MPT14150
      562     1680  FORMAT (//1X,' THE NUMBER OF   DAYS  PREVIOUSLY COMPLETED EQUAL ',MPT14160
                    1I3,' AND THE LAST   DAY  TO BE COMPLETED IN THIS RUN IS ',I3)  MPT14170
      563     1690  FORMAT ('1INPUT MET DATA  ',I2,'/','I4/1X,T2,'HOUR    THETA     SPEEDMPT14180
                    1   MIXING   TEMP     STABILITY'/1X,T2,'(DEG)     (M/S)   HEIGHT(M) MPT14190
                    2DEG-K)  CLASS'/1X)                                           MPT14200
      564     1700  FORMAT (1X,T3,I2,4F9.2,6X,I1)                               MPT14210
      565     1710  FORMAT ('0','RESULTANT MET CONDITIONS'/1X)                   MPT14220
      566     1720  FORMAT (2X,'WIND DIRECTION=',F7.2,T36,'RESULTANT WIND SPEED =',F7.2MPT14230
                    1/2X,'AVERAGE WIND SPEED=',F7.2,T36,'AVERAGE TEMP= ',F7.2/2X,'WIND PMPT14240
                    2ERSISTENCE=',F6.3,T36,'MODAL STABILITY=',I2)                 MPT14250
      567     1730  FORMAT (1H0,' THIS SEGMENT OF A SEGMENTED RUN HAS COMPLETED ',I5,' MPT14260
                    1(IDAY) DAYS.')                                               MPT14270
      568     1740  FORMAT ('0',T9,'       RECEPTORS'//1X,'RECEPTOR    IDENTIFICATION  MPT14280
                    1EAST      NORTH      RECEPTOR HT      RECEPTOR GROUND LEVEL',T99,'AVGMPT14290
                    2 CONC FOR PERIOD'/1X,T30,'COORD',T39,'COORD   ABV LOCAL GRD LVL   MPT14300
                    3   ELEVATION',T98,'DAY',F4.0,'HR',F3.0,' TO DAY',F4.0,'HR',F3.0/1XMPT14310
                    4,T71,'(USER UNITS)          (METERS)          (USER HT UNITS)',T100,'MPT14320
                    5(MICROGRAMS/M**3)'/1X)                                       MPT14330
      569     1750  FORMAT (1X,T3,I3,1X,2A4,5X,F8.2,2X,F8.2,F10.1,F20.1,T110,A1,6PF7.MPT14340
                    12)                                                           MPT14350
      570     1760  FORMAT (1H0,T41,'FIVE HIGHEST ',I2,'-HOUR ',A4,' CONCENTRATIONS(EMPT14360
                    1NDING ON JULIAN DAY, HOUR)'/1X,T55,'(MICROGRAMS/M**3)'//2X,'RECEPTMPT14370
                    2OR ',T38,4(I1,2X),I1,/1X)                                    MPT14380
      571     1770  FORMAT (1H ,2X,I3,'(','F7.2,',' ','F7.2,')',2(1X,A1,6PF9.2,2X,'(',I3,'MPT14390
                    1,',I2,')'),3(2X,6PF9.2,2X,'(',I3,',',I2,')'))                MPT14400
                C                                                                 MPT14410
      572           END                                                           MPT14420
```

SYMBOL		REFERENCES		
1	-	3880		
10	-	23	25*	
20	-	30	31*	
30	-	28	32*	
40	-	26	33*	
50	-	39	42*	
60	-	48	51*	
70	-	50	53*	
80	-	53	59*	
90	-	59	63*	
100	-	63	66*	
110	-	69	72*	
120	-	73	75*	
130	-	74	77*	
140	-	71	76	79*
150	-	81*	115	
160	-	82	87*	
170	-	89	93*	
180	-	96	99*	
190	-	100	103*	
200	-	98	102	104*
210	-	105	107*	
220	-	106	109*	
230	-	84	88	116*
240	-	117	120*	
250	-	124	125	128*
260	-	122	131*	
270	-	133	135*	
280	-	120	136*	
290	-	138	141*	
300	-	140	144*	
310	-	143	145*	
320	-	137	146*	
330	-	153	159*	
340	-	136	161*	
350	-	165	168*	
360	-	173	175*	
370	-	162	168	177*
380	-	177	178*	
390	-	172	176	179*
400	-	181	182*	
410	-	180	183*	
420	-	183	185*	
430	-	189	192*	
440	-	192	195*	
450	-	186	196*	
460	-	201	202	204*
470	-	210	218*	

480	-	206	219*		
490	-	224	227*		
500	-	227	230*		
510	-	222	231*		
520	-	198	221	232*	240
530	-	234 RD	236*		
540	-	233	238*		
550	-	235	239	241*	
560	-	243	246*		
570	-	242	247*		
580	-	247	250*		
590	-	251	252*		
600	-	253	255*		
610	-	255	258	261	264*
620	-	269	270*		
630	-	267	272*		
640	-	266	271	274*	
650	-	277	278*		
660	-	275	280*		
670	-	274	279	282*	
680	-	285	286*		
690	-	282	283	287*	
700	-	289	290*		
710	-	288	291*		
720	-	292*	445	447	
730	-	297	299*		
740	-	298	301*		
750	-	302	306*		
760	-	295	307*		
770	-	309	312*	450	453
780	-	316	317*		
790	-	321	323	329*	
800	-	318	330	345*	
810	-	355	357	360*	
820	-	363	365*		
830	-	364	367*		
840	-	368	369*		
850	-	366	371*		
860	-	346	373*		
870	-	373	376*		
880	-	378	379*		
890	-	376	380*		
900	-	381	383*		
910	-	385	388*		
920	-	390	391*		
930	-	388	392*		
940	-	402	405	408*	
950	-	409	411*		
960	-	414	415*		
970	-	413	416*		

980	-	420	423*		
990	-	424	427*		
1000	-	428	431*		
1010	-	412	431	433	436*
1020	-	383	436	438*	
1030	-	444	448*		
1040	-	446	454*		
1050	-	443	457*		
1060	-	458	461*		
1070	-	467	469	472*	
1080	-	475	476*		
1090	-	484	487*		
1100	-	483	487	490*	
1110	-	496	497*		
1120	-	495	499*		
1130	-	478	502*		
1140	-	456	457	503*	
1150	-	503	506*		
1160	-	506	509*		
1170	-	509	512*		
1180	-	36RO	513*		
1200	-	83RO	234RO	514*	
1210	-	87RO	515*		
1220	-	163RO	516*		
1230	-	223RO	517*		
1240	-	238RO	518*		
1250	-	80WR	519*		
1260	-	77WR	520*		
1270	-	85WR	521*		
1280	-	118WR	522*		
1290	-	166WR	523*		
1300	-	169WR	524*		
1310	-	190WR	525*		
1320	-	193WR	526*		
1330	-	225WR	527*		
1340	-	236WR	528*		
1350	-	248WR	529*		
1360	-	262WR	530*		
1370	-	299WR	531*		
1380	-	310WR	532*		
1390	-	406WR	533*		
1400	-	37WR	462WR	534*	
1410	-	45WR	535*		
1420	-	49WR	536*		
1430	-	51WR	537*		
1440	-	58WR	538*		
1450	-	60WR	539*		
1460	-	66WR	540*		
1470	-	67WR	541*		
1480	-	70WR	542*		

```
     1490    -    72WR    583*
     1500    -    79WR    584*
     1510    -   118WR    585*
     1520    -   132WR    586*
     1530    -   138WR    587*
     1540    -   142WR    588*
     1550    -   147WR    589*
     1560    -   152WR    158WR    550*
     1570    -   160WR    551*
     1580    -   161WR    552*
     1590    -   168WR    553*
     1600    -   179WR    554*
     1610    -   195WR    555*
     1620    -   197WR    556*
     1630    -   205WR    557*
     1640    -   215      558*
     1650    -   250WR    559*
     1660    -   252WR    560*
     1670    -   254WR    561*
     1680    -   257WR    562*
     1690    -   331WR    563*
     1700    -   333WR    564*
     1710    -   371WR    565*
     1720    -   372WR    566*
     1730    -   455WR    567*
     1740    -   474WR    568*
     1750    -   476WR    569*
     1760    -   493WR    570*
     1770    -   498WR    571*
     A       -   110=     112
A            UMMY VARIABLE
     ANAME   -    8DI     140A    218
ANAME(36)  ALPHANUMERIC INDICATORS FOR EACH 10 DEGREES OF AZIMUTH
     ANGARC  -   349
ANGARC     SUBROUTINE TO DETERMINE THE PROPER ARCTANGENT
     ATIME   -    9DI     150A    57=     498
ATIME      OPTIONAL AVERAGING TIME FOR HIGH-FIVE TABLE
     B       -   111=     112
B          DUMMY VARIABLE
     BLNK    -   10DA     459     460     477     500     501
BLNK       AN ALPHANUMERIC BLANK
     CELM    -    5CO     38RD    60WR    90
CELM       MULTIPLIER TO CONVERT USER HEIGHT UNITS TO METERS.
     CENTX   -   199RD    205WR   212
CENTX      EAST COORDINATE ABOUT WHICH POLAR COORDINATE RECEPTORS ARE CENTERED (USER UNITS).
     CENTY   -   199RD    205WR   213
CENTY      NORTH COORDINATE ABOUT WHICH POLAR COORDINATE RECEPTORS ARE CENTERED (USER UNITS).
     CONC    -    7CO     29=     475=    415
CONC(180,5)  CUMULATIVE SUMS OF CONCENTRATION FOR AVERAGING TIMES
     CONONE  -   38RD     43
```

```
CONONE     MULTIPLIER CONSTANT TO CONVERT LENGTH IN USER UNITS TO KM
    CONTER  -      8DI     68RD     72WR     74       74       401
CONTER(6)  TERRAIN ADJUSTMENT FACTORS FOR EACH STABILITY.
    CONTWO  -      5CO     83=      85WR
CONTWO     MULTIPLIER CONSTANT TO CONVERT LENGTH IN USER UNITS TO KM. THIS IS SAME AS CONONE.
    COS     -      209     335      400
COS        LIBRARY FUNCTION
    COSRAD  -      209=    213
COSRAD     COSINE OF 10 DEGREE AZIMUTHS
    COST    -      5CO     335=     338      400=
COST       COSINE OF WIND DIRECTION FOR THIS HOUR
    CTER    -      5CO     401=
CTER       TERRAIN ADJUSTMENT FACTOR FOR THIS HOUR.
    D       -      93=     94       98
D          STACK TOP INSIDE DIAMETER
    DAY     -      293=    298
DAY(5)     BEGINNING JULIAN DAY FOR AN AVERAGING TIME.
    DAY1    -      296RD   298      301      322RD    326      387
DAY1       JULIAN DAY OF MET DATA.
    DAY1A   -      46=     259RD    454WR    478WR
DAY1A      BEGINNING JULIAN DAY FOR LENGTH OF RUN.
    DAY2    -      320=    328=     478WR
DAY2       ENDING JULIAN DAY FOR LENGTH OF RUN.
    DELH    -      4CO
DELH       PLUME RISE.
    DELM    -      315=    339=     339      348=     348      349      352      352
DELM       EAST  COMPONENT OF RESULTANT WIND FOR NAVG HOURS.
    DELN    -      314=    340=     340      347=     347      349      352      352
DELN       NORTH COMPONENT OF RESULTANT WIND FOR NAVG HOURS.
    DSAV    -      3CO     112=     114WR    125      126      131
DSAV(250)  ARRAY OF DISTANCES TO FINAL RISE(KM)
    DUM     -      83RD    88       234RD    235      494=     497
DUM        DUMMY VARIABLE
    DUMR    -      8DI     296RD
DUMR(24)   DUMMY VARIABLE TO SKIP PAST WIND DIRECTION TO 10 DEGREES.
    ELHN    -      5CO     61=      91       91-      244      245
ELHN       ELEVATION OF LOWEST STACK TOP IN INVENTORY, IN USER HEIGHT UNITS.
    ELOW    -      62=     92       92=      244
ELOW       GROUND-LEVEL ELEVATION OF SHORTEST STACK
    ELP     -      5CO     87RD     90       92       92       114WR
ELP(NPT)   SOURCE GROUND-LEVEL ELEVATION (USER HEIGHT UNITS).
    ELR     -      3CO     217=     231=     238RD    244      244      245      252WR    476WR
ELR(180)   RECEPTOR GROUND-LEVEL ELEVATION (USER HEIGHT UNITS).
    ELRDUM  -      9DI     223RD    230
ELRDUM(5)  RECEPTOR ELEVATIONS FOR AN AZIMUTH FOR UP TO FIVE DISTANCES (USER HEIGHT UNITS).
    ENDP    -      12DA    88       88
ENDP       ALPHANUMERIC FIELD TO CHECK AGAINST WORDS END P AND ENDR.
    ENDR    -      12DA    235      239
ENDR       ALPHANUMERIC FIELD TO CHECK FOR END OF RECEPTOR INPUT
    EXPOS   -      1CO
```

```
EXPOS      COMMON BETWEEN MAIN AND BLOCK DATA
    F        -     99=     100     101     103     114WR
F          BRIGGS BUOYANCY FLUX PARAMETER
    FLOAT    -    207     370     370
FLOAT      LIBRARY FUNCTION
    H        -    400
H          EFFECTIVE POINT SOURCE HEIGHT(METERS)
    HAFL     -    38RD     48      51WR    52
HAFL       POLLUTANT HALF-LIFE (SECONDS)
    HANE     -     50     68RD     70WR    72WR
HANE       ANEMOMETER HEIGHT (METERS)
    HC       -    139=    140
HC         TEMPORARY HEIGHT CLASS AT 5 METER INTERVALS
    HC1      -     100    106
HC1(10)    HEIGHT CLASS DESIGNATIONS FOR RAMBLK DATA
    HF       -     97=    101=    103=    104     106     112
HF         FINAL PLUME RISE(METERS) FOR CURRENT POINT SOURCE
    HI1      -    481=    484     485=
HI1        HIGHEST CONCENTRATION FOR AVERAGING TIME.
    HI2      -    482=    487     488-
HI2        SECOND HIGHEST CONCENTRATION FOR AVERAGING TIME.
    HIMAX    -    465=    469     471=
HIMAX      HIGHEST AVERAGE CONCENTRATION.
    HL       -    400     395=
HL         MIXING HEIGHT(METERS) FOR THIS HOUR
    HLH      -    8DI     296RD    306
HLH(2,24)    RURAL AND URBAN MIXING HEIGHTS (METERS) FOR 24 HOURS
    HMAXA    -     70     31=     259RD   458WR   481     482     484     485     487     488
                  497=    497     498WR   498WR
HMAXA(3,5,180,5) HIGHEST FIVE CONCS. AND ASSOCIATED DAY AND HR, FOR EACH RECEPTOR, FOR DIF. AVERAGING TIMES.
    HR1      -    47=     259RD   454WR   474WR
HR1        BEGINNING HOUR FOR LENGTH OF RUN.
    HR2      -    463=    474WR
HR2        ENDING HOUR FOR LENGTH OF RUN.
    HSAV     -     30     104=    114WR
HSAV(250)    ARRAY OF PLUME RISES ALREADY CALCULATED(METERS)
    I        -     23      24      25      26      27      29      31      48RD    48RD    66WR
                   66WR    66WR    67WR    67WR    67WR    73      74      78      87RD    87RD
                   87RD    87RD    122     129     130     133     138WR   138WR   138WR   137
                  140     142WR   142WR   142WR   144     145     153     154     156     157
                  157     158WR   163RD   163RD   164WR   164WR   173     178     177     178
                  178     179WR   179WR   181     182     182     183     184     185     206
                  207     211     218     222     228     225WR   229     240     273WR   273WR
                  277     281WR   281WR   285     289     316     317     318     319     323
                  331     355     356     359     363     364     378     370     382WR   382WR
                  382WR   382WR   390     391     404RD   404RD   410WR   410WR   493WR   493WR
I          DUMMY VARIABLE FREQUENTLY USED
    ID       -    188RD   189     190WR
ID         SURFACE METEOROLOGICAL STATION IDENTIFICATION FROM DISK
    IDATE    -     30     38RD    38RD    45WR    45WR    46      287     297     299WR   299WR
```

```
                301=    320     324=    327=    328     331WR   387=    403     403     410WR
                417     439=
IDATE(2) YEAR AND STARTING JULIAN DAY TO APPEAR ON OUTPUT.
    IDATP   -   404RD   405     406WR
IDATP     DATE(YYDDDHH) ON HOURLY POINT SOURCE EMISSION RECORD
    IDAY    -   256RD   257WR   258     261     262WR   264     267     269     275     283
                288     287=    288     289     292=    292     293     299WR   446     454WR
                455WR
IDAY      NUMBER OF DAYS PREVIOUSLY PROCESSED BY A PRECEDING RUN.
    IDAYS   -   259RD   261     262WR
IDAYS     DATE OF LAST DAY PROCESSED AND WRITTEN TO SUMMARY INFO FILE
    IDCK    -   403=    405     406WR
IDCK      INTERNAL DATE USED FOR CHECKING DATE ON HOURLY EMISSION
    IDM     -   188RD   192     193WR
IDM       IDENTIFICATION FOR RADIOSONDE STATION USED TO DETERMINE MIXING HEIGHT FROM DISK.
    IDUM    -   223RD   224     225WR
IDUM      AZIMUTH INDICATOR
    IFREQ   -   8DI     10DA    317=    344=    344     356     364     369
IFREQ(7) FREQUENCY TABLE OF OCCURRENCE OF EACH STABILITY CLASS.
    IH      -   105     106     108=    109
IH        DO INDEX TO DETERMINE HEIGHT INDEX
    IH1     -   148=    152WR   155=    158WR
IH1       HEIGHT VALUES FOR TABLE OUTPUT
    IH2     -   149=    152WR   154=    155     158WR
IH2       HEIGHT VALUES FOR TABLE OUTPUT
    IHR     -   7C0     498WR   498WR
IHR       ENDING HOUR FOR HIGH-FIVE CONCENTRATION
    IHSTRT  -   38RD    45WR    47      307     310WR   325=    374     375
IHSTRT    START HOUR OF RUN
    IKST    -   6C0     296RD   303     303=    322RD   329     329=    333WR   343     397
IKST(24) ARRAY OF 24 STABILITY CLASSES.
    ILH     -   383     384     386
ILH       DO LOOP INDEX ON HOUR LOOP
    IM1     -   150=    156=    157
IM1       DUMMY VARIABLE FOR EMISSIONS WITH HEIGHT TABLE.
    IMO     -   296RD
IMO       MONTH ON MET DATA.
    IMPS    -   8DI     129=    134WR   178     178
IMPS(25) ARRAY OF ORIGINAL POINT SOURCE NUMBERS IN ORDER OF SIGNIFICANCE
    IMXD    -   187RD   192     193WR   195WR
IMXD      IDENTIFICATION FOR RADIOSONDE STATION USED TO DETERMINE MIXING HEIGHT. FROM CARD INPUT.
    IMXYR   -   187RD   192     193WR   195WR
IMXYR     YEAR FOR MIXING HEIGHT DATA - 2 DIGITS FROM CARD INPUT.
    IN      -   34=     36RD    38RD    44RD    68RD    83RD    87RD    163RD   187RD   199RD
                223RD   234RD   238RD   256RD   322RD
IN        INPUT UNIT NUMBER(5) - CARD READER.
    INPT    -   163RD   163RD   164WR   164WR   165     166WR   168     169     170
INPT      THE NUMBER OF USER SPECIFIED SIGNIF. POINT SOURCES. COUNT
    IO      -   6C0     35=     37WR    40WR    45WR    49WR    51WR    58WR    60WR    66WR
                67WR    70WR    72WR    77WR    79WR    85WR    114WR   118WR   132WR   134WR
```

```
                    182WR   187WR   192WR   158WR   160WR   161WR   168WR   186WR   189WR   179WR
                    190WR   193WR   195WR   197WR   205WR   225WR   236WR   248WR   250WR   252WR
                    254WR   257WR   262WR   299WR   310WR   331WR   333WR   371WR   372WR   406WR
                    455WR   462WR   474WR   476WR   493WR   498WR
IO        UNIT NUMBER(6) - PRINTER OUTPUT
    IOPT    -       2CO     48RD    53      59      64 =    65 =    66WR    67WR    69      89
                    136     162     190     186     198     221     242     253     255     265
                    266     274     282     288     295     321     339     346     373     381
                    402     409     412     436     436     445     457     503     506     509
IOPT(25)  OPTIONS (SEE INPUT CARD 5.)
    IP      -       42 =    45WR    132WR   147WR   493WR
IP        DUMMY VARIABLE USED FOR PROPER POLLUTANT TITLE
    IP1     -       361 =   363
IP1       DUMMY VARIABLE USED IN DETERMINING MODAL STABILITY
    IPOL    -       3CO     38RD    42      112     142WR   144     145     192     404RD
IPOL      INDEX FOR POLLUTANT, 3 = SO2 , 4 = PARTICULATE.
    IPSIGS  -       5CO     113=    185=
IPSIGS(250)  ARRAY CONTAINING RANK FOR EACH POINT SOURCE IN TERMS OF SIGNIFICANCE.
    IQ      -       302     303     303     304     304     305     305     305     306     306
IQ        LOOP INDEX FOR MET DATA
    IRANK   -       6CO
IRANK(180)  RANK OF CONCENTRATION FOR THIS RECEPTOR.
    IS      -       109=    110     111
IS        HEIGHT CLASS INDEX.
    ISFCD   -       187RD   189     190WR   195WR
ISFCD     SURFACE METEOROLOGICAL STATION IDENTIFICATION - FROM CARD INPUT.
    ISFCYR  -       187RD   189     190WR   195WR
ISFCYR    YEAR FOR SURFACE DATA - 2 DIGITS. FROM CARD INPUT.
    ISKIP   -       268=    269     276=    277     284=    285
ISKIP     NUMBER OF RECORDS TO BE SKIPPED
    ISTDAY  -       326=    327     439
ISTDAY    START DAY OF CURRENT AVERAGING PERIOD
    IYEAR   -       188RD   189     190WR
IYEAR     YEAR FOR SURFACE DATA - 2 DIGITS. FROM DISK.
    IYM     -       188RD   192     193WR
IYM       YEAR FOR MIXING HEIGHT DATA - 2 DIGITS FROM DISK.
    J       -       28      29      31      114WR   114WR   124     125     126     127     138
                    139     144     144     152WR   152WR   158WR   158WR   170=    172     173
                    184=    185     201     202     210     211     212     213     215     223RD
                    223RD   227     228     230     239RD   238RD   243     244     244     244
                    245     245     252WR   252WR   273WR   273WR   281WR   281WR   368     369
                    369     458     459     460     476WR   476WR   496     497     497     498WR
                    498WR   498WR   498WR   498WR   498WR   498WR   498WR   498WR
J         DUMMY VARIABLE FREQUENTLY USED
    JA      -       200=    203=    203     210     220     223RD   227
JA        DUMMY VARIABLE FOR GENERATING POLAR COORDINATE RECEPTORS.
    JDAY    -       7CO     417=
JDAY      DATE WHICH CONCENTRATION HAS BEEN CALCULATED
    JHR     -       319=    322RD   322RD   322RD   322RD   322RD   325     329     329
                    332     333WR   333WR   333WR   333WR   333WR   333WR   336     341     343
```

```
JHR        HOUR SUBSCRIPT USED WITH MET DATA
    JYR     -    296RD    297      299WR    322RD    328
JYR        YEAR OF MET DATA.
    K       -    30       31       114WR    114WR    171=     174      175=     175      228=     229
                 251      252WR    252WR    252WR    252WR    252WR    252WR    252WR    252WR    376
                 377      379      388      389      391      413      415      415      415      416
                 416      416      467      468      468      469      470      471      475      476WR
                 476WR    476WR    476WR    476WR    476WR    476WR    476WR    483      484      485
                 486      487      488      489      495      497      497      498WR    498WR    498WR
                 498WR    498WR    498WR    498WR    498WR    498WR    498WR
K          DUMMY VARIABLE FREQUENTLY USED
    K1      -    479=     486=     491      500
K1         DUMMY VARIABLE FOR STORING ASTERISK.
    K2      -    480=     489=     492      501
K2         DUMMY VARIABLE FOR STORING ASTERISK.
    KMX     -    466=     470=     473      477
KMX        DUMMY VARIABLE FOR STORING ASTERISK.
    KST     -    400      343=     344      348      362=     370=     372WR    397=     401
KST        STABILITY CLASS FOR THIS HOUR.
    KSUM    -    367=     369=     369      370
KSUM       VARIABLE USED IN DETERMINING AVERAGE  STABILITY
    L       -    229=     230      414      415      415      478      481      492      484      485
                 487      488      493WR    494      497      497      498WR    498WR    498WR    498WR
                 498WR    498WR
L          DUMMY VARIABLE USED IN PRINTING POINT IDENTIFICATION
    LDRUN   -    256RD    257WR    446
LDRUN      DAY NUMBER OF LAST DAY TO BE PROCESSED IN THIS RUN
    LH      -    300      384=     385      386=     387      393      394      395      396      397
                 403      410WR
LH         INDEX USED FOR SUBSCRIPTING DATA IN HOUR LOOP
    LINE1   -    600      36RD     37WR     265WR    272WR    280WR    462WR
LINE1(14)  FIRST LINE OF TITLE - USUALLY IDENTIFIES USER AND AFFILIATION.
    LINE2   -    600      36RD     37WR     265WR    272WR    280WR    462WR
LINE2(14)  SECOND LINE OF TITLE - CAN IDENTIFY EMISSIONS SOURCE AND DATE.
    LINE3   -    600      36RD     37WR     265WR    272WR    280WR    462WR
LINE3(14)  THIRD LINE OF TITLE - CAN INDICATE METEOROLOGICAL DATA LOCATION AND PERIOD OF RECORD.
    LMAX    -    127=     129      131
LMAX       TEMPORARY NUMBER OF SOURCE WITH HIGHTEST CONCENTRATION
    LSMAX   -    354=     357      358-     368
LSMAX      MAXIMUM STABILITY CLASS FREQUENCY.
    LST     -    356=     357      358
LST        VARIABLE USED IN DETERMINING MODAL STABILITY
    LSTAB   -    359=     361      362
LSTAB      VARIABLE USED IN DETERMINING MODAL STABILITY
    MAXP    -    130A     82       85WR
MAXP       MAXIMUM NUMBER OF POINT SOURCES, SECOND DIM. OF SOURCE
    MO      -    600
MO         COMMON BETWEEN MAIN AND OUTHP
    MOD     -    386      451
MOD        LIBRARY FUNCTION
```

```
      MP        -      5C0
MP          COMMON BETWEEN MAIN AND PTR
      MPO       -      3C0
MPO         COMMON BETWEEN MAIN, PTR, AND OUTHR
      MPOR      -      2C0
MPOR        COMMON BETWEEN MAIN, PTR, OUTHR, AND RCP
      MPR       -      4C0
MPR         COMMON BETWEEN MAIN, PTR, AND RCP
      MPS       -      6C0    163RD    164WR    169      174=     179=     179WR    199
MPS(25)     POINT SOURCE NUMBERS USER WANTS TO CONSIDER AS SIGNIFICANT
      MR        -      7C0
MR          COMMON BETWEEN MAIN AND RANK
      NAV5      -      38RD     55       55       55       55       55       56       57       433
NAV5        ADDITIONAL AVERAGING-TIME FOR HIGH-FIVE TABLE (2,4,6, OR 12).
      NAVG      -      3C0      38RD     45WR     268      265WR    272WR    280WR    308      347      348
                     350      351      370      375      442      448      449      452
NAVG        NUMBER OF HOURS IN THE AVERAGING PERIOD.
      NAVT      -      54=      55=      58WR     418      431      478
NAVT        NUMBER OF AVERAGING TIMES TO BE CONSIDERED.
      NB        -      7C0      307=     308      309      318      323      331      378=     383      448=
                     448      450      451=     451      452      463
NB          THE BEGINNING HOUR OF THE CURRENT AVERAGING TIME LOOP
      NDAY      -      7C0      498WR    498WR
NDAY        DAY THAT HIGH-FIVE CONCENTRATION OCCURS ON
      NE        -      308=     318      375=     383      439      449=     449      452=
NE          THE ENDING HOUR OF THE CURRENT LOOP
      NHR       -      18=      259RD    411-     411      459WR    464      458
NHR         TOTAL NUMBER OF HOURS PROCESSED.
      NHRS      -      294=     442=     442      444
NHRS        COUNT ; USED TO DETERMINE WHEN A DAY (24 HOURS) IS COMPLETE
      NP        -      17=      264=     276      441=     441      443
NP          CURRENT NUMBER OF COMPLETED PERIODS
      NP24      -      21=      427=     427      428      430=
NP24        COUNT OF HOURS PROCESSED IN 24-HOUR AVERAGING TIME.
      NP3       -      19=      419=     419      420      422=
NP3         COUNT OF HOURS PROCESSED IN 3-HOUR AVERAGING TIME.
      NP8       -      20=      423=     423      424      426=
NP8         COUNT OF HOURS PROCESSED IN 8-HOUR AVERAGING TIME.
      NPER      -      38RD     45WR     265WR    272WR    280WR    443
NPER        THE NUMBER OF AVERAGING PERIODS TO BE RUN.
      NPT       -      7C0      80=      81=      81       82       87RD     87RD     87RD     88       90
                     90       92       92       93       94       94       95       97       99       101
                     107      108      112      112      113      114WR    114WR    114WR    114WR    114WR
                     114WR    116=     116      117      118WR    121      121      124      137      179WR
                     181      382WR    404RD
NPT         NUMBER OF POINT SOURCES, COUNT
      NPX       -      22=      432=     432      433      435=
NPX         COUNTER FOR OPTIONAL HIGH-FIVE AVERAGING TIME
      NR        -      7C0
NR          IN COMMON WITH SUBROUTINE RANK
```

```
    NRECEP  -     3C0    16=    196=    211=    212     213     214     215     216     217
                 220=    232=    232     233     238RD   238RD   238RD   238RD   238RD   239
                 241=    241     243     247     248WR   251     273WR   273WR   273WR   281WR
                 281WR   281WR   376     382WR   382WR   382WR   388     410WR   413     458
                 467     475     483     495
NRECEP   TOTAL NUMBER OF RECEPTORS
    NSIGP   -     6C0    38RD    39      40WR    45WR    63      120     121     121=    122
                 133     165     166WR   172     173     177     179WR   179WR   183
NSIGP    NO. OF SIGNIFICANT POINT SOURCES.
    NTIME   -     9DI    15DA    56=     493WR
NTIME(5) LENGTH OF AVERAGING TIMES IN HOURS.
    OUTAVG  -     480
OUTAVG    ENTRY POINT IN OUTHR
    OUTHR   -     437
OUTHR     SUBROUTINE FOR OUTPUT
    PCHI    -     3C0    377=
PCHI(180)  CONCENTRATION FOR AVERAGING PERIOD AT EACH RECEPTOR IN GRAMS PER CUBIC METER.
    PERSIS  -     353=   372WR
PERSIS   WIND PERSISTENCE FOR NAVG HOURS. (RESULTANT SPEED/AVG. SPEED)
    PHCHI   -     3C0    389=    490WR   415     416
PHCHI(180)  SAME AS PCHI  BUT FOR THIS HOUR ONLY.
    PHSIGS  -     3C0    391=
PHSIGS(180,26)  SAME AS PSIGS BUT FOR THIS HOUR ONLY.
    PL      -     5C0    68RD    70WR    72WR
PL(6)     EXPONENTS FOR WIND PROFILE FOR EACH STABILITY CLASS.
    PNAME   -     8DI    87RD    88      114WR
PNAME(2,250)  12 CHARACTER POINT SOURCE IDENTIFICATION.
    PSAV    -     5C0    130=    134WR   182=
PSAV(250)  ORIGINAL ANNUAL EMISSION RATE FOR ALL SOURCES.
    PSIGS   -     3C0    379=
PSIGS(180,26)  PARTIAL CONC. DUE TO EACH SIGNIF. POINT SOURCE AT
                 ACH RECEPTOR FOR AVERAGING PERIOD.
    PTR     -     408
PTR       SUBROUTINE TO CALC CONC FROM POINT SOURCES
    PXUCOF  -     1C0    110
PXUCOF(6,9)  POINT SOURCE CONCENTRATION COEFFICIENTS FROM RAMBLK
    PXUEXP  -     1C0    111
PXUEXP(6,9)  POINT SOURCE CONCENTRATION EXPONENTS FROM RAMBLK
    QHL     -     6C0    306=    322RD   333WR   395
QHL(24)  ARRAY OF 24 HOURLY MIXING HEIGHTS(METERS).
    QTEMP   -     6C0    296RD   322RD   333WR   341     396
QTEMP(24)  ARRAY OF 24 AMBIENT AIR TEMPERATURES(KELVIN)
    QTHETA  -     6C0    296RD   304=    304     305     305-    305     322RD   332     333WR
                 393
QTHETA(24)  ARRAY OF 24 WIND DIRECTIONS (DEGREES)
    QU      -     6C0    296RD   322RD   333WR   336     394
QU(24)   ARRAY OF 24 WIND SPEEDS (METERS/SECOND)
    RADIK   -     207=   208     209
RADIK     AZIMUTH ANGLE IN RADIANS TO GENERATE POLAR COORDINATE
            RECEPTORS.
```

```
    RADIL    -    8DI    199RD    202    205WR    212    213    215
RADIL(5)  RADIAL DISTANCES TO GENERATE POLAR COORDINATE RECEPTORS (USERS UNITS)
    RANK     -    418    421    425    429    430
RANK      SUBROUTINE TO RANK CONCENTRATIONS
    RC       -    4C0
RC        RELATIVE CONCENTRATION, CHI/Q.
    RNAME    -    6C0    218=    215    238RD    239    252WR    476WR
RNAME(2,180)  8 DIGIT ALPHANUMERIC DESCRIPTOR OF RECEPTOR.
    RREC     -    3C0    212=    238RD    252WR    273WR    281WR    392WR    476WR    498WR
RREC(180)  EAST COORDINATE OF RECEPTOR (USER UNITS).
    SIGMAX   -    123=    125    126=    130
SIGMAX    DUMMY VARIABLE TO RANK SOURCE IMPACT.
    SIN      -    208    338    399
SIN       LIBRARY FUNCTION
    SINRAD   -    208=    212
SINRAD    SINE OF 10 DEGREE AZIMUTHS
    SINT     -    5C0    334=    337    399=
SINT      SIN OF WIND DIRECTION FOR THIS HOUR
    SOURCE   -    5C0    87RD    90    93    98=    98    95    97    99    101
                  103    112    114WR    180    182WR    182WR    184    185    192    408RD
SOURCE(1,NPT)  EAST  COORDINATE OF POINT SOURCE (USER UNITS)
SOURCE(2,NPT)  NORTH COORDINATE OF POINT SOURCE (USER UNITS)
SOURCE(3,NPT)  SULFUR DIOXIDE EMISSION RATE (GRAMS/SECOND)
SOURCE(4,NPT)  PARTICULATE EMISSION RATE (GRAMS/SECOND)
SOURCE(5,NPT)  PHYSICAL STACK HEIGHT (METERS)
SOURCE(6,NPT)  STACK GAS TEMPERATURE (KELVIN)
SOURCE(7,NPT)  STACK INSIDE TOP DIAMETER (METERS)
SOURCE(8,NPT)  STACK GAS EXIT VELOCITY (METERS/SECOND)
SOURCE(9,NPT)  BRIGGS F WITHOUT TEMP, THAT IS: 3.12130*VF
    SQRT     -    352
SQRT      LIBRARY FUNCTION
    SREC     -    3C0    213=    238RD    252WR    273WR    281WR    392WR    476WR    498WR
SREC(180)  NORTH COORDINATE OF RECEPTOR (USER UNITS).
    STAR     -    6C0    13DA    244=    245=    252WR    252WR    459=    460=    473=    476WR
                  477=    491=    492=    498WR    500=    501=
STAR(5,180)  ARRAY TO STORE ASTERISKS TO INDICATE RECEPTORS WITH
             HIGHEST AND SECOND HIGHEST CONCENTRATIONS.
    STR      -    13DA    244    245    473    491    492
STR       AN ALPHANUMERIC ASTERISK.
    SUM      -    9DI    27=    259RD    416=    416    454WR    468=    468    465    468=
                  468    469    471    476WR
SUM(180)  AN ARRAY TO CALCULATE AVERAGE CONCENTRATION.
    SY       -    8C0
SY        SIGMA Y, STANDARD DEVIATION OF CONCENTRATION IN THE
          CROSSWIND DIRECTION(METERS)
    SZ       -    8C0
SZ        SIGMA Z, STANDARD DEVIATION OF CONCENTRATION IN THE
          VERTICAL DIRECTION(METERS)
    TABLE    -    8DI    24=    25=    144=    144    145=    145    151=    151    151
                  152WR    157=    157    157    157    158WR    160WR
```

```
TABLE(2,21)  ARRAY CONTAINING FREQUENCY DISTRIBUTIONS
     TEMP    -     5C0    313=    341=    341     351=    351     372WR    396=
TEMP      AVERAGE AMBIENT AIR TEMPERATURE FOR NAVG HOURS. ALSO
           TEMPERATURE FOR THIS HOUR(KELVIN)
     THETA   -    349=    372WR   393=    398
THETA     RESULTANT WIND DIRECTION FOR NHOURS(DEGREES).ALSO WIND
           DIRECTION FOR THIS HOUR
     TITLE   -     8DI     110A    45WR    132WR   147WR   493WR
TITLE(2) TITLE(1)=' SO2  ', TITLE(2)=' PART '
     TLOS    -     5C0     52=
TLOS      PARTIAL COMPUTATION RELATED TO POLLUTANT LOSS.
     TOM     -    90=     91      91
TOM       DUMMY VARIABLE TO FIND LOWEST SOURCE HEIGHT.
     TRAD    -    332=    338     335     398=    399     400
TRAD      ANGLE OF THE WIND THIS HOUR IN RADIANS.
     TS      -    95=     96      99      99
TS        STACK TEMPERATURE(KELVIN)
     U       -    5C0     312=    342=    342     350=    350     353     372WR    394=
U         AVERAGE WIND SPEED. ALSO WIND SPEED FOR THIS HOUR(METERS/SEC)
     UPL     -    4C0
UPL       WIND SPEED AT STACK HEIGHT(METERS/SECOND)
     UR      -    337=    339
UR        EAST COMPONENT OF THE WIND FOR THIS HOUR.(METERS/SEC)
     URES    -    336=    337     338     342     352=    353     372WR
URES      RESULTANT WIND SPEED(METERS/SEC)
     VR      -    338=    340
VR        NORTH COMPONENT OF THE WIND FOR THIS HOUR.(METERS/SEC)
     X       -    4C0
X         UPWIND DISTANCE FROM RECEPTOR TO SOURCE (KILOMETERS).
     Y       -    4C0
Y         CROSSWIND DISTANCE FROM RECEPTOR TO SOURCE(KILOMETERS).
     Z       -    4C0
Z         RECEPTOR HEIGHT(METERS)
     ZR      -    3C0     216=    238RD   252WR   476WR
ZR(180)  RECEPTOR HEIGHT ABOVE LOCAL GROUND LEVEL.
```

```
02388*          1          BLOCK DATA                                                    DAT00010
02389*                C** *COEFFICIENTS GENERATED WITH RURAL SIGMAS USING PGYZ            DAT00020
02390*                C** *RELATIVE CONC. NORMALIZED FOR WIND SPEED FROM PT SOURCE, QHI*U/Q, = DAT00030
02391*                C** *     PXUCOF(KST,IH)*H**PXUEXP(KST,IH)                          DAT00040
02392*                C** *   IH=1 FOR H LESS THAN 20 METERS.                             DAT00050
02393*                C** *   IH=2 FOR H FROM 20 TO 30 METERS.                            DAT00060
02394*                C** *   IH=3 FOR H FROM 30 TO 50 METERS.                            DAT00070
02395*                C** *   IH=4 FOR H FROM 50 TO 70 METERS.                            DAT00080
02396*                C** *   IH=5 FOR H FROM 70 TO 100 METERS.                           DAT00090
02397*                C** *   IH=6 FOR H FROM 100 TO 200 METERS.                          DAT00100
02398*                C** *   IH=7 FOR H FROM 200 TO 300 METERS.                          DAT00110
02399*                C** *   IH=8 FOR H FROM 300 TO 500 METERS.                          DAT00120
02400*                C** *   IH=9 FOR H GREATER THAN 500 METERS.                         DAT00130
02401*          2          COMMON /EXPOS/ PXUCOF(6,9),PXUEXP(6,9),HC(10)                 DAT00140
02402*          3          DATA PXUCOF /.10401E+00,.12333E+00,.14273E+00,.15351E+00,.18855E+00 DAT00150
02403*                     10,.18668E+00,.77533E-01,.11728E+00,.14120E+00,.18329E+00,.20458E+00 DAT00160
02404*                     20,.30326E+00,.67228E-01,.10013E+00,.13963E+00,.19162E+00,.38908E+00 DAT00170
02405*                     30,.74271E+00,.40484E-01,.75308E-01,.13784E+00,.54357E+00,.72550E+00 DAT00180
02406*                     40,.22936E+01,.28539E-01,.66936E-01,.13615E+00,.52790E+00,.12908E+00 DAT00190
02407*                     51,.56983E+01,.14792E-01,.65799E-01,.13315E+00,.74982E+00,.28818E+00 DAT00200
02408*                     61,.40940E+03,.12403E-01,.64321E-01,.12927E+00,.10826E+01,.77020E+00 DAT00210
02409*                     72,.23011E+05,.12340E-01,.62874E-01,.12546E+00,.15580E+01,.68810E+00 DAT00220
02410*                     83,.86522E+06,.12245E-01,.60615E-01,.11952E+00,.22516E+01,.82842E+00 DAT00230
02411*                     93,.00000E+00/                                                DAT00240
02412*          4          DATA PXUEXP /-.19460E+01,-.19774E+01,-.20086E+01,-.20782E+01,-.21 DAT00250
02413*                     122E+01,-.22176E+01,-.18479E+01,-.19661E+01,-.20050E+01,-.21317E+01 DAT00260
02414*                     2,-.22094E+01,-.24209E+01,-.18606E+01,-.19196E+01,-.20017E+01,-.21 DAT00270
02415*                     362E+01,-.23099E+01,-.26556E+01,-.16763E+01,-.18468E+01,-.19984E+01 DAT00280
02416*                     4,-.24128E+01,-.25578E+01,-.29371E+01,-.15940E+01,-.18191E+01,-.19 DAT00290
02417*                     555E+01,-.24059E+01,-.26938E+01,-.31511E+01,-.14517E+01,-.18153E+01 DAT00300
02418*                     6,-.19907E+01,-.28917E+01,-.28678E+01,-.40795E+01,-.14181E+01,-.18 DAT00310
02419*                     711E+01,-.19851E+01,-.25518E+01,-.34879E+01,-.48395E+01,-.14172E+01 DAT00320
02420*                     8,-.18071E+01,-.19799E+01,-.26152E+01,-.38719E+01,-.53670E+01,-.14 DAT00330
02421*                     960E+01,-.18012E+01,-.19721E+01,-.26744E+01,-.37954E+01,-.17020E+01 DAT00340
02422*                     A/                                                            DAT00350
02423*          5          DATA HC1 /10.,20.,30.,50.,70.,100.,200.,300.,500.,1000./      DAT00360
02424*                C                                                                   DAT00370
02425*          6          END                                                           DAT00380
```

SYMBOL = = = = = = = = = = = = = = = = = = REFERENCES = = = = = = = = = = = = = = = = = =

EXPOS	-	2C0	
HC1	-	2C0	50A
PXUCOF	-	2C0	30A
PXUEXP	-	2C0	40A

FUNCTION ANGARC (DELM,DELN)

```
02426*      1          FUNCTION ANGARC (DELM,DELN)                                  ARC00010
02427*            C       DETERMINES APPROPRIATE ANGLE OF TAN(ANG) = DELM/DELN      ARC00020
02428*            C       WHICH IS REQUIRED FOR CALCULATION OF RESULTANT WIND DIRECTION. ARC00030
02429*            C       DELM IS THE AVERAGE WIND COMPONENT IN THE EAST DIRECTION. ARC00040
02430*            C       DELN IS THE AVERAGE WIND COMPONENT IN THE NORTH DIRECTION. ARC00050
02431*            C       NO COMMON REQUIREMENT, NO ARRAYS, USES LIBRARY FUNCTION ATAN ARC00060
02432*      2          IF (DELN) 10,80,80                                           ARC00070
02433*      3     10   IF (DELM) 20,30,20                                           ARC00080
02434*      4     20   ANGARC=57.29578*ATAN(DELM/DELN)+180.                        ARC00090
02435*      5          RETURN                                                       ARC00100
02436*      6     30   ANGARC=180.                                                  ARC00110
02437*      7          RETURN                                                       ARC00120
02438*      8     40   IF (DELM) 50,60,70                                           ARC00130
02439*      9     50   ANGARC=270.                                                  ARC00140
02440*     10          RETURN                                                       ARC00150
02441*     11     60   ANGARC=0.                                                   ARC00160
02442*            C    ANGARC=0. INDICATES INDETERMINATE ANGLE                     ARC00170
02443*     12          RETURN                                                       ARC00180
02444*     13     70   ANGARC=090.                                                 ARC00190
02445*     14          RETURN                                                       ARC00200
02446*     15     80   IF (DELM) 90,100,110                                        ARC00210
02447*     16     90   ANGARC=57.29578*ATAN(DELM/DELN)+360.                        ARC00220
02448*     17          RETURN                                                       ARC00230
02449*     18    100   ANGARC=360.                                                 ARC00240
02450*     19          RETURN                                                       ARC00250
02451*     20    110   ANGARC=57.29578*ATAN(DELM/DELN)                            ARC00260
02452*     21          RETURN                                                       ARC00270
02453*            C                                                                ARC00280
02454*     22          END                                                          ARC00290
```

SYMBOL = = = = = = = = = = = = = = = = REFERENCES = = = = = = = = = = = = = = = =

```
10      -    2     3*
20      -    3     3      4*
30      -    3     6*
40      -    2     8*
50      -    8     9*
60      -    8    11*
70      -    8    13*
80      -    2    15*
90      -   15    16*
100     -   15    18*
110     -   15    20*
ANGARC  -   1EY    4=     6=     9=    11=    13=    16=    18=    20=
ATAN    -    4    16    20
DELM    -   1AG    3      4      8    15    16    20
DELN    -   1AG    2      4     16    20
```

```
02032*   1          SUBROUTINE PTR                                                  PTR00010
02033*        C      THE PURPOSE OF THIS ROUTINE IS TO CALCULATE CONCENTRATIONS FROM PTR00020
02034*        C      POINT SOURCES.                                                  PTR00030
02035*        C                                                                      PTR00040
02036*        C->->->->SECTION PTR.A - COMMON AND DIMENSION.                         PTR00050
02037*        C                                                                      PTR00060
02038*   2          COMMON /MPOR/ IOPT(25)                                          PTR00070
02039*   3          COMMON /MPO/ NRECEP,NAVG,NPHL,NPT,IDATE(3),RREC(180),SREC(180),7PPTR00080
02040*              1(180),ELR(180),PHCHI(180),PHSIGS(180,26),HSAV(250),DSAV(250),PCHI(PTR00090
02041*              2180),PSIGS(180,25),IPOL                                        PTR00100
02042*   4          COMMON /MPR/ UPL,Z,H,HL,X,Y,KST,DELH,SY,SZ,RC                   PTR00110
02043*   5          COMMON /MP/ SOURCE(9,250),CONTWO,PSAV(250),IPSTGS(250),U,TEMP,SINTPTR00120
02044*              1,COST,PL(6),ELP(250),ELHN,HANE,TLOS,CELM,CTER                  PTR00130
02045*   6          DIMENSION UPH(250), HPR(250), FP(250), DH(250), PARTC(250)      PTR00140
02046*        C                                                                      PTR00150
02047*        C->->->->SECTION PTR.B - INITIALIZE AND START RECEPTOR LOOP.           PTR00160
02048*        C                                                                      PTR00170
02049*        C         ZERO EFFECTIVE STACK HEIGHT FOR EACH SOURCE                  PTR00180
02050*        C                                                                      PTR00190
02051*        C           NPT - THE NUMBER OF POINT SOURCES                          PTR00200
02052*   7          DO 10 J=1,NPT                                                   PTR00210
02053*        C         HSAV WILL BE USED TO STORE THE SOURCE PLUME HEIGHTS.         PTR00220
02054*   8    10    HSAV(J)=0.0                                                     PTR00230
02055*        C         LOOP ON RECEPTORS                                            PTR00240
02056*        C           NRECEP - THE NUMBER OF RECEPTORS                           PTR00250
02057*   9          DO 180 K=1,NRECEP                                               PTR00260
02058*        C         IF IOPT(1)=1, TERRAIN ADJUSTMENTS ARE MADE.                  PTR00270
02059*   10         IF (IOPT(1).EQ.0) GO TO 20                                      PTR00280
02060*        C           ELR - RECEPTOR GROUND LEVEL ELEVATION                      PTR00290
02061*   11         ER=ELR(K)                                                       PTR00300
02062*        C           ELHN - LOWEST SOURCE STACK-TOP ELEVATION?                  PTR00310
02063*   12         IF (ER.LE.ELHN) GO TO 20                                        PTR00320
02064*   13         PCHI(K)=99999.E+26                                              PTR00330
02065*   14         PHCHI(K)=99999.E+26                                             PTR00340
02066*   15         GO TO 180                                                       PTR00350
02067*   16   20    CONTINUE                                                        PTR00360
02068*        C           ZR - RECEPOR HEIGHT ABOVE GROUND                           PTR00370
02069*   17         Z=ZR(K)                                                         PTR00380
02070*        C                                                                      PTR00390
02071*        C->->->->SECTION PTR.C - START SOURCES LOOP, CALCULATE                 PTR00400
02072*        C                                UPWIND AND CROSSWIND DISTANCES.       PTR00410
02073*        C                                                                      PTR00420
02074*   18         DO 170 J=1,NPT                                                  PTR00430
02075*   19         PARTC(J)=0.0                                                    PTR00440
02076*        C           RO - EAST COORDINATE OF THE SOURCE                         PTR00450
02077*   20         RO=SOURCE(1,J)                                                  PTR00460
02078*        C           SO - NORTH COORDINATE OF THE SOURCE                        PTR00470
02079*   21         SO=SOURCE(2,J)                                                  PTR00480
02080*        C           ELP - SOURCE GROUND LEVEL ELEVATION                        PTR00490
02081*   22         EP=ELP(J)                                                       PTR00500
```

```
02082*                C        DETERMINE UPWIND DISTANCE                                  PTR00510
02083*                C        XDUM,YDUM IN USER UNITS. X,Y IN KM.                        PTR00520
02084*                C          RREC - EAST COORDINATE OF THE RECEPTOR                   PTR00530
02085*          23          XDUM=RQ-RREC(K)                                                PTR00540
02086*                C          SREC - NORTH COORDINATE OF THE RECEPTOR                  PTR00550
02087*          24          YDUM=SQ-SREC(K)                                                PTR00560
02088*                C        SINT AND COST ARE THE SIN AND COS OF THE WIND DIRECTION    PTR00570
02089*                C        CONTWO - MULTIPLIER CONSTANT TO CONVERT USER UNITS TO KM   PTR00580
02090*          25          X=(YDUM*COST+XDUM*SINT)*CONTWO                                 PTR00590
02091*                C         X IS THE UPWIND DISTANCE  OF THE SOURCE FROM THE RECEPTOR. PTR00600
02092*                C        IF X IS NEGATIVE, INDICATING THAT THE SOURCE IS DOWNWIND OF PTR00610
02093*                C        THE RECEPTOR, THE CALCULATION IS TERMINATED ASSUMING NO    PTR00620
02094*                C        CONTRIBUTION FROM THAT SOURCE.                             PTR00630
02095*          26          IF (X.LE.0.0) GO TO 170                                        PTR00640
02096*                C                                                                   PTR00650
02097*                C        DETERMINE CROSSWIND DISTANCE                               PTR00660
02098*                C                                                                   PTR00670
02099*          27          Y=(YDUM*SINT-XDUM*COST)*CONTWO                                 PTR00680
02100*          28          H=HSAV(J)                                                      PTR00690
02101*                C        SKIP PLUME RISE CALCULATION IF EFFECTIVE HT. HAS ALREADY BEEN PTR00700
02102*                C          CALCULATED FOR THIS SOURCE                               PTR00710
02103*          29          IF (H.EQ.0.0) GO TO 30                                         PTR00720
02104*          30          DELH=DH(J)                                                     PTR00730
02105*                C                                                                   PTR00740
02106*                C->->->->SECTION PTR.D - EXTRAPOLATE WIND SPEED TO STACK TOP        PTR00750
02107*                C                          CALCULATE PLUME RISE.                    PTR00760
02108*                C                                                                   PTR00770
02109*          31          GO TO 110                                                      PTR00780
02110*                C         MODIFY WIND SPEED BY POWER LAW PROFILE IN ORDER TO TAKE INTO PTR00790
02111*                C        ACCOUNT THE INCREASE OF WIND SPEED WITH HEIGHT.            PTR00800
02112*                C        ASSUME WIND MEASUREMENTS ARE REPRESENTATIVE FOR HEIGHT = HANE. PTR00810
02113*                C         THT IS THE PHYSICAL STACK HEIGHT                          PTR00820
02114*          32    30    THT=SOURCE(5,J)                                                PTR00830
02115*                C        POINT SOURCE HEIGHT NOT ALLOWED TO BE LESS THAN 1 METER.   PTR00840
02116*          33          IF (THT.LT.1.) THT=1.                                          PTR00850
02117*                C          U - WIND SPEED AT HEIGHT 'HANE'                          PTR00860
02118*                C          PL - POWER FOR THE WIND PROFILE                          PTR00870
02119*                C          UPL - WIND AT THE PHYSICAL STACK HEIGHT                  PTR00880
02120*          34          UPL=U*(THT/HANE)**PL(KST)                                      PTR00890
02121*                C        WIND SPEED NOT ALLOWED TO BE LESS THAN 1 METER/SEC.        PTR00900
02122*          35          IF (UPL.LT.1.) UPL=1.                                          PTR00910
02123*                C        STORE THE STACK TOP WIND FOR THE JTH SOURCE FOR THIS HOUR  PTR00920
02124*          36          UPH(J)=UPL                                                     PTR00930
02125*          37          VS=SOURCE(8,J)                                                 PTR00940
02126*          38          BUOY=SOURCE(9,J)                                               PTR00950
02127*          39          TS=SOURCE(6,J)                                                 PTR00960
02128*                C        TEMP - THE AMBIENT AIR TEMPERATURE FOR THIS HOUR           PTR00970
02129*          40          DELT=TS-TEMP                                                   PTR00980
02130*          41          F=BUOY*DELT/TS                                                 PTR00990
02131*                C         IOPT(6) HOURLY EMISSION INPUT FROM TAPE/DISK?  0=NO, 1=YES. PTR01000
```

```
02132*      42          IF (IOPT(6).EQ.0) GO TO 40                                  PTR01010
02133*                C    MODIFY EXIT VELOCITY AND BUOYANCY BY RATIO OF HOURLY EMISSIONS PTR01020
02134*                C    TO AVERAGE EMISSIONS                                      PTR01030
02135*      43          SCALE=SOURCE(IPOL,J)/PSAV(J)                                PTR01040
02136*      44          VS=VS*SCALE                                                 PTR01050
02137*      45          F=F*SCALE                                                   PTR01060
02138*      46    40    D=SOURCE(7,J)                                               PTR01070
02139*                C    CALCULATE  H PRIME WHICH TAKES INTO ACCOUNT STACK DOWNWASH PTR01080
02140*                C    BRIGGS(1973) PAGE 4                                       PTR01090
02141*      47          HPRM=THT                                                    PTR01100
02142*                C    IF IOPT(2)=1, THEN NO STACK DOWNWASH COMPUTATION          PTR01110
02143*      48          IF (IOPT(2).EQ.1) GO TO 50                                  PTR01120
02144*      49          DUM=VS/UPL                                                  PTR01130
02145*      50          IF (DUM.LT.1.5) HPRM=THT+2.*D*(DUM-1.5)                     PTR01140
02146*                C    'HPRM' IS BRIGGS' H-PRIME                                 PTR01150
02147*      51          IF (HPRM.LT.0.) HPRM=0.                                     PTR01160
02148*      52    50    CONTINUE                                                    PTR01170
02149*                C                                                              PTR01180
02150*                C    CALCULATE PLUME RISE AND ADD H PRIME TO OBTAIN EFFECTIVE  PTR01190
02151*                C    STACK HEIGHT.                                             PTR01200
02152*                C                                                              PTR01210
02153*                C    PLUME RISE CALCULATION                                    PTR01220
02154*      53          IF (KST.GT.4) GO TO 70                                      PTR01230
02155*                C    PLUME RISE FOR UNSTABLE CONDITIONS                        PTR01240
02156*      54          IF (TS.LT.TEMP) GO TO 80                                    PTR01250
02157*      55          IF (F.GE.55.) GO TO 60                                      PTR01260
02158*                C    DETERMINE DELTA-T FOR BUOYANCY-MOMENTUM CROSSOVER(F<55)   PTR01270
02159*                C    FOUND BY EQUATING BRIGGS(1969) EQ 5.2, P.59 WITH COMBINATION OFPTR01280
02160*                C    BRIGGS(1971) EQUATIONS 6 AND 7, PAGE 1031 FOR F<55.       PTR01290
02161*      56          DTMB=0.0297*TS*VS**0.33333/D**0.66667                       PTR01300
02162*      57          IF (DELT.LT.DTMB) GO TO 80                                  PTR01310
02163*                C    DISTANCE OF FINAL BUOYANT RISE(0.049 IS 14*3.5/1000)      PTR01320
02164*                C    BRIGGS(1971) EQN. 7,F<55, AND DIST TO FINAL RISE IS 3.5 XSTAR PTR01330
02165*                C    DISTF IN KILOMETERS                                       PTR01340
02166*      58          DISTF=0.049*F**0.625                                        PTR01350
02167*                C    COMBINATION OF BRIGGS(1971) EQNS. 6 AND 7, PAGE 1031 FOR F<55. PTR01360
02168*      59          DELH=21.425*F**0.75/UPL                                     PTR01370
02169*      60          GO TO 100                                                   PTR01380
02170*                C    DETERMINE DELTA-T FOR BUOYANCY-MOMENTUM CROSSOVER(F>55)   PTR01390
02171*                C    FOUND BY EQUATING BRIGGS(1969) EQ 5.2, P.59 WITH COMBINATION OFPTR01400
02172*                C     BRIGGS(1971) EQUATIONS 6 AND 7, PAGE 1031 FOR F>55.      PTR01410
02173*      61    60    DTMB=0.00575*TS*VS**0.66667/D**0.33333                      PTR01420
02174*      62          IF (DELT.LT.DTMB) GO TO 80                                  PTR01430
02175*                C    DISTANCE OF FINAL BUOYANT RISE (0.119 IS 3*3.5/1000)      PTR01440
02176*                C    BRIGGS(1971) EQN. 7, F>55, AND DIST TO FINAL RISE IS 3.5 XSTAR PTR01450
02177*                C    DISTF IN KILOMETERS                                       PTR01460
02178*      63          DISTF=0.119*F**0.4                                          PTR01470
02179*                C    COMBINATION OF BRIGGS(1971) EQNS. 6 AND 7, PAGE 1031 FOR F>55. PTR01480
02180*      64          DELH=38.71*F**0.6/UPL                                       PTR01490
02181*      65          GO TO 100                                                   PTR01500
```

```
02182*                C        PLUME RISE FOR STABLE CONDITIONS.                                PTR01510
02183*        66      70    DTHDZ=0.02                                                          PTR01520
02184*        67            IF (KST.GT.5) DTHDZ=0.035                                           PTR01530
02185*        68            S=9.80616*DTHDZ/TEMP                                                PTR01540
02186*        69            IF (TS.LT.TEMP) GO TO 90                                            PTR01550
02187*                C        DETERMINE DELTA-T FOR BUOYANCY-MOMENTUM CROSSOVER(STABLE)        PTR01560
02188*                C        FOUND BY EQUATING BRIGGS(1975) EQ 59, P. 96 FOR STABLE BUOYANCYPTR01570
02189*                C        RISE WITH BRIGGS(1969) EQ 4.28, P. 59 FOR STABLE MOMENTUM RISE.PTR01580
02190*        70            DTMB=0.01958*TEMP*VS*SQRT(S)                                        PTR01590
02191*        71            IF (DELT.LT.DTMB) GO TO 90                                          PTR01600
02192*                C        STABLE BUOYANT RISE FOR WIND CONDITIONS.(WIND NOT ALLOWED LOW    PTR01610
02193*                C        ENOUGH TO REQUIRE STABLE RISE IN CALM CONDITIONS.)               PTR01620
02194*                C        BRIGGS(1975) EQ 59, PAGE 96.                                     PTR01630
02195*        72            DELH=2.6*(F/(UPL*S))**0.33333                                       PTR01640
02196*                C        COMBINATION OF BRIGGS(1975) EQ 48 AND EQ 59. NOTE DISTF IN KM.   PTR01650
02197*        73            DISTF=0.0020715*UPL/SQRT(S)                                         PTR01660
02198*        74            GO TO 100                                                           PTR01670
02199*                C        UNSTABLE-NEUTRAL MOMENTUM RISE                                   PTR01680
02200*                C        BRIGGS(1969) EQN. 5.2, PAGE 59 NOTE: MOST ACCURATE WHEN VS/U>4:PTR01690
02201*                C        TENDS TO OVERESTIMATE RISE WHEN VS/U<4 (SEE BRIGGS(1975) P. 78.PTR01700
02202*                C         FIGURE 4.)                                                      PTR01710
02203*        75      80    DELH=3.*VS*D/UPL                                                    PTR01720
02204*        76            DISTF=0.                                                            PTR01730
02205*        77            GO TO 100                                                           PTR01740
02206*                C        STABLE MOMENTUM RISE                                             PTR01750
02207*        78      90    DHA=3.*VS*D/UPL                                                     PTR01760
02208*                C        BRIGGS(1969) EQUATION 4.28, PAGE 59                              PTR01770
02209*        79            DELH=1.5*(VS*VS*D*D*TEMP/(4.*TS*UPL))**0.33333/S**0.16667           PTR01780
02210*        80            IF (DHA.LT.DELH) DELH=DHA                                           PTR01790
02211*        81            DISTF=0.                                                            PTR01800
02212*                C        STORE OFF PLUME HEIGHT(ETC.) FOR THIS SOURCE FOR USE WITH        PTR01810
02213*                C        OTHER RECEPTORS.                                                 PTR01820
02214*        82      100   H=HPRM+DELH                                                         PTR01830
02215*        83            HSAV(J)=H                                                           PTR01840
02216*        84            DH(J)=DELH                                                          PTR01850
02217*        85            DSAV(J)=DISTF                                                       PTR01860
02218*        86            UPH(J)=UPL                                                          PTR01870
02219*        87            HPR(J)=HPRM                                                         PTR01880
02220*        88            FP(J)=F                                                             PTR01890
02221*                C        IF SOURCE-RECEPTOR DISTANCE IS GREATER OR EQUAL TO DISTANCE TO   PTR01900
02222*                C        FINAL RISE, SKIP PLUME RISE CALCULATION AND USE FINAL RISE.      PTR01910
02223*        89      110   IF (X.GE.DSAV(J)) GO TO 120                                         PTR01920
02224*        90            IF (IOPT(4).EQ.0.AND.IOPT(3).EQ.1) GO TO 120                        PTR01930
02225*                C        CALCULATE GRADUAL PLUME RISE IF (1) THE USER SPECIFIES SO,       PTR01940
02226*                C        OR (2) USER EMPLOYS CALCULATION OF INITIAL DISPERSION.....       PTR01950
02227*                C        IN THIS CASE, USE OF FINAL EFFECTIVE HEIGHT IN THE CALCULATION PTR01960
02228*                C        OF DISPERSION COEFFICENTS COULD LEAD TO MISLEADING VALUES SINCEPTR01970
02229*                C          SIGMA-Y,-Z = DELTA-H/3.5                                       PTR01980
02230*        91            DELH=160.*FP(J)**0.33333*X**0.66667/UPH(J)                          PTR01990
02231*                C        PLUME RISE FOR DISTANCE X(160 IS 1.6*1000**.67 BECAUSE X IN KM)PTR02000
```

```
02232*      92          IF (DELH.GT.DH(J)) DELH=DH(J)                                  PTR02010
02233*      93          IF (IOPT(3).EQ.1) GO TO 120                                    PTR02020
02234*            C        IF SPECIFYING CALCULATION OF INITIAL DISPERSION BUT ARE NOT  PTR02030
02235*            C        SPECIFYING CALCULATION OF GRADUAL PLUME RISE, THEN DO NOT    PTR02040
02236*            C        ADD THE NEW GRADUAL DELTA-H TO THE EFFECTIVE HEIGHT. OTHERWISE,PTR02050
02237*            C        CHECK THE GRADUAL RISE PLUME HEIGHT WITH FINAL EFFECTIVE HEIGHTPTR02060
02238*            C        AND SET THE PLUME HEIGHT TO THE SMALLER OF THE TWO VALUES.   PTR02070
02239*      94          H=HPR(J)+DELH                                                  PTR02080
02240*            C        ADD PLUME RISE TO STACK HEIGHT FOR TOTAL EFFECTIVE STACK HT. PTR02090
02241*            C        END PLUME RISE CALCULATION                                   PTR02100
02242*      95    120   UPL=UPH(J)                                                     PTR02110
02243*            C                                                                     PTR02120
02244*            C->->->->SECTION PTR.E - CALCULATE THE CONTRIBUTION OF               PTR02130
02245*            C                          ONE SOURCE TO ONE RECEPTOR.                PTR02140
02246*            C                                                                     PTR02150
02247*      96          IF (H.LT.HL) GO TO 130                                         PTR02160
02248*      97          PROD=0.                                                        PTR02170
02249*      98          GO TO 150                                                      PTR02180
02250*            C        IF IOPT(1) = 1, TERRAIN ADJUSTMENTS ARE MADE                PTR02190
02251*      99    130   IF (IOPT(1).EQ.0) GO TO 140                                    PTR02200
02252*     100          DUM=ER-EP                                                      PTR02250
02253*     101          H=H+CELM*(CTER*DUM-DUM)                                        PTR02260
02254*            C        RCP RETURNS THE DISPERSION PARAMETERS, SY AND SZ (METERS)   PTR02270
02255*            C        AND THE RELATIVE CONCENTRATION VALUES CHI/Q (SEC/M**3)      PTR02280
02256*     102    140   CALL RCP                                                       PTR02290
02257*            C        CALCULATE TRAVEL TIME IN KM-SEC/M TO INCLUDE DECAY RATE OF  PTR02300
02258*            C        POLLUTANT.                                                  PTR02310
02259*     103          TT=X/UPL                                                       PTR02320
02260*            C        TLOS IN METERS/KM-SEC, SO TT*TLOS IS DIMENSIONLESS          PTR02330
02261*            C        INCLUDE THE POLLUTANT LOSS                                  PTR02340
02262*     104          PROD=RC*SOURCE(IPOL,J)/EXP(TT*TLOS)                            PTR02350
02263*            C        IF HAFL IS ZERO, TLOS WILL START AS ZERO AND                PTR02360
02264*            C        RESULT IN NO COMPUTATIION OF POLLUTANT LOSS.                PTR02370
02265*            C        INCREMENT CONCENTRATION AT K-TH RECEPTOR(G/M**3)            PTR02380
02266*            C          PCHI - SUM FOR THE AVERAGING TIME AT RECEPTOR K           PTR02390
02267*     105    150   PCHI(K)=PCHI(K)+PROD                                           PTR02400
02268*            C          PHCHI - CONCENTRATION FOR THIS HOUR AT RECEPTOR K         PTR02410
02269*     106          PHCHI(K)=PHCHI(K)+PROD                                         PTR02420
02270*     107          KSIG=IPSIGS(J)                                                 PTR02430
02271*     108          IF (KSIG.EQ.0) GO TO 160                                       PTR02440
02272*            C        STORE CONCENTRATIONS FROM SIGNIFICANT SOURCES. (G/M**3)     PTR02450
02273*     109          PSIGS(K,KSIG)=PSIGS(K,KSIG)+PROD                               PTR02460
02274*     110          PHSIGS(K,KSIG)=PHSIGS(K,KSIG)+PROD                             PTR02470
02275*     111          PSIGS(K,26)=PSIGS(K,26)+PROD                                   PTR02480
02276*     112          PHSIGS(K,26)=PHSIGS(K,26)+PROD                                 PTR02490
02277*     113    160   PARTC(J)=PROD                                                  PTR02500
02278*            C                                                                     PTR02510
02279*            C->->->->SECTION PTR.F - END SOURCE AND RECEPTOR LOOPS.              PTR02520
02280*            C                                                                     PTR02530
02281*     114    170   CONTINUE                                                       PTR02580
```

```
02282*                C        END OF LOOP FOR SOURCES                                          PTR02550
02283*                C        WRITE PARTIAL CONCENTRATIONS ON DISK(G/M**3)   IF IOPT(21) = 1.  PTR02560
02284*        115           IF (IOPT(21).EQ.0) GO TO 180                                        PTR02570
02285*                C        USER PLEASE NOTE: PARTIAL CONC. IN G/M**3, NOT MICROGRAM/M**3    PTR02580
02286*        116           WRITE (10) IDATE,LH,K,(PARTC(J),J=1,NPT)                            PTR02590
02287*        117     180   CONTINUE                                                            PTR02600
02288*                C        END OF LOOP FOR RECEPTORS                                        PTR02610
02289*        118           RETURN                                                              PTR02620
02290*                C                                                                          PTR02630
02291*                C** *  SECTIONS OF SUBROUTINE PTR.                                        PTR02640
02292*                C         SECTION PTR.A -  COMMON AND DIMENSION.                           PTR02650
02293*                C         SECTION PTR.B -  INITIALIZE AND START RECEPTOR LOOP.             PTR02660
02294*                C         SECTION PTR.C -  START SOURCES LOOP; CALCULATE UPWIND AND        PTR02670
02295*                C                           CROSSWIND DISTANCES.                           PTR02680
02296*                C         SECTION PTR.D -  EXTRAPOLATE WIND SPEED TO STACK TOP;            PTR02690
02297*                C                           CALCULATE PLUME RISE.                          PTR02700
02298*                C         SECTION PTR.E -  CALCULATE CONTRIBUTION FROM A SOURCE TO ONE     PTR02710
02299*                C                           RECEPTOR.                                      PTR02720
02300*                C         SECTION PTR.F -  END SOURCE AND RECEPTOR LOOPS.                  PTR02730
02301*                C                                                                          PTR02740
02302*        119           END                                                                 PTR02750
```

SUBROUTINE PTR

SYMBOL		REFERENCES									
10	-	7	8*								
20	-	10	12	16*							
30	-	29	32*								
40	-	82	86*								
50	-	88	52*								
60	-	55	61*								
70	-	53	66*								
80	-	54	57	62	75*						
90	-	69	71	78*							
100	-	60	65	74	77	82*					
110	-	31	89*								
120	-	89	90	93	95*						
130	-	96	99*								
140	-	99	102*								
150	-	98	105*								
160	-	108	113*								
170	-	18	26	118*							
180	-	9	15	115	117*						
BUOY	-	38=	41								
CELM	-	5C0	101								
CONTWO	-	5C0	25	27							
COST	-	5C0	25	27							
CTER	-	5C0	101								
D	-	46=	50	56	61	75	78	79	79		
DELH	-	4C0	30=	59=	64=	72=	75=	79=	80	80=	82
		84	91=	92	92=	98					
DELT	-	40=	41	57	62	71					
DH	-	6DI	30	84=	92	92					
DHA	-	78=	80	80							
DISTF	-	58=	63=	73=	76=	81=	85				
DSAV	-	3C0	85=	89							
DTHDZ	-	66=	67=	68							
DTMB	-	56=	57	61=	62	70=	71				
DUM	-	49=	50	50	100=	101	101				
ELHN	-	5C0	12								
ELP	-	5C0	22								
ELR	-	3C0	11								
EP	-	22=	100								
ER	-	11=	12	100							
EXP	-	104									
F	-	41=	45=	45	55	58	59	63	64	72	88
FP	-	6DI	88=	91							
H	-	4C0	28=	29	82=	83	94=	96	101=	101	
HANF	-	5C0	74								
HL	-	4C0	96								
HPR	-	6DI	87=	94							
HPR*	-	47=	50=	51	51=	82	87				
HSAV	-	3C0	8=	28	83=						

SUBROUTINE PTR

IDATE	-	3C0	116WR								
IOPT	-	2C0	10	42	48	90	90	93	99	115	
IPOL	-	3C0	43	104							
IPSIGS	-	5C0	107								
J	-	7	8	18	19	20	21	22	28	30	32
		36	37	38	39	42	43	46	83	84	85
		86	87	88	89	91	91	92	92	94	95
		104	107	113	116WR	116WR					
K	-	9	11	13	14	17	23	24	105	105	106
		106	109	109	110	110	111	111	112	112	116WR
KSIG	-	107=	108	109	109	110	110				
KST	-	4C0	34	53	67						
LH	-	3C0	116WR								
MP	-	5C0									
MPO	-	3C0									
MPOR	-	2C0									
MPR	-	4C0									
NAVG	-	3C0									
NB	-	3C0									
NPT	-	3C0	7	18	116WR						
NRECEP	-	3C0	9								
PARTC	-	6DI	19=	113=	116WR						
PCHI	-	3C0	13=	105=	105						
PHCHI	-	3C0	14=	106=	106						
PHSIGS	-	3C0	110=	110	112=	112					
PL	-	5C0	34								
PROD	-	97=	104=	105	106	109	110	111	112	113	
PSAV	-	5C0	43								
PSIGS	-	3C0	109=	109	111=	111					
PTR	-	1EY									
RC	-	4C0	104								
RCP	-	112									
RO	-	20=	23								
RREC	-	3C0	23								
S	-	68=	70	72	73	79					
SCALE	-	43=	44	45							
SINT	-	5C0	25	27							
SOURCE	-	5C0	20	21	32	37	38	39	43	46	104
SQ	-	21=	24								
SQRT	-	70	73								
SREC	-	3C0	24								
SY	-	4C0									
SZ	-	4C0									
TEMP	-	5C0	40	54	68	69	70	79			
THT	-	32=	33	33=	34	47	50				
TLOS	-	5C0	104								
TS	-	39=	40	41	54	56	61	69	79		
TT	-	103=	104								
U	-	5C0	34								
UPH	-	6DI	36=	86=	91	95					

SUBROUTINE PTR

UPL	-	4C0	34=	35	35=	36	49	59	64	72	73
		75	78	79	86	95=	103				
VS	-	37=	44=	44	49	56	61	70	75	78	79
		79									
X	-	4C0	25=	26	89	91	103				
XDUM	-	23=	25	27							
Y	-	4C0	27=								
YDUM	-	24=	25	27							
Z	-	4C0	17=								
ZR	-	3C0	17								

```
01800*   1        SUBROUTINE RCP                                          RCP00010
01801*        C                                                           RCP00020
01802*        C->->->->SECTION RCP.A - COMMON.                            RCP00030
01803*   2        COMMON /MPOR/ IOPT(25)                                  RCP00040
01804*   3        COMMON /MPR/ UPL,Z,H,HL,X,Y,KST,DELH,SY,SZ,RC           RCP00050
01805*        C                                                           RCP00060
01806*        C***   MODIFICATIONS:                                       RCP00070
01807*        C        11/27/79 BY K.W.BALDRIDGE, C.S.C., CONVERTED CODE FROM FIELDATARCP00080
01808*        C                 TO ASCII FORTRAN AND MADE CODE MORE STANDARD  RCP00090
01809*        C                                                           RCP00100
01810*        C->->->->SECTION RCP.B - EXPLANATIONS AND COMPUTATIONS      RCP00110
01811*        C                          COMMON TO ALL CONDITIONS.        RCP00120
01812*        C                                                           RCP00130
01813*        C  RCP DETERMINES RELATIVE CONCENTRATIONS, CHI/Q, FROM POINT SOURCES.  RCP00140
01814*        C        IT CALLS UPON  PGYZ TO OBTAIN STANDARD DEVIATIONS. RCP00150
01815*        C        THE INPUT VARIABLES ARE....                        RCP00160
01816*        C         UPL   WIND SPEED (M/SEC)                          RCP00170
01817*        C         Z     RECEPTOR HEIGHT (M)                         RCP00180
01818*        C         H     EFFECTIVE STACK HEIGHT (M)                  RCP00190
01819*        C         HL    MIXING HEIGHT- TOP OF NEUTRAL OR UNSTABLE LAYER(M).  RCP00200
01820*        C         X     DISTANCE RECEPTOR IS DOWNWIND OF SOURCE (KM)  RCP00210
01821*        C         Y     DISTANCE RECEPTOR IS CROSSWIND FROM SOURCE (KM)  RCP00220
01822*        C         KST   STABILITY CLASS                             RCP00230
01823*        C         DELH PLUME RISE(METERS)                           RCP00240
01824*        C        THE OUTPUT VARIABLES ARE....                       RCP00250
01825*        C          SY HORIZONTAL DISPERSION PARAMETER               RCP00260
01826*        C          SZ VERTICAL DISPERSION PARAMETER                 RCP00270
01827*        C         RC    RELATIVE CONCENTRATION (SEC/M**3) ,CHI/Q    RCP00280
01828*        C        IO IS CONTROL CODE FOR WARNING OUTPUT.             RCP00290
01829*   4        IO=6                                                    RCP00300
01830*        C        THE FOLLOWING EQUATION IS SOLVED --                RCP00310
01831*        C        RC = (1/(2*PI*UPL*SIGMA Y*SIGMA Z))* (EXP(-0.5*(Y/SIGMA Y)**2))RCP00320
01832*        C           (EXP(-0.5*((Z-H)/SIGMA Z)**2) + EXP(-0.5*((Z+H)/SIGMA Z)**2)RCP00330
01833*        C             PLUS THE SUM OF THE FOLLOWING 4 TERMS K TIMES (N=1,K) --  RCP00340
01834*        C                  FOR NEUTRAL OR UNSTABLE CASES:           RCP00350
01835*        C                TERM 1 - EXP(-0.5*((Z-H-2NL)/SIGMA Z)**2)  RCP00360
01836*        C                TERM 2 - EXP(-0.5*((Z+H-2NL)/SIGMA Z)**2)  RCP00370
01837*        C                TERM 3 - EXP(-0.5*((Z-H+2NL)/SIGMA Z)**2)  RCP00380
01838*        C                TERM 4 - EXP(-0.5*((Z+H+2NL)/SIGMA Z)**2)  RCP00390
01839*        C NOTE THAT MIXING HEIGHT- THE TOP OF THE NEUTRAL OR UNSTABLE LAYER-  RCP00400
01840*        C HAS A VALUE ONLY FOR STABILITIES 1-4, THAT IS, MIXING HEIGHT,  RCP00410
01841*        C THE HEIGHT OF THE NEUTRAL OR UNSTABLE LAYER, DOES NOT EXIST FOR STABLERCP00420
01842*        C LAYERS AT THE GROUND SURFACE- STABILITY 5 OR 6.           RCP00430
01843*        C        THE ABOVE EQUATION IS SIMILAR TO EQUATION (5.8) P 3A IN  RCP00440
01844*        C         WORKBOOK OF ATMOSPHERIC DISPERSION ESTIMATES WITH THE ADDITIONRCP00450
01845*        C         OF THE EXPONENTIAL INVOLVING Y.                   RCP00460
01846*        C       IF STABLE, SKIP CONSIDERATION OF MIXING HEIGHT.     RCP00470
01847*   5        IF (KST.GE.5) GO TO 50                                  RCP00480
01848*        C        IF THE SOURCE IS ABOVE THE LID, SET RC = 0., AND RETURN.  RCP00490
01849*   6        IF (H.GT.HL) GO TO 20                                   RCP00500
```

```
01850*      7          IF (Z-HL) 30,50,40                                          RCP00510
01851*      8     20   IF (Z.LT.HL) GO TO 40                                       RCP00520
01852*      9          WRITE (IO,470)                                              RCP00530
01853*     10     40   RC=0.                                                       RCP00540
01854*     11          RETURN                                                      RCP00550
01855*                C     IF X IS LESS THAN 1 METER, SET RC=0. AND RETURN.  THIS AVOIDS RCP00560
01856*                C     PROBLEMS OF INCORRECT VALUES NEAR THE SOURCE.          RCP00570
01857*     12     50   IF (X.LT.0.001) GO TO 40                                    RCP00580
01858*                C     CALL PGYZ TO OBTAIN VALUES FOR SY AND SZ               RCP00590
01859*     13          CALL PGYZ                                                   RCP00600
01860*                C     SY = SIGMA Y, THE STANDARD DEVIATION OF CONCENTRATION IN THE RCP00610
01861*                C     Y-DIRECTION (M)                                        RCP00620
01862*                C     SZ = SIGMA Z, THE STANDARD DEVIATION OF CONCENTRATION IN THE RCP00630
01863*                C     Z-DIRECTION (M)                                        RCP00640
01864*                C   IF IOPT(4)=1, CONSIDER BUOYANCY INDUCED DISPERSION OF PLUME DUE RCP00650
01865*                C     TO TURBULENCE DURING BUOYANT RISE.                     RCP00660
01866*     14          IF (IOPT(4).EQ.0) GO TO 70                                  RCP00670
01867*     15          DUM=DELH/3.5                                                RCP00680
01868*     16          DUM=DUM*DUM                                                 RCP00690
01869*     17          SY=SQRT(SY*SY+DUM)                                          RCP00700
01870*     18          SZ=SQRT(SZ*SZ+DUM)                                          RCP00710
01871*     19     70   C1=1.                                                       RCP00720
01872*     20          IF (Y.EQ.0.0) GO TO 100                                     RCP00730
01873*     21          YD=1000.*Y                                                  RCP00740
01874*                C     YD IS CROSSWIND DISTANCE IN METERS.                    RCP00750
01875*     22          DUM=YD/SY                                                   RCP00760
01876*     23          TEMP=0.5*DUM*DUM                                            RCP00770
01877*     24          IF (TEMP.GE.50.) GO TO 40                                   RCP00780
01878*     25          C1=EXP(TEMP)                                                RCP00790
01879*     26    100   IF (KST.GT.4) GO TO 120                                     RCP00800
01880*     27          IF (HL.LT.5000.) GO TO 200                                  RCP00810
01881*                C     IF STABLE CONDITION OR UNLIMITED MIXING HEIGHT,        RCP00820
01882*                C     USE EQUATION 3.2 IF Z = 0, OR EQ 3.1 FOR NON-ZERO Z.   RCP00830
01883*                C     (EQUATION NUMBERS REFER TO WORKBOOK OF ATMOSPHERIC DISPERSION RCP00840
01884*                C     ESTIMATES.)                                            RCP00850
01885*     28    120   C2=2.*SZ*SZ                                                 RCP00860
01886*     29          IF (Z) 40,130,150                                           RCP00870
01887*                C   NOTE: AN ERRONEOUS NEGATIVE Z WILL RESULT IN ZERO CONCENTRATIONSRCP00880
01888*                C                                                            RCP00890
01889*                C->->->->SECTION RCP.C - STABLE OR UNLIMITED MIXING, Z IS ZERO. RCP00900
01890*                C                                                            RCP00910
01891*     30    130   C3=H*H/C2                                                   RCP00920
01892*     31          IF (C3.GE.50.) GO TO 40                                     RCP00930
01893*     32          A2=1./EXP(C3)                                               RCP00940
01894*                C     MADE EQUATION 3.2.                                     RCP00950
01895*     33          RC=A2/(3.14159*UPL*SY*SZ*C1)                                RCP00960
01896*     34          RETURN                                                      RCP00970
01897*                C                                                            RCP00980
01898*                C->->->->SECTION RCP.D - STABLE OR UNLIMITED MIXING, Z IS NON-ZERO. RCP00990
01899*                C                                                            RCP01000
```

```
01900*   35   150   A2=0.                                                    RCP01010
01901*   36         A3=0.                                                    RCP01020
01902*   37         CA=Z-H                                                   RCP01030
01903*   38         CB=Z+H                                                   RCP01040
01904*   39         C3=CA*CA/C2                                              RCP01050
01905*   40         C4=CB*CB/C2                                              RCP01060
01906*   41         IF (C3.GE.50.) GO TO 170                                 RCP01070
01907*   42         A2=1./EXP(C3)                                            RCP01080
01908*   43   170   IF (C4.GE.50.) GO TO 190                                 RCP01090
01909*   44         A3=1./EXP(C4)                                            RCP01100
01910*        C        MADE EQUATION 3.1.                                   RCP01110
01911*   45   190   RC=(A2+A3)/(6.28318*UPL*SY*SZ*C1)                        RCP01120
01912*   46         RETURN                                                   RCP01130
01913*        C                                                              RCP01140
01914*        C->->->->SECTION RCP.E - UNSTABLE, ASSURED OF UNIFORM MIXING.  RCP01150
01915*        C                                                              RCP01160
01916*        C          IF SIGMA-Z IS GREATER THAN 1.6 TIMES THE MIXING HEIGHT,  RCP01170
01917*        C           THE DISTRIBUTION BELOW THE MIXING HEIGHT IS UNIFORM WITH  RCP01180
01918*        C           HEIGHT REGARDLESS OF SOURCE HEIGHT OR RECEPTOR HEIGHT BECAUSE RCP01190
01919*        C           OF REPEATED EDDY REFLECTIONS FROM THE GROUND AND THE MIXING HTRCP01200
01920*   47   200   IF (SZ/HL.LE.1.6) GO TO 220                              RCP01210
01921*        C        MADE EQUATION 3.5.                                   RCP01220
01922*   48         RC=1./(2.5066*UPL*SY*HL*C1)                              RCP01230
01923*   49         RETURN                                                   RCP01240
01924*        C        INITIAL VALUE OF AN SET = 0.                         RCP01250
01925*        C          AN - THE NUMBER OF TIMES THE SUMMATION TERM IS EVALUATED  RCP01260
01926*        C                AND ADDED IN.                                RCP01270
01927*   50   220   AN=0.                                                    RCP01280
01928*   51         IF (Z) 40,380,230                                        RCP01290
01929*        C                                                              RCP01300
01930*        C->->->->SECTION RCP.F - UNSTABLE, CALCULATE MULTIPLE EDDY     RCP01310
01931*        C                          REFLECTIONS, Z IS NON-ZERO.         RCP01320
01932*        C                                                              RCP01330
01933*        C        STATEMENTS 220-260 CALCULATE RC, THE RELATIVE CONCENTRATION,  RCP01340
01934*        C          USING THE EQUATION DISCUSSED ABOVE.  SEVERAL INTERMEDIATE  RCP01350
01935*        C          VARIABLES ARE USED TO AVOID REPEATING CALCULATIONS.  RCP01360
01936*        C          CHECKS ARE MADE TO BE SURE THAT THE ARGUMENT OF THE  RCP01370
01937*        C          EXPONENTIAL FUNCTION IS NEVER GREATER THAN 50 (OR LESS THAN  RCP01380
01938*        C          -50).                                               RCP01390
01939*        C        CALCULATE MULTIPLE EDDY REFLECTIONS FOR RECEPTOR HEIGHT Z.  RCP01400
01940*   52   230   A1=1./(6.28318*UPL*SY*SZ*C1)                             RCP01410
01941*   53         C2=2.*SZ*SZ                                              RCP01420
01942*   54         A2=0.                                                    RCP01430
01943*   55         A3=0.                                                    RCP01440
01944*   56         CA=Z-H                                                   RCP01450
01945*   57         CB=Z+H                                                   RCP01460
01946*   58         C3=CA*CA/C2                                              RCP01470
01947*   59         C4=CB*CB/C2                                              RCP01480
01948*   60         IF (C3.GE.50.) GO TO 250                                 RCP01490
01949*   61         A2=1./EXP(C3)                                            RCP01500
```

```
01950*        62    250   IF (C4.GE.50.) GO TO 270                                  RCP01510
01951*        63          A3=1./EXP(C4)                                             RCP01520
01952*        64    270   SUM=0.                                                    RCP01530
01953*        65          THL=2.*HL                                                 RCP01540
01954*        66    280   AN=AN+1.                                                  RCP01550
01955*        67          A4=0.                                                     RCP01560
01956*        68          A5=0.                                                     RCP01570
01957*        69          A6=0.                                                     RCP01580
01958*        70          A7=0.                                                     RCP01590
01959*        71          C5=AN*THL                                                 RCP01600
01960*        72          CC=CA-C5                                                  RCP01610
01961*        73          CD=CB-C5                                                  RCP01620
01962*        74          CE=CA+C5                                                  RCP01630
01963*        75          CF=CB+C5                                                  RCP01640
01964*        76          C6=CC*CC/C2                                               RCP01650
01965*        77          C7=CD*CD/C2                                               RCP01660
01966*        78          C8=CE*CE/C2                                               RCP01670
01967*        79          C9=CF*CF/C2                                               RCP01680
01968*        80          IF (C6.GE.50.) GO TO 300                                  RCP01690
01969*        81          A4=1./EXP(C6)                                             RCP01700
01970*        82    300   IF (C7.GE.50.) GO TO 320                                  RCP01710
01971*        83          A5=1./EXP(C7)                                             RCP01720
01972*        84    320   IF (C8.GE.50.) GO TO 340                                  RCP01730
01973*        85          A6=1./EXP(C8)                                             RCP01740
01974*        86    340   IF (C9.GE.50.) GO TO 360                                  RCP01750
01975*        87          A7=1./EXP(C9)                                             RCP01760
01976*        88    360   T=A4+A5+A6+A7                                             RCP01770
01977*        89          SUM=SUM+T                                                 RCP01780
01978*        90          IF (T.GE.0.01) GO TO 280                                  RCP01790
01979*        91          RC=A1*(A2+A3+SUM)                                         RCP01800
01980*        92          RETURN                                                    RCP01810
01981*                C                                                             RCP01820
01982*                C->->->->SECTION RCP.6 - UNSTABLE, CALCULATE MULTIPLE EDDY    RCP01830
01983*                C                          REFLECTIONS, Z IS ZERO.            RCP01840
01984*                C                                                             RCP01850
01985*                C        CALCULATE MULTIPLE EDDY REFLECTIONS FOR GROUND LEVEL RECEPTOR  RCP01860
01986*                C        HEIGHT.                                              RCP01870
01987*        93    380   A1=1./(6.2831*UPL*SY*SZ*C1)                               RCP01880
01988*        94          A2=0.                                                     RCP01890
01989*        95          C2=2.*SZ*SZ                                               RCP01900
01990*        96          C3=H*H/C2                                                 RCP01910
01991*        97          IF (C3.GE.50.) GO TO 400                                  RCP01920
01992*        98          A2=2./EXP(C3)                                             RCP01930
01993*        99    400   SUM=0.                                                    RCP01940
01994*       100          THL=2.*HL                                                 RCP01950
01995*       101    410   AN=AN+1.                                                  RCP01960
01996*       102          A4=0.                                                     RCP01970
01997*       103          A6=0.                                                     RCP01980
01998*       104          C5=AN*THL                                                 RCP01990
01999*       105          CC=H-C5                                                   RCP02000
```

```
02000*   106          CE=H*C5                                                RCP02010
02001*   107          C6=CC*CC/C2                                            RCP02020
02002*   108          C8=CE*CE/C2                                            RCP02030
02003*   109          IF (C6.GE.50.) GO TO 430                               RCP02040
02004*   110          A4=2./EXP(C6)                                          RCP02050
02005*   111    430   IF (C8.GE.50.) GO TO 450                               RCP02060
02006*   112          A6=2./EXP(C8)                                          RCP02070
02007*   113    450   T=A4+A6                                                RCP02080
02008*   114          SUM=SUM+T                                              RCP02090
02009*   115          IF (T.GE.0.01) GO TO 410                               RCP02100
02010*   116          RC=A1*(A2+SUM)                                         RCP02110
02011*   117          RETURN                                                 RCP02120
02012*              C                                                        RCP02130
02013*              C->->->->SECTION RCP.H - FORMAT                          RCP02140
02014*              C                                                        RCP02150
02015*              C** *   SECTIONS OF SUBROUTINE RCP.                      RCP02160
02016*              C          SECTION RCP.A -  COMMON.                      RCP02170
02017*              C          SECTION RCP.B -  EXPLANATIONS AND COMPUTATIONS COMMON TO ALL  RCP02180
02018*              C                            CONDITIONS.                 RCP02190
02019*              C          SECTION RCP.C -  STABLE OR UNLIMITED MIXING, Z IS ZERO.  RCP02200
02020*              C          SECTION RCP.D -  STABLE OR UNLIMITED MIXING, Z IS NON-ZERO.  RCP02210
02021*              C          SECTION RCP.E -  UNSTABLE, ASSURED OF UNIFORM MIXING.  RCP02220
02022*              C          SECTION RCP.F -  UNSTABLE, CALCULATE MULTIPLE EDDY  RCP02230
02023*              C                            REFLECTIONS; Z IS NON-ZERO.  RCP02240
02024*              C          SECTION RCP.G -  UNSTABLE, CALCULATE MULTIPLE EDDY  RCP02250
02025*              C                            REFLECTIONS; Z IS ZERO.  RCP02260
02026*              C          SECTION RCP.H -  FORMAT.                      RCP02270
02027*              C                                                        RCP02280
02028*   118    470   FORMAT (1H0,'BOTH H AND Z ARE ABOVE THE MIXING HEIGHT SO A RELIABLRCP02290
02029*                 1E COMPUTATION CAN NOT BE MADE.')                     RCP02300
02030*              C                                                        RCP02310
02031*   119          END                                                    RCP02320
```

SUBROUTINE RCP

SYMBOL		REFERENCES									
20	-	6	8*								
40	-	7	8	10*	12	24	29	31	51		
50	-	5	7	7	12*						
70	-	14	19*								
100	-	20	26*								
120	-	26	28*								
130	-	29	30*								
150	-	29	35*								
170	-	41	43*								
190	-	43	45*								
200	-	27	47*								
220	-	47	50*								
230	-	51	52*								
250	-	60	62*								
270	-	62	64*								
280	-	66*	90								
300	-	80	82*								
320	-	82	84*								
340	-	84	86*								
360	-	86	88*								
380	-	51	93*								
400	-	97	99*								
410	-	101*	115								
430	-	109	111*								
450	-	111	113*								
470	-	9WR	118*								
A1	-	52=	91	93=	116						
A2	-	32=	33	35=	42=	45	54=	61=	91	94=	98=
		116									
A3	-	36=	44=	45	55=	63=	91				
A4	-	67=	81=	88	102=	110=	113				
A5	-	68=	83=	88							
A6	-	69=	85=	88	103=	112=	113				
A7	-	70=	87=	88							
AN	-	50=	66=	66	71	101=	101	104			
C1	-	19=	25=	33	45	48	52	93			
C2	-	28=	30	39	40	53=	58	59	76	77	78
		79	95=	96	107	108					
C3	-	30=	31	32	39=	41	42	58=	60	61	96=
		97	99								
C4	-	40=	43	44	59=	62	63				
C5	-	71=	72	73	74	75	104=	105	106		
C6	-	76=	80	81	107=	109	110				
C7	-	77=	82	83							
C8	-	78=	84	85	108=	111	112				
C9	-	79=	86	87							
CA	-	37=	39	39	56=	58	58	72	74		
CB	-	38=	40	40	57=	59	59	73	75		

SUBROUTINE RCP

CC	-	72=	76	76	105=	107	107				
CD	-	73=	77	77							
CE	-	74=	78	78	106=	108	108				
CF	-	75=	79	79							
DELH	-	3C0	15								
DUM	-	15=	16=	16	16	17	18	22=	23	23	
EXP	-	25	32	42	44	61	63	81	83	85	87
		98	110	112							
H	-	3C0	6	30	30	37	38	56	57	96	96
		105	106								
HL	-	3C0	6	7	8	27	47	48	65	100	
IO	-	4=	9WR								
IOPT	-	2C0	14								
KST	-	3C0	5	26							
MPOR	-	2C0									
MPR	-	3C0									
PGY7	-	13									
RC	-	3C0	10=	33=	45=	48=	91=	116=			
RCP	-	1EY									
SQRT	-	17	18								
SUM	-	64=	89=	89	91	99=	114=	114	116		
SY	-	3C0	17=	17	17	22	33	45	48	52	93
SZ	-	3C0	18=	18	18	28	28	33	45	47	52
		53	53	93	95	95					
T	-	88=	89	90	113=	114	115				
TEMP	-	23=	24	25							
THL	-	65=	71	100=	104						
UPL	-	3C0	33	45	48	52	93				
X	-	3C0	12								
Y	-	3C0	20	21							
YD	-	21=	22								
Z	-	3C0	7	8	29	37	38	51	56	57	

-+-+-+

```
02303*   1          SUBROUTINE PGYZ                                                PYZ00010
02304*        C        VERTICAL DISPERSION PARAMETER VALUE, SZ DETERMINED BY       PYZ00020
02305*        C         SZ = A * X ** B WHERE A AND B ARE FUNCTIONS OF BOTH STABILITY PYZ00030
02306*        C         AND RANGE OF X.                                            PYZ00040
02307*        C        HORIZONTAL DISPERSION PARAMETER VALUE, SY DETERMINED BY     PYZ00050
02308*        C         LOGARITHMIC INTERPOLATION OF PLUME HALF-ANGLE ACCORDING TO PYZ00060
02309*        C         DISTANCE AND CALCULATION OF 1/2.15 TIMES HALF-ARC LENGTH.  PYZ00070
02310*   2          COMMON /MPR/ IPL,Z,H,HL,X,Y,KST,DELH,SY,SZ,RC                  PYZ00080
02311*   3          DIMENSION XA(7), XB(2), XD(5), XE(8), XF(9), AA(8), BA(8), AB(3),PYZ00090
02312*              1BB(3), AD(6), BD(6), AE(9), BE(9), AF(10), BF(10)              PYZ00100
02313*   4          DATA XA /.5,.4,.3,.25,.2,.15,.1/                               PYZ00110
02314*   5          DATA XB /.4,.2/                                                PYZ00120
02315*   6          DATA XD /30.,10.,3.,1.,.3/                                     PYZ00130
02316*   7          DATA XE /40.,20.,10.,4.,2.,1.,.3,.1/                           PYZ00140
02317*   8          DATA XF /60.,30.,15.,7.,3.,2.,1.,.7,.2/                        PYZ00150
02318*   9          DATA AA /853.85,346.75,258.89,217.41,179.52,170.22,158.08,122.8/ PYZ00160
02319*  10          DATA BA /2.1166,1.7283,1.8098,1.2684,1.1262,1.0932,1.0542,.9847/ PYZ00170
02320*  11          DATA AB /109.30,98.483,90.673/                                 PYZ00180
02321*  12          DATA BB /1.0971,0.98332,0.93198/                               PYZ00190
02322*  13          DATA AD /44.053,36.650,33.504,32.093,32.093,34.459/            PYZ00200
02323*  14          DATA BD /0.51179,0.56589,0.60486,0.64403,0.81066,0.86974/      PYZ00210
02324*  15          DATA AE /47.618,35.420,26.970,24.703,22.534,21.628,21.628,23.331,2PYZ00220
02325*              14.26/                                                         PYZ00230
02326*  16          DATA BE /0.29592,0.37615,0.46713,0.50527,0.57154,0.63077,0.75660,0PYZ00240
02327*              1.81956,0.8366/                                                PYZ00250
02328*  17          DATA AF /34.219,27.074,22.651,17.836,16.187,14.823,13.953,13.953,1PYZ00260
02329*              14.857,15.209/                                                 PYZ00270
02330*  18          DATA BF /0.21716,0.27436,0.32681,0.41507,0.46490,0.50503,0.63227,0PYZ00280
02331*              1.68865,0.78407,0.81558/                                       PYZ00290
02332*  19          XY=X                                                           PYZ00300
02333*  20          GO TO (10,40,70,80,110,140), KST                               PYZ00310
02334*        C         STABILITY A                                                PYZ00320
02335*  21    10    TH=(24.167-2.5734*ALOG(XY))/57.2958                            PYZ00330
02336*  22          IF (X.GT.3.1) GO TO 170                                        PYZ00340
02337*  23          DO 20 ID=1,7                                                   PYZ00350
02338*  24          IF (X.GE.XA(ID)) GO TO 30                                      PYZ00360
02339*  25    20    CONTINUE                                                       PYZ00370
02340*  26          ID=8                                                           PYZ00380
02341*  27    30    SZ=AA(ID)*Y**BA(ID)                                            PYZ00390
02342*  28          GO TO 190                                                      PYZ00400
02343*        C         STABILITY B                                                PYZ00410
02344*  29    40    TH=(18.333-1.8096*ALOG(XY))/57.2958                            PYZ00420
02345*  30          IF (X.GT.35.) GO TO 170                                        PYZ00430
02346*  31          DO 50 ID=1,2                                                   PYZ00440
02347*  32          IF (X.GE.XB(ID)) GO TO 60                                      PYZ00450
02348*  33    50    CONTINUE                                                       PYZ00460
02349*  34          ID=3                                                           PYZ00470
02350*  35    60    SZ=AB(ID)*Y**BB(ID)                                            PYZ00480
02351*  36          GO TO 180                                                      PYZ00490
02352*        C         STABILITY C                                                PYZ00500
```

```
02353*   37   70    TH=(12.5-1.0857*ALOG(XY))/57.2958                    PYZ00510
02354*   38         SZ=61.141*X**0.91465                                 PYZ00520
02355*   39         GO TO 180                                            PYZ00530
02356*              C     STABILITY D                                    PYZ00540
02357*   40   80    TH=(8.3333-0.7238 2*ALOG(XY))/57.2958                PYZ00550
02358*   41         DO 90 ID=1,5                                         PYZ00560
02359*   42         IF (X.GE.XD(ID)) GO TO 100                           PYZ00570
02360*   43   90    CONTINUE                                             PYZ00580
02361*   44         ID=6                                                 PYZ00590
02362*   45   100   SZ=AD(ID)*X**BD(ID)                                  PYZ00600
02363*   46         GO TO 180                                            PYZ00610
02364*              C     STABILITY E                                    PYZ00620
02365*   47   110   TH=(6.25-0.5828 7*ALOG(XY))/57.2958                  PYZ00630
02366*   48         DO 120 ID=1,8                                        PYZ00640
02367*   49         IF (X.GE.XE(ID)) GO TO 130                           PYZ00650
02368*   50   120   CONTINUE                                             PYZ00660
02369*   51         ID=9                                                 PYZ00670
02370*   52   130   SZ=AE(ID)*X**BE(ID)                                  PYZ00680
02371*   53         GO TO 180                                            PYZ00690
02372*              C     STABILITY F                                    PYZ00700
02373*   54   140   TH=(4.1667-0.36191*ALOG(XY))/57.2958                 PYZ00710
02374*   55         DO 150 ID=1,9                                        PYZ00720
02375*   56         IF (X.GE.XF(ID)) GO TO 160                           PYZ00730
02376*   57   150   CONTINUE                                             PYZ00740
02377*   58         ID=10                                                PYZ00750
02378*   59   160   SZ=AF(ID)*X**BF(ID)                                  PYZ00760
02379*   60         GO TO 180                                            PYZ00770
02380*   61   170   SZ=5000.                                             PYZ00780
02381*   62         GO TO 190                                            PYZ00790
02382*   63   180   IF (SZ.GT.5000.) SZ=5000.                            PYZ00800
02383*   64   190   SY=465.116*XY*SIN(TH)/COS(TH)                        PYZ00810
02384*              C     465.116 = 1000. (M/KM) / 2.15                  PYZ00820
02385*   65         RETURN                                               PYZ00830
02386*              C                                                    PYZ00840
02387*   66         END                                                  PYZ00850
```

SUBROUTINE PGYZ

SYMBOL		REFERENCES									
10	-	20	21*								
20	-	23	25*								
30	-	24	27*								
40	-	20	29*								
50	-	31	33*								
60	-	32	35*								
70	-	20	37*								
80	-	20	40*								
90	-	41	43*								
100	-	42	45*								
110	-	20	47*								
120	-	48	50*								
130	-	49	52*								
140	-	20	54*								
150	-	55	57*								
160	-	56	59*								
170	-	22	30	61*							
180	-	36	39	46	53	60	63*				
190	-	28	62	64*							
AA	-	3DI	9DA	27							
AB	-	3DI	11DA	35							
AD	-	3DI	13DA	45							
AE	-	3DI	15DA	52							
AF	-	3DI	17DA	59							
ALOG	-	21	29	37	40	47	54				
BA	-	3DI	10DA	27							
BB	-	3DI	12DA	35							
BD	-	3DI	14DA	45							
BE	-	3DI	16DA	52							
BF	-	3DI	18DA	59							
COS	-	64									
DELH	-	2C0									
H	-	2C0									
HI	-	2C0									
ID	-	23	24	26=	27	27	31	32	34=	35	35
		41	42	44=	45	45	48	49	51=	52	52
		55	56	58=	59	59					
KST	-	2C0	20								
MPR	-	2C0									
PGYZ	-	1EY									
RC	-	2C0									
SIN	-	64									
SY	-	2C0	64=								
SZ	-	2C0	27=	35=	38=	45=	52=	59=	61=	63	63=
TH	-	21=	29=	37=	39=	47=	54=	64	64		
UPL	-	2C0									
Y	-	2C0	19	22	24	27	30	32	35	38	42
		45	49	52	56	59					

SUBROUTINE PGYZ

```
XA      -     3DI     4DA     24
XB      -     3DI     5DA     32
XC      -     3DI     6DA     42
XE      -     3DI     7DA     49
XF      -     3DI     8DA     56
XY      -    19=     21      29      37      40      47      54      64
Y       -     2C0
Z       -     2C0
-+-+-+
```

```
      SUBROUTINE RANK (L)                                               RNK00010
C        CALLED BY MPTER TO ARRANGE CONCENTRATIONS OF VARIOUS AVG       RNK00020
C        TIMES INTO HIGH-FIVE TABLES...THAT IS, ARRAYS STORING          RNK00030
C        THE HIGHEST FIVE CONCENTRATIONS FOR EACH RECEPTOR FOR          RNK00040
C        EACH AVG TIME.                                                 RNK00050
C        VARIABLES OUTPUT:                                              RNK00060
C             HMAXA(J,K,L)  CONCENTRATIONS ACCORDING TO                 RNK00070
C                  J : RANK OF CONC. (1-5)                              RNK00080
C                  K : RECEPTOR NUMBER                                  RNK00090
C                  L : AVG TIME                                         RNK00100
C             NDAY(J,K,L) : ASSOCIATED DAY OF CONC.                     RNK00110
C             IHR(J,K,L) : ENDING HOUR OF CONC.                         RNK00120
      COMMON/MR/HMAXA(5,180,5),NDAY(5,180,5),IHR(5,180,5),CONC(180,5),  RNK00130
     1          JDAY,NR                                                 RNK00140
      COMMON /MPO/ NRECEP,NAVG,NB,LH,NPT,IDATE(2),RREC(180),SREC(180),7RRNK00150
     1(180),ELR(180),PHCHI(180),PHSIGS(180,26),HSAV(250),DSAV(250),PCHI (RNK00160
     2180),PSIGS(180,26),IPOL                                           RNK00170
      IO=6                                                              RNK00180
      DO 50 K=1,NRECEP                                                  RNK00190
      IF (CONC(K,L).LE.HMAXA(5,K,L)) GO TO 50                           RNK00200
      DO 10 J=1,5                                                       RNK00210
      IF (CONC(K,L).GT.HMAXA(J,K,L)) GO TO 20                           RNK00220
C          CONCENTRATION IS ONE OF THE TOP FIVE                         RNK00230
   10 CONTINUE                                                          RNK00240
      WRITE (IO,70)                                                     RNK00250
      GO TO 50                                                          RNK00260
C        THE FOLLOWING DO-LOOP HAS THE EFFECT OF INSERTING A NEW        RNK00270
C        CONCENTRATION ENTRY INTO ITS PROPER POSITION WHILE SHIFTING    RNK00280
C        DOWN THE 'OLD' LOWER CONCENTRATIONS THUS ESTABLISHING THE      RNK00290
C        'HIGH-FIVE' CONCENTRATION TABLE.                               RNK00300
   20 IF (J.EQ.5) GO TO 40                                              RNK00310
      DO 30 IJ=4,J,-1                                                   RNK00320
      IJP1=IJ+1                                                         RNK00330
      HMAXA(IJP1,K,L)=HMAXA(IJ,K,L)                                     RNK00340
      NDAY(IJP1,K,L) = NDAY(IJ,K,L)                                     RNK00350
   30 IHR(IJP1,K,L) = IHR(IJ,K,L)                                       RNK00360
C          INSERT LATEST CONC, DAY AND ENDING HR INTO THE               RNK00370
C          PROPER RANK IN THE HIGH-FIVE TABLE                           RNK00380
   40 HMAXA(J,K,L)=CONC(K,L)                                            RNK00390
      NDAY(J,K,L) = JDAY                                                RNK00400
      IHR(J,K,L) = LH                                                   RNK00410
   50 CONTINUE                                                          RNK00420
      DO 60 K=1,NRECEP                                                  RNK00430
      CONC(K,L)=0.                                                      RNK00440
   60 CONTINUE                                                          RNK00450
      RETURN                                                            RNK00460
C                                                                       RNK00470
   70 FORMAT (1X,'   ***ERROR IN FINDING THE MAX CONCENTRATION***')     RNK00480
C                                                                       RNK00490
```

SUBROUTINE RANK(L)

```
01799*          27          END                                                                    RNK00500

SYMBOL      = = =
```

```
01443*   1          SUBROUTINE OUTHR                                          OUT00010
01444*          C      THIS SUBROUTINE PROVIDES OUTPUT CONCENTRATIONS IN      OUT00020
01445*          C      MICROGRAMS PER CUBIC METER FOR EACH HOUR IN TWO WAYS:  OUT00030
01446*          C         1) CONTRIBUTIONS FROM SIGNIFICANT SOURCES, AND      OUT00040
01447*          C         2) SUMMARIES.                                       OUT00050
01448*          C      BEYOND ENTRY POINT OUTAVG THE SUBROUTINE PROVIDES      OUT00060
01449*          C      CONCENTRATION OUTPUT FOR EACH AVERAGING PERIOD AGAIN   OUT00070
01450*          C      IN THE ABOVE MANNER.                                   OUT00080
01451*          C                                                             OUT00090
01452*          C->->->->SECTION OUTHR.A - COMMON, DIMENSION, AND DATA.       OUT00100
01453*          C                                                             OUT00110
01454*   2          COMMON /MPOR/ IOPT(25)                                    OUT00120
01455*   3          COMMON /MPO/ NRECEP,NAVG,NB,LH,NPT,IDATE(2),RREC(180),SREC(180),ZROUT00130
01456*              1(180),ELR(180),PHCHI(180),PHSIGS(180,26),HSAV(250),DSAV(250),PCHE(OUT00140
01457*              2180),PSIGS(180,26),IPOL                                  OUT00150
01458*   4          COMMON /MO/ QTHETA(24),QU(24),IKST(24),QHL(24),QTEMP(24),MPS(25),NOUT00160
01459*              1SIGP,IO,LINE1(20),LINE2(20),LINE3(20),RNAME(2,180),IRANK(180),STAROUT00170
01460*              2(5,180)                                                  OUT00180
01461*   5          DIMENSION IPOLT(2)                                        OUT00190
01462*   6          DATA IPOLT /'SO2 ','PART'/                                OUT00200
01463*   7          IPOLU=IPOLT(1)                                            OUT00210
01464*   8          IF (IPOL.EQ.4) IPOLU=IPOLT(2)                             OUT00220
01465*          C      OPTION(11): PRINT ONLY THE HOURLY SUMMARIES.           OUT00230
01466*   9          IF (IOPT(11).EQ.1) GO TO 100                              OUT00240
01467*          C                                                             OUT00250
01468*          C->->->->SECTION OUTHR.B - WRITE HOURLY CONTRIBUTION TITLE.   OUT00260
01469*          C                                                             OUT00270
01470*   10         WRITE (IO,350) LINE1,LINE2,LINE3                          OUT00280
01471*   11         WRITE (IO,360)IPOLU,IDATE,LH                              OUT00290
01472*          C                                                             OUT00300
01473*          C->->->->SECTION OUTHR.C - WRITE HOURLY MET DATA.             OUT00310
01474*          C                                                             OUT00320
01475*   12         IF (IOPT(12).EQ.1) GO TO 10                               OUT00330
01476*   13         WRITE (IO,450)                                            OUT00340
01477*   14         WRITE (IO,460) LH,QTHETA(LH),QU(LH),QHL(LH),QTEMP(LH),IKST(LH)  OUT00350
01478*          C                                                             OUT00360
01479*          C->->->->SECTION OUTHR.D - WRITE FINAL PLUME HEIGHT AND DISTANCE OUT00370
01480*          C                                FINAL RISE.                  OUT00380
01481*          C                                                             OUT00390
01482*   15     10     IF (IOPT(13).EQ.1) GO TO 20                            OUT00400
01483*   16             WRITE (IO,470) (I,I=1,10)                              OUT00410
01484*          C          HSAV ARE THE CALCULATED PLUME HEIGHTS FOR THIS HOUR OUT00420
01485*   17             WRITE (IO,490) (HSAV(I),I=1,NPT)                       OUT00430
01486*   18             WRITE (IO,490) (DSAV(I),I=1,NPT)                       OUT00440
01487*          C                                                             OUT00450
01488*          C->->->->SECTION OUTHR.E - WRITE HRLY SIGNIFICANT SOURCE CONTRI.OUT00460
01489*          C                                                             OUT00470
01490*   19     20     IF (NSIGP.GT.10) GO TO 40                              OUT00480
01491*          C          PRINT FIRST PAGE OF OUTPUT AND TOTALS FOR 10 OR LESS SIGNIF SOUOUT00490
01492*   20             WRITE (IO,370)                                         OUT00500
```

```
01493*   21          WRITE (IO,380) (I,I=1,NSIGP)                                OUT00510
01494*   22          WRITE (IO,390)                                              OUT00520
01495*   23          WRITE (IO,380) (MPS(I),I=1,NSIGP)                           OUT00530
01496*   24          WRITE (IO,400)                                              OUT00540
01497*   25          DO 70 K=1,NRECEP                                            OUT00550
01498*   26          WRITE (IO,410) K,STAR(1,K),STAR(2,K),(PHSIGS(K,I),I=1,NSIGP) OUT00560
01499*          C       PRINT TOTALS                                            OUT00570
01500*   27          WRITE (IO,420) PHSIGS(K,26),PHCHI(K)                        OUT00580
01501*   28     30   CONTINUE                                                    OUT00590
01502*   29          GO TO 100                                                   OUT00600
01503*          C       PRINT FIRST PAGE FOR MORE THAN 10 SIGNIFICANT SOURCES.  OUT00610
01504*   30     40   WRITE (IO,370)                                              OUT00620
01505*   31          WRITE (IO,380) (I,I=1,10)                                   OUT00630
01506*   32          WRITE (IO,430) (MPS(I),I=1,10)                              OUT00640
01507*   33          WRITE (IO,400)                                              OUT00650
01508*   34          DO 50 K=1,NRECEP                                            OUT00660
01509*   35     50   WRITE (IO,410) K,STAR(1,K),STAR(2,K),(PHSIGS(K,I),I=1,10)   OUT00670
01510*   36          IF (NSIGP.GT.20) GO TO 70                                   OUT00680
01511*          C       PRINT SECOND PAGE AND TOTALS FOR 11 TO 20 SIGNIFICANT SOURCES OUT00690
01512*   37          WRITE (IO,350) LINE1,LINE2,LINE3                            OUT00700
01513*   38          WRITE (IO,360)IPOLU,IDATE,LH                                OUT00710
01514*   39          WRITE (IO,370)                                              OUT00720
01515*   40          WRITE (IO,380) (I,I=11,NSIGP)                               OUT00730
01516*   41          WRITE (IO,390)                                              OUT00740
01517*   42          WRITE (IO,380) (MPS(I),I=11,NSIGP)                          OUT00750
01518*   43          WRITE (IO,400)                                              OUT00760
01519*   44          DO 60 K=1,NRECEP                                            OUT00770
01520*   45          WRITE (IO,410) K,STAR(1,K),STAR(2,K),(PHSIGS(K,I),I=11,NSIGP) OUT00780
01521*   46     60   WRITE (IO,420) PHSIGS(K,26),PHCHI(K)                        OUT00790
01522*   47          GO TO 100                                                   OUT00800
01523*          C       WRITE SECOND PAGE FOR MORE THAN 20 SIGNIFICANT SOURCES. OUT00810
01524*   48     70   WRITE (IO,350) LINE1,LINE2,LINE3                            OUT00820
01525*   49          WRITE (IO,360)IPOLU,IDATE,LH                                OUT00830
01526*   50          WRITE (IO,370)                                              OUT00840
01527*   51          WRITE (IO,380) (I,I=11,20)                                  OUT00850
01528*   52          WRITE (IO,430) (MPS(I),I=11,20)                             OUT00860
01529*   53          WRITE (IO,400)                                              OUT00870
01530*   54          DO 80 K=1,NRECEP                                            OUT00880
01531*   55     80   WRITE (IO,410) K,STAR(1,K),STAR(2,K),(PHSIGS(K,I),I=11,20) OUT00890
01532*   56          WRITE (IO,350) LINE1,LINE2,LINE3                            OUT00900
01533*   57          WRITE (IO,360)IPOLU,IDATE,LH                                OUT00910
01534*   58          WRITE (IO,370)                                              OUT00920
01535*          C       WRITE LAST PAGE AND TOTALS FOR MORE THAN 20 SIGNIF. SOURCES. OUT00930
01536*   59          WRITE (IO,380) (I,I=21,NSIGP)                               OUT00940
01537*   60          WRITE (IO,390)                                              OUT00950
01538*   61          WRITE (IO,390) (MPS(I),I=21,NSIGP)                          OUT00960
01539*   62          WRITE (IO,400)                                              OUT00970
01540*   63          DO 90 K=1,NRECEP                                            OUT00980
01541*   64          WRITE (IO,410) K,STAR(1,K),STAR(2,K),(PHSIGS(K,I),I=21,NSIGP) OUT00990
01542*   65     90   WRITE (IO,420) PHSIGS(K,26),PHCHI(K)                        OUT01000
```

```
01543*          C        OPTION(14): SKIP OUTPUT OF THE HOURLY SUMMARIES.          OUT01010
01544*     66   100   IF (IOPT(14).EQ.1) GO TO 170                                 OUT01020
01545*          C                                                                  OUT01030
01546*          C->->->->SECTION OUTHR.F - WRITE HOURLY SUMMARY TITLE.             OUT01040
01547*          C                                                                  OUT01050
01548*     67        WRITE (IO,350) LINE1,LINE2,LINE3                              OUT01060
01549*     68        WRITE (IO,440)IPOLU,IDATE,LH                                  OUT01070
01550*          C                                                                  OUT01080
01551*          C->->->->SECTION OUTHR.G - WRITE HOURLY MET DATA.                  OUT01090
01552*          C                                                                  OUT01100
01553*     69        IF (IOPT(15).EQ.1) GO TO 110                                  OUT01110
01554*     70        WRITE (IO,450)                                                OUT01120
01555*     71        WRITE (IO,460) LH,QTHETA(LH),QU(LH),QHL(LH),QTEMP(LH),IKST(LH) OUT01130
01556*          C                                                                  OUT01140
01557*          C->->->->SECTION OUTHR.H - WRITE FINAL PLUME HEIGHT AND            OUT01150
01558*          C        DISTANCE TO FINAL RISE.                                   OUT01160
01559*          C                                                                  OUT01170
01560*     72   110   IF (IOPT(16).EQ.1) GO TO 120                                 OUT01180
01561*     73        WRITE (IO,470) (I,I=1,10)                                     OUT01190
01562*          C        HSAV ARE THE CALCULATED PLUME HEIGHTS FOR THIS HOUR       OUT01200
01563*     74        WRITE (IO,480) (HSAV(I),I=1,NPT)                              OUT01210
01564*     75        WRITE (IO,490) (DSAV(I),I=1,NPT)                              OUT01220
01565*          C                                                                  OUT01230
01566*          C->->->->SECTION OUTHR.I - WRITE HOURLY SUMMARY TABLE.             OUT01240
01567*          C                                                                  OUT01250
01568*     76   120   WRITE (IO,500)                                               OUT01260
01569*          C        CALCULATE GRAND TOTALS AND RANK CONCENTRATIONS            OUT01270
01570*     77        DO 130 K=1,NRECEP                                             OUT01280
01571*          C        HSAV IS USED AS A DUMMY VARIABLE FOR THE REMAINDER OF THIS OUT01290
01572*          C        SUBROUTINE. IT IS ZEROED AGAIN IN PTR BEFORE ITS NORMAL USE. OUT01300
01573*     78   130   HSAV(K)=PHCHI(K)                                             OUT01310
01574*          C        DETERMINE RANKING ACCORDING TO CONCENTRATION              OUT01320
01575*     79        DO 150 I=1,NRECEP                                             OUT01330
01576*     80        CMAX=-1.0                                                     OUT01340
01577*     81        DO 140 K=1,NRECEP                                             OUT01350
01578*     82        IF (HSAV(K).LE.CMAX) GO TO 140                                OUT01360
01579*     83        CMAX=HSAV(K)                                                  OUT01370
01580*     84        LMAX=K                                                        OUT01380
01581*     85   140   CONTINUE                                                     OUT01390
01582*     86        IRANK(LMAX)=I                                                 OUT01400
01583*     87        HSAV(LMAX)=-1.0                                               OUT01410
01584*     88   150   CONTINUE                                                     OUT01420
01585*     89        DO 160 K=1,NRECEP                                             OUT01430
01586*     90        WRITE (IO,510) K,STAR(1,K),STAR(2,K),(RNAME(J,K),J=1,2),REC(K),SPOUT01440
01587*               1EC(K),ZR(K),ELR(K),PHSIGS(K,26),PHCHI(K),IRANK(K)            OUT01450
01588*     91   160   CONTINUE                                                     OUT01460
01589*     92   170   RETURN                                                       OUT01470
01590*          C                                                                  OUT01480
01591*          C->->->->SECTION OUTHR.J - ENTRY POINT FOR AVERAGING TIME          OUT01490
01592*          C                                                                  OUT01500
```

```
01593*   93          ENTRY OUTAVG                                          OUT01510
01594*               C        AT THIS ENTRY POINT, CONCENTRATION OUTPUT    OUT01520
01595*               C     IN MICROGRAMS PER CUBIC METER ARE PRINTED FOR THE OUT01530
01596*               C     AVERAGING PERIOD. CONTRIBUTIONS AND/OR SUMMARY  OUT01540
01597*               C     INFORMATION IS AVAILABLE.                       OUT01550
01598*               C     AVERAGE CONCENTRATIONS OVER SPECIFIED TIME PERIOD OUT01560
01599*   94          DO 190 K=1,NRECEP                                     OUT01570
01600*   95          PCHI(K)=PCHI(K)/NAVG                                  OUT01580
01601*   96          HSAV(K)=PCHI(K)                                       OUT01590
01602*   97          DO 180 I=1,26                                         OUT01600
01603*   98     180  PSIGS(K,I)=PSIGS(K,I)/NAVG                            OUT01610
01604*   99     190  CONTINUE                                              OUT01620
01605*               C     OPTION(17) - SKIP OUTPUT OF THE AVERAGED CONTRIBUTIONS. OUT01630
01606*  100          IF (IOPT(17).EQ.1) GO TO 270                          OUT01640
01607*               C->->->->SECTION OUTHR.K - WRITE AVERAGING-TIME SIGNIFICANT OUT01650
01608*               C                SOURCE CONTRIBUTIONS.                OUT01660
01609*  101          WRITE (IO,350) LINE1,LINE2,LINE3                      OUT01670
01610*  102          WRITE (IO,520) NAVG,IPOLU,IDATE,NR                    OUT01680
01611*  103          IF (NSIGP.GT.10) GO TO 210                            OUT01690
01612*               C     PRINT FIRST PAGE OF OUTPUT AND TOTALS FOR 10 OR LESS SIGNIF SOUOUT01700
01613*  104          WRITE (IO,380) (I,I=1,NSIGP)                          OUT01710
01614*  105          WRITE (IO,390)                                        OUT01720
01615*  106          WRITE (IO,380) (MPS(I),I=1,NSIGP)                     OUT01730
01616*  107          WRITE (IO,400)                                        OUT01740
01617*  108          DO 200 K=1,NRECEP                                     OUT01750
01618*  109          WRITE (IO,410) K,STAR(1,K),STAR(2,K),(PSIGS(K,I),I=1,NSIGP) OUT01760
01619*               C     PRINT TOTALS                                    OUT01770
01620*  110          WRITE (IO,420) PSIGS(K,26),PCHI(K)                    OUT01780
01621*  111     200  CONTINUE                                              OUT01790
01622*  112          GO TO 270                                             OUT01800
01623*               C     PRINT FIRST PAGE FOR MORE THAN 10 SIGNIF SOURCES OUT01810
01624*  113     210  WRITE (IO,380) (I,I=1,10)                             OUT01820
01625*  114          WRITE (IO,430) (MPS(I),I=1,10)                        OUT01830
01626*  115          WRITE (IO,400)                                        OUT01840
01627*  116          DO 220 K=1,NRECEP                                     OUT01850
01628*  117     220  WRITE (IO,410) K,STAR(1,K),STAR(2,K),(PSIGS(K,I),I=1,10) OUT01860
01629*  118          IF (NSIGP.GT.20) GO TO 240                            OUT01870
01630*               C     PRINT SECOND PAGE AND TOTALS FOR 11 TO 20 SIGNIF SOURCES OUT01880
01631*  119          WRITE (IO,350) LINE1,LINE2,LINE3                      OUT01890
01632*  120          WRITE (IO,520) NAVG,IPOLU,IDATE,NR                    OUT01900
01633*  121          WRITE (IO,380) (I,I=11,NSIGP)                         OUT01910
01634*  122          WRITE (IO,390)                                        OUT01920
01635*  123          WRITE (IO,380) (MPS(I),I=11,NSIGP)                    OUT01930
01636*  124          WRITE (IO,400)                                        OUT01940
01637*  125          DO 230 K=1,NRECEP                                     OUT01950
01638*  126          WRITE (IO,410) K,STAR(1,K),STAR(2,K),(PSIGS(K,I),I=11,NSIGP) OUT01960
01639*  127     230  WRITE (IO,420) PSIGS(K,26),PCHI(K)                    OUT01970
01640*  128          GO TO 270                                             OUT01980
01641*               C     WRITE SECOND PAGE FOR MORE THAN 20 SIGNIF SOURCES OUT01990
01642*  129     240  WRITE (IO,350) LINE1,LINE2,LINE3                      OUT02000
```

```
01643*          130          WRITE (IO,520) NAVG,IPOLU,IDATE,NR                          OUT02010
01644*          131          WRITE (IO,380) (I,I=11,20)                                  OUT02020
01645*          132          WRITE (IO,430) (MPS(I),I=11,20)                             OUT02030
01646*          133          WRITE (IO,400)                                              OUT02040
01647*          134          DO 250 K=1,NRECEP                                           OUT02050
01648*          135     250  WRITE (IO,410) K,STAR(1,K),STAR(2,K),(PSIGS(K,I),I=11,20)   OUT02060
01649*          136          WRITE (IO,350) LINE1,LINE2,LINE3                            OUT02070
01650*          137          WRITE (IO,520) NAVG,IPOLU,IDATE,NR                          OUT02080
01651*                  C       WRITE LAST PAGE AND TOTALS FOR MORE THAN 20 SIGNIF SOURCES OUT02090
01652*          138          WRITE (IO,380) (I,I=21,NSIGP)                               OUT02100
01653*          139          WRITE (IO,390)                                              OUT02110
01654*          140          WRITE (IO,380) (MPS(I),I=21,NSIGP)                          OUT02120
01655*          141          WRITE (IO,400)                                              OUT02130
01656*          142          DO 260 K=1,NRECEP                                           OUT02140
01657*          143          WRITE (IO,410) K,STAR(1,K),STAR(2,K),(PSIGS(K,I),I=21,NSIGP) OUT02150
01658*          144     260  WRITE (IO,420) PSIGS(K,26),PCHI(K)                          OUT02160
01659*                  C                                                                OUT02170
01660*                  C->->->->SECTION OUTHR.L - WRITE AVERAGING-TIME SUMMARY.          OUT02180
01661*                  C                                                                OUT02190
01662*                  C       OPTION(18): SKIP OUTPUT OF THE AVERAGED SUMMARIES.       OUT02200
01663*          145     270  IF (IOPT(18).EQ.1) GO TO 310                                OUT02210
01664*          146          WRITE (IO,350) LINE1,LINE2,LINE3                            OUT02220
01665*          147          WRITE (IO,530) NAVG,IPOLU,IDATE,NR                          OUT02230
01666*          148          WRITE (IO,500)                                              OUT02240
01667*                  C       CALCULATE GRAND TOTALS AND RANK CONCENTRATIONS           OUT02250
01668*          149          DO 290 I=1,NRECEP                                           OUT02260
01669*          150          CMAX=-1.0                                                   OUT02270
01670*          151          DO 280 K=1,NRECEP                                           OUT02280
01671*          152          IF (HSAV(K).LE.CMAX) GO TO 280                              OUT02290
01672*          153          CMAX=HSAV(K)                                                OUT02300
01673*          154          LMAX=K                                                      OUT02310
01674*          155     280  CONTINUE                                                    OUT02320
01675*          156          IRANK(LMAX)=I                                               OUT02330
01676*          157          HSAV(LMAX)=-1.0                                             OUT02340
01677*          158     290  CONTINUE                                                    OUT02350
01678*          159          DO 300 K=1,NRECEP                                           OUT02360
01679*          160          WRITE (IO,510) K,STAR(1,K),STAR(2,K),(PNAME(J,K),J=1,2),RREC(K),SROUT02370
01680*                      1EC(K),ZR(K),ELR(K),PSIGS(K,26),PCHI(K),IRANK(K)             OUT02380
01681*          161     300  CONTINUE                                                    OUT02390
01682*          162     310  IF (IOPT(24).EQ.0) GO TO 330                                OUT02400
01683*                  C       PUNCH CONCENTRATIONS FOR CONTOURING(MICROGRAMS/CUBIC METER) OUT02410
01684*                  C       RECEPTOR COORDINATES IN USER UNITS.                      OUT02420
01685*          163          DO 320 K=1,NRECEP                                           OUT02430
01686*          164          GWU=PCHI(K)*1.0E+06                                         OUT02440
01687*          165          WRITE (IO,580) RREC(K),SREC(K),GWU,K,ZR(K),ELR(K)           OUT02450
01688*          166          WRITE (1,580) RREC(K),SREC(K),GWU,K,ZR(K),ELR(K)            OUT02460
01689*          167     320  CONTINUE                                                    OUT02470
01690*          168     330  IF (IOPT(23).EQ.0) GO TO 340                                OUT02480
01691*                  C       WRITE PERIODIC CONC. TO DISK/TAPE - FOR LONG-TERM APPLICATION OUT02490
01692*                  C       FOR EACH RUN, THIS WRITE STATEMENT WILL GENERATE         OUT02500
```

```
01693*                C        'NPER' RECORDS.                                          OUT02510
01694*        169           WRITE (13) IDATE(2),NB,(PCHI(K),K=1,NRECEP)                 OUT02520
01695*        170     340   RETURN                                                      OUT02530
01696*                C                                                                 OUT02540
01697*                C->->->->SECTION OUTHR.M - FORMATS.                               OUT02550
01698*                C                                                                 OUT02560
01699*                C***  SECTIONS OF SUBROUTINE OUTHR.                               OUT02570
01700*                C          SECTION OUTHR.A -  COMMON, DIMENSION, AND DATA.        OUT02580
01701*                C          SECTION OUTHR.B -  WRITE HOURLY CONTRIBUTION TITLE.    OUT02590
01702*                C          SECTION OUTHR.C -  WRITE HOURLY MET. DATA.             OUT02600
01703*                C          SECTION OUTHR.D -  WRITE FINAL PLUME HEIGHT AND DISTANCE TO  OUT02610
01704*                C                              FINAL RISE.                         OUT02620
01705*                C          SECTION OUTHR.E -  WRITE HOURLY SIGNIFICANT SOURCE CONTRIB.  OUT02630
01706*                C          SECTION OUTHR.F -  WRITE HOURLY SUMMARY TITLE.         OUT02640
01707*                C          SECTION OUTHR.G -  WRITE HOURLY MET. DATA.             OUT02650
01708*                C          SECTION OUTHR.H -  WRITE FINAL PLUME HEIGHT AND DISTANCE TO  OUT02660
01709*                C                              FINAL RISE.                         OUT02670
01710*                C          SECTION OUTHR.I -  WRITE HOURLY SUMMARY TABLE.         OUT02680
01711*                C          SECTION OUTHR.J -  ENTRY POINT FOR AVERAGING TIME.     OUT02690
01712*                C          SECTION OUTHR.K -  WRITE AVERAGING-TIME SIGNIFICANT SOURCE  OUT02700
01713*                C                              CONTRIBUTIONS.                      OUT02710
01714*                C          SECTION OUTHR.L -  WRITE AVERAGING-TIME SUMMARY.       OUT02720
01715*                C          SECTION OUTHR.M -  FORMATS.                            OUT02730
01716*                C                                                                 OUT02740
01717*        171     350   FORMAT ('1',20A4/1X,20A4/1X,20A4)                           OUT02750
01718*        172     360   FORMAT('0',T30,A4,' CONTRIBUTION(MICROGRAMS/M**3) FROM SIGNIFICANTOUT02760
01719*                      1 POINT SOURCES ',5X,I2,'/',I4,' : HOUR ',I2//)             OUT02770
01720*        173     370   FORMAT (1H0,T5,'RANK')                                      OUT02780
01721*        174     380   FORMAT ('+',T12,10(I3,7X))                                  OUT02790
01722*        175     390   FORMAT ('+',T113,'TOTAL      TOTAL'/1X,T113,'SIGNIF    ALL POINT'/1OUT02800
01723*                      1X,T113,'POINT      SOURCES'/1X,'SOURCE #')                 OUT02810
01724*        176     400   FORMAT (1X,'RECEP #')                                       OUT02820
01725*        177     410   FORMAT (1X,I3,2A1,6P1 0F10.3)                               OUT02830
01726*        178     420   FORMAT ('+',T109,6P2F10.3)                                  OUT02840
01727*        179     430   FORMAT (1X,'SOURCE #',T12,10(I3,7X))                        OUT02850
01728*        180     440   FORMAT('0',T25,A4,' SUMMARY CONCENTRATION TABLE(MICROGRAMS/M**3) 'OUT02860
01729*                      T5X,I2,'/',I4,' : HOUR ',I2/1X)                             OUT02870
01730*        181     450   FORMAT (1X,T2,'HOUR    THETA     SPEED    MIXING    TEMP    STABILITY'/OUT02880
01731*                      11X,T9,'(DEG)     (M/S) HEIGHT(M)    (K)      CLASS'/1X)    OUT02890
01732*        182     460   FORMAT (1X,T2,I2,4F9.2,6X,I1//)                             OUT02900
01733*        183     470   FORMAT (13X,10I11)                                          OUT02910
01734*        184     480   FORMAT (' FINAL HT (M) ',10F11.2)                           OUT02920
01735*        185     490   FORMAT (' DIST FIN HT (KM)',10F11.3)                        OUT02930
01736*        186     500   FORMAT ('0',T7,'RECEPTOR',T28,'EAST',T33,'NORTH',T43,'RECEPTOR HT'OUT02940
01737*                      1,T61,'RECEPTOR',T78,'TOTAL FROM',T93,'TOTAL FROM',T106,'CONCENTRATOUT02950
01738*                      'ION'/' ',T7,'NO. NAME',T22,'COORD',T33,'COORD',T44,'ABV GRD (M)',TOUT02960
01739*                      35,'GRD-LVL ELEV',T77,'SIGNIF POINT',T93,'ALL SOURCES',T111,'RANK'OUT02970
01740*                      4/' ',T58,'(USER HT UNITS)',T80,'SOURCES'//)                OUT02980
01741*        187     510   FORMAT (1H ,I8,2A1,2X,2A4,2F10.2,F12.1,6P2F15.4,I15)       OUT02990
01742*        188     520   FORMAT ('0',T29,I2,'-HOUR AVERAGE ',A4,' CONTRIBUTION(MICROGRAMS/MOUT03000
```

```
01743*                    1**3) FROM SIGNIFICANT POINT SOURCES',5X,I2,'/',I3,'  START HOUR: 'OUT03010
01744*                    2,I2//1X,T5,'RANK')                                                 OUT03020
01745*          189   530  FORMAT ('0',T25,I2,'-HOUR AVERAGE ',A4,' SUMMARY CONCENTRATION TABOUT03030
01746*                    1LE(MICROGRAMS/M**3)',5X,I2,'/',I3,'  START HOUR: ',I2//1X)         OUT03040
01747*          190   540  FORMAT ('CNTL',1X,3F10.3,20X,I4,2F10.1)                            OUT03050
01748*                C
01749*          191        END                                                                 OUT03070
```

SUBROUTINE OUTHR

SYMBOL		REFERENCES									
10	-	12	15*								
20	-	15	19*								
30	-	25	28*								
40	-	19	30*								
50	-	34	35*								
60	-	44	46*								
70	-	36	48*								
80	-	54	55*								
90	-	63	65*								
100	-	9	29	47	66*						
110	-	69	72*								
120	-	72	76*								
130	-	77	78*								
140	-	81	82	85*							
150	-	79	88*								
160	-	89	91*								
170	-	66	92*								
180	-	97	98*								
190	-	94	99*								
200	-	108	111*								
210	-	103	113*								
220	-	116	117*								
230	-	125	127*								
240	-	118	129*								
250	-	134	135*								
260	-	142	144*								
270	-	100	112	128	145*						
280	-	151	152	155*							
290	-	149	158*								
300	-	1 9	161*								
310	-	145	162*								
320	-	163	167*								
330	-	162	168*								
340	-	168	170*								
350	-	10WR	37WR	48WR	56 WR	67WR	101WR	119 WR	129WR	136WR	146WR
		171*									
360	-	11WR	38WR	49WR	57WR	172*					
370	-	20WR	30WR	39WR	50 WR	58WR	173*				
380	-	21WR	23WR	31WR	40 WR	42WR	51WR	59 WR	61WR	104WR	106WR
		113WR	121WR	123WR	131WR	138WR	140WR	174*			
390	-	22WR	41WR	60WR	105 WR	122WR	139WR	175*			
400	-	24WR	33WR	43WR	53 WR	62WR	107WR	115WR	124WR	133WR	141WR
		176*									
410	-	26WR	35WR	45WR	55 WR	64 WR	109WR	117WR	126WR	135WR	143WR
		177*									
420	-	27WR	46WR	65WR	110 WR	127WR	144WR	178*			
430	-	32WR	52WR	114WR	132 WR	179*					
440	-	68WR	180*								

450	-	13WR	70WR	181*							
460	-	14WR	71WR	182*							
470	-	16WR	73WR	183*							
480	-	17WR	74WR	184*							
490	-	18WR	75WR	185*							
500	-	76WR	189WR	186*							
510	-	90WR	160WR	187*							
520	-	102WR	120WR	130WR	137WR	188*					
530	-	147WR	189*								
540	-	165WR	166WR	190*							
CMAX	-	80=	82	83=	150=	152	153=				
DSAV	-	3C0	18WR	75WR							
FLR	-	3C0	90WR	160WR	165WR	166WR					
GWH	-	164=	165WR	166WR							
HSAV	-	3C0	17WR	74WR	79=	82	83	87=	96=	152	153
		157=									
I	-	16WR	16WR	17WR	17WR	18WR	18WR	21WR	21WR	23WR	23WR
		26WR	26WR	31WR	31WR	32WR	32WR	35WR	35WR	40WR	40WR
		42WR	42WR	45WR	45WR	51WR	51WR	52WR	52WR	55WR	55WR
		59WR	59WR	61WR	61WR	64WR	64WR	73WR	73WR	74WR	74WR
		75WR	75WR	79	86	97	98	98	104WR	104WR	106WR
		106WR	109WR	109WR	113WR	113WR	114WR	114WR	117WR	117WR	121WR
		121WR	123WR	123WR	126WR	126WR	131WR	131WR	132WR	132WR	135WR
		135WR	138WR	138WR	140WR	140WR	143WR	143WR	149	156	
IDATE	-	3C0	11WR	38WR	49WR	57WR	68WR	102WR	120WR	130WR	137WR
		147WR	169WR								
IKST	-	4C0	18WR	71WR							
IO	-	4C0	10WR	11WR	13WR	14WR	16WR	17WR	18WR	20WR	21WR
		22WR	23WR	24WR	26WR	27WR	30WR	31WR	32WR	33WR	35WR
		37WR	38WR	39WR	40WR	41WR	42WR	43WR	45WR	46WR	48WR
		49WR	50WR	51WR	52WR	53WR	55WR	56WR	57WR	58WR	59WR
		60WR	61WR	62WR	64WR	65WR	67WR	68WR	70WR	71WR	73WR
		74WR	75WR	76WR	90WR	101WR	102WR	104WR	105WR	106WR	107WR
		109WR	110WR	113WR	114WR	115WR	117WR	119WR	120WR	121WR	122WR
		123WR	124WR	126WR	127WR	129WR	130WR	131WR	132WR	133WR	135WR
		136WR	137WR	138WR	139WR	140WR	141WR	143WR	144WR	146WR	147WR
		148WR	160WR	165WR							
IOPT	-	2C0	9	12	15	66	69	72	100	145	162
		168									
IPOL	-	3C0	8								
IPOLT	-	5DI	6DA	7	8						
IPOLU	-	7=	8=	11WR	38WR	49WR	57WR	68WR	102WR	120WR	130WR
		137WR	147WR								
IRANV	-	4C0	86=	90WR	156=	160WR					
J	-	90WR	90WR	160WR	160WR						
K	-	25	26WR	26WR	26WR	26WR	27WR	27WR	34	35WR	35WR
		35WR	35WR	44	45WR	45WR	45WR	45WR	46WR	46WR	54
		55WR	55WR	55WR	55WR	63	64WR	64WR	64WR	64WR	65WR
		65WR	77	78	79	81	82	83	84	89	90WR
		90WR	90WR	90WR	90WR	90WR	90WR	90WR	90WR	90WR	90WR

SUBROUTINE OUTHR

		94	95	95	96	96	98	98	108	109WR	109WR
		109WR	109WR	110WR	110WR	116	117WR	117WR	117WR	117WR	125
		126WR	126WR	126WR	126WR	127WR	127WR	134	135WR	135WR	135WR
		135WR	142	143WR	143WR	143WR	143WR	144WR	144WR	151	152
		153	154	159	160WR	160WR	160WR	160WR	160WR	160WR	160WR
		160WR	160WR	160WR	160WR	163	164	165WR	165WR	165WR	165WR
		165WR	166WR	166WR	166WR	166WR	166WR	169WR	169WR		
LH	-	3C0	11WR	14WR	14WR	14WR	14WR	14WR	14WR	38WR	49WR
		57WR	68WR	71WR	71WR	71WR	71WR	71WR	71WR		
LINE1	-	4C0	10WR	37WR	48WR	56WR	67WR	101WR	119WR	129WR	136WR
		146WR									
LINE2	-	4C0	10WR	37WR	48WR	56WR	67WR	101WR	119WR	129WR	136WR
		146WR									
LINE3	-	4C0	10WR	37WR	48WR	56WR	67WR	101WR	119WR	129WR	136WR
		146WR									
LMAX	-	84=	86	87	154=	156	157				
MO	-	4C0									
MPO	-	3C0									
MPOP	-	2C0									
MPS	-	4C0	23WR	32WR	42WR	52WR	61WR	106WR	114WR	123WR	132WR
		140WR									
NAVG	-	3C0	95	98	102WR	120WR	130WR	137WR	147WR		
NB	-	3C0	102WR	120WR	130WR	137WR	147WR	169WR			
NPT	-	3C0	17WR	18WR	74WR	75WR					
NRECEP	-	3C0	25	34	44	54	63	77	79	81	89
		94	108	116	125	134	142	149	151	159	163
		169WR									
NSIGP	-	4C0	19	21WR	23WR	26WR	36	40WR	42WR	45WR	59WR
		61WR	64WR	103	104WR	106WR	109WR	118	121WR	123WR	126WR
		138WR	140WR	143WR							
OUTAVG	-	93EY									
OUTHR	-	1FY									
PCHI	-	3C0	95=	95	96	110WR	127WR	144WR	160WR	164	169WR
PHCHI	-	3C0	27WR	46WR	65WR	78	90WR				
PHSIGS	-	3C0	26WR	27WR	35WR	45WR	46WR	55WR	64WR	65WR	90WR
PSIGS	-	3C0	98=	98	109WR	110WR	117WR	126WR	127WR	135WR	143WR
		144WR	160WR								
QHL	-	4C0	14WR	71WR							
QTEMP	-	4C0	14WR	71WR							
QTHETA	-	4C0	14WR	71WR							
QU	-	4C0	14WR	71WR							
RNAME	-	4C0	90WR	160WR							
RREC	-	3C0	90WR	160WR	165WR	166WR					
SREC	-	3C0	90WR	160WR	165WR	166WR					
STAR	-	4C0	26WR	26WR	35WR	35WR	45WR	45WR	55WR	55WR	64WR
		64WR	90WR	90WR	109WR	109WR	117WR	117WR	126WR	126WR	135WR
		135WR	143WR	143WR	160WR	160WR					
TP	-	3C0	90WR	160WR	165WR	166WR					

-+-+-+

********** SUPER INDEX **********

SYMBOL - ========== ROUTINES IN WHICH THE SYMBOL IS USED ==========

A	-	MAIN P	
A1	-	RCP	
A2	-	RCP	
A3	-	RCP	
A4	-	RCP	
A5	-	RCP	
A6	-	RCP	
A7	-	RCP	
AA	-	PGYZ	
AB	-	PGYZ	
AD	-	PGYZ	
AE	-	PGYZ	
AF	-	PGYZ	
ALOG	-	PGYZ	
AN	-	RCP	
ANAME	-	MAIN P	
ANGARC	-	ANGARC	MAIN P
ATAN	-	ANGARC	
ATIME	-	MAIN P	
B	-	MAIN P	
BA	-	PGYZ	
BB	-	PGYZ	
BD	-	PGYZ	
BE	-	PGYZ	
BF	-	PGYZ	
BLNK	-	MAIN P	
BUOY	-	PTR	
C1	-	RCP	
C2	-	RCP	
C3	-	RCP	
C4	-	RCP	
C5	-	RCP	
C6	-	RCP	
C7	-	RCP	
C8	-	RCP	
C9	-	RCP	
CA	-	RCP	
CB	-	RCP	
CC	-	RCP	
CD	-	RCP	
CE	-	RCP	
CELM	-	MAIN P	PTR
CENTX	-	MAIN P	
CENTY	-	MAIN P	
CF	-	RCP	
CMAX	-	OUTHR	
CONC	-	MAIN P	RANK
CONONE	-	MAIN P	

********** SUPER INDEX **********

CONTER	-	MAIN P		
CONTWO	-	MAIN P	PTR	
COS	-	MAIN P	PGYZ	
COSRAD	-	MAIN P		
COST	-	MAIN P	PTR	
CTER	-	MAIN P	PTR	
D	-	MAIN P	PTR	
DAY	-	MAIN P		
DAY1	-	MAIN P		
DAY1A	-	MAIN P		
DAY2	-	MAIN P		
DELH	-	PTR	RCP	
DELM	-	ANGARC	MAIN P	
DELN	-	ANGARC	MAIN P	
DELT	-	PTR		
DH	-	PTR		
DHA	-	PTR		
DISTF	-	PTR		
DSAV	-	MAIN P	OUTHR	PTR
DTHOZ	-	PTR		
DTMB	-	PTR		
DUM	-	MAIN P	PTR	RCP
DUMR	-	MAIN P		
ELHN	-	MAIN P	PTR	
ELOW	-	MAIN P		
ELP	-	MAIN P	PTR	
ELR	-	MAIN P	OUTHR	PTR
ELROUM	-	MAIN P		
ENOP	-	MAIN P		
ENDR	-	MAIN P		
EP	-	PTR		
ER	-	PTR		
EXP	-	PTR	RCP	
F	-	MAIN P	PTR	
FLOAT	-	MAIN P		
FP	-	PTR		
GWU	-	OUTHR		
H	-	PTR	RCP	
HAFL	-	MAIN P		
HANE	-	MAIN P	PTR	
HC	-	MAIN P		
HC1	-	BLOAT	MAIN P	
HF	-	MAIN P		
HI1	-	MAIN P		
HI2	-	MAIN P		
HIMAX	-	MAIN P		
HL	-	MAIN P	PTR	RCP
HLH	-	MAIN P		
HMAXA	-	MAIN P	RANK	
HPR	-	PTR		

********** SUPER INDEX **********

```
HPRM    -  PTR
HR1     -  MAIN P
HR2     -  MAIN P
HSAV    -  MAIN P    OUTHR     PTR
I       -  MAIN P    OUTHR
IO      -  MAIN P    PGYZ
IDATE   -  MAIN P    OUTHR     PTR
IDATP   -  MAIN P
IDAY    -  MAIN P
IDAYS   -  MAIN P
IDCK    -  MAIN P
IDM     -  MAIN P
IDUM    -  MAIN P
IFREQ   -  MAIN P
IH      -  MAIN P
IH1     -  MAIN P
IH2     -  MAIN P
IHR     -  MAIN P    RANK
IHSTRT  -  MAIN P
IJ      -  RANK
IJP1    -  RANK
IKST    -  MAIN P    OUTHR
ILH     -  MAIN P
IM1     -  MAIN P
IMO     -  MAIN P
IMPS    -  MAIN P
IMXD    -  MAIN P
IMXYR   -  MAIN P
IN      -  MAIN P
INPT    -  MAIN P
IO      -  MAIN P    OUTHR     RANK      RCP
IOPT    -  MAIN P    OUTHR     PTR       RCP
IP      -  MAIN P
IP1     -  MAIN P
IPOL    -  MAIN P    OUTHR     PTR
IPOLT   -  OUTHR
IPOLU   -  OUTHR
IPSIGS  -  MAIN P    PTR
IQ      -  MAIN P
IRANK   -  OUTHR
IS      -  MAIN P
ISECD   -  MAIN P
ISECYR  -  MAIN P
ISKIP   -  MAIN P
ISTDAY  -  MAIN P
IYEAR   -  MAIN P
IYM     -  MAIN P
J       -  MAIN P    OUTHR     PTR       RANK
JA      -  MAIN P
JDAY    -  MAIN P    RANK
```

********** SUPER INDEX **********

JHR	-	MAIN P			
JYR	-	MAIN P			
K	-	MAIN P	OUTHR	PTR	RANK
K1	-	MAIN P			
K2	-	MAIN P			
KMX	-	MAIN P			
KSIG	-	PTR			
KST	-	MAIN P	PGYZ	PTR	RCP
KSUM	-	MAIN P			
L	-	MAIN P	RANK		
LDRUN	-	MAIN P			
LH	-	MAIN P	OUTHR	PTR	RANK
LINE1	-	MAIN P	OUTHR		
LINE2	-	MAIN P	OUTHR		
LINE3	-	MAIN P	OUTHR		
LMAX	-	MAIN P	OUTHR		
LSMAX	-	MAIN P			
LST	-	MAIN P			
LSTAB	-	MAIN P			
MAXP	-	MAIN P			
MOD	-	MAIN P			
MPS	-	MAIN P	OUTHR		
NAVS	-	MAIN P			
NAVG	-	MAIN P	OUTHR		
NAVT	-	MAIN P			
NB	-	MAIN P	OUTHR		
NDAY	-	MAIN P	RANK		
NE	-	MAIN P			
NHR	-	MAIN P			
NHRS	-	MAIN P			
NP	-	MAIN P			
NP2a	-	MAIN P			
NP3	-	MAIN P			
NPa	-	MAIN P			
NPER	-	MAIN P			
NPT	-	MAIN P	OUTHR	PTR	
NPY	-	MAIN P			
NRECEP	-	MAIN P	OUTHR	PTR	RANK
NSIGP	-	MAIN P	OUTHR		
NTIME	-	MAIN P			
OUTAVG	-	MAIN P			
OUTHR	-	MAIN P			
PARTC	-	PTR			
PCHI	-	MAIN P	OUTHR	PTR	
PERSIS	-	MAIN P			
PGYZ	-	RCP			
PHCHI	-	MAIN P	OUTHR	PTR	
PHSIGS	-	MAIN P	OUTHR	PTR	
PL	-	MAIN P	PTR		
PNAME	-	MAIN P			

********** SUPER INDEX **********

PROD	-	PTR		
PSAV	-	MAIN P	PTR	
PSIGS	-	MAIN P	OUTHR	PTR
PTR	-	MAIN P		
PXUCOF	-	BL DAT	MAIN P	
PXUEXP	-	BL DAT	MAIN P	
QHL	-	MAIN P	OUTHR	
QTEMP	-	MAIN P	OUTHR	
QTHETA	-	MAIN P	OUTHR	
QU	-	MAIN P	OUTHR	
RADIK	-	MAIN P		
RADIL	-	MAIN P		
RANK	-	MAIN P		
RC	-	PTR	RCP	
RCP	-	PTR		
RNAME	-	MAIN P	OUTHR	
RQ	-	PTR		
RREC	-	MAIN P	OUTHR	PTR
S	-	PTR		
SCALE	-	PTR		
SIGMAX	-	MAIN P		
SIN	-	MAIN P	PGYZ	
SINRAD	-	MAIN P		
SINT	-	MAIN P	PTR	
SOURCE	-	MAIN P	PTR	
SQ	-	PTR		
SQRT	-	MAIN P	PTR	RCP
SREC	-	MAIN P	OUTHR	PTR
STAR	-	MAIN P	OUTHR	
STR	-	MAIN P		
SUM	-	MAIN P	RCP	
SY	-	PGYZ	RCP	
SZ	-	PGYZ	RCP	
T	-	PCP		
TABLE	-	MAIN P		
TEMP	-	MAIN P	PTR	RCP
TH	-	PGYZ		
THETA	-	MAIN P		
THL	-	RCP		
THT	-	PTR		
TITLE	-	MAIN P		
TLOS	-	MAIN P	PTR	
TOM	-	MAIN P		
TRAD	-	MAIN P		
TS	-	MAIN P	PTR	
TT	-	PTR		
U	-	MAIN P	PTR	
UPH	-	PTR		
UPL	-	PTR	RCP	
UR	-	MAIN P		

********** SUPER INDEX **********

```
URES    -  MAIN P
VP      -  MAIN P
VS      -  PTR
X       -  PGYZ      PTR      RCP
XA      -  PGYZ
XB      -  PGYZ
XD      -  PGYZ
XDUM    -  PTR
XE      -  PGYZ
XF      -  PGYZ
XY      -  PGYZ
Y       -  PTR       RCP
YD      -  RCP
YDUM    -  PTR
Z       -  PTR       RCP
ZP      -  MAIN P    OUTHR    PTR
********** ********** ********** ********** ********** ********** ********** **********
```

TECHNICAL REPORT DATA
(Please read Instructions on the reverse before completing)

1. REPORT NO EPA-600/8-80-016	2	3. RECIPIENT'S ACCESSION NO.
4. TITLE AND SUBTITLE USER'S GUIDE FOR MPTER A Multiple Point Gaussian Dispersion Algorithm With Optional Terrain Adjustment		5. REPORT DATE April 1980 6. PERFORMING ORGANIZATION CODE
7. AUTHOR(S) Thomas E. Pierce and D. Bruce Turner		8. PERFORMING ORGANIZATION REPORT NO.
9. PERFORMING ORGANIZATION NAME AND ADDRESS (same as block 12)		10. PROGRAM ELEMENT NO. C05A1A 10- 0008 (FY-80) 11. CONTRACT/GRANT NO.
12. SPONSORING AGENCY NAME AND ADDRESS Environmental Sciences Research Laboratory - RTP, NC Office of Research and Development U. S. Environmental Protection Agency Research Triangle Park, NC 27711		13. TYPE OF REPORT AND PERIOD COVERED In-house 14. SPONSORING AGENCY CODE EPA/600/09
15. SUPPLEMENTARY NOTES		

16. ABSTRACT The information presented in this user's guide is directed to air pollution scientists interested in applying air quality simulation models. MPTER is the designation for Multiple Point source algorithm with TERrain adjustments. This algorithm is useful for estimating air quality concentrations of relatively non-reactive pollutants; hourly estimates are made using the Gaussian steady-state model. The algorithm is most applicable for source-receptor distances less than 10 km and for locations with level or rolling terrain where a single wind vector for each hour adequately approximates the flow over the source and receptor sites. The terrain adjustment option is limited in application to receptors whose elevation is no higher than the lowest stack top elevation of the sources considered. Calculations are performed on the hourly meteorological data that the model requires: wind direction, wind speed, temperature, stability class, and mixing height. Emission information required of the point sources are source coordinates, emission rate, physical height stack diameter, stack gas exit velocity, and stack gas temperature. In addition to terrain adjustment, options are available for stack downwash, gradual plume rise, and buoyancy-induced dispersion. All printed output is optionally available so the user can avoid unneeded output volume. General information is contained in the Executive Summary and the first three chapters. The technical basis for the algorithm is given in Chapter 4 and Appendices A and B. The remaining material herein relates to use and understanding of the computer program for the algorithm.

17. KEY WORDS AND DOCUMENT ANALYSIS

a. DESCRIPTORS	b. IDENTIFIERS/OPEN ENDED TERMS	c. COSATI Field/Group
*Air pollution *Atmospheric models Algorithms *Atmospheric diffusion		13 B 04 A 12 A

18. DISTRIBUTION STATEMENT RELEASE TO PUBLIC	19. SECURITY CLASS *(This Report)* UNCLASSIFIED 20. SECURITY CLASS *(This page)* UNCLASSIFIED	21. NO. OF PAGES 247 22. PRICE

EPA Form 2220-1 (9-73)

Date_____

Chief, Environmental Operations Branch

Meteorology and Assessment Division (MD-80)

U.S. Environmental Protection Agency

RESRCH TRI PK, NC 27711

I would like to receive future revisions to the *User's Guide for MPTER*.

Name_____

Organization _____

_____

Address_____

City_____ State_____Zip_____

Phone (Optional) (_____) _____ - _____

Agency

Information
Cincinnati OH 45268

Postage and
Fees Paid
Environmental
Protection
Agency
EPA-335

Official Business
Penalty for Private Use, $300

Please make all necessary changes on the above label, detach or copy and return to the address in the upper left hand corner

If you do not wish to receive these reports CHECK HERE ☐ detach or copy this cover and return to the address in the upper left hand corner

EPA-600/8-80-016