United States
Environmental Protection
Agency

Atmospheric Research and
Exposure Assessment Laboratory
Research Triangle Park NC 27711

EPA/600/4-89/018
June 1988

Research and Development

EPA

Second Supplement to Compendium of Methods for the Determination of Toxic Organic Compounds in Ambient Air

EPA/600/4-89/018
June 1988

Second Supplement to Compendium of Methods for the Determination of Toxic Organic Compounds in Ambient Air

by

William T. Winberry, Jr. and Norma T. Murphy
Engineering-Science
One Harrison Park, Suite 200
401 Harrison Oaks Boulevard
Cary, NC 27513

and

R. M. Riggan
Battelle-Columbus Laboratories
505 King Avenue
Columbus, OH 43201

Contract No. 68-02-3996 (WA 2/020)
and
Contract No. 68-02-3888 (WA44)

EPA Project Managers: FrankF. McElroy and Larry J. Purdue
Quality Assurance Division
Atmospheric Research and Exposure Assessment Laboratory
U.S. Environmental Protection Agency
Research Triangle Park, NC 27711

Atmospheric Research and Exposure Assessment Laboratory
Office of Research and Development
U.S. Environmental Protection Agency
Research Triangle Park, NC 27711

Disclaimer

The information in this document has been funded wholly or in part by the U. S. Environmental Protection Agency under contract numbers 68-02-3745, 68-02-3996, and 68-02-3888. It has been subjected to the Agency's peer and administrative review, and it has been approved for publication as an EPA document. Mention of trade names or commercial products does not constitute endorsement or recommendation for use.

SECOND SUPPLEMENT TO COMPENDIUM OF METHODS FOR THE

DETERMINATION OF TOXIC ORGANIC COMPOUNDS IN AMBIENT AIR

N O T I C E

To holders of Compendium of Methods for the Determination of Toxic Organic Compounds in Ambient Air (EPA-600/4-84-041), dated April 1984, and its Supplement (EPA/600/4-87-006), dated September 1986:

The accompanying document is another supplement to the Compendium and contains the pages necessary to update the Compendium as of June, 1988. The supplement contains only the new or updated material and is intended to be used in conjunction with the original Compendium and Supplement published by the U.S. Environmental Protection Agency, Environmental Monitoring Systems Laboratory, Quality Assurance Division. Copies of these previous documents may be obtained, as supplies permit, from:

U. S. Environmental Protection Agency
Center for Environmental Research Information
Compendium Registration
26 W. Martin Luther King Drive
Cincinnati, Ohio 45268
Attention: Distribution Record System

Included in this supplement are all revisions and additions pertinent to the update, along with instructions for merging the supplementary pages with the original Compendium and previous Supplement to form a fully integrated and updated document. Five new methods are added to the Compendium, and a new title page, Table of Contents, and new Tables 1 and 2 are included to reflect the added methods. Also, an update to page 1 of Method TO-9 (first Supplement, EPA-600/4-84-041) is provided.

Any questions, comments, or suggestions regarding this supplement or the Compendium should be directed to the U. S. Environmental Protection Agency, Environmental Monitoring Systems Laboratory, Quality Assurance Division, MD-77, Research Triangle Park, NC, 27711; (919) 541-2665, (FTS: 629-2665).

Instructions for Merging the Second Supplement into the Compendium:

Delete	Insert
Previous Title Page	New Title Page (6/88)
Previous Disclaimer, page ii	New Disclaimer, page ii (6/88)
Previous CONTENTS, page iii	New CONTENTS, page iii (6/88)
Previous FOREWORD, page iv	New FOREWORD, page iv (6/88)
Previous INTRODUCTION, page v	New INTRODUCTION, page v (6/88)
Previous TABLE 1, page vi	New TABLE 1, page vi-vii (6/88)
Previous TABLE 2, pages vii-viii	New TABLE 2, pages viii-x (6/88)
Previous Page T09-1 (Method T09)	New Page T09-1 (Method T09, 6/88)
-	Method T010 (6/88)
-	Method T011 (6/88)
-	Method T012 (6/88)
-	Method T013 (6/88)
-	Method T014 (6/88)

CONTENTS

Page

INTRODUCTION v

TABLE 1. Brief Method Description and Applicability vi

TABLE 2. Method Applicability to Compounds of Primary Interest viii

METHODS:

T01 Determination of Volatile Organic Compounds in Ambient Air Using Tenax® Adsorption and Gas Chromatograph (GC/MS) T01-1
T02 Determination of Volatile Organic Compounds in Ambient Air by Carbon Molecular Sieve Adsorption and Gas Chromatography/ Mass Spectrometry (GC/MS) T02-1
T03 Determination of Volatile Organic Compounds in Ambient Air Using Cryogenic Preconcentration Techniques and Gas Chromatography with Flame Ionization and Electron Capture Detection T03-1
T04 Determination of Organochlorine Pesticides and Polychlorinated Biphenyls in Ambient Air T04-1
T05 Determination of Aldehydes and Ketones in Ambient Air Using High Performance Liquid Chromatography (HPLC). T05-1
APPENDIX A - EPA Method 608
T06 Determination of Phosgene in Ambient Air Using High Performance Liquid Chromatography (HPLC). T06-1
T07 Determination of N-Nitrosodimethylamine in Ambient Air Using Gas Chromatography T07-1
T08 Determination of Phenol and Methylphenols (Cresols) in Ambient Air Using High Performance Liquid Chromatography (HPLC) T08-1
T09 Determination of Polychlorinated Dibenzo-p-Dioxins (PCDDs) in Ambient Air Using High-Resolution Gas Chromatography/High-Resolution Mass Spectrometry T09-1
T010 Determination of Organochlorine Pesticides in Ambient Air Using Low Volume Polyurethane Foam (PUF) Sampling with Gas Chromatography/Electron Capture Detector (GC/ECD) T010-1
T011 Determination of formaldehyde in Ambient Air Using Adsorbent Cartridge Followed By High Performance Liquid Chromatography (HPLC) T011-1
T012 Determination of Non-methane Organic Compounds (NMOC) in Ambient Air Using Cryogenic Preconcentration and Direct Flame Ionization Detection (PDFID). T012-1
T013 Determination of Polynuclear Aromatic Hydrocarbons (PAHs) in Ambient Air Using High Volume Sampling with Gas Chromatography/Mass Spectrometry (GC/MS) and High Resolution Liquid Chromatography Analysis T013-1
T014 Determination of Volatile Organic Compounds (VOCs) in Ambient Air Using SUMMA® Polished Canister Sampling and Gas Chromatographic (GC) Analysis T014-1

FOREWORD

Measurement and monitoring research efforts are designed to anticipate potential environmental problems, to support regulatory actions by developing an in-depth understanding of the nature and processes that impact health and the ecology, to provide innovative means of monitoring compliance with regulations, and to evaluate the effectiveness of health and environmental protection efforts through the monitoring of long-term trends. The Environmental Monitoring Systems Laboratory, Research Triangle Park, North Carolina, has responsibility for: assessment of environmental monitoring technology and systems; implementation of Agency-wide quality assurance programs for air pollution measurement systems; and supplying technical support to other groups in the Agency, including the Office of Air and Radiation, the Office of Toxic Substances, and the Office of Enforcement.

Determination of toxic organic compounds in ambient air is a complex task, primarily because of the wide variety of compounds of interest and the lack of standardized sampling and analysis procedures. This methods Compendium has been prepared to provide a standardized format for such analytical procedures. A core set of five methods is presented in the original document. In an effort to update the original Compendium, four specific methods have been developed and published in a supplemental document. In addition to the Compendium and Supplement, five new methods have been prepared for inclusion. With this addition, the Compendium now contains fourteen standardized sampling and analysis procedures. As advancements are made, the current methods may be modified from time to time along with new additions to the Compendium.

Gary J. Foley
Director
Environmental Monitoring Systems Laboratory
Research Triangle Park, North Carolina, 27711

INTRODUCTION

This Compendium has been prepared to provide regional, state, and local environmental regulatory agencies, as well as other interested parties, with specific guidance on the determination of selected toxic organic compounds in ambient air. Recently, a Technical Assistance Document (TAD) was published which provided guidance to such persons (1). Based on the comments received concerning the TAD, the decision was made to begin preparation of a Compendium which would provide specific sampling and analysis procedures, in a standardized format, for selected toxic organic compounds.

The current Compendium consists of fourteen procedures which are considered to be of primary importance in current toxic organic monitoring efforts. Additional methods will be placed in the Compendium from time to time, as such methods become available. The original methods were selected to cover as many compounds as possible (i.e., multiple analyte methods were selected). The additional methods are targeted toward specific compounds, or small groups of compounds which, for various technical reasons, cannot be determined by the more general methods.

Each of the methods writeups is self contained (including pertinent literature citations) and can be used independent of the remaining portions of the Compendium. To the extent possible the American Society for Testing and Materials (ASTM) standardized format has been used, since most potential users are familiar with that format. Each method has been identified with a revision number and date, since modifications to the methods may be required in the future.

Nearly all the methods writeups have some flexibility in the procedure. Consequently, it is the user's responsibility to prepare certain standard operating procedures (SOPs) to be employed in that particular laboratory. Each method indicates those operations for which SOPs are required.

Table 1 summarizes the methods currently in the Compendium. As shown in Table 1 the first three methods are directed toward volatile nonpolar compounds. The user should review the procedures as well as the background material provided in the TAD (1) before deciding which of these methods best meets the requirements of the specific task.

Table 2 presents a partial listing of toxic organic compounds which can be determined using the current set of methods in the Compendium. Additional compounds may be determined by these methods, but the user must carefully evaluate the applicability of the method before use.

---

(1) Riggin, R. M., "Technical Assistance Document for Sampling and Analysis of Toxic Organic Compounds in Ambient Air", EPA-600/4-83-027, U. S. Environmental Protection Agency, Research Triangle Park, North Carolina, 1983.

TABLE 1. BRIEF METHOD DESCRIPTION AND APPLICABILITY

Method Number	Description	Types of Compounds Determined
TO-1	Tenax GC Adsorption and GC/MS Analysis	Volatile, nonpolar organics (e.g., aromatic hydrocarbons, chlorinated hydrocarbons) having boiling points in the range of 80° to 200°C.
TO-2	Carbon Molecular Sieve Adsorption and GC/MS Analysis	Highly volatile, nonpolar organics (e.g., vinyl chloride, vinylidene chloride, benzene, toluene) having boiling points in the range of -15° to +120°C.
TO-3	Cryogenic Trapping and GC/FID or ECD Analysis	Volatile, nonpolar organics having boiling points in the range of -10° to +200°C.
TO-4	High Volume PUF Sampling and GC/ECD Analysis	Organochlorine pesticides and PCBs
TO-5	Dinitrophenylhydrazine Liquid Impinger Sampling and HPLC/UV Analysis	Aldehydes and Ketones
TO-6	High Performance Liquid Chromatography (HPLC)	Phosgene
TO-7	Thermosorb/N Adsorption	N-Nitrosodimethylamine
TO-8	Sodium Hydroxide Liquid Impinger with High Performance Liquid Chromatography	Cresol/Phenol
TO-9	High Volume Polyurethane Foam Sampling with High Resolution Gas Chromatography/High Resolution Mass Spectrometry (HRGC/HRMS)	Dioxin

TABLE 1. BRIEF METHOD DESCRIPTION AND APPLICABILITY (Continued)

Method Number	Description	Types of Compounds Determined
TO-10	Low Volume Polyurethane Foam (PUF) Sampling With Gas Chromatography/Electron Capture Detector (GC/ECD)	Pesticides
TO-11	Adsorbent Cartridge Followed By High Performance Liquid Chromatography (HPLC) Detection	Formaldehyde
TO-12	Cryogenic Preconcentration and Direct Flame Ionization Detection (PDFID)	Non-Methane Organic Compounds (NMOC)
TO-13	PUF/XAD-2 Adsorption with Gas Chromatography (GC) and High Performance Liquid Chromatography (HPLC) Detection	Polynuclear Aromatic Hydrocarbons (PAHs)
TO-14	SUMMA® Passivated Canister Sampling with Gas Chromatography	Semi-Volatile and Volatile Organic Compounds (SVOC/VOCs)

TABLE 2. METHOD APPLICABILITY TO COMPOUNDS OF PRIMARY INTEREST

Compound	Applicable Method(s)	Comments
Acenaphthene	TO-14	
Acenaphthylene	TO-14	
Acetaldehyde	TO-5, TO-11	Extension of TO-11
Acetone	TO-11	Extension of TO-11
Acrolein	TO-5, TO-11	Extension of TO-11
Acrylonitrile	TO-2, TO-3	TO-3 yields better recovery data than TO-2.
Aldrin	TO-10	
Allyl Chloride	TO-2, TO-3	TO-3 yields better recovery data than TO-2.
Aroclor 1242, 1254 and 1260	TO-10	
Benzaldehyde	TO-5	
Benzene	TO-1, TO-2, TO-3, TO-14	TO-14 yields better recovery data.
Benzyl Chloride	TO-1, TO-3, TO-14	
Benzo(a)anthracene	TO-13	
Benzo(a)pyrene	TO-13	
Benzo(b)fluoranthene	TO-13	
Benzo(e)pyrene	TO-13	
Benzo(g,h,i)perylene	TO-13	
Benzo(k)fluoranthene	TO-13	
Butyraldehyde	TO-11	Extension of TO-11
Captan	TO-10	
Carbon Tetrachloride	TO-1, TO-2, TO-3 TO-14	Breakthrough volume is very low using TO-1.
Chlordane	TO-10	
Chlorobenzene	TO-1, TO-3, TO-14	
Chloroform	TO-1, TO-2, TO-3 TO-14	Breakthrough volume is very low using TO-1
Chloroprene (2-Chloro-1,3-butadiene)	TO-1, TO-3	The applicability of these methods for chloroprene has not been documented.
Chlorothalonil	TO-10	
Chlorpyrifos	TO-10	
Chrysene	TO-13	
Cresol	TO-8	
Crotonaldehyde	TO-11	Extension of TO-11
4,4'-DDE	TO-4	
4,4'-DDT	TO-4	
1,2-Dibromomethane	TO-14	
1,2-Dichlorobenzene	TO-14	
1,3-Dichlorobenzene	TO-14	
1,4-Dichlorobenzene	TO-1, TO-3, TO-14	
1,1-Dichloroethane	TO-14	
1,2-Dichloroethylene	TO-14	

TABLE 2. METHOD APPLICABILITY TO COMPOUNDS OF PRIMARY INTEREST (Continued)

Compound	Applicable Method(s)	Comments
1,2-Dichloropropane	TO-14	
1,3-Dichloropropane	TO-14	
Dichlorovos	TO-10	
Dicofol	TO-10	
Dieldrin	TO-10	
2,5-Dimethylbenzaldehyde	TO-11	Extension of TO-11
Dioxin	TO-9	
Endrin	TO-10	
Endrin Aldehyde	TO-10	
Ethyl Benzene	TO-14	
Ethyl Chloride	TO-14	
Ethylene Dichloride	TO-1, TO-2, TO-3	Breakthrough volume very low
(1,2-Dichloroethane)	TO-14	using TO-1.
4-Ethyltoluene	TO-14	
Fluoranthene	TO-13	
Fluorene	TO-13	
Folpet	TO-10	
Formaldehyde	TO-5, TO-11	
Freon 11	TO-14	
Freon 12	TO-14	
Freon 113	TO-14	
Freon 114	TO-14	
Heptachlor	TO-10	
Heptachlor Epoxide	TO-10	
Hexachlorobenzene	TO-10	
and α-Hexachloro-		
cyclohexane	TO-10	
Hexachlorobutadiene	TO-14	
Hexachlorocyclopenta-		
diene	TO-10	
Hexanaldehyde	TO-11	Extension of TO-11
Indeno(1,2,3-cd)pyrene	TO-13	
Isovaleraldehyde	TO-11	Extension of TO-11
Lindane (α-BHC)	TO-10	
Methoxychlor	TO-10	
Methyl Benzene	TO-14	
Methyl Chloride	TO-14	
Methyl Chloroform	TO-1, TO-2, TO-3	Breakthrough volume very low
(1,1,1-Trichloroethane)	TO-14	using TO-1.
Methylene chloride	TO-2, TO-3, TO-14	
Mexacarbate	TO-10	
Mirex	TO-10	
Naphthalene	TO-13	
Nitrobenzene	TO-1, TO-3	
N-Nitrosodimethylamine	TO-7	
trans-Nonachlor	TO-10	

TABLE 2. METHOD APPLICABILITY TO COMPOUNDS OF PRIMARY INTEREST (Continued)

Compound	Applicable Method(s)	Comments
Non-methane Organic Compounds	TO-12	
Oxychlordane	TO-10	
Pentachlorobenzene	TO-10	
Pentachlorphenol	TO-10	
p,p'- DDE	TO-10	
p,p'- DDT	TO-10	
Perchloroethylene (tetrachloroethylene)	TO-1, (TO-2?), TO-3, TO-14	TO-2 performance has not been documented for this compound.
Phenanthrene	TO-13	
Phenol	TO-8	
Phosgene	TO-6	
Polychlorinated biphenyls (PCBs)	TO-4, TO-9	
Propanal	TO-5	
Propionaldehyde	TO-11	Extension of TO-11
Pyrene	TO-13	
Ronnel	TO-10	
1,2,3,4-Tetrachlorobenzene	TO-10	Using PUF in combination with Tenax® GC solid adsorbent.
1,1,2,2-Tetrachloroethane	TO-14	
o-Tolualdehyde	TO-11	Extension of TO-11
m-Tolualdehyde	TO-11	Extension of TO-11
p-Tolualdehyde	TO-11	Extension of TO-11
Toluene	TO-1, TO-2, TO-3, TO-14	
1,2,3-Trichlorobenzene	TO-10, TO-14	Using PUF in combination with Tenax® GC solid adsorbent.
1,2,4-Trichlorobenzene	TO-14	
1,1,2-Trichloroethane	TO-14	
Trichloroethylene	TO-1, TO-2, TO-3, TO-14	
2,4,5-Trichlorophenol	TO-10	
1,2,4-Trimethylbenzene	TO-14	
1,3,5-Trimethylbenzene	TO-14	
Valeraldehyde	TO-11	Extension of TO-11
Vinyl Benzene	TO-14	
Vinyl Chloride	TO-2, TO-3, TO-14	
Vinyl Trichloride	TO-14	
Vinylidine Chloride (1,1-dichloroethene)	TO-2, TO-3, TO-14	
o,m,p-Xylene	TO-1, TO-3, TO-14	

Revision 1.1
June, 1988

METHOD TO9

METHOD FOR THE DETERMINATION OF POLYCHLORINATED DIBENZO-p-DIOXINS (PCDDs) IN AMBIENT AIR USING HIGH-RESOLUTION GAS CHROMATOGRAPHY/HIGH-RESOLUTION MASS SPECTROMETRY (HRGC/HRMS)

1. Scope

1.1 This document describes a method for the determination of polychlorinated dibenzo-p-dioxins (PCDDs) in ambient air. In particular, the following PCDDs have been evaluated in the laboratory utilizing this method:

- 1,2,3,4-tetrachlorodibenzo-p-dioxin (1,2,3,4-TCDD)
- 1,2,3,4,7,8-hexachlorodibenzo-p-dioxin (1,2,3,4,7,8-H_xCDD)
- Octachlorodibenzo-p-dioxin (OCDD)
- 2,3,7,8-Tetrachlorodibenzo-p-dioxin (2,3,7,8-TCDD)

The method consists of sampling ambient air via an inlet filter followed by a cartridge (filled with polyurethane foam) and analysis of the sample using high-resolution gas chromatography/high-resolution mass spectrometry (HRGC/HRMS). Original laboratory studies have indicated that the use of polyurethane foam (PUF) or silica gel in the sampler will give equal efficiencies for retaining PCDD/PCDF isomers; i.e., the median retention efficiencies for the PCDD isomers ranged from 67 to 124 percent with PUF and from 47 to 133 percent with silica gel. Silica gel, however, produced lower levels of background interferences than PUF. The detection limits were, therefore, approximately four times lower for tetrachlorinated isomers and ten times lower for hexachlorinated isomers when using silica gel as the adsorbent. The difference in detection limit was approximately a factor of two for the octachlorinated isomers. However, due to variable recovery and extensive cleanup required with silica gel, the method has been written using PUF as the adsorbent.

1.2 With careful attention to reagent purity and other factors, the method can detect PCDDs in filtered air at levels below 1-5 pg/m^3*.

---

*Lowest levels for which the method has been validated. Up to an order of magnitude better sensitivity should be achievable with 24-hour air samples.

METHOD TO10

METHOD FOR THE DETERMINATION OF ORGANOCHLORINE PESTICIDES IN AMBIENT AIR USING LOW VOLUME POLYURETHANE FOAM (PUF) SAMPLING WITH GAS CHROMATOGRAPHY/ELECTRON CAPTURE DETECTOR (GC/ECD)

1. Scope

1.1 This document describes a method for sampling and analysis of a variety of organochlorine pesticides in ambient air. The procedure is based on the adsorption of chemicals from ambient air on polyurethane foam (PUF) using a low volume sampler.

1.2 The low volume PUF sampling procedure is applicable to multicomponent atmospheres containing organochlorine pesticide concentrations from 0.01 to 50 ug/m^3 over 4- to 24-hour sampling periods. The detection limit will depend on the nature of the analyte and the length of the sampling period.

1.3 Specific compounds for which the method has been employed are listed in Table 1. The analysis methodology described in this document is currently employed by laboratories using EPA Method 608. The sampling methodology has been formulated to meet the needs of pesticide sampling in ambient air.

2. Applicable Documents

2.1 ASTM Standards

D1356 - Definitions of Terms Related to Atmospheric Sampling and Analysis.

D1605-60 - Standard Recommended Practices for Sampling Atmospheres for Analysis of Gases and Vapors.

E260 - Recommended Practice for General Gas Chromatography Procedures.

E355 - Practice for Gas Chromatography Terms and Relationships.

2.2 EPA Documents

2.2.1 Compendium of Methods for the Determination of Toxic Organic Compounds in Ambient Air, EPA-600/4-84-041, U.S. Environmental Protection Agency, Research Triangle Park, NC, April 1984.

2.2.2 Manual of Analytical Methods for Determination of Pesticides in Humans and Environmental Standards, EPA-600/8-80-038, U.S. Environmental Protection Agency, Research Triangle Park, NC, July 1982.

2.2.3 "Test Method 608, Organochlorine Pesticides and PCBs," in EPA-600/4-82-057, U. S. Environmental Protection Agency, Cincinnati, Ohio, July 1982.

2.2.4 R. G. Lewis, ASTM draft report on standard practice for sampling and analysis pesticides and polychlorinated biphenyls in indoor atmospheres, U. S. Environmental Protection Agency, Research Triangle Park, NC, June 1987.

3. Summary of Method

3.1 A low volume (1 to 5 L/minute) sampler is used to collect vapors on a sorbent cartridge containing PUF. Airborne particles may also be collected, but the sampling efficiency is not known.

3.2 Pesticides are extracted from the sorbent cartridge with 5% diethyl ether in hexane and determined by gas-liquid chromatography coupled with an electron capture detector (ECD). For some organochlorine pesticides, high performance liquid chromatography (HPLC) coupled with an ultraviolet (UV) detector or electrochemical detector may be preferable. This method describes the use of an electron capture detector.

3.3 Interferences resulting from analytes having similar retention times during gas-liquid chromatography are resolved by improving the resolution or separation, such as by changing the chromatographic column or operating parameters, or by fractionating the sample by column chromatography.

3.4 Sampling procedure is also applicable to other pesticides which may be determined by gas-liquid chromatography coupled with a nitrogen-phosphorus detector (NPD), flame photometric detector (FPD), Hall electrolytic conductivity detector (HECD), or a mass spectrometer (MS).

4. Significance

4.1 Pesticide usage and environmental distribution are common to rural and urban areas of the United States. The application of pesticides can cause adverse health effects to humans by contaminating soil, water, air, plants, and animal life.

4.2 Many pesticides exhibit bioaccumulative, chronic health effects; therefore, monitoring the presence of these compounds in ambient air is of great importance.

4.3 Use of a portable, low volume PUF sampling system allows the user flexibility in locating the apparatus. The user can place the apparatus in a stationary or mobile location. The portable sampling apparatus may be positioned in a vertical or horizontal stationary location (if necessary, accompanied with supporting structure). Mobile positioning of the system can be accomplished by attaching the apparatus to a person to test air in the individual's breathing zone. Moreover, the PUF cartridge used in this method provides for successful collection of most pesticides.

5. Definitions

Definitions used in this document and in any user-prepared Standard Operating Procedures (SOPs) should be consistent with ASTM D1356, D1605-60, E260, and E355. All abbreviations and symbols are defined within this document at point of use.

5.1 Sampling efficiency (SE) - ability of the sampling medium to trap vapors of interest. %SE is the percentage of the analyte of interest collected and retained by the sampling medium when it is introduced as a vapor in air or nitrogen into the air sampler and the sampler is operated under normal conditions for a period of time equal to or greater than that required for the intended use.

5.2 Retention efficiency (RE) - ability of sampling medium to retain a compound added (spiked) to it in liquid solution.

5.2.1 Static retention efficiency - ability of the sampling medium to retain the solution spike when the sampling cartridge is stored under clean, quiescent conditions for the duration of the test period.

5.2.2 Dynamic retention efficiency - ability of the sampling medium to retain the solution spike when air or nitrogen is drawn through the sampling cartridge under normal operating conditions for the duration of the test period. The dynamic RE is normally equal to or less than the SE.

5.3 Retention time (RT) - time to elute a specific chemical from a chromatographic column. For a specific carrier gas flow rate, RT is measured from the time the chemical is injected into the gas stream until it appears at the detector.

5.4 Relative retention time (RRT) - a ratio of RTs for two chemicals for the same chromatographic column and carrier gas flow rate, where the denominator represents a reference chemical.

6. Interferences

6.1 Any gas or liquid chromatographic separation of complex mixtures of organic chemicals is subject to serious interference problems due to coelution of two or more compounds. The use of capillary or narrowbore columns with superior resolution and/or two or more columns of different polarity will frequently eliminate these problems.

6.2 The electron capture detector responds to a wide variety of organic compounds. It is likely that such compounds will be encountered as interferences during GC/ECD analysis. The NPD, FPD, and HECD detectors are element specific, but are still subject to interferences. UV detectors for HPLC are nearly universal, and the electrochemical detector may also respond to a variety of chemicals. Mass spectrometric analyses will generally provide positive identification of specific compounds.

6.3 Certain organochlorine pesticides (e.g., chlordane) are complex mixtures of individual compounds that can make difficult accurate quantification of a particular formulation in a multiple component mixture. Polychlorinated biphenyls (PCBs) may interfere with the determination of pesticides.

6.4 Contamination of glassware and sampling apparatus with traces of pesticides can be a major source of error, particularly at lower analyte concentrations. Careful attention to cleaning and handling procedures is required during all steps of sampling and analysis to minimize this source of error.

6.5 The general approaches listed below should be followed to minimize interferences.

6.5.1 Polar compounds, including certain pesticides (e.g., organophosphorus and carbamate classes), can be removed by column chromatography on alumina. This sample clean-up will permit analysis of most organochlorine pesticides.

6.5.2 PCBs may be separated from other organochlorine pesticides by column chromatography on silicic acid.

6.5.3 Many pesticides can be fractionated into groups by column chromatography on Florisil (Floridin Corp.).

7. Apparatus

7.1 Continuous-flow sampling pump (Figure 1) - (DuPont Alpha-1 Air Sampler, E.I. DuPont de Nemours & Co., Inc., Wilimington, DE, 19898, or equivalent).

7.2 Sampling cartridge (Figure 2) - constructed from a 20 mm (i.d.) x 10 cm borosilicate glass tube drawn down to a 7 mm (o.d.) open connection for attachment to the pump via Tygon tubing (Norton Co., P.O. Box 350, Akron, OH, 44309, or equivalent). The cartridge can be fabricated inexpensively from glass by Kontes (P.O. Box 729, Vineland, NJ, 08360), or equivalent.

7.3 Sorbent, polyurethane foam (PUF) - cut into a cylinder, 22 mm in diameter and 7.6 cm long, fitted under slight compression inside the cartridge. The PUF should be of the polyether type, (density No. 3014 or 0.0225 g/cm^3) used for furniture upholstery, pillows, and mattresses; it may be obtained from Olympic Products Co. (Greensboro, NC), or equivalent source. The PUF cylinders (plugs) should be slightly larger in diameter than the internal diameter of the cartridge. They may be cut by one of the following means:

- With a high-speed cutting tool, such as a motorized cork borer. Distilled water should be used to lubricate the cutting tool.
- With a hot wire cutter. Care should be exercised to prevent thermal degradation of the foam.
- With scissors, while plugs are compressed between the 22 mm circular templates.

Alternatively, pre-extracted PUF plugs and glass cartridges may be obtained commercially (Supelco, Inc., Supelco Park, Bellefonte, PA, 16823, No. 2-0557, or equivalent).

7.4 Gas chromatograph (GC) with an electron capture detector (ECD) and either an isothermally controlled or temperature-programmed heating oven. The analytical system should be complete with all required accessories including syringes, analytical columns, gases, detector, and strip chart recorder. A data system is recommended for measuring peak heights. Consult EPA Method 608 for additional specifications.

7.5 Gas chromatographic column, such as 4- or 2-mm (i.d.) x 183 cm borosilicate glass packed with 1.5% SP-2250 (Supelco, Inc.)/1.95% SP-2401 (Supelco, Inc.) on 100/120 mesh Supelcoport (Supelco, Inc.), 4% SE-30 (General Electric, 50 Fordham Rd., Wilmington, MA, 01887, or equivalent)/6% OV-210 (Ohio Valley Specialty Chemical, 115 Industry Rd., Marietta, OH, 45750, or equivalent) on 100/200 mesh Gas Chrom Q (Alltec Assoc., Applied Science Labs, 2051 Waukegan Rd, Deerfield, IL, 60015, or equivalent), 3% OV-101 (Ohio Valley Specialty Chemical) on UltraBond (Ultra Scientific, 1 Main St., Hope, RI, 02831, or equivalent) and 3% OV-1 (Ohio Valley Specialty Chemical) on 80/100 mesh Chromosorb WHP (Manville, Filtration, and Materials, P.O. Box 5108, Denver CO, 80271, or equivalent). Capillary GC column, such as 0.32 mm (i.d.) x 30 m DB-5 (J&W Scientific, 3871 Security Park Dr., Rancho Cordova, CA, 95670, or equivalent) with 0.25 um film thickness. HPLC column, such as 4.6 mm x 25 cm Zorbax SIL (DuPont Co., Concord Plaza, Wilmington, DE, 19898, or equivalent) or u-Bondapak C-18 (Millipore Corp., 80 Ashby Rd., Bedfore, MA, 01730, or equivalent).

7.6 Microsyringes - 5 uL volume or other appropriate sizes.

8. Reagents and Materials

[Note: For a detailed listing of various other items required for extract preparation, cleanup, and analysis, consult U.S. Method 608 which is provided in Appendix A of Method TO-4 in the Compendium.]

8.1 Round bottom flasks, 500 mL, ₮ 24/40 joints.

8.2 Soxhlet extractors, 300 mL, with reflux condensers.

8.3 Kuderna-Danish concentrator apparatus, 500 mL, with Snyder columns.

8.4 Graduated concentrator tubes, 10 mL, with ₮ 19/22 stoppers (Kontes, P.O. Box 729, Vineland, NJ, 08360, Cat. No. K-570050, size 1025, or equivalent).

8.5 Graduated concentrator tubes, 1 mL, with ₮ 14/20 stoppers (Kontes, Vineland, NJ, Cat. No. K-570050, size 0124, or equivalent).

8.6 TFE fluorocarbon tape, 1/2 in.

8.7 Filter tubes, size 40 mm (i.d.) x 80 mm, (Corning Glass Works, Science Products, Houghton Park, AB-1, Corning, NY, 14831, Cat. No. 9480, or equivalent).

8.8 Serum vials, 1 mL and 5 mL, fitted with caps lined with TFE fluorocarbon.

8.9 Pasteur pipettes, 9 in.

8.10 Glass wool fired at 500°C.

8.11 Boiling chips fired at 500°C.

8.12 Forceps, stainless steel, 12 in.

8.13 Gloves, latex or precleaned (5% ether/hexane Soxhlet extracted) cotton.

8.14 Steam bath.

8.15 Heating mantles, 500 mL.

8.16 Analytical evaporator, nitrogen blow-down (N-Evap®, Organomation Assoc., P.O. Box 159, South Berlin, MA, 01549, or equivalent).

8.17 Acetone, pesticide quality.

8.18 n-Hexane, pesticide quality.

8.19 Diethyl ether preserved with 2% ethanol (Mallinckrodt, Inc., Science Products Division, P.O. Box 5840, St. Louis, MO, 63134, Cat. No. 0850, or equivalent).

8.20 Sodium sulfate, anhydrous analytical grade.

8.21 Alumina, activity grade IV, 100/200 mesh.

8.22 Glass chromatographic column (2 mm i.d. x 15 cm long).

8.23 Soxhlet extraction system, including Soxhlet extractors (500 and 300 mL), variable voltage transformers, and cooling water source.

8.24 Vacuum oven connected to water aspirator.

8.25 Die.

8.26 Ice chest.

8.27 Silicic acid, pesticide quality.

8.28 Octachloronaphthalene (OCN), research grade, (Ultra Scientific, Inc., 1 Main St., Hope, RI, 02831, or equivalent).

8.29 Florisil (Floridin Corp.).

9. Assembly and Calibration of Sampling System

9.1 Description of Sampling Apparatus

9.1.1 The entire sampling system is diagrammed in Figure 1. This apparatus was developed to operate at a rate of 1-5 L/minute and is used by U.S. EPA for low volume sampling of ambient air. The method writeup presents the use of this device.

9.1.2 The sampling module (Figure 2) consists of a glass sampling cartridge in which the PUF plug is retained.

9.2 Calibration of Sampling System

9.2.1 Air flow through the sampling system is calibrated by the assembly shown in Figure 3. The air sampler must be calibrated in the laboratory before and after each sample collection period, using the procedure described below.

9.2.2 For accurate calibration, attach the sampling cartridge in-line during calibration. Vinyl bubble tubing (Fisher Scientific, 711 Forbes Ave., Pittsburgh, PA, 15219, Cat. No. 14-170-132, or equivalent) or other means (e.g., rubber stopper or glass joint) may be used to connect the large end of the cartridge to the calibration system. Refer to ASTM Standard Practice D3686, Annex A2 or Standard Practice D4185, Annex A1 for procedures to calibrate small volume air pumps.

10. Preparation of Sampling (PUF) Cartridges

10.1 The PUF adsorbent is white and yellows upon exposure to light.

10.2 For initial cleanup and quality assurance purposes, the PUF plug is placed in a Soxhlet extractor and extracted with acetone for 14 to 24 hours at 4 to 6 cycles per hour (If commercially pre-extracted PUF plugs are used, extraction with acetone is not required.). This procedure is followed by a 16-hour Soxhlet extraction with 5% diethyl ether in n-hexane. When cartridges are reused, 5% ether in n-hexane can be used as the cleanup solvent.

10.3 The extracted PUF is placed in a vacuum oven connected to a water aspirator and dried at room temperature for 2 to 4 hours (until no solvent odor is detected). The clean PUF is placed in labeled glass sampling cartridges using gloves and forceps. The cartridges are wrapped with hexane-rinsed aluminum foil and placed in glass jars fitted with TFE fluorocarbon-lined caps. The foil wrapping may also be marked for identification using a blunt probe.

10.4 At least one assembled cartridge from each batch should be analyzed as a laboratory blank before any samples are analyzed. A blank level of <10 ng/plug for single component compounds is considered to be acceptable. For multiple component mixtures, the blank level should be <100 ng/plug.

11. Sampling

11.1 After the sampling system has been assembled and calibrated as per Section 9, it can be used to collect air samples as described below.

11.2 The prepared sample cartridges should be used within 30 days of loading and should be handled only with latex or precleaned cotton gloves.

11.3 The clean sample cartridge is carefully removed from the aluminum foil wrapping (the foil is returned to jars for later use) and attached to the pump with flexible tubing. The sampling assembly is positioned with the intake downward or horizontally. The sampler is located in an unobstructed area at least 30 cm

from any obstacle to air flow. The PUF cartridge intake is positioned 1 to 2 m above ground level. Cartridge height above ground is recorded on the Sampling Data Form shown in Figure 4.

11.4 After the PUF cartridge is correctly inserted and positioned, the power switch is turned on and the sampling begins. The elapsed time meter is activated and the start time is recorded. The pumps are checked during the sampling process and any abnormal conditions discovered are recorded on the data sheet. Ambient temperatures and barometric pressures are measured and recorded periodically during the sampling procedure.

11.5 At the end of the desired sampling period, the power is turned off and the PUF cartridges are wrapped with the original aluminum foil and placed in sealed, labeled containers for transport back to the laboratory. At least one field blank is returned to the laboratory with each group of samples. A field blank is treated exactly like a sample except that no air is drawn through the cartridge. Samples are stored at -10°C or below until analyzed.

12. Sample Preparation, Cleanup, and Analysis

[Note: Sample preparation should be preformed under a properly ventilated hood.]

12.1 Sample Preparation

12.1.1 All samples should be extracted within 1 week after collection.

12.1.2 All glassware is washed with a suitable detergent; rinsed with deionized water, acetone, and hexane; rinsed again with deionized water; and fired in an oven (450°C).

12.1.3 Sample extraction efficiency is determined by spiking the samples with a known solution. Octachloronaphthalene (OCN) is an appropriate standard to use for pesticide analysis using GC/ECD techniques. The spiking solution is prepared by dissolving 10 mg of OCN in 10 mL of 10% acetone in n-hexane, followed by serial dilution with n-hexane to achieve a final concentration of 1 ug/mL.

12.1.4 The extracting solution (5% ether/hexane) is prepared by mixing 1900 mL of freshly opened hexane and 100 mL of freshly opened ethyl ether (preserved with ethanol) to a flask.

12.1.5 All clean glassware, forceps, and other equipment to be used are placed on rinsed (5% ether/hexane) aluminum foil until use. The forceps are also rinsed with 5% ether/hexane. The condensing towers are rinsed with 5% ether/hexane and 300 mL are added to a 500 mL round bottom boiling flask.

12.1.6 Using precleaned (e.g., 5% ether/hexane Soxhlet extracted) cotton gloves, the PUF cartridges are removed from the sealed container and the PUF is placed into a 300 mL Soxhlet extractor using prerinsed forceps.

12.1.7 Before extraction begins, 100 uL of the OCN solution are added directly to the top of the PUF plug. Addition of the standard demonstrates extraction efficiency of the Soxhlet procedure. [Note: Incorporating a known concentration of the solution onto the sample provides a quality assurance check to determine recovery efficiency of the extraction and analytical processes.]

12.1.8 The Soxhlet extractor is then connected to the 500 mL boiling flask and condenser. The glass joints of the assembly are wet with 5% ether/hexane to ensure a tight seal between the fittings. If necessary, the PUF plug can be adjusted using forceps to wedge it midway along the length of the siphon. The above procedure should be followed for all samples, with the inclusion of a blank control sample.

12.1.9 The water flow to the condenser towers of the Soxhlet extraction assembly is checked and the heating unit is turned on. As the samples boil, the Soxhlet extractors are inspected to ensure that they are filling and siphoning properly (4 to 6 cycles/hour). Samples should cycle for a minimum of 16 hours.

12.1.10 At the end of the extracting process, the heating units are turned off and the samples are cooled to room temperature.

12.1.11 The extracts are concentrated to a 5 mL solution using a Kuderna-Danish (K-D) apparatus. The K-D is set up and assembled with concentrator tubes. This assembly is rinsed. The lower end of the filter tube is packed with glass wool and filled with sodium sulfate to a depth of 40 mm. The filter tube is placed in the neck of the K-D. The Soxhlet extractors and boiling flasks are carefully removed from the condenser towers and the remaining solvent is drained into each boiling flask. Sample extract is carefully poured through the filter tube into the K-D. Each boiling flask is rinsed three times by swirling hexane along the sides. Once the sample has drained, the filter tube is rinsed down with hexane. Each Synder column is attached to the K-D and rinsed to wet the joint for a tight seal. The complete K-D apparatus is placed on a steam bath and the sample is evaporated to approximately 5 mL. The sample is removed from the steam bath and allowed to cool. Each Synder column is rinsed with a minimum of hexane. Sample volume is adjusted to 10 mL in a concentrator tube, which is then closed with a glass stopper and sealed with TFE fluorocarbon tape. Alternatively, the sample may be quantitatively transferred (with concentrator tube rinsing) to prescored vials and brought up to final volume. Concentrated extracts are stored at -10°C until analyzed. Analysis should occur no later than two weeks after sample extraction.

12.2 Sample Cleanup

12.2.1 If only organochlorine pesticides are sought, an alumina cleanup procedure is appropriate. Before cleanup, the sample extract is carefully reduced to 1 mL using a gentle stream of clean nitrogen.

12.2.2 A glass chromatographic column (2 mm i.d. x 15 cm long) is packed with alumina, activity grade IV, and rinsed with approximately 20 mL of n-hexane. The concentrated sample

extract is placed on the column and eluted with 10 mL of n-hexane at a rate of 0.5 mL/minute. The eluate volume is adjusted to exactly 10 mL and analyzed as per 12.3.

12.2.3 If other pesticides are sought, alternate cleanup procedures may be required (e.g., Florisil). EPA Method 608 identifies appropriate cleanup procedures.

12.3 Sample Analysis

12.3.1 Organochlorine pesticides and many nonchlorinated pesticides are responsive to electron capture detection (Table 1). Most of these compounds can be determined at concentrations of 1 to 50 ng/mL by GC/ECD.

12.3.2 An appropriate GC column is selected for analysis of the extract. (For example, 4 mm i.d. x 183 cm glass, packed with 1.5% SP-2250/1.95% SP-2401 on 100/120 mesh Supelo-port, 200°C isothermal, with 5% methane/95% argon carrier gas at 65 to 85 mL/min). A chromatogram showing a mixture containing single component pesticides determined by GC/ECD using a packed column is shown in Figure 5. A table of corresponding chromatographic characteristics follows in Figure 6.

12.3.3 A standard solution is prepared from reference materials of known purity. Standards of organochlorine pesticides may be obtained from the National Bureau of Standards and from the U.S. EPA.

12.3.4 Stock standard solutions (1.00 ug/uL) are prepared by dissolving approximately 10 milligrams of pure material in isooctane and diluting to volume in a 10 mL volumetric flask. Larger volumes can be used at the convenience of the analyst. If compound purity is certified at 96% or greater, the weight can be used without correction to calculate the concentration of the stock standard. Commerically prepared stock standards may be used at any concentration if they are certified by the manufacturer or an independent source.

12.3.5 The prepared stock standard solutions are transferred to Teflon-sealed screw-capped bottles and stored at -10°C for no longer than six months. The standard solutions should be inspected frequently for signs of degradation

or evaporation (especially before preparing calibration standards from them). [Note: Quality control check standards used to determine accuracy of the calibration standards are available from the U.S. Environmental Protection Agency, Environmental Monitoring and Support Laboratory, Cincinnati, Ohio 45268.]

12.3.6 The standard solutions of the various compounds of interest are used to determine relative retention times (RRTs) to an internal standard such as p,p'-DDE, aldrin, or OCN.

12.3.7 Before analysis, the GC column is made sensitive to the pesticide samples by injecting a standard pesticide solution ten (10) times more concentrated than the stock standard solution. Detector linearity is then determined by injecting standard solutions of three different concentrations that bracket the required range of analyses.

12.3.8 The GC system is calibrated daily with a minimum of three injections of calibrated standards. Consult EPA Method 608, Section 7 for a detailed procedure to calibrate the gas chromatograph.

12.3.9 If refrigerated, the sample extract is removed from the cooling unit and allowed to warm to room temperature. The sample extract is injected into the GC for analysis in an aliquot of approximately 2-6 uL using the solvent-flush technique (Ref. D3687, 8.1.4.3-8.1.4.5). The actual volume injected is recorded to the nearest 0.05 uL. After GC injection, the sample's response from the strip chart is analyzed by measuring peak heights or determining peak areas. Ideally, the peak heights should be 20 to 80% of full scale deflection. Using injections of 2 to 6 uL of each calibration standard, the peak height or area responses are tabulated against the mass injected (injections of 2, 4, and 6 uL are recommended). If the response (peak height or area) exceeds the linear range of detection, the extract is diluted and reanalyzed.

12.3.10 Pesticide mixtures are quantified by comparison of the total heights or areas of GC peaks with the corresponding peaks in the best-matching standard. If both PCBs and organochlorine pesticides are present in the same sample, column chromatographic separation on silicic acid is used before GC analysis, according to ASTM Standards, Vol. 14.01. If polar compounds that interfere with GC/ECD analysis are present, column chromatographic cleanup on alumina (activity grade IV) is used as per Section 12.2.2.

12.3.11 For confirmation, a second GC column is used such as 4% SE-30/6% OV-210 on 100/200 mesh Gas Chrom Q or 3% OV-1 on 80/100 mesh Chromosorb WHP. For improved resolution, a capillary column is used such as 0.32 mm (i.d.) x 30 m DB-5 with 0.25 um film thickness.

12.3.12 A chromatogram of a mixture containing single component pesticides determined by GC/ECD using a capillary column is shown in Figure 7. A table of the corresponding chromatographic characteristics follows in Figure 8.

12.3.13 Class separation and improved specificity can be achieved by column chromatographic separation on Florisil as per EPA Method 608. For improved specificity, a Hall electrolytic conductivity detector operated in the reductive mode may be substituted for the electron capture detector. Limits of detection will be reduced by at least an order of magnitude, however.

13. GC Calibration

Appropriate calibration procedures are identified in EPA Method 608, Section 7.

14. Calculations

14.1 The concentration of the analyte in the extract solution is taken from a standard curve where peak height or area is plotted linearly against concentration in nanograms per milliliter (ng/mL). If the detector response is known to be linear, a single point is used as a calculation constant.

14.2 From the standard curve, determine the ng of analyte standard equivalent to the peak height or area for a particular compound.

14.3 Determine if the field blank is contaminated. Blank levels should not exceed 10 ng/sample for organochlorine pesticides or 100 ng/sample for other pesticides. If the blank has been contaminated, the sampling series must be held suspect.

14.4 Quantity of the compound in the sample (A) is calculated using the following equation:

$$A = 1000 \left(\frac{A_s \times V_e}{V_i} \right)$$

where:

A = total amount of analyte in the sample (ng).

A_s = calculated amount of material (ng) injected onto the chromatograph based on calibration curve for injected standards.

V_e = final volume of extract (mL).

V_i = volume of extract injected (uL).

1000 = factor for converting microliters to milliliters.

14.5 The extraction efficiency (EE) is determined from the recovery of octachloronaphthalene (OCN) spike as follows:

$$EE(\%) = \frac{S}{S_a} \times 100$$

where:

S = amount of spike (ng) recovered.

S_a = amount of spike (ng) added to plug.

14.6 The total amount of nanograms found in the sample is corrected for extraction efficiency and laboratory blank as follows:

$$A_c = \frac{A - A_o}{EE\ (\%)}$$

where:

A_c = corrected amount of analyte in sample (ng).

A_o = amount of analyte in blank (ng).

14.7 The total volume of air sampled under ambient conditions is determined using the following equation:

$$V_a = \frac{\sum_{i=1}^{n} (T_i \times F_i)}{1000\ L/m^3}$$

where:

V_a = total volume of air sampled (m^3).
T_i = length of sampling segment (min) between flow checks.
F_i = average flow (L/min) during sampling segment.

14.8 The air volume is corrected to 25° and 760 mm Hg (STP) as follows:

$$V_s = V_a \left(\frac{P_b - P_w}{760\ mm\ Hg}\right) \cdot \left(\frac{298\ K}{t_A}\right)$$

where:

V_s = volume of air (m^3) at standard conditions.
V_a = total volume of air sampled (m^3).
P_b = average ambient barometric pressure (mm Hg).
P_w = vapor pressure of water (mm Hg) at calibration temperature.
t_A = average ambient temperature (K).

14.9 If the proper criteria for a sample have been met, concentration of the compound in a cubic meter of air is calculated as follows:

$$ng/m^3 = \frac{A_c}{V_s} \times \frac{100}{SE(\%)}$$

where:

SE = sampling efficiency as determined by the procedure outlined in Section 15.

If it is desired to convert the air concentration value to parts per trillion (wt/wt) in dry air at STP, the following conversion is used:

$$ppt = 1.205\ ng/m^3$$

The air concentration is converted to parts per trillion (v/v) in air at STP as follows:

$$\text{pptv} = 24.45 \left(\frac{\text{ng/m}^3}{\text{MW}}\right)$$

where:

MW = molecular weight of the compound of interest.

15. Sampling and Retention Efficiencies

15.1 Before using this procedure, the user should determine the sampling efficiency for the compound of interest. The sampling efficiencies shown in Tables 2 and 3 were determined for approximately 1 m^3 of air at about 25°C, sampled at 3.8 L/min. Sampling efficiencies for the pesticides shown in Table 4 are for 24 hours at 3.8 L/min and 25°C. For compounds not listed, longer sampling times, different flow rates, or other air temperatures, the following procedure may be used to determine sampling efficiencies.

15.2 SE is determined by a modified impinger assembly attached to the sampler pump (Figure 9). Clean PUF is placed in the pre-filter location and the inlet is attached to a nitrogen line. [Note: Nitrogen should be used instead of air to prevent oxidation of the compounds under test. The oxidation would not necessarily reflect what may be encountered during actual sampling and may give misleading sampling efficiencies.] PUF plugs (22 mm x 7.6 cm) are placed in the primary and secondary traps and are attached to the pump.

15.3 A standard solution of the compound of interest is prepared in a volatile solvent (e.g., hexane, pentane, or benzene). A small, accurately measured volume (e.g., 1 mL) of the standard solution is placed into the modified midget impinger. The sampler pump is set at the rate to be used in field application and then activated. Nitrogen is drawn through the assembly for a period of time equal to or exceeding that intended for field application. After the desired sampling test period, the PUF plugs are removed and analyzed separately as per Section 12.3.

15.4 The impinger is rinsed with hexane or another suitable solvent and quantitatively transferred to a volumetric flask or concentrator tube for analysis.

15.5 The sampling efficiency (SE) is determined using the following equation:

$$\% \text{ SE} = \frac{W_1}{W_o - W_r} \times 100$$

where:

W_1 = amount of compound extracted from the primary trap (ng).
W_o = original amount of compound added to the impinger (ng).
W_r = residue left in the impinger at the end of the test (ng)

15.6 If material is found in the secondary trap, it is an indication that breakthrough has occurred. The addition of the amount found in the secondary trap, W_2, to W_1, will provide an indication of the overall sampling efficiency of a tandem-trap sampling system. The sum of W_1, W_2 (if any), and W_r must equal (approximately $\pm$ 10%) W_o or the test is invalid.

15.7 If the compound of interest is not sufficiently volatile to vaporize at room temperature, the impinger may be heated in a water bath or other suitable heater to a maximum of 50°C to aid volatilization. If the compound of interest cannot be vaporized at 50°C or without thermal degradation, dynamic retention efficiency (RE_d) may be used to estimate sampling efficiency. Dynamic retention efficiency is determined in the manner described in 15.8. Table 5 lists those organochlorine pesticides which dynamic retention efficiencies have been determined.

15.8 A pair of PUF plugs is spiked by slow, dropwise addition of the standard solution to one end of each plug. No more than 0.5 to 1 mL of solution should be used. Amounts added to each plug should be as nearly the same as possible. The plugs are allowed to dry for 2 hours in a clean, protected place (e.g., dessicator). One spiked plug is placed in the primary trap so that the spiked end is at the intake and one clean unspiked plug is placed in the secondary trap. The other spiked plug is wrapped in hexane-rinsed aluminum foil and stored in a clean place for the duration of the test (this is the static control plug, Section 15.9). Prefiltered nitrogen or ambient air is drawn through the assembly as per Section 15.3. [Note: Impinger may be discarded.] Each PUF plug (spiked and static control) is analyzed separately as per Section 12.3.

15.9 % RE_d is calculated as follows:

$$\% \ RE_d = \frac{W_1}{W_o} \times 100$$

where:

W_1 = amount of compound (ng) recovered from primary plug.
W_o = amount of compound (ng) added to primary plug.

If a residue, W_2, is found on the secondary plug, breakthrough has occurred. The sum of $W_1 + W_2$ must equal W_o, within 25% or the test is invalid. For most compounds tested by this procedure, % RE_d values are generally less than % SE values determined per Section 15.1. The purpose of the static RE_d determination is to establish any loss or gain of analyte unrelated to the flow of nitrogen or air through the PUF plug.

16. Performance Criteria and Quality Assurance

This section summarizes required quality assurance (QA) measures and provides guidance concerning performance criteria that should be achieved within each laboratory.

16.1 Standard Operating Procedures (SOPs)

16.1.1 Users should generate SOPs describing the following activities accomplished in their laboratory: (1) assembly, calibration, and operation of the sampling system, with make and model of equipment used; (2) preparation, purification, storage, and handling of sampling cartridges, (3) assembly, calibration, and operation of the GC/ECD system, with make and model of equipment used; and (4) all aspects of data recording and processing, including lists of computer hardware and software used.

16.1.2 SOPs should provide specific stepwise instructions and should be readily available to, and understood by, the laboratory personnel conducting the work.

16.2 Process, Field, and Solvent Blanks

16.2.1 One PUF cartridge from each batch of approximately twenty should be analyzed, without shipment to the field, for the compounds of interest to serve as a process blank.

16.2.2 During each sampling episode, at least one PUF cartridge should be shipped to the field and returned, without drawing air through the sampler, to serve as a field blank.

16.2.3 Before each sampling episode, one PUF plug from each batch of approximately twenty should be spiked with a known amount of the standard solution. The spiked plug will remain in a sealed container and will not be used during the sampling peroid. The spiked plug is extracted and analyzed with the other samples. This field spike acts as a quality assurance check to determine matrix spike recoveries and to indicate sample degradation.

16.2.4 During the analysis of each batch of samples, at least one solvent process blank (all steps conducted but no PUF cartridge included) should be carried through the procedure and analyzed.

16.2.5 Blank levels should not exceed 10 ng/sample for single components or 100 ng/sample for multiple component mixtures (e.g., for organochlorine pesticides).

16.3 Sampling Efficiency and Spike Recovery

16.3.1 Before using the method for sample analysis, each laboratory must determine its sampling efficiency for the component of interest as per Section 15.

16.3.2 The PUF in the sampler is replaced with a hexane-extracted PUF. The PUF is spiked with a microgram level of compounds of interest by dropwise addition of hexane solutions of the compounds. The solvent is allowed to evaporate.

16.3.3 The sampling system is activated and set at the desired sampling flow rate. The sample flow is monitored for 24 hours.

16.3.4 The PUF cartridge is then removed and analyzed as per Section 12.3.

16.3.5 A second sample, unspiked, is collected over the same time period to account for any background levels of components in the ambient air matrix.

16.3.6 In general, analytical recoveries and collection efficiencies of 75% are considered to be acceptable method performance.

16.3.7 Replicate (at least triplicate) determinations of collection efficiency should be made. Relative standard deviations for these replicate determinations of ±15% or less are considered acceptable performance.

16.3.8 Blind spiked samples should be included with sample sets periodically as a check on analytical performance.

16.4 Method Precision and Accuracy

16.4.1 Several different parameters involved in both the sampling and analysis steps of this method collectively determine the accuracy with which each compound is detected. As the volume of air sampled is increased, the sensitivity of detection increases proportionately within limits set by (a) the retention efficiency for each specific component trapped on the polyurethane foam plug, and (b) the background interference associated with the analysis of each specific component at a given site sampled. The accuracy of detection of samples recovered by extraction depends on (a) the inherent response of the particular GC detector used in the determinative step, and (b) the extent to which the sample is concentrated for analysis. It is the responsibility of the analyst(s) performing the sampling and analysis steps to adjust parameters so that the required detection limits can be obtained.

16.4.2 The reproducibility of this method has been determined to range from ±5 to ±30% (measured as the relative standard deviation) when replicate sampling cartridges are used (N>5). Sample recoveries for individual compounds generally fall within the range of 90 to 110%, but recoveries ranging from 75 to 115% are considered acceptable. PUF alone may give lower recoveries for more volatile compounds (e.g., those with saturation vapor pressures $>10^{-3}$ mm Hg). In those cases, another sorbent or a combination of PUF and Tenax GC should be employed.

16.5 Method Safety

This procedure may involve hazardous materials, operations, and equipment. This method does not purport to address all of the safety problems associated with its use. It is the users responsibility to consult and establish appropriate safety and health practices and determine the applicability of regulatory limitations prior to the implementation of this procedure. This should be part of the users SOP manual.

TABLE 1. PESTICIDES DETERMINED BY GAS CHROMATOGRAPHY/ELECTRON CAPTURE DETECTOR (GC/ECD)

Aldrin	Folpet
BHC (α- and β-Hexa-chlorocyclohexanes)	Heptachlor
Captan	Heptachlor epoxide
Chlordane, technical	Hexachlorobenzene
Chlorothalonil	Lindane (γ-BHC)
Chlorpyrifos	Methoxychlor
2,4,-D esters	Mexacarbate
p,p,-DDT	Mirex
p,p,-DDE	trans-Nonachlor
Dieldrin	Oxychlordane
Dichlorvos (DDVP)	Pentachlorobenzene
Dicofol	Pentachlorophenol
Endrin	Ronnel
Endrin aldehyde	2,4,5-Trichlorophenol

TABLE 2. SAMPLING EFFICIENCIES FOR SOME ORGANOCHLORINE PESTICIDES

Compound	Quantity Introduced, ug	Air Volume, m^3	Sampling Efficiency, % mean	RSD	n
α-Hexachlorocyclohexane (α-BHC)	0.005	0.9	115	8	6
γ-Hexachlorocyclohexane (Lindane)	0.05-1.0	0.9	91.5	8	5
Hexachlorobenzene †	0.5, 1.0	0.9	94.5	8	5
Chlordane, technical	0.2	0.9	84.0	11	8
p,p'-DDT	0.6, 1.2	0.9	97.5	21	12
p,p'-DDE	0.2, 0.4	0.9	102	11	12
Mirex	0.6, 1.2	0.9	85.9	22	7
Pentachlorobenzene †	1.0	0.9	94	12	5
Pentachlorophenol	1.0	0.9	107	16	5
2,4,5-Trichlorophenol †	1.0	0.9	108	3	5
2,4-D Esters:					
isopropyl	0.5	3.6	92.0	5	12
butyl	0.5	3.6	82.0	10	11
isobutyl	0.5	3.6	79.0	20	12
isooctyl	0.5	3.6	>80*	--	--

* Not vaporized. Value base on %RE = 81.0 (RSD = 10%, n = 6).

† Semivolatile organochlorine pesticides.

TABLE 3. SAMPLING EFFICIENCIES FOR ORGANOPHOSPHORUS PESTICIDES

Compound	Quantity Introduced,[b] ug	Sampling Efficiency, % mean	RSD	n
Dichlorvos (DDVP)	0.2	72.0	13	2
Ronnel	0.2	106	8	12
Chlorpyrifos	0.2	108	9	12
Diazinon[a]	1.0	84.0	18	18
Methyl parathion[a]	0.6	80.0	19	18
Ethyl parathion[a]	0.3	75.9	15	18
Malathion[a]	0.3	100[c]	--	--

a Analyzed by gas chromatography with nitrogen phosphorus detector or flame photometric detector.

b Air volume = 0.9 m^3.

c Decomposed in generator; value based on %RE = 101 (RDS = 7, n = 4).

TABLE 4. EXTRACTION AND 24-HOUR SAMPLING EFFICIENCIES FOR VARIOUS PESTICIDES AND RELATED COMPOUNDS

Compound	Extraction Efficiency, *%		Sampling Efficiency, † %, at 10 ng/m^3		100 ng/m^3		1000 ng/m^3	
	mean	RSD	mean	RSD	mean	RSD	mean	RSD
Chlorpyrifos	83.3	11.5	83.7	18.0	92.7	15.1	83.7	18.0
Pentachlorophenol	84.0	22.6	66.7	42.2	52.3	36.2	66.7	42.2
Chlordane	95.0	7.1	96.0	1.4	74.0	8.5	96.0	1.4
Lindane	96.0	6.9	91.7	11.6	93.0	2.6	91.7	11.6
DDVP	88.3	20.2	51.0	53.7	106.0	1.4	51.0	53.7
2,4-D methyl ester	--	--	75.3	6.8	58.0	23.6	75.3	6.8
Heptachlor	99.0	1.7	97.3	13.6	103.0	17.3	97.3	13.6
Aldrin	97.7	4.0	90.7	5.5	94.0	2.6	90.7	5.5
Dieldrin	95.0	7.0	82.7	7.6	85.0	11.5	82.7	7.6
Ronnel	80.3	19.5	74.7	12.1	60.7	15.5	74.7	12.2
Diazinon	72.0	21.8	63.7	18.9	41.3	26.6	63.7	19.9
trans-Nonachlor	97.7	4.0	96.7	4.2	101.7	15.3	96.7	4.2
Oxychlordane	100.0	0.0	95.3	9.5	94.3	1.2	95.3	9.5
α-BHC	98.0	3.5	86.7	13.7	97.0	18.2	86.7	13.7
Chlorothalonil	90.3	8.4	76.7	6.1	70.3	6.5	76.7	6.1
Heptachlor epoxide	100.0	0.0	95.3	5.5	97.7	14.2	95.3	5.5

* Mean values for one spike at 550 ng/plug and two spikes at 5500 ng/plug.
† Mean values for three determinations.

Table 5. EXTRACTION AND 24-HOUR SAMPLING EFFICIENCIES FOR VARIOUS PESTICIDES AND RELATED COMPOUNDS

Compound	Extraction Efficiency, *%		Retention Efficiency, † %, at					
			10 ng/m^3		100 ng/m^3		1000 ng/m^3	
	mean	RSD	mean	RSD	mean	RSD	mean	RSD
Dicofol	57.0	8.5	38.0	25.9	65.0	8.7	69.0	--
Captan	73.0	12.7	56.0	--	45.5	64.3	84.3	16.3
Methoxychlor	65.5	4.9	--	--	--	--	78.5	2.1
Folpet	86.7	11.7	--	--	78.0	--	93.0	--

* Mean Values for one spike at 550 ng/plug and two spikes at 5500 ng/plug.
† Mean Values for generally three determinations.

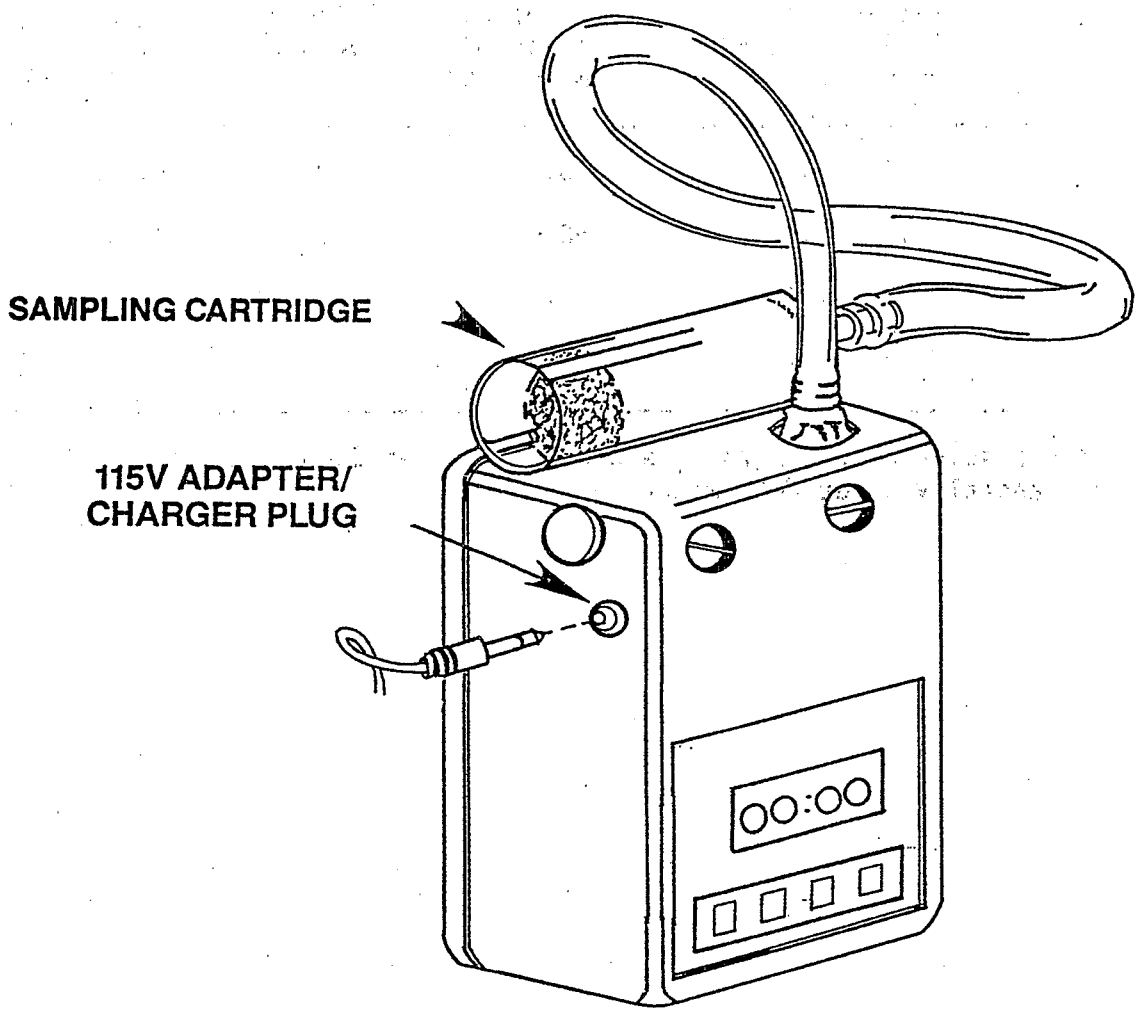

FIGURE 1. LOW VOLUME AIR SAMPLER

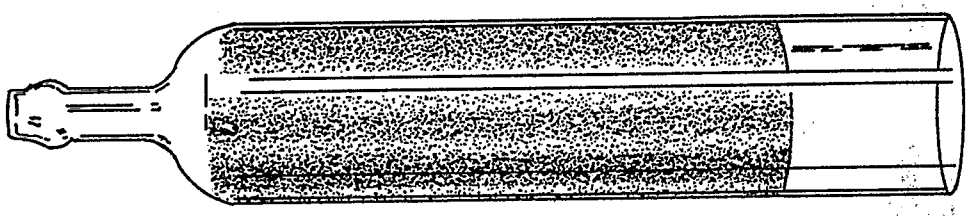

FIGURE 2. POLYURETHANE FOAM (PUF) SAMPLING CARTRIDGE

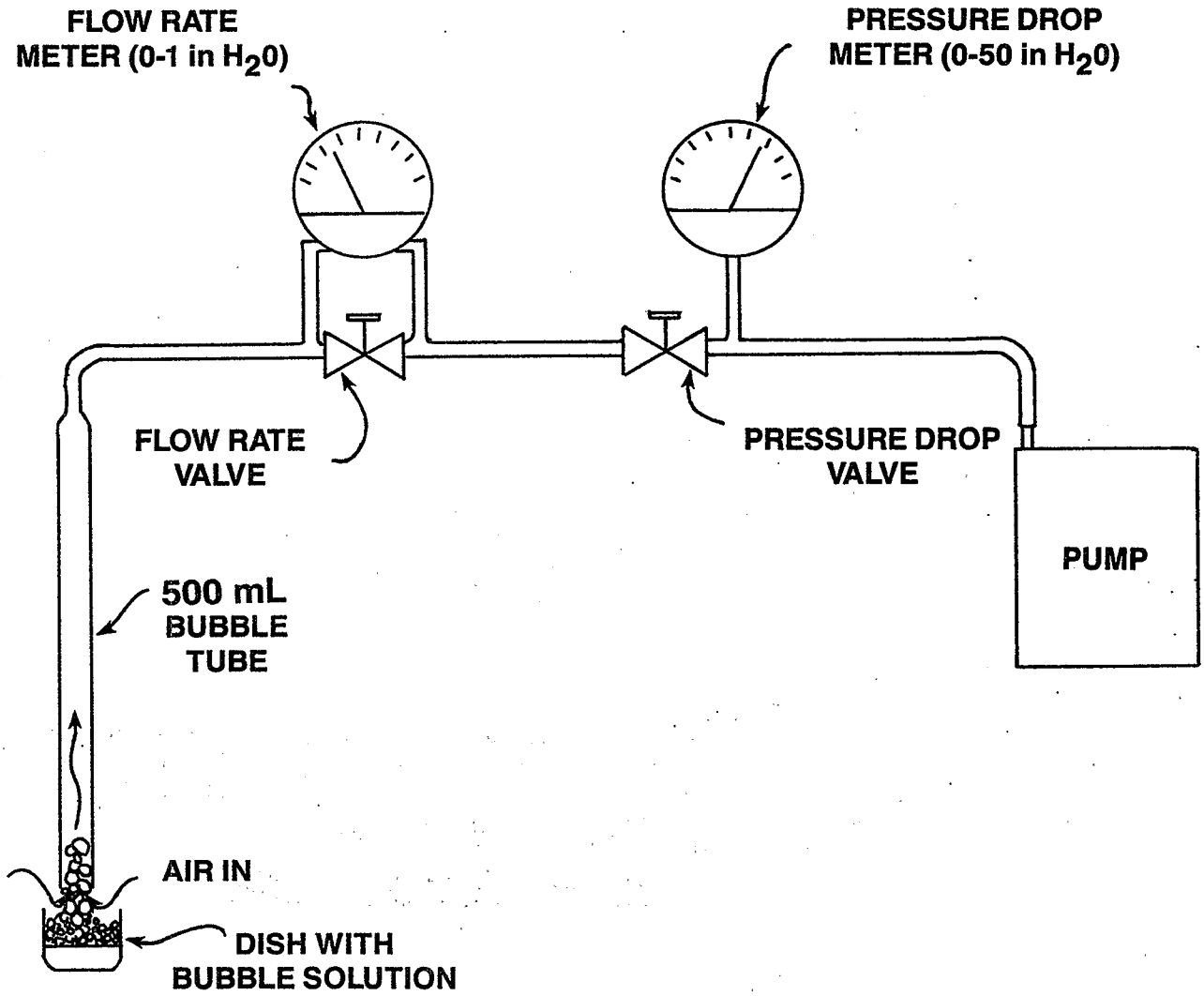

FIGURE 3. CALIBRATION ASSEMBLY FOR AIR SAMPLER PUMP

Site Date Performed by

Sampler S/N	Sampling Location I.D.	Height above Ground	PUF Cart. No.	Sampling Period		Sampling Time min.		Pump Timer hr. min.	Low flow Indication		Comments
				Start	Stop				Yes	No	

Checked by _____

Date _____

FIGURE 4. LOW VOLUME PESTICIDE SAMPLING DATA FORM

OPERATING CONDITIONS

Column Type:	1.5% SP 2250/1.95% SP 2401, ¼" glass.
Temperature:	200°C isothermal.
Detector:	Electron Capture.
Carrier Gas:	5% Methane/95% Argon.
Flow Rate:	65 to 85 mL/min.

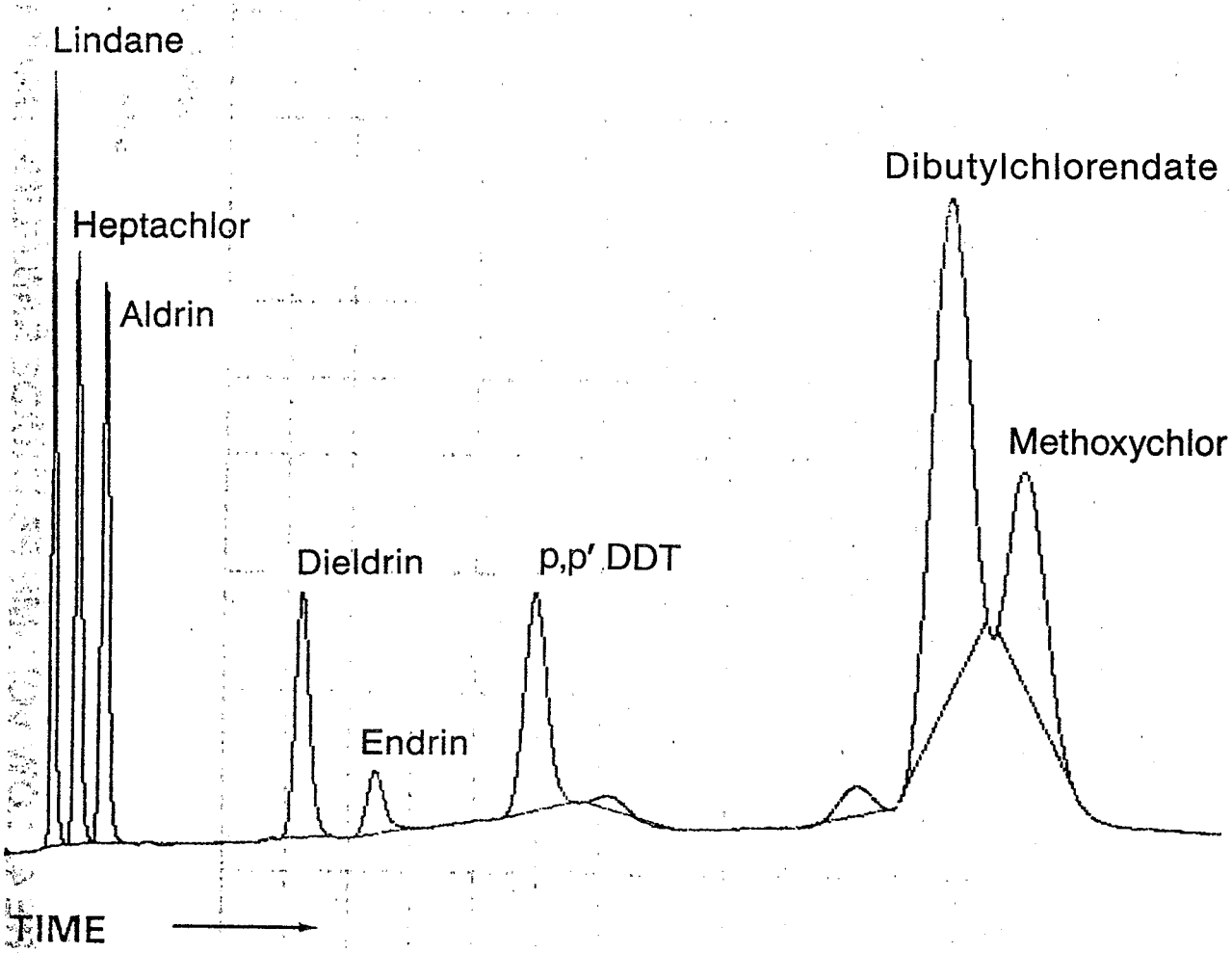

FIGURE 5. CHROMATOGRAM SHOWING A MIXTURE OF SINGLE COMPONENT PESTICIDES DETERMINED BY GC/ECD USING A PACKED COLUMN

EXTERNAL STANDARD TABLE
SINGLE COMPONENT PESTICIDE MIXTURE (5uL) ON
A PACKED COLUMN

RETENTION TIME	COMPOUND NAME	CONCENTRATION IN PG ON COLUMN	AREA/ HEIGHT
2.77	gamma-BHC (Lindane)	500	8.2
3.37	Heptachlor	500	10.4
4.03	Aldrin	500	12.0
8.90	Dieldrin	500	24.7
10.72	Endrin	500	30.2
14.63	p,p'-DDT	500	39.0
24.87	Dibutylchlorendate*	2500	61.4
26.82	Methoxychlor	2500	57.5

* Internal standard used for earlier pesticide detection.

FIGURE 6. CHROMATOGRAPHIC CHARACTERISTICS OF THE SINGLE COMPONENT PESTICIDE MIXTURE DETERMINED BY GC/ECD USING A PACKED COLUMN

OPERATING CONDITIONS

Column Type: DB-5 0.32 capillary, 0.25 um film thickness

Column Temperature Program: 90°C (4 min)/16°C per min to 154°C/4°C per min to 270°C.

Detector: Electron Capture

Carrier Gas: Helium at 1 mL/min.

Make Up Gas: 5% Methane/95% Argon at 60 mL/min.

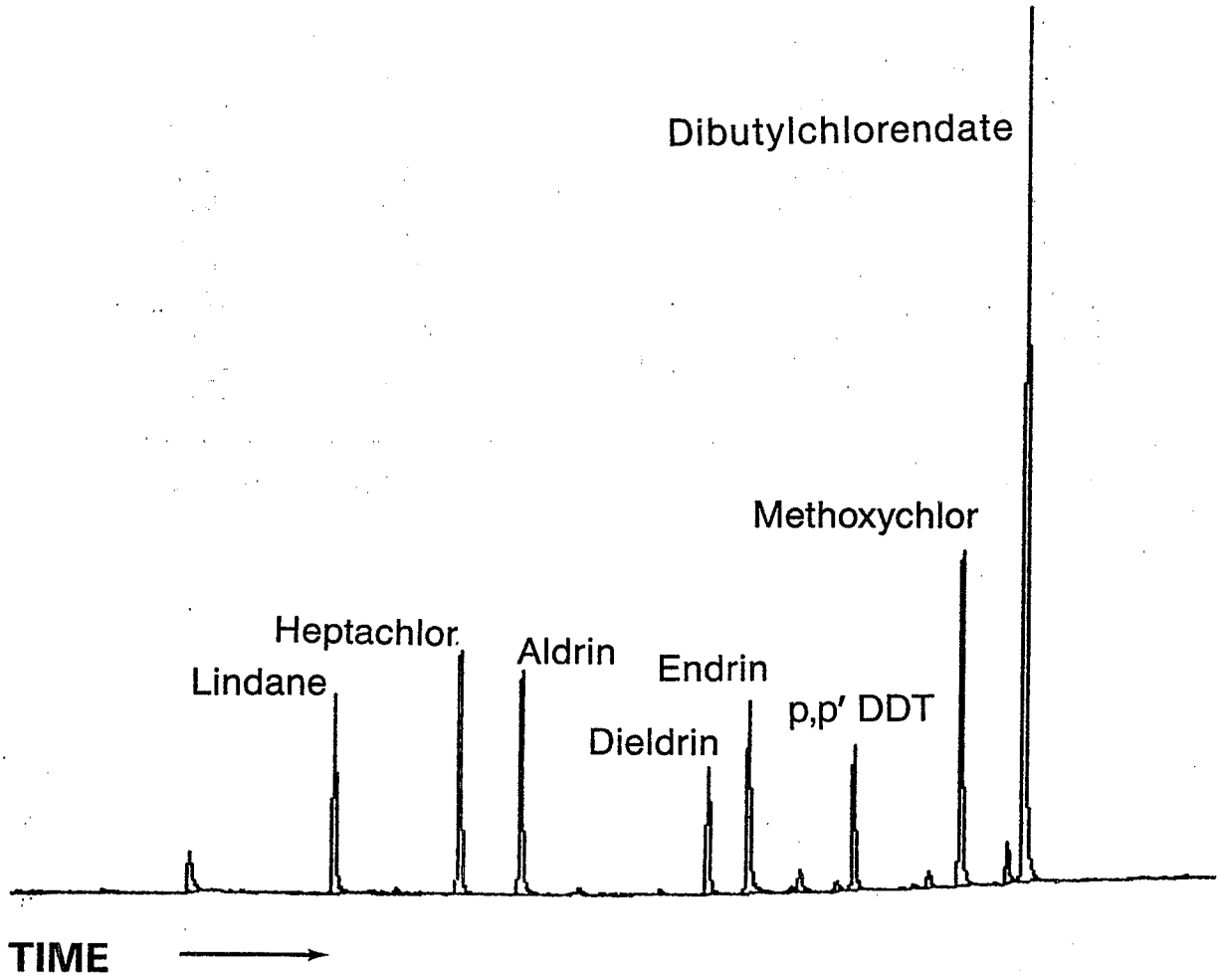

FIGURE 7. CHROMATOGRAM SHOWING A MIXTURE OF SINGLE COMPONENT PESTICIDES DETERMINED BY GC/ECD USING A CAPILLARY COLUMN

EXTERNAL STANDARD TABLE
SINGLE COMPONENT PESTICIDE MIXTURE (2uL) ON
ON A CAPILLARY COLUMN

RETENTION TIME	COMPOUND NAME	CONCENTRATION IN PG ON COLUMN	AREA/ HEIGHT
14.28	gamma-BHC (Lindane)	200	5.2
17.41	Heptachlor	200	5.3
18.96	Aldrin	200	5.4
23.63	Dieldrin	200	5.8
24.63	Endrin	200	6.3
27.24	p,p'-DDT	200	5.6
29.92	Methoxychlor	1000	5.5
31.49	Dibutylchlorendate*	1000	5.4

* Internal standard used for earlier pesticide detection.

FIGURE 8. CHROMATOGRAPHIC CHARACTERISTICS OF THE SINGLE COMPONENT PESTICIDE MIXTURE DETERMINED BY GC/ECD USING A CAPILLARY COLUMN

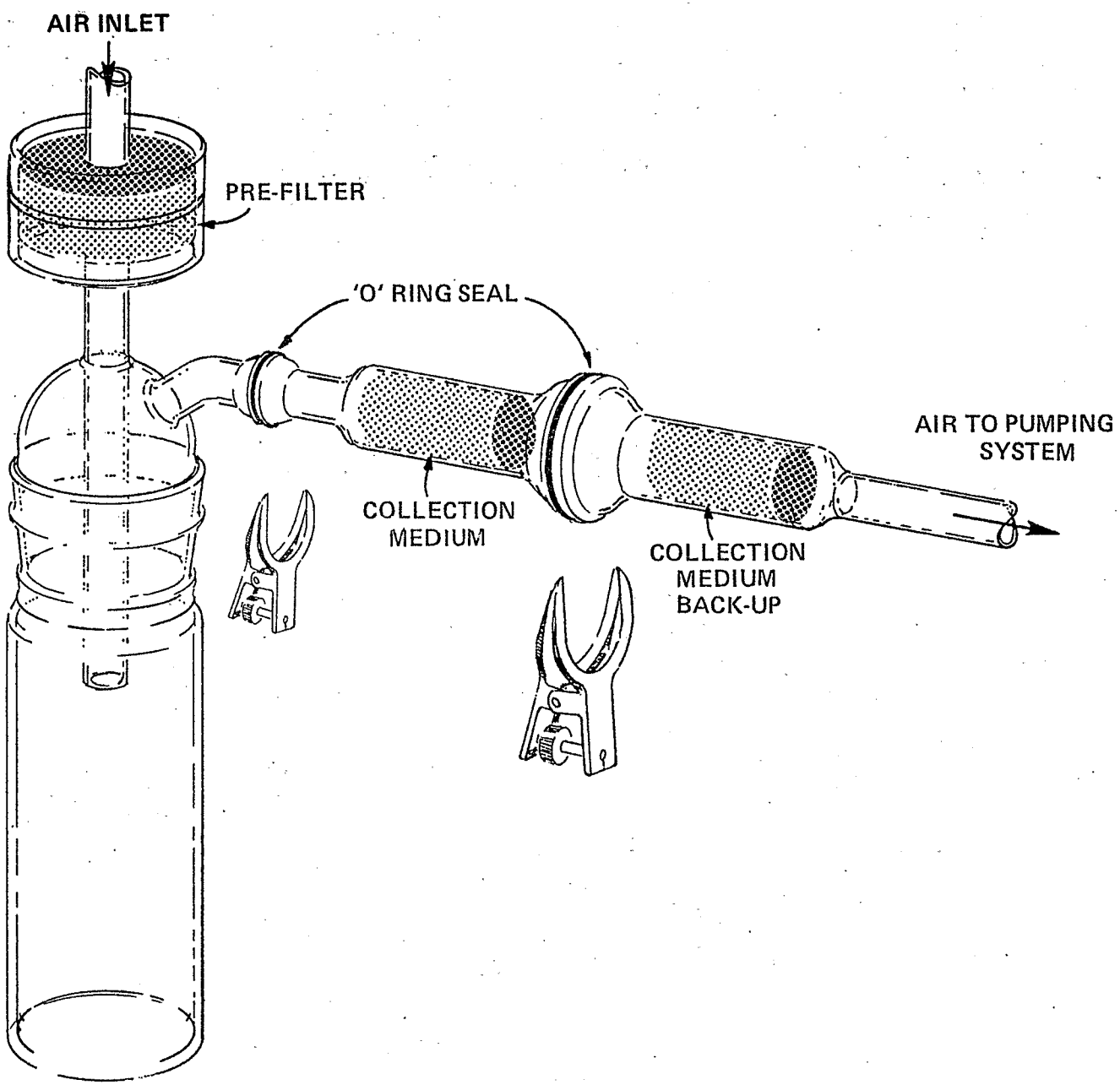

FIGURE 9. APPARATUS FOR DETERMINING SAMPLING EFFICIENCIES

METHOD TO11

METHOD FOR THE DETERMINATION OF FORMALDEHYDE IN AMBIENT AIR USING ADSORBENT CARTRIDGE FOLLOWED BY HIGH PERFORMANCE LIQUID CHROMATOGRAPHY (HPLC)

1. Scope

1.1 This document describes a method for the determination of formaldehyde in ambient air utilizing solid adsorbent followed by high performance liquid chromatographic detection. Formaldehyde has been found to be a major promoter in the formation of photochemical ozone. In particular, short term exposure to formaldehyde and other specific aldehydes (acetaldehyde, acrolein, crotonaldehyde) is known to cause irritation of the eyes, skin, and mucous membranes of the upper respiratory tract.

1.2 Compendium Method TO5, "Method For the Determination of Aldehydes and Ketones in Ambient Air Using High Performance Liquid Chromatography (HPLC)" involves drawing ambient air through a midget impinger sampling train containing 10 mL of 2N HCl/0.05% 2,4-dinitrophenylhydrazine (DNPH) reagent. Aldehydes and ketones readily form a stable derivative with the DNPH reagent, and the DNPH derivative is analyzed for aldehydes and ketones utilizing HPLC. Method TO11 modifies the sampling procedures outlined in Method TO5 by introducing a coated adsorbent for sampling formaldehyde. This current method is based on the specific reaction of organic carbonyl compounds (aldehydes and ketones) with DNPH-coated cartridges in the presence of an acid to form stable derivatives according to the following equation:

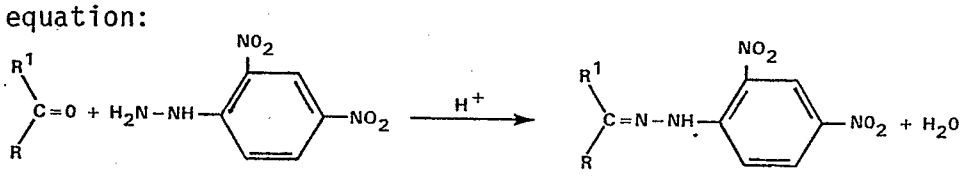

CARBONYL GROUP (ALDEHYDES AND KETONES) | 2,4-DINITROPHENYLHYDRAZINE (DNPH) | DNPH-DERIVATIVE | WATER

where R and R' are organic alkyl or aromatic group (ketones) or either substituent is a hydrogen (aldehydes).

The determination of formaldehyde from the DNPH-formaldehyde derivative is similar to Method T05 in incorporating HPLC. The detection limits have been extended and other aldehydes and ketones can be determined as outlined in Section 14.

1.3 The sampling method gives a time-weighted average (TWA) sample. It can be used for long-term (1-24 hr) sampling of ambient air where the concentration of formaldehyde is generally in the low (1-20) ppb (v/v) or for short-term (5-60 min) sampling of source-impacted atmospheres where the concentration of formaldehyde could reach the ppm (v/v) levels.

1.4 The sampling flow rate, as described in this document, is presently limited to about 1.5 L/min. This limitation is principally due to the high pressure drop across the DNPH-coated silica gel cartridges. Because of this, the procedure is not compatible with pumps used in personal sampling equipments.

1.5 The method instructs the user to purchase Sep-PAK chromatographic grade silica gel cartridges (Waters Associates, 34 Maple St., Milford, MA 01757) and apply acidified DNPH in situ to each cartridge as part of the user-prepared quality assurance program (1,2). Commercially pre-coated DNPH cartridges are also available. [Caution: Recent studies have indicated abnormally high formaldehyde background levels in commercially prepacked cartridges. It is advised that three cartridges randomly selected from each production lot, be analyzed for formaldehyde prior to use to determine acceptable levels.] Thermosorb/F cartridges (Thermedics, Inc., 470 Wildwood St., P.O. Box 2999, Woburn, MA, 01888-1799) can be purchased prepacked. The cartridges are 1.5 cm ID x 2 cm long polyethylene tubes with Luer®-type fittings on each end. The adsorbent is composed of 60/80-mesh Florisil (magnesium silicate) coated with 2,4-dinitrophenylhydrazine. The adsorbent is held in place with 100 mesh stainless steel screens at each end. The precoated cartridges are used as received and are discarded after use. The cartridges are stored in glass culture tubes with polypropylene caps and placed in cold storage when not in use.

1.6 This method may involve hazardous materials, operations, and equipments. This method does not purport to address all the safety problems associated with its use. It is the responsibility of whoever uses this method to consult and establish appropriate safety and health practices and determine the applicability of regulatory limitations prior to use.

2. Applicable Documents

2.1 ASTM Standards

D1356 - Definition of Terms Relating to Atmospheric Sampling and Analysis

E682 - Practice for Liquid Chromatography Terms and Relationships

2.2 Other Documents

Existing Procedures (3-5)

Ambient Air Studies (6-8)

U. S. EPA Technical Assistance Document (9)

Indoor Air Studies (10-11)

3. Summary of Method

3.1 A known volume of ambient air is drawn through a prepacked silica gel cartridge coated with acidified DNPH at a sampling rate of 500-1200 mL/min for an appropriate period of time. Sampling rate and time are dependent upon carbonyl concentration in the test atmosphere.

3.2 After sampling, the sample cartridges are capped and placed in borosilicate glass culture tubes with polypropylene caps. The capped tubes are then placed in a friction-top can containing a pouch of charcoal and returned to the laboratory for analysis. Alternatively, the sample vials can be placed in a styrofoam box with appropriate padding for shipment to the laboratory. The cartridges may either be placed in cold storage until analysis or immediately washed by gravity feed elution of 6 mL of acetonitrile from a plastic syringe reservoir to a graduated test tube or a 5 mL volumetric flask.

3.3 The eluate is then topped to a known volume and refrigerated until analysis.

3.4 The DNPH-formaldehyde derivative is determined using isocratic reverse phase HPLC with an ultraviolet (UV) absorption detector operated at 360 nm.

3.5 A cartridge blank is likewise desorbed and analyzed as per Section 3.4.

3.6 Formaldehyde and other carbonyl compounds in the sample are identified and quantified by comparison of their retention times and peak heights or peak areas with those of standard solutions.

4. Significance

4.1 Formaldehyde has been found to be a major promoter in the formation of photochemical ozone (12). In particular, short term exposure to formaldehyde and other specific aldehydes (acetaldehyde, acrolein, crotonaldehyde) is known to cause irritation of the eyes, skin, and mucous membranes of the upper respiratory tract (13). Animal studies indicate that high concentrations can injure the lungs and other organs of the body (14). Formaldehyde may contribute to eye irritation and unpleasant odors that are common annoyances in polluted atmospheres.

4.2 Formaldehyde emissions result from incomplete combustion of hydrocarbons and other organic materials. The major emission sources appear to be vehicle exhaust, incineration of wastes, and burning of fuels (natural gas, fuel oil, and coal). In addition, significant amounts of atmospheric formaldehyde can result from photochemical reactions between reactive hydrocarbons and nitrogen oxides. Moreover, formaldehyde can react photochemically to produce other products, including ozone, peroxides, and peroxyacetyl nitrate compounds. Local sources of formaldehyde may include manufacturing and other industrial processes using the chemical. In particular, formaldehyde emissions are associated with any industrial process that results in the pyrolysis of organic compounds in air or oxygen. This test method provides a means to determine concentrations of formaldehyde and other carbonyl compounds in emissions sources in various working environment and in ambient indoor and outdoor atmospheres.

5. Definitions

5.1 Definitions used in this document and in any user-prepared Standard Operating Procedures (SOPs) should be consistent with ASTM Methods D1356 and E682. All abbreviations and symbols within this document are defined the first time they are used.

6. Interferences

6.1 This procedure has been written specifically for the sampling and analysis of formaldehyde. Interferences in the method are certain isomeric aldehydes or ketones that may be unresolved by the HPLC system when analyzing for other aldehydes and ketones. Organic compounds that have the same retention time and significant absorbance at 360 nm as the DNPH derivative of formaldehyde will interfere. Such interferences can often be overcome by altering the separation conditions (e.g., using alternative HPLC columns or mobile phase compositions). However, other aldehydes and ketones can be detected with a modification of the basic procedure. In particular, chromatographic conditions can be optimized to separate acrolein, acetone, and propionaldehyde and the following higher molecular weight aldehydes and ketones (within an analysis time of about one hour) by utilizing two Zorbax ODS columns in series under a linear gradient program:

Formaldehyde	Isovaleraldehyde
Acetaldehyde	Valeraldehyde
Acrolein	o-Tolualdehyde
Acetone	m-Tolualdehyde
Propionaldehyde	p-Tolualdehyde
Crotonaldehyde	Hexanaldehyde
Butyraldehyde	2,5-Dimethylbenzaldehyde
Benzaldehyde	

The linear gradient program varies the mobile phase composition periodically to achieve maximum resolution of the C-3, C-4, and benzaldehyde region of the chromatogram. The following gradient program was found to be adequate to achieve this goal: Upon sample injection, linear gradient from 60-75% acetonitrile/40-25% water in 30 minutes, linear gradient from 75-100% acetonitrile/ 25-0% water in 20 minutes, hold at 100% acetonitrile for 5 minutes, reverse gradient to 60% acetonitrile/40% water in 1 minute, and maintain isocratic at 60% acetonitrile/40% water for 15 minutes.

6.2 Formaldehyde contamination of the DNPH reagent is a frequently encountered problem. The DNPH must be purified by multiple recrystallizations in UV grade acetonitrile. Recrystallization is accomplished at 40-60°C by slow evaporation of the solvent to maximize crystal size. The purified DNPH crystals are stored under UV grade acetonitrile until use. Impurity levels of carbonyl compounds in the DNPH are determined by HPLC prior to use and should be less than 0.025 ug/mL.

7. Apparatus

7.1 Isocratic HPLC system consisting of a mobile phase reservoir; a high pressure pump; an injection valve (automatic sampler with an optional 25-uL loop injector); a Zorbax ODS (DuPont Instruments, Wilmington, DE), or equivalent C-18, reverse phase (RP) column, or equivalent (25 cm x 4.6 mm ID); a variable wavelength UV detector operating at 360 nm; and a data system or strip chart recorder (Figure 1).

7.2 Sampling system - capable of accurately and precisely sampling 100-1500 mL/min of ambient air (Figure 2). The dry test meter may not be accurate at flows below 500 mL/min, and should then be replaced by recorded flow readings at the start, finish, and hourly during the collection. The sample pump consists of a diaphragm or metal bellows pump capable of extracting an air sample between 500-1200 mL/min. [Note: A normal pressure drop through the sample cartridge approaches 14 cm Hg at a sampling rate of 1.5 L/min.]

7.3 Stopwatch.

7.4 Friction-top metal can (e.g., 1-gallon paint can) or a styrofoam box with polyethlyene-air bubble padding - to hold sample vials.

7.5 Thermometer - to record ambient temperature.

7.6 Barometer (optional).

7.7 Suction filtration apparatus - for filtering HPLC mobile phase.

7.8 Volumetric flasks - various sizes, 5-2000 mL.

7.9 Pipets - various sizes, 1-50 mL.

7.10 Helium purge line (optional) - for degassing HPLC mobile phase.

7.11 Erlenmeyer flask, 1 L - for preparing HPLC mobile phase.

7.12 Graduated cylinder, 1 L - for preparing HPLC mobile phase.

7.13 Syringe, 100-250 uL - for HPLC injection.

7.14 Sample vials.

7.15 Melting point apparatus.

7.16 Rotameters.

7.17 Calibrated syringes.

7.18 Special glass apparatus for rinsing, storing and dispensing saturated DNPH stock reagent (Figure 3).

7.19 Mass flow meters and mass flow controllers for metering/setting air flow rate through sample cartridge of 500-1200 mL/min. [Note: The mass flow controllers are necessary because cartridges have a high pressure drop and at maximum flow rates, the cartridge behaves like a "critical orifice." Recent studies have shown that critical flow orifices may be used for 24-hour sampling periods at a maximum rate of 1 L/min for atmospheres not heavily loaded with particulates without any problems.]

7.20 Positive displacement, repetitive dispensing pipets (Lab-Industries, or equivalent), 0-10 mL range.

7.21 Cartridge drying manifold with multiple standard male Luer® connectors.

7.22 Liquid syringes, 10 mL (polypropylene syringes are adequate) for preparing DNPH-coated cartridges.

7.23 Syringe rack - made of an aluminum plate (0.16 x 36 x 53 cm) with adjustable legs on four corners. A matrix (5 x 9) of circular holes of diameter slightly larger than the diameter of the 10-mL syringes was symetrically drilled from the center of the plate to enable batch processing of 45 cartridges for cleaning, coating, and/or sample elution.

7.24 Luer® fittings/plugs - to connect cartridges to sampling system and to cap prepared cartridges.

7.25 Hot plates, beakers, flasks, measuring and disposable pipets, volumetric flasks, etc. - used in the purification of DNPH.

7.26 Borosilicate glass culture tubes (20 mm x 125 mm) with polypropylene screw caps - used to transport Sep-PAK coated cartridges for field applications (Fisher Scientific, Pittsburgh, PA, or equivalent).

7.27 Heated probe - necessary when ambient temperature to be sampled is below 60°F to insure the effective collection of formaldehyde as a hydrazone.

7.28 Cartridge sampler - prepacked silica gel cartridge, Sep-PAK (Waters Associates, Milford, MA 01757, or equivalent) coated *in situ* with DNPH according to Section 9.

7.29 Polyethylene gloves - used to handle Sep-PAK silica gel cartridges, best source.

8. Reagents and Materials

8.1 2,4-Dinitrophenylhydrazine (DNPH)- Aldrich Chemical or J.T. Baker, reagent grade or equivalent. Recrystallize at least twice with UV grade acetonitrile before use.

8.2 Acetonitrile - UV grade, Burdick and Jackson "distilled-in-glass," or equivalent.

8.3 Deionized-distilled water - charcoal filtered.

8.4 Perchloric acid - analytical grade, best source.

8.5 Hydrochloric acid - analytical grade, best source.

8.6 Formaldehyde - analytical grade, best source.

8.7 Aldehydes and ketones, analytical grade, best source - used for preparation of DNPH derivative standards (optional).

8.8 Ethanol or methanol - analytical grade, best source.

8.9 Sep-PAK silica gel cartridge - Waters Associates, 34 Maple St., Milford, MA, 01757, or equivalent.

8.10 Nitrogen - high purity grade, best source.

8.11 Charcoal - granular, best source.

8.12 Helium - high purity grade, best source.

9. Preparation of Reagents and Cartridges

9.1 Purification of 2,4-Dinitrophenylhydrazine (DNPH)
[Note: This procedure should be performed under a properly ventilated hood.]

9.1.1 Prepare a supersaturated solution of DNPH by boiling excess DNPH in 200 mL of acetonitrile for approximately one hour.

9.1.2 After one hour, remove and transfer the supernatant to a covered beaker on a hot plate and allow gradual cooling to 40-60°C.

9.1.3 Maintain the solution at this temperature (40-60°C) until 95% of solvent has evaporated.

9.1.4 Decant solution to waste, and rinse crystals twice with three times their apparent volume of acetonitrile. [Note: Various health effects are resultant from the inhalation of acetonitrile. At 500 ppm in air, brief inhalation has produced nose and throat irritation. At 160 ppm, inhalation for 4 hours has caused flushing of the face (2 hour delay after exposure) and bronchial tightness (5 hour delay). Heavier exposures have produced systemic effects with symptoms ranging from headache, nausea, and lassitude to vomiting, chest or abdominal pain, respiratory depression, extreme weakness, stupor, convulsions and death (dependent upon concentration and time).]

9.1.5 Transfer crystals to another clean beaker, add 200 mL of acetonitrile, heat to boiling, and again let crystals grow slowly at 40-60°C until 95% of the solvent has evaporated.

9.1.6 Repeat rinsing process as described in Section 9.1.4.

9.1.7 Take an aliquot of the second rinse, dilute 10 times with acetonitrile, acidify with 1 mL of 3.8 M perchloric acid per 100 mL of DNPH solution, and analyze by HPLC.

9.1.8 The chromatogram illustrated in Figure 4 represents an acceptable impurity level of <0.025 ug/mL of formaldehyde in recrystallized DNPH reagent. An acceptable impurity level for an intended sampling application may be defined as the mass of the analyte (e.g. DNPH-formaldehyde derivative) in a unit volume of the reagent solution equivalent to less than one tenth (0.1) the mass of the corresponding analyte from a volume of an air sample when the carbonyl (e.g. formaldehyde) is collected as DNPH derivative in an equal unit volume of the reagent solution. An impurity level unacceptable for a typical 10 L sample volume may be acceptable if sample volume is increased to 100 L. The impurity level of DNPH should be below the sensitivity (ppb, v/v) level indicated in Table 1 for the anticipated sample volume. If the impurity level is not acceptable for intended sampling application, repeat recrystallization. A special glass apparatus should be used for the final rinse and storage according to the following procedure:

9.1.8.1 Transfer the crystals to the special glass apparatus (Figure 3).

9.1.8.2 Add about 25 mL of acetonitrile, agitate gently, and let solution equilibrate for 10 minutes.

9.1.8.3 Drain the solution by properly positioning the three-way stopcock. [Note: The purified crystals should not be allowed to contact laboratory air except for a brief moment. This is accomplished by using the DNPH-coated silica cartridge on the gas inlet of the special glass apparatus.]

9.1.8.4 After draining, turn stopcock so drain tube is connected to measuring reservoir.

9.1.8.5 Introduce acetonitrile through measuring reservoir.

9.1.8.6 Rinsing should be repeated with 20-mL portions of acetonitrile until a satisfactorily low impurity level in the supernatant is confirmed by HPLC analysis. An impurity level of <0.025 ug/mL formaldehyde should be achieved, as illustrated in Figure 4.

9.1.9 If special glass apparatus is not available, transfer the purified crystals to an all-glass reagent bottle, add 200 mL of acetonitrile, stopper, shake gently, and let stand overnight. Analyze supernatant by HPLC according to Section 11. The impurity level should be comparable to that shown in Figure 4.

9.1.10 If the impurity level is not satisfactory, pipet off the solution to waste, then add 25 mL of acetonitrile to the purified crystals. Repeat Section 9.1.8.6.

9.1.11 If the impurity level is satisfactory, add another 25 mL of acetonitrile, stopper and shake the reagent bottle, then set aside. The saturated solution above the purified crystals is the stock DNPH reagent.

9.1.12 After purification, purity of the DNPH reagent can be maintained by storing in the special glass apparatus.

9.1.13 Maintain only a minimum volume of saturated solution adequate for day to day operation. This will minimize wastage

of purified reagent should it ever become necessary to rerinse the crystals to decrease the level of impurity for applications requiring more stringent purity specifications.

9.1.14 Use clean pipets when removing saturated DNPH stock solution for any analytical applications. Do not pour the stock solution from the reagent bottle.

9.2 Preparation of DNPH-Formaldehyde Derivative

9.2.1 Titrate a saturated solution of DNPH in 2N HCl with formaldehyde (other aldehydes or ketones may be used if their detection is desirable).

9.2.2 Filter the colored precipitate, wash with 2N HCl and water and let precipitate air dry.

9.2.3 Check the purity of the DNPH-formaldehyde derivative by melting point determination table or HPLC analysis. If the impurity level is not acceptable, recrystallize the derivative in ethanol. Repeat purity check and recrystallization as necessary until acceptable level of purity (e.g. 99%) is achieved.

9.3 Preparation of DNPH-Formaldehyde Standards

9.3.1 Prepare a standard stock solution of the DNPH-formaldehyde derivative by dissolving accurately weighed amounts in acetonitrile.

9.3.2 Prepare a working calibration standard mix from the standard stock solution. The concentration of the DNPH-formaldehyde compound in the standard mix solutions should be adjusted to reflect relative distribution in a real sample. [Note: Individual stock solutions of approximately 100 mg/L are prepared by dissolving 10 mg of the solid derivative in 100 mL of acetonitrile. The individual solution is used to prepare calibration standards containing the derivative of interest at concentrations of 0.5-20 ug/L, which spans the concentration of interest for most ambient air work.]

9.3.3 Store all standard solutions in a refrigerator. They should be stable for several months.

9.4 Preparation of DNPH-Coated Sep-PAK Cartridges

[Note: This procedure must be performed in an atmosphere with a very low aldehyde background. All glassware and plastic ware must be scrupulously cleaned and rinsed with deionized water and aldehyde free acetonitrile. Contact of reagents with laboratory air must be minimized. Polyethylene gloves must be worn when handling the cartridges.]

9.4.1 DNPH Coating Solution

9.4.1.1 Pipet 30 mL of saturated DNPH stock solution to a 1000 mL volumetric flask then add 500 mL acetonitrile.

9.4.1.2 Acidify with 1.0 mL of concentrated HCl. [Note: The atmosphere above the acidified solution should preferably be filtered through a DNPH-coated silica gel cartridge to minimize contamination from laboratory air.] Shake solution then make up to volume with acetonitrile. Stopper the flask, invert and shake several times until the solution is homogeneous. Transfer the acidified solution to a reagent bottle with a 0-10 mL range positive displacement dispenser.

9.4.1.3 Prime the dispenser and slowly dispense 10-20 mL to waste.

9.4.1.4 Dispense an aliquot solution to a sample vial, and check the impurity level of the acidified solution by HPLC according to Section 9.1 and illustrated in Figure 4.

9.4.1.5 The impurity level should be <0.025 ug/mL formaldehyde similar to that in the DNPH coating solution.

9.4.2 Coating of Sep-PAK Cartridges

9.4.2.1 Open the Sep-PAK package, connect the short end to a 10-mL syringe, and place it in the syringe rack. [Note: Prepare as many cartridges and syringes as possible.]

9.4.2.2 Using a positive displacement repetitive pipet, add 10 mL of acetonitrile to each of the syringes.

9.4.2.3 Let liquid drain to waste by gravity. [Note: Remove any air bubbles that may be trapped between the syringe and the silica cartridge by displacing them with the acetonitrile in the syringe.]

9.4.2.4 Set the repetitive dispenser containing the acidified DNPH coating solution to dispense 7 mL into the cartridges.

9.4.2.5 Once the effluent flow at the outlet of the cartridge has stopped, dispense 7 mL of the coating reagent into each of the syringes.

9.4.2.6 Let the coating reagent drain by gravity through the cartridge until flow at the other end of the cartridge stops.

9.4.2.7 Wipe the excess liquid at the outlet of each of the cartridges with clean tissue paper.

9.4.2.8 Assemble a drying manifold with a scrubber or "guard cartridge" connected to each of the exit ports. These "guard cartridges" are DNPH-coated and serve to remove any trace of formaldehyde in the nitrogen gas supply.

9.4.2.9 Remove the cartridges from the syringes and connect the short ends to the exit end of the scrubber cartridge.

9.4.2.10 Pass nitrogen through each of the cartridges at about 300-400 mL/min for 5-10 minutes.

9.4.2.11 Within 10 minutes of the drying process, rinse the exterior surfaces and outlet ends of the cartridges with acetonitrile using a Pasteur pipet.

9.4.2.12 Stop the flow of nitrogen after 15 minutes and insert cartridge connectors (flared at both ends 0.25 OD x 1 in Teflon FEP tubing with ID slightly smaller than the OD of the cartridge port) to the long end of the scrubber cartridges.

9.4.2.13 Connect the short ends of a batch of the coated cartridges to the scrubbers and pass nitrogen at about 300-400 mL/min.

9.4.2.14 Follow procedure in Section 9.4.2.11.

9.4.2.15 After 15 minutes, stop the flow of nitrogen, remove the dried cartridges and wipe the cartridge exterior free of rinse acetonitrile.

9.4.2.16 Plug both ends of the coated cartridge with standard polypropylene Luer® male plugs, place the plugged cartridge in a borosilicate glass culture tube with polypropylene screw caps.

9.4.2.17 Put a serial number and a lot number label on each of the individual cartridge glass storage container and store the prepared lot in the refrigerator until use.

9.4.2.18 Store cartridges in an all-glass stoppered reagent bottle in a refrigerator until use. [Note: Plugged cartridges could also be placed in screw-capped glass culture tubes and placed in a refrigerator until use.] Cartridges will maintain their integrity for up to 90 days stored in refrigerated, capped culture tubes.

9.4.2.19 Before transport, remove the glass-stoppered reagent bottles (or screw-capped glass culture tubes) containing the adsorbent tubes from the refrigerator and place the tubes individually in labeled glass culture tubes. Place culture tubes in a friction-top metal can containing 1-2 inches of charcoal for shipment to sampling location.

9.4.2.20 As an alternative to friction-top cans for transporting sample cartridges, the coated cartridges could be shipped in their individual glass containers. A big batch of coated cartridges in individual glass containers may be packed in a styrofoam box for shipment to the field. The box should be padded with clean tissue paper or polyethylene-air bubble padding. Do not use polyurethane foam or newspaper as padding material.

9.4.2.21 The cartridges should be immediately stored in a refrigerator upon arrival in the field.

10. Sampling

10.1 The sampling system is assembled and should be similar to that shown in Figure 2. [Note: Figure 2(a) illustrates a three tube/one pump configuration. The tester should ensure that the pump is capable of constant flow rate throughout the sampling period.] The coated cartridges can be used as direct probes and traps for sampling ambient air when the temperature is above freezing. [Note: For sampling ambient air below freezing, a short length (30-60 cm) of heated (50-60°C) stainless steel tubing must be added to condition the air sample prior to collection on adsorbent tubes.] Two types of sampling systems are shown in Figure 2. For purposes of discussion, the following procedure assumes the use of a dry test meter. [Note: The dry test meter may not be accurate at flows below 500 mL/min and should be backed up by recorded flow readings at the start, finish, and hourly intervals during sample collection.]

10.2 Before sample collection, the system is checked for leaks. Plug the input end of the cartridge so no flow is indicated at the output end of the pump. The mass flow meter should not indicate any air flow through the sampling apparatus.

10.3 The entire assembly (including a "dummy" sampling cartridge) is installed and the flow rate checked at a value near the desired rate. In general, flow rates of 500-1200 mL/min should be employed. The total moles of carbonyl in the volume of air sampled should not exceed that of the DNPH concentration (2 mg/cartridge). In general, a safe estimate of the sample size should be 75% of the DNPH loading of the cartridge. Generally, calibration is accomplished using a soap bubble flow meter or calibrated wet test meter connected to the flow exit, assuming the system is sealed. [Note: ASTM Method 3686 describes an appropriate calibration scheme that does not require a sealed flow system downstream of the pump.]

10.4 Ideally, a dry gas meter is included in the system to record total flow. If a dry gas meter is not available, the operator must measure and record the sampling flow rate at the beginning and end of the sampling period to determine sample volume. If the sampling period exceeds two hours, the flow rate should be measured at intermediate points during the sampling period. Ideally, a rotameter should be included to allow observation of the flow rate without interruption of the sampling process.

10.5 Before sampling, remove the glass culture tube from the friction-top metal can or styrofoam box. Let the cartridge warm to ambient temperature in the glass tube before connecting it to the sample train.

10.6 Using polyethylene gloves, remove the coated cartridge from the glass tube and connect it to the sampling system with a Luer® adapter fitting. Seal the glass tube for later use, and connect the cartridge to the sampling train so that its short end becomes the sample inlet. Record the following parameters on the sampling data sheet (Figure 5): date, sampling location, time, ambient temperature, barometric pressure (if available), relative humidity (if available), dry gas meter reading (if appropriate), flow rate, rotameter setting, cartridge batch number, and dry gas meter pump identification numbers.

10.7 The sampler is turned on and the flow is adjusted to the desired rate. A typical flow rate through one cartridge is 1.0 L/min and 0.8 L/min for two tandem cartridges.

10.8 The sampler is operated for the desired period, with periodic recording of the variables listed above.

10.9 At the end of the sampling period, the parameters listed in Section 10.6 are recorded and the sample flow is stopped. If a dry gas meter is not used, the flow rate must be checked at the end of the sampling interval. If the flow rates at the beginning and end of the sampling period differ by more than 15%, the sample should be marked as suspect.

10.10 Immediately after sampling, remove the cartridge (using polyethylene gloves) from the sampling system, cap with Luer® end plugs, and place it back in the original labeled glass culture tube. Cap the culture tube, seal it with Teflon® tape, and place it in a friction-top can containing 1-2 inches of granular charcoal or styrofoam box with appropriate padding. Refrigerate the the culture tubes until analysis. Refrigeration period prior to analysis should not exceed 30 days. [Note: If samples are to be shipped to a central laboratory for analysis, the duration of the non-refrigerated period should be kept to a minimum, preferably less than two days.]

10.11 If a dry gas meter or equivalent total flow indicator is not used, the average sample flow rate must be calculated according to the following equation:

$$Q_A = \frac{Q_1 + Q_2 + \ldots Q_N}{N}$$

where:

Q_A = average flow rate (mL/min).

$Q_1, Q_2, \ldots Q_N$ = flow rates determined at beginning, end, and intermediate points during sampling.

N = number of points averaged.

10.12 The total flow rate is then calculated using the following equation:

$$V_m = \frac{(T_2 - T_1) \times Q_A}{1000}$$

where:

V_m = total volume (L) sampled at measured temperature and pressure.

T_2 = stop time (minutes).

T_1 = start time (minutes).

$T_2 - T_1$ = total sampling time (minutes).

Q_A = average flow rate (mL/min).

10.13 The total volume (V_s) at standard conditions, 25°C and 760 mm Hg, is calculated from the following equation:

$$V_s = V_m \times \frac{\overline{P}_A}{760} \times \frac{298}{273 + \overline{t}_A}$$

where:

V_s = total sample volume (L) at 25°C and 760 mm Hg pressure.
V_m = total sample volume (L) at measured temperature and pressure.
$\overline{P}_A$ = average ambient pressure (mm Hg).
$\overline{t}_A$ = average ambient temperature (°C).

11. Sample Analysis

11.1 Sample Preparation

11.1.1 The samples are returned to the laboratory in a friction-top can containing 1-2 inches of granular charcoal and stored in a refrigerator until analysis. Alternatively, the samples may also be stored alone in their individual glass containers. The time between sampling and analysis should not exceed 30 days.

11.2 Sample Desorption

11.2.1 Remove the sample cartridge form the labeled culture tube. Connect the sample cartridge (outlet end during sampling) to a clean syringe. [Note: The liquid flow during desorption should be in the reverse direction of air flow during sample collection.]

11.2.2 Place the cartridge/syringe in the syringe rack.

11.2.3 Backflush the cartridge (gravity feed) by passing 6 mL of acetonitrile from the syringe through the cartridge to a graduated test tube or to a 5-mL volumetric flask. [Note: A dry cartridge has an acetonitrile holdup volume slightly greater than 1 mL. The eluate flow may stop before the acetonitrile in the syringe is completely drained into the cartridge because of air trapped between the cartridge filter and the syringe Luer® tip. If this happens, displace the trapped air with the acetronitrile in the syringe using a long-tip disposable Pasteur pipet.]

11.2.4 Dilute to the 5-mL mark with acetonitrile. Label the flask with sample identification. Pipet two aliquots into sample vials with Teflon-lined septa. Analyze the first aliquot for the derivative carbonyls by HPLC. Store the second aliquot in the refrigerator until sample analysis.

11.3 HPLC Analysis

11.3.1 The HPLC system is assembled and calibrated as described in Section 11.4. The operating parameters are as follows:

Column:	Zorbax ODS (4.6 mm ID x 25 cm), or equivalent.
Mobile Phase:	60% acetonitrile/40% water, isocratic.
Detector:	ultraviolet, operating at 360 nm.
Flow Rate:	1.0 mL/min.
Retention Time:	7 minutes for formaldehyde with one Zorbax ODS column. 13 minutes for formaldehyde with two Zorbax ODS columns.
Sample Injection Volume:	25 uL.

Before each analysis, the detector baseline is checked to ensure stable conditions.

11.3.2 The HPLC mobile phase is prepared by mixing 600 mL of acetonitrile and 400 mL of water. This mixture is filtered through a 0.22-um polyester membrane filter in an all-glass and Teflon® suction filtration apparatus. The filtered mobile phase is degassed by purging with helium for 10-15 minutes (100 mL/min) or by heating to 60°C for 5-10 minutes in an Erlenmeyer flask covered with a watch glass. A constant back pressure restrictor (350 kPa) or short length (15-30 cm) of 0.25 mm (0.01 inch) ID Teflon® tubing should be placed after the detector to eliminate further mobile phase outgassing.

11.3.3 The mobile phase is placed in the HPLC solvent reservoir and the pump is set at a flow rate of 1.0 mL/min and

allowed to pump for 20-30 minutes before the first analysis. The detector is switched on at least 30 minutes before the first analysis, and the detector output is displayed on a strip chart recorder or similar output device.

11.3.4 A 100-uL aliquot of the sample is drawn into a clean HPLC injection syringe. The sample injection loop (25 uL) is loaded and an injection is made. The data system, if available, is activated simultaneously with the injection, and the point of injection is marked on the strip chart recorder.

11.3.5 After approximately one minute, the injection valve is returned to the "inject" position and the syringe and valve are rinsed or flushed with acetonitrile/water mixture in preparation for the next sample analysis. [Note: The flush/rinse solvent should not pass through the sample loop during flushing.] The loop is clean while the valve is in the "inject" mode.

11.3.6 After elution of the DNPH-formaldehyde derivative (Figure 6), data acquisition is terminated and the component concentrations are calculated as described in Section 12.

11.3.7 After a stable baseline is achieved, the system can be used for further sample analyses as described above. [Note: After several cartridge analyses, buildup on the column may be removed by flushing with several column volumes of 100% acetonitrile.]

11.3.8 If the concentration of analyte exceeds the linear range of the instrument, the sample should be diluted with mobile phase, or a smaller volume can be injected into the HPLC.

11.3.9 If the retention time is not duplicated (±10%), as determined by the calibration curve, the acetonitrile/water ratio may be increased or decreased to obtain the correct elution time. If the elution time is too long, increase

the ratio; if it is too short, decrease the ratio. [Note: The chromatographic conditions described here have been optimized for the detection of formaldehyde. Analysts are advised to experiment with their HPLC system to optimize chromatographic conditions for their particular analytical needs.]

11.4 HPLC Calibration

11.4.1 Calibration standards are prepared in acetonitrile from the DNPH-formaldehyde derivative. Individual stock solutions of 100 mg/L are prepared by dissolving 10 mg of solid derivative in 100 mL of mobile phase. These individual solutions are used to prepare calibration standards at concentrations spanning the range of interest.

11.4.2 Each calibration standard (at least five levels) is analyzed three times and area response is tabulated against mass injected (Figure 7). All calibration runs are performed as described for sample analyses in Section 11.3. Using the UV detector, a linear response range of approximately 0.05-20 ug/L should be achieved for 25-uL injection volumes. The results may be used to prepare a calibration curve, as illustrated in Figure 8. Linear response is indicated where a correlation coefficient of at least 0.999 for a linear least-squares fit of the data (concentration versus area response) is obtained. The retention times for each analyte should agree within 2%.

11.4.3 Once linear response has been documented, an intermediate concentration standard near the anticipated levels of each component, but at least 10 times the detection limit, should be chosen for daily calibration. The day to day response for the various components should be within 10% for analyte concentrations 1 ug/mL or greater and within 15-20% for analyte concentrations near 0.5 ug/mL. If greater variability is observed, recalibration may be required or a new calibration curve must be developed from fresh standards.

11.4.4 The response for each component in the daily calibration standard is used to calculate a response factor according to the following equation:

$$RF_c = \frac{C_c \times V_I}{R_c}$$

where:

RF_c = response factor (usually area counts) for the component of interest in nanograms injected/response unit.

C_c = concentration (mg/L) of analyte in the daily calibration standard.

V_I = volume (uL) of calibration standard injected.

R_c = response (area counts) for analyte in the calibration standard.

12. Calculations

12.1 The total mass of analyte (DNPH-formaldehyde) is calculated for each sample using the following equation:

$$W_d = RF_c \times R_d \times V_E/V_I$$

where:

W_d = total quantity of analyte (ug) in the sample.

RF_c = response factor calculated in Section 11.4.4.

R_d = response (area counts or other response units) for analyte in sample extract, blank corrected.

= $[(A_s)(V_D/V_A) - (A_b)(V_b/V_s)]$

where:

A_s = area counts, sample.

A_b = area counts, blank.

V_b = volume (mL), blank.

V_s = volume (mL), sample.

V_E = final volume (mL) of sample extract.

V_I = volume of extract (uL) injected into the HPLC system.

V_D = redilution volume (if sample was rediluted).

V_A = aliquot used for redilution (if sample was rediluted).

12.2 The concentration of formaldehyde in the original sample is calculated from the following equation:

$$C_A = \frac{W_d}{V_m \text{ (or } V_s)} \times 1000$$

where:

C_A = concentration of analyte (ng/L) in the original sample.

W_d = total quantity of analyte (ug) in sample, blank corrected.

V_m = total sample volume (L) under ambient conditions.

V_s = total sample volume (L) at 25°C and 760 mm Hg.

The analyte concentrations can be converted to ppbv using the following equation:

$$C_A \text{ (ppbv)} = C_A \text{ (ng/L)} \times \frac{24.4}{MW_A}$$

where:

C_A(ppbv) = Concentration of analyte in parts per billion by volume.

C_A (ng/L) is calculated using V_s.

MW_A = molecular weight of analyte.

13. Performance Criteria and Quality Assurance

This section summarizes required quality assurance measures and provides guidance concerning performance criteria that should be achieved within each laboratory.

13.1 Standard Operating Procedures (SOPs).

13.1.1 Users should generate SOPs describing the following activities in their laboratory: (1) assembly, calibration, and operation of the sampling system, with make and model of equipment used; (2) preparation,

purification, storage, and handling of sampling reagent and samples; (3) assembly, calibration, and operation of the HPLC system, with make and model of equipment used; and (4) all aspects of data recording and processing, including lists of computer hardware and software used.

13.1.2 SOPs should provide specific stepwise instructions and should be readily available to and understood by the laboratory personnel conducting the work.

13.2 HPLC System Performance

13.2.1 The general appearance of the HPLC system should be similar to that illustrated in Figure 1.

13.2.2 HPLC system efficiency is calculated according to the following equation:

$$N = 5.54 \left(\frac{t_r}{W_{1/2}} \right)^2$$

where:

N = column efficiency (theoretical plates).
t_r = retention time (seconds) of analyte.
$W_{1/2}$ = width of component peak at half height (seconds).

A column efficiency of >5,000 theoretical plates should be obtained.

13.2.3 Precision of response for replicate HPLC injections should be ±10% or less, day to day, for analyte calibration standards at 1 ug/mL or greater levels. At 0.5 ug/mL level and below, precision of replicate analyses could vary up to 25%. Precision of retention times should be ±2% on a given day.

13.3 Process Blanks

13.3.1 At least one field blank or 10% of the field samples, whichever is larger, should be shipped and analyzed with each group of samples. The number of samples within a

group and/or time frame should be recorded so that a specified percentage of blanks is obtained for a given number of field samples. The field blank is treated identically to the samples except that no air is drawn through the cartridge. The performance criteria described in Section 9.1 should be met for process blanks.

13.4 Method Precision and Accuracy

13.4.1 At least one duplicate sample or 10% of the field samples, whichever is larger, should be collected during each sampling episode. Precision for field replication should be ±20% or better.

13.4.2 Precision for replicate HPLC injections should be ±10% or better, day to day, for calibration standards.

13.4.3 At least one sample spike with analyte of interest or 10% of the field samples, whichever is larger, should be collected.

13.4.4 Before initial use of the method, each laboratory should generate triplicate spiked samples at a minimum of three concentration levels, bracketing the range of interest for each compound. Triplicate nonspiked samples must also be processed. Spike recoveries of >80 ± 10% and blank levels as outlined in Section 9.1 should be achieved.

14. Detection of other Aldehydes and Ketones

[Note: The procedure outlined above has been written specifically for the sampling and analysis of formaldehyde in ambient air using an adsorbent cartridge and HPLC. Ambient air contains other aldehydes and ketones. Optimizing chromatographic conditions by using two Zorbax ODS columns in series and varying the mobile phase composition through a gradient program will enable the analysis of other aldehydes and ketones.]

14.1 Sampling Procedures

Same as Section 10.

14.2 HPLC Analysis

14.2.1 The HPLC system is assembled and calibrated as described in Section 11. The operating parameters are as follows:

Column:	Zorbax ODS, two columns in series
Mobile Phase:	Acetonitrile/water, linear gradient
Step 1.	60-75% acetonitrile/40-25% water in 30 minutes.
Step 2.	75-100% acetonitrile/25-0% water in 20 minutes.
Step 3.	100% acetonitrile for 5 minutes.
Step 4.	60% acetonitrile/40% water reverse gradient in 1 minute.
Step 5.	60% acetonitrile/40% water, isocratic, for 15 minutes.
Detector:	Ultraviolet, operating at 360 nm
Flow Rate:	1.0 mL/min
Sample Injection Volume:	25 uL

14.2.2 The gradient program allows for optimization of chromatographic conditions to separate acrolein, acetone, propionaldehyde, and other higher molecular weight aldehydes and ketones in an analysis time of about one hour. Table 1 illustrates the sensitivity for selective aldehydes and ketones that have been identified using two Zorbax ODS columns in series.

14.2.3 The chromatographic conditions described here have been optimized for a gradient HPLC (Varian Model 5000) system equipped with a UV detector (ISCO Model 1840 variable wavelength), an automatic sampler with a 25-uL loop injector and two DuPont Zorbax ODS columns (4.6 x 250 mm), a recorder, and an electronic integrator. Analysts are advised to experiment with their HPLC systems to optimize chromatographic conditions for their particular analytical needs. Highest chromatographic resolution and sensitivity are desirable but may not be achieved.

The separation of acrolein, acetone, and propionaldehyde should be a minimum goal of the optimization.

14.2.4 The carbonyl compounds in the sample are identified and quantified by comparing their retention times and area counts with those of standard DNPH derivatives. Formaldehyde, acetaldehyde, acetone, propionaldehyde, crotonaldehyde, benzaldehyde, and o-, m-, p-tolualdehydes can be identified with a high degree of confidence. The identification of butyraldehyde is less certain because it coelutes with isobutyraldehyde and methyl ethyl ketone under the stated chromatographic conditions. Figure 10 illustrates a typical chromatogram obtained with the gradient HPLC system.

14.2.5 The concentrations of individual carbonyl compounds are determined as outlined in Section 12.

14.2.6 Performance criteria and quality assurance activities should meet those requirements outlined in Section 13.

REFERENCES

1. Silvestre B. Tejada, "Standard Operating Procedure For DNPH-coated Silica Cartridges For Sampling Carbonyl Compounds In Air And Analysis by High-performance Liquid Chromatography," Unpublished, U.S. Environmental Protection Agency, Research Triangle Park, NC, March 1986.

2. Silvestre B. Tejada, "Evaluation of Silica Gel Cartridges Coated in situ with Acidified 2,4-Dinitrophenylhydrazine for Sampling Aldehydes and Ketones in Air", Intern. J. Environ. Anal. Chem., 26:167-185, 1986.

3. Quality Assurance Handbook for Air Pollution Measurement Systems, Volume II - Ambient Air Specific Methods, EPA-600/4-77-027A, U. S. Environmental Protection Agency, Research Triangle Park, NC, July 1979.

4. J. O. Levin, et al., "Determination of Sub-part-per-Million Levels of Formaldehyde in Air Using Active or Passive Sampling on 2,4-Dinitrophenylhydrazine-Coated Glass Fiber Filters and High-Performance Liquid Chromatography", Anal. Chem., 57:1032-1035, 1985.

5. Compendium of Methods for the Determination of Toxic Organic Compounds in Ambient Air, EPA-600/4-84-041, U.S. Environmental Protection Agency, Research Triangle Park, NC, April 1984.

6. J. E. Sigsby, Jr., et al., unpublished report on volatile organic compound emissions from 46 in-use passenger cars, U.S. Environmental Protection Agency, Research Triangle Park, NC, 1984.

7. S. B. Tejada and W. D. Ray, unpublished results of study of aldehyde concentration in indoor atmosphere of some residential homes, U.S. Environmental Protection Agency, Research Triangle Park, NC, 1982.

8. J. M. Perez, F. Lipari, and D. E. Seizinger, "Cooperative Development of Analytical Methods for Diesel Emissions and Particulates - Solvent Extractions, Aldehydes and Sulfate Methods", presented at the Society of Automotive Engineers International Congress and Exposition, Detroit, MI, February-March 1984.

9. R. M. Riggin, Technical Assistance Document for Sampling and Analysis of Toxic Organic Compounds in Ambient Air, EPA-600/4-83-027, U.S. Environmental Protection Agency, Research Triangle Park, NC, June 1983.

10. E. V. Kring, et al., "Sampling for Formaldehyde in Workplace and Ambient Air Environments - Additional Laboratory Validation and Field Verification of a Passive Air Monitoring Device Compared with Conventional Sampling Methods", J. Am. Ind. Hyg. Assoc., 45:318-324, 1984.

11. I. Ahonen, E. Priha, and M-L Aijala, "Specificity of Analytical Methods Used to Determine the Concentration of Formaldehyde in Workroom Air", Chemosphere, 13:521-525, 1984.

12. J.J. Bufalini and K.L. Brubaker, "The Photooxidation of Formaldehyde at Low Pressures." In: Chemical Reaction in Urban Atmospheres, (ed. C.S. Tuesday), (American Elsevier Publishing Co., New York, 1971), pp. 225-240.

13. A.P. Altshuller and I.R. Cohen, Science 7, 1043 (1963).

14. Committee on Aldehydes, Board of Toxicology and Environmental Hazards, National Research Council, "Formaldehyde and Other Aldehydes" (National Academy Press, Washington, DC, 1981).

TABLE 1. SENSITIVITY (PPB,V/V) OF SAMPLING/ANALYSIS FOR ALDEHYDES AND KETONES IN AMBIENT AIR USING ADSORBENT CARTRIDGE FOLLOWED BY GRADIENT HIGH PERFORMANCE LIQUID CHROMATOGRAPHY

Sample Volume, L	10	20	30	40	50	60	100	200	300	400	500	1000
Compound	Sensitivity (ppb, v/v) of DNPH/HPLC Method							Carbonyls in Ambient Air				
Formaldehyde	1.45	0.73	0.48	0.36	0.29	0.24	0.15	0.07	0.05	0.04	0.03	0.01
Acetaldehyde	1.36	0.68	0.45	0.34	0.27	0.23	0.14	0.07	0.05	0.03	0.03	0.01
Acrolein	1.29	0.65	0.43	0.32	0.26	0.22	0.13	0.06	0.04	0.03	0.03	0.01
Acetone	1.28	0.64	0.43	0.32	0.26	0.21	0.13	0.06	0.04	0.03	0.03	0.01
Propionaldehyde	1.28	0.64	0.43	0.32	0.26	0.21	0.13	0.06	0.04	0.03	0.03	0.01
Crotonaldehyde	1.22	0.61	0.41	0.31	0.24	0.20	0.12	0.06	0.04	0.03	0.02	0.01
Butyraldehyde	1.21	0.61	0.40	0.30	0.24	0.20	0.12	0.06	0.04	0.03	0.02	0.01
Benzaldehyde	1.07	0.53	0.36	0.27	0.21	0.18	0.11	0.05	0.04	0.03	0.02	0.01
Isovaleraldehyde	1.15	0.57	0.38	0.29	0.23	0.19	0.11	0.06	0.04	0.03	0.02	0.01
Valeraldehyde	1.15	0.57	0.38	0.29	0.23	0.19	0.11	0.06	0.04	0.03	0.02	0.01
o-tolualdehyde	1.02	0.51	0.34	0.25	0.20	0.17	0.10	0.05	0.03	0.03	0.02	0.01
m-tolualdehyde	1.02	0.51	0.34	0.25	0.20	0.17	0.10	0.05	0.03	0.03	0.02	0.01
p-tolualdehyde	1.02	0.51	0.34	0.25	0.20	0.17	0.10	0.05	0.03	0.03	0.02	0.01
Hexanaldehyde	1.09	0.55	0.36	0.27	0.22	0.18	0.11	0.05	0.04	0.03	0.02	0.01
2,5-Dimethylbenzaldehyde	0.97	0.49	0.32	0.24	0.19	0.16	0.10	0.05	0.03	0.02	0.02	0.01

[Note: Ppb values are measured at 1 atm and 25°C; sample cartridge is eluted with 5 mL acetonitrile, and 25 mL are injected onto HPLC column.]

[Note: Maximum sampling flow through a DNPH-coated SEP-PAK is about 1.5 L per minute.]

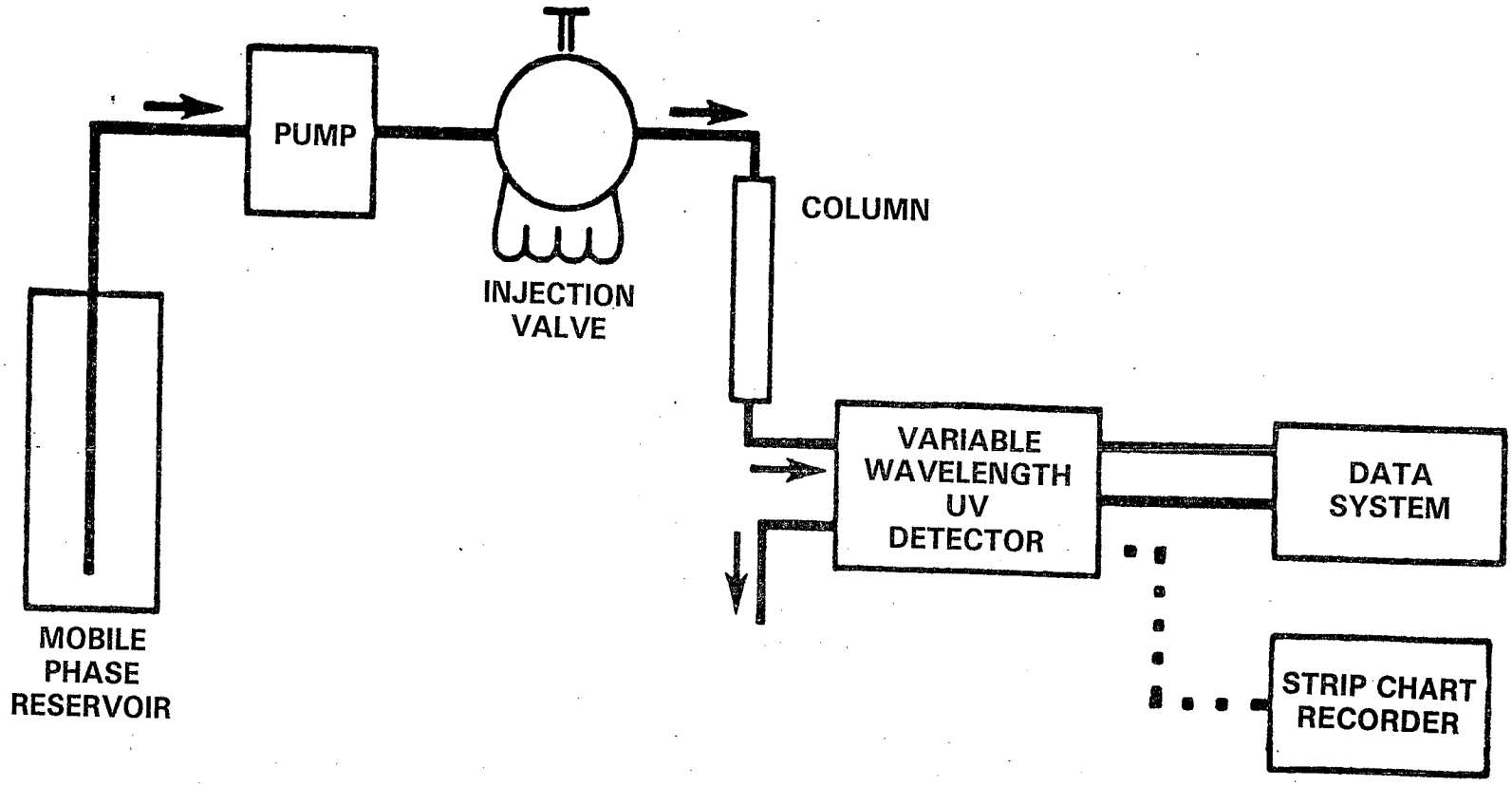

FIGURE 1. TYPICAL HPLC SYSTEM

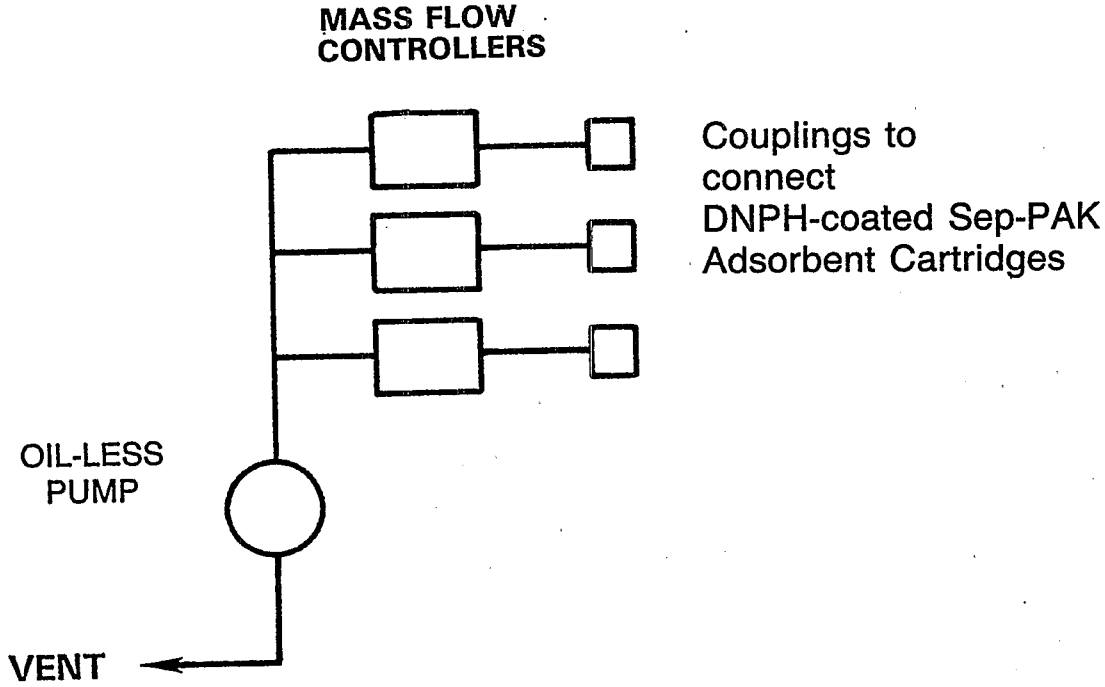

(a) MASS FLOW CONTROL

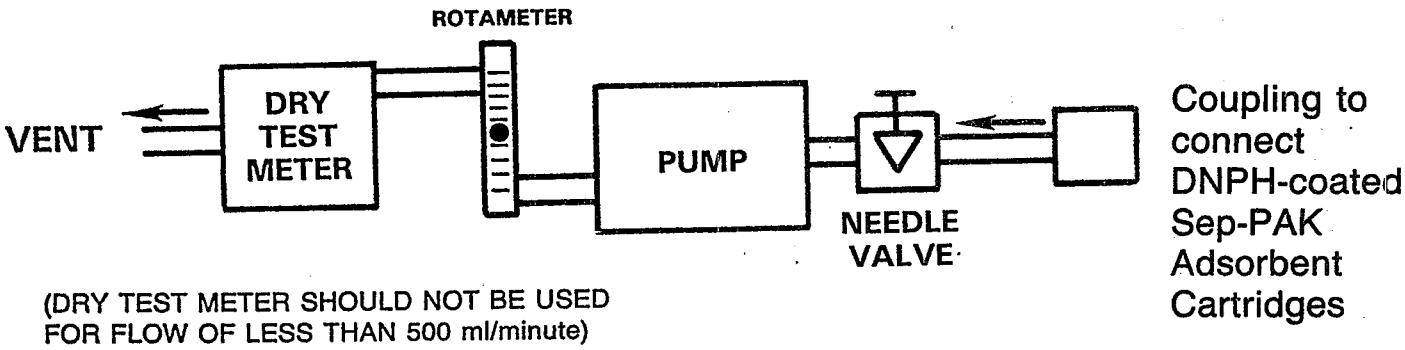

(b) NEEDLE VALVE/DRY TEST METER

FIGURE 2. TYPICAL SAMPLING SYSTEM CONFIGURATIONS

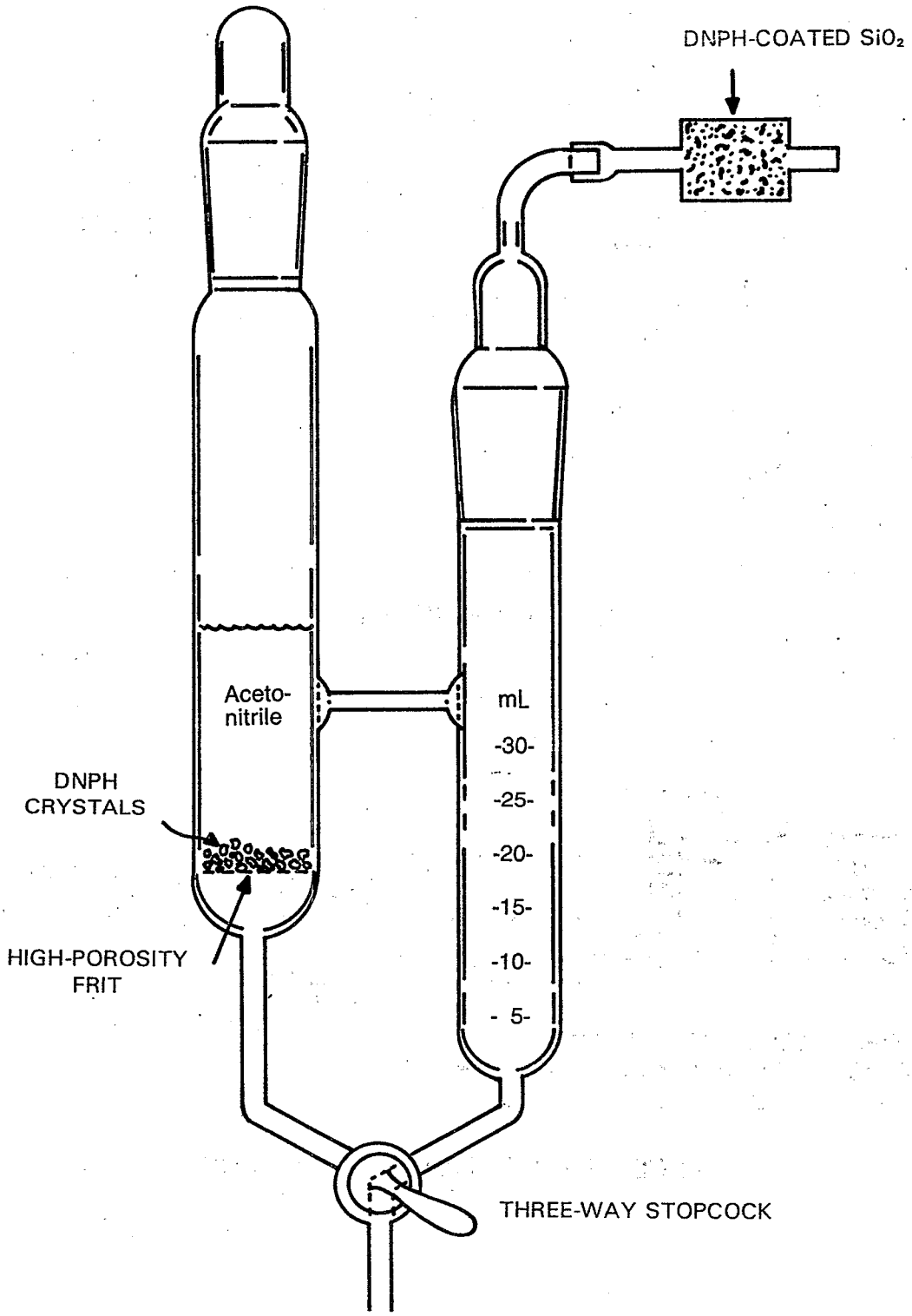

FIGURE 3. SPECIAL GLASS APPARATUS FOR RINSING, STORING, AND DISPENSING SATURATED DNPH STOCK SOLUTION

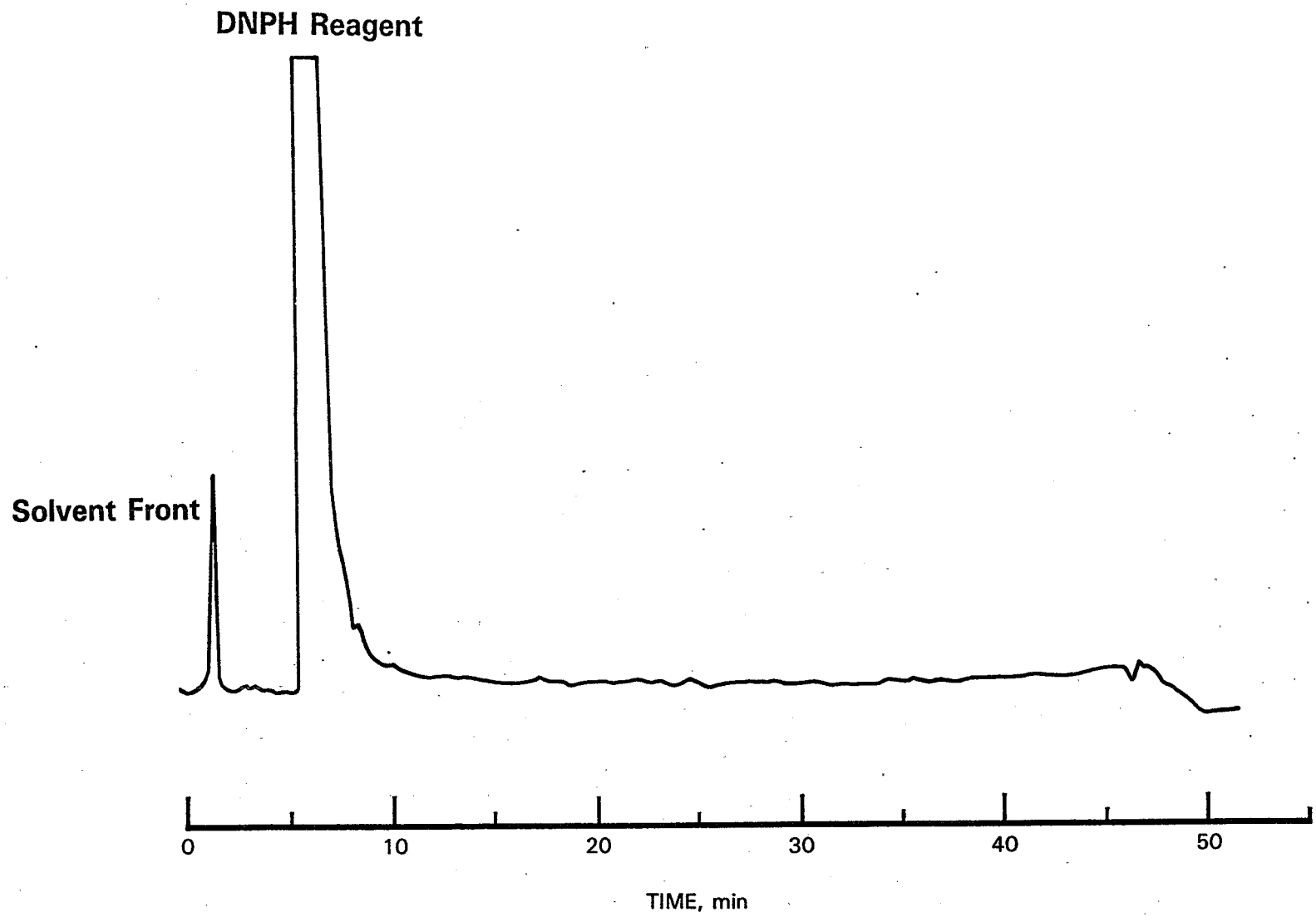

FIGURE 4. IMPURITY LEVEL OF DNPH AFTER RECRYSTALLIZATION

SAMPLING DATA SHEET
(One Sample per Data Sheet)

PROJECT: _____ DATE(S) SAMPLED: _____

SITE: _____ TIME PERIOD SAMPLED: _____

LOCATION: _____ OPERATOR: _____

INSTRUMENT MODEL NO: _____ CALIBRATED BY: _____

PUMP SERIAL NO: _____

ADSORBENT CARTRIDGE INFORMATION:
Type: _____ Serial Number: _____
Adsorbent: _____ Sample Number: _____

SAMPLING DATA:

Start Time: _____ Stop Time: _____

Time	Dry Gas Meter Reading	Rotameter Reading	Flow Rate (Q)*, mL/min	Ambient Temperature, °C	Barometric Pressure, mm Hg	Relative Humidity,%	Comments
Avg.							

* Flow rate from rotameter or soap bubble calibrator (specify which)

Total Volume Data (V_m) (use data from dry gas meter, if available)

V_m = (Final - Initial) Dry Gas Meter Reading, or = _____ Liters

or

$$V_m = \frac{Q_1 + Q_2 + Q_3 \ldots Q_N}{N} \times \frac{1}{1000 \times (\text{Sampling Time in Minutes})} = _____ \text{ Liters}$$

FIGURE 5. EXAMPLE SAMPLING DATA SHEET

OPERATING PARAMETERS
HPLC

Column: Zorbax ODS or C-18 RP
Mobile Phase: 60% Acetonitrile/40% Water
Detector: Ultraviolet, operating at 360 nm
Flow Rate: 1 mL/min.
Retention Time: ~ 7 minutes for formaldehyde
Sample Injection Volume: 25 uL

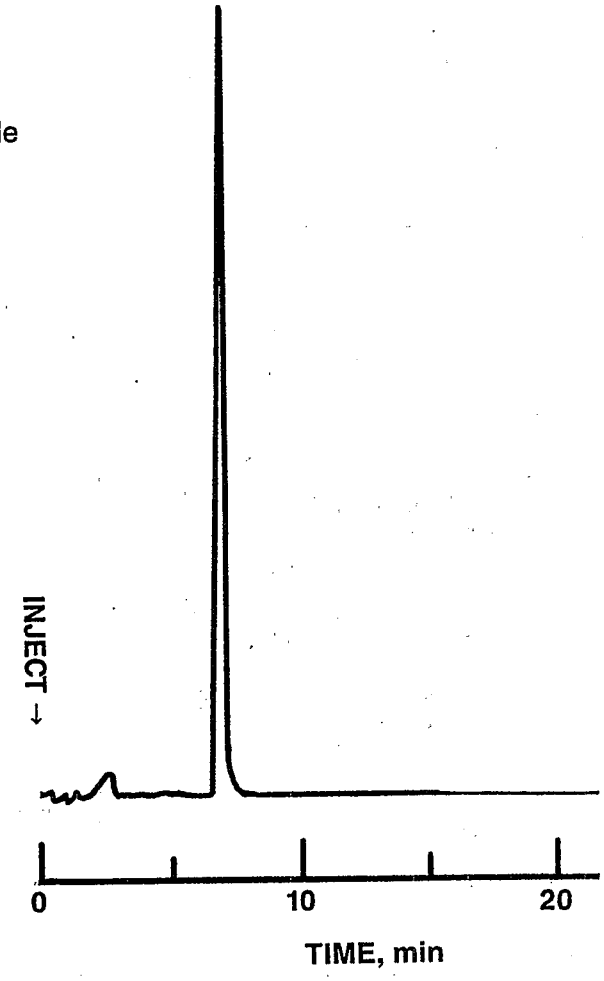

FIGURE 6. CHROMATOGRAM OF DNPH-FORMALDEHYDE DERIVATIVE

OPERATING PARAMETERS
HPLC

Column: Zorbax ODS or C-18 RP
Mobile Phase: 60% Acetonitrile/40% Water
Detector: Ulltraviolet, operating at 360 nm
Flow Rate: 1 mL/min.
Retention Time: ~ 7 minutes for formaldehyde
Sample Injection Volume: 25 uL

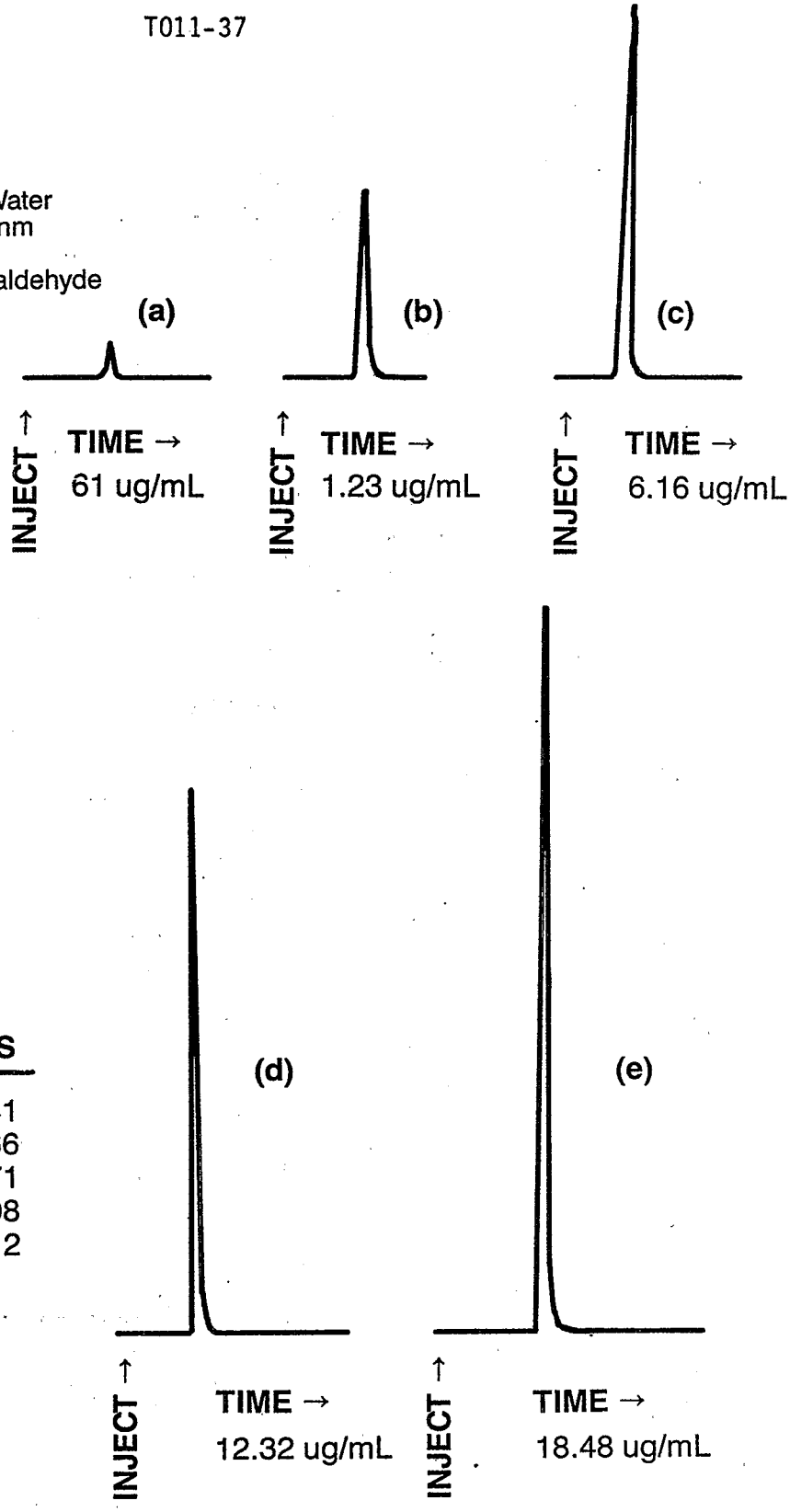

CONC	AREA COUNTS
.61 ug/mL	226541
1.23 ug/mL	452166
6.16 ug/mL	2257271
12.32 ug/mL	4711408
18.48 ug/mL	6953812

FIGURE 7. HPLC CHROMATOGRAM OF VARYING CONCENTRATIONS OF DNPH-FORMALDEHYDE DERIVATIVE

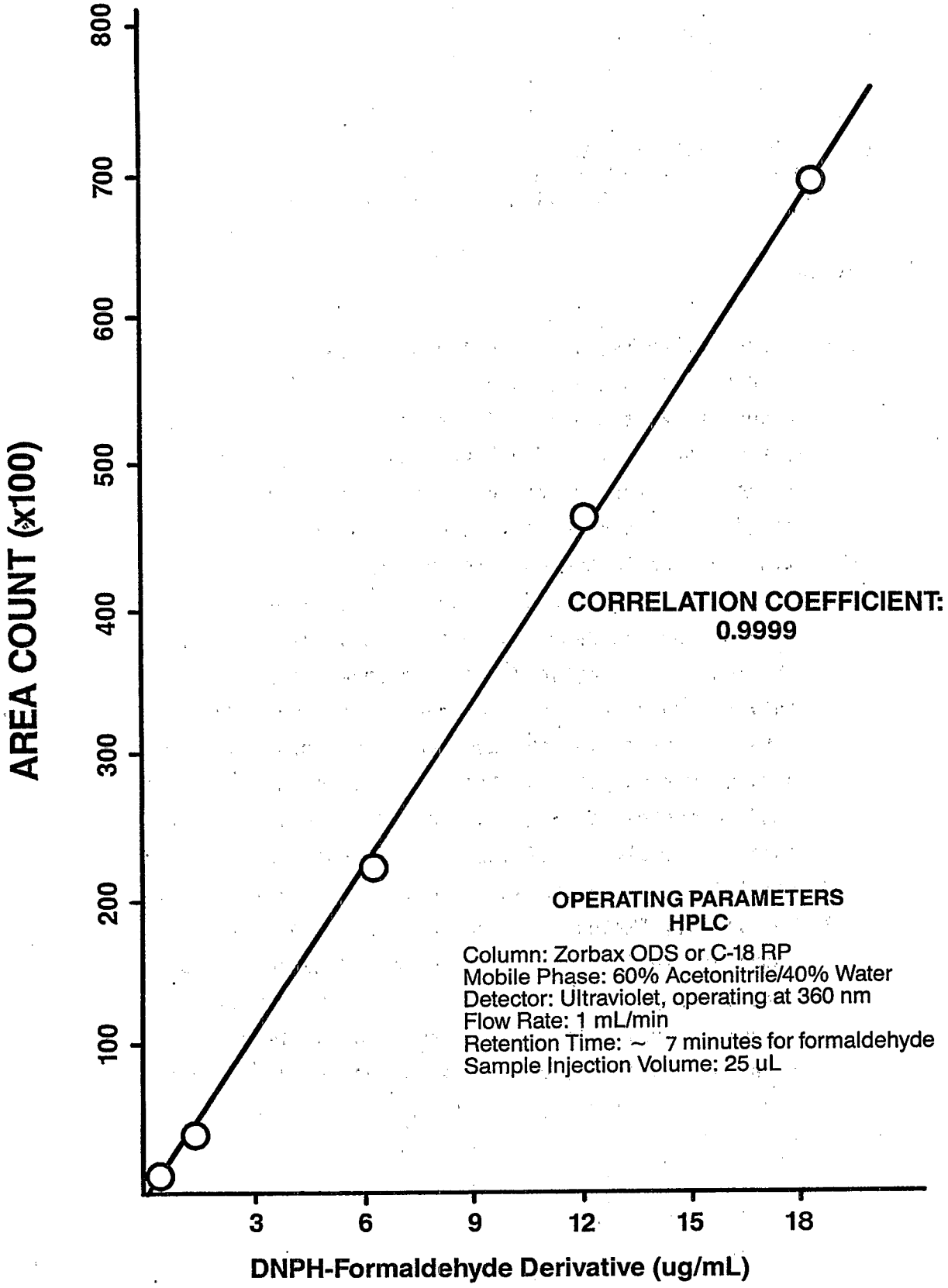

FIGURE 8. CALIBRATION CURVE FOR FORMALDEHYDE

METHOD TO12

METHOD FOR THE DETERMINATION OF NON-METHANE ORGANIC COMPOUNDS (NMOC) IN AMBIENT AIR USING CRYOGENIC PRECONCENTRATION AND DIRECT FLAME IONIZATION DETECTION (PDFID)

1. Scope

1.1 In recent years, the relationship between ambient concentrations of precursor organic compounds and subsequent downwind concentrations of ozone has been described by a variety of photochemical dispersion models. The most important application of such models is to determine the degree of control of precursor organic compounds that is necessary in an urban area to achieve compliance with applicable ambient air quality standards for ozone (1,2).

1.2 The more elaborate theoretical models generally require detailed organic species data obtained by multicomponent gas chromatography (3). The Empirical Kinetic Modeling Approach (EKMA), however, requires only the total non-methane organic compound (NMOC) concentration data; specifically, the average total NMOC concentration from 6 a.m. to 9 a.m. daily at the sampling location. The use of total NMOC concentration data in the EKMA substantially reduces the cost and complexity of the sampling and analysis system by not requiring qualitative and quantitative species identification.

1.3 Method TO1, "Method for The Determination of Volatile Organic Compounds in Ambient Air Using Tenax® Adsorption and Gas Chromatography/Mass Spectrometry (GC/MS)", employs collection of certain volatile organic compounds on Tenax® GC with subsequent analysis by thermal desorption/cryogenic preconcentration and GC/MS identification. This method (TO12) combines the same type of cryogenic concentration technique used in Method TO1 for high sensitivity with the simple flame ionization detector (FID) of the GC for total NMOC measurements, without the GC columns and complex procedures necessary for species separation.

1.4 In a flame ionization detector, the sample is injected into a hydrogen-rich flame where the organic vapors burn producing ionized molecular fragments. The resulting ion fragments are then collected and detected. The FID is nearly a universal detector. However, the detector response varies with the species of [functional group in] the organic compound in an oxygen atmosphere. Because this method employs a helium or argon carrier gas, the detector response is nearly one for all compounds. Thus, the historical short-coming of the FID involving varying detector response to different organic functional groups is minimized.

1.5 The method can be used either for direct, in situ ambient measurements or (more commonly) for analysis of integrated samples collected in specially treated stainless steel canisters. EKMA models generally require 3-hour integrated NMOC measurements over the 6 a.m. to 9 a.m. period and are used by State or local agencies to prepare State Implementation Plans (SIPs) for ozone control to achieve compliance with the National Ambient Air Quality Standards (NAAQS) for ozone. For direct, in situ ambient measurements, the analyst must be present during the 6 a.m. to 9 a.m. period, and repeat measurements (approximately six per hour) must be taken to obtain the 6 a.m. to 9 a.m. average NMOC concentration. The use of sample canisters allows the collection of integrated air samples over the 6 a.m. to 9 a.m. period by unattended, automated samplers. This method has incorporated both sampling approaches.

2. Applicable Documents

2.1 ASTM Standards

D1356 - Definition of Terms Related to Atmospheric Sampling and Analysis

E260 - Recommended Practice for General Gas Chromatography Procedures

E355 - Practice for Gas Chromatography Terms and Relationships

2.2 Other Documents

U. S. Environmental Protection Agency Technical Assistance Documents (4,5)
Laboratory and Ambient Air Studies (6-10)

3. Summary of Method

3.1 A whole air sample is either extracted directly from the ambient air and analyzed on site by the GC system or collected into a precleaned sample canister and analyzed off site.

3.2 The analysis requires drawing a fixed-volume portion of the sample air at a low flow rate through a glass-bead filled trap that is cooled to approximately -186°C with liquid argon. The cryogenic trap simultaneously collects and concentrates the NMOC (either via condensation or adsorption) while allowing the methane, nitrogen, oxygen, etc. to pass through the trap without retention. The system is dynamically calibrated so that the volume of sample passing through the trap does not have to be quantitatively measured, but must be precisely repeatable between the calibration and the analytical phases.

3.3 After the fixed-volume air sample has been drawn through the trap, a helium carrier gas flow is diverted to pass through the trap, in the opposite direction to the sample flow, and into an FID. When the residual air and methane have been flushed from the trap and the FID baseline restabilizes, the cryogen is removed and the temperature of the trap is raised to approximately 90°C.

3.4 The organic compounds previously collected in the trap revolatilize due to the increase in temperature and are carried into the FID, resulting in a response peak or peaks from the FID. The area of the peak or peaks is integrated, and the integrated value is translated to concentration units via a previously-obtained calibration curve relating integrated peak areas with known concentrations of propane.

3.5 By convention, concentrations of NMOC are reported in units of parts per million carbon (ppmC), which, for a specific compound, is the concentration by volume (ppmV) multiplied by the number of carbon atoms in the compound.

6. Interferences

6.1 In field and laboratory evaluation, water was found to cause a positive shift in the FID baseline. The effect of this shift is minimized by carefully selecting the integration termination point and adjusted baseline used for calculating the area of the NMOC peak(s).

6.2 When using helium as a carrier gas, FID response is quite uniform for most hydrocarbon compounds, but the response can vary considerably for other types of organic compounds.

7. Apparatus

7.1 Direct Air Sampling (Figure 1)

7.1.1 Sample manifold or sample inlet line - to bring sample air into the analytical system.

7.1.2 Vacuum pump or blower - to draw sample air through a sample manifold or long inlet line to reduce inlet residence time. Maximum residence time should be no greater than 1 minute.

7.2 Remote Sample Collection in Pressurized Canisters (Figure 2)

7.2.1 Sample canister(s) - stainless steel, Summa®-polished vessel(s) of 4-6 L capacity (Scientific Instrumentation Specialists, Inc., P.O. Box 8941, Moscow, ID 83843), used for automatic collection of 3-hour integrated field air samples. Each canister should have a unique identification number stamped on its frame.

7.2.2 Sample pump - stainless steel, metal bellows type (Model MB-151, Metal Bellows Corp., 1075 Providence Highway, Sharon, MA 02067) capable of 2 atmospheres minimum output pressure. Pump must be free of leaks, clean, and uncontaminated by oil or organic compounds.

7.2.3 Pressure gauge - 0-30 psig (0-240 kPa).

7.2.4 Solenoid valve - special electrically-operated, bistable solenoid valve (Skinner Magnelatch Valve, New Britain,

CT), to control sample flow to the canister with negligible temperature rise (Figure 3). The use of the Skinner Magnelatch valve avoids any substantial temperature rise that would occur with a conventional, normally closed solenoid valve, which would have to be energized during the entire sample period. This temperature rise in the valve could cause outgasing of organics from the Viton valve seat material. The Skinner Magnelatch valve requires only a brief electrical pulse to open or close at the appropriate start and stop times and therefore experiences no temperature increase. The pulses may be obtained with an electronic timer that can be programmed for short (5 to 60 seconds) ON periods or with a conventional mechanical timer and a special pulse circuit. Figure 3 [a] illustrates a simple electrical pulse circuit for operating the Skinner Magnelatch solenoid valve with a conventional mechanical timer. However, with this simple circuit, the valve may operate unpredictably during brief power interruptions or if the timer is manually switched on and off too fast. A better circuit incorporating a time-delay relay to provide more reliable valve operation is shown in Figure 3[b].

7.2.5 Stainless steel orifice (or short capillary) - capable of maintaining a substantially constant flow over the sampling period (see Figure 4).

7.2.6 Particulate matter filter - 2 micron stainless steel sintered in-line type (see Figure 4).

7.2.7 Timer - used for unattended sample collection. Capable of controlling pump(s) and solenoid valve.

7.3 Sample Canister Cleaning (Figure 5)

7.3.1 Vacuum pump - capable of evacuating sample canister(s) to an absolute pressure of <5 mm Hg.

7.3.2 Manifold - stainless steel manifold with connections for simultaneously cleaning several canisters.

7.3.3 Shut off valve(s) - seven required.

7.3.4 Vacuum gauge - capable of measuring vacuum in the manifold to an absolute pressure of 5 mm Hg or less.

7.3.5 Cryogenic trap (2 required) - U-shaped open tubular trap cooled with liquid nitrogen or argon used to prevent contamination from back diffusion of oil from vacuum pump, and to provide clean, zero air to sample canister(s).

7.3.6 Pressure gauge - 0-50 psig (0-345 kPa), to monitor zero air pressure.

7.3.7 Flow control valve - to regulate flow of zero air into canister(s).

7.3.8 Humidifier - water bubbler or other system capable of providing moisture to the zero air supply.

7.4 Analytical System (Figure 1)

7.4.1 FID detector system - including flow controls for the FID fuel and air, temperature control for the FID, and signal processing electronics. The FID burner air, hydrogen, and helium carrier flow rates should be set according to the manufacturer's instructions to obtain an adequate FID response while maintaining as stable a flame as possible throughout all phases of the analytical cycle.

7.4.2 Chart recorder - compatible with the FID output signal, to record FID response.

7.4.3 Electronic integrator - capable of integrating the area of one or more FID response peaks and calculating peak area corrected for baseline drift. If a separate integrator and chart recorder are used, care must be exercised to be sure that these components do not interfere with each other electrically. Range selector controls on both the integrator and the FID analyzer may not provide accurate range ratios, so individual calibration curves should be prepared for each range to be used. The integrator should be capable of marking the beginning and ending of peaks, constructing the appropriate baseline between the start and end of the integration period, and calculating the peak area.

Note: The FID (7.4.1), chart recorder (7.4.2), integrator (7.4.3), valve heater (7.4.5), and a trap heating system are conveniently provided by a standard laboratory chromatograph and associated integrator. EPA has adapted two such systems for the PDFID method: a Hewlett-Packard model 5880 (Hewlett-Packard Corp., Avondale, PA) and a Shimadzu model GC8APF (Shimadzu Scientific Instruments Inc., Columbia, MD; see Reference 5). Other similar systems may also be applicable.

7.4.4 Trap - the trap should be carefully constructed from a single piece of chromatographic-grade stainless steel tubing (0.32 cm O.D, 0.21 cm I.D.) as shown in Figure 6. The central portion of the trap (7-10 cm) is packed with 60/80 mesh glass beads, with small glass wool (dimethyldichlorosilane-treated) plugs to retain the beads. The trap must fit conveniently into the Dewar flask (7.4.9), and the arms must be of an appropriate length to allow the beaded portion of the trap to be submerged below the level of liquid cryogen in the Dewar. The trap should connect directly to the six-port valve, if possible, to minimize line length between the trap and the FID. The trap must be mounted to allow the Dewar to be slipped conveniently on and off the trap and also to facilitate heating of the trap (see 7.4.13).

7.4.5 Six-port chromatographic valve - Seiscor Model VIII (Seismograph Service Corp., Tulsa, OK), Valco Model 9110 (Valco Instruments Co., Houston, TX), or equivalent. The six-port valve and as much of the interconnecting tubing as practical should be located inside an oven or otherwise heated to 80 - 90°C to minimize wall losses or adsorption/desorption in the connecting tubing. All lines should be as short as practical.

7.4.6 Multistage pressure regulators - standard two-stage, stainless steel diaphram regulators with pressure gauges, for helium, air, and hydrogen cylinders.

7.4.7 Pressure regulators - optional single stage, stainless steel, with pressure gauge, if needed, to maintain constant helium carrier and hydrogen flow rates.

7.4.8 Fine needle valve - to adjust sample flow rate through trap.

7.4.9 Dewar flask - to hold liquid cryogen to cool the trap, sized to contain submerged portion of trap.

7.4.10 Absolute pressure gauge - 0-450 mm Hg,(2 mm Hg [scale divisions indicating units]), to monitor repeatable volumes of sample air through cryogenic trap (Wallace and Tiernan, Model 61C-ID-0410, 25 Main Street, Belleville, NJ).

7.4.11 Vacuum reservoir - 1-2 L capacity, typically 1 L.

7.4.12 Gas purifiers - gas scrubbers containing Drierite® or silica gel and 5A molecular sieve to remove moisture and organic impurities in the helium, air, and hydrogen gas flows (Alltech Associates, Deerfield, IL). Note: Check purity of gas purifiers prior to use by passing zero-air through the unit and analyzing according to Section 11.4. Gas purifiers are clean if produce [contain] less than 0.02 ppmC hydrocarbons.

7.4.13 Trap heating system - chromatographic oven, hot water, or other means to heat the trap to 80° to 90°C. A simple heating source for the trap is a beaker or Dewar filled with water maintained at 80-90°C. More repeatable types of heat sources are recommended, including a temperature-programmed chromatograph oven, electrical heating of the trap itself, or any type of heater that brings the temperature of the trap up to 80-90°C in 1-2 minutes.

7.4.14 Toggle shut-off valves (2) - leak free, for vacuum valve and sample valve.

7.4.15 Vacuum pump - general purpose laboratory pump capable of evacuating the vacuum reservoir to an appropriate vacuum that allows the desired sample volume to be drawn through the trap.

7.4.16 Vent - to keep the trap at atmospheric pressure during trapping when using pressurized canisters.

7.4.17 Rotameter - to verify vent flow.

7.4.18 Fine needle valve (optional) - to adjust flow rate of sample from canister during analysis.

7.4.19 Chromatographic-grade stainless steel tubing (Alltech Applied Science, 2051 Waukegan Road, Deerfield, IL, 60015, (312) 948-8600) and stainless steel plumbing fittings - for interconnections. All such materials in contact with the sample, analyte, or support gases prior to analysis should be stainless steel or other inert metal. Do not use plastic or Teflon® tubing or fittings.

7.5 Commercially Available PDFID System (5)

7.5.1 A convenient and cost-effective modular PDFID system suitable for use with a conventional laboratory chromatograph is commercially available (NuTech Corporation, Model 8548, 2806 Cheek Road, Durham, NC, 27704, (919) 682-0402).

7.5.2 This modular system contains almost all of the apparatus items needed to convert the chromatograph into a PDFID analytical system and has been designed to be readily available and easy to assemble.

8. Reagents and Materials

8.1 Gas cylinders of helium and hydrogen - ultrahigh purity grade.

8.2 Combustion air - cylinder containing less than 0.02 ppm hydrocarbons, or equivalent air source.

8.3 Propane calibration standard - cylinder containing 1-100 ppm (3-300 ppmC) propane in air. The cylinder assay should be traceable to a National Bureau of Standards (NBS) Standard Reference Material (SRM) or to a NBS/EPA-approved Certified Reference Material (CRM).

8.4 Zero air - cylinder containing less than 0.02 ppmC hydrocarbons. Zero air may be obtained from a cylinder of zero-grade compressed air scrubbed with Drierite® or silica gel and 5A molecular sieve or activated charcoal, or by catalytic cleanup

of ambient air. All zero air should be passed through a liquid argon cold trap for final cleanup, then passed through a hyrdo-carbon-free water bubbler (or other device) for humidification.

8.5 Liquid cryogen - liquid argon (bp -185.7°C) or liquid oxygen, (bp -183°C) may be used as the cryogen. Experiments have shown no differences in trapping efficiency between liquid argon and liquid oxygen. However, appropriate safety precautions must be taken if liquid oxygen is used. Liquid nitrogen (bp -195°C) should not be used because it causes condensation of oxygen and methane in the trap.

9. Direct Sampling

9.1 For direct ambient air sampling, the cryogenic trapping system draws the air sample directly from a pump-ventilated distribution manifold or sample line (see Figure 1). The connecting line should be of small diameter (1/8" O.D.) stainless steel tubing and as short as possible to minimize its dead volume.

9.2 Multiple analyses over the sampling period must be made to establish hourly or 3-hour NMOC concentration averages.

10. Sample Collection in Pressurized Canister(s)

For integrated pressurized canister sampling, ambient air is sampled by a metal bellows pump through a critical orifice (to maintain constant flow), and pressurized into a clean, evacuated, Summa®-polished sample canister. The critical orifice size is chosen so that the canister is pressurized to approximately one atmosphere above ambient pressure, at a constant flow rate over the desired sample period. Two canisters are connected in parallel for duplicate samples. The canister(s) are then returned to the laboratory for analysis, using the PDFID analytical system. Collection of ambient air samples in pressurized canisters provides the following advantages:

- Convenient integration of ambient samples over a specific time period
- Capability of remote sampling with subsequent central laboratory analysis
- Ability to ship and store samples, if necessary

- o Unattended sample collection
- o Analysis of samples from multiple sites with one analytical system
- o Collection of replicate samples for assessment of measurement precision

With canister sampling, however, great care must be exercised in selecting, cleaning, and handling the sample canister(s) and sampling apparatus to avoid losses or contamination of the samples.

10.1 Canister Cleanup and Preparation

10.1.1 All canisters must be clean and free of any contaminants before sample collection.

10.1.2 Leak test all canisters by pressurizing them to approximately 30 psig [200 kPa (gauge)] with zero air. The use of the canister cleaning system (see Figure 5) may be adequate for this task. Measure the final pressure - close the canister valve, then check the pressure after 24 hours. If leak tight, the pressure should not vary more than $\pm$ 2 psig over the 24-hour period. Note leak check result on sampling data sheet, Figure 7.

10.1.3 Assemble a canister cleaning system, as illustrated in Figure 5. Add cryogen to both the vacuum pump and zero air supply traps. Connect the canister(s) to the manifold. Open the vent shut off valve and the canister valve(s) to release any remaining pressure in the canister. Now close the vent shut off valve and open the vacuum shut off valve. Start the vacuum pump and evacuate the canister(s) to $\leq$ 5.0 mm Hg (for at least one hour). [Note: On a daily basis or more often if necessary, blow-out the cryogenic traps with zero air to remove any trapped water from previous canister cleaning cycles.]

10.1.4 Close the vacuum and vacuum gauge shut off valves and open the zero air shut off valve to pressurize the canister(s) with moist zero air to approximately 30 psig [200 kPa (gauge)]. If a zero gas generator system is used,

the flow rate may need to be limited to maintain the zero air quality.

10.1.5 Close the zero shut off valve and allow canister(s) to vent down to atmospheric pressure through the vent shut off valve. Close the vent shut off valve. Repeat steps 10.1.3 through 10.1.5 two additional times for a total of three (3) evacuation/pressurization cycles for each set of canisters.

10.1.6 As a "blank" check of the canister(s) and cleanup procedure, analyze the final zero-air fill of 100% of the canisters until the cleanup system and canisters are proven reliable. The check can then be reduced to a lower percentage of canisters. Any canister that does not test clean (compared to direct analysis of humidified zero air of less than 0.02 ppmC) should not be utilized.

10.1.7 The canister is then re-evacuated to $\leq$ 5.0 mm Hg, using the canister cleaning system, and remains in this condition until use. Close the canister valve, remove the canister from the canister cleaning system and cap canister connection with a stainless steel fitting. The canister is now ready for collection of an air sample. Attach an identification tag to the neck of each canister for field notes and chain-of-custody purposes.

10.2 Collection of Integrated Whole-Air Samples

10.2.1 Assemble the sampling apparatus as shown in Figure 2. The connecting lines between the sample pump and the canister(s) should be as short as possible to minimize their volume. A second canister is used when a duplicate sample is desired for quality assurance (QA) purposes (see Section 12.2.4). The small auxiliary vacuum pump purges the inlet manifold or lines with a flow of several L/min to minimize the sample residence time. The larger metal bellows pump takes a small portion of this sample to fill and pressurize the sample canister(s). Both pumps should be shock-mounted to minimize vibration. Prior to field use, each sampling system should be leak

tested. The outlet side of the metal bellows pump can be checked for leaks by attaching the 0-30 psig pressure gauge to the canister(s) inlet via connecting tubing and pressurizing to 2 atmospheres or approximately 29.4 psig. If pump and connecting lines are leak free pressure should remain at ± 2 psig for 15 minutes. To check the inlet side, plug the sample inlet and insure that there is no flow at the outlet of the pump.

10.2.2 Calculate the flow rate needed so that the canister(s) are pressurized to approximately one atmosphere above ambient pressure (2 atmospheres absolute pressure) over the desired sample period, utilizing the following equation:

$$F = \frac{(P)(V)(N)}{(T)(60)}$$

where:

F = flow rate (cm^3/min)
P = final canister pressure (atmospheres absolute)
$= (P_g/P_a) + 1$
V = volume of the canister (cm^3)
N = number of canisters connected together for simultaneous sample collection
T = sample period (hours)
P_g = gauge pressure in canister, psig (kPa)
P_a = standard atmospheric pressure, 14.7 psig (101 kPa)

For example, if one 6-L canister is to be filled to 2 atmospheres absolute pressure (14.7 psig) in 3 hours, the flow rate would be calculated as follows:

$$F = \frac{2 \times 6000 \times 1}{3 \times 60} = 67 \text{ cm}^3/\text{min}$$

10.2.3 Select a critical orifice or hypodermic needle suitable to maintain a substantially constant flow at the calculated flow rate into the canister(s) over the desired sample period. A 30-gauge hypodermic needle, 2.5 cm

long, provides a flow of approximately 65 cm^3/min with the Metal Bellows Model MBV-151 pump (see Figure 4). Such a needle will maintain approximately constant flow up to a canister pressure of about 10 psig (71 kPa), after which the flow drops with increasing pressure. At 14.7 psig (2 atmospheres absolute pressure), the flow is about 10% below the original flow.

10.2.4 Assemble the 2.0 micron stainless steel in-line particulate filter and position it in front of the critical orifice. A suggested filter-hypodermic needle assembly can be fabricated as illustrated in Figure 4.

10.2.5 Check the sampling system for contamination by filling two evacuated, cleaned canister(s) (See Section 10.1) with humidified zero air through the sampling system. Analyze the canisters according to Section 11.4. The sampling system is free of contamination if the canisters contain less than 0.02 ppmC hydrocarbons, similar to that of humidified zero air.

10.2.6 During the system contamination check procedure, check the critical orifice flow rate on the sampling system to insure that sample flow rate remains relatively constant ($\pm$10%) up to about 2 atmospheres absolute pressure (101 kPa). Note: A drop in the flow rate may occur near the end of the sampling period as the canister pressure approaches two atmospheres.

10.2.7 Reassemble the sampling system. If the inlet sample line is longer than 3 meters, install an auxiliary pump to ventilate the sample line, as illustrated in Figure 2.

10.2.8 Verify that the timer, pump(s) and solenoid valve are connected and operating properly.

10.2.9 Verify that the timer is correctly set for the desired sample period, and that the solenoid valve is closed.

10.2.10 Connect a cleaned, evacuated canister(s) (Section 10.1) to the non-contaminated sampling system, by way of the solenoid valve, for sample collection.

10.2.11 Make sure the solenoid valve is closed. Open the canister valve(s). Temporarily connect a small rotameter to the sample inlet to verify that there is no flow. Note: Flow detection would indicate a leaking (or open) solenoid valve. Remove the rotameter after leak detection procedure.

10.2.12 Fill out the necessary information on the Field Data Sheet (Figure 7).

10.2.13 Set the automatic timer to start and stop the pump or pumps to open and close the solenoid valve at the appropriate time for the intended sample period. Sampling will begin at the pre-determined time.

10.2.14 After the sample period, close the canister valve(s) and disconnect the canister(s) from the sampling system. Connect a pressure gauge to the canister(s) and briefly open and close the canister valve. Note the canister pressure on the Field Data Sheet (see Figure 7). The canister pressure should be approximately 2 atmospheres absolute [1 atmosphere or 101 kPa (gauge)]. Note: If the canister pressure is not approximately 2 atmospheres absolute (14.7 psig), determine and correct the cause before next sample. Re-cap canister valve.

10.2.15 Fill out the identification tag on the sample canister(s) and complete the Field Data Sheet as necessary. Note any activities or special conditions in the area (rain, smoke, etc.) that may affect the sample contents on the sampling data sheet.

10.2.16 Return the canister(s) to the analytical system for analysis.

11. Sample Analysis

11.1 Analytical System Leak Check

11.1.1 Before sample analysis, the analytical system is assembled (see Figure 1) and leak checked.

11.1.2 To leak check the analytical system, place the six-port gas valve in the trapping position. Disconnect and cap the absolute pressure gauge. Insert a pressure gauge capable of recording up to 60 psig at the vacuum valve outlet.

11.1.3 Attach a valve and a zero air supply to the sample inlet port. Pressurize the system to about 50 psig (350 kPa) and close the valve.

11.1.4 Wait approximately 3 hrs. and re-check pressure. If the pressure did not vary more than ± 2 psig, the system is considered leak tight.

11.1.5 If the system is leak free, de-pressurize and reconnect absolute pressure gauge.

11.1.6 The analytical system leak check procedure needs to be performed during the system checkout, during a series of analysis or if leaks are suspected. This should be part of the user-prepared SOP manual (see Section 12.1).

11.2 Sample Volume Determination

11.2.1 The vacuum reservoir and absolute pressure gauge are used to meter a precisely repeatable volume of sample air through the cryogenically-cooled trap, as follows: With the sample valve closed and the vacuum valve open, the reservoir is first evacuated with the vacuum pump to a predetermined pressure (e.g., 100 mm Hg). Then the vacuum valve is closed and the sample valve is opened to allow sample air to be drawn through the cryogenic trap and into the evacuated reservoir until a second predetermined reservoir pressure is reached (e.g., 300 mm Hg). The (fixed) volume of air thus sampled is determined by the pressure rise in the vacuum reservoir (difference between the predetermined pressures) as measured by the absolute pressure gauge (see Section 12.2.1).

11.2.2 The sample volume can be calculated by:

$$V_s = \frac{(\Delta P)(V_r)}{(P_s)}$$

where:

V_s = volume of air sampled (standard cm^3)
ΔP = pressure difference measured by gauge (mm Hg)
V_r = volume of vacuum reservoir (cm^3) usually 1 L
P_s = standard pressure (760 mm Hg)

For example, with a vacuum reservoir of 1000 cm^3 and a pressure change of 200 mm Hg (100 to 300 mm Hg), the volume sampled would be 263 cm^3. [Note: Typical sample volume using this procedure is between 200-300 cm^3.]

11.2.3 The sample volume determination need only be performed once during the system check-out and shall be part of the user-prepared SOP Manual (see Section 12.1).

11.3 Analytical System Dynamic Calibration

11.3.1 Before sample analysis, a complete dynamic calibration of the analytical system should be carried out at five or more concentrations on each range to define the calibration curve. This should be carried out initially and periodically thereafter [may be done only once during a series of analyses]. This should be part of the user-prepared SOP Manual (See Section 12.1). The calibration should be verified with two or three-point calibration checks (including zero) each day the analytical system is used to analyze samples.

11.3.2 Concentration standards of propane are used to calibrate the analytical system. Propane calibration standards may be obtained directly from low concentration cylinder standards or by dilution of high concentration cylinder

standards with zero air (see Section 8.3). Dilution flow rates must be measured accurately, and the combined gas stream must be mixed thoroughly for successful calibration of the analyzer. Calibration standards should be sampled directly from a vented manifold or tee. Note: Remember that a propane NMOC concentration in ppmC is three times the volumetric concentration in ppm.

11.3.3 Select one or more combinations of the following parameters to provide the desired range or ranges (e.g., 0-1.0 ppmC or 0-5.0 ppmC): FID attenuator setting, output voltage setting, integrator resolution (if applicable), and sample volume. Each individual range should be calibrated separately and should have a separate calibration curve. Note: Modern GC integrators may provide automatic ranging such that several decades of concentration may be covered in a single range. The user-prepared SOP manual should address variations applicable to a specific system design (see Section 12.1).

11.3.4 Analyze each calibration standard three times according to the procedure in Section 11.4. Insure that flow rates, pressure gauge start and stop readings, initial cryogen liquid level in the Dewar, timing, heating, integrator settings, and other variables are the same as those that will be used during analysis of ambient samples. Typical flow rates for the gases are: hydrogen, 30 cm^3/minute; helium carrier, 30 cm^3/minute; burner air, 400 cm^3/minute.

11.3.5 Average the three analyses for each concentration standard and plot the calibration curve(s) as average integrated peak area reading versus concentration in ppmC. The relative standard deviation for the three analyses should be less

than 3% (except for zero concentration). Linearity should be expected; points that appear to deviate abnormally should be repeated. Response has been shown to be linear over a wide range (0-10,000 ppbC). If nonlinearity is observed, an effort should be made to identify and correct the problem. If the problem cannot be corrected, additional points in the nonlinear region may be needed to define the calibration curve adequately.

11.4 Analysis Procedure

11.4.1 Insure the analytical system has been assembled properly, leaked checked, and properly calibrated through a dynamic standard calibration. Light the FID detector and allow to stabilize.

11.4.2 Check and adjust the helium carrier pressure to provide the correct carrier flow rate for the system. Helium is used to purge residual air and methane from the trap at the end of the sampling phase and to carry the re-volatilized NMOC from the trap into the FID. A single-stage auxiliary regulator between the cylinder and the analyzer may not be necessary, but is recommended to regulate the helium pressure better than the multistage cylinder regulator. When an auxiliary regulator is used, the secondary stage of the two-stage regulator must be set at a pressure higher than the pressure setting of the single-stage regulator. Also check the FID hydrogen and burner air flow rates (see 11.3.4).

11.4.3 Close the sample valve and open the vacuum valve to evacuate the vacuum reservoir to a specific predetermined value (e.g., 100 mm Hg).

11.4.4 With the trap at room temperature, place the six-port valve in the inject position.

11.4.5 Open the sample valve and adjust the sample flow rate needle valve for an appropriate trap flow of 50-100 cm^3/min. Note: The flow will be lower later, when the trap is cold.

11.4.6 Check the sample canister pressure before attaching it to the analytical system and record on Field Data Sheet (see Figure 7). Connect the sample canister or direct sample inlet to the six-port valve, as shown in Figure 1. For a canister, either the canister valve or an optional fine needle valve installed between the canister and the vent is used to adjust the canister flow rate to a value slightly higher than the trap flow rate set by the sample flow rate needle valve. The excess flow exhausts through the vent, which assures that the sample air flowing through the trap is at atmospheric pressure. The vent is connected to a flow indicator such as a rotameter as an indication of vent flow to assist in adjusting the flow control valve. Open the canister valve and adjust the canister valve or the sample flow needle valve to obtain a moderate vent flow as indicated by the rotameter. The sample flow rate will be lower (and hence the vent flow rate will be higher) when the the trap is cold.

11.4.7 Close the sample valve and open the vacuum valve (if not already open) to evacuate the vacuum reservoir. With the six-port valve in the inject position and the vacuum valve open, open the sample valve for 2-3 minutes [with both valves open, the pressure reading won't change] to flush and condition the inlet lines.

11.4.8 Close the sample valve and evacuate the reservoir to the predetermined sample starting pressure (typically 100 mm Hg) as indicated by the absolute pressure gauge.

11.4.9 Switch the six-port valve to the sample position.

11.4.10 Submerge the trap in the cryogen. Allow a few minutes for the trap to cool completely (indicated when the cryogen stops boiling). Add cryogen to the initial level used during system dynamic calibration. The level of the cryogenic liquid should remain constant with respect to the trap and should completely cover the beaded portion of the trap.

11.4.11 Open the sample valve and observe the increasing pressure on the pressure gauge. When it reaches the specific predetermined pressure (typically 300 mm Hg) representative of the desired sample volume (Section 11.2), close the sample valve.

11.4.12 Add a little cryogen or elevate the Dewar to raise the liquid level to a point slightly higher (3-15 mm) than the initial level at the beginning of the trapping. Note: This insures that organics do not bleed from the trap and are counted as part of the NMOC peak(s).

11.4.13 Switch the 6-port valve to the inject position, keeping the cryogenic liquid on the trap until the methane and upset peaks have deminished (10-20 seconds). Now close the canister valve to conserve the remaining sample in the canister.

11.4.14 Start the integrator and remove the Dewar flask containing the cryogenic liquid from the trap.

11.4.15 Close the GC oven door and allow the GC oven (or alternate trap heating system) to heat the trap at a predetermined rate (typically, 30°C/min) to 90°. Heating the trap volatilizes the concentrated NMOC such that the FID produces integrated peaks. A uniform trap temperature rise rate (above 0°C) helps to reduce variability and facilitates more accurate correction for the moisture-shifted baseline. With a chromatograph oven to heat the trap, the following parameters have been found to be acceptable: initial temperature, 30°C; initial time, 0.20 minutes (following start of the integrator); heat rate, 30°/minute; final temperature, 90°C.

11.4.16 Use the same heating process and temperatures for both calibration and sample analysis. Heating the trap too quickly may cause an initial negative response that could hamper accurate integration. Some initial experimentation may be necessary to determine the optimal heating procedure for each system. Once established, the procedure should be consistent for each analysis as outlined in the user-prepared SOP Manual.

11.4.17 Continue the integration (generally, in the range of 1-2 minutes is adequate) only long enough to include all of the organic compound peaks and to establish the end point FID baseline, as illustrated in Figure 8. The integrator should be capable of marking the beginning and ending of peaks, constructing the appropriate operational baseline between the start and end of the integration period, and calculating the resulting corrected peak area. This ability is necessary because the moisture in the sample, which is also concentrated in the trap, will cause a slight positive baseline shift. This baseline shift starts as the trap warms and continues until all of the moisture is swept from the trap, at which time the baseline returns to its normal level. The shift always continues longer than the ambient organic peak(s). The integrator should be programmed to correct for this shifted baseline by ending the integration at a point after the last NMOC peak and prior to the return of the shifted baseline to normal (see Figure 8) so that the calculated operational baseline effectively compensates for the water-shifted baseline. Electronic integrators either do this automatically or they should be programmed to make this correction. Alternatively, analyses of humidified zero air prior to sample analyses should be performed to determine the water envelope and the proper blank value for correcting the ambient air concentration measurements accordingly. Heating and flushing of the trap should continue after the integration period has ended to insure all water has been removed to prevent buildup of water in the trap. Therefore, be sure that the 6-port valve remains in the inject position until all moisture has purged from the trap (3 minutes or longer).

11.4.18 Use the dynamic calibration curve (see Section 11.3) to convert the integrated peak area reading into concentration units (ppmC). Note that the NMOC peak shape may not be precisely reproducible due to variations in heating the trap, but the total NMOC peak area should be reproducible.

11.4.19 Analyze each canister sample at least twice and report the average NMOC concentration. Problems during an analysis occasionally will cause erratic or inconsistent results. If the first two analyses do not agree within ± 5% relative standard deviation (RSD), additional analyses should be made to identify inaccurate measurements and produce a more accurate average (see also Section 12.2.).

12. Performance Criteria and Quality Assurance

This section summarizes required quality assurance measures and provides guidance concerning performance criteria that should be achieved within each laboratory.

12.1 Standard Operating Procedures (SOPs)

12.1.1 Users should generate SOPs describing and documenting the following activities in their laboratory: (1) assembly, calibration, leak check, and operation of the specific sampling system and equipment used; (2) preparation, storage, shipment, and handling of samples; (3) assembly, leak-check, calibration, and operation of the analytical system, addressing the specific equipment used; (4) canister storage and cleaning; and (5) all aspects of of data recording and processing, including lists of computer hardware and software used.

12.1.2 SOPs should provide specific stepwise instructions and should be readily available to, and understood by, the laboratory personnel conducting the work.

12.2 Method Sensitivity, Accuracy, Precision and Linearity

12.2.1 The sensitivity and precision of the method is proportional to the sample volume. However, ice formation in the trap may reduce or stop the sample flow during trapping if the sample volume exceeds 500 cm^3. Sample volumes below about 100-150 cm^3 may cause increased measurement variability due to dead volume in lines and valves. For most typical ambient NMOC concentrations, sample volumes in the range of 200-400 cm^3 appear to be appropriate. If a response peak obtained with a 400 cm^3 sample is off scale or exceeds the calibration range, a second analysis can be carried out with a smaller volume. The actual sample volume used need not be accurately known if it is precisely repeatable during both calibration and analysis. Similarly, the actual volume of the vacuum reservoir need not be accurately known. But the reservoir volume should be matched to the pressure range and resolution of the absolute pressure gauge so that the measurement of the pressure change in the reservoir, hence the sample volume, is repeatable within 1%. A 1000 cm^3 vacuum reservoir and a pressure change of 200 mm Hg, measured with the specified pressure gauge, have provided a sampling precision of $\pm$ 1.31 cm^3. A smaller volume reservoir may be used with a greater pressure change to accommodate absolute pressure gauges with lower resolution, and vice versa.

12.2.2 Some FID detector systems associated with laboratory chromatographs may have autoranging. Others may provide attenuator control and internal full-scale output voltage selectors. An appropriate combination should be chosen so that an adequate output level for accurate integration is obtained down to the detection limit; however, the electrometer or integrator must not be driven into saturation at the upper end of the calibration. Saturation of the electrometer may be indicated by flattening of the calibration curve at

high concentrations. Additional adjustments of range and sensitivity can be provided by adjusting the sample volume used, as discussed in Section 12.2.1.

12.2.3 System linearity has been documented (6) from 0 to 10,000 ppbC.

12.2.4 Some organic compounds contained in ambient air are "sticky" and may require repeated analyses before they fully appear in the FID output. Also, some adjustment may have to be made in the integrator off time setting to accommodate compounds that reach the FID late in the analysis cycle. Similarly, "sticky" compounds from ambient samples or from contaminated propane standards may temporarily contaminate the analytical system and can affect subsequent analyses. Such temporary contamination can usually be removed by repeated analyses of humidified zero air.

12.2.5 Simultaneous collection of duplicate samples decreases the possibility of lost measurement data from samples lost due to leakage or contamination in either of the canisters. Two (or more) canisters can be filled simultaneously by connecting them in parallel (see Figure 2(a)) and selecting an appropriate flow rate to accommodate the number of canisters (Section 10.2.2). Duplicate (or replicate) samples also allow assessment of measurement precision based on the differences between duplicate samples (or the standard deviations among replicate samples).

13. Method Modification

13.1 Sample Metering System

13.1.1 Although the vacuum reservoir and absolute pressure gauge technique for metering the sample volume during analysis is efficient and convenient, other techniques should work also.

13.1.2 A constant sample flow could be established with a vacuum pump and a critical orifice, with the six-port valve being switched to the sample position for a measured time period.

A gas volume meter, such as a wet test meter, could also be used to measure the total volume of sample air drawn through the trap. These alternative techniques should be tested and evaluated as part of a user-prepared SOP manual.

13.2 FID Detector System

13.2.1 A variety of FID detector systems should be adaptable to the method.

13.2.2 The specific flow rates and necessary modifications for the helium carrier for any alternative FID instrument should be evaluated prior to use as part of the user-prepared SOP manual.

13.3 Range

13.3.1 It may be possible to increase the sensitivity of the method by increasing the sample volume. However, limitations may arise such as plugging of the trap by ice.

13.3.2 Any attempt to increase sensitivity should be evaluated as part of the user-prepared SOP manual.

13.4 Sub-Atmospheric Pressure Canister Sampling

13.4.1 Collection and analysis of canister air samples at sub-atmospheric pressure is also possible with minor modifications to the sampling and analytical procedures.

13.4.2 Method TO-14, "Integrated Canister Sampling for Selective Organics: Pressurized and Sub-atmospheric Collection Mechanism," addresses sub-atmospheric pressure canister sampling. Additional information can be found in the literature (11-17).

1. Uses, Limitations, and Technical Basis of Procedures for Quantifying Relationships Between Photochemical Oxidants and Precursors, EPA-450/2-77-21a, U.S. Environmental Protection Agency, Research Triangle Park, NC, November 1977.

2. Guidance for Collection of Ambient Non-Methane Organic Compound (NMOC) Data for Use in 1982 Ozone SIP Development, EPA-450/4-80-011, U.S. Environmental Protection Agency, Research Triangle Park, NC, June 1980.

3. H. B. Singh, Guidance for the Collection and Use of Ambient Hydrocarbons Species Data in Development of Ozone Control Strategies, EPA-450/480-008, U.S. Environmental Protection Agency, Research Triangle Park, NC, April 1980.

4. R. M. Riggin, Technical Assistance Document for Sampling and Analysis of Toxic Organic Compounds in Ambient Air, EPA-600/483-027, U.S. Environmental Protection Agency, Research Triangle Park, NC, 1983.

5. M. J. Jackson, et al., Technical Assistance Document for Assembly and Operation of the Suggested Preconcentration Direct Flame Ionization Detection (PDFID) Analytical System, publication scheduled for late 1987; currently available in draft form from the Qualilty Assurance Division, MD-77, U.S. Environmental Protection Agency, Research Triangle Park, NC 27711.

6. R. K. M. Jayanty, et al., Laboratory Evaluation of Non-Methane Organic Carbon Determination in Ambient Air by Cryogenic Preconcentration and Flame Ionization Detection, EPA-600/54-82-019, U.S. Evironmental Protection Agency, Research Triangle Park, NC, July 1982.

7. R. D. Cox, et al., "Determination of Low Levels of Total Non-Methane Hydrocarbon Content in Ambient Air", Environ. Sci. Technol., 16 (1):57, 1982.

8. F. F. McElroy, et al., A Cryogenic Preconcentration - Direct FID (PDFID) Method for Measurement of NMOC in the Ambient Air, EPA-600/4-85-063, U.S. Environmental Protection Agency, Research Triangle Park, NC, August 1985.

9. F. W. Sexton, et al., A Comparative Evaluation of Seven Automated Ambient Non-Methane Organic Compound Analyzers, EPA-600/5482-046, U.S. Environmental Protection Agency, Research Triangle Park, NC, August 1982.

10. H. G. Richter, Analysis of Organic Compound Data Gathered During 1980 in Northeast Corridor Cities, EPA-450/4-83-017, U.S. Environmental Protection Agency, Research Triangle Park, NC, April 1983.

11. Cox, R. D. "Sample Collection and Analytical Techniques for Volatile Organics in Air," presented at APCA Speciality Conference, Chicago, Il, March 22-24, 1983.

12. Rasmussen, R. A. and Khalil, M.A.K. " Atmospheric Halocarbons: Measurements and Analyses of Selected Trace Gases," Proc. NATO ASI on Atmospheric Ozone, 1980, 209-231.

13. Oliver, K. D., Pleil J.D. and McClenny, W.A. "Sample Intergrity of Trace Level Volatile Organic Compounds in Ambient Air Stored in "SUMMA®" Polished Canisters," accepted for publication in Atmospheric Environment as of January 1986. Draft available from W. A. McClenny, MD-44, EMSL, EPA, Research Triangle Park, NC 27711.

14. McClenny, W. A. Pleil J.D. Holdren, J.W.; and Smith, R.N.; 1984. " Automated Cryogenic Preconcentration and Gas Chromatographic Determination of Volatile Organic Compounds," Anal. Chem. 56:2947.

15. Pleil, J. D. and Oliver, K. D., 1985, "Evaluation of Various Configurations of Nafion Dryers: Water Removal from Air Samples Prior to Gas Chromatographic Analysis". EPA Contract No. 68-02-4035.

16. Oliver, K. D.; Pleil, and McClenny, W. A.; 1986. "Sample Integrity of Trace Level Volatile Organic Compounds in Ambient Air Stored in Summa® Polished Canisters," Atmospheric Environ. 20:1403.

17. Oliver, K. D. Pleil, J. D., 1985, "Automated Cryogenic Sampling and Gas Chromatographic Analysis of Ambient Vapor-Phase Organic Compounds: Procedures and Comparison Tests," EPA Contract No. 68-02-4035, Research Triangle Park, NC, Northrop Services, Inc. - Environmental Sciences.

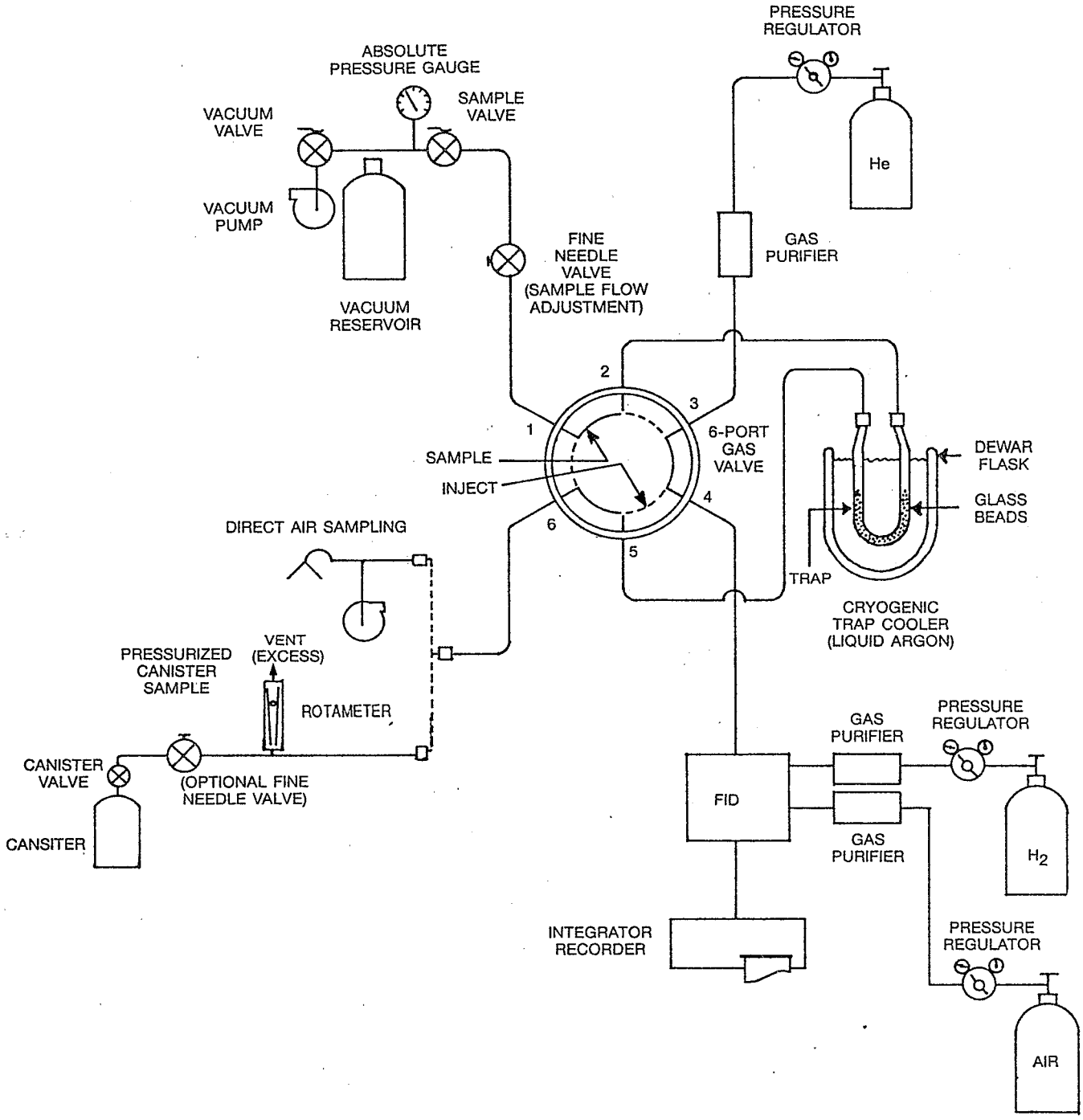

FIGURE 1. SCHEMATIC OF ANALYTICAL SYSTEM FOR NMOC—TWO SAMPLING MODES

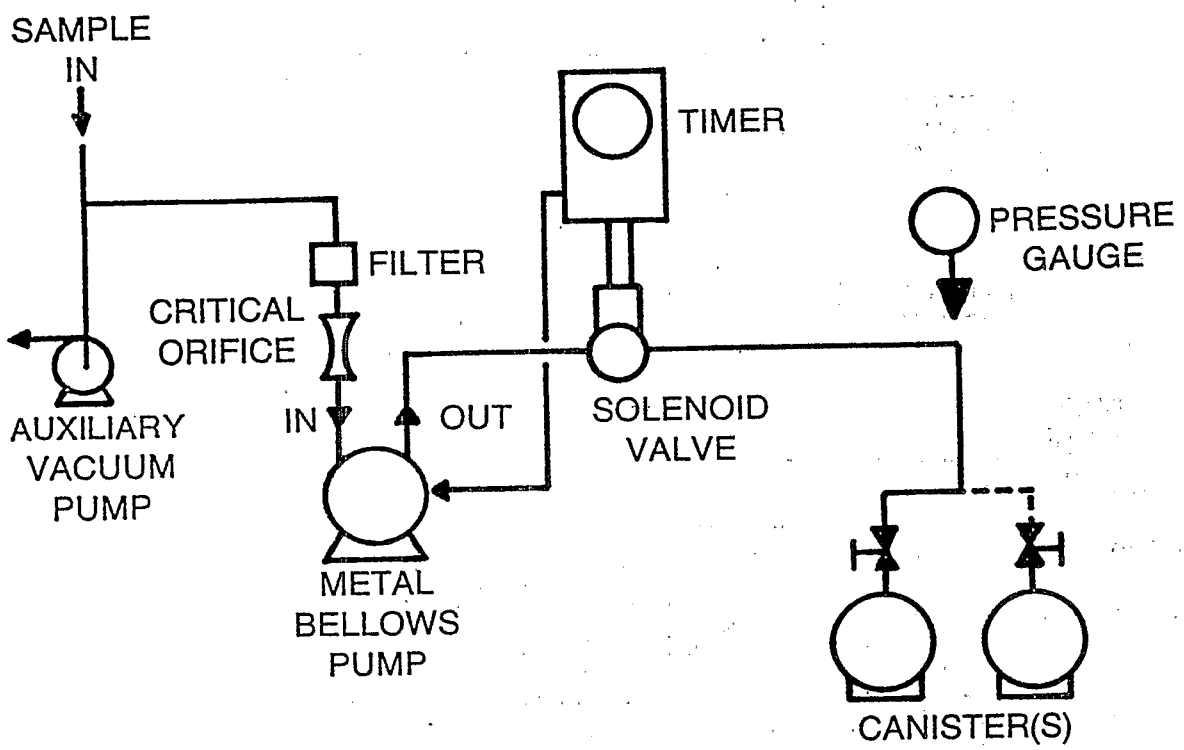

FIGURE 2. SAMPLE SYSTEM FOR AUTOMATIC COLLECTION OF 3-HOUR INTEGRATED AIR SAMPLES

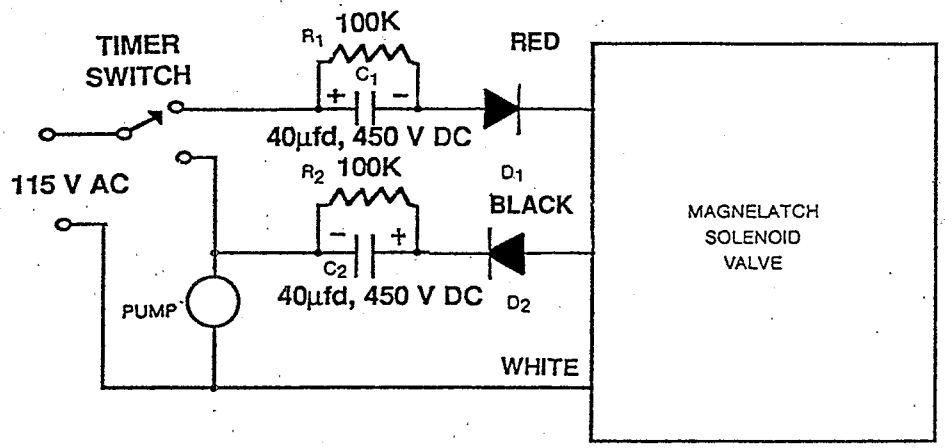

COMPONENTS
Capacitor C_1 and C_2 - 40 uf, 450 VDC (Sprague Atom® TVA 1712 or equivalent)
Resister R_1 and R_2 - 0.5 watt, 5% tolerance
Diode D_1 and D_2 - 1000 PRV, 2.5 A (RCA, SK 3081 or equivalent)

FIGURE 3[a]. SIMPLE CIRCUIT FOR OPERATING MAGNELATCH VALVE

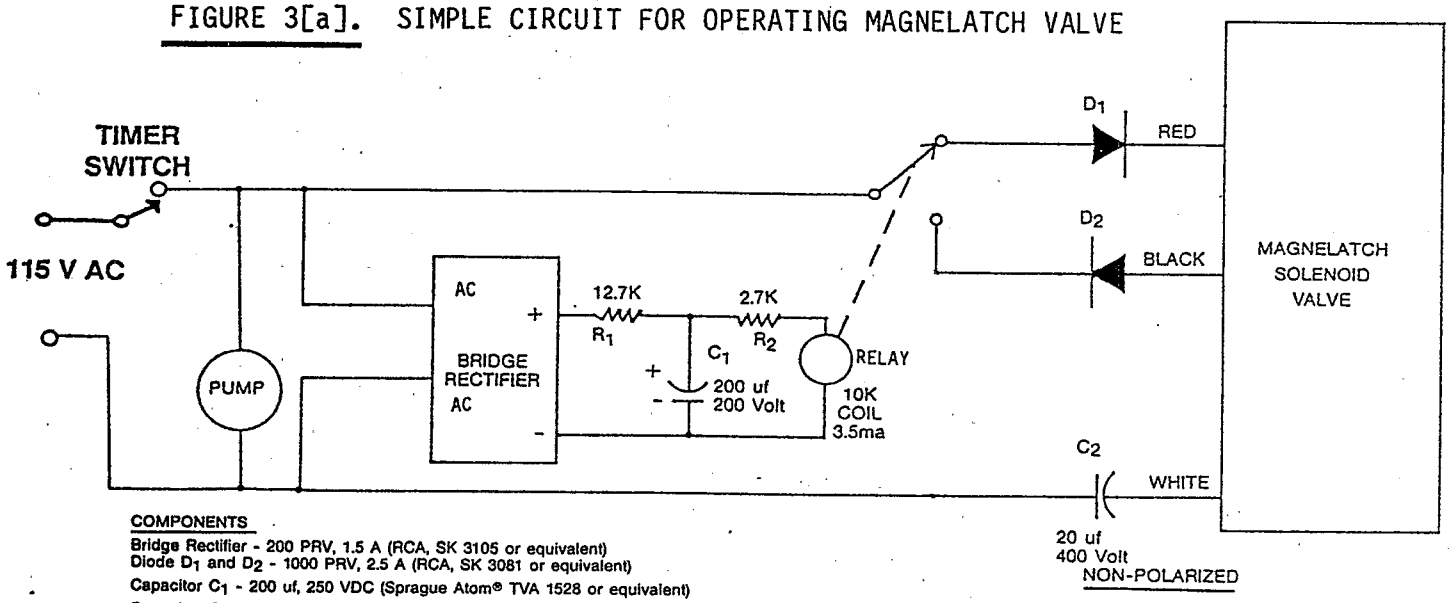

COMPONENTS
Bridge Rectifier - 200 PRV, 1.5 A (RCA, SK 3105 or equivalent)
Diode D_1 and D_2 - 1000 PRV, 2.5 A (RCA, SK 3081 or equivalent)
Capacitor C_1 - 200 uf, 250 VDC (Sprague Atom® TVA 1528 or equivalent)
Capacitor C_2 - 20 uf, 400 VDC Non-Polarized (Sprague Atom® TVAN 1652 or equivalent)
Relay - 10,000 ohm coil, 3.5 ma (AMF Potter and Brumfield, KCP 5, or equivalent)
Resister R_1 and R_2 - 0.5 watt, 5% tolerance

FIGURE 3[b]. IMPROVED CIRCUIT DESIGNED TO HANDLE POWER INTERRUPTIONS

FIGURE 3. ELECTRICAL PULSE CIRCUITS FOR DRIVING SKINNER MAGNELATCH SOLENOID VALVE WITH A MECHANICAL TIMER

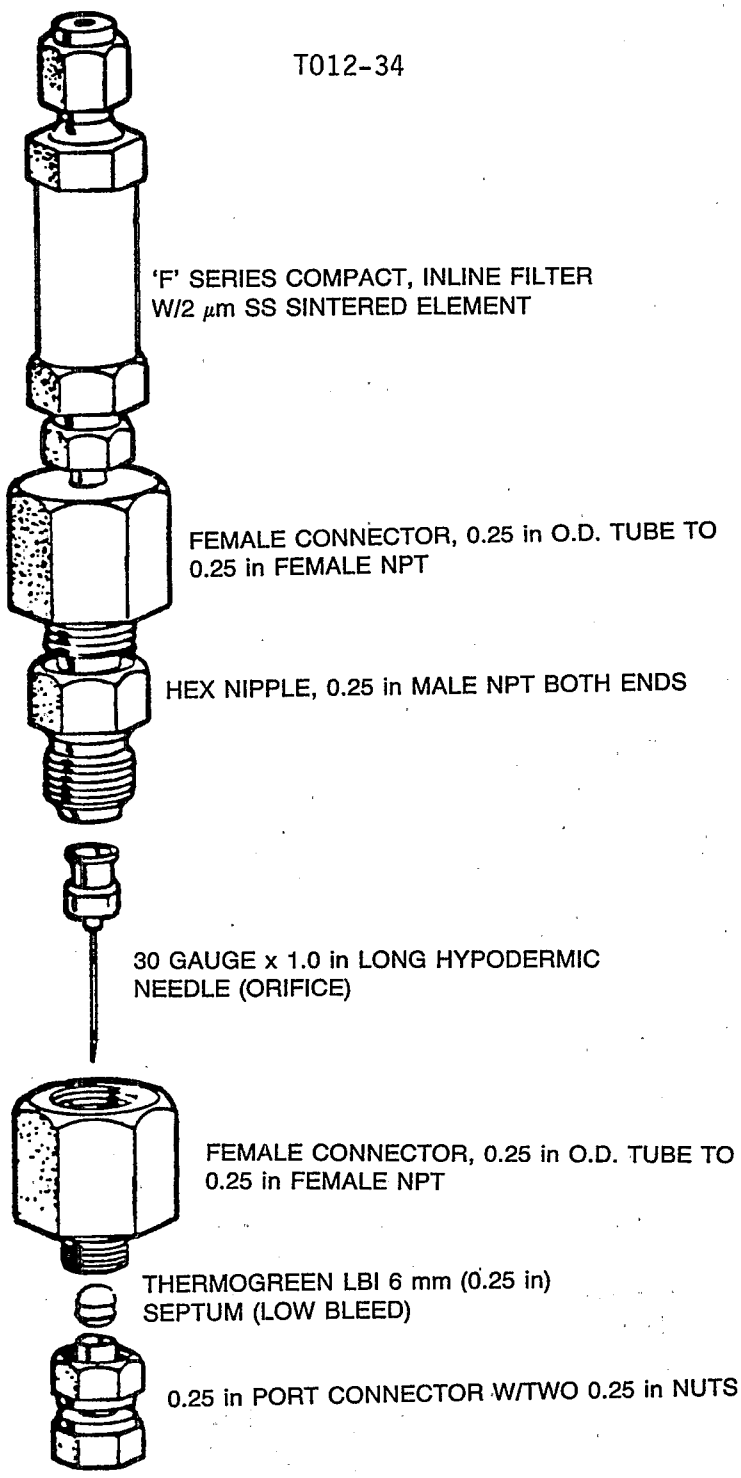

FIGURE 4. FILTER AND HYPODERMIC NEEDLE ASSEMBLY FOR SAMPLE INLET FLOW CONTROL

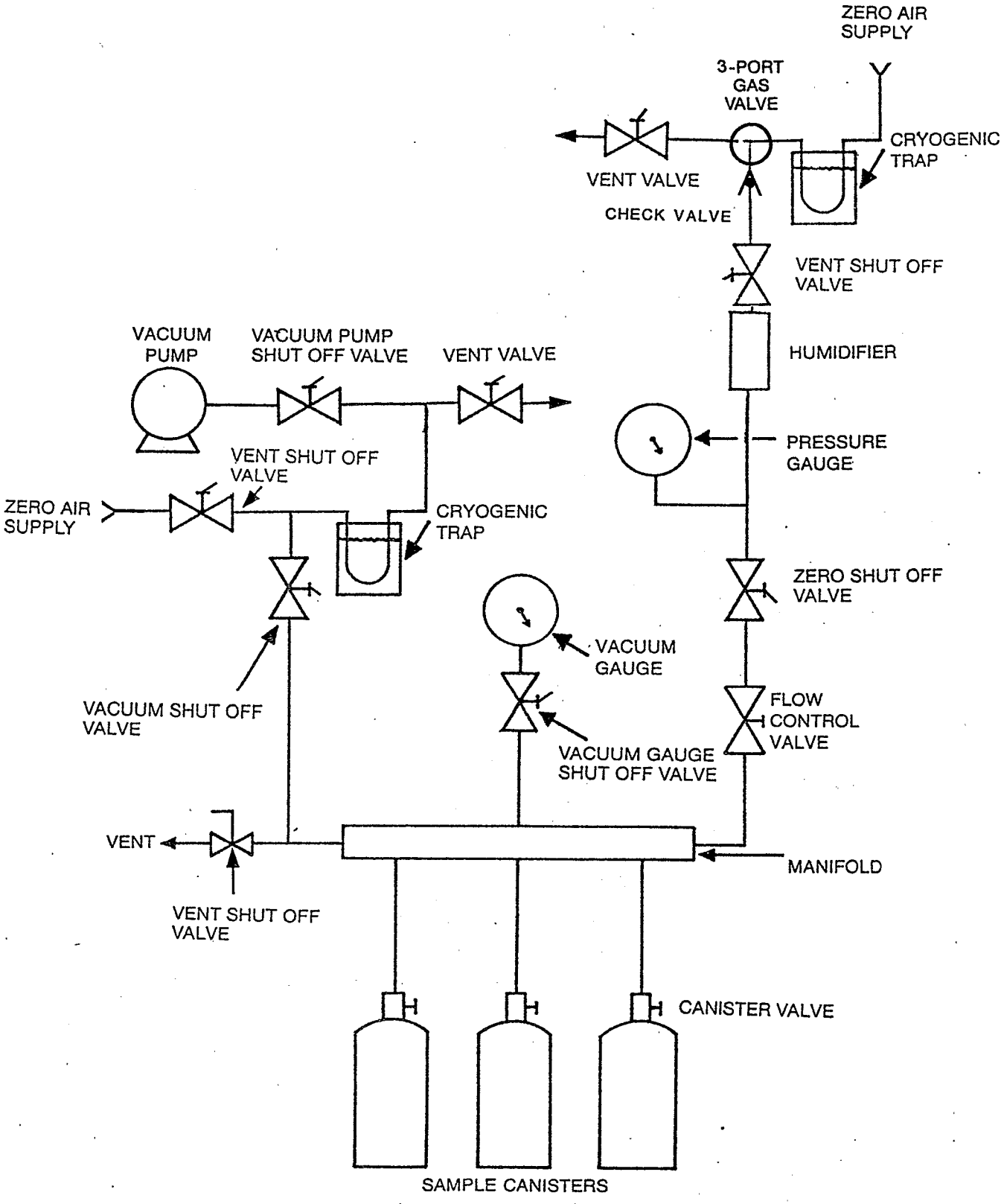

FIGURE 5. CANISTER CLEANING SYSTEM

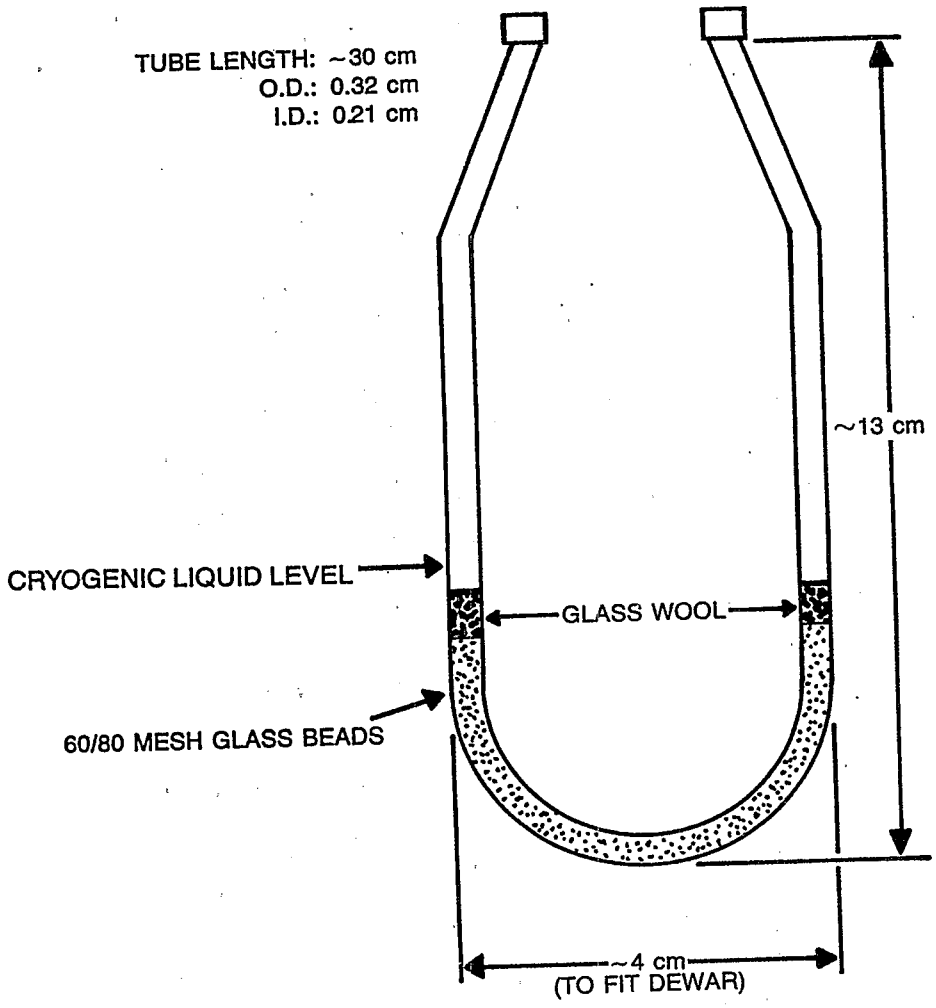

FIGURE 6. CRYOGENIC SAMPLE TRAP DIMENSIONS

PRESSURIZED CANISTER SAMPLING DATA SHEET

GENERAL INFORMATION:

PROJECT: _____
SITE: _____
LOCATION: _____
MONITOR STATION NUMBER: _____
PUMP SERIAL NUMBER: _____

OPERATOR: _____
ORIFICE IDENTIFICATION: _____
FLOW RATE: _____
CALIBRATED BY: _____
LEAK CHECK _____ Pass _____ Fail

FIELD DATA:

Date	Canister Serial Number	Sample Number	Sample Time		Average Atmospheric Conditions			Canister pressure Final, Laboratory		Comments
			Start	Stop	Temperature	Pressure	Relative Humidity			

Date _____ Title _____ Signature _____

T012-37

FIGURE 7. EXAMPLE SAMPLING DATA SHEET

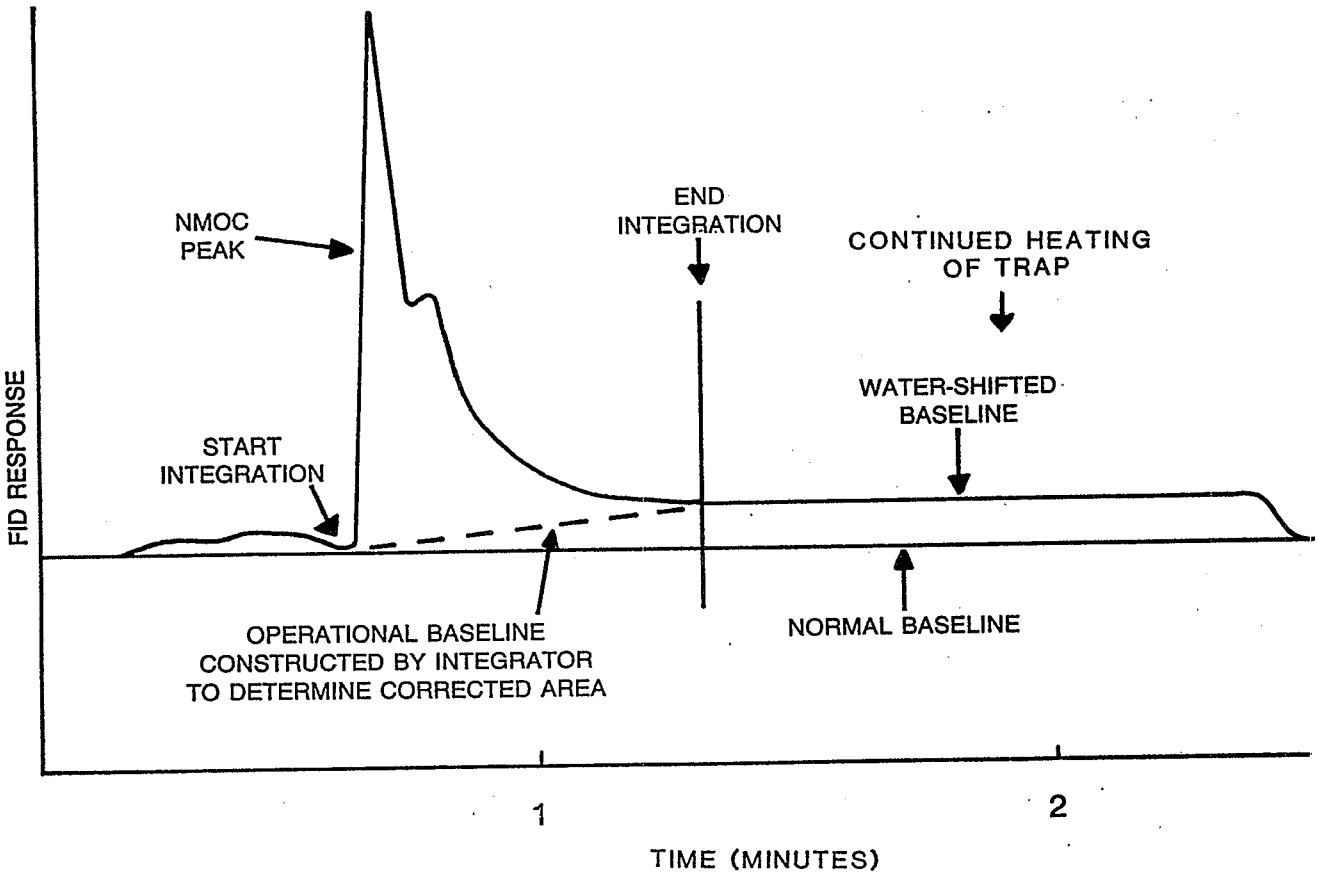

FIGURE 8. **CONSTRUCTION OF OPERATIONAL BASELINE AND CORRESPONDING CORRECTION OF PEAK AREA**

Revision 1.0
June, 1988

METHOD TO-13

THE DETERMINATION OF BENZO(a)PYRENE [B(a)P] AND OTHER POLYNUCLEAR AROMATIC HYDROCARBONS (PAH's) IN AMBIENT AIR USING GAS CHROMATOGRAPHIC (GC) AND HIGH PERFORMANCE LIQUID CHROMATOGRAPHIC (HPLC) ANALYSIS

OUTLINE

1. Scope
2. Applicable Documents
3. Summary of Method
4. Significance
5. Definitions
6. Interferences
7. Safety
8. Apparatus
   - 8.1 Sample Collection
   - 8.2 Sample Clean-up and Concentration
   - 8.3 Sample Analysis
     - 8.3.1 Gas Chromatography with Flame Ionization Detection
     - 8.3.2 Gas Chromatography with Mass Spectroscopy Detection Coupled with Data Processing System (GC/MS/DS)
     - 8.3.3 High Performance Liquid Chromatography System
9. Reagents and Materials
   - 9.1 Sample Collection
   - 9.2 Sample Clean-up and Concentration
     - 9.2.1 Soxhlet Extraction
     - 9.2.2 Solvent Exchange
     - 9.2.3 Column Clean-up
   - 9.3 Sample Analysis
     - 9.3.1 Gas Chromatography Detection
     - 9.3.2 High Performance Liquid Chromatography Detection
10. Preparation of Sampling Filter and Adsorbent
    - 10.1 Sampling Head Configuration
    - 10.2 Glass Fiber Filter Preparation
    - 10.3 XAD-2 Adsorbent Preparation
    - 10.4 PUF Sampling Cartridge Preparation
11. Sample Collection
    - 11.1 Description of Sampling Apparatus
    - 11.2 Calibration of Sampling System
      - 11.2.1 Calibration of Flow Rate Transfer Standard
      - 11.2.2 Initial Multi-point Calibration of High Volume Sampling System Utilizing Flow Rate Transfer Standard
      - 11.2.3 Single Point Audit of the High Volume Sampling System Utilizing Flow Rate Transfer Standard
    - 11.3 Sample Collection
12. Sample Clean-up and Concentration
    - 12.1 Sample Identification
    - 12.2 Soxhlet Extraction and Concentration
    - 12.3 Solvent Exchange
    - 12.4 Sample Clean-up by Solid Phase Exchange and Concentration
      - 12.4.1 Method 610 Clean-up Procedure
      - 12.4.2 Lobar Prepacked Column Procedure

OUTLINE (cont'd)

13. Gas Chromatography (GC) with Flame Ionization (FI) Detection
    - 13.1 Analytical Technique
    - 13.2 Analytical Sensitivity
    - 13.3 Analytical Assembly
    - 13.4 GC Calibration
        - 13.4.1 External Standard Calibration Procedure
        - 13.4.2 Internal Standard Calibration Procedure
    - 13.5 Retention Time Window Determination
    - 13.6 Sample Analysis
        - 13.6.1 Sample Injection
        - 13.6.2 Area Counts and Peak Height
        - 13.6.3 Analyte Identification
        - 13.6.4 Analyte Quantification
14. Gas Chromatography (GC) with Mass Spectroscopy (MS) Detection
    - 14.2 Analytical System
    - 14.2 Operation Parameters
    - 14.3 Calibration Techniques
        - 14.3.1 External Standard Calibration
        - 14.3.2 Internal Standard Calibration
    - 14.4 Sample Analysis
        - 14.4.1 Preliminary Screening by GC/FID
        - 14.4.2 Sample Injection
        - 14.4.3 Area Counts
        - 14.4.4 Analyte Identification
        - 14.4.5 Spectrum Comparison
        - 14.4.6 Analyte Quantification
    - 14.5 GC/MS Performance Tests
        - 14.5.1 Daily DFTPP Tuning
        - 14.5.2 Daily 1-point Initial Calibration Check
        - 14.5.3 12-hour Calibration Verification
15. High Performance Lliquid Chromatography (HPLC) Detection
    - 15.1 Introduction
    - 15.2 Solvent Exchange to Acetonitrile
    - 15.3 HPLC Assembly
    - 15.4 HPLC Calibration
        - 15.4.1 Stock Standard Solution
        - 15.4.2 Storage of Stock Standard Solution
        - 15.4.3 Replacement of Stock Standard Solution
        - 15.4.4 Calibration Standards
        - 15.4.5 Analysis of Calibration Standards
        - 15.4.6 Lingar Response
        - 15.4.7 Daily Calibration
    - 15.5 Sample Analysis
    - 15.6 HPLC System Performance
    - 15.7 HPLC Method Modification
16. Quality Assurance/Quality Control (QA/QC)
    - 16.1 General System QA/QC
    - 16.2 Process, Field and Solvent Blanks
    - 16.3 Gas Chromatography with Flame Ionization Detection
    - 16.4 Gas Chromatography with Mass Spectroscopy Detection
    - 16.5 High Performance Liquid Chromatography Detection

OUTLINE (cont'd)

17. Calculations
    17.1 Sample Volume
    17.2 Sample Concentration
        17.2.1 Gas Chromatography with Flame Ionization Detection
        17.2.2 Gas Chromatography with Mass Spectroscopy Detection
        17.2.3 High Performance Liquid Chromatography Detection
    17.3 Sample Conversion from ng/m^3 to ppbv
18. Bibliography

METHOD TO-13

THE DETERMINATION OF BENZO(a)PYRENE [B(a)P] AND OTHER POLYNUCLEAR AROMATIC HYDROCARBONS (PAHs) IN AMBIENT AIR USING GAS CHROMATOGRAPHIC (GC) AND HIGH PERFORMANCE LIQUID CHROMATOGRAPHIC (HPLC) ANALYSIS

1. Scope

1.1 Polynuclear aromatic hydrocarbons (PAHs) have received increased attention in recent years in air pollution studies because some of these compounds are highly carcinogenic or mutagenic. In particular, benzo[a]pyrene (B[a]P) has been identified as being highly carcinogenic. To understand the extent of human exposure to B[a]P, and other PAHs, a reliable sampling and analytical method has been established. This document describes a sampling and analysis procedure for B[a]P and other PAHs involving a combination quartz filter/adsorbent cartridge with subsequent analysis by gas chromatography (GC) with flame ionization (FI) and mass spectrometry (MS) detection (GC/FI and GC/MS) or high resolution liquid chromatography (HPLC). The analytical methods are a modification of EPA Test Method 610 and 625, Methods for Organic Chemical Analysis of Municipal and Industrial Wastewater, and Methods 8000, 8270, and 8310, Test Methods for Evaluation of Solid Waste.

1.2 Fluorescence methods were among the very first methods used for detection of B[a]P and other PAHs as a carcinogenic constituent of coal tar (1-7). Fluorescent methods are capable of measuring subnanogram quantities of PAHs, but tend to be fairly non-selective. The normal spectra obtained tended to be intense and lacked resolution. Efforts to overcome this difficulty led to the use of ultraviolet (UV) absorption spectroscopy as the detection method coupled with pre-speciated techniques involving liquid chromatography (LC) and thin layer chromatography (TLC) to isolate specific PAHs, particularly B[a]P (8). As with fluorescence spectroscopy, the individual spectra for various PAHs are unique, although portions of spectra for different compounds may be the same. As with fluoresence techniques, the possibility of spectra overlap required complete separation of sample components to insure accurate measurement of component levels. Hence, the use of UV absorption coupled

with pre-speciation involving LC and TLC and fluorescence spectroscopy has declined and is now being replaced with the more sensitive high performance liquid chromatography (9) with UV/fluorescence detection and highly sensitive and specific gas chromatograph with either flame ionization detector or coupled with mass spectroscopy (10-11).

1.3 The choice of GC and HPLC as the recommended procedures for analysis of B[a]P and other PAHs are influenced by their sensitivity and selectivity, along with their ability to analyze complex samples. This method provides for both GC and HPLC approaches to the determination of B[a]P and other PAHs in the extracted sample.

1.4 The analytical methodology is well defined, but the sampling procedures can reduce the validity of the analytical results. Recent studies (12-15) have indicated that non-volatile PAHs (vapor pressure $<10^{-8}$ mm Hg) may be trapped on the filter, but post-collection volatilization problems may distribute the PAHs down stream of the the filter to the back-up adsorbent. A wide variety of adsorbents such as Tenax GC, XAD-2 resin and polyurethane foam (PUF) have been used to sample B[a]P and other PAH vapors. All adsorbents have demonstrated high collection efficiency for B[a]P in particular. In general, XAD-2 resin has a higher collection efficiency (16-17) for volatile PAHs than PUF, as well as a higher retention efficiency. However, PUF cartridges are easier to handle in the field and maintain better flow characteristics during sampling. Likewise, PUF has demonstrated its capability in sampling organochlorine pesticides and polychlorinated biphenyls (Compendium Methods T04 and T010 respectively), and polychlorinated dibenzo-p-dioxins (Compendium Method T09). However, PUF has demonstrated a lower recovery efficiency and storage capability for naphthalene and B[a]P, respectively, than XAD-2. There have been no significant losses of PAHs, up to 30 days of storage at 0°C, using XAD-2. It also appears that XAD-2 resin has a higher collection efficiency for volatile PAHs than PUF, as well as a higher retention efficiency for both volatile and reactive PAHs. Consequently, while the literature cites weaknesses and strengths of using either XAD-2 or PUF, this method covers both the utilization of XAD-2 and PUF as the adsorbent to address post-collection volatilization problems associated with B[a]P and other reactive PAHs.

1.5 This method covers the determination of B[a]P specificially by both GC and HPLC and enables the qualitative and quantitative analysis of the other PAHs. They are:

Acenaphthene
Acenaphthylene
Anthracene
Benzo(a)anthracene
Benzo(a)pyrene
Benzo(b)fluoranthene
Benzo(e)pyrene
Benzo(g,h,i)perylene
Benzo(k)fluoranthene
Chrysene
Dibenzo(a,h)anthracene
Fluoranthene
Fluorene
Indeno(1,2,3-cd)pyrene
Naphthalene
Phenanthrene
Pyrene

The GC and HPLC methods are applicable to the determination of PAHs compounds involving two-member rings or higher. Nitro-PAHs have not been fully evaluated using this procedure; therefore, they are not included in this method. When either of the methods are used to analyze unfamiliar samples for any or all of the compounds listed above, compound identification should be supported by both techniques.

1.6 With careful attention to reagent purity and optimized analytical conditions, the detection limits for GC and HPLC methods range from 1 ng to 10 pg which represents detection of B[a]P and other PAHs in filtered air at levels below 100 pg/m^3. To obtain this detection limit, at least 100 m^3 of air must be sampled.

2. Applicable Documents

2.1 ASTM Standards

2.1.1 Method D1356 - Definitions of Terms Relating to Atmospheric Sampling and Analysis.

2.1.2 Method E260 - Recommended Practice for General Gas Chromatography Procedures.

2.1.3 Method E355 - Practice for Gas Chromatography Terms and Relationships.

2.1.4 Method E682 - Practice for Liquid Chromatography Terms and Relationships.

2.1.5 Method D-1605-60 - Standard Recommended Practices for Sampling Atmospheres for Analysis of Gases and Vapors.

2.2 Other Documents

2.2.1 Existing Procedures (18-25)

2.2.2 Ambient Air Studies (26-28)

2.2.3 U.S. EPA Technical Assistance Document (29-32)

2.2.4 General Metal Works Operating Procedures for Model PS-1 Sampler, General Metal Works, Inc., Village of Cleves, Ohio.

3. Summary of Method

3.1 Filters and adsorbent cartridges (containing XAD-2 or PUF) are cleaned in solvents and vacuum-dried. The filters and adsorbent cartridges are stored in screw-capped jars wrapped in aluminum foil (or otherwise protected from light) before careful installation on a modified high volume sampler.

3.2 Approximately 325 m^3 of ambient air is drawn through the filter and adsorbent cartridge using a calibrated General Metal Works Model PS-1 Sampler, or equivalent (breakthrough has not shown to be a problem with sampling volumes of 325 m^3).

3.3 The amount of air sampled through the filter and adsorbent cartridge is recorded, and the filter and cartridge are placed in an appropriately labeled container and shipped along with blank filter and adsorbent cartridges to the analytical laboratory for analysis.

3.4 The filters and adsorbent cartridge are extracted by Soxhlet extraction with appropriate solvent. The extract is concentrated by Kuderna-Danish (K-D) evaporator, followed by silica gel clean-up using column chromatography to remove potential interferences prior to analysis.

3.5 The eluent is further concentrated by K-D evaporator, then analyzed by either gas chromatograhy equipped with FI or MS detection or high performance liquid chromatography (HPLC). The analytical system is verified to be operating properly and calibrated with five concentration calibration solutions, each analyzed in triplicate.

3.6 A preliminary analysis of the sample extract is performed to check the system performance and to ensure that the samples are within the calibration range of the instrument. If necessary, recalibrate the instrument, adjust the amount of the sample injected, adjust the calibration solution concentration, and adjust the data processing system to reflect observed retention times, etc.

3.7 The samples and the blanks are analyzed and used (along with the amount of air sampled) to calculated the concentratuon of B[a]P in ambient air.

3.8 Other PAHs can be determined both qualitatively and quantitatively through optimization of the GC or HPLC procedures.

4. Significance

4.1 Several documents have been published which describe sampling and analytical approaches for benzo[a]pyrene and other PAHs, as outlined in Section 2.2. The attractive features of these methods have been combined in this procedure. This method has been validated in the laboratory; however, one must use caution when employing it for specific applications.

4.2 The relatively low level of B[a]P and other PAHs in the environment requires use of high volume (~6.7 cfm) sampling techniques to acquire sufficient sample for analysis. However, the volatility of certain PAHs prevents efficient collection on filter media alone. Consequently, this method utilizes both a filter and a backup adsorbent cartridge which provide for efficient collection of most PAHs.

5. Definitions

Definitions used in this document and in any user-prepared standard operating procedures (SOPs) should be consistent with ASTM Methods D1356, D1605-60, E260, and E255. All abbreviations and symbols are defined within this document at point of use.

5.1 Sampling efficiency (SE) - ability of the sampling medium to trap vapors of interest. %SE is the percentage of the analyte of interest colleted and retained by the sampling medium when it is introduced as a vapor in air or nitrogen into the air sampler and the sampler is operated under normal conditions for a period of time equal to or greater than that required for the intended use.

5.2 Retention time (RT) - time to elute a specific chemical from a chromatographic column. For a specific carrier gas flow rate, RT is measured from the time the chemical is injected into the gas stream until it appears at the detector.

5.3 High Performance Liquid Chromatography - an analytical method based on separation of compounds of a liquid mixture through a liquid chromatographic column and measuring the separated components with a suitable detector.

5.4 Gradient elution - defined as increasing the strength of the mobile phase during a chromatographic analysis. The net effect of gradient elution is to shorten the retention time of compounds strongly retained on the analytical column. Gradient elution may be stepwise on continuous.

5.5 Method detection limit (MDL) - the minimum concentration of a substance that can be measured and reported with confidence and that the value is above zero.

5.6 Kuderna-Danish apparatus - the Kuderna-Danish (KD) appartus is a system for concentrating materials dissolved in volatile solvents.

5.7 Reverse phase liquid chromatography - reverse phase liquid chromatography involves a non-polar absorbent (C-18,ODS) coupled with a polar solvent to separate non-polar compounds.

5.8 Guard column - guard columns in HPLC are usually short (5cm) columns attached after the injection port and before the analytial column to prevent particles and strongly retained compounds from accumulating on the analytical column. The guard column should always be the same stationary phase as the analytical column and is used to extend the life of the analytical column.

5.9 MS-SIM - the GC is coupled to a select ion mode (SIM) detector where the instrument is programmed to acquire data for only the target compounds and to disregard all others. This is performed using SIM coupled to retention time discriminators. The SIM analysis procedure provides quantitative results.

5.10 Sublimation - Sublimation is the direct passage of a substance from the solid state to the gaseous state and back into the solid form without at any time appearing in the liquid state. Also applied to the conversion of solid to vapor without the later return to solid state, and to a conversion directly from the vapor phase to the solid state.

5.11 Surrogate standard - A surrogate standard is a chemically inert compound (not expected to occur in the environmental sample) which is added to each sample, blank and matrix spiked sample before extraction and analysis. The recovery of the surrogate standard is used to monitor unusual matrix effects, gross sample processing errors, etc. Surrogate recovery is evaluated for acceptance by determining whether the measured concentration falls within acceptable limits.

5.12 Retention time window - Retention time window is determined for each analyte of interest and is the time from injection to elution of a specific chemical from a chromatographic column. The window is determined by three injections of a single component standard over a 72-hr period as plus or minus three times the standard deviation of the absolute retention time for that analyte.

6. Interferences

6.1 Method interferences may be caused by contaminants in solvents, reagents, glassware, and other sample processing hardware that result in discrete artifacts and/or elevated baselines in the detector profiles. All of these materials must be routinely demonstrated to be free from interferences under the conditions of the analysis by running laboratory reagent blanks.

6.1.1 Glassware must be scrupulously cleaned (33). Clean all glassware as soon as possible after use by rinsing with the last solvent used in it. This should be followed by detergent washing with hot water, and rinsing with tap water and reagent water. It should then be drained dry, solvent rinsed with acetone and spectrographic grade hexane. After drying and rinsing, glassware should be sealed and stored in a clean environment to prevent any accumulation of dust or other contaminants. Glassware should be stored inverted or capped with aluminum foil.

6.1.2 The use of high purity water, reagents and solvents helps to minimize interference problems. Purification of solvents by distillation in all-glass systems may be required.

6.1.3 Matrix interferences may be caused by contaminants that are coextracted from the sample. Additional clean-up by column chromatography may be required (see Section 12.4).

6.2 The extent of interferences that may be encountered using liquid chromatographic techniques has not been fully assessed. Although GC and HPLC conditions described allow for unique resolution of the specific PAH compounds covered by this method, other PAH compounds may interfere. The use of column chromatography for sample clean-up prior to GC or HPLC analysis will eliminate most

of these interferences. The analytical system must, however, be routinely demonstrated to be free of internal contaminants such as contaminated solvents, glassware, or other reagents which may lead to method interferences. A laboratory reagent blank is run for each batch of reagents used to determine if reagents are contaminant-free.

6.3 Although HPLC separations have been improved by recent advances in column technology and instrumentation, problems may occur with baseline noise, baseline drift, peak resolution and changes in sensitivity. Problems affecting overall system performance can arise (34). The user is encouraged to develop a standard operating procedure (SOP) manual specific for his laboratory to minimize problems affecting overall system performance.

6.4 Concern during sample transport and analysis is mentioned. Heat, ozone, NO_2 and ultraviolet (UV) light may cause sample degradation. These problems should be addressed as part of the user prepared standard operating procedure manual. Where possible, incandescent or UV-shield fluorescent lighting should be used during analysis.

7. Safety

7.1 The toxicity or carcinogenicity of each reagent used in this method has not been precisely defined; however, each chemical compound should be treated as a potential health hazard. From this viewpoint, exposure to these chemicals must be reduced to the lowest possible level by whatever means available. The laboratory is responsible for maintaining a current awareness file of Occupational Safety and Health Administration (OSHA) regulations regarding the safe handling of the chemicals specified in this method. A reference file of material data handling sheets should also be made available to all personnel involved in the chemical analysis. Additional references to laboratory safety are available and have been identified for the analyst (35-37).

7.2 Benzo[a]pyrene has been tentatively classified as a known or suspected, human or mammalian carcinogen. Many of the other PAHs have been classified as carcinogens. Care must be exercised when

working with these substances. This method does not purport to address all of the safety problems associated with its use. It is the responsibility of whoever uses this method to consult and establish appropriate safety and health practices and determine the applicability of regulatory limitations prior to use. The user should be thoroughly familiar with the chemical and physical properties of targeted substances (Table 1.0 and Figure 1.0).

7.3 Treat all selective polynuclear aromatic hydrocarbons as carcinogens. Neat compounds should be weighed in a glove box. Spent samples and unused standards are toxic waste and should be disposed according to regulations. Regularly check counter tops and equipment with "black light" for fluorescence as an indicator of contamination.

7.4 Because the sampling configuration (filter and backup adsorbent) has demonstrated greater than 95% collection efficiency for targeted PAHs, no field recovery evaluation will occur as part of this procedure.

8. Apparatus

8.1 Sample Collection

8.1.1 General Metal Works (GMW) Model PS-1 Sampler, or equivalent [General Metal Works, Inc., 145 South Miami Ave., Village of Cleves, Ohio, 45002, (800-543-7412)].

8.1.2 At least two Model PS-1 sample cartridges and filters assembled for PS-1 sampler.

8.1.3 GMW Model PS-1 calibrator and associated equipment - General Metal Works, Inc., Model GMW-40, 145 South Miami Ave., Village of Cleves, Ohio, 45002, (800-543-7412).

8.1.4 Ice chest - to store samples at 0°C after collection.

8.1.5 Data sheets for each sample for recording the location and sample time, duration of sample, starting time, and volume of air sampled.

8.1.6 Airtight, labeled screw-capped container sample cartridges (wide mouth, preferrably glass with Teflon seal or other non-contaminating seals) to hold filter and adsorbent cartridge during transport to analytical laboratory.

8.1.7 Portable Tripod Sampler (optional) - user prepared (38).

8.2 Sample Clean-up and Concentration

8.2.1 Soxhlet extractors capable of extracting GMW Model PS-1 filter and adsorbent cartridges (2.3" x 5" length), 500 mL flask, and condenser.

8.2.2 Pyrex glass tube furnace system for activating silica gel at 180°C under purified nitrogen gas purge for an hour, with capability of raising temperature gradually.

8.2.3 Glass vial, 40 mL.

8.2.4 Erlenmeyer flask, 50 mL - best source. [Note: Reuse of glassware should be minimized to avoid the risk of cross-contamination. All glassware that is used, especially glassware that is reused, must be scrupulously cleaned as soon as possible after use. Rinse glassware with the last solvent used in it and then with high-purity acetone and hexane. Wash with hot water containing detergent. Rinse with copious amount of tap water and several portions of distilled water. Drain, dry, and heat a muffle furnace at 400°C for 2 to 4 hours. Volumetric glassware must not be heated in a muffle furnace; rather, it should be rinsed with high-purity acetone and hexane. After the glassware is dry and cool, rinse it with hexane, and store it inverted or capped with solvent-rinsed aluminum foil in a clean environment.]

8.2.5 Polyester gloves for handling cartridges and filters.

8.2.6 Minivials - 2 mL, borosilicate glass, with conical reservoir and screw caps lines with Teflon-faced silicone disks, and a vial holder.

8.2.7 Stainless steel Teflon® coated spatulas and spoons.

8.2.8 Kuderna-Danish (KD) apparatus - 500 mL evaporation flask (Kontes K-570001-500 or equivalent), 10 mL graduated concentrator tubes (Knotes K-570050-1025 or equivalent) with ground-glass stoppers, and 3-ball macro Snyder Column (Kontes K-5700010500, K-50300-0121, and K-569001-219, or equivalent).

8.2.9 Adsorption columns for column chromatography - 1-cm x 10-cm with stands.

8.2.10 Glove box for working with extremely toxic standards and reagents with explosion-proof hood for venting fumes from solvents, reagents, etc.

8.2.11 Vacuum Oven - Vacuum drying oven system capable of maintaining a vacuum at 240 torr (flushed with nitrogen) overnight.

8.2.12 Concentrator tubes and a nitrogen evaporation apparatus with variable flow rate - best source.

8.2.13 Laboratory refrigerator with chambers operating at 0°C and 4°C.

8.2.14 Boiling chips - solvent extracted, 10/40 mesh silicon carbide or equivalent.

8.2.15 Water bath - heated, with concentric ring cover, capable of temperature control (± 5°C).

8.2.16 Vortex evaporator (optional).

8.3 Sample Analysis

8.3.1 Gas Chromatography with Flame Ionization Detection (FID).

8.3.1.1 Gas chromatography: Analytical system complete with gas chromatography suitable for on-column injections and all required accessories, including detectors, column supplies, recorder, gases, and syringes. A data system for measuring peak areas and/or peak heights is recommended.

8.3.1.2 Packed Column: 1.8-m x 2-mm I.D. glass column packed with 3% OV-17 on Chromosorb W-AW-DMCS (100/120 mesh) or equivalent (Supelco Inc., Supelco Park, Bellefonte, Pa. Supelco SPB-5).

8.3.1.3 Capillary Column: 30-m x 0.25-mm ID fused silica column coated with 0.25 u thickness 5% phenyl, 90% methyl siloxane (Supelco Inc., Supelco Park, Bellefonte, Pa.).

8.3.1.4 Detector: Flame Ionization (FI)

8.3.2 Gas Chromatograph with Mass Spectroscopy Detection Coupled with Data Processing System (GC/MS/DS).

8.3.2.1 The GC must be equipped for temperature programming, and all required accessories must be available, including syringes, gases, and a capillary column. The GC injection port must be designed for capillary columns. The use of splitless injection techniques is recommended. On-column injection techniques can be used but they may severely reduce column lifetime for nonchemically bonded columns. In this protocol, a 1-3 uL injection volume is used consistently. With some GC injection ports, however, 1 uL injections may produce some improvement in precision and chromatographic

8.3.3.2 Guard column - 5-cm guard column pack with Vydac reverse phase C-18 material.

8.3.3.3 Reverse phase analytical column - Vydac or equivalent, C-18 bonded phase RP column (The Separation Group, P.O. Box 867, Hesperia, Ca., 92345), 4.6-mm x 25-cm, 5-micron particle diameter.

8.3.3.4 LS-4 fluorescence spectrometer, Perkin Elmer, sepa-ate excitation and emission, monochromator positioned by separate microprocessor-controlled flow cell and wavelength programming ability (optional).

8.3.3.5 Ultraviolet/visible detector, Spectra Physics 8440, deuterium Lamp, capable of programmable wavelengths (optional).

8.3.3.6 Dual channel Spectra Physics 4200 Computing Integra-tor, measures peak areas and retention times from recorded chromatographs. IBM PC XT will Spectra Physics Labnet system for data collection and storage (optional).

9. Reagents and Materials

9.1 Sample Collection

9.1.1 Acid-washed quartz fiber filter - 105 mm micro quartz fiber binderless filter (General Metal Works, Inc., Cat. No. GMW QMA-4, 145 South Miami Ave., Village of Cleves, Ohio, 45002 [800-543-7412] or Supelco Inc., Cat. No. 1-62, Supelco Park, Bellefonte, PA, 16823-0048).

9.1.2 Polyurethane foam (PUF) - 3 inch thick sheet stock, polyether type (density 0.022 g/cm^3) used in furniture upholstering (General Metal Works, Inc., Cat. No. PS-1-16, 145 South Miami Ave., Village of Cleves, Ohio, 45002 [800-543-7412] or Supelco Inc., Cat. No. 1-63, Supelco Park, Bellefonte, PA, 16823-0048).

9.1.3 XAD-2 resin - Supelco Inc., Cat. No. 2-02-79, Supelco Park, Bellefonte, PA, 16823-0048.

9.1.4 Hexane-rinsed aluminum foil - best source.

9.1.5 Hexane-reagent grade, best source.

9.2 Sample Clean-up and Concentration

9.2.1 Soxhlet Extraction

9.2.1.1 Methylene chloride - chromatographic grade, glass-distilled, best source.

9.2.1.2 Sodium sulfate, anhydrous - (ACS) granular anhydrous (purified by washing with methylene chloride followed by heating at 400°C for 4 hrs in a shallow tray).

9.2.1.3 Boiling chips - solvent extracted, approximately 10/40 mesh (silicon carbide or equivalent).

9.2.1.4 Nitrogen - high purity grade, best source.

9.2.1.5 Ether - chromatographic grade, glass-distilled, best source.

9.2.1.6 Hexane - chromatographic grade, glass-distilled, best source.

9.2.1.7 Dibromobiphenyl - chromatographic grade, best source. Used for internal standard.

9.2.1.8 Decafluorobiphenyl - chromatographic grade, best source. Used for internal standard.

9.2.2 Solvent Exchange

9.2.2.1 Cyclohexane - chromatographic grade, glass-distilled, best source.

9.2.3 Column Clean-up

Method 610

9.2.3.1 Silica gel - high purity grade, type 60, 70-230 mesh; extracted in a Soxhlet apparatus with methylene chloride for 6 hours (minimum of 3 cycles per hour) and activated by heating in a foil-covered glass container for 24 hours at 130°C.

9.2.3.2 Sodium sulfate, anhydrous - (ACS) granular anhydrous (See Section 9.2.1.2).

9.2.3.3 Pentane - chromatographic grade, glass-distilled, best source.

Lobar Prepacked Column

9.2.3.4 Silica gel lobar prepacked column - E. Merck, Darmstadt, Germany [Size A(240-10) Lichroprep Si (40-63 um)].

9.2.3.5 Precolumn containing sodium sulfate - American Chemical Society (ACS) granular anhydrous (purified by washing with methylene chloride followed by heating at 400°C for 4 hours in a shallow tray).

9.2.3.6 Hexane - chromatographic grade, glass-distilled, best source.

9.2.3.7 Methylene chloride - chromatographic grade, glass-distilled, best source

9.2.3.8 Methanol - chromatographic grade, glass-distilled, best source.

9.3 Sample Analysis

9.3.1 Gas Chromatography Detection

9.3.1.1 Gas cylinders of hydrogen and helium - ultra high purity, best source.

9.3.1.2 Combustion air - ultra high purity, best source.

9.3.1.3 Zero air - Zero air may be obtained from a cylinder or zero-grade compressed air scrubbed with Drierite® or silica gel and 5A molecular sieve or activated charcoal, or by catalytic cleanup of ambient air. All zero air should be passed through a liquid argon cold trap for final cleanup.

9.3.1.4 Chromatographic-grade stainless steel tubing and stainless steel plumbing fittings - for interconnections. [Alltech Applied Science, 2051 Waukegan Road, Deerfield, IL, 60015, (312) 948-8600]. [Note: All such materials in contact with the sample, analyte, or support gases prior to analysis should be stainless steel or other inert metal. Do not use plastic or Teflon® tubing or fittings.]

9.3.1.5 Native and isotopically labeled PAHs isomers for calibration and spiking standards-[Cambridge Isotopes, 20 Commerce Way, Woburn, MA, 01801 (617-547-1818)]. Suggested isotopically labeled PAH isomers are:

- o perylene - d_{12}
- o chrysene - d_{12}
- o acenaphthene - d_{10}
- o naphthalene - d_8
- o phenanthrene - d_{10}

9.3.1.6 Decafluorotriphenylphosphine (DFTPP) - best source, used for tuning GC/MS.

9.3.2 High Performance Liquid Chromatography Detection

9.3.2.1 Acetonitrile - chromatographic grade, glass-distilled, best source.

9.3.2.2 Boiling chips - solvent extracted, approximatley 10/40 mesh (silicon carbide or equivalent).

9.3.2.3 Water - HPLC Grade. Water must not have an interference that is observed at the minimum detectable limit (MDL) of each parameter of interest.

9.3.2.4 Decafluorobiphenyl - HPLC grade, best source (used for internal standard).

10. Preparation of Sample Filter and Adsorbent

10.1 Sampling Head Configuration

10.1.1 The sampling head (Figure 2) consist of a filter holder compartment followed by a glass cartridge for retaining the adsorbent.

10.1.2 Before field use, both the filter and adsorbent must be cleaned to <10 ng/apparatus of B[a]P or other PAHs.

10.2 Glass Fiber Filter Preparation

10.2.1 The glass fiber filters are baked at 600°C for five hours before use. To insure acceptable filters, they are extracted with methylene chloride in a Soxhlet apparatus, similar to the cleaning of the XAD-2 resin (see Section 10.3).

10.2.2 The extract is concentrated and analyzed by either GC or HPLC. A filter blank of <10 ng/filter of B[a]P or other PAHs is considered acceptable for field use.

10.3 XAD-2 Adsorbent Preparation

10.3.1 For initial cleanup of the XAD-2, a batch of XAD-2 (approximately 60 grams) is placed in a Soxhlet apparatus [see Figure 3(a)] and extracted with methylene chloride for 16 hours at approximately 4 cycles per hour.

10.3.2 At the end of the initial Soxhlet extraction, the spent methylene chloride is discarded and replaced with fresh reagent. The XAD-2 resin is once again extracted for 16 hours at approximately 4 cycles per hour.

10.3.3 The XAD-2 resin is removed from the Soxhlet apparatus, places in a vacuum oven connected to an ultra-purge nitrogen gas stream and dries at room temperature for approximately 2-4 hours (until no solvent odor is detected).

10.3.4 A nickel screen (mesh size 200/200) is fitted to the bottom of a hexane-rinsed glass cartridge to retain the XAD-2 resin.

10.3.5 The Soxhlet extracted/vacuum dried XAD-2 resin is placed into the sampling cartridge (using polyester gloves) to a depth of approximately 2 inches. This should require approximately 55 grams of adsorbent.

10.3.6 The glass module containing the XAD-2 adsorbent is wrapped with hexane-rinsed aluminum foil, placed in a labeled container and tightly sealed with Teflon® tape.

10.3.7 At least one assemble cartridge from each batch must be analyzed, as a laboratory blank, using the procedures described in Section 13, before the batch is considered acceptable for field use. A blank of <10 ng/cartridge of B[a]P on other PNA's is considered acceptable.

10.4 PUF Sampling Cartridge Preparation

10.4.1 The PUF adsorbent is a polyether-type polyurethane foam (density No. 3014 or 0.0225 g/cm^3) used for furniture upholstery.

10.4.2 The PUF inserts are 6.0-cm diameter cylindrical plugs cut from 3-inch sheet stock and should fit, with slight compression, in the glass cartridge, supported by the wire screen (see Figure 1). During cutting, the die is rotated at high speed (e.g., in a drill press) and continuously lubricated with water.

10.4.3 For initial cleanup, the PUF plug is placed in a Soxhlet apparatus [see Figure 3(a)] and extracted with acetone for 14-24 hours at approximately 4 cycles per hour. [Note: When cartridges are reused, 5% diethyl ether in n-hexane can be used as the cleanup solvent.]

10.4.4 The extracted PUF is placed in a vacuum oven connected to a water aspirator and dried at room temperature for approximately 2-4 hours (until no solvent odor is detected)

10.4.5 The PUF is placed into the glass sampling cartridge using polyester gloves. The module is wrapped with hexane-rinsed aluminum foil, placed in a labeled container, and tightly sealed.

10.4.6 At least one assembled cartridge from each batch must be analyzed, as a laboratory blank, using the procedures described in Section 13, before the batch is considered acceptable for field use. A blank level of <10 ng/plug for single compounds is considered to be acceptable.

11. Sample Collection

11.1 Description of Sampling Apparatus

11.1.1 The entire sampling system can be a modification of a traditional high volume sampler (see Figure 4) or a portable sampler (see Figure 5). A unit specifically designed for this method is commercially available (Model PS-1 - General Metal Works, Inc., Village of Cleves, Ohio).

11.1.2 The sampling module consists of a glass sampling cartridge and an air-tight metal cartridge holder, as outlined in Section 10.1. The adsorbent (XAD-2 or PUF) is retained in the glass sampling cartridge.

11.2 Calibration of Sampling System

Each sampler is to be calibrated: 1) when new; 2) after major repairs or maintenance; 3) whenever any audit point deviates from the calibration curve by more than 7%; 4) when a different sample collection media, other than that which the sampler was originally calibrated to, will be used for sampling; or 5) at the frequency specified in the user Standard Operating Procedure (SOP) manual in which the samplers are utilized.

11.2.1 Calibration of Flow Rate Transfer Standard

Calibration of the modified high volume air sampler in the field is performed using a calibrated orifice flow rate transfer standard. The flow rate transfer standard must be certified in the laboratory against a positive displacement rootsmeter (see Figure 6). Once certified, the recertification is performed rather infrequently if the orifice is protected from damage. Recertification of the orifice flow rate transfer standard is performed once per year utilizing a set of five (5) multihole resistance plates. [Note: The 5 multihole resistance plates are used to change the flow through the orifice so that several points can be obtained for the orifice calibration curve.]

11.2.1.1 Record the room temperature (t_1 in °C) and barometric pressure (P_b in mm Hg) on Orifice Calibration Data Sheet (see Figure 7). Calculate the room temperature in °K (absolute temperature) and record on Orifice Calibration Data Sheet.

$$t_1 \text{ in K} = 273° + t_1 \text{ in °C}$$

11.2.1.2 Set up laboratory orifice calibration equipment as illustrated in Figure 6. Check the oil level of the rootsmeter prior to starting. There are three oil level indicators, one at the clear plastic end, and two sight glasses, one at each end of the measuring chamber.

11.2.1.3 Check for leaks by clamping both manometer lines blocking the orifice with cellophane tape, turning on the high volume motor, and noting any change in the rootsmeter's reading. If the rootsmeter's reading changes, then there is a leak in the system or in the tape. Eliminate the leak before proceeding. If the rootsmeter's reading remains constant, turn off the hi-vol motor, remove the cellophane tape, and unclamp both manometer lines.

11.2.1.4 Install the 5-hole resistance plate between the orifice and the filter adapter.

11.2.1.5 Turn manometer tubing connectors one turn counterclockwise. Make sure all connectors are open.

11.2.1.6 Adjust both manometer midpoints by sliding their movable scales until the zero point corresponds with the bottom of the meniscus. Gently shake or tap to remove any air bubbles and/or liquid remaining on tubing connectors. (If additional liquid is required for the water manometer, remove tubing connector and add clean water).

11.2.1.7 Turn on the hi-vol motor and let it run for five minutes to set the motor brushes.

11.2.1.8 Record both manometer readings-orifice water manometer (ΔH) and rootsmeter mercury manometer (ΔP). [Note: ΔH is the sum of the difference from zero (0) of the two column heights.]

11.2.1.9 Record the time, in minutes, required to pass a known volume of air (approximately 200-300 ft^3 of air for each resistance plate) through the rootsmeter by using the rootsmeter's digital volume dial and a stopwatch.

11.2.1.10 Turn off the high volume motor.

11.2.1.11 Replace the 5-hole resistance plate with the 7-hole resistance plate.

11.2.1.12 Repeat Sections 11.2.1.3 through 11.2.1.10.

11.2.1.13 Repeat for each resistance plate. Note results on Orifice Calibration Data Sheet (see Figure 7). Only a minute is needed for warm-up of the motor. Be sure to tighten the orifice enough to eliminate any leaks. Also check the gaskets for cracks. [Note: The placement of the orifice prior to the rootsmeter causes the pressure at the inlet of the rootsmeter to be reduced below atmospheric conditions, thus causing the measured volume to be incorrect. The volume measured by the rootsmeter must be corrected.]

11.2.1.14 Correct the measured volumes with the following formula and record the standard volume on the Orifice Calibration Data Sheet:

$$V_{std} = V_m \frac{P_1 - \Delta P}{P_{std}} \frac{T_{std}}{T_1}$$

where: V_{std} = standard volume (std m^3).

V_m = actual volume measured by the rootsmeter (m^3).

P_1 = barometric pressure during calibration (mm Hg).

ΔP = differential pressure at inlet to volume meter (mm Hg).

P_{std} = 760 mm Hg.

T_{std} = 298 K.

T_1 = ambient temperature during calibration (K).

11.2.1.15 Record standard volume on Orifice Calibration Data Sheet.

11.2.1.16 The standard flow rate as measured by the rootsmeter can now be calculated using the following formula:

$$Q_{std} = \frac{V_{std}}{\theta}$$

where: Q_{std} = standard volumetric flow rate, std m3/min.

θ = elapsed time, min.

11.2.1.17 Record the standard flow rates to the nearest 0.01 std m^3/min.

11.2.1.18 Calculate and record $\sqrt{\Delta H(P_1/P_{std})\ (298/T_1)}$ value for each standard flow rate.

11.2.1.19 Plot each $\sqrt{\Delta H(P_1/P_{std})\ (298/T_1)}$ value (y-axis) versus its associated standard flow rate (x-axis) on arithmetic graph paper, draw a line of best fit between the individual plotted points and calculate the linear regression slope (M) and intercept (b).

11.2.1.20 Commercially available calibrator kits are available [General Metal Works Inc., Model GMW-40, 145 South Miami Avenue, Village of Cleves, Ohio, 45002 (1-800-543-7412)].

11.2.2 Calibration of The High Volume Sampling System Utilizing Calibrated Multi-point Flow Rate Transfer Standard

11.2.2.1 The airflow through the sampling system can be monitored by a venturi/magnehelic assembly, as illustrated in Figure 4 or by a u-tube assembly connected to the high volume portable design as illustrated in Figure 5. The field sampling system must be audited every six months using a flow rate transfer standard, as described in the U.S. EPA High Volume Sampling Method, 40 CFR 50, Appendix B. A single-point calibration must be performed before and after each sample collection, using a transfer standard calibrated as described in Section 11.2.1.

11.2.2.2 Prior to initial multi-point calibration, a "dummy" adsorbent cartridge and filter are placed in the sampling head and the sampling motor is activated. The flow control valve is fully opened and the voltage variator is adjusted so that a sample flow rate corresponding to 110% of the desired flow rate (typically 0.20 - 0.28 m^3/min) is indicated on the Magnehelic gauge (based on the previously obtained multi-point calibration curve). The

motor is allowed to warm up for 10 minutes and then the flow control valve is adjusted to achieve the desired flow rate. Turn off the sampler. The ambient temperature and barometric pressure should be recorded on the Field Calibration Data Sheet (Figure 9).

11.2.2.3 The flow rate transfer standard is placed on the sampling head, and a manometer is connected to the tap on the transfer standard using a length of tubing. Properly align the retaining rings with filter holder and secure by tightening the three screw clamps. Set the zero level of the manometer. Attach the magnehelic gage to the sampler venturi quick release connections. Adjust the zero (if needed) using the zero adjust screw on the face of the gage.

11.2.2.4 Turn the flow control valve to the fully open position and turn the sampler on. Adjust the flow control valve until a magnehelic reading of approximately 70 in. is obtained. Allow the magnehelic and manometer readings to stabilize and record these values.

11.2.2.5 Adjust the flow control valve and repeat until six or seven uniformally spaced magnehelic readings are recorded spanning the range of approximately 40-70 in. Record the readings on the Field Calibration Data Sheet (see Figure 9). [Note: Use of some filter/sorbent media combinations may restrict the airflow resulting in a maximum magnehelic reading of 60 in. or less. In such cases, a variable transformer should be placed in-line between the 110 volt power source and the sampler so that the line voltage can be increased sufficiently to obtain a maximum magnehelic reading approaching 70 in.].

11.2.2.6 Adjust the orifice manometer reading for standard temperature and pressure using the following equation:

$$X = \sqrt{\Delta H \frac{P_a}{P_{std}} \frac{T_{std}}{T_a}}$$

where: X = adjusted manometer reading to standard temperature and pressure (in. water).

ΔH = observed manometer reading (in water).

P_a = current barometric pressure (mm Hg).

P_{std} = 760 mm Hg.

T_a = current temperature (K), (K = °C + 273).

T_{std} = standard temperature (298 K).

11.2.2.7 Calculate the standard flow rate for each corrected manometer reading by the following equation:

$$Q_{std} = \frac{X - b}{M}$$

where:

Q_{std} = standard flow rate (m^3/min).

M = slope of flow rate transfer standard calibration curve.

X = corrected manometer reading from 11.2.2.6 (in water).

b = intercept of flow rate transfer standard calibration curve.

11.2.2.8 Adjust the magnehelic gage readings to standard temperature and pressure using the following equation:

$$M_{std} = \sqrt{\frac{(M)(P_a)}{P_{std}} \quad \frac{T_{std}}{T_a}}$$

where:

M_{std} = adjusted magnehelic reading to standard temperature and pressure (inches of water).

M = observed magnehelic reading (inches of water).

P_a = ambient atmospheric pressure (mm Hg).

P_{std} = standard pressure (760 mm Hg).

T_a = ambient temperature (K), (K = °C + 273).

T_{std} = standard temperature (298 K).

11.2.2.9 Plot each M_{std} value (y-axis) versus its associated Q_{std} standard (x-axis) on arithmetic graph paper. Draw a line of best fit between the individual plotted points. This is the calibration curve for the venturi. Retain with sampler.

11.2.2.10 Record the corresponding Q_{std} for each M_{std} under Q_{std} column on Field Calibration Data Sheet, Figure 9.

11.2.3 Single-point Audit of The High Volume Sampling System Utilizing Calibrated Flow Rate Transfer Standard

11.2.3.1 A single point flow audit check is performed before and after each sampling period utilizing the Calibration Flow Rate Transfer Standard (Section 11.2.1).

11.2.3.2 Prior to single point audit, a "dummy" adsorbent cartridge and filter are placed in the sampling head and the sampling motor is activated. The flow control valve is fully opened and the voltage variator is adjusted so that a

sample flow rate corresponding to 110% of the desired flow rate (typically 0.20-0.28 m^3/min) is indicated on the magnehelic gauge (based on the previously obtained multi-point calibration curve). The motor is allowed to warm up for 5 minutes and then the flow control valve is adjusted to achieve the desired flow rate. Turn off the sampler. The ambient temperature and barometric pressure should be recorded on a Field Test Data Sheet (Figure 10).

11.2.3.3 The flow rate transfer standard is placed on the sampling head.

11.2.3.4 Properly align the retaining rings with filter holder and secure by tightening the three screw clamps.

11.2.3.5 Using tubing, attach one manometer connector to the pressure tap of the transfer standard. Leave the other connector open to the atmosphere.

11.2.3.6 Adjust the manometer midpoint by sliding the movable scale until the zero point corresponds with the water meniscus. Gently shake or tap to remove any air bubbles and/or liquid remaining on tubing connectors. (If additional liquid is required, remove tubing connector and add clean water.)

11.2.3.7 Turn on high volume motor and let run for five minutes.

11.2.3.8 Record the pressure differential indicated, ΔH, in inches of water. Be sure stable ΔH has been established.

11.2.3.9 Record the observed magnehelic gauge reading, in inches of water. Be sure stable M has been established.

11.2.3.10 Using previously established Flow Rate Transfer Standard curve, calculate Q_{std} (see steps 11.2.2.6 - 11.2.2.7).

11.2.3.11 Using previously established venturi calibration curve, calculate the indicated Q_{std} (Section 11.2.2.9).

11.2.3.12 A multi-point calibration of the Flow Rate Transfer Standard against a primary standard, must be obtained annually, as outlined in Section 11.2.1.

11.2.3.13 Remove Flow Rate Transfer Standard and dummy adsorbent cartridge and filter assembly.

11.3 Sample Collection

11.3.1 After the sampling system has been assembled and flow checked as described in Sections 11.1 and 11.2, it can be used to collect air samples, as described in Section 11.3.2.

11.3.2 The samples should be located in an unobstructed area, at least two meters from any obstacle to air flow. The exhaust hose should be stretched out in the downwind direction to prevent recycling of air into the sample head.

11.3.3 With the empty sample module removed from the sampler, rinse all sample contact areas using reagent grade hexane in a Teflon® squeeze bottle. Allow the hexane to evaporate from the module before loading the samples.

11.3.4 Detach the lower chamber of the rinsed sampling module. While wearing disposable clean lint-free nylon or powder-free surgical gloves, remove a clean glass cartridge/sorbent from its container (wide mouthed glass jar with a Teflon®-lined lid) and unwrap its aluminum foil covering. The foil should be replaced back in the sample container to be re-used after the sample has been collected.

11.3.5 Insert the cartridge into the lower chamber and tightly reattach it to the module.

11.3.6 Using clean Teflon® tipped forceps, carefully place a clean fiber filter atop the filter holder and secure in place by clamping the filter holder ring over the filter using the three screw clamps. Insure that all module connections are tightly assembled. [Note: Failure to do so

could result in air flow leaks at poorly sealed locations which could affect sample representativeness]. Ideally, sample module loading and unloading should be conducted in a controlled environment or at least a centralized sample processing area so that the sample handling variables can be minimized.

11.3.7 With the module removed from the sampler and the flow control valve fully open, turn the pump on and allow it to warm-up for approximately 5 minutes.

11.3.8 Attach a "dummy" sampling module loaded with the exact same type of filter and sorbent media as that which will be used for sample collection.

11.3.9 With the sampler off, attach the Magnahelic gage to the sampler. Turn the sampler on and adjust the flow control valve to the desired flow (normally as indicated by the cfm) magnahelic gauge reading and reference by the calibration chart. [Note: Breakthrough has not been a problem for all PAHs outlined in Section 1.5 using this sampling method except anthracene and penanthrene]. Once the flow is properly adjusted, extreme care should be taken not to inadvertantly alter its setting.

11.3.10 Turn the smpler off and remove both the "dummy" module and the Magnahelic gauge. The sampler is now ready for field use.

11.3.11 The zero reading of the sampler Magnehelic is checked. Ambient temperature, barometric pressure, elapsed time meter setting, sampler serial number, filter number, and adsorbent sample number are recorded on the Field Test Data Sheet (see Figure 10). Attach the loaded sampler module to the sampler.

11.3.12 The voltage variator and flow control valve are placed at the settings used in Section 11.2.2, and the power switch is turned on. The elapsed time meter is activated and the start time is recorded. The flow (Magnehelic setting) is adjusted, if necessary, using the flow control valve.

11.3.13 The Magnehelic reading is recorded every six hours during the sampling period. The calibration curve

(Section 11.2.4) is used to calculate the flow rate. Ambient temperature, barometric pressure, and Magnehelic reading are recorded at the beginning and end of the sampling period.

11.3.14 At the end of the desired sampling period, the power is turned off. Carefully remove the sampling head containing the filter and adsorbent cartridge to a clean area.

11.3.15 While wearing disposable lint free nylon or surgical gloves, remove the sorbent cartridge from the lower module chamber and lay it on the retained aluminum foil in which the sample was originally wrapped.

11.3.16 Carefully remove the glass fiber filter from the upper chamber using clean Teflon® tiped forceps.

11.3.17 Fold the filter in half twice (sample side inward) and place it in the glass cartridge atop the sorbent.

11.3.18 Wrap the combined samples in aluminum foil and place them in their original glass sample container. A sample label should be completed and affixed to the sample container. Chain-of-custody should be maintained for all samples.

11.3.19 The glass containers should be stored in ice and protected from light to prevent possible photo-decomposition of collected analytes. If the time span between sample collection and laboratory analysis is to exceed 24 hours, sample must be kept refrigerated. [Note: Recent studies (13,16) have indicated that PUF does not retain, during storage, B[a]P as effectively as XAD-2. Therefore, sample holding time should not exceed 20 days.]

11.3.20 A final calculated sample flow check is performed using the calibration orifice, as described in Section 11.2.2. If calibration deviates by more than 10% from the initial reading, the flow data for that sample must be marked as suspect and the sampler should be inspected and/or removed from service.

11.3.21 At least one field filter/adsorbent blank will be returned to the laboratory with each group of samples. A field blank is treated exactly as a sample except that no air is drawn through the filter/adsorbent cartridge assembly.

11.3.22 Samples are stored at 0°C in an ice chest until receipt at the analytical laboratory, after which they are refrigerated at 4°C.

12. Sample Clean-up and Concentration

[Note: The following sample extraction, concentration, solvent exchange and analysis procedures are outlined for user convenience in Figure 11.]

12.1 Sample Identification

12.1.1 The samples are returned in the ice chest to the laboratory in the glass sample container containing the filter and adsorbent.

12.1.2 The samples are logged in the laboratory logbook according to sample location, filter and adsorbent cartridge number identification and total air volume sampled (uncorrected).

12.1.3 If the time span between sample registration and analysis is greater than 24-hrs., then the samples must be kept refrigerated. Minimize exposure of samples to fluorescence light. All samples should be extracted within one week after sampling.

12.2 Soxhlet Extraction and Concentration

12.2.1 Assemble the Soxhlet apparatus [see Figure 3(a)]. Immediately before use, charge the Soxhlet apparatus with 200 to 250 mL of methylene chloride and reflux for 2 hours. Let the apparatus cool, disassemble it, transfer the methylene chloride to a clean glass container, and retain it as a blank for later analysis, if required. Place the adsorbent and filter together in the Soxhlet apparatus (the use of an extraction thimble is optional) if using XAD-2 adsorbent in the sampling module. [Note: The filter and adsorbent are analyzed together in order to reach detection limits, avoid questionable interpretation of the data, and minimize cost.] Since methylene chloride is not a suitable solvent for PUF, 10% ether in hexane is employed to extract the PAHs from the PUF resin bed separate from the methylene chloride extraction of the accompanying filter rather than methylene chloride for the extraction of the XAD-2 cartridge.

12.2.1.1 Prior to extraction, add a surrogate standard to the Soxhlet solvent. A surrogate standard (i.e., a chemically inert compound not expected to

occur in an environmental sample) should be added to each sample, blank, and matrix spike sample just prior to extraction or processing. The recovery of the surrogate standard is used to monitor for unusual matrix effects, gross sample processing errors, etc. Surrogate recovery is evaluated for acceptance by determining whether the measured concentration falls within the acceptance limits. The following surrogate standards have been successfully utilized in determining matrix effects, sample process errors, etc. utilizing GC/FID, GC/MS or HPLC analysis.

Surrogate Standard	Concentration	Analytical Technique
Dibromobiphenyl	50 ng/uL	GC/FID
Dibromobiphenyl	50 ng/uL	GC/MS
Deuterated Standards	50 ng/uL	GC/MS
Decafluorobiphenyl	50 ng/uL	HPLC

[Note: The deuterated standards will be added in Section 14.3.2. Deuterated analogs of selective PAHs cannot be used as surrogates for HPLC analysis due to coelution problems.] Add the surrogate standard to the Soxhlet solvent.

12.2.1.2 For the XAD-2 and filter extracted together, add 300 mL of methylene chlorine to the apparatus and reflux for 18 hours at a rate of at least 3 cycles per hour.

12.2.1.3 For the PUF extraction separate from the filter, add 300 mL of 10 percent ether in hexane to the apparatus and reflux for 18 hours at a rate of at least 3 cycles per hour.

12.2.1.4 For the filter extraction, add 300 mL of methylene chloride to the apparatus and reflux for 18 hours at a rate of at least 3 cycles per hour.

12.2.2 Dry the extract from the Soxhlet extraction by passing it through a drying column containing about 10 grams of anhydrous sodium sulfate. Collect the dried extract in a Kuderna-Danish (K-D) concentrator assembly. Wash the

extractor flask and sodium sulfate column with 100 - 125 mL of methylene chloride to complete the quantitative transfer.

12.2.3 Assemble a Kuderna-Danish concentrator [see Figure 3(b)] by attaching a 10 mL concentrator tube to a 500 mL evaporative flask. [Note: Other concentration devices (vortex evaporator) or techniques may be used in place of the K-D as long as qualitative and quantitative recovery can be demonstrated.]

12.2.4 Add two boiling chips, attach a three-ball macro-Snyder column to the K-D flask, and concentrate the extract using a water bath at 60 to 65°C. Place the K-D apparatus in the water bath so that the concentrator tube is about half immersed in the water and the entire rounded surface of the flask is bathed with water vapor. Adjust the vertical position of the apparatus and the water temperature as required to complete the concentration in one hour. At the proper rate of distillation, the balls of the column actively chatter but the chambers do not flood. When the liquid has reached an approximate volume of 5 mL, remove the K-D apparatus from the water bath and allow the solvent to drain for at least 5 minutes while cooling.

12.2.5 Remove the Snyder column and rinse the flask and its lower joint into the concentrator tube with 5 mL of cyclohexane.

12.3 Solvent Exchange

12.3.1 Replace the K-D apparatus equipped with a Snyder column back on the water bath.

12.3.2 Increase the temperature of the hot water bath to 95-100°C. Momentarily, remove the Snyder column, add a new boiling chip, and attach a two-ball micro-Snyder column. Prewet the Snyder column, using 1 mL of cyclohexane. Place the K-D apparatus on the water bath so that the concentrator tube is partially immersed in the hot water. Adjust the vertical position of the apparatus and the water temperature, as required, to complete concentration in 15-20 minutes. At the proper rate of distillation, the balls of the column will actively chatter, but the chambers

will not flood. When the apparent volume of liquid reaches 0.5 mL, remove the K-D apparatus and allow it to drain and cool for at least 10 minutes.

12.3.3 When the apparatus is cool, remove the micro-Snyder column and rinse its lower joint into the concentrator tube with about 0.2 mL of cyclohexane. [Note: A 5 mL syringe is recommended for this operation]. Adjust the extract volume to exactly 1.0 mL with cyclohexane. Stopper the concentrator tube and store refrigerated at 4°C, if further processing will not be performed immediately. If the extract will be stored longer than 24 hours, it should be transferred to a Teflon®-sealed screw-cap vial.

12.4 Sample Cleanup By Solid Phase Exchange

Cleanup procedures may not be needed for relatively clean matrix samples. If the extract in Section 12.3.3 is clear, cleanup may not be necessary. If cleanup is not necessary, the cyclohexane extract (1 mL) can be analyzed directly by GC/FI detection, except the initial oven temperature begins at 30°C rather than 80°C for cleanup samples (see Section 13.3), or solvent exchange to acetonitrile for HPLC analysis. If cleanup is required, the procedures are presented using either handpack silica gel column as prescribed in Method 610 (see Section 18.0, citation No. 18 and 22) or the use of a Lobar prepacked silica gel column for PAH concentration and separation. Either approach can be employed by the user.

12.4.1 Method 610 Cleanup Procedure [see Figure 3(c)]

12.4.1.1 Pack a 6-inch disposable Pasture pipette (10 mm I.D. x 7 cm length) with a piece of glass wool. Push the wool to the neck of the disposable pipette. Add 10 grams of activated silica gel in methylene chloride slurry to the disposable pipette. Gently tap the column to settle the silica gel and elute the methylene chloride. Add 1 gram of anhydrous sodium sulfate to the top of the silica gel column.

12.4.1.2 Prior to initial use, rinse the column with methylene chloride at 1 mL/min for 1 hr to

remove any trace of contaminants. Preelute the column with 40 mL of pentane. Discard the eluate and just prior to exposure of the sodium sulfate layer to the air, transfer the 1 mL of the cyclohexane sample extract onto the column, using an additional 2 mL of cyclohexane to complete the transfer. Allow to elute through the column.

12.4.1.3 Just prior to exposure of the sodium sulfate layer to the air, add 25 mL of pentane and continue elution of the column. Discard the pentane eluate. [Note: The pentane fraction contains the aliphatic hydrocarbons collected on the filter/ adsorbent combination. If interested, this fraction may be analyzed for specific aliphatic organics.] Elute the column with 25 mL of methylene chloride/pentane (4 + 6) (V/V) and collect the eluate in a 500 mL K-D flask equipped with a 10 mL concentrator tube. [Note: This fraction contains the B[a]P and other moderately polar PAHs]. Elution of the column should be at a rate of about 2 mL/min. Concentrate the collected fraction to less than 10 mL by the K-D technique, as illustrated in Section 12.3 using pentane to rinse the walls of the glassware. The extract is now ready for HPLC or GC analysis. [Note: An additional elution through the column with 25 mL of methanol will collect highly polar oxygenated PAHs with more than one functional group. This fraction may be analyzed for specific polar PAHs. However, additional cleanup by solid phase extraction may be required to obtain both qualitative and quantitative data due to complexity of the eluant.]

12.4.2 Lobar Prepacked Column Procedure

12.4.2.1 The setup using the Lobar prepacked column consists of an injection port, septum, pump, precolumn containing sodium sulfate, Lobar prepacked column and solvent reservoir.

12.4.2.2 The column is cleaned and activated according to the following cleanup sequence:

Fraction	Solvent Composition	Volume (mL)
1	100% Hexane	20
2	80% Hexane/20% Methylene Chloride	10
3	50% Hexane/50% Methylene Chloride	10
4	100% Methylene Chloride	10
5	95% Methylene Chloride/5% Methanol	10
6	80% Methylene Chloride/20% Methanol	10

12.4.2.3 Reverse the sequence at the end of the run and run to the 100% hexane fraction in order to activate the column. Discard all fractions.

12.4.2.4 Pre-elute the column with 40 mL of hexane, which is also discharged.

12.4.2.5 Inject 1 mL of the cyclohexane sample extract, followed by 1 mL injection of blank cyclohexane.

12.4.2.6 Continue elution of the column with 20 mL of hexane, which is also discharged.

12.4.2.7 Now elute the column with 180 mL of a 40/60 mixture of methylene chloride/hexane respectively.

12.4.2.8 Collect approximately 180 mL of the 40/60 methylene chloride/hexane mixture in a K-D concentrator assembly.

12.4.2.9 Concentrate to less than 10 mL with the K-D assembly as discussed in Section 12.2.

12.4.2.10 The extract is now ready for either HPLC or GC analysis.

13. Gas Chromatography Analysis with Flame Ionization Detection

13.1 Gas chromatography (GC) is a quantitative analytical technique useful for PAH identification. This method provides the user the flexibility of column selection (packed or capillary) and detector [flame ionization (FI) or mass spectrometer (MS)] selection. The mass spectrometer provides for specific identification of B(a)P; however, with system optimization, other PAHs may be qualitatively and quantitatively detected using MS (see Section 14.0). This procedure provides for common GC separation of the PAHs with

subsequent detection by either FI or MS (see Figure 12.0). The following PAHs have been quantified by GC separation with either FI or MS detection:

Acenaphthene
Acenaphthylene
Anthracene
Benzo(a)anthracene
Benzo(a)pyrene
Benzo(b)fluoranthene
Benzo(e)pyrene
Benzo(g,h,i)perylene
Benzo(k)fluoranthene
Chrysene
Dibenzo(a,h)anthracene
Fluoranthene
Fluorene
Indeno(1,2,3-cd)pyrene
Naphthalene
Phenanthrene
Pyrene

The packed column gas chromatographic method described here can not adequately resolve the following four pairs of compounds: anthracene and phenanthrene; chrysene and benzo(a)anthracene; benzo(b)fluoranthene and benzo(k)fluoranthene; and dibenzo(a,h) anthracene and indeno(1,2,3-cd)pyrene. The use of a capillary column instead of the packed column, also described in this method, should adequately resolve these PAHs. However, unless the purpose of the analysis can be served by reporting a quantitative sum for an unresolved PAH pair, either capillary gas chromatography/mass spectroscopy (Section 14.0) or high performance liquid chromatography (Section 15.0) should be used for these compounds. This section will address the use of GC/FI detection using packed or capillary columns.

13.2 To achieve maximum sensitivity with the GC/FI method, the extract must be concentrated to 1.0 mL, if not already concentrated to 1 mL. If not already concentrated to 1 mL, add a clean boiling chip to the methylene chloride extract in the concentrator tube. Attach a two-ball micro-Snyder column. Prewet the micro-Snyder column by adding about 2.0 mL of methylene chloride to the top. Place the micro K-D apparatus on a hot water bath (60 to 65°C) so that the concentrator tube is partially immersed in the hot water. Adjust the vertical position of the apparatus and the water temperature as required to complete the concentration in 5 to 10 minutes. At the proper rate of distillation the balls will actively chatter but the chambers will not flood. When the apparent volume of liquid reaches 0.5 mL, remove the K-D apparatus. Drain and cool for at least 10 minutes. Remove the micro-Snyder column and rinse its lower joint into the concentrator tube with a small volume of methylene chloride. Adjust the final volume to 1.0 mL and stopper the concentrator tube.

13.3 Assemble and establish the following operating parameters for the GC equipped with an FI detector:

	Capillary (A)	Capillary (B)	Packed
Identification	SPB-5 fused silica capillary, 0.25 um 5% phenyl, methyl siloxane bonded	SPB-5 fused silica capillary, 0.25 um 5% phenyl, methyl siloxane bonded	Chromosorb W-AW-DMCS (100/120 mesh) coated with 3% OV-17
Dimensions	30-m x 0.25-mm ID	30-m x 0.25-mm ID	1.8-m x 2-mm ID
Carrier Gas	Helium	Helium	Nitrogen
Carrier Gas Flow Rate	28-30 cm/sec (1 cm/minute)	28-30 cm/sec (1 cm/minute)	30-40 cm/minute
Column Program	35°C for 2 min; program at 8°C/min to 280°C and hold for 12 minutes	80°C for 2 min; program at 8°C/min to 280°C and hold for 12 minutes	Hold at 100°C for 4 minutes; program at 8°C/min to 280°C and hold for 15 minutes
Detector	Flame Ionization	Flame Ionization	Flame Ionization

(A) Without column cleanup (see Section 12.4)
(B) With column cleanup (see Section 12.4.1)

13.4 Prepare and calibrate the chromatographic system using either the external standard technique (Section 13.4.1) or the internal standard technique (Section 13.4.2). Figure 13.0 outlines the following sequence involving GC calibration and retention time window determination.

13.4.1 External Standard Calibration Procedure - For each analyte of interest, including surrogate compounds for spiking, if used, prepare calibration standards at a minimum of five concentration levels by adding volumes of one or more stock standards to a volumetric flask and diluting to volume with methylene chloride. [Note: All calibration standards of interest involving selected PAHs, of the same concentration, can be prepared in the same flask.]

13.4.1.1 Prepare stock standard solutions at a concentration of 100 ug/uL by dissolving 0.100 gram of assayed PAH material in methylene chloride and diluting to vol- in a 10 mL volumetric flask. [Note: Larger volumes can be used at the convenience of the analyst.]

13.4.1.2 When compound purity is assayed to be 98% or greater, the weight can be used without correction to calculate the concentration of the stock standard. [Note: Commercially prepared stock standards can be used at any concentration if they are certified by the manufacturer or by an independent source.] Transfer the stock standard solutions into Teflon®-sealed screw-cap bottles.

13.4.1.3 Store at 4°C and protect from light. Stock standards should be checked frequently for signs of degradation or evaporation, especially just prior to preparing calibration standards from them. Stock standard solutions must be replaced after one year, or sooner, if comparison with check standards indicates a problem.

13.4.1.4 Calibration standards at a minimum of five concentration levels should be prepared through dilution of the stock standards with methylene chloride. One of the concentration levels should be at a concentration near, but above, the method detection limit. The remaining concentration levels should correspond to the expected range of concentrations found in real samples or should define the working range of the GC. [Note: Calibration solutions must be replaced after six months, or sooner, if comparison with a check standard indicates a problem.]

13.4.1.5 Inject each calibration standard using the technique that will be used to introduce the actual samples into the gas chromatograph (e.g., 1- to 3-uL injections). [Note: The same amount must be injected each time.]

13.4.1.6 Tabulate peak height or area responses against the mass injected. The results can be used to prepare a calibration curve for each analyte. [Note: Alternatively, for samples that are introduced into the gas chromatograph using a syringe, the ratio of the response to the amount

injected, defined as the calibration factor (CF), can be calculated for each analyte at each standard concentration by the following equation:

$$\text{Calibration factor (CF)} = \frac{\text{Total Area of Peak}}{\text{Mass injected (in nanograms)}}$$

If the percent relative standard deviation (%RSD) of the calibration factor is less than 20% over the working range, linearity through the origin can be assumed, and the average calibration factor can be used in place of a calibration curve.]

13.4.1.7 The working calibration curve or calibration factor must be verified on each working day by the injection of one or more calibration standards. If the response for any analyte varies from the predicted response by more than ±20%, a new calibration curve must be prepared for that analyte. Calculate the percent variance by the following equation:

$$\text{Percent variance} = \frac{R_2 - R_1}{R_1} \times 100$$

where

R_2 = Calibration factor from succeeding analysis.

R_1 = Calibration factor from first analysis.

13.4.2 Internal Standard Calilbration Procedure - To use this approach, the analyst must select one or more internal standards that are similar in analytical behavior to the compounds of interest. The analyst must further demonstrate that the measurement of the internal standard is not affected by method or matrix interferences. Due to these limitations, no internal standard applicable to all samples can be suggested. [Note: It is recommended that the internal standard approach be used only when the GC/MS procedure is employed due to coeluting species.]

13.4.2.1 Prepare calibration standards at a minimum of five concentration levels for each analyte of interest by adding volumes of one or more stock standards to a volumetric flask.

13.4.2.2 To each calibration standard, add a known constant amount of one or more internal standard and dilute to volume with methylene chloride. [Note: One of the standards should be at a concentration near, but above, the method detection limit. The other concentrations should correspond to the expected range of concentrations found in real samples or should define the working range of the detector.]

13.4.2.3 Inject each calibration standard using the same introduction technique that will be applied to the actual samples (e.g., 1- to 3-uL injection).

13.4.2.4 Tabulate the peak height or area responses against the concentration of each compound and internal standard.

13.4.2.5 Calculate response factors (RF) for each compound as follows:

$$\text{Response Factor (RF)} = (A_s C_{is})/(A_{is} C_s)$$

where:

A_s = Response for the analyte to be measured (area units or peak height).

A_{is} = Response for the internal standard. (area units or peak height).

C_{is} = Concentration of the internal standard, (ug/L).

C_s = Concentration of the analyte to be measured, (ug/L).

13.4.2.6 If the RF value over the working range is constant (<20% RSD), the RF can be assumed to be invariant, and the average RF can be used for calculations. [Note: Alternatively, the results can be used to plot a calibration curve of response ratios, A_s/A_{is} versus RF.]

13.4.2.7 The working calibration curve or RF must be verified on each working day by the measurement of one or more calibration standards.

13.4.2.8 If the response for any analyte varies from the predicted response by more than ±20%, a new calibration curve must be prepared for that compound.

13.5 Retention Time Windows Determination

13.5.1 Before analysis can be performed, the retention time windows must be established for each analyte.

13.5.2 Make sure the GC system is within optimum operating conditions.

13.5.3 Make three injections of the standard containing all compounds for retention time window determination. [Note: The retention time window must be established for each analyte throughout the course of a 72-hr period.]

13.5.4 The retention window is defined as plus or minus three times the standard deviation of the absolute retention times for each standard.

13.5.5 Calculate the standard deviation of the three absolute retention times for each single component standard. In those cases where the standard deviation for a particular standard is zero, the laboratory must substitute the standard deviation of a close eluting, similar compound to develop a valid retention time window.

13.5.6 The laboratory must calculate retention time windows for each standard on each GC column and whenever a new GC column is installed. The data must be noted and retained in a notebook by the laboratory as part of the user SOP and as a quality assurance check of the analytical system.

13.6 Sample Analysis

13.6.1 Inject 1- to 3-uL of the methylene chloride extract from Section 13.2 (however, the same amount each time) using the splitless injection technique when using capillary column. [Note: Smaller (1.0 uL) volumes can be injected if automatic devices are employed.]

13.6.2 Record the volume injected and the resulting peak size in area units or peak height.

13.6.3 Using either the internal or external calibration procedure, determine the identity and quantity of each component peak in the sample chromatogram through retention time window and established calibration curve. Table 2 outlines typical retention times for selected PAHs, using both the packed and capillary column technique coupled with FI detection, while Figure 14.0 illustrates typical chromatogram for a packed column analysis.

13.6.3.1 If the responses exceed the linear range of the system, dilute the extract and reanalyze. It is recommended that extracts be diluted so that all peaks are on scale. Overlapping peaks are not always evident when peaks are off scale. Computer reproduction of chromatograms, manipulated to ensure all peaks are on scale over a 100-fold range, are acceptable if linearity is demonstrated. Peak height measurements are recommended over peak area integration when overlapping peaks cause errors in area integration.

13.6.3.2 Establish <u>daily</u> retention time windows for each analyte. Use the absolute retention time for each analyte from Section 13.5.4 as the midpoint of the window for that day. The daily retention time window equals the midpoint $\pm$ three times the standard deviation determined in Section 13.5.4.

13.6.3.3 Tentative identification of an analyte occurs when a peak from a sample extract falls within the daily retention time window. [Note: Confirmation may be required on a second GC column, or by GC/MS (if concentration permits) or by other recognized confirmation techniques if overlap of peaks occur.]

13.6.3.4 Validation of GC system qualitative performance is performed through the use of the midlevel standards. If the mid-level standard falls outside its daily retention time window, the system

is out of control. Determine the cause of the problem and perform a new calibration sequence (see Section 13.4).

13.6.3.5 Additional validation of the GC system performance is determined by the surrogate standard recovery. If the recovery of the surrogate standard deviates from 100% by not more than 20%, then the sample extraction, concentration, clean-up and analysis is certified. If it exceeds this value, then determine the cause of the problem and correct.

13.6.4 Determine the concentration of each analyte in the sample according to Sections 17.1 and 17.2.1.

14. Gas Chromatography with Mass Spectroscopy Detection

14.1 The analysis of the extracted sample for benzo[a]pyrene and other PAHs is accomplished by an electron impact gas chromatography/mass spectrometry (EI GC/MS) in the selected ion monitoring (SIM) mode with a total cycle time (including voltage reset time) of one second or less. The GC is equipped with an ultra No. 2 fused silica capillary column (50-m x 0.25-mm I.D.) with helium carrier gas for analyte separation. The GC column is temperature controlled and interfaced directly to the MS ion source.

14.2 The laboratory must document that the EI GC/MS system is properly maintained through periodic calibration checks. The GC/MS system should have the following specifications:

Mass range: 35-500 amu
Scan time: 1 sec/scan
GC Column: 50 m x 0.25 mm I.D. (0.25 um film thickness)
Ultra No. 2 fused silica capillary column or equivalent
Initial column temperature and hold time: 40°C for 4 min
Column temperature program: 40-270°C at 10°C/min
Final column temperature hold: 270°C (until benzo[g,h,i] perylene has eluted)
Injector temperature: 250-300°C
Transfer line temperature: 250-300°C
Source temperature: According to manufacturer's specifications
Injector: Grob-type, splitless
EI Condition: 70 eV
Mass Scan: Follow manufacturer instruction for select ion monitoring (SIM) mode.
Sample volume: 1-3 uL
Carrier gas: Helium at 30 cm/sec.

The GC/MS is tuned using a 50 ng/uL solution of decafluorotriphenylphosphine (DFTPP). The DFTPP permits the user to tune the mass spectrometer on a daily basis. If properly tuned, the DFTPP key ions and ion abundance criteria should be met as outlined in Table 3.

14.3 The GC/MS operating conditions are outlined in Table 4. The GC/MS system can be calibrated using the external standard technique (Section 14.3.1) or the internal standard technique (Section 14.3.2). Figure 15.0 outlines the following sequence involving the GC/MS calibration.

14.3.1 External standard calibration procedure.

14.3.1.1 Prepare calibration standard of B[a]P or other PAHs at a minimum of five concentration levels by adding volumes of one or more stock standards to a volumetric flask and diluting to volume with methylene chloride. The stock standard solution of B[a]P (1.0 ug/uL) must be prepared from pure standard materials or purchased as certified solutions.

14.3.1.2 Place 0.0100 grams of native B[a]P or other PAHs on a tared aluminum weighing disk and weigh on a Mettler balance.

14.3.1.3 Quantitatively, transfer to a 10 ml volumetric flask. Rinse the weighing disk with several small portions of methylene chloride. Ensure all material has been transferred.

14.3.1.4 Dilute to mark with methylene chloride.

14.3.1.5 The concentration of the stock standard solution of B[a]P or other PAHs in the flask is 1.0 ug/uL [Note: Commerically prepared stock standards may be used at any concentration if they are certified by the manufacturer or by an independent source.]

14.3.1.6 Transfer the stock standard solutions into Teflon®-sealed screw-cap bottles. Store at 4°C and protect from light. Stock standard solutions should be checked frequently for signs of degradation or evaporation, especially just prior to preparing calibration standards from them.

14.3.1.7 Stock standard solutions must be replaced after 1 yr or sooner if comparison with quality control check samples indicates a problem.

14.3.1.8 Calibration standards at a minimum of five concentration levels should be prepared. [Note: One of the calibration standards should be at a concentration near, but above the method detection limit; the others should correspond to the range of concenrations found in the sample but should not exceed the working range of the GC/MS system.] Accurately pipette 1.0 ml of the stock solution (1 ug/uL) into another 10 mL volumetric flask, dilute to mark with methylene chloride. This daughter solution contains 0.1 ug/uL of B[a]P or other PAHs.

14.3.1.9 Prepare a set of standard solutions by appropriately diluting, with methylene chloride, accurately measured volumes of the daughter solution (0.1 ug/uL).

14.3.1.10 Accurately pipette 100 uL, 300 uL, 500 uL, 700 uL and 1000 uL of the daughter solution (0.1 ug/uL) into each 10 mL volumetric flask, respectively. To each of these flasks, add an internal deuterated standard to give a final concentration of 40 ng/uL of the internal deuterated standard (Section 14.3.2.1). Dilute to mark with methylene chloride.

14.3.1.11 The concentration of B[a]P in each flask is 1 ng/uL, 3 ng/uL, 5 ng/uL, 7 ng/uL, and 10 ug/uL respectively. All standards should be stored at 4°C and protected from fluorescent light and should be freshly prepared once a week or sooner if check standards indicates a problem.

14.3.1.12 Analyze a constant volume (1-3 uL) of each calibration standard and tabulate the area responses of the primary characteristic ion of each standard against the mass injected. The results may be used to prepare a calibration curve for each compound. Alternatively, if the ratio of response

to amount injected (calibration factor) is a constant over the working range (<20% relative standard deviation, RSD), linearity through the origin may be assumed and the average ratio or calibration factor may be used in place of a calibration curve.

14.3.1.13 The working calibration curve or calibration factor must be verified on each working day by the measurement of one or more calibration standards. If the response for any parameter varies from the predicted response by more than ± 20%, the rest must be repeated using a fresh calibration standard. Alternatively, a new calibration curve or calibration factor must be prepared for that compound.

14.3.2 Internal standard calibration procedure.

14.3.2.1 To use this approach, the analyst must select one or more internal standards that are similar in analytical behavior to the compounds of interest. For analysis of B[a]P, the analyst should use perylene -d_{12}. The analyst must further demonstrate that the measurement of the internal standard is not affected by method or matrix interferences. The following internal standards are suggested at a concentration of 40 ng/uL for specific PAHs:

Perylene - d_{12}	Acenaphthene - d_{10}
Benzo(a)pyrene	Acenaphthene
Benzo(k)fluoranthene	Acenaphthylene
Benzo(g,h,i)perylene	Fluorene
Dibenzo(a,h)anthracene	
Indeno(1,2,3-cd)pyrene	Naphthalene - d_8
Chrysene - d_{12}	Naphthalene
Benzo(a)anthracene	Phenanthrene -d_{10}
Chrysene	
Pyrene	Anthracene
	Fluoranthene
	Phenanthrene

14.3.2.2 A mixture of the above deuterated compounds in the appropriate concentration range are commercially available (see Section 9.3.1.5).

14.3.2.3 Use the base peak ion as the primary ion for quantification of the standards. If interferences are noted, use the next two most intense ions as the secondary ions. The internal standard is added to all calibration standards and all sample extracts analyzed by GC/MS. Retention time standards, column performance standards, and a mass spectrometer tuning standard may be included in the internal standard solution used.

14.3.2.4 Prepare calibration standards at a minimum of three concentration level for each parameter of interest by adding appropriate volumes of one or more stock standards to a volumetric flask. To each calibration standard or standard mixture, add a known constant amount of one or more of the internal deuterated standards to yield a resulting concentration of 40 ng/uL of internal standard and dilute to volume with methylene chloride. One of the calibration standards should be at a concentration near, but above, the minimum detection limit (MDL) and the other concentrations should correspond to the expected range of concentrations found in real samples or should define the working range of the GC/MS system.

14.3.2.5 Analyze constant amount (1-3 uL) of each calibration standard and tabulate the area of the primary characteristic ion against concentration for each compound and internal standard, and calculate the response factor (RF) for each analyte using the following equation:

$$RF = (A_s C_{is})/(A_{is} C_s)$$

Where:

A_s = Area of the characteristic ion for the analyte to be measured.

A_{is} = Area of the characteristic ion for the internal standard.

C_{is} = Concentration of the internal standard, (ng/uL).

C_s = Concentration of the analyte to be measured, (ng/uL).

If the RF value over the working range is a constant (<20% RSD), the RF can be assumed to be invariant and the average RF can be used for calculations. Alternatively, the results can be used to plot a calibration curve of response ratios, A_s/A_{is}, vs. RF. Table 5.0 outlines key ions for selected internal deuterated standards.

14.3.2.6 The working calibration curve or RF must be verified on each working day by the measurement of one or more calibration standards. If the response for any parameter varies from the predicted response by more than ± 20%, the test must be repeated using a fresh calibration standard. Alternatively, a new calibration curve must be prepared.

14.3.2.7 The relative retention times for each compound in each calibration run should agree within 0.06 relative retention time units.

14.4 Sample Analysis

14.4.1 It is highly recommended that the extract be screened on a GC/FID or GC/PID using the same type of capillary column as in the GC/MS procedure. This will minimize contamination of the GC/MS system from unexpectedly high concentrations of organic compounds.

14.4.2 Analyze the 1 mL extract (see Section 13.2) by GC/MS. The recommended GC/MS operating conditions to be used are specified in Section 14.2.

14.4.3 If the response for any quantitation ion exceeds the initial calibration curve range of the GC/MS system, extract dilution must take place. Additional internal standard must be added to the diluted extract to maintain the required 40 ng/uL of each internal standard in the extracted volume. The diluted extract must be reanalyzed.

14.4.4 Perform all qualitative and quantitative measurements as described in Section 14.3. The typical characteristic ions for selective PAHs are outlined in Table 6.0. Store the extracts at 4°C, protected from light in screw-cap vials equipped with unpierced Teflon®-lined, for future analysis.

14.4.5 For sample analysis, the comparison between the sample and references spectrum must illustrate:

(1) Relative intensities of major ions in the reference spectrum (ions >10% of the most abundant ion) should be present in the sample spectrum.

(2) The relative intensities of the major ions should agree within ±20%. (Example: For an ion with an abundance of 50% in the standard spectrum, the corresponding sample ion abundance must be between 30 and 70%).

(3) Molecular ions present in the reference spectrum should be present in the sample spectrum.

(4) Ions present in the sample spectrum but not in the reference spectrum should be reviewed for possible background contaminatiuon or presence of coeluting compounds.

(5) Ions present in the reference spectrum but not in the sample spectrum should be reviewed for possible subtraction from the sample spectrum because of background contamination or coeluting peaks. Data system library reduction programs can sometimes create these discrepancies.

14.4.6 Determine the concentration of each analyte in the sample according to Sections 17.1 and 17.2.2.

14.5 GC/MS Performance Tests

14.5.1 Daily DFTPP Tuning - At the beginning of each day that analyses are to be performed, the GC/MS system must be checked to see that acceptable performance criteria are achieved when challenged with a 1 uL injection volume containing 50 ng of decafluorotriphenylphosphine (DFTPP). The DFTPP key ions and ion abundance criteria that must be met are illustrated in Table 3.0. Analysis should not begin until all those criteria are met. Background subtraction should be staightforward and designed only to eliminate column bleed or instrument background ions. The GC/MS tuning standard should also be used to assess GC column performance and injection port inertness. Obtain a background correction mass spectra of DFTPP and check that all key ions criteria are met. If the criteria are not achieved, the analyst must retune the mass spectrometer and repeat the test until all criteria are achieved. The

performance criteria must be achieved before any samples, blanks on standards are analyzed. If any key ion abundance observed for the daily DFTPP mass tuning check differs by more than 10% absolute abundance from that observed during the previous daily tuning, the instrument must be retuned or the sample and/or calibration solution reanalyzed until the above condition is met.

14.5.2 Daily 1-point Initial Calibration Check - At the beginning of each work day, a daily 1-point calibration check is performed by re-evaluating the midscale calibration standard. This is the same check that is applied during the initial calibration, but one instead of five working standards are evaluated. Analyze the one working standards under the same conditions the initial calibration curve was evaluated. Analyze 1 uL of each of the mid-scale calibration standard and tabulate the area response of the primary characteristic ion against mass injected. Calculate the percent difference using the following equation:

$$\% \text{ Difference} = \frac{RF_C - \overline{RF}_I}{\overline{RF}_I} \times 100$$

Where:

$\overline{RF}_I$ = average response factor from initial calibration using mid-scale standard.

RF_C = response factor from current verification check using mid-scale standard.

If the percent difference for the mid-scale level is greater than 10%, the laboratory should consider this a warning limit. If the percent difference for the mid-scale standard is less than 20%, the initial calibration is assumed to be valid. If the criterion is not met (<20% difference), then corrective action MUST be taken. [Note: Some possible problems are standard mixture degradation, injection port inlet contamination, contamination at the front end of the analytical column, and active sites in the column or chromatographic system.] This check must be met

before analysis begins. If no source of the problem can be determined after corrective action has been taken, a new five-point calibration MUST be generated. This criterion MUST be met before sample analysis begins.

14.5.3 12-hour Calibration Verification - A calibration standard at mid-level concentration containing B[a]P or other PAHs must be performed every twelve continuous hours of analysis. Compare the standard every 12-hours with the average response factor from the initial calibration. If the % difference for the response factor (see Section 14.5.2) is less than 20%, then the GC/MS system is operative within initial calibration values. If the criteria is not met (>20% difference), then the source of the problem must be determined and a new five-point curve MUST be generated.

14.5.4 Surrogate Recovery - Additional validation of the GC system performance is determined by the surrogate standard recovery. If the recovery of the surrogate standard deviates from 100% by not more than 20%, then the sample extraction, concentration, clean-up and analysis is certified. If it exceeds this value, then determine the cause of the problem and correct.

15. High Performance Liquid Chromatography (HPLC) Detection

15.1 Introduction

15.1.1 Detection of B[a]P by HPLC has also been a viable tool in recent years. The procedure outlined below has been written specifically for analysis of B[a]P by HPLC. However, by optimizing chromatographic conditions [(multiple detector fluorescence - excitation at 240 nm, emission at 425 nm; ultraviolet at 254 nm)] and varying the mobile phase composition through a gradient program, the following PAHs may also be quantitatified:

COMPOUND	DETECTOR[1]	COMPOUND	DETECTOR[1]
Acenaphthene	UV	Benzo(k)fluoranthene	FL
Acenaphthylene	UV	Dibenzo(a,h)anthracene	FL
Anthracene	UV	Fluoranthene	FL
Benzo(a)anthracene	FL	Fluorene	UV
Benzo(a)pyrene	FL	Indeno(1,2,3-cd)pyrene	FL
Benzo(b)fluoranthene	FL	Naphthalene	UV
Benzo[e]pyrene	FL	Phenanthrene	UV
Benzo(ghi)perylene	FL	Pyrene	FL

[1]UV= Ultraviolet
FL= Fluorescences

15.1.2 This method provides quantitative identification of the selected PAH's compounds listed above by high performance liquid chromatography. It is based on separating of compounds of a liquid mixture through a liquid chromatographic column and measuring the separated components with suitable detectors.

15.1.3 The method involves solvent exchange, with subsequent HPLC detection involving ultraviolet (UV) and fluoresence (FL) detection.

15.2 Solvent Exchange To Acetonitrile

15.2.1 To the extract in the concentrator tube, add 4 mL of acetonitrile and a new boiling chip; attach a micro-snyder column to the apparatus.

15.2.2 Increase temperature of the hot water bath to 95 to 100°C.

15.2.3 Concentrate the solvent as in Section 12.3.

15.2.4 After cooling, remove the micro-Snyder column and rinse its lower sections into the concentration tube with approximately 0.2 mL acetonitrile.

15.2.5 Adjust its volume to 1.0 mL.

15.3 HPLC Assembly

15.3.1 The HPLC system is assembled, as illustrated in Figure 10.

15.3.2 The HPLC system is operated according to the following parameters:

HPLC Operating Parameters

Guard Column: VYDAC 201 GCCIOYT

Analytical Column: VYDAC 201 TP5415 C-18 RP (0.46 x 25 cm)

Column Temperature: 27.0 ± 2°C

Mobile Phase:

Solvent Composition	Time (Minutes)
40% Acetonitrile/60% water	0
100% Acetonitrile	25
100% Acetonitrile	35
40% Acetonitrile/60% water	45

Linear gradient elution at 1.0 mL/min

Detector: Variable wavelength ultraviolet and fluorescence.

Flow Rate: 1.0 mL/minute

[Note: To prevent irreversible absorption due to "dirty" injections and premature loss of column efficiency, a guard column is installed between the injector and the analytical column. The guard column is generally packed with identical material as is found in the analytical column. The guard column is generally replaced with a fresh guard column after several injections (50) or when separation between compounds becomes difficult. The analytical column specified in this procedure has been laboratory evaluated. Other analytical columns may be used as long as they meet procedure and separation requirements. Table 7.0 outlines other columns uses to determine PAHs by HPLC.]

15.3.3 The mobile phases are placed in separate HPLC solvent reservoirs and the pumps are set to yield a total of 1.0 mL/minute and allowed to pump for 20-30 minutes before the first analysis. The detectors are switched on at least 30 minutes before the first analysis. UV detection at 254 nm is generally preferred. The fluorescence spectrometer excitation wavelengths range from 250 to 800 nanometers. The excitation and emission slits are both set at 10 nanometers nominal bandpass.

15.3.4 Before each analysis, the detector baseline is checked to ensure stable operation.

15.4 HPLC Calibration

15.4.1 Prepare stock standard solutions at PAH concentrations of 1.00 ug/uL by dissolving 0.0100 grams of assayed material in acetonitrile and diluting to volume in a 10 mL volumetric flask. [Note: Larger volumes can be used at the convenience of the analyst. When compound purity is assayed to be 98% or greater, the weight can be used without correction to calculate the concentration of the stock standard.] Commercially prepared stock standards can be used at any concentration if they are certified by the manufacturer or by an independent source.

15.4.2 Transfer the stock standard solutions into Teflon®-sealed screw-cap bottles. Store at 4°C and protect from light. Stock standards should be checked frequently for signs of degradation or evaporation, especially just prior to preparing calibration standards from them.

15.4.3 Stock standard solutions must be replaced after one year, or sooner, if comparision with check standards indicates a problem.

15.4.4 Prepare calibration standards at a minimum of five concentration levels ranging from 1 ng/uL to 10 ng/uL by first diluting the stock standard 10:1 with acetonitrile, giving a daughter solution of 0.1 ug/uL. Accurately pipette 100 uL, 300 uL, 500 uL, 700 uL and 1000 uL of the daughter solution (0.1 ug/uL) into each 10 mL volumetric flask, respectively. Dilute to mark with acetonitrile. One of the concentration levels should be at a concentration near, but above, the method detection limit (MDL). The remaining concentration levels should correspond to the expected range of concentrations found in real samples or should define the working range of the HPLC. [Note: Calibration standards must be replaced after six months, or sooner, if comparison with check standards indicates a problem.]

15.4.5 Analyze each calibration standard (at lease five levels) three times. Tabulate area response vs. mass injected. All calibration runs are performed as described for sample analysis in Section 15.5.1. Typical retetion times for specific PAHs are illustrated in Table 8.0. Linear response is indicated where a correlation coefficient of at least 0.999 for a linear least-squares fit of the data (concentration versus area response) is obtained. The retention times for each analyte should agree within ± 2%.

15.4.6 Once linear response has been documented, an intermediate concentration standard near the anticipated levels for each component, but at least 10 times the detection limit, should be chosen for a daily calibration check. The response for the various components should be within 15% day to day. If greater variability is observed, recalibration may be required or a new calibration curve must be developed from fresh standards.

15.4.7 The response for each component in the daily calibration standard is used to calculate a response factor according to the following equation:

$$RF_C = \frac{C_C \times V_I}{R_C}$$

Where

RF_C = response factor (usually area counts) for the component of interest in nanograms injected/ response unit.

C_C = concentration (mg/L) of analyte in the daily calibration standard.

V_I = volume (uL) of calibration standard injected.

R_C = response (area counts) for analyte in the calibration standard.

15.5 Sample Analysis

15.5.1 A 100 uL aliquot of the sample is drawn into a clean HPLC injection syringe. The sample injection loop (10 uL) is loaded and an injection is made. The data system, if avaible, is activated simultaneously with the injection and the point of injection is marked on the strip-chart recorded.

15.5.2 After approximately one minute, the injection valve is returned to the "load" position and the syringe and valve are flushed with water in preparation for the next sample analysis.

15.5.3 After elution of the last component of interest, concentrations are calculated as described in Section 16.2.3. [Note: Table 8.0 illustrates typical retention times associates with individual PAHs, while Figure 17 represent a typical chromatogram associates with fluorescence detection.]

15.5.4 After the last compound of interest has eluted, establish a stable baseline; the system can be now used for further sample analyses as described above.

15.5.5 If the concentration of analyte exceeds the linear range of the instrument, the sample should be diluted with mobile phase, or a smaller volume can be injected into the HPLC.

15.5.6 Calculate surrogate standard recovery on all samples, blanks and spikes. Calculate the percent difference by the following equation:

$$\% \text{ difference} = \frac{S_R - S_I}{S_I} \times 100$$

Where

S_I = surrogate injected, ng.
S_R = surrogate recovered, ng.

15.5.7 Once a minimum of thirty samples of the same matrix have been analyzed, calculte the averge percent recovery (%R) and standard deviation of the percent recovery (SD) for the surrogate.

15.5.8 For a given matrix, calculate the upper and lower control limit for method performance for the surrogate standard. This should be done as follows:

Upper Control Limit (UCL) = (%R) + 3(SD)

Lower Control Limit (LCL) = (%R) - 3(SD)

The surrogate recovery must fall within the control limits. If recovery is not within limits, the following is required.

- o Check to be sure there are no errors in calculations surrogate solutions and internal standards. Also, check instrument performance.
- o Recalculate the data and/or reanalyze the extract if any of the above checks reveal a problem.
- o Reextract and reanalyze the sample if none of the above are a problem or flag the data as "estimated concentration."

15.5.9 Determine the concentration of each analyte in the sample according to Sections 17.1 and 17.2.3.

15.6 HPLC System Performance

15.6.1 The general appearance of the HPLC system should be similar to that illustrated in Figure 10.

15.6.2 HPLC system efficiency is calculated according to the following equation:

$$N = 5.54 \quad \frac{t_r^{\,2}}{W_{1/2}}$$

where:

N = column efficiency (theoretical plates).

t_r = retention time (seconds) of analyte.

$W_{1/2}$ = width of component peak at half height (seconds).

A column efficiency of >5,000 theoretical plates should be obtained.

15.6.3 Precision of response for replicate HPLC injections should be ±10% or less, day to day, for analyte calibration standards at 1 ug/mL or greater levels. At 0.5 ug/mL level and below, precision of replicate analyses could vary up to 25%. Precision of retention times should be ±2% on a given day.

15.6.4 From the calibration standards, area responses for each PAH compound can be used against the concentrations to establish working calibration curves. The calibration curve must be linear and have a correlation coefficient greater than 0.98 to be acceptable.

15.6.5 The working calibration curve should be checked daily with an analysis of one or more calibration standards. If the observed response (r_p) for any PAH varies by more than 15% from the predicted response (r_p), the test method must be repeated with new calibration standards. Alternately a new calibration curve must be prepared. [Note: If $\frac{r_o - r_p}{r_p}$ >15%, recalibration is necessary.]

15.7 HPLC Method Modification

15.7.1 The HPLC procedure has been automated by Acurex Corporation as part of their "Standard Operating Procedure for Polynuclear Aromatic Hydrocarbon Analysis by High Performance Liquid Chromatography Methods," as reported in Reference 9 of Section 18.

15.7.2 The system consists of a Spectra Physics 8100 Liquid Chromatograph, a micro-processor-controlled HPLC, a ternary gradient generator, and an autosampler (10 uL injection loop).

15.7.3 The chromatographic analysis involves an automated solvent program allowing unattended instrument operation. The

solvent program consists of four timed segments using varying concentrations of acetonitrile in water with a constant flow rate, a constant column temperature, and a 10-minute equilibration time, as outlined below.

AUTOMATED HPLC WORKING PARAMETERS

Time	Solvent Composition	Temperature	Rate
10 minutes equilibration	40% Acetonitrile 60% Water	27.0 ± 2°C	1 mL/min
T=0	40% Acetonitrile 60% Water		
T=25	100% Acetonitrile		
T=35	100% Acetonitrile		
T=45	40% Acetonitrile 60% Water		

Table 9.0 outlines the associated PAHs with their minimum detection limits (MDL) which can be detected employing the automated HPLC methodology.

15.7.4 A Vydac or equivalent analytical column packed with a C_{18} bonded phase is used for PAH separation with a reverse phase guard column. The optical detection system consists of a Spectra Physics 8440 variable Ultraviolet (UV)/Visible (VIS) wavelength detector and a Perkin Elmer LS-4 Fluorescence Spectrometer. The UV/VIS detector, controlled by remote programmed commands, contains a Deuterium lamp with wavelength selection between 150 and 600 nanometers. It is set at 254 nanometers with the time constant (detector response) at 1.0 seconds.

15.7.5 The LS-4 Fluorescence Spectrometer contains separate excitation and emission monochromators which are positioned by separate microprocessor-controlled stepper motors. It contains a Xenon discharge lamp, side-on photomultiplier and a 3-microliter illuminated volume flow cell. It is equipped with a wavelength programming facility to set the monochromators automatically to a given wavelength position. This greatly enhances selectivity by changing

the fluorescence excitation and emission detection wavelengths during the chromatographic separation in order to optimize the detection of each PAH. The excitation wavelengths range from 230 to 720 nanometers; the emission wavelengths range from 250 to 800 nanometes. The excitation and emission slits are both set at 10 nanometers nominal bandpass.

15.7.6 The UV detector is used for determining naphthalene, acenapthylene and acenapthene, and the fluorescence detector is used for the remaining PAHs. Table 9 outlines the detection techniques and minimum detection limit (MDL) employing this HPLC system. A Dual Channel Spectra Physics (SP) 4200 computing integrator, with a Labnet power supply, provides data analysis and a chromatogram. An IBM PC XT with a 10-megabyte hard disk provides data storage and reporting. Both the SP4200 and the IBM PC XT can control all functions of the instruments in the series through the Labnet system except for the LS-4, whose wavelength program is started with a signal from the High Performance Liquid Chromatograph autosampler when it injects. All data are transmitted to the XT and stored on the hard disk. Data files can later be transmitted to floppy disk storage.

16.0 Quality Assurance/Quality Control

16.1 General System QA/QC

16.1.1 Each laboratory that uses these methods is required to operate a formal quality control program. The minimum requirements of this program consist of an initial demonstration of laboratory capability and an ongoing analysis of spiked samples to evaluate and document quality data. The laboratory must maintain records to document the quality of the data generated. Ongoing data quality checks are compared with established performance criteria to determine if the results of analyses meet the performance characteristics of the method. When results of sample spikes indicate a typical method performance, a quality control check standard must be analyzed to confirm that the measurements were performed in an in-control mode of operation.

16.1.2 Before processing any samples, the analyst should demonstrate, through the analysis of a reagent solvent blank, that interferences from the analytical system, glassware, and reagents are under control. Each time a set of samples is extracted or there is a change in reagents, a reagent solvent blank should be processed as a safeguard against chronic laboratory contamination. The blank samples should be carried through all stages of the sample preparation and measurement steps.

16.1.3 For each analytical batch (up to 20 samples), a reagent blank, matrix spike and deuterated/surrogate samples must be analyzed (the frequency of the spikes may be different for different monitoring programs). The blank and spiked samples must be carried through all stages of the sample preparation and measurement steps.

16.1.4 The experience of the analyst performing gas chromatography and high performance liquid chromatography is invaluable to the success of the methods. Each day that analysis is performed, the daily calibration sample should be evaluated to determine if the chromatographic system is operating properly. Questions that should be asked are: Do the peaks look normal?; Is the response windows obtained comparable to the response from previous calibrations? Careful examination of the standard chromatogram can indicate whether the column is still good, the injector is leaking, the injector septum needs replacing, etc. If any changes are made to the system (e.g., column changed), recalibration of the system must take place.

16.2 Process, Field, and Solvent Blanks

16.2.1 One cartridge (XAD-2 or PUF) and filter from each batch of approximately twenty should be analyzed, without shipment to the field, for the compounds of interest per to serve as a process blank. A blank level of less than 10 ng per cartridge/filter assembly for single PAH component is considered to be acceptable.

16.2.2 During each sampling episode, at least one cartridge and filter should be shipped to the field and returned, without drawing air through the sampler, to serve as a field blank.

16.2.3 During the analysis of each batch of samples at least one solvent process blank (all steps conducted but no cartridge or filter included) should be carried through the procedure and analyzed. Blank levels should be less than 10 ng/sample for single components to be acceptable.

16.2.4 Because the sampling configuration (filter and backup adsorbent) has been tested for targeted PAHs in the laboratory in relationship to collection efficiency and has been demonstrated to be greater than 95% for targeted PAHs, no field recovery evaluation will occur as part of the QA/QC program outlined in this section.

16.3 Gas Chromatography with Flame Ionization Detection

16.3.1 Under the calibration procedures (internal and external), the % RSD of the calibration factor should be <20% over the linear working range of a five point calibration curve (Sections 13.4.1.6 and 13.4.2.6).

16.3.2 Under the calibration procedures (internal and external), the daily working calibration curve for each analyte should not vary from the predicted response by more than ±20% (Sections 13.4.1.7 and 13.4.2.8).

16.3.3 For each analyte, the retention time window must be established (Section 13.5.1), verified on a daily basis (Section 13.6.3.2) and established for each analyte throughout the course of a 72-hour period (Section 13.5.3).

16.3.4 For each analyte, the mid-level standard must fall within the retention time window on a daily basis as a qualitative performance evaluation of the GC system (Section 13.6.3.4).

16.3.5 The surrogate standard recovery must not deviate from 100% by no more than 20% (Section 13.6.3.5).

16.4 Gas Chromatography with Mass Spectroscopy Detection

16.4.1 Section 14.5.1 requires the mass spectrometer be tuned daily with DFTPP and meet relative ion abundance requirements outlined in Table 3.

16.4.2 Section 14.3.1.1 requires a minimum of five concentration levels of each analyte (plus deuterated internal standards) be prepared to establish a calibration factor to illustrate <20% variance over the linear working range of the calibration curve.

16.4.3 Section 14.3.1.13 requires the verification of the working curve each working day (if using the external standard technique) by the measurement of one or more calibration standards. The predicted response must not vary by more than ±20%.

16.4.4 Section 14.3.2.6 requires the initial calibration curve be verified each working day (if using the internal standard technique) by the measurement of one or more calibration standards. If the response varies by more than ±20% of predicted response, a fresh calibration curve (five point) must be established.

16.4.5 Section 14.4.5 requires that for sample analysis, the comparison between the sample and reference spectrum illustrate:

(1) Relative intensities of major ions in the reference spectrum (ions >10% of the most abundant ion) should be present in the sample spectrum.

(2) The relative intensities of the major ions should agree within ±20%. (Example: For an ion with an abundance of 50% in the standard spectrum, the corresponding sample ion abundance must be between 30 and 70%).

(3) Molecular ions present in the reference spectrum should be present in sample the spectrum.

(4) Ions present in the sample spectrum but not in the reference spectrum should be reviewed for possible background contaminatiuon or presence of coeluting compounds.

(5) Ions present in the reference spectrum but not in the sample spectrum should be reviewed for possible subtraction from the sample spectrum because of background contamination or coeluting peaks. Data system library reduction programs can sometimes create these discrepancies.

17.2.2 GC/MS Detection

17.2.2.1 When an analyte has been identified, the quantification of that analyte will be based on the integrated abundance from the monitoring of the primary characteristic ion. Quantification will take place using the internal standard technique. The internal standard used shall be the one nearest the retention time of that of a given analyte (see Section 14.3.2.1).

17.2.2.2 Calculate the concentration of each identified analyte in the sample as follows:

$$\text{Concentration, ng/m}^3 = \frac{[(A_x)(I_s)(V_t)(D)]}{[(A_{is})(RF)(V_i)(V_s)]}$$

Where

A_x = area of characteristic ion(s) for analyte being measured.

I_s = amount of internal standard injected, ng.

V_t = volume of total sample, uL.

D = dilution factor, if dilution was made on the sample prior to analysis. If no dilution was made, D = 1, dimensionless.

A_{is} = area of characteristic ion(s) for internal standard.

RF = Response factor for analyte being measured, Section 14.3.2.5.

V_i = volume of analyte injected, uL.

V_s = total sample volume (m^3) at standard temperature and pressure (25°C and 760 mm Hg), Section 17.1.3.

17.2.3 HPLC Detection

17.2.3.1 The concentration of each analyte in the sample may be determined from the external standard technique by calculating response factor and peak response using the calibration curve.

17.2.3.2 The concentration of a specific analyte is calculated as follows:

$$\text{Concentration, ng/m}^3 = \frac{[(RF_c)(A_x)(V_t)(D)]}{[(V_i)(V_s)]}$$

Where

RF_c = response factor (nanograms injected per area counts) calculated in Section 15.4.7.

A_x = response for the analyte in the sample, area counts or peak height.

V_t = volume of total sample, uL.

D = dilution factor, if dilution was made on the sample prior to analysis. If no dilution was made, D = 1, dimensionless.

V_i = volume of sample injected, uL.

V_s = total sample volume (m^3) at standard temperature and pressure (25°C and 760 mm Hg), Section 17.1.3.

17.3 Sample Concentration Conversion From ng/m^3 to ppbv

17.3.1 The concentrations calculated in Section 17.2 can be converted to ppbv for general reference.

17.3.2 The analyte concentration can be converted to ppbv using the following equation:

$$C_A \text{ (ppbv)} = C_A \text{ (ng/m}^3\text{)} \times \frac{24.4}{MW_A}$$

Where

C_A = concentration of analyte, ng/m^3, calculated according to Sections 17.2.1 through 17.2.3.

MW_A = molecular weight of analyte, g/g-mole

24.4 = molar volume occupied by ideal gas at standard temperature and pressure (25°C and 760 mm Hg), l/mole.

18.0 BIBLIOGRAPHY

1. Dubois, L., Zdrojgwski, A., Baker, C., and Monknao J.L., "Some Improvement in the Determination of Benzo[a]Pyrene in Air Samples," Air Pollution Control Association J., 17:818-821, 1967.
2. Intersociety Committee "Tentative Method of Analysis for Polynuclear Aromantic Hydrocarbon of Atmospheric Particulate Matter, Health Laboratory Science, Vol. 7, No. 1, pp. 31-40, January, 1970.
3. Cautreels, W., and Van Cauwenberghe, K., "Experiments on the Distribution of Organic Pollutants Between Airborne Particulate Matter and Corresponding Gas Phase", Atmos. Environ., 12:1133-1141 (1978).
4. "Tentative Method of Microanalysis for Benzo[a]Pyrene in Airborne Particules and Source Effluents," American Public Health Association, Health Laboratory Science, Vol 7, No. 1, pp. 56-59, January, 1970.
5. "Tentative Method of Chromatographic Analysis for Benzo[a]Pyrene and Benzo[k]Fluoranthene in Atmospheric Particulate Matter," American Public Health Association, Health Laboratory Science, Vol. 7, No. 1, pp. 60-67, January, 1970.
6. "Tentative Method of Spectrophotometric Analysis for Benzo[a]Pyrene in Atmospheric Particulate Matter," American Public Health Association, Health Laboratory Science, Vol. 7, No. 1, pp. 68-71, January, 1970.
7. Jones, P.W., Wilkinson, J.E., and Strup, P.E., "Measurement of Polycyclic Organic Materials and Other Hazardous Organic Compounds in Stack Gases: State-of-art," U.S. EPA-600/2-77-202, 1977.
8. "Standard Operating Procedure for Ultrasonic Extraction and Analysis of Residual Benzo[a]Pyrene from Hi-Vol Filters via Thin-Layer Chromatography", J.F. Walling, U.S. Environmental Protection Agency, Environmental Monitoring Systems Laboratory, Methods Development and Analysis Division, Research Triangle Park, N.C., EMSL/RTP-SOP-MDAD-015, December, 1986.
9. "Standard Operating Procedure for Polynuclear Aromantic Hydrocarbon Analysis by High Performance Liquid Chromatography Methods," Susan Rasor, Acurex Corporation, Research Triangle Park, N.C., 1978.
10. Rapport, S.W., Wang, Y.Y., Wei, E.T., Sawyer, R., Watkins, B.E., and Rapport, H., "Isolation and Identification of a Direct-Acting Mutagen in Diesel Exhaust Particulates", Envir. Sci. Technol., 14:1505-1509, 1980.

11. Konlg, J., Balfanz, E., Funcke, W., and Romanowski, T., "Determination of Oxygenated Polycyclic Aromantic Hydorcarbons in Airborne Particulate Matter by Capillary Gas Chromatography and Gas Chromatography/Mass Spectrometry", Anal. Chem., Vol. 55, pp. 599-603, 1983.

12. Chuang, J. C., Bresler,W. E. and Hannan, S. W.,"Evaluation of Polyurethane Foam Cartridges for Measurement of Polynuclear Aromantic Hydrocarbons in Air," U.S. Environmental Protection Agency, Environmental Monitoring Systems Laboratory, Methods Development and Analysis Division, Research Triangle Park, N.C., EPA-600/4-85-055, September, 1985.

13. Chuang, J.C., Hannan, S.W., and Kogtz, J. R., "Stability of Polynuclear Aromantic Compounds Collected from Air on Quartz Fiber Filters and XAD-2 Resin," U.S. Environmental Protection Agency, Environmental Monitoring Systems Laboratory, Methods Development and Analysis Division, Research Triangle Park, N.C., EPA-600/4-86-029, September, 1986.

14. Feng, Y. and Bidleman, T.F., "Influence of Volatility on the Collection of Polynuclear Aromantic Hydrocarbon Vapors with Polyurethane Foam", Envir. Sci. Technol., 18:330-333, 1984.

15. Yamasaki, H., Kuwata, K., and Miyamoto, H., "Effects of Ambient Temperature on Aspects of Airborne Polycyclic Aromantic Hydrocarbons", Envir. Sci. Technol., Vol. 16, pp. 189-194, 1982.

16. Chuang, J.C., Hannan, S.W. and Kogtz, J. R., "Comparison of Polyurethane Foam and XAD-2 Resin as Collection Media for Polynuclear Aromantic Hydrocarbons in Air," U.S. Environmental Protection Agency, Environmental Monitoring Systems Laboratory, Methods Development and Analysis Division, Research Triangle Park, N.C., EPA-600/4-86-034, December, 1986.

17. Chuang, J. C., Mack, G. A., Mondron, P. J. and Peterson, B. A., "Evaluation of Sampling and Analyjtical Methodology for Polynuclear Aromatic Compounds in Indoor Air," Environmental Protection Agency, Environmental, Monitoring Systems Laboratory, Methods Development and Analysis Division, Research Triangle Park, N.C., EPA-600/4-85-065, January, 1986.

18. Methods for Organic Chemical Analysis of Municipal and Industrial Wastewater, U.S. Environmental Protection Agency, Environmental Monitoring and Support Laboratory, Cincinnati, OH, EPA-600/4-82-057, July 1982.

19. ASTM Annual Book of Standards, Part 31, D 3694. "Standard Practice for Preparation of Sample Containers and for Preservation," American Society for Testing and Materials, Philadelphia, PA, p. 679, 1980.

20. Burke, J.A., "Gas Chromatography for Pesticle Residue Analysis; Some Practical Aspects," Journal of the Association of Official Analytical Chemists, Vol. 48, p. 1037, 1965.

21. Cole, T., Riggins, R., and Glaser, J., "Evaculation of Method Detection Limits an Analytical Curve for EPA Merhod 610 - PNAs," International Symposium on Polynuclear Aromantic Hydrocarbons, 5th, Battelle Columbus Laboratory, Columbus, Ohio, 1980.

22. "Handbook of Analytical Quality Control in Water and Wastewater Laboratories, "U.S. Environmental Protection Agency, Environmental Monitoring and Support Laboratory, Cincinnati, Ohio 45268, EPA-600/4-79-019, March, 1979.

23. ASTM Annual Book of Standards, Part 31, D 3370, "Standard Practice for Sampling Water," American Society for Testing and Materials, Philadelphia PA, p. 76, 1980.

24. Protocol for the Collection and Analysis of Volatile POHC's (Principal Organic Hazardous Constituents) using VOST (Volatile Organic Sampling Train), PB84-170042, EPA-600/8-84-007, March, 1984.

25. Sampling and Analysis Methods for Hazardous Waste Combustion - Methods 3500, 3540, 3610, 3630, 8100, 8270, and 8310; Test Methods For Evaluating Solid Waste (SW-846), U.S. EPA, Office of Solid Waste, Washington, D.C.

26. Chuang, C.C. and Peterson, B.A., "Review of Sampling and Analysis Methodology for Polunuclear Aromantic Compounds in Air from Mobile Sources", Final Report, EPA-600/S4-85-045, August, 1985.

27. "Measurement of Polycyclic Organic Matter for Environmental Assessment," U.S. Environmental Protection Agency, Industrial Environmental Research Laboratory, Research Triangle Park, N.C., EPA-600/7-79-191, August, 1979.

28. "Standard Operating Procedure No. FA 113C: Monitoring For Particulate and Vapor Phase Pollutants Using the Portable Particulate/Vapor Air Sampler," J.L. Hudson, U.S. Environmental Protection Agency, Region VII, Environmental Monitoring and Compliance Branch, Environmental Services Division, Kansas City, Kansas, March, 1987.

29. Technical Assistance Document for Sampling and Analysis of Toxic Organic Compounds in Ambient Air, U.S. Environmental Protection Agency, Environmental Monitoring Systems Laboratory, Quality Assurance Division, Research Triangle Park, N.C., EPA-600/4-83-027, June, 1983.

30. Winberry, W. T., Murphy, N.T., Supplement to Compendium of Methods for the Determination of Toxic Organic Compounds in Ambient Air, U.S. Environmental Protection Agency, Environmental Monitoring Systems Laboratory, Quality Assurance Division, Research Triangle Park, N.C., EPA-600/4-87-006, September, 1986.

31. Riggins, R. M., Compendium of Methods for the Determination of Toxic Organic Compounds in Ambient Air, U.S. Environmental Protection Agency, Environmental Monitoring Systems Laboratory, Quality Assurance Division Research Triangle Park, N.C., EPA-600/4-84-041, April, 1984.

32. Quality Assurance Handbook for Air Pollution Measurement Systems, Volume II - "Ambient Air Specific Methods," Section 2.2 - "Reference Method for the Determination of Suspended Particulates in the Atmosphere," Revision 1, July, 1979, EPA-600/4-77-027A.

33. ASTM Annual Book of Standards, Part 31, D 3694. "Standard Practice for Preparation of Sample Containers and for Preservation," American Society for Testing and Materials, Philadelphia, PA, p. 679, 1980.

34. "HPLC Troubleshooting Guide - How to Identify, Isolate, and Correct Many HPLC Problems," Supelco, Inc., Supelco Park, Bellefonte, PA, 16823-0048, Guide 826, 1986.

35. "Carcinogens - Working With Carcinogens," Department of Health, Education, and Welfare, Public Health Service, Center for Disease Control, National Institute for Occupational Safety and Health, Publication No. 77-206, August, 1977.

36. "OSHA Safety and Health Standards, General Industry," (29CFR1910), Occupational Safety and Health Administration, OSHA 2206, Revised, January, 1976.

37. "Safety in Academic Chemistry Laboratories," American Chemical Society Publication, Committee on Chemical Safety, 3rd Edition, 1979.

38. Hudson, J., "Monitoring for Particulate And Vapor Phase Pollutants Using A Portable Particulate/Vapor Air Sampler - Standard Operating Procedure No. SA-113-C", U.S. Environmental Protection Agency, Region VII, Environmental Services Division, 25 Funston Road, Kansas City, Kansas, 66115.

TABLE 1.0 FORMULAE AND PHYSICAL PROPERTIES OF SELECTIVE PAHs

	FORMULA	MOLECULAR WEIGHT	MELTING POINT °C	BOILING POINT °C	CASE #
Acenaphthene	$C_{12}H_{10}$	154.21	96.2°	279	83-32-9
Acenaphthylene	$C_{12}H_8$	152.20	92-93	265-275	208-96-8
Anthracene	$C_{14}H_{10}$	178.22	218°	342	120-12-7
Benzo(a)anthracene	$C_{18}H_{12}$	228.29	158-159	-	56-55-3
Benzo(a)pyrene	$C_{20}H_{12}$	252.32	177°	310-312	50-32-8
Benzo(b)fluoranthene	$C_{20}H_{12}$	252.32	168	-	205-99-2
Benzo(e)pyrene	$C_{20}H_{12}$	252.32	178-179	-	192-92-2
Benzo(g,h,i)perlene	$C_{22}H_{12}$	276.34	273	-	191-24-2
Benzo(k)fluoranthene	$C_{20}H_{12}$	252.32	217	480	207-08-9
Chrysene	$C_{18}H_{12}$	228.29	255-256	-	218-01-9
Dibenzo(a,h)anthracene	$C_{22}H_{14}$	278.35	262	-	53-70-3
Fluoranthene	$C_{16}H_{10}$	202.26	110	-	206-44-0
Fluorene	$C_{13}H_{10}$	166.22	116-117	293-295	86-73-7
Indeno(1,2,3-cd)pyrene	$C_{22}H_{12}$	276.34	161.5-163	-	193-39-5
Naphthalene	$C_{10}H_8$	128.16	80.2	217.9	91-20-3
Phenanthrene	$C_{14}H_{10}$	178.22	100°	340	85-01-8
Pyrene	$C_{16}H_{10}$	202.26	156	399	129-00-0

*Many of these compounds sublime.

TABLE 2.0 RETENTION TIMES FOR SELECTIVE PAHs FOR PACKED AND CAPILLARY COLUMNS

Compound	Packed[1]	Capillary[2]
Acenaphthene	10.8	16.8
Acenaphthylene	10.4	15.9
Anthracene	15.9	20.7
Benzo(a)anthracene	20.6	29.1
Benzo(a)pyrene	29.4	36.2
Benzo(b)fluoranthene	28.0	34.2
Benzo(ghi)perylene	38.6	48.4
Benzo(k)fluoranthene	28.0	34.4
Chrysene	24.7	29.3
Dibenzo(a,h)anthracene	36.2	46.1
Fluoranthene	19.8	24.3
Fluorene	12.6	18.1
Indeno(1,2,3-cd)pyrene	36.2	45.6
Naphthalene	4.5	11.0
Phenanthrene	15.9	20.6
Pyrene	20.6	25.0

[1]GC conditions: Chromosorb W-AW-DMCS (100/120 mesh) coated with 3% OV-17, packed in a 1.8-m long x 2 mm ID glass column, with nitrogen carrier gas at a flow rate of 40 mL/min. Column temperature was held at 100°C for 4 min. then programmed at 8°/minute to a final hold at 280°C.

[2]Capillary GC conditions: 30 meter fused silica SPB-5 capillary column; flame ionization detector, splitless injection; oven temperature held at 80 degrees C for 2 minutes, increased at 8 degrees/min. to 280 degrees C.

TABLE 3.0 DFTPP KEY IONS AND ION ABUNDANCE CRITERIA

Mass	Ion Abundance Criteria
51	30-60% of mass 198
68	Less than 2% of mass 69
70	Less than 2% of mass 69
127	40-60% of mass 198
197	Less than 1% of mass 198
198	Base peak, 100% relative abundance
199	5-9% of mass 198
275	10-30% of mass 198
365	Greater than 1% of mass 198
441	Present but less than mass 443
442	Greater than 40% of mass 198
443	17-23% of mass 442

TABLE 4.0 GC AND MS OPERATING CONDITIONS

Chromatography	
Column	Hewlett-Packard Ultra #2 crosslinked 5% phenyl methyl silicone (50 m x 0.25 mm, 0.25 um film thickness) or equivalent
Carrier Gas	Helium velocity 20 cm^3/sec at 250°C
Injection Volume	Constant (1-3 uL)
Injection Mode	Splitless
Temperature Program	
Initial Column Temperature	45°C
Initial Hold Time	1 min
Program	45°C to 100°C in 5 min, then 100°C to 320°C at 8°C/min
Final Hold Time	15 min
Mass Spectrometer	
Detection Mode	Multiple ion detection, SIM mode

TABLE 5.0 CHARACTERISTIC IONS FROM GC/MS DETECTION FOR DEUTERATED INTERNAL STANDARDS AND SELECTED PAHs

Compound	M/Z
D_8-naphthalene	136
D_{10}-phenanthrene	188
Phenathrene	178
Anthracene	178
Fluoranthene	202
D_{10}-pyrene	212
Pyrene	202
Cyclopenta[c,d]pyrene	226
Benz[a]anthracene	228
D_{12}-chrysene	240
Benzo[e]pyrene	252
D_{12}-benzo[a]pyrene	264
Benzo[a]pyrene	252

TABLE 6.0 CHARACTERISTIC IONS FROM GC/MS DETECTION FOR SELECTED PAHs

Compound	Primary		Secondary
Acenaphthene	154	153	152
Acenaphthylene	152	151	153
Anthracene	178	179	176
Benzo(a)anthracene	228	229	226
Benzo(a)pyrene	252	253	125
Benzo(b)fluoranthene	252	253	125
Benzo(ghi)perylene	276	138	277
Benzo(k)fluoranthene	252	253	125
Chrysene	228	226	229
Dibenzo(a,h)anthracene	278	139	279
Fluoranthene	202	101	203
Fluorene	166	165	167
Indeno(1,2,3-cd)pyrene	276	138	227
Naphthalene	128	129	127
Phenanthrene	178	179	176
Pyrene	202	200	203

TABLE 9.0. RETENTION TIMES (RT) AND MINIMUM DETECTION LIMITS (MDLs) FOR SELECTED PAHs USING ULTRAVIOLET AND FLOURESCENCE DETECTION

PAH	Ultraviolet Detector		Flourescence Detector	
	RT	MDL	RT	MDL
Naphthalene	14.0	250pg/uL		
Acenaphthylene	15.85	250pg/uL		
Acenaphthene	18.0	250pg/uL		
Fluorene	18.5	50pg/uL	18.5	5pg/uL
Phenanthrene	19.9	50pg/uL	19.9	10pg/uL
Anthracene	21.0	50pg/uL	21.0	50pg/uL
Fluoranthene	22.5	50pg/uL	22.5	10pg/uL
Pyrene	23.4	50pg/uL	23.4	5pg/uL
Benzo(a)anthracene	26.3	50pg/uL	26.3	5pg/uL
Chrysene	26.7	50pg/uL	26.7	5pg/uL
Benzo(b)fluoranthene	29.3	50pg/uL	29.3	10pg/uL
Benzo(k)fluoranthene	30.2	50pg/uL	30.2	5pg/uL
Benzo(a)pyrene	31.1	50pg/uL	31.1	5pg/uL
Dibenzo(a,h)anthracene	32.7	50pg/uL	32.7	5pg/uL
Benzo(ghi)perylene	33.9	50pg/uL	33.9	5pg/uL
Indeno(1,2,3-cd)pyrene	34.6	50pg/uL	34.6	50pg/uL

RT = Retention time in minutes
MDL = Minimum detection limit

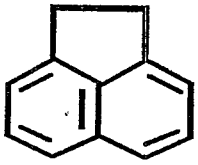
Acenaphthene

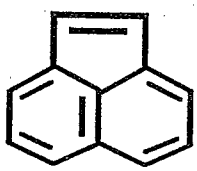
Acenaphthylene

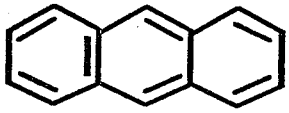
Anthracene

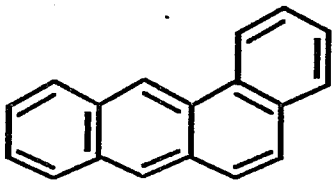
Benzo(a)anthracene

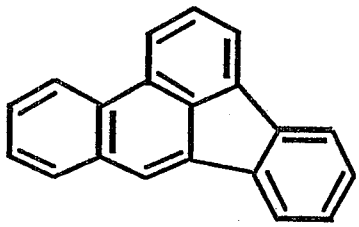
Benzo(b)fluoranthene

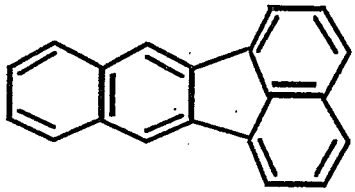
Benzo(k)fluoranthene

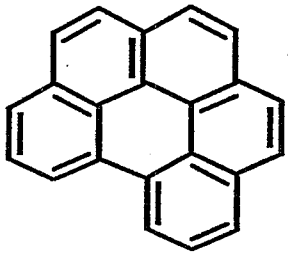
Benzo(g,h,i)perylene

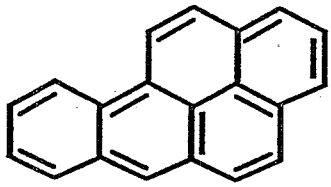
Benzo(a)pyrene

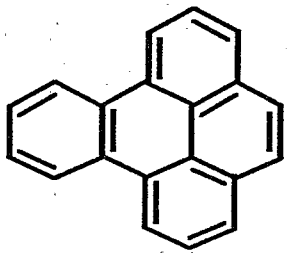
Benzo(e)pyrene

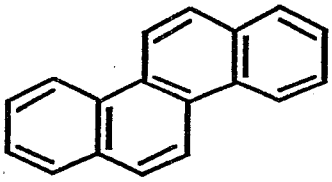
Chrysene

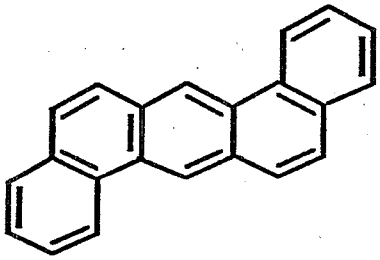
Dibenz(a,h)anthracene

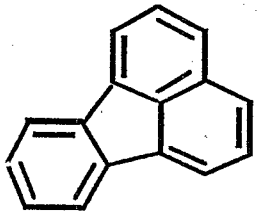
Fluoranthene

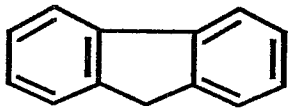
Fluorene

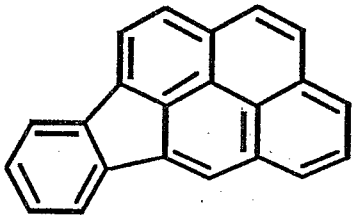
Indeno(1,2,3-c,d)pyrene

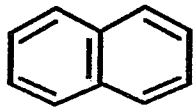
Naphthalene

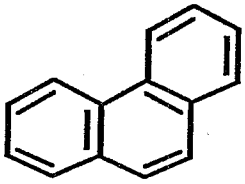
Phenanthrene

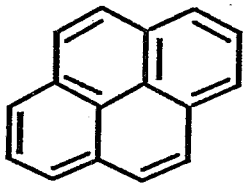
Pyrene

FIGURE 1.0 RING STRUCTURE OF SELECTIVE PAHs.

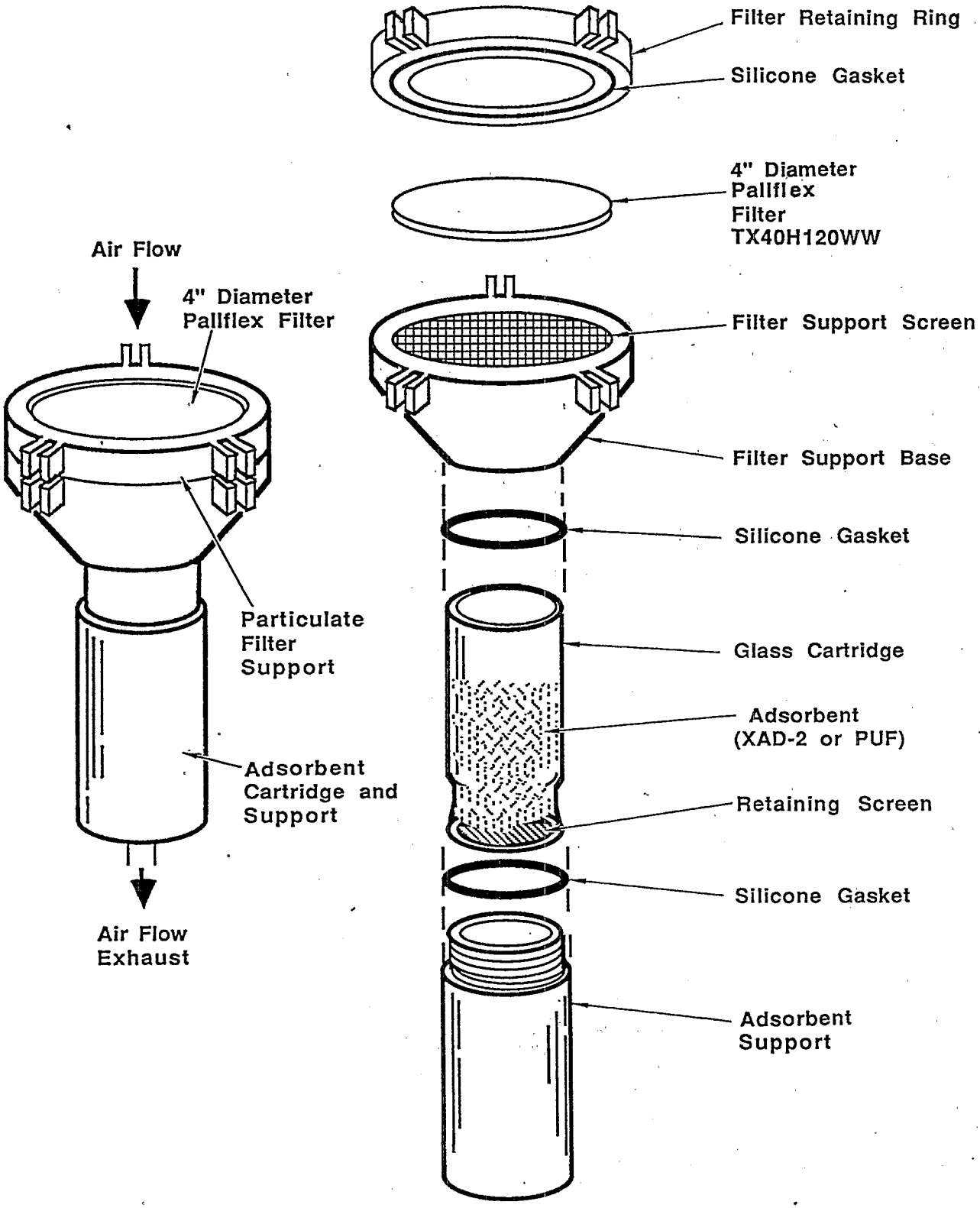

FIGURE 2.0 GENERAL METAL WORKS SAMPLING HEAD

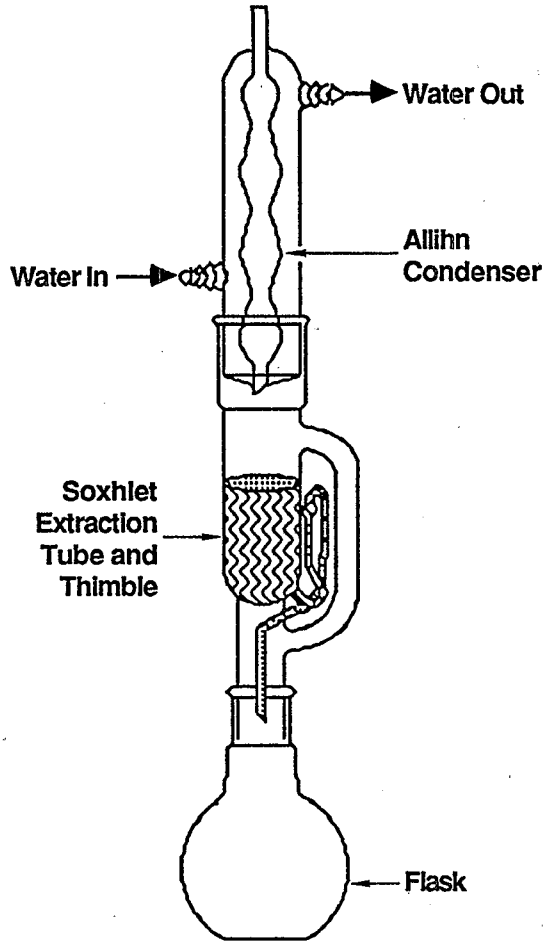

(a) Soxhlet Extraction Apparatus with Allihn Condenser

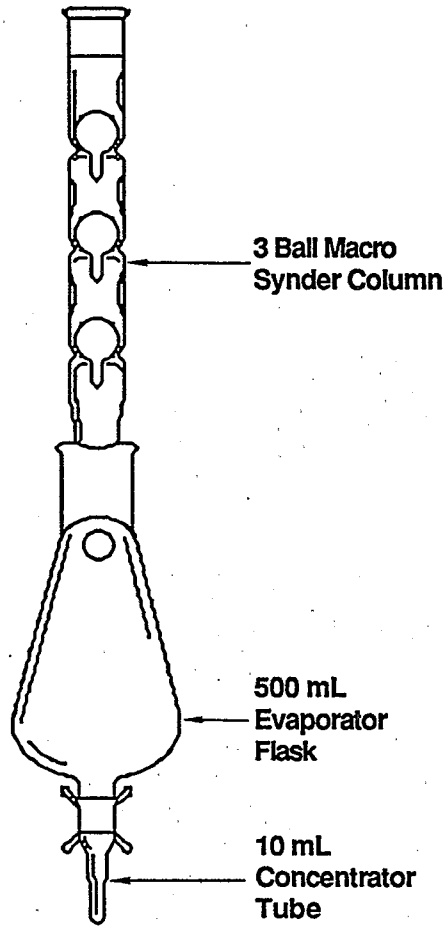

(b) Kuderna-Danish (K-D) Evaporator with Macro Synder Column

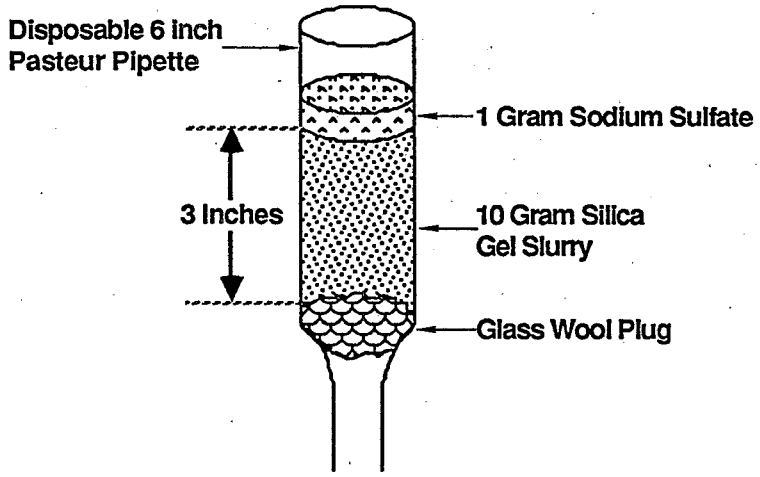

(c) Silica Gel Clean-up Column

FIGURE 3. APPARATUS USES IN SAMPLING ANALYSIS.

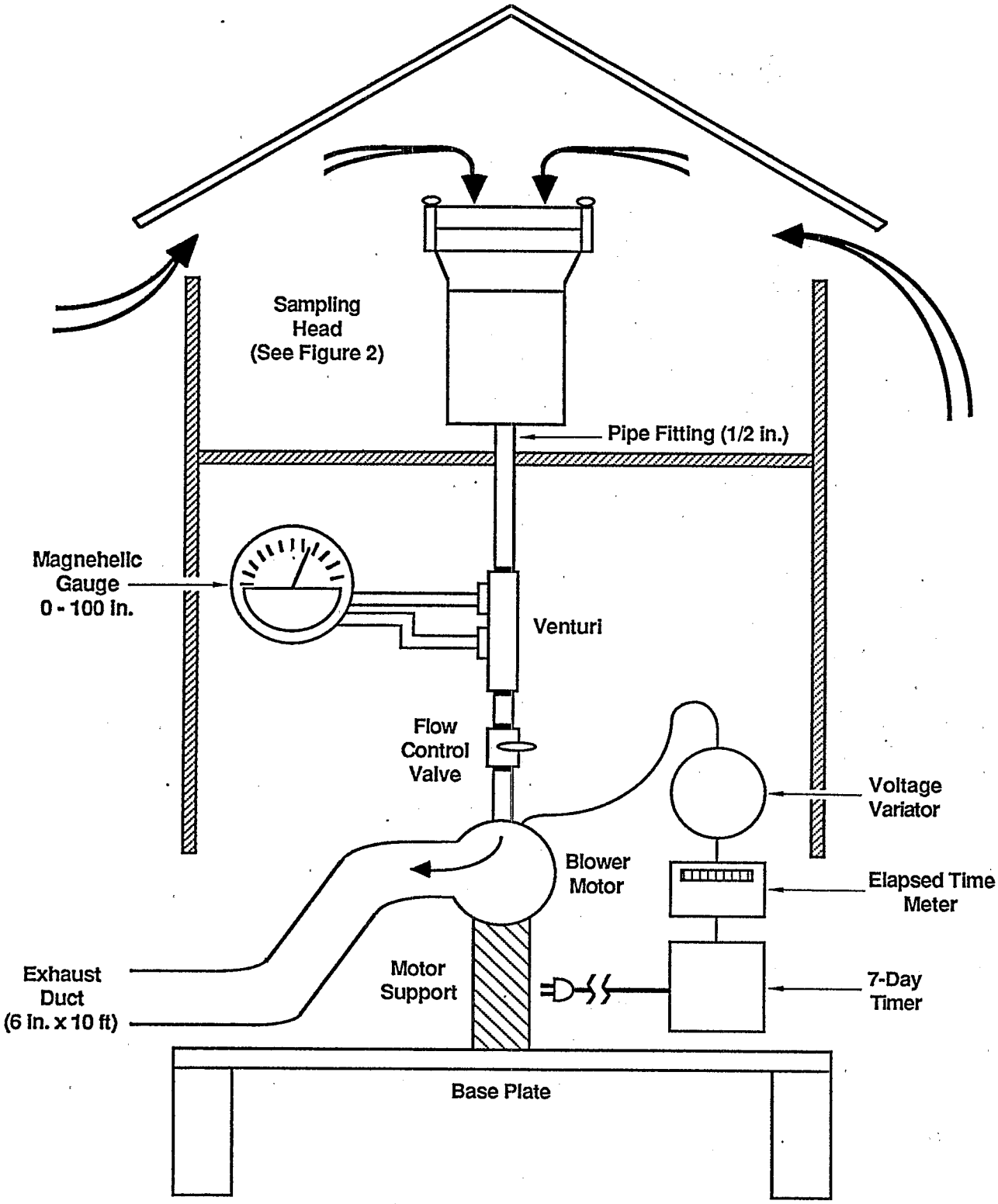

FIGURE 4. MODIFIED HIGH VOLUME AIR SAMPLER

GENERAL METAL WORKS MODEL PS-1 SAMPLER

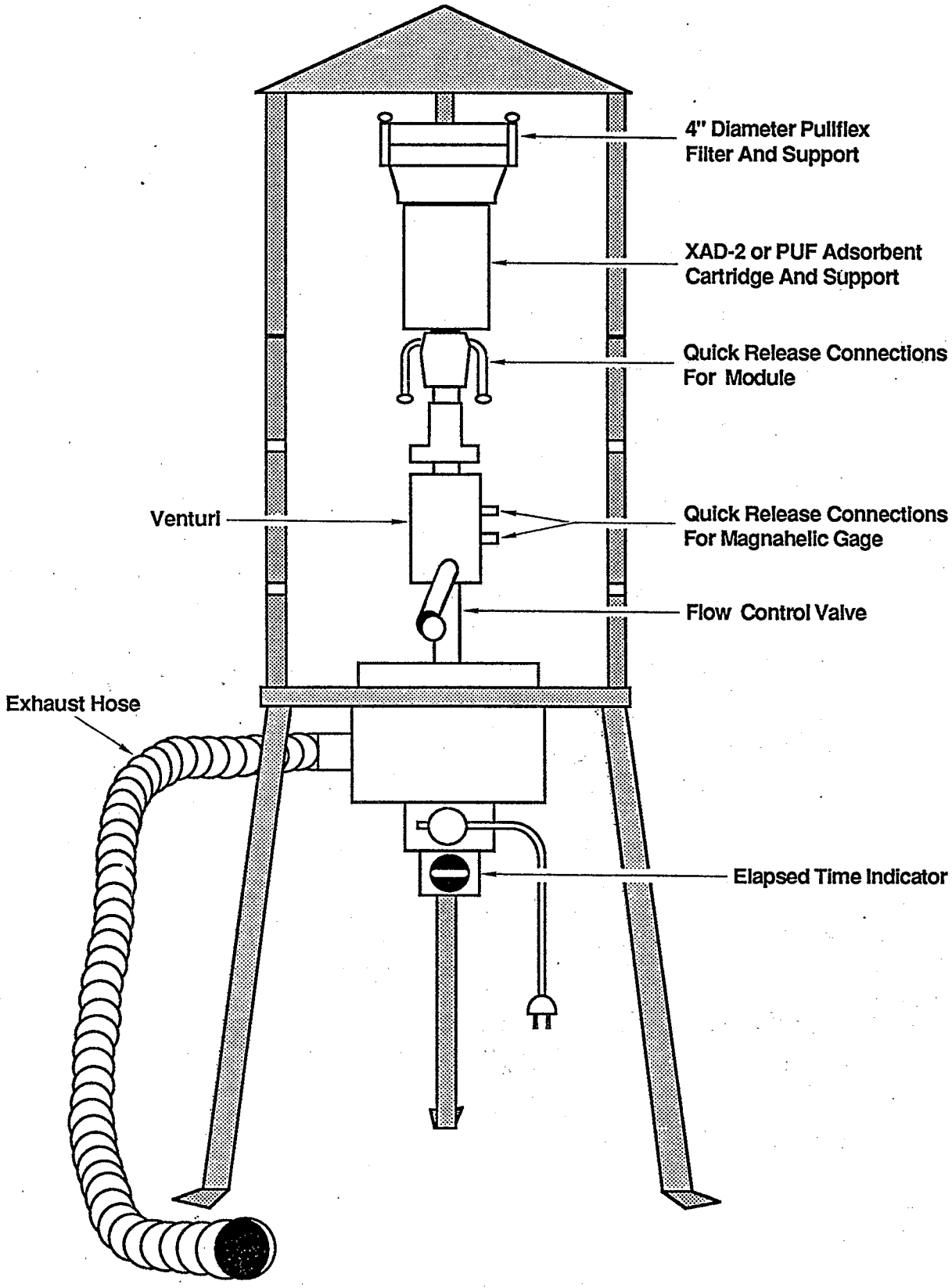

FIGURE 5. PORTABLE HIGH VOLUME AIR SAMPLER

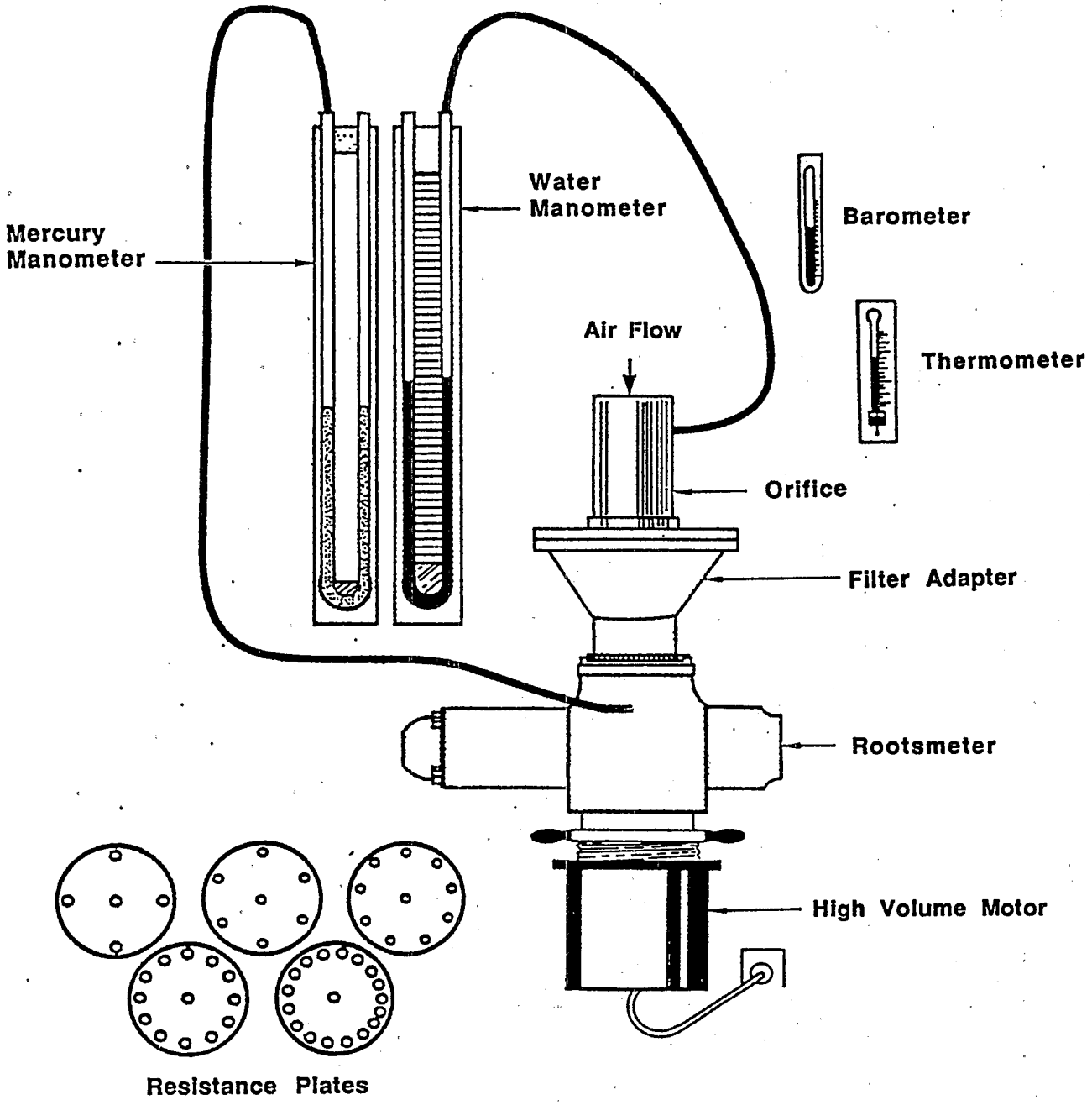

FIGURE 6. LABORATORY ORIFICE CALIBRATION SETUP

T_1 _____ °C _____ K

P_1 _____ mmHg

Orifice No. _____

Roots Meter No. _____

Name _____

Date _____

Resistance Plates (No. of Holes)	Air Volume Measured By Rootsmeter V_m		Standard Volume V_{std} (std m^3)	Time For Air Volume To Pass Through Rootsmeter Θ (min)	Roots Meter Pressure Differential ΔP (mm Hg)	Pressure Drop Across Orifice ΔH (in. H_2O)	x-Axis Standard Flow Rate Q_{std} (std m^3/min)	y-Axis $\sqrt{\Delta H (P_1 / P_{std})(298 / T_1)}$ Value
	(ft^3)	(m^3)						
5	200	5.66						
7	200	5.66						
10	300	8.50						
13	300	8.50						
18	300	8.50						

Factors: $(ft^3)\left(0.02832 \frac{m^3}{ft^3}\right) = m^3$ and (in. Hg) $25.4\left(\frac{mm\ Hg}{in.\ Hg}\right) = mm\ Hg$.

Calculation Equations: 1. $V_{std} = V_m \left(\frac{P_1 - \Delta P}{P_{std}}\right)\left(\frac{T_{std}}{T_1}\right)$ Where: $T_{std} = 298\ K$, $P_{std} = 760.0\ mm\ Hg$

2. $Q_{std} = \frac{V_{std}}{\Theta}$

FIGURE 7. ORIFICE CALIBRATION DATA SHEET.

T013-87

Sampler Site _____

Sampler Location _____

Date _____

	Before	After
Barometric Pressure		
Ambient Temperature		

Site _____ Date _____ Performed By _____

Sampler S/N	Sampling Location I.D.	Height Above Ground	Identification No.		Sampling Period		Totaling Sampling Time, min.	Pump Timer Hr. Min.	Sampler Flow Check[1]				
			Filter	XAD-2 or PUF	Start	Stop			Manometer Δ H, Inches of Water	Q_{xs}	M	Q_{ms}	Within ± 10%

[1] Must Be Performed Before and After Each Sampling Period

Checked By _____

Date _____

FIGURE 10. FIELD TEST DATA SHEET.

T013-90

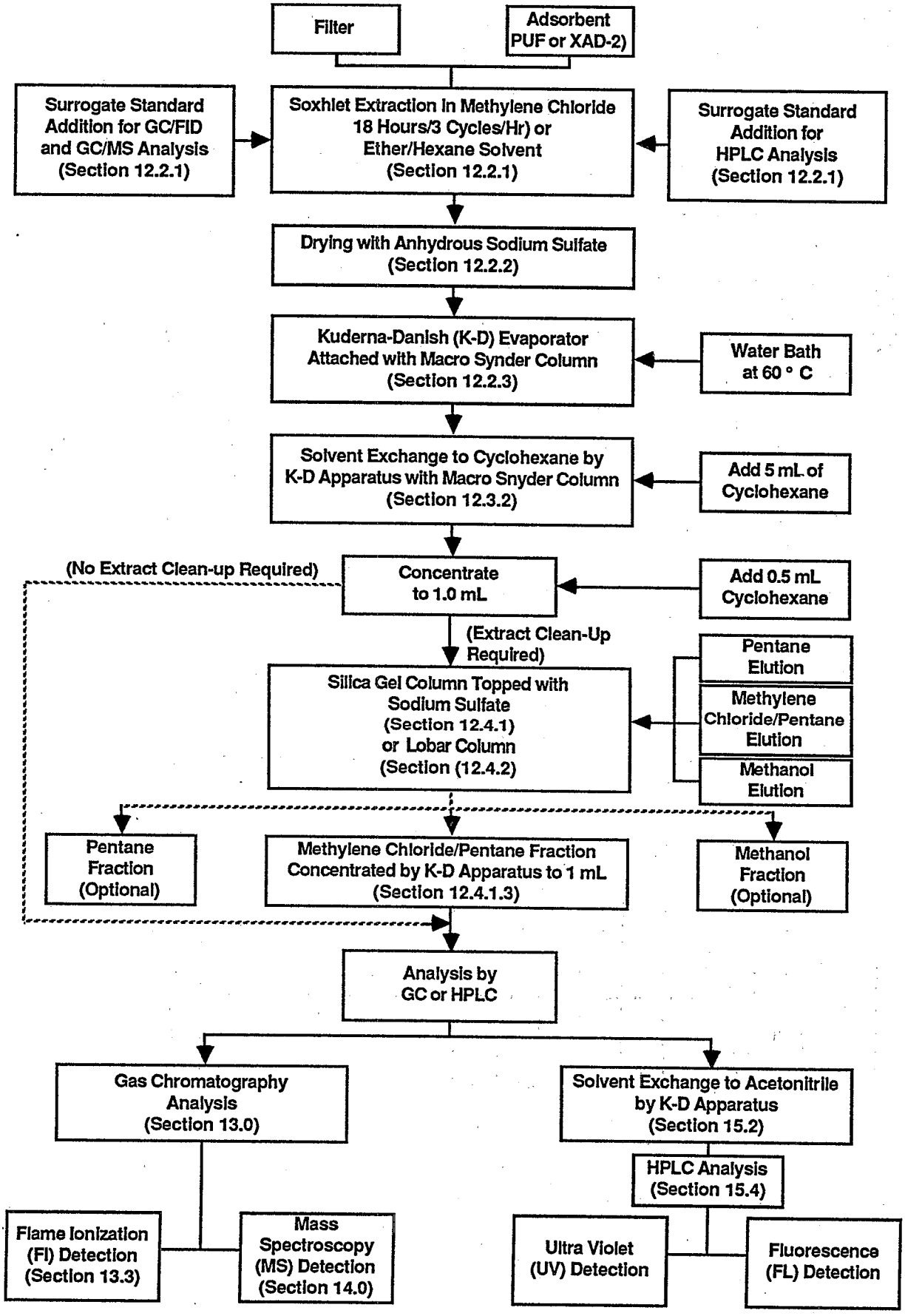

FIGURE 11.0. SAMPLE CLEAN-UP, CONCENTRATION, SEPARATION AND ANALYSIS SEQUENCE.

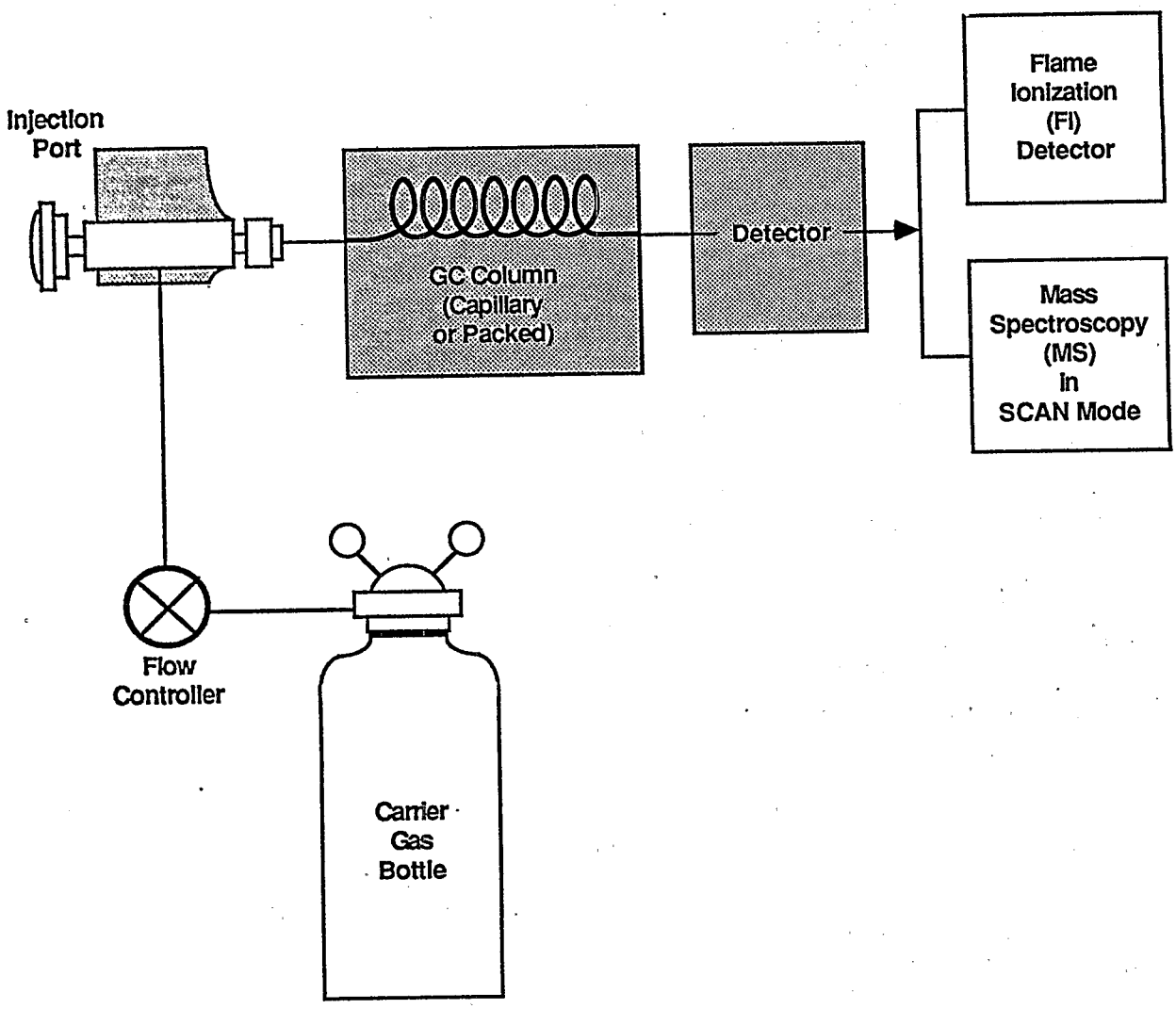

FIGURE 12.0 GC SEPARATION WITH SUBSEQUENT FLAME IONIZATION (FI) OR MASS SPECTROSCOPY (MS) DETECTION.

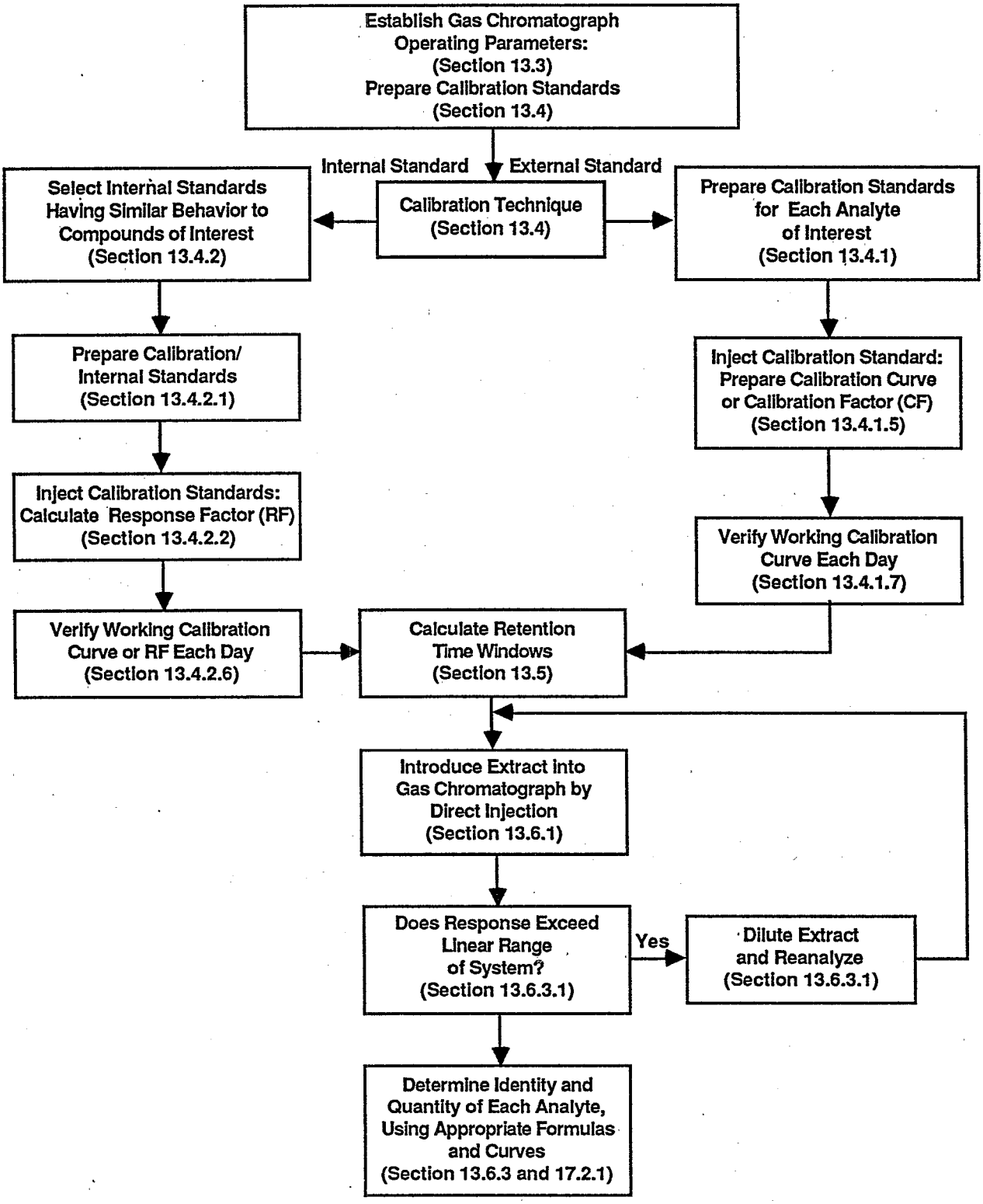

FIGURE 13.0 GC CALIBRATION AND RETENTION TIME WINDOW DETERMINATION.

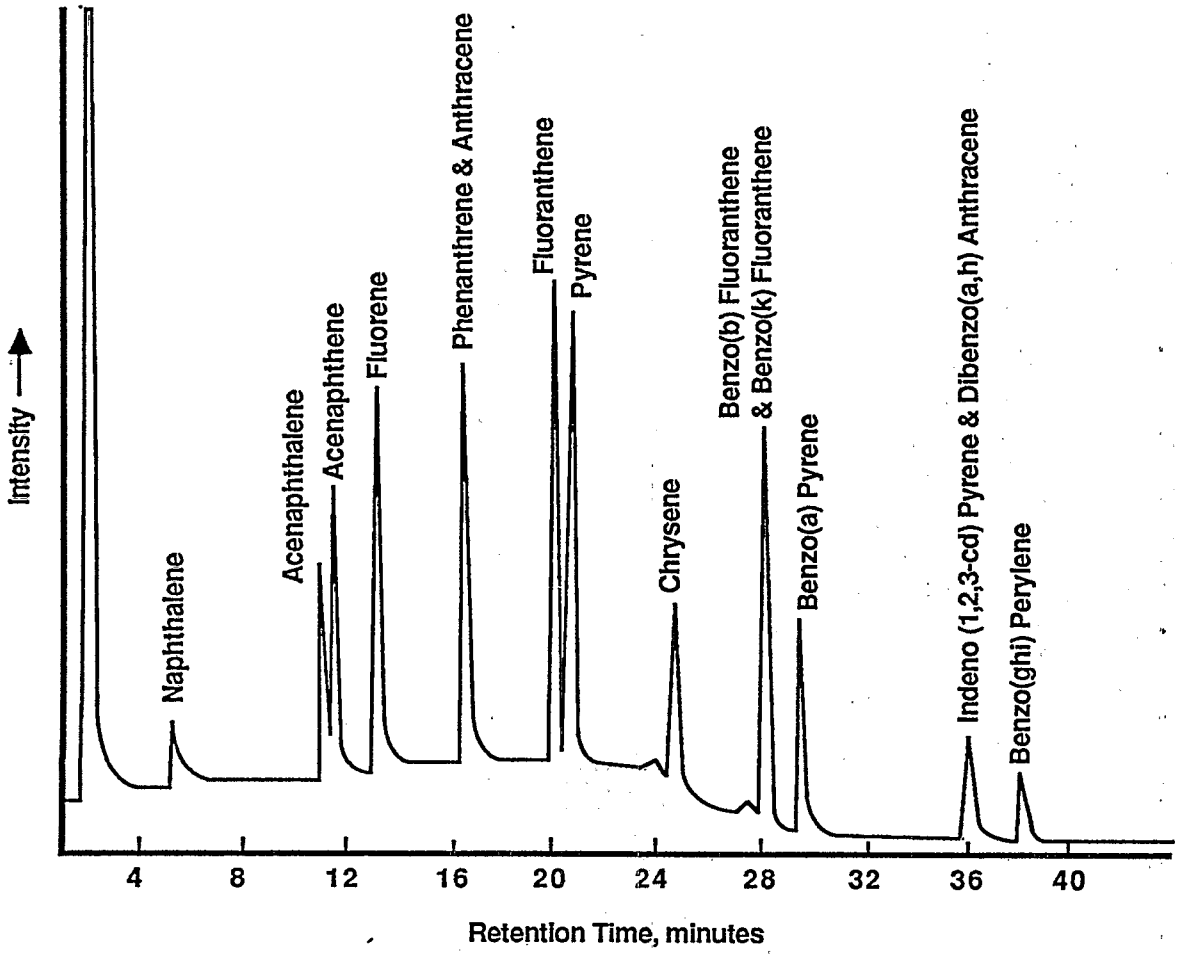

Column: 3% OV-17 on Chromosorb W-AW-DCMS
Program: 100 °C. 4 min., 8 ° per min. to 280 °C.
Detector: Flame Ionization

FIGURE 14.0 TYPICAL CHROMATOGRAM OF SELECTIVE PNAs BY GC EQUIPPED WITH FI DETECTOR.

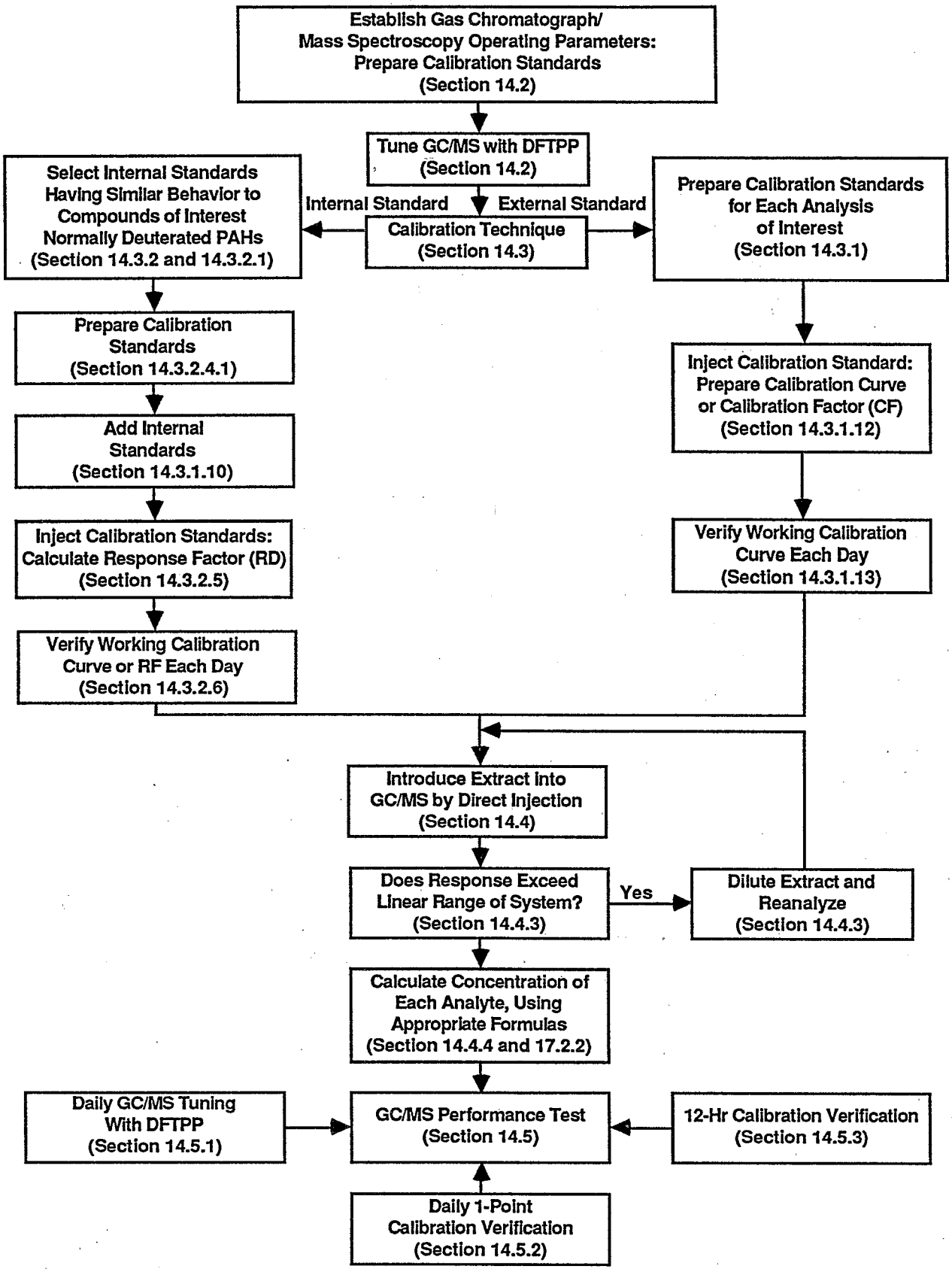

FIGURE 15.0 GC/MS CALIBRATION AND ANALYSIS.

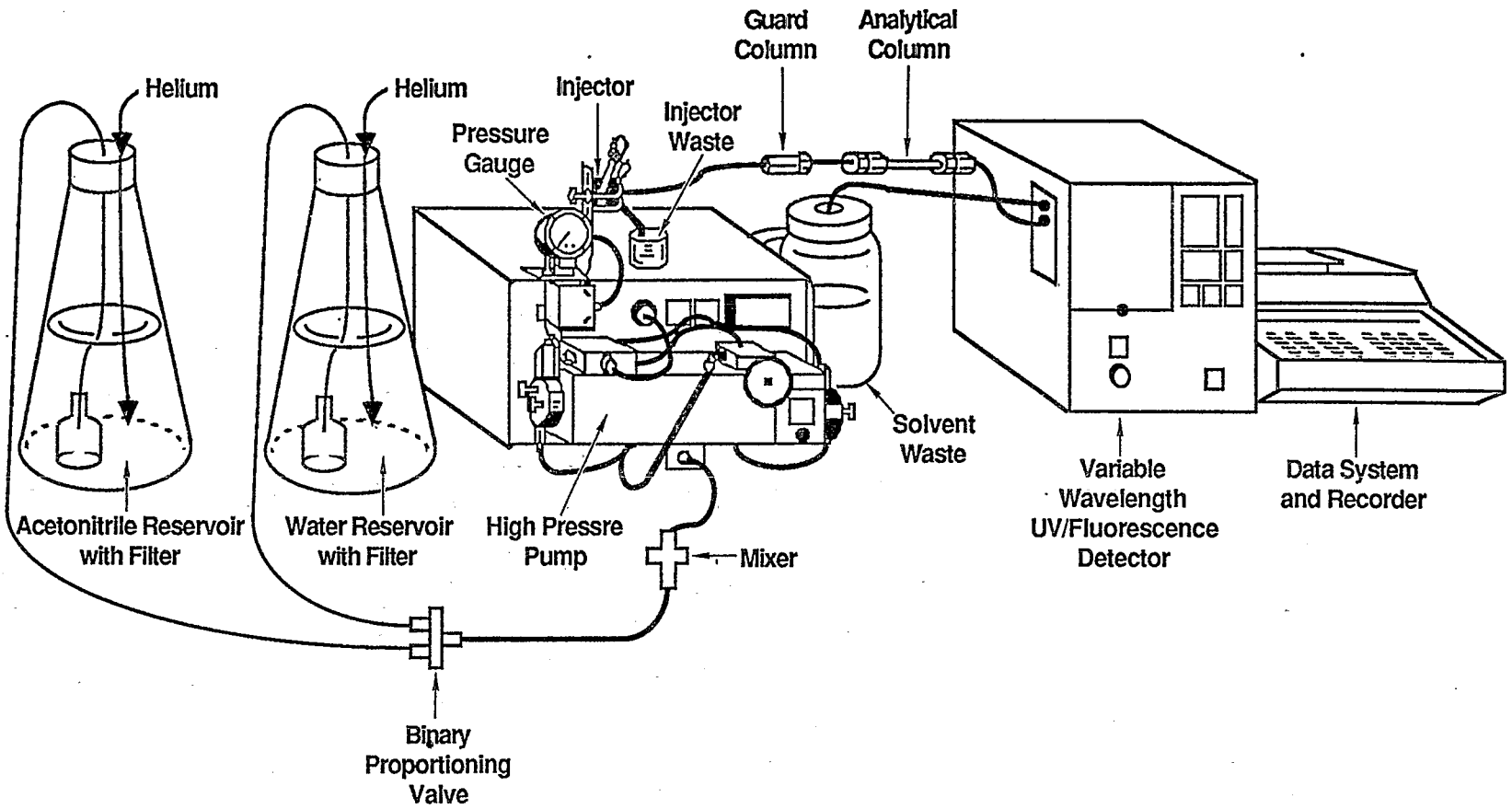

FIGURE 16. IMPORTANT COMPONENTS OF AN HPLC SYSTEM.

T013-96

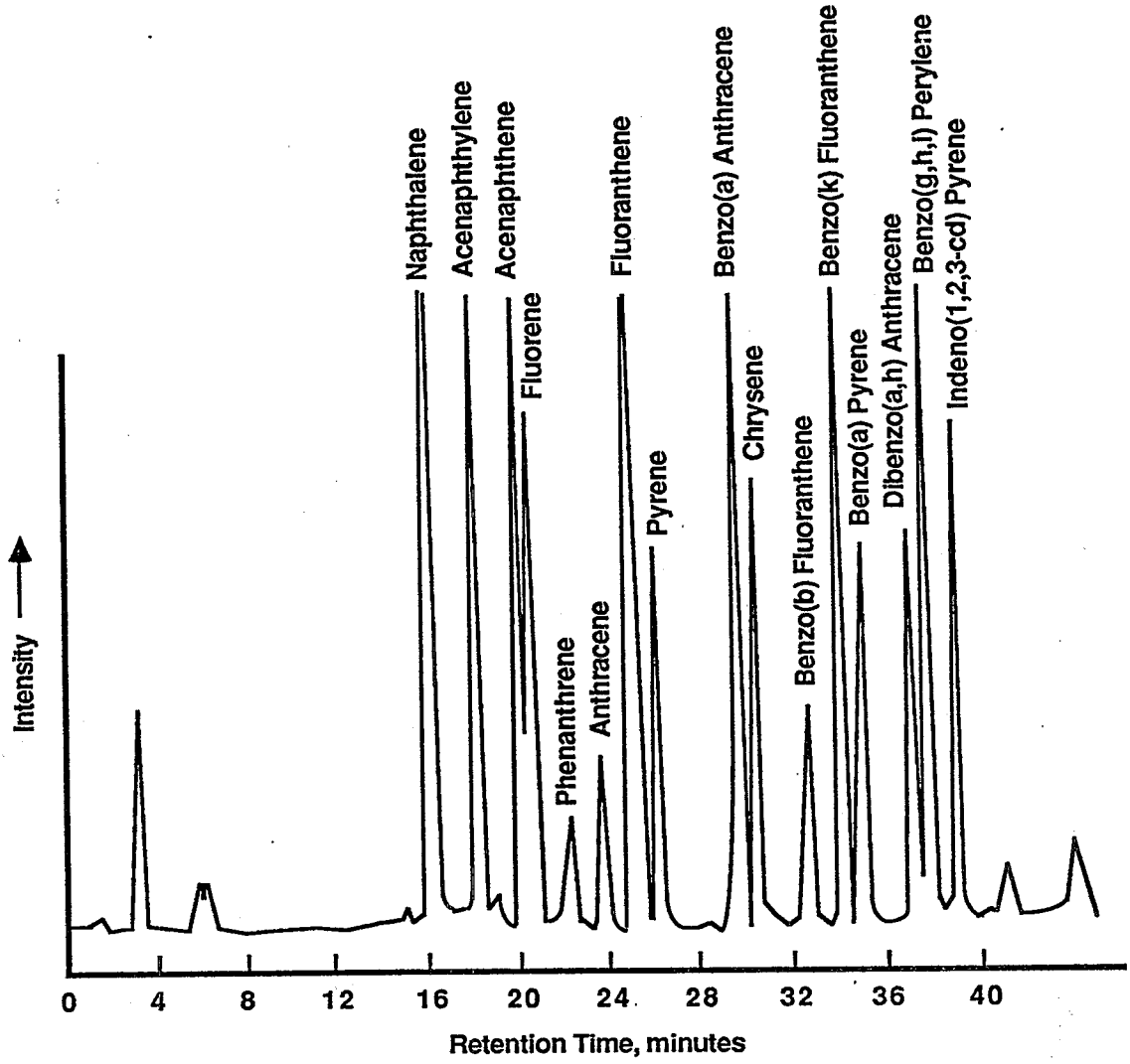

FIGURE 17.0 TYPICAL CHROMATOGRAM OF SELECTIVE PAHs ASSOCIATES WITH HPLC ANALYSIS WITH FLUORESCENCE DETECTION.

Revision 1.0
June, 1988

METHOD TO14

DETERMINATION OF VOLATILE ORGANIC COMPOUNDS (VOCs) IN AMBIENT AIR USING SUMMA® PASSIVATED CANISTER SAMPLING AND GAS CHROMATOGRAPHIC ANALYSIS

OUTLINE

1. Scope
2. Applicable Documents
3. Summary of Method
4. Significance
5. Definitions
6. Interferences and Limitations
7. Apparatus
   - 7.1 Sample Collection
     - 7.1.1 Subatmospheric Pressure
     - 7.1.2 Pressurized
   - 7.2 Sample Analysis
     - 7.2.1 GC-MS-SCAN Analytical System
     - 7.2.2 GC-MS-SIM Analytical System
     - 7.2.3 GC-Multidetector Analytical System
   - 7.3 Canister Cleaning System
   - 7.4 Calibration System and Manifold
8. Reagents and Materials
9. Sampling System
   - 9.1 System Description
     - 9.1.1 Subatmospheric Pressure Sampling
     - 9.1.2 Pressurized Sampling
     - 9.1.3 All Samplers
   - 9.2 Sampling Procedure
10. Analytical System
   - 10.1 System Description
     - 10.1.1 GC-MS-SCAN System
     - 10.1.2 GC-MS-SIM System
     - 10.1.3 GC-Multidetector (GC-FID-ECD-PID) System
   - 10.2 GC-MS-SCAN-SIM System Performance Criteria
     - 10.2.1 GC-MS System Operation
     - 10.2.2 Daily GC-MS Tuning
     - 10.2.3 GC-MS Calibration
       - 10.2.3.1 Initial Calibration
       - 10.2.3.2 Routine Calibration
   - 10.3 GC-FID-ECD System Performance Criteria (With Optional PID)
     - 10.3.1 Humid Zero Air Certification
     - 10.3.2 GC Retention Time Windows Determination
     - 10.3.3 GC Calibration
       - 10.3.3.1 Initial Calibration
       - 10.3.3.2 Routine Calibration
     - 10.3.4 GC-FID-ECD-PID System Performance Criteria
   - 10.4 Analytical Procedures
     - 10.4.1 Canister Receipt
     - 10.4.2 GC-MS-SCAN Analysis (With Optional FID System)
     - 10.4.3 GC-MS-SIM Analysis (With Optional FID System)
     - 10.4.4 GC-FID-ECD Analysis (With Optional PID System)

OUTLINE (Cont.)

11. Cleaning and Certification Program
    11.1 Canister Cleaning and Certification
    11.2 Sampling System Cleaning and Certification
        11.2.1 Cleaning Sampling System Components
        11.2.2 Humid Zero Air Certification
        11.2.3 Sampler System Certification With Humid Calibration Gas Standards

12. Performance Criteria and Quality Assurance
    12.1 Standard Operating Procedures (SOPs)
    12.2 Method Relative Accuracy and Linearity
    12.3 Method Modification
        12.3.1 Sampling
        12.3.2 Analysis
    12.4 Method Safety
    12.5 Quality Assurance
        12.5.1 Sampling System
        12.5.2 GC-MS-SCAN-SIM System Performance Criteria
        12.5.3 GC-Multidetector System Performance Criteria

13. Acknowledgements

14. References

APPENDIX A - Availability of Audit Cylinders from U.S. Environmental Protection Agency (USEPA) to USEPA Program/Regional Offices, State/Local Agencies and Their Contractors

APPENDIX B - Operating Procedures for a Portable Gas Chromatograph Equipped With a Photoionization Detector

APPENDIX C - Installation and Operating Procedures for Alternative Air Toxics Samplers

METHOD TO14

DETERMINATION OF VOLATILE ORGANIC COMPOUNDS (VOCs) IN AMBIENT AIR USING SUMMA® PASSIVATED CANISTER SAMPLING AND GAS CHROMATOGRAPHIC ANALYSIS

1. Scope

1.1 This document describes a procedure for sampling and analysis of volatile organic compounds (VOCs) in ambient air. The method is based on collection of whole air samples in SUMMA® passivated stainless steel canisters. The VOCs are subsequently separated by gas chromatography and measured by mass-selective detector or multidetector techniques. This method presents procedures for sampling into canisters to final pressures both above and below atmospheric pressure (respectively referred to as pressurized and subatmospheric pressure sampling).

1.2 This method is applicable to specific VOCs that have been tested and determined to be stable when stored in pressurized and subatmospheric pressure canisters. Numerous compounds, many of which are chlorinated VOCs, have been successfully tested for storage stability in pressurized canisters (1,2). However, minimal documentation is currently available demonstrating stability of VOCs in subatmospheric pressure canisters.

1.3 The organic compounds that have been successfully collected in pressurized canisters by this method are listed in Table 1. These compounds have been successfully measured at the parts per billion by volume (ppbv) level.

2. Applicable Documents

2.1 ASTM Standards

D1356 - Definition of Terms Related to Atmospheric Sampling and Analysis
E260 - Recommended Practice for General Gas Chromatography Procedures
E355 - Practice for Gas Chromatography Terms and Relationships

2.2 Other Documents

U.S. Environmental Protection Agency Technical Assistance Document (3)
Laboratory and Ambient Air Studies (4-17)

3. Summary of Method

3.1 Both subatmospheric pressure and pressurized sampling modes use an initially evacuated canister and a pump-ventilated sample line during sample collection. Pressurized sampling requires an additional pump to provide positive pressure to the sample canister. A sample of ambient air is drawn through a sampling train comprised of components that regulate the rate and duration of sampling into a pre-evacuated SUMMA® passivated canister.

3.2 After the air sample is collected, the canister valve is closed, an identification tag is attached to the canister, and the canister is transported to a predetermined laboratory for analysis.

3.3 Upon receipt at the laboratory, the canister tag data is recorded and the canister is attached to the analytical system. During analysis, water vapor is reduced in the gas stream by a Nafion® dryer (if applicable), and the VOCs are then concentrated by collection in a cryogenically-cooled trap. The cryogen is then removed and the temperature of the trap is raised. The VOCs originally collected in the trap are revolatilized, separated on a GC column, then detected by one or more detectors for identification and quantitation.

3.4 The analytical strategy for Method TO14 involves using a high-resolution gas chromatograph (GC) coupled to one or more appropriate GC detectors. Historically, detectors for a GC have been divided into two groups: non-specific detectors and specific detectors. The non-specific detectors include, but are not limited to, the nitrogen-phosphorus detector (NPD), the flame ionization detector (FID), the electron capture detector (ECD) and the photoionization detector (PID). The specific detectors include the mass spectrometer (MS) operating in either the selected ion monitoring (SIM) mode or the SCAN mode, or the ion trap detector. The use of these detectors or a combination of these detectors as part of an analytical scheme is determined by the required specificity and sensitivity of the application. While the non-specific detectors are less expensive per analysis and in some cases more sensitive than the specific detector, they vary in specificity and sensitivity for a specific class of compounds. For instance, if multiple halogenated compounds are targeted,

an ECD is usually chosen; if only compounds containing nitrogen or phosphorus are of interest, a NPD can be used; or, if a variety of hydrocarbon compounds are sought, the broad response of the FID or PID is appropriate. In each of these cases, however, the specific identification of the compound within the class is determined only by its retention time, which can be subject to shifts or to interference from other nontargeted compounds. When misidentification occurs, the error is generally a result of a cluttered chromatogram, making peak assignment difficult. In particular, the more volatile organics (chloroethanes, ethyltoluenes, dichlorobenzenes, and various freons) exhibit less well defined chromatographic peaks, leading to misidentification using non-specific detectors. Quantitative comparisons indicate that the FID is more subject to error than the ECD because the ECD is a much more selective detector for a smaller class of compounds which exhibits a stronger response. Identification errors, however, can be reduced by: (a) employing simultaneous detection by different detectors or (b) correlating retention times from different GC columns for confirmation. In either case, interferences on the non-specific detectors can still cause error in identifying a complex sample. The non-specific detector system (GC-NPD-FID-ECD-PID), however, has been used for approximate quantitation of relatively clean samples. The nonspecific detector system can provide a "snapshot" of the constituents in the sample, allowing determination of:

- Extent of misidentification due to overlapping peaks,
- Position of the VOCs within or not within the concentration range of anticipated further analysis by specific detectors (GC-MS-SCAN-SIM) (if not, the sample is further diluted), and
- Existence of unexpected peaks which need further identification by specific detectors.

On the other hand, the use of specific detectors (MS coupled to a GC) allows positive compound identification, thus lending itself to more specificity than the multidetector GC. Operating in the SIM mode, the MS can readily approach the same sensitivity as the

combination of retention time and multiple general detector verification to identify compounds. However, interference due to nearly identical retention times can affect system quantitation when using this option.

Due to the low concentrations of VOCs encountered in urban air (typically less than 4 ppbv and the majority below 1 ppbv) along with their complicated chromatograms, Method TO-14 strongly recommends the specific detectors (GC-MS-SCAN-SIM) for positive identification and for primary quantitation to ensure that high-quality ambient data is acquired.

For the experienced analyst whose analytical system is limited to the non-specific detectors, Section 10.3 does provide guidelines and example chromatograms showing typical retention times and calibration response factors, and utilizing the non-specific detectors (GC-FID-ECD-PID) analytical system as the primary quantitative technique.

4. Significance

4.1 VOCs enter the atmosphere from a variety of sources, including petroleum refineries, synthetic organic chemical plants, natural gas processing plants, and automobile exhaust. Many of these VOCs are acutely toxic; therefore, their determination in ambient air is necessary to assess human health impacts.

4.2 Conventional methods for VOC determination use solid sorbent sampling techniques. The most widely used solid sorbent is Tenax®. An air sample is drawn through a Tenax®-filled cartridge where certain VOCs are trapped on the polymer. The sample cartridge is transferred to a laboratory and analyzed by GC-MS.

4.3 VOCs can also be successfully collected in stainless steel canisters. Collection of ambient air samples in canisters provides (1) convenient integration of ambient samples over a specific time period, (e.g., 24 hours); (2) remote sampling and central analysis; (3) ease of storing and shipping samples; (4) unattended sample collection; (5) analysis of samples from multiple sites with one analytical system; and (6) collection of sufficient sample volume to allow assessment of measurement precision and/or analysis of

samples by several analytical systems. However, care must be exercised in selecting, cleaning, and handling sample canisters and sampling apparatus to avoid losses or contamination of the samples. Contamination is a critical issue with canister-based sampling because the canister is the last element in the sampling train.

4.4 Interior surfaces of the canisters are treated by the SUMMA® passivation process, in which a pure chrome-nickel oxide is formed on the surface. This type of vessel has been used in the past for sample collection and has demonstrated sample storage stability of many specific organic compounds.

4.5 This method can be applied to sampling and analysis of not only VOCs, but also some selected semivolatile organic compounds (SVOCs). The term "semivolatile organic compounds" is used to broadly describe organic compounds that are too volatile to be collected by filtration air sampling but not volatile enough for thermal desorption from solid sorbents. SVOCs can generally be classified as those with saturation vapor pressures at 25°C between 10^{-1} and 10^{-7} mm Hg. VOCs are generally classified as those organics having saturated vapor pressures at 25°C greater than 10^{-1} mm Hg.

5. Definitions

Note: Definitions used in this document and in any user-prepared Standard Operating Procedures (SOPs) should be consistent with ASTM Methods D1356, E260, and E355. All abbreviations and symbols within this method are defined at point of use.

5.1 Absolute canister pressure = Pg+Pa, where Pg = gauge pressure in the canister (kPa, psi) and Pa = barometric pressure (see 5.2).

5.2 Absolute pressure - Pressure measured with reference to absolute zero pressure (as opposed to atmospheric pressure), usually expressed as kPa, mm Hg or psia.

5.3 Cryogen - A refrigerant used to obtain very low temperatures in the cryogenic trap of the analytical system. A typical cryogen is liquid oxygen (bp -183.0°C) or liquid argon (bp -185.7°C).

5.4 Dynamic calibration - Calibration of an analytical system using calibration gas standard concentrations in a form identical or very similar to the samples to be analyzed and by introducing such standards into the inlet of the sampling or analytical system in a manner very similar to the normal sampling or analytical process.

5.5 Gauge pressure - Pressure measured above ambient atmospheric pressure (as opposed to absolute pressure). Zero gauge pressure is equal to ambient atmospheric (barometric) pressure.

5.6 MS-SCAN - The GC is coupled to a MS programmed in the SCAN mode to scan all ions repeatedly during the GC run. As used in the current context, this procedure serves as a qualitative identification and characterization of the sample.

5.7 MS-SIM - The GC is coupled to a MS programmed to acquire data for only specified ions and to disregard all others. This is performed using SIM coupled to retention time discriminators. The GC-SIM analysis provides quantitative results for selected constituents of the sample gas as programmed by the user.

5.8 Megabore® column - Chromatographic column having an internal diameter (I.D.) greater than 0.50 mm. The Megabore® column is a trademark of the J&W Scientific Co. For purposes of this method, Megabore® refers to chromatographic columns with 0.53 mm I.D.

5.9 Pressurized sampling - Collection of an air sample in a canister with a (final) canister pressure above atmospheric pressure, using a sample pump.

5.10 Qualitative accuracy - The ability of an analytical system to correctly identify compounds.

5.11 Quantitative accuracy - The ability of an analytical system to correctly measure the concentration of an identified compound.

5.12 Static calibration - Calibration of an analytical system using standards in a form different than the samples to be analyzed. An example of a static calibration would be injecting a small volume of a high concentration standard directly onto a GC column, bypassing the sample extraction and preconcentration portion of the analytical system.

5.13 Subatmospheric sampling - Collection of an air sample in an evacuated canister at a (final) canister pressure below atmospheric pressure, without the assistance of a sampling pump. The canister is filled as the internal canister pressure increases to ambient or near ambient pressure. An auxiliary vacuum pump may be used as part of the sampling system to flush the inlet tubing prior to or during sample collection.

6. Interferences and Limitations

6.1 Interferences can occur in sample analysis if moisture accumulates in the dryer (see Section 10.1.1.2). An automated cleanup procedure that periodically heats the dryer to about 100°C while purging with zero air eliminates any moisture buildup. This procedure does not degrade sample integrity.

6.2 Contamination may occur in the sampling system if canisters are not properly cleaned before use. Additionally, all other sampling equipment (e.g., pump and flow controllers) should be thoroughly cleaned to ensure that the filling apparatus will not contaminate samples. Instructions for cleaning the canisters and certifying the field sampling system are described in Sections 12.1 and 12.2, respectively.

6.3 Because the GC-MS analytical system employs a Nafion® permeable membrane dryer to remove water vapor selectively from the sample stream, polar organic compounds may permeate concurrent with the moisture molecule. Consequently, the analyst should quantitate his or her system with the specific organic constituents under examination.

7. Apparatus

7.1 Sample Collection

[Note: Subatmospheric pressure and pressurized canister sampling systems are commercially available and have been used as part of U.S. Environmental Protection Agency's Toxics Air Monitoring Stations (TAMS), Urban Air Toxic Pollutant Program (UATP), and the non-methane organic compound (NMOC) sampling and analysis program.]

7.1.1 Subatmospheric Pressure (See Figure 2 Without Metal Bellows Type Pump)

7.1.1.1 Sampling inlet line - stainless steel tubing to connect the sampler to the sample inlet.

7.1.1.2 Sample canister - leak-free stainless steel pressure vessels of desired volume (e.g., 6 L), with valve and SUMMA® passivated interior surfaces (Scientific Instrumentation Specialists, Inc., P.O. Box 8941, Moscow, ID 83843, or Anderson Samplers, Inc., 4215-C Wendell Dr., Atlanta, GA, 30336, or equivalent).

7.1.1.3 Stainless steel vacuum/pressure gauge - capable of measuring vacuum (-100 to 0 kPa or 0 to 30 in Hg) and pressure (0-206 kPa or 0-30 psig) in the sampling system (Matheson, P.O. Box 136, Morrow, GA 30200, Model 63-3704, or equivalent). Gauges should be tested clean and leak tight.

7.1.1.4 Electronic mass flow controller - capable of maintaining a constant flow rate (± 10%) over a sampling period of up to 24 hours and under conditions of changing temperature (20-40°C) and humidity (Tylan Corp., 19220 S. Normandie Ave., Torrance, CA 90502, Model FC-260, or equivalent).

7.1.1.5 Particulate matter filter - 2-um sintered stainless steel in-line filter (Nupro Co., 4800 E. 345th St., Willoughby, OH 44094, Model SS-2F-K4-2, or equivalent).

7.1.1.6 Electronic timer - for unattended sample collection (Paragon Elect. Co., 606 Parkway Blvd., P.O. Box 28, Twin Rivers, WI 54201, Model 7008-00, or equivalent).

7.1.1.7 Solenoid valve - electrically-operated, bi-stable solenoid valve (Skinner Magnelatch Valve, New Britain, CT, Model V5RAM49710, or equivalent) with Viton® seat and o-rings.

7.1.1.8 Chromatographic grade stainless steel tubing and fittings - for interconnections (Alltech Associates, 2051 Waukegan Rd., Deerfield, IL 60015, Cat. #8125,

or equivalent). All such materials in contact with sample, analyte, and support gases prior to analysis should be chromatographic grade stainless steel.

7.1.1.9 Thermostatically controlled heater - to maintain temperature inside insulated sampler enclosure above ambient temperature (Watlow Co., Pfafftown, NC, Part 04010080, or equivalent).

7.1.1.10 Heater thermostat - automatically regulates heater temperature (Elmwood Sensors, Inc., 500 Narragansett Park Dr., Pawtucket RI 02861, Model 3455-RC-0100-0222, or equivalent).

7.1.1.11 Fan - for cooling sampling system (EG&G Rotron, Woodstock, NY, Model SUZAI, or equivalent).

7.1.1.12 Fan thermostat - automatically regulates fan operation (Elmwood Sensors, Inc., Pawtucket, RI, Model 3455-RC-0100-0244, or equivalent).

7.1.1.13 Maximum-minimum thermometer - records highest and lowest temperatures during sampling period (Thomas Scientific, Brooklyn Thermometer Co., Inc., P/N 9327H30, or equivalent).

7.1.1.14 Nupro stainless steel shut-off valve - leak free, for vacuum/pressure gauge.

7.1.1.15 Auxiliary vacuum pump - continuously draws ambient air to be sampled through the inlet manifold at 10 L/min. or higher flow rate. Sample is extracted from the manifold at a lower rate, and excess air is exhausted. [Note: The use of higher inlet flow rates dilutes any contamination present in the inlet and reduces the possibility of sample contamination as a result of contact with active adsorption sites on inlet walls.]

7.1.1.16 Elapsed time meter - measures duration of sampling (Conrac, Cramer Div., Old Saybrook, CT, Type 6364, P/N 10082, or equivalent).

7.1.1.17 Optional fixed orifice, capillary, or adjustable micrometering valve - may be used in lieu of the electronic flow controller for grab samples or short duration time-integrated samples. Usually appropriate only in situations where screening samples are taken to assess future sampling activity.

7.1.2 Pressurized (Figure 2 With Metal Bellows Type Pump and Figure 3)

7.1.2.1 Sample pump - stainless steel, metal bellows type (Metal Bellows Corp., 1075 Providence Highway, Sharon, MA 02067, Model MB-151, or equivalent), capable of 2 atmospheres output pressure. Pump must be free of leaks, clean, and uncontaminated by oil or organic compounds. [Note: An alternative sampling system has been developed by Dr. R. Rasmussen, The Oregon Graduate Center (18,19) and is illustrated in Figure 3. This flow system uses, in order, a pump, a mechanical flow regulator, and a mechanical compensating flow restrictive device. In this configuration the pump is purged with a large sample flow, thereby eliminating the need for an auxiliary vacuum pump to flush the sample inlet. Interferences using this configuration have been minimal.]

7.1.2.2 Other supporting materials - all other components of the pressurized sampling system (Figure 2 with metal bellows type pump and Figure 3) are similar to components discussed in Sections 7.1.1.1 through 7.1.1.16.

7.2 Sample Analysis

7.2.1 GC-MS-SCAN Analytical System (See Figure 4)

7.2.1.1 The GC-MS-SCAN analytical system must be capable of acquiring and processing data in the MS-SCAN mode.

7.2.1.2 Gas chromatograph - capable of sub-ambient temperature programming for the oven, with other generally standard features such as gas flow regulators, automatic control of valves and integrator, etc. Flame ionization detector optional. (Hewlett Packard, Rt. 41, Avondale, PA 19311, Model 5880A, with oven temperature control and Level 4 BASIC programming, or equivalent.)

7.2.1.3 Chromatographic detector - mass-selective detector (Hewlett Packard, 3000-T Hanover St., 9B, Palo Alto, CA 94304, Model HP-5970 MS, or equivalent), equipped with computer and appropriate software (Hewlett Packard, 3000-T Hanover St., 9B, Palo Alto, CA 94304,

HP-216 Computer, Quicksilver MS software, Pascal 3.0, mass storage 9133 HP Winchester with 3.5 inch floppy disk, or equivalent). The GC-MS is set in the SCAN mode, where the MS screens the sample for identification and quantitation of VOC species.

7.2.1.4 Cryogenic trap with temperature control assembly - refer to Section 10.1.1.3 for complete description of trap and temperature control assembly (Nutech Corporation, 2142 Geer St., Durham, NC, 27704, Model 320-01, or equivalent).

7.2.1.5 Electronic mass flow controllers (3) - maintain constant flow (for carrier gas and sample gas) and to provide analog output to monitor flow anomalies (Tylan Model 260, 0-100 cm^3/min, or equivalent).

7.2.1.6 Vacuum pump - general purpose laboratory pump, capable of drawing the desired sample volume through the cryogenic trap (Thomas Industries, Inc., Sheboygan, WI, Model 107BA20, or equivalent).

7.2.1.7 Chromatographic grade stainless steel tubing and stainless steel plumbing fittings - refer to Section 7.1.1.8 for description.

7.2.1.8 Chromatographic column - to provide compound separation such as shown in Table 5 (Hewlett Packard, Rt. 41, Avondale, PA 19311, OV-1 capillary column, 0.32 mm x 50 m with 0.88 um crosslinked methyl silicone coating, or equivalent).

7.2.1.9 Stainless steel vacuum/pressure gauge (optional) - capable of measuring vacuum (-101.3 to 0 kPa) and pressure (0-206 kPa) in the sampling system (Matheson, P.O. Box 136, Morrow, GA 30200, Model 63-3704, or equivalent). Gauges should be tested clean and leak tight.

7.2.1.10 Stainless steel cylinder pressure regulators - standard, two-stage cylinder regulators with pressure gauges for helium, zero air and hydrogen gas cylinders.

7.2.1.11 Gas purifiers (3) - used to remove organic impurities and moisture from gas streams (Hewlett Packard, Rt. 41, Avondale, PA, 19311, P/N 19362 - 60500, or equivalent).

7.2.1.12 Low dead-volume tee (optional) - used to split the exit flow from the GC column (Alltech Associates, 2051 Waukegan Rd., Deerfield, IL 60015, Cat. #5839, or equivalent).

7.2.1.13 Nafion® dryer - consisting of Nafion tubing co-axially mounted within larger tubing (Perma Pure Products, 8 Executive Drive, Toms River, NJ, 08753, Model MD-125-48, or equivalent). Refer to Section 10.1.1.2 for description.

7.2.1.14 Six-port gas chromatographic valve - (Seismograph Service Corp, Tulsa, OK, Seiscor Model VIII, or equivalent).

7.2.1.15 Chart recorder (optional) - compatible with the detector output signals to record optional FID detector response to the sample.

7.2.1.16 Electronic integrator (optional) - compatible with the detector output signal of the FID and capable of integrating the area of one or more response peaks and calculating peak areas corrected for baseline drift.

7.2.2 GC-MS-SIM Analytical System (See Figure 4)

7.2.2.1 The GC-MS-SIM analytical system must be capable of acquiring and processing data in the MS-SIM mode.

7.2.2.2 All components of the GC-MS-SIM system are identical to Sections 7.2.1.2 through 7.2.1.16.

7.2.3 GC-Multidetector Analytical System (See Figure 5 and Figure 6)

7.2.3.1 Gas chromatograph with flame ionization and electron capture detectors (photoionization detector optional) - capable of sub-ambient temperature programming for the oven and simultaneous operation of all detectors, and with other generally standard features such as gas flow regulators, automatic control of valves and integrator, etc. (Hewlett Packard, Rt. 41, Avondale, PA 19311, Model 5880A, with oven temperature control and Level 4 BASIC programming, or equivalent).

7.2.3.2 Chart recorders - compatible with the detector output signals to record detector response to the sample.

7.2.3.3 Electronic integrator - compatible with the detector output signals and capable of integrating the area of one or more response peaks and calculating peak areas corrected for baseline drift.

7.2.3.4 Six-port gas chromatographic valve - (Seismograph Service Corp, Tulsa, OK, Seiscor Model VIII, or equivalent).

7.2.3.5 Cryogenic trap with temperature control assembly - refer to Section 10.1.1.3 for complete description of trap and temperature control assembly (Nutech Corporation, 2142 Geer St., Durham, NC 27704, Model 320-01, or equivalent).

7.2.3.6 Electronic mass flow controllers (3) - maintain constant flow (for carrier gas, nitrogen make-up gas and sample gas) and to provide analog output to monitor flow anomalies (Tylan Model 260, 0-100 cm^3/min, or equivalent).

7.2.3.7 Vacuum pump - general purpose laboratory pump, capable of drawing the desired sample volume through the cryogenic trap (see 7.2.1.6 for source and description).

7.2.3.8 Chromatographic grade stainless steel tubing and stainless steel plumbing fittings - refer to Section 7.1.1.8 for description.

7.2.3.9 Chromatographic column - to provide compound separation such as shown in Table 7. (Hewlett Packard, Rt. 41, Avondale, PA 19311, OV-1 capillary column, 0.32 mm x 50 m with 0.88 um crosslinked methyl silicone coating, or equivalent). [Note: Other columns (e.g., DB-624) can be used as long as the system meets user needs. The wider Megabore® column (i.e., 0.53 mm I.D.) is less susceptible to plugging as a result of trapped water, thus eliminating the need for a Nafion® dryer in the analytical system. The Megabore® column has sample capacity approaching that of a packed column, while retaining much of the peak resolution traits of narrower columns (i.e., 0.32 mm I.D.).

7.2.3.10 Vacuum/pressure gauges (3) - refer to Section 7.2.1.9 for description.

7.2.3.11 Cylinder pressure stainless steel regulators - standard, two-stage cylinder regulators with pressure gauges for helium, zero air, nitrogen, and hydrogen gas cylinders.

7.2.3.12 Gas purifiers (4) - used to remove organic impurities and moisture from gas streams (Hewlett-Packard, Rt. 41, Avondale, PA, 19311, P/N 19362 - 60500, or equivalent).

7.2.3.13 Low dead-volume tee - used to split (50/50) the exit flow from the GC column (Alltech Associates, 2051 Waukegan Rd., Deerfield, IL 60015, Cat. #5839, or equivalent).

7.3 Canister Cleaning System (See Figure 7)

7.3.1 Vacuum pump - capable of evacuating sample canister(s) to an absolute pressure of <0.05 mm Hg.

7.3.2 Manifold - stainless steel manifold with connections for simultaneously cleaning several canisters.

7.3.3 Shut-off valve(s) - seven (7) on-off toggle valves.

7.3.4 Stainless steel vacuum gauge - capable of measuring vacuum in the manifold to an absolute pressure of 0.05 mm Hg or less.

7.3.5 Cryogenic trap (2 required) - stainless steel U-shaped open tubular trap cooled with liquid oxygen or argon to prevent contamination from back diffusion of oil from vacuum pump and to provide clean, zero air to sample canister(s).

7.3.6 Stainless steel pressure gauges (2) - 0-345 kPa (0-50 psig) to monitor zero air pressure.

7.3.7 Stainless steel flow control valve - to regulate flow of zero air into canister(s).

7.3.8 Humidifier - pressurizable water bubbler containing high performance liquid chromatography (HPLC) grade deionized water or other system capable of providing moisture to the zero air supply.

7.3.9 Isothermal oven (optional) for heating canisters (Fisher Scientific, Pittsburgh, PA, Model 349, or equivalent).

7.4 Calibration System and Manifold (See Figure 8)

7.4.1 Calibration manifold - glass manifold, (1.25 cm I.D. x 66 cm) with sampling ports and internal baffles for flow disturbance to ensure proper mixing.

7.4.2 Humidifier - 500-mL impinger flask containing HPLC grade deionized water.

7.4.3 Electronic mass flow controllers - one 0 to 5 L/min and one 0 to 50 cm^3/min (Tylan Corporation, 23301-TS Wilmington Ave., Carson, CA, 90745, Model 2160, or equivalent).

7.4.4 Teflon® filter(s) - 47-mm Teflon® filter for particulate control, best source.

8. Reagents and Materials

8.1 Gas cylinders of helium, hydrogen, nitrogen, and zero air - ultrahigh purity grade, best source.

8.2 Gas calibration standards - cylinder(s) containing approximately 10 ppmv of each of the following compounds of interest:

vinyl chloride
vinylidene chloride
1,1,2-trichloro-1,2,2-trifluoroethane
chloroform
1,2-dichloroethane
benzene
toluene
Freon 12
methyl chloride
1,2-dichloro-1,1,2,2-tetrafluoroethane
methyl bromide
ethyl chloride
Freon 11
dichloromethane
1,1-dichloroethane
cis-1,2-dichloroethylene
1,2-dichloropropane
1,1,2-trichloroethane
1,2-dibromoethane
tetrachloroethylene
chlorobenzene
benzyl chloride
hexachloro-1,3-butadiene
methyl chloroform
carbon tetrachloride
trichloroethylene
cis-1,3-dichloropropene
trans-1,3-dichloropropene
ethylbenzene
o-xylene
m-xylene
p-xylene
styrene
1,1,2,2-tetrachloroethane
1,3,5-trimethylbenzene
1,2,4-trimethylbenzene
m-dichlorobenzene
o-dichlorobenzene
p-dichlorobenzene
1,2,4-trichlorobenzene

The cylinder(s) should be traceable to a National Bureau of Standards (NBS) Standard Reference Material (SRM) or to a NBS/EPA approved Certified Reference Material (CRM). The components may be purchased in one cylinder or may be separated into different cylinders. Refer to manufacturer's specification for guidance on purchasing and mixing VOCs in gas cylinders. Those compounds purchased should match one's own target list.

8.3 Cryogen - liquid oxygen (bp -183.0°C), or liquid argon (bp -185.7°C), best source.

8.4 Gas purifiers - connected in-line between hydrogen, nitrogen, and zero air gas cylinders and system inlet line, to remove moisture and organic impurities from gas streams (Alltech Associates, 2051 Waukegan Road, Deerfield, IL, 60015, or equivalent).

8.5 Deionized water - high performance liquid chromatography (HPLC) grade, ultrahigh purity (for humidifier), best source.

8.6 4-bromofluorobenzene - used for tuning GC-MS, best source.

8.7 Hexane - for cleaning sampling system components, reagent grade, best source.

8.8 Methanol - for cleaning sampling system components, reagent grade, best source.

9. Sampling System

9.1 System Description

9.1.1 Subatmospheric Pressure Sampling [See Figure 2 (Without Metal Bellows Type Pump)]

9.1.1.1 In preparation for subatmospheric sample collection in a canister, the canister is evacuated to 0.05 mm Hg. When opened to the atmosphere containing the VOCs to be sampled, the differential pressure causes the sample to flow into the canister. This technique may be used to collect grab samples (duration of 10 to 30 seconds) or time-integrated samples (duration of 12 to 24 hours) taken through a flow-restrictive inlet (e.g., mass flow controller, critical orifice).

9.1.1.2 With a critical orifice flow restrictor, there will be a decrease in the flow rate as the pressure approaches atmospheric. However, with a mass flow controller, the subatmospheric sampling system can maintain a constant flow rate from full vacuum to within about 7 kPa (1.0 psi) or less below ambient pressure.

9.1.2 Pressurized Sampling [See Figure 2 (With Metal Bellows Type Pump)]

9.1.2.1 Pressurized sampling is used when longer-term integrated samples or higher volume samples are required. The sample is collected in a canister using a pump and flow control arrangement to achieve a typical 103-206 kPa (15-30 psig) final canister pressure. For example, a 6-liter evacuated canister can be filled at 10 cm^3/min for 24 hours to achieve a final pressure of about 144 kPa (21 psig).

9.1.2.2 In pressurized canister sampling, a metal bellows type pump draws in ambient air from the sampling manifold to fill and pressurize the sample canister.

9.1.3 All Samplers

9.1.3.1 A flow control device is chosen to maintain a constant flow into the canister over the desired sample period. This flow rate is determined so the canister is filled (to about 88.1 kPa for subatmospheric pressure sampling or to about one atmosphere above ambient pressure for pressurized sampling) over the desired sample period. The flow rate can be calculated by

$$F = \frac{P \times V}{T \times 60}$$

where:

F = flow rate (cm^3/min).

P = final canister pressure, atmospheres absolute. P is approximately equal to

$$\frac{kPa_{gauge}}{101.2} + 1$$

V = volume of the canister (cm^3).

T = sample period (hours).

For example, if a 6-L canister is to be filled to 202 kPa (2 atmospheres) absolute pressure in 24 hours, the flow rate can be calculated by

$$F = \frac{2 \times 6000}{24 \times 60} = 8.3 \text{ cm}^3/\text{min}$$

9.1.3.2 For automatic operation, the timer is wired to start and stop the pump at appropriate times for the desired sample period. The timer must also control the solenoid valve, to open the valve when starting the pump and close the valve when stopping the pump.

9.1.3.3 The use of the Skinner Magnelatch valve avoids any substantial temperature rise that would occur with a conventional, normally closed solenoid valve that would have to be energized during the entire sample period. The temperature rise in the valve could cause outgassing of organic compounds from the Viton valve seat material. The Skinner Magnelatch valve requires only a brief electrical pulse to open or close at the appropriate start and stop times and therefore experiences no temperature increase. The pulses may be obtained either with an electronic timer that can be programmed for short (5 to 60 seconds) ON periods, or with a conventional mechanical timer and a special pulse circuit. A simple electrical pulse circuit for operating the Skinner Magnelatch solenoid valve with a conventional mechanical timer is illustrated in Figure 9(a). However, with this simple circuit, the valve may operate unreliably during brief power interruptions or if the timer is manually switched on and off too fast. A better circuit incorporating a time-delay relay to provide more reliable valve operation is shown in Figure 9(b).

9.1.3.4 The connecting lines between the sample inlet and the canister should be as short as possible to minimize their volume. The flow rate into the canister should remain relatively constant over the entire sampling period. If a critical orifice is used, some drop in the flow rate may occur near the end of the sample period as the canister pressure approaches the final calculated pressure.

9.1.3.5 As an option, a second electronic timer (see Section 7.1.1.6) may be used to start the auxiliary pump several hours prior to the sampling period to flush and condition the inlet line.

9.1.3.6 Prior to field use, each sampling system must pass a humid zero air certification (see Section 12.2.2). All plumbing should be checked carefully for leaks. The canisters must also pass a humid zero air certification before use (see Section 12.1).

9.2 Sampling Procedure

9.2.1 The sample canister should be cleaned and tested according to the procedure in Section 12.1.

9.2.2 A sample collection system is assembled as shown in Figure 2 (and Figure 3) and must meet certification requirements as outlined in Section 12.2.3. [Note: The sampling system should be contained in an appropriate enclosure.]

9.2.3 Prior to locating the sampling system, the user may want to perform "screening analyses" using a portable GC system, as outlined in Appendix B, to determine potential volatile organics present and potential "hot spots." The information gathered from the portable GC screening analysis would be used in developing a monitoring protocol, which includes the sampling system location, based upon the "screening analysis" results.

9.2.4 After "screening analysis," the sampling system is located. Temperatures of ambient air and sampler box interior are recorded on canister sampling field data sheet (Figure 10). [Note: The following discussion is related to Figure 2.]

9.2.5 To verify correct sample flow, a "practice" (evacuated) canister is used in the sampling system. [Note: For a subatmospheric sampler, the flow meter and practice canister are needed. For the pump-driven system, the practice canister is not needed, as the flow can be measured at the outlet of the system.] A certified mass flow meter is attached to the inlet line of the manifold, just in front of the filter. The canister is opened. The sampler is turned on and the reading of the certified mass flow meter is compared to the sampler mass flow controller. The values should agree within ±10%. If not, the sampler mass flow meter needs to be recalibrated or there is a leak in the system. This should be investigated and corrected. [Note: Mass flow meter readings may drift. Check the zero reading carefully and add or subtract the zero reading when reading or adjusting the sampler flow rate, to compensate for any zero drift.] After two minutes, the desired canister flow rate is adjusted to the proper value (as indicated by the certified mass flow meter) by the sampler flow control unit controller (e.g., 3.5 cm^3/min for 24 hr, 7.0 cm^3/min for 12 hr). Record final flow under "CANISTER FLOW RATE," Figure 10.

9.2.6 The sampler is turned off and the elapsed time meter is reset to 000.0. Note: Any time the sampler is turned off, wait at least 30 seconds to turn the sampler back on.

9.2.7 The "practice" canister and certified mass flow meter are disconnected and a clean certified (see Section 12.1) canister is attached to the system.

9.2.8 The canister valve and vacuum/pressure gauge valve are opened.

9.2.9 Pressure/vacuum in the canister is recorded on the canister sampling field data sheet (Figure 10) as indicated by the sampler vacuum/pressure gauge.

9.2.10 The vacuum/pressure gauge valve is closed and the maximum-minimum thermometer is reset to current temperature. Time of day and elapsed time meter readings are recorded on the canister sampling field data sheet.

9.2.11 The electronic timer is set to begin and stop the sampling period at the appropriate times. Sampling commences and stops by the programmed electronic timer.

9.2.12 After the desired sampling period, the maximum, minimum, current interior temperature and current ambient temperature are recorded on the sampling field data sheet. The current reading from the flow controller is recorded.

9.2.13 At the end of the sampling period, the vacuum/pressure gauge valve on the sampler is briefly opened and closed and the pressure/vacuum is recorded on the sampling field data sheet. Pressure should be close to desired pressure. [Note: For a subatmospheric sampling system, if the canister is at atmospheric pressure when the field final pressure check is performed, the sampling period may be suspect. This information should be noted on the sampling field data sheet.] Time of day and elapsed time meter readings are also recorded.

9.2.14 The canister valve is closed. The sampling line is disconnected from the canister and the canister is removed from the system. For a subatmospheric system, a certified mass flow meter is once again connected to the inlet manifold in front of the in-line filter and a "practice" canister is attached to the Magnelatch valve of the sampling system. The final flow rate is recorded on the canister sampling field data sheet (see Figure 10). [Note: For a pressurized system, the final flow may be measured directly.] The sampler is turned off.

9.2.15 An identification tag is attached to the canister. Canister serial number, sample number, location, and date are recorded on the tag.

10. Analytical System (See Figures 4, 5 and 6)

10.1 System Description

10.1.1 GC-MS-SCAN System

10.1.1.1 The analytical system is comprised of a GC equipped with a mass-selective detector set in the SCAN mode (see Figure 4). All ions are scanned by the MS repeatedly during the

GC run. The system includes a computer and appropriate software for data acquisition, data reduction, and data reporting. A 400 cm^3 air sample is collected from the canister into the analytical system. The sample air is first passed through a Nafion® dryer, through the 6-port chromatographic valve, then routed into a cryogenic trap. [Note: While the GC-multidetector analytical system does not employ a Nafion® dryer for drying the sample gas stream, it is used here because the GC-MS system utilizes a larger sample volume and is far more sensitive to excessive moisture than the GC-multidetector analytical system. Moisture can adversely affect detector precision. The Nafion® dryer also prevents freezing of moisture on the 0.32 mm I.D. column, which may cause column blockage and possible breakage.] The trap is heated (-160°C to 120°C in 60 sec) and the analyte is injected onto the OV-1 capillary column (0.32 mm x 50 m). [Note: Rapid heating of the trap provides efficient transfer of the sample components onto the gas chromatographic column.] Upon sample injection onto the column, the MS computer is signaled by the GC computer to begin detection of compounds which elute from the column. The gas stream from the GC is scanned within a preselected range of atomic mass units (amu). For detection of compounds in Table 1, the range should be 18 to 250 amu, resulting in a 1.5 Hz repetition rate. Six (6) scans per eluting chromatographic peak are provided at this rate. The 10-15 largest peaks are chosen by an automated data reduction program, the three scans nearest the peak apex are averaged, and a background subtraction is performed. A library search is then performed and the top ten best matches for each peak are listed. A qualitative characterization

of the sample is provided by this procedure. A typical chromatogram of VOCs determined by GC-MS-SCAN is illustrated in Figure 11(a).

10.1.1.2 A Nafion® permeable membrane dryer is used to remove water vapor selectively from the sample stream. The permeable membrane consists of Nafion® tubing (a copolymer of tetrafluoroethylene and fluorosulfonyl monomer) that is coaxially mounted within larger tubing. The sample stream is passed through the interior of the Nafion® tubing, allowing water (and other light, polar compounds) to permeate through the walls into a dry air purge stream flowing through the annular space between the Nafion® and outer tubing. [Note: To prevent excessive moisture build-up and any memory effects in the dryer, a clean-up procedure involving periodic heating of the dryer (100°C for 20 minutes) while purging with dry zero air (500 cm^3/min) should be implemented as part of the user's SOP manual. The clean-up procedure is repeated during each analysis (see Section 14, reference 7). Recent studies have indicated no substantial loss of targeted VOCs utilizing the above clean-up procedure (7). This cleanup procedure is particularly useful when employing cryogenic preconcentration of VOCs with subsequent GC analysis using a 0.32 mm I.D. column because excess accumulated water can cause trap and column blockage and also adversely affect detector precision. In addition, the improvement in water removal from the sampling stream will allow analyses of much larger volumes of sample air in the event that greater system sensitivity is required for targeted compounds.]

10.1.1.3 The packed metal tubing used for reduced temperature trapping of VOCs is shown in Figure 12. The cooling unit is comprised of a 0.32 cm outside diameter (O.D.) nickel tubing loop packed with 60-80 mesh Pyrex® beads (Nutech Model 320-01, or equivalent). The nickel tubing loop is wound onto a cylindrically formed tube heater (250 watt). A cartridge heater (25 watt) is sandwiched between pieces of aluminum plate at the trap inlet and outlet to provide additional heat to eliminate cold spots in the transfer tubing. During operation, the trap is inside a two-section stainless steel shell which is well insulated. Rapid heating (-150 to +100°C in 55 s) is accomplished by direct thermal contact between the heater and the trap tubing. Cooling is achieved by vaporization of the cryogen. In the shell, efficient cooling (+120 to -150°C in 225 s) is facilitated by confining the vaporized cryogen to the small open volume surrounding the trap assembly. The trap assembly and chromatographic valve are mounted on a baseplate fitted into the injection and auxiliary zones of the GC on an insulated pad directly above the column oven when used with the Hewlett-Packard 5880 GC. [Note: Alternative trap assembly and connection to the GC may be used depending upon user's requirements.] The carrier gas line is connected to the injection end of the analytical column with a zero-dead-volume fitting that is usually held in the heated zone above the GC oven. A 15 cm x 15 cm x 24 cm aluminum box is fitted over the sample handling elements to complete the package. Vaporized cryogen is vented through the top of the box.

10.1.1.4 As an option, the analyst may wish to split the gas stream exiting the column with a low dead-volume tee, passing one-third of the sample gas (1.0 mL/min) to the mass-selective detector and the remaining two-thirds (2.0 mL/min) through a flame ionization detector, as illustrated as an option in Figure 4. The use of the specific detector (MS-SCAN) coupled with the non-specific detector (FID) enables enhancement of data acquired from a single analysis. In particular, the FID provides the user:

- o Semi-real time picture of the progress of the analytical scheme;
- o Confirmation by the concurrent MS analysis of other labs that can provide only FID results; and
- o Ability to compare GC-FID with other analytical laboratories with only GC-FID capability.

10.1.2 GC-MS-SIM System

10.1.2.1 The analytical system is comprised of a GC equipped with an OV-1 capillary column (0.32 mm x 50 m) and a mass-selective detector set in the SIM mode (see Figure 4). The GC-MS is set up for automatic, repetitive analysis. The system is programmed to acquire data for only the target compounds and to disregard all others. The sensitivity is 0.1 ppbv for a 250 cm^3 air sample with analytical precision of about 5% relative standard deviation. Concentration of compounds based upon a previously installed calibration table is reported by an automated data reduction program. A Nafion® dryer is also employed by this analytical system prior to cryogenic preconcentration; therefore, many polar compounds are not identified by this procedure.

10.1.2.2 SIM analysis is based on a combination of retention times and relative abundances of selected ions (see Table 2). These qualifiers are stored on the hard disk of the GC-MS computer and are applied for identification of each chromatographic peak. The retention time qualifier is determined to be ± 0.10 minute of the library retention time of the compound. The acceptance level for relative abundance is determined to be ± 15% of the expected abundance, except for vinyl chloride and methylene chloride, which is determined to be ± 25%. Three ions are measured for most of the forty compounds. When compound identification is made by the computer, any peak that fails any of the qualifying tests is flagged (e.g., with an *). All the data should be manually examined by the analyst to determine the reason for the flag and whether the compound should be reported as found. While this adds some subjective judgment to the analysis, computer-generated identification problems can be clarified by an experienced operator. Manual inspection of the quantitative results should also be performed to verify concentrations outside the expected range. A typical chromatogram of VOCs determined by GC-MS-SIM mode is illustrated in Figure 11(b).

10.1.3 GC-Multidetector (GC-FID-ECD) System with Optional PID

10.1.3.1 The analytical system (see Figure 5) is comprised of a gas chromatograph equipped with a capillary column and electron capture and flame ionization detectors (see Figure 5). In typical operation, sample air from pressurized canisters is vented past the inlet to the analytical system from the canister at a flow rate of 75 cm^3/min. For analysis, only 35 cm^3/min of sample gas is used, while excess

is vented to the atmosphere. Sub-ambient pressure canisters are connected directly to the inlet. The sample gas stream is routed through a six port chromatographic valve and into the cryogenic trap for a total sample volume of 490 cm^3. [Note: This represents a 14 minute sampling period at a rate of 35 cm^3/min.] The trap (see Section 10.1.1.3) is cooled to -150°C by controlled release of a cryogen. VOCs and SVOCs are condensed on the trap surface while N_2, O_2, and other sample components are passed to the pump. After the organic compounds are concentrated, the valve is switched and the trap is heated. The revolatilized compounds are transported by helium carrier gas at a rate of 4 cm^3/min to the head of the Megabore® OV-1 capillary column (0.53 mm x 30 m). Since the column initial temperature is at -50°C, the VOCs and SVOCs are cryofocussed on the head of the column. Then, the oven temperature is programmed to increase and the VOCs/SVOCs in the carrier gas are chromatographically separated. The carrier gas containing the separated VOCs/SVOCs is then directed to two parallel detectors at a flow rate of 2 cm^3/min each. The detectors sense the presence of the speciated VOCs/SVOCs, and the response is recorded by either a strip chart recorder or a data processing unit.

10.1.3.2 Typical chromatograms of VOCs determined by the GC-FID-ECD analytical system are illustrated in Figures 11(c) and 11(d), respectively.

10.1.3.3 Helium is used as the carrier gas (4 cm^3/min) to purge residual air from the trap at the end of the sampling phase and to carry the revolatilized VOCs through the Megabore® GC column. Moisture and organic impurities are removed from the helium gas stream by a chemical purifier installed in the GC (see

Section 7.2.1.11). After exiting the OV-1 Megabore® column, the carrier gas stream is split to the two detectors at rates of 2 cm^3/min each.

10.1.3.4 Gas scrubbers containing Drierite® or silica gel and 5A molecular sieve are used to remove moisture and organic impurities from the zero air, hydrogen, and nitrogen gas streams. [Note: Purity of gas purifiers is checked prior to use by passing humid zero-air through the gas purifier and analyzing according to Section 12.2.2.]

10.1.3.5 All lines should be kept as short as practical. All tubing used for the system should be chromatographic grade stainless steel connected with stainless steel fittings. After assembly, the system should be checked for leaks according to manufacturer's specifications.

10.1.3.6 The FID burner air, hydrogen, nitrogen (make-up), and helium (carrier) flow rates should be set according to the manufacturer's instructions to obtain an optimal FID response while maintaining a stable flame throughout the analysis. Typical flow rates are: burner air, 450 cm^3/min; hydrogen, 30 cm^3/min; nitrogen, 30 cm^3/min; helium, 2 cm^3/min.

10.1.3.7 The ECD nitrogen make-up gas and helium carrier flow rates should be set according to manufacturer's instructions to obtain an optimal ECD response. Typical flow rates are: nitrogen, 76 cm^3/min and helium, 2 cm^3/min.

10.1.3.8 The GC-FID-ECD could be modified to include a PID (see Figure 6) for increased sensitivity (20). In the photoionization process, a molecule is ionized by ultraviolet light as follows: R + hv --> R + e-, where R+ is the ionized species and a photon is represented by hv, with energy less than or equal to the ionization potential of

the molecule. Generally all species with an ionization potential less than the ionization energy of the lamp are detected. Because the ionization potential of all major components of air (O_2, N_2, CO, CO_2, and H_2O) is greater than the ionization energy of lamps in general use, they are not detected. The sensor is comprised of an argon-filled, ultraviolet (UV) light source where a portion of the organic vapors are ionized in the gas stream. A pair of electrodes are contained in a chamber adjacent to the sensor. When a positive potential is applied to the electrodes, any ions formed by the absorption of UV light are driven by the created electronic field to the cathode, and the current (proportional to the organic vapor concentration) is measured. The PID is generally used for compounds having ionization potentials less than the ratings of the ultraviolet lamps. This detector is used for determination of most chlorinated and oxygenated hydrocarbons, aromatic compounds, and high molecular weight aliphatic compounds. Because the PID is insensitive to methane, ethane, carbon monoxide, carbon dioxide, and water vapor, it is an excellent detector. The electron volt rating is applied specifically to the wavelength of the most intense emission line of the lamp's output spectrum. Some compounds with ionization potentials above the lamp rating can still be detected due to the presence of small quantities of more intense light. A typical system configuration associated with the GC-FID-ECD-PID is illustrated in Figure 6. This system is currently being used in EPA's FY-88 Urban Air Toxics Monitoring Program.

10.2 GC-MS-SCAN-SIM System Performance Criteria

10.2.1 GC-MS System Operation

10.2.1.1 Prior to analysis, the GC-MS system is assembled and checked according to manufacturer's instructions.

10.2.1.2 Table 3.0 outlines general operating conditions for the GC-MS-SCAN-SIM system with optional FID.

10.2.1.3 The GC-MS system is first challenged with humid zero air (see Section 11.2.2).

10.2.1.4 The GC-MS and optional FID system is acceptable if it contains less than 0.2 ppbv of targeted VOCs.

10.2.2 Daily GC-MS Tuning (See Figure 13)

10.2.2.1 At the beginning of each day or prior to a calibration, the GC-MS system must be tuned to verify that acceptable performance criteria are achieved.

10.2.2.2 For tuning the GC-MS, a cylinder containing 4-bromofluorobenzene is introduced via a sample loop valve injection system. [Note: Some systems allow auto-tuning to facilitate this process.] The key ions and ion abundance criteria that must be met are illustrated in Table 4. Analysis should not begin until all those criteria are met.

10.2.2.3 The GC-MS tuning standard could also be used to assess GC column performance (chromatographic check) and as an internal standard. Obtain a background correction mass spectra of 4-bromofluorobenzene and check that all key ions criteria are met. If the criteria are not achieved, the analyst must retune the mass spectrometer and repeat the test until all criteria are achieved.

10.2.2.4 The performance criteria must be achieved before any samples, blanks or standards are analyzed. If

any key ion abundance observed for the daily 4-bromofluorobenzene mass tuning check differs by more than 10% absolute abundance from that observed during the previous daily tuning, the instrument must be retuned or the sample and/or calibration gases reanalyzed until the above condition is met.

10.2.3 GC-MS Calibration (See Figure 13)

[Note: Initial and routine calibration procedures are illustrated in Figure 13.]

10.2.3.1 Initial Calibration - Initially, a multipoint dynamic calibration (three levels plus humid zero air) is performed on the GC-MS system, before sample analysis, with the assistance of a calibration system (see Figure 8). The calibration system uses NBS traceable standards or NBS/EPA CRMs in pressurized cylinders [containing a mixture of the targeted VOCs at nominal concentrations of 10 ppmv in nitrogen (Section 8.2)] as working standards to be diluted with humid zero air. The contents of the working standard cylinder(s) are metered (2 cm^3/min) into the heated mixing chamber where they are mixed with a 2-L/min humidified zero air gas stream to achieve a nominal 10 ppbv per compound calibration mixture (see Figure 8). This nominal 10 ppbv standard mixture is allowed to flow and equilibrate for a minimum of 30 minutes. After the equilibration period, the gas standard mixture is sampled and analyzed by the real-time GC-MS system [see Figure 8(a) and Section 7.2.1]. The results of the analyses are averaged, flow audits are performed on the mass flow meters and the calculated concentration compared to generated values. After the GC-MS is calibrated at three concentration levels, a second humid zero air sample is passed through the system and analyzed. The second humid zero air test is used to verify that the GC-MS system is certified clean (less than 0.2 ppbv of target compounds).

10.2.3.2 As an alternative, a multipoint humid static calibration (three levels plus zero humid air) can be performed on the GC-MS system. During the humid static calibration analyses, three (3) SUMMA® passivated canisters are filled each at a different concentration between 1-20 ppbv from the calibration manifold using a pump and mass flow control arrangement [see Figure 8(c)]. The canisters are then delivered to the GC-MS to serve as calibration standards. The canisters are analyzed by the MS in the SIM mode, each analyzed twice. The expected retention time and ion abundance (see Table 2 and Table 5) are used to verify proper operation of the GC-MS system. A calibration response factor is determined for each analyte, as illustrated in Table 5, and the computer calibration table is updated with this information, as illustrated in Table 6.

10.2.3.3 Routine Calibration - The GC-MS system is calibrated daily (and before sample analysis) with a one-point calibration. The GC-MS system is calibrated either with the dynamic calibration procedure [see Figure 8(a)] or with a 6-L SUMMA® passivated canister filled with humid calibration standards from the calibration manifold (see Section 10.2.3.2). After the single point calibration, the GC-MS analytical system is challenged with a humidified zero gas stream to insure the analytical system returns to specification (less than 0.2 ppbv of selective organics).

10.3 GC-FID-ECD System Performance Criteria (With Optional PID System) (See Figure 14)

10.3.1 Humid Zero Air Certification

10.3.1.1 Before system calibration and sample analysis, the GC-FID-ECD analytical system is assembled and checked according to manufacturer's instructions.

10.3.1.2 The GC-FID-ECD system is first challenged with humid zero air (see Section 12.2.2) and monitored.

10.3.1.3 Analytical systems contaminated with less than 0.2 ppbv of targeted VOCs are acceptable.

10.3.2 GC Retention Time Windows Determination (See Table 7)

10.3.2.1 Before analysis can be performed, the retention time windows must be established for each analyte.

10.3.2.2 Make sure the GC system is within optimum operating conditions.

10.3.2.3 Make three injections of the standard containing all compounds for retention time window determination. [Note: The retention time window must be established for each analyte every 72 hours during continuous operation.]

10.3.2.4 Calculate the standard deviation of the three absolute retention times for each single component standard. The retention window is defined as the mean plus or minus three times the standard deviation of the individual retention times for each standard. In those cases where the standard deviation for a particular standard is zero, the laboratory must substitute the standard deviation of a closely-eluting, similar compound to develop a valid retention time window.

10.3.2.5 The laboratory must calculate retention time windows for each standard (see Table 7) on each GC column, whenever a new GC column is installed or when major components of the GC are changed. The data must be noted and retained in a notebook by the laboratory as part of the user SOP and as a quality assurance check of the analytical system.

10.3.3 GC Calibration

[Note: Initial and routine calibration procedures are illustrated in Figure 14.]

10.3.3.1 Initial Calibration - Initially, a multipoint dynamic calibration (three levels plus humid zero air) is performed on the GC-FID-ECD system, before sample analysis, with the assistance of a calibration system (see Figure 8). The calibration system uses NBS traceable standards or NBS/EPA CRMs in pressurized cylinders [containing a mixture of the targeted VOCs at nominal concentrations of 10 ppmv in nitrogen (Section 8.2)] as working standards to be diluted with humid zero air. The contents of the working standard cylinders are metered (2 cm^3/min) into the heated mixing chamber where they are mixed with a 2-L/min humidified zero air stream to achieve a nominal 10 ppbv per compound calibration mixture (see Figure 8). This nominal 10 ppbv standard mixture is allowed to flow and equilibrate for an appropriate amount of time. After the equilibration period, the gas standard mixture is sampled and analyzed by the GC-MS system [see Figure 8(a)]. The results of the analyses are averaged, flow audits are performed on the mass flow controllers used to generate the standards and the appropriate response factors (concentration/area counts) are calculated for each compound, as illustrated in Table 5. [Note: GC-FIDs are linear in the 1-20 ppbv range and may not require repeated multipoint calibrations; whereas, the GC-ECD will require frequent linearity evaluation.] Table 5 outlines typical calibration response factors

and retention times for 40 VOCs. After the GC-FID-ECD is calibrated at the three concentration levels, a second humid zero air sample is passed through the system and analyzed. The second humid zero air test is used to verify that the GC-FID-ECD system is certified clean (less than 0.2 ppbv of target compounds).

10.3.3.2 Routine Calibration - A one point calibration is performed daily on the analytical system to verify the initial multipoint calibration (see Section 10.3.3.1). The analyzers (GC-FID-ECD) are calibrated (before sample analysis) using the static calibration procedures (see Section 10.2.3.2) involving pressurized gas cylinders containing low concentrations of the targeted VOCs (10 ppbv) in nitrogen. After calibration, humid zero air is once again passed through the analytical system to verify residual VOCs are not present.

10.3.4 GC-FID-ECD-PID System Performance Criteria

10.3.4.1 As an option, the user may wish to include a photoionization detector (PID) to assist in peak identification and increase sensitivity.

10.3.4.2 This analytical system is presently being used in U.S. Environmental Protection Agency's Urban Air Toxic Pollutant Program (UATP).

10.3.4.3 Preparation of the GC-FID-ECD-PID analytical system is identical to the GC-FID-ECD system (see Section 10.3).

10.3.4.4 Table 8 outlines typical retention times (minutes) for selected organics using the GC-FID-ECD-PID analytical system.

10.4 Analytical Procedures

10.4.1 Canister Receipt

10.4.1.1 The overall condition of each sample canister is observed. Each canister should be received with an attached sample identification tag.

10.4.1.2 Each canister is recorded in the dedicated laboratory logbook. Also noted on the identification tag are date received and initials of recipient.

10.4.1.3 The pressure of the canister is checked by attaching a pressure gauge to the canister inlet. The canister valve is opened briefly and the pressure (kPa, psig) is recorded. [Note: If pressure is <83 kPa (<12 psig), the user may wish to pressurize the canisters, as an option, with zero grade nitrogen up to 137 kPa (20 psig) to ensure that enough sample is available for analysis. However, pressurizing the canister can introduce additional error, increase the minimum detection limit (MDL), and is time consuming. The user should weigh these limitations as part of his program objectives before pressurizing.] Final cylinder pressure is recorded on canister sampling field data sheet (see Figure 10).

10.4.1.4 If the canister pressure is increased, a dilution factor (DF) is calculated and recorded on the sampling data sheet.

$$DF = \frac{Y_a}{X_a}$$

where:

X_a = canister pressure (kPa, psia) absolute before dilution.

Y_a = canister pressure (kPa, psia) absolute after dilution.

After sample analysis, detected VOC concentrations are multiplied by the dilution factor to determine concentration in the sampled air.

10.4.2 GC-MS-SCAN Analysis (With Optional FID System)

10.4.2.1 The analytical system should be properly assembled, humid zero air certified (see Section 12.3), operated (see Table 3), and calibrated for accurate VOC determination.

10.4.2.2 The mass flow controllers are checked and adjusted to provide correct flow rates for the system.

10.4.2.3 The sample canister is connected to the inlet of the GC-MS-SCAN (with optional FID) analytical system. For pressurized samples, a mass flow controller is placed on the canister and the canister valve is opened and the canister flow is vented past a tee inlet to the analytical system at a flow of 75 cm^3/min so that 40 cm^3/min is pulled through the Nafion® dryer to the six-port chromatographic valve. [Note: Flow rate is not as important as acquiring sufficient sample volume.] Sub-ambient pressure samples are connected directly to the inlet.

10.4.2.4 The GC oven and cryogenic trap (inject position) are cooled to their set points of -50°C and -160°C, respectively.

10.4.2.5 As soon as the cryogenic trap reaches its lower set point of -160°C, the six-port chromatographic valve is turned to its fill position to initiate sample collection.

10.4.2.6 A ten minute collection period of canister sample is utilized. [Note: 40 cm^3/min x 10 min = 400 cm^3 sampled canister contents.]

10.4.2.7 After the sample is preconcentrated in the cryogenic trap, the GC sampling valve is cycled to the inject position and the cryogenic trap is heated. The trapped analytes are thermally desorbed onto the head of the OV-1 capillary column (0.31 mm I.D. x 50 m length). The GC oven is programmed to start at -50°C and after 2 min to heat to 150°C at a rate of 8°C per minute.

10.4.2.8 Upon sample injection onto the column, the MS is signaled by the computer to scan the eluting carrier gas from 18 to 250 amu, resulting in a 1.5 Hz repetition rate. This corresponds to about 6 scans per eluting chromatographic peak.

10.4.2.9 Primary identification is based upon retention time and relative abundance of eluting ions as compared to the spectral library stored on the hard disk of the GC-MS data computer.

10.4.2.10 The concentration (ppbv) is calculated using the previously established response factors (see Section 10.2.3.2), as illustrated in Table 5. [Note: If the canister is diluted before analysis, an appropriate multiplier is applied to correct for the volume dilution of the canister (Section 10.4.1.4).]

10.4.2.11 The optional FID trace allows the analyst to record the progress of the analysis.

10.4.3 GC-MS-SIM Analysis (With Optional FID System)

10.4.3.1 When the MS is placed in the SIM mode of operation, the MS monitors only preselected ions, rather than scanning all masses continuously between two mass limits.

10.4.3.2 As a result, increased sensitivity and improved quantitative analysis can be achieved.

10.4.3.3 Similar to the GC-MS-SCAN configuration, the GC-MS-SIM analysis is based on a combination of retention times and relative abundances of selected ions (see Table 2 and Table 5). These qualifiers are stored on the hard disk of the GC-MS computer and are applied for identification of each chromatographic peak. Once the GC-MS-SIM has identified the peak, a calibration response factor is used to determine the analyte's concentration.

10.4.3.4 The individual analyses are handled in three phases: data acquisition, data reduction, and data reporting. The data acquisition software is set in the SIM mode, where specific compound fragments are monitored by the MS at specific times in the analytical run. Data reduction is coordinated by the postprocessing macro program that is automatically accessed after data acquisition is completed at the end of the GC run. Resulting ion profiles are extracted, peaks are identified and integrated, and an internal integration report is generated by the program. A reconstructed ion chromatogram for hardcopy reference is prepared by the program and various parameters of interest such as time, date, and integration constants are printed. At the completion of the macro program, the data reporting software is accessed. The appropriate calibration table (see Table 9) is retrieved by the data reporting program from the computer's hard disk storage and the proper retention time and response factor parameters are applied to the macro program's integration file. With reference to certain pre-set acceptance criteria, peaks are automatically identified and quantified and a final summary report is prepared, as illustrated in Table 10.

10.4.4 GC-FID-ECD Analysis (With Optional PID System)

10.4.4.1 The analytical system should be properly assembled, humid zero air certified (see Section 12.2) and calibrated through a dynamic standard calibration procedure (see Section 10.3.2). The FID detector is lit and allowed to stabilize.

10.4.4.2 Sixty-four minutes are required for each sample analysis - 15 min for system initialization, 14 min for sample collection, 30 min for analysis, and 5 min for post-time, during which a report is printed. [Note: This may vary depending upon system configuration and programming.]

10.4.4.3 The helium and sample mass flow controllers are checked and adjusted to provide correct flow rates for the system. Helium is used to purge residual air from the trap at the end of the sampling phase and to carry the revolatilized VOCs from the trap onto the GC column and into the FID-ECD. The hydrogen, burner air, and nitrogen flow rates should also be checked. The cryogenic trap is connected and verified to be operating properly while flowing cryogen through the system.

10.4.4.4 The sample canister is connected to the inlet of the GC-FID-ECD analytical system. The canister valve is opened and the canister flow is vented past a tee inlet to the analytical system at 75 cm^3/min using a 0-500 cm^3/min Tylan mass flow controller. During analysis, 40 cm^3/min of sample gas is pulled through the six-port chromatographic valve and routed through the trap at the appropriate time while the extra sample is vented. The VOCs are condensed in the trap while the excess flow is exhausted through an exhaust vent, which assures that the sample air flowing through the trap is at atmospheric pressure.

10.4.4.5 The six-port valve is switched to the inject position and the canister valve is closed.

10.4.4.6 The electronic integrator is started.

10.4.4.7 After the sample is preconcentrated on the trap, the trap is heated and the VOCs are thermally desorbed onto the head of the capillary column. Since the column is at -50°C, the VOCs are cryofocussed on the column. Then, the oven temperature (programmed) increases and the VOCs elute from the column to the parallel FID-ECD assembly.

10.4.4.8 The peaks eluting from the detectors are identified by retention time (see Table 7 and Table 8), while peak areas are recorded in area

counts. Figures 15 and 16 illustrate typical response of the FID and ECD, respectively, for the forty (40) targeted VOCs. [Note: Refer to Table 7 for peak number and identification.]

10.4.4.9 The response factors (see Section 10.3.3.1) are multiplied by the area counts for each peak to calculate ppbv estimates for the unknown sample. If the canister is diluted before analysis, an appropriate dilution multiplier (DF) is applied to correct for the volume dilution of the canister (see Section 10.4.1.4).

10.4.4.10 Depending on the number of canisters to be analyzed, each canister is analyzed twice and the final concentrations for each analyte are the averages of the two analyses.

10.4.4.11 However, if the GC-FID-ECD analytical system discovers unexpected peaks which need further identification and attention or overlapping peaks are discovered, eliminating possible quantitation, the sample should then be subjected to a GC-MS-SCAN for positive identification and quantitation.

11. Cleaning and Certification Program

11.1 Canister Cleaning and Certification

11.1.1 All canisters must be clean and free of any contaminants before sample collection.

11.1.2 All canisters are leak tested by pressurizing them to approximately 206 kPa (30 psig) with zero air. [Note: The canister cleaning system in Figure 7 can be used for this task.] The initial pressure is measured, the canister valve is closed, and the final pressure is checked after 24 hours. If leak tight, the pressure should not vary more than ± 13.8 kPa (± 2 psig) over the 24 hour period.

11.1.3 A canister cleaning system may be assembled as illustrated in Figure 7. Cryogen is added to both the vacuum pump and zero air supply traps. The canister(s)

are connected to the manifold. The vent shut-off valve and the canister valve(s) are opened to release any remaining pressure in the canister(s). The vacuum pump is started and the vent shut-off valve is then closed and the vacuum shut-off valve is opened. The canister(s) are evacuated to < 0.05 mm Hg (for at least one hour). [Note: On a daily basis or more often if necessary, the cryogenic traps should be purged with zero air to remove any trapped water from previous canister cleaning cycles.]

11.1.4 The vacuum and vacuum/pressure gauge shut-off valves are closed and the zero air shut-off valve is opened to pressurize the canister(s) with humid zero air to approximately 206 kPa (30 psig). If a zero gas generator system is used, the flow rate may need to be limited to maintain the zero air quality.

11.1.5 The zero shut-off valve is closed and the canister(s) is allowed to vent down to atmospheric pressure through the vent shut-off valve. The vent shut-off valve is closed. Steps 11.1.3 through 11.1.5 are repeated two additional times for a total of three (3) evacuation/pressurization cycles for each set of canisters.

11.1.6 At the end of the evacuation/pressurization cycle, the canister is pressurized to 206 kPa (30 psig) with humid zero air. The canister is then analyzed by a GC-MS or GC-FID-ECD analytical system. Any canister that has not tested clean (compared to direct analysis of humidified zero air of less than 0.2 ppbv of targeted VOCs) should not be used. As a "blank" check of the canister(s) and cleanup procedure, the final humid zero air fill of 100% of the canisters is analyzed until the cleanup system and canisters are proven reliable (less than 0.2 ppbv of targets VOCs). The check can then be reduced to a lower percentage of canisters.

11.1.7 The canister is reattached to the cleaning manifold and is then reevacuated to <0.05 mm Hg and remains in this condition until used. The canister valve is closed. The canister is removed from the cleaning system and the canister connection is capped with a stainless steel fitting.

The canister is now ready for collection of an air sample. An identification tag is attached to the neck of each canister for field notes and chain-of-custody purposes.

11.1.8 As an option to the humid zero air cleaning procedures, the canisters could be heated in an isothermal oven to 100°C during Section 11.1.3 to ensure that lower molecular weight compounds (C_2-C_8) are not retained on the walls of the canister. [Note: For sampling heavier, more complex VOC mixtures, the canisters should be heated to 250°C during Section 11.1.3.7.] Once heated, the canisters are evacuated to 0.05 mm Hg. At the end of the heated/evacuated cycle, the canisters are pressurized with humid zero air and analyzed by the GC-FID-ECD system. Any canister that has not tested clean (less than 0.2 ppbv of targeted compounds) should not be used. Once tested clean, the canisters are reevacuated to 0.05 mm Hg and remain in the evacuated state until used.

11.2 Sampling System Cleaning and Certification

11.2.1 Cleaning Sampling System Components

11.2.1.1 Sample components are disassembled and cleaned before the sampler is assembled. Nonmetallic parts are rinsed with HPLC grade deionized water and dried in a vacuum oven at 50°C. Typically, stainless steel parts and fittings are cleaned by placing them in a beaker of methanol in an ultrasonic bath for 15 minutes. This procedure is repeated with hexane as the solvent.

11.2.1.2 The parts are then rinsed with HPLC grade deionized water and dried in a vacuum oven at 100°C for 12 to 24 hours.

11.2.1.3 Once the sampler is assembled, the entire system is purged with humid zero air for 24 hours.

11.2.2 Humid Zero Air Certification

[Note: In the following sections, "certification" is defined as evaluating the sampling system with humid

zero air and humid calibration gases that pass through all active components of the sampling system. The system is "certified" if no significant additions or deletions (less than 0.2 ppbv of targeted compounds) have occurred when challenged with the test gas stream.]

11.2.2.1 The cleanliness of the sampling system is determined by testing the sampler with humid zero air without an evacuated gas cylinder, as follows.

11.2.2.2 The calibration system and manifold are assembled, as illustrated in Figure 8. The sampler (without an evacuated gas cylinder) is connected to the manifold and the zero air cylinder activated to generate a humid gas stream (2 L/min) to the calibration manifold [see Figure 8(b)].

11.2.2.3 The humid zero gas stream passes through the calibration manifold, through the sampling system (without an evacuated canister) to a GC-FID-ECD analytical system at 75 cm^3/min so that 40 cm^3/min is pulled through the six-port valve and routed through the cryogenic trap (see Section 10.2.2.1) at the appropriate time while the extra sample is vented. [Note: The exit of the sampling system (without the canister) replaces the canister in Figure 4.] After the sample (400 mL) is preconcentrated on the trap, the trap is heated and the VOCs are thermally desorbed onto the head of the capillary column. Since the column is at -50°C, the VOCs are cryofocussed on the column. Then, the oven temperature (programmed) increases and the VOCs begin to elute and are detected by a GC-MS (see Section 10.2) or the GC-FID-ECD (see Section 10.3). The analytical system should not detect greater than 0.2 ppbv of targeted VOCs in order for the sampling system to pass the humid zero air certification

test. Chromatograms of a certified sampler and contaminated sampler are illustrated in Figures 17(a) and (b), respectively. If the sampler passes the humid zero air test, it is then tested with humid calibration gas standards containing selected VOCs at concentration levels expected in field sampling (e.g., 0.5 to 2 ppbv) as outlined in Section 11.2.3.

11.2.3 Sampler System Certification with Humid Calibration Gas Standards

11.2.3.1 Assemble the dynamic calibration system and manifold as illustrated in Figure 8.

11.2.3.2 Verify that the calibration system is clean (less than 0.2 ppbv of targeted compounds) by sampling a humidified gas stream, <u>without</u> gas calibration standards, with a previously certified clean canister (see Section 12.1).

11.2.3.3 The assembled dynamic calibration system is certified clean if less than 0.2 ppbv of targeted compounds are found.

11.2.3.4 For generating the humidified calibration standards, the calibration gas cylinder(s) (see Section 8.2) containing nominal concentrations of 10 ppmv in nitrogen of selected VOCs, are attached to the calibration system, as outlined in Section 10.2.3.1. The gas cylinders are opened and the gas mixtures are passed through 0 to 10 cm^3/min certified mass flow controllers to generate ppb levels of calibration standards.

11.2.3.5 After the appropriate equilibrium period, attach the sampling system (containing a certified evacuated canister) to the manifold, as illustrated in Figure 8(a).

11.2.3.6 Sample the dynamic calibration gas stream with the sampling system according to Section 9.2.1. [Note: To conserve generated calibration gas, bypass the canister sampling system manifold and attach the sampling system to the calibration gas stream at the inlet of the in-line filter of the sampling system so the flow will be less than 500 cm^3/min.]

11.2.3.7 Concurrent with the sampling system operation, realtime monitoring of the calibration gas stream is accomplished by the on-line GC-MS or GC-multidetector analytical system [Figure 8(b)] to provide reference concentrations of generated VOCs.

11.2.3.8 At the end of the sampling period (normally same time period used for anticipated sampling), the sampling system canister is analyzed and compared to the reference GC-MS or GC-multidetector analytical system to determine if the concentration of the targeted VOCs was increased or decreased by the sampling system.

11.2.3.9 A recovery of between 90% and 110% is expected for all targeted VOCs.

12. Performance Criteria and Quality Assurance

12.1 Standard Operating Procedures (SOPs)

12.1.1 SOPs should be generated in each laboratory describing and documenting the following activities: (1) assembly, calibration, leak check, and operation of specific sampling systems and equipment used; (2) preparation, storage, shipment, and handling of samples; (3) assembly, leak-check, calibration, and operation of the analytical system, addressing the specific equipment used; (4) canister storage and cleaning; and (5) all aspects of data recording and processing, including lists of computer hardware and software used.

12.1.2 Specific stepwise instructions should be provided in the SOPs and should be readily available to and understood by the laboratory personnel conducting the work.

12.2 Method Relative Accuracy and Linearity

12.2.1 Accuracy can be determined by injecting VOC standards (see Section 8.2) from an audit cylinder into a sampler. The contents are then analyzed for the components contained in the audit canister. Percent relative accuracy is calculated:

$$\% \text{ Relative Accuracy} = \frac{Y - X}{X} \times 100$$

Where: Y = Concentration of the targeted compound recovered from sampler.

X = Concentration of VOC targeted compound in the NBS-SRM or EPA-CRM audit cylinders.

12.2.2 If the relative accuracy does not fall between 90 and and 110 percent, the field sampler should be removed from use, cleaned, and recertified according to initial certification procedures outlined in Section 11.2.2 and Section 11.2.3. Historically, concentrations of carbon tetrachloride, tetrachloroethylene, and hexachlorobutadiene have sometimes been detected at lower concentrations when using parallel ECD and FID detectors. When these three compounds are present at concentrations close to calibration levels, both detectors usually agree on the reported concentrations. At concentrations below 4 ppbv, there is a problem with nonlinearity of the ECD. Plots of concentration versus peak area for calibration compounds detected by the ECD have shown that the curves are nonlinear for carbon tetrachloride, tetrachloroethylene, and hexachlorobutadiene, as illustrated in Figures 18(a) through 18(c). Other targeted ECD and FID compounds scaled linearly for the range 0 to 8 ppbv, as shown for chloroform in Figure 18(d). For compounds that are not linear over the calibration

range, area counts generally roll off between 3 and 4 ppbv. To correct for the nonlinearity of these compounds, an additional calibration step is performed. An evacuated stainless steel canister is pressurized with calibration gas at a nominal concentration of 8 ppbv. The sample is then diluted to approximately 3.5 ppbv with zero air and analyzed. The instrument response factor (ppbv/area) of the ECD for each of the three compounds is calculated for the 3.5 ppbv sample. Then, both the 3.5 ppbv and the 8 ppbv response factors are entered into the ECD calibration table. The software for the Hewlett-Packard 5880 level 4 GC is designed to accommodate multilevel calibration entries, so the correct response factors are automatically calculated for concentrations in this range.

12.3 Method Modification

12.3.1 Sampling

12.3.1.1 The sampling system for pressurized canister sampling could be modified to use a lighter, more compact pump. The pump currently being used weighs about 16 kilograms (35 lbs). Commercially available pumps that could be used as alternatives to the prescribed sampler pump are described below. <u>Metal Bellows MB-41 pump:</u> These pumps are cleaned at the factory; however, some precaution should be taken with the circular (4.8 cm diameter) Teflon® and stainless steel part directly under the flange. It is often dirty when received and should be cleaned before use. This part is cleaned by removing it from the pump, manually cleaning with deionized water, and placing in a vacuum oven at 100°C for at least 12 hours. Exposed parts of the pump head are also cleaned with swabs and allowed to air dry. These pumps have

proven to be very reliable; however, they are only useful up to an outlet pressure of about 137 kPa (20 psig). Neuberger Pump: Viton gaskets or seals must be specified with this pump. The "factory direct" pump is received contaminated and leaky. The pump is cleaned by disassembling the pump head (which consists of three stainless steel parts and two gaskets), cleaning the gaskets with deionized water and drying in a vacuum oven, and remachining (or manually lapping) the sealing surfaces of the stainless steel parts. The stainless steel parts are then cleaned with methanol, hexane, deionized water and heated in a vacuum oven. The cause for most of the problems with this pump has been scratches on the metal parts of the pump head. Once this rework procedure is performed, the pump is considered clean and can be used up to about 240 kPa (35 psig) output pressure. This pump is utilized in the sampling system illustrated in Figure 3.

12.3.1.2 Urban Air Toxics Sampler

The sampling system described in this method can be modified like the sampler in EPA's FY-88 Urban Air Toxics Pollutant Program. This particular sampler is described in Appendix C (see Figure 19).

12.3.2 Analysis

12.3.2.1 Inlet tubing from the calibration manifold could be heated to 50°C (same temperature as the calibration manifold) to prevent condensation on the internal walls of the system.

12.3.2.2 The analytical strategy for Method TO-14 involves positive identification and quantitation by GC-MS-SCAN-SIM mode of operation with optional FID. This is a highly specific and sensitive detection technique. Because a specific detector system (GC-MS-SCAN-SIM) is more complicated and expensive than the use of non-specific detectors

(GC-FID-ECD-PID), the analyst may want to perform a screening analysis and preliminary quantitation of VOC species in the sample, including any polar compounds, by utilizing the GC-multidetector (GC-FID-ECD-PID) analytical system prior to GC-MS analysis. This system can be used for approximate quantitation. The GC-FID-ECD-PID provides a "snapshot" of the constituents in the sample, allowing the analyst to determine:

- Extent of misidentification due to overlapping peaks,
- Whether the constituents are within the calibration range of the anticipated GC-MS-SCAN-SIM analysis or does the sample require further dilution, and
- Are there unexpected peaks which need further identification through GC-MS-SCAN or are there peaks of interest needing attention?

If unusual peaks are observed from the GC-FID-ECD-PID system, the analyst then performs a GC-MS-SCAN analysis. The GC-MS-SCAN will provide positive identification of suspect peaks from the GC-FID-ECD-PID system. If no unusual peaks are identified and only a select number of VOCs are of concern, the analyst can then proceed to GC-MS-SIM. The GC-MS-SIM is used for final quantitation of selected VOCs. Polar compounds, however, cannot be identified by the GC-MS-SIM due to the use of a Nafion® dryer to remove water from the sample prior to analysis. The dryer removes polar compounds along with the water. The analyst often has to make this decision incorporating project objectives, detection limits, equipment availability, cost and personnel capability in developing an analytical strategy. Figure 20 outlines the use of the GC-FID-ECD-PID as a "screening" approach, with the GC-MS-SCAN-SIM for final identification and quantitation.

12.4 Method Safety

This procedure may involve hazardous materials, operations, and equipment. This method does not purport to address all of the safety problems associated with its use. It is the user's responsibility to establish appropriate safety and health practices and determine the applicability of regulatory limitations prior to the implementation of this procedure. This should be part of the user's SOP manual.

12.5 Quality Assurance (See Figure 21)

12.5.1 Sampling System

12.5.1.1 Section 9.2 suggests that a portable GC system be used as a "screening analysis" prior to locating fixed-site samplers (pressurized or subatmospheric).

12.5.1.2 Section 9.2 requires pre and post-sampling measurements with a certified mass flow controller for flow verification of sampling system.

12.5.1.3 Section 11.1 requires all canisters to be pressure tested to 207 kPa ± 14 kPa (30 psig ± 2 psig) over a period of 24 hours.

12.5.1.4 Section 11.1 requires that all canisters be certified clean (containing less than 0.2 ppbv of targeted VOCs) through a humid zero air certification program.

12.5.1.5 Section 11.2.2 requires all field sampling systems to be certified initially clean (containing less than 0.2 ppbv of targeted VOCs) through a humid zero air certification program.

12.5.1.6 Section 11.2.3 requires all field sampling systems to pass an initial humidified calibration gas certification [at VOC concentration levels expected in the field (e.g., 0.5 to 2 ppbv)] with a percent recovery of greater than 90.

12.5.2 GC-MS-SCAN-SIM System Performance Criteria

12.5.2.1 Section 10.2.1 requires the GC-MS analytical system to be certified clean (less than 0.2

ppbv of targeted VOCs) prior to sample analysis, through a humid zero air certification.

12.5.2.2 Section 10.2.2 requires the daily tuning of the GC-MS with 4-bromofluorobenzene (4-BFB) and that it meet the key ions and ion abundance critera (10%) outlined in Table 5.

12.5.2.3 Section 10.2.3 requires both an initial multipoint humid static calibration (three levels plus humid zero air) and a daily calibration (one point) of the GC-MS analytical system.

12.5.3 GC-Multidetector System Performance Criteria

12.5.3.1 Section 10.3.1 requires the GC-FID-ECD analytical system, prior to analysis, to be certified clean (less than 0.2 ppbv of targeted VOCs) through a humid zero air certification.

12.5.3.2 Section 10.3.2 requires that the GC-FID-ECD analytical system establish retention time windows for each analyte prior to sample analysis, when a new GC column is installed, or major components of the GC system altered since the previous determination.

12.5.3.3 Section 8.2 requires that all calibration gases be traceable to a National Bureau of Standards (NBS) Standard Reference Material (SRM) or to a NBS/EPA approved Certified Reference Material (CRM).

12.5.3.4 Section 10.3.2 requires that the retention time window be established throughout the course of a 72-hr analytical period.

12.5.3.5 Section 10.3.3 requires both an initial multipoint calibration (three levels plus humid zero air) and a daily calibration (one point) of the GC-FID-ECD analytical system with zero gas dilution of NBS traceable or NBS/EPA CRMs gases. [Note: Gas cylinders of VOCs at the ppm and ppb level are available for audits from the USEPA, Environmental Monitoring Systems

Laboratory, Quality Assurance Division, MD-77B, Research Triangle Park, NC 27711, (919)541-4531. Appendix A outlines five groups of audit gas cylinders available from USEPA.]

13. Acknowledgements

The determination of volatile and some semi-volatile organic compounds in ambient air is a complex task, primarily because of the wide variety of compounds of interest and the lack of standardized sampling and analytical procedures. While there are numerous procedures for sampling and analyzing VOCs/SVOCs in ambient air, this method draws upon the best aspects of each one and combines them into a standardized methodology. To that end, the following individuals contributed to the research, documentation and peer review of this manuscript.

Topic	Contact	Address	Telephone No.
Sampling System	Mr. Frank McElroy Mr. Vince Thompson	U.S. Environmental Protection Agency Environmental Monitoring Systems Laboratory MD-77 Research Triangle Park, N.C. 27711	919-541-2622 919-541-3791
	Dr. Bill McClenny Mr. Joachim Pleil	U.S. Environmental Protection Agency Environmental Monitoring Systems Laboratory MD-44 Research Triangle Park, N.C. 27711	919-541-3158 919-541-4680
	Mr. Tom Merrifield	Anderson Samplers, Inc. 4215-C Wendell Drive Atlanta, GA 30336	1-800-241-6898
	Mr. Joseph P. Krasnec	Scientific Instrumentation Specialists, Inc. P.O. Box 8941 Moscow, Idaho, 83843	208-882-3860
Analytical System			
GC-FID-ECD	Dr. Bill McClenny Mr. Joachim Pleil	U.S. Environmental Protection Agency Environmental Monitoring Systems Laboratory MD-44 Research Triangle Park, N.C. 27711	919-541-3158 919-541-4680
	Ms. Karen D. Oliver	Northrop Services, Inc. Environmental Sciences P.O. Box 12313 Research Triangle Park, N.C. 27709	919-549-0611
GC-FID-ECD-PID	Dave-Paul Dayton JoAnn Rice	Radian Corporation P.O. Box 13000 Progress Center Research Triangle Park, N.C. 27709	919-481-0212

Topic	Contact	Address	Telephone No.
GC-MS-SCAN-SIM	Dr. Bill McClenny Mr. Joachim Pleil	U.S. Environmental Protection Agency Environmental Monitoring Systems Laboratory MD-44 Research Triangle Park, N.C. 27711	919-541-3158 919-541-4680
	Mr. John V. Hawkins	Research Triangle Laboratories, Inc. P.O. Box 12507 Research Triangle Park, N.C. 27709	919-544-5775
Canister Cleaning Certification and VOC Canister Storage Stability	Mr. Vince Thompson	U.S. Environmental Protection Agency Environmental Monitoring Systems Laboratory MD-77 Research Triangle Park, N.C. 27711	919-541-3791
	Dr. Bill McClenny Mr. Joachim Pleil	U.S. Environmental Protection Agency Environmental Monitoring Systems Laboratory MD-44 Research Triangle Park, N.C. 27711	919-541-3158 919-541-4680
	Dave-Paul Dayton JoAnn Rice	Radian Corporation P.O. Box 13000 Progress Center Research Triangle Park, N.C. 27709	919-481-0212
	Dr. R.K.M. Jayanty	Research Triangle Institute P.O. Box 12194 Research Triangle Park, N.C. 27709	919-541-6000
Cryogenic Sampling Unit	Mr. Lou Ballard Mr. Pete Watson	NuTech Corporation 2806 Cheek Road Durham, N.C., 27704	919-682-0402
	Mr. Joachim Pleil	U.S. Environmental Protection Agency Environmental Monitoring Systems Laboratory MD-44 Research Triangle Park, N.C. 27711	919-541-4680
U.S. EPA Audit Gas Standards	Mr. Bob Lampe	U.S. Environmental Protection Agency Environmental Monitoring Systems Laboratory MD-77B Research Triangle Park, N.C.27711	919-541-4531

14. REFERENCES

1. K. D. Oliver, J. D. Pleil, and W. A. McClenny, "Sample Integrity of Trace Level Volatile Organic Compounds in Ambient Air Stored in SUMMA® Polished Canisters," Atmospheric Environ. 20:1403, 1986.

2. M. W. Holdren and D. L. Smith, "Stability of Volatile Organic Compounds While Stored in SUMMA® Polished Stainless Steel Canisters," Final Report, EPA Contract No. 68-02-4127, Research Triangle Park, NC, Battelle Columbus Laboratories, January, 1986.

3. Ralph M. Riggin, Technical Assistance Document for Sampling and Analysis of Toxic Organic Compounds in Ambient Air, EPA-600/4-83-027, U.S. Environmental Protection Agency, Research Triangle Park, NC, 1983.

4. Ralph M. Riggin, Compendium of Methods for the Determination of Toxic Organic Compounds in Ambient Air, EPA-600/4-84-041, U.S. Environmental Protection Agency, Research Triangle Park, NC, 1986.

5. W. T. Winberry and N. V. Tilley, Supplement to EPA-600/4-84-041: Compendium of Methods for the Determination of Toxic Organic Compounds in Ambient Air, EPA-600/4-87-006, U.S. Environmental Protection Agency, Research Triangle Park, NC, 1986.

6. W. A. McClenny, J. D Pleil, J. W. Holdren, and R. N. Smith, "Automated Cryogenic Preconcentration and Gas Chromatographic Determination of Volatile Organic Compounds," Anal. Chem. 56:2947, 1984.

7. J. D. Pleil and K. D. Oliver, "Evaluation of Various Configurations of Nafion Dryers: Water Removal from Air Samples Prior to Gas Chromatographic Analysis," EPA Contract No. 68-02-4035, Research Triangle Park, NC, Northrop Services, Inc.- Environmental Sciences, 1985.

8. K. D. Oliver and J. D. Pleil, "Automated Cryogenic Sampling and Gas Chromatographic Analysis of Ambient Vapor-Phase Organic Compounds: Procedures and Comparison Tests," EPA Contract No. 68-02-4035, Research Triangle Park, NC, Northrop Services, Inc.- Environmental Sciences, 1985.

9. W. A. McClenny and J. D. Pleil, "Automated Calibration and Analysis of VOCs with a Capillary Column Gas Chromatograph Equipped for Reduced Temperature Trapping," Proceedings of the 1984 Air Pollution Control Association Annual Meeting, San Francisco, CA, June 24-29, 1984.

10. W. A. McClenny, J. D. Pleil, T. A. Lumpkin, and K. D. Oliver, "Update on Canister-Based Samplers for VOCs," Proceedings of the 1987 EPA/APCA Symposium on Measurement of Toxic and Related Air Pollutants, May, 1987 APCA Publication VIP-8, EPA 600/9-87-010.

11. J. D. Pleil, "Automated Cryogenic Sampling and Gas Chromatographic Analysis of Ambient Vapor-Phase Organic Compounds: System Design," EPA Contract No. 68-02-2566, Research Triangle Park, NC, Northrop Services, Inc.- Environmental Sciences, 1982.

12. K. D. Oliver and J. D. Pleil, "Analysis of Canister Samples Collected During the CARB Study in August 1986," EPA Contract No. 68-02-4035, Research Triangle Park, NC, Northrop Services, Inc,- Environmental Sciences, 1987.

13. J. D. Pleil and K. D. Oliver, "Measurement of Concentration Variability of Volatile Organic Compounds in Indoor Air: Automated Operation of a Sequential Syringe Sampler and Subsequent GC/MS Analysis," EPA Contract No. 68-02-4444, Research Triangle Park, NC, Northrop Services, Inc. - Environmental Sciences, 1987.

14. J. F. Walling, "The Utility of Distributed Air Volume Sets When Sampling Ambient Air Using Solid Adsorbents," Atmospheric Environ., 18:855-859, 1984.

15. J. F. Walling, J. E. Bumgarner, J. D. Driscoll, C. M. Morris, A. E. Riley, and L. H. Wright, "Apparent Reaction Products Desorbed From Tenax Used to Sample Ambient Air," Atmospheric Environ., 20: 51-57, 1986.

16. Portable Instruments User's Manual for Monitoring VOC Sources, EPA-340/1-88-015, U.S. Environmental Protection Agency, Office of Air Quality Planning and Standards, Washington, DC, June, 1986.

17. F. F. McElroy, V. L. Thompson, H. G. Richter, A Cryogenic Preconcentration - Direct FID (PDFID) Method for Measurement of NMOC in the Ambient Air, EPA-600/4-85-063, U.S. Environmental Protection Agency, Research Triangle Park, NC, August 1985.

18. R. A. Rasmussen and J. E. Lovelock, "Atmospheric Measurements Using Canister Technology," J. Geophys. Res., 83: 8369-8378, 1983.

19. R. A. Rasmussen and M.A.K. Khalil, "Atmospheric Halocarbons: Measurements and Analysis of Selected Trace Gases," Proc. NATO ASI on Atmospheric Ozone, BO: 209-231.

20. Dave-Paul Dayton and JoAnn Rice, "Development and Evaluation of a Prototype Analytical System for Measuring Air Toxics," Final Report, Radian Corporation for the U.S. Environmental Protection Agency, Environmental Monitoring Systems Laboratory, Research Triangle Park, NC 27711, EPA Contract No. 68-02-3889, WA No. 120, November, 1987.

TABLE 1. VOLATILE ORGANIC COMPOUND DATA SHEET

COMPOUND (SYNONYM)	FORMULA	MOLECULAR WEIGHT	BOILING POINT (°C)	MELTING POINT (°C)	CAS NUMBER
Freon 12 (Dichlorodifluoromethane)	Cl_2CF_2	120.91	-29.8	-158.0	
Methyl chloride (Chloromethane)	CH_3Cl	50.49	-24.2	-97.1	74-87-3
Freon 114 (1,2-Dichloro-1,1,2,2-tetrafluoroethane)	$ClCF_2CClF_2$	170.93	4.1	-94.0	
Vinyl chloride (Chloroethylene)	$CH_2{=}CHCl$	62.50	-13.4	-1538.0	75-01-4
Methyl bromide (Bromomethane)	CH_3Br	94.94	3.6	-93.6	74-83-9
Ethyl chloride (Chloroethane)	CH_3CH_2Cl	64.52	12.3	-136.4	75-00-3
Freon 11 (Trichlorofluoromethane)	CCl_3F	137.38	23.7	-111.0	
Vinylidene chloride (1,1-Dichloroethene)	$C_2H_2Cl_2$	96.95	31.7	-122.5	75-35-4
Dichloromethane (Methylene chloride)	CH_2Cl_2	84.94	39.8	-95.1	75-09-2
Freon 113 (1,1,2-Trichloro-1,2,2-trifluoroethane)	CF_2ClCCl_2F	187.38	47.7	-36.4	
1,1-Dichloroethane (Ethylidene chloride)	CH_3CHCl_2	98.96	57.3	-97.0	74-34-3
cis-1,2-Dichloroethylene	$CHCl{=}CHCl$	96.94	60.3	-80.5	
Chloroform (Trichloromethane)	$CHCl_3$	119.38	61.7	-63.5	67-66-3
1,2-Dichloroethane (Ethylene dichloride)	$ClCH_2CH_2Cl$	98.96	83.5	-35.3	107-06-2
Methyl chloroform (1,1,1-Trichloroethane)	CH_3CCl_3	133.41	74.1	-30.4	71-55-6
Benzene (Cyclohexatriene)	C_6H_6	78.12	80.1	5.5	71-43-2
Carbon tetrachloride (Tetrachloromethane)	CCl_4	153.82	76.5	-23.0	56-23-5
1,2-Dichloropropane (Propylene dichloride)	$CH_3CHClCH_2Cl$	112.99	96.4	-100.4	78-87-5
Trichloroethylene (Trichloroethene)	$ClCH{=}CCl_2$	131.29	87	-73.0	79-01-6
cis-1,3-Dichloropropene (cis-1,3-dichloropropylene)	$CH_3CCl{=}CHCl$	110.97	76		

T014-60

TABLE 1. VOLATILE ORGANIC COMPOUND DATA SHEET (cont.)

COMPOUND (SYNONYM)	FORMULA	MOLECULAR WEIGHT	BOILING POINT(°C)	MELTING POINT (°C)	CAS NUMBER
trans-1,3-Dichloropropene (cis-1,3-Dichloropropylene)	$ClCH_2CH{=}CHCl$	110.97	112.0		
1,1,2-Trichloroethane (Vinyl trichloride)	$CH_2ClCHCl_2$	133.41	113.8	-36.5	79-00-5
Toluene (Methyl benzene)	$C_6H_5CH_3$	92.15	110.6	-95.0	108-88-3
1,2-Dibromoethane (Ethylene dibromide)	$BrCH_2CH_2Br$	187.88	131.3	9.8	106-93-4
Tetrachloroethylene (Perchloroethylene)	$Cl_2C{=}CCl_2$	165.83	121.1	-19.0	127-18-4
Chlorobenzene (Phenyl chloride)	C_6H_5Cl	112.56	132.0	-45.6	108-90-7
Ethylbenzene	$C_6H_5C_2H_5$	106.17	136.2	-95.0	100-41-4
m-Xylene (1,3-Dimethylbenzene)	$1,3\text{-}(CH_3)_2C_6H_4$	106.17	139.1	-47.9	
p-Xylene (1,4-Dimethylxylene)	$1,4\text{-}(CH_3)_2C_6H_4$	106.17	138.3	13.3	
Styrene (Vinyl benzene)	$C_6H_5CH{=}CH_2$	104.16	145.2	-30.6	100-42-5
1,1,2,2-Tetrachloroethane	$CHCl_2CHCl_2$	167.85	146.2	-36.0	79-34-5
o-Xylene (1,2-Dimethylbenzene)	$1,2\text{-}(CH_3)_2C_6H_4$	106.17	144.4	-25.2	
1,3,5-Trimethylbenzene (Mesitylene)	$1,3,5\text{-}(CH_3)_3C_6H_6$	120.20	164.7	-44.7	108-67-8
1,2,4-Trimethylbenzene (Pseudocumene)	$1,2,4\text{-}(CH_3)_3C_6H_6$	120.20	169.3	-43.8	95-63-6
m-Dichlorobenzene (1,3-Dichlorobenzene)	$1,3\text{-}Cl_2C_6H_4$	147.01	173.0	-24.7	541-73-1
Benzyl chloride (α-Chlorotoluene)	$C_6H_5CH_2Cl$	126.59	179.3	-39.0	100-44-7
o-Dichlorobenzene (1,2-Dichlorobenzene)	$1,2\text{-}Cl_2C_6H_4$	147.01	180.5	-17.0	95-50-1
p-Dichlorobenzene (1,4-Dichlorobenzene)	$1,4\text{-}Cl_2C_6H_4$	147.01	174.0	53.1	106-46-7
1,2,4-Trichlorobenzene	$1,2,4\text{-}Cl_3C_6H_3$	181.45	213.5	17.0	120-82-1
Hexachlorobutadiene (1,1,2,3,4,4-Hexachloro-1,3-butadiene)					

TABLE 2. ION/ABUNDANCE AND EXPECTED RETENTION TIME FOR SELECTED VOCs ANALYZED BY GC-MS-SIM

Compound	Ion/Abundance (amu/% base peak)	Expected Retention Time (min)
Freon 12 (Dichlorodifluoromethane)	85/100 87/ 31	5.01
Methyl chloride (Chloromethane)	50/100 52/ 34	5.69
Freon 114 (1,2-Dichloro-1,1,2,2-tetrafluoroethane)	85/100 135/ 56 87/ 33	6.55
Vinyl chloride (Chloroethene)	62/100 27/125 64/ 32	6.71
Methyl bromide (Bromomethane)	94/100 96/ 85	7.83
Ethyl chloride (Chloroethane)	64/100 29/140 27/140	8.43
Freon 11 (Trichlorofluoromethane)	101/100 103/ 67	9.97
Vinylidene chloride (1,1-Dichloroethylene)	61/100 96/ 55 63/ 31	10.93
Dichloromethane (Methylene chloride)	49/100 84/ 65 86/ 45	11.21
Freon 113 (1,1,2-Trichloro-1,2,2-trifluoroethane)	151/100 101/140 103/ 90	11.60
1,1-Dichloroethane (Ethylidene dichloride)	63/100 27/ 64 65/ 33	12.50
cis-1,2-Dichloroethylene	61/100 96/ 60 98/ 44	13.40
Chloroform (Trichloromethane)	83/100 85/ 65 47/ 35	13.75
1,2-Dichloroethane (Ethylene dichloride)	62/100 27/ 70 64/ 31	14.39
Methyl chloroform (1,1,1-Trichloroethane)	97/100 99/ 64 61/ 61	14.62
Benzene (Cyclohexatriene)	78/100 77/ 25 50/ 35	15.04
Carbon tetrachloride (Tetrachloromethane)	117/100 119/ 97	15.18

(continued)

TABLE 2. ION/ABUNDANCE AND EXPECTED RETENTION TIME FOR SELECTED VOCs ANALYZED BY GC-MS-SIM (cont.)

Compound	Ion/Abundance (amu/% base peak)	Estimated Retention Time (min)
1,2-Dichloropropane (Propylene dichloride)	63/100 41/ 90 62/ 70	15.83
Trichloroethylene (Trichloroethene)	130/100 132/ 92 95/ 87	16.10
cis-1,3-Dichloropropene	75/100 39/ 70 77/ 30	16.96
trans-1,3-Dichloropropene (1,3 dichloro-1-propene)	75/100 39/ 70 77/ 30	17.49
1,1,2-Trichloroethane (Vinyl trichloride)	97/100 83/ 90 61/ 82	17.61
Toluene (Methyl benzene)	91/100 92/ 57	17.86
1,2-Dibromoethane (Ethylene dibromide)	107/100 109/ 96 27/115	18.48
Tetrachloroethylene (Perchloroethylene)	166/100 164/ 74 131/ 60	19.01
Chlorobenzene (Benzene chloride)	112/100 77/ 62 114/ 32	19.73
Ethylbenzene	91/100 106/ 28	20.20
m,p-Xylene(1,3/1,4-dimethylbenzene)	91/100 106/ 40	20.41
Styrene (Vinyl benzene)	104/100 78/ 60 103/ 49	20.81
1,1,2,2-Tetrachloroethane (Tetrachloroethane)	83/100 85/ 64	20.92
o-Xylene (1,2-Dimethylbenzene)	91/100 106/ 40	20.92
4-Ethyltoluene	105/100 120/ 29	22.53
1,3,5-Trimethylbenzene (Mesitylene)	105/100 120/ 42	22.65
1,2,4-Trimethylbenzene (Pseudocumene)	105/100 120/ 42	23.18
m-Dichlorobenzene (1,3-Dichlorobenzene)	146/100 148/ 65 111/ 40	23.31

(continued)

TABLE 2. ION/ABUNDANCE AND EXPECTED RETENTION TIME FOR SELECTED VOCs ANALYZED BY GC-MS-SIM (cont.)

Compound	Ion/Abundance (amu/% base peak)	Expected Retention Time (min)
Benzyl chloride (α-Chlorotoluene)	91/100 126/ 26	23.32
p-Dichlorobenzene (1,4-Dichlorobenzene)	146/100 148/ 65 111/ 40	23.41
o-Dichlorobenzene (1,2-Dichlorobenzene)	146/100 148/ 65 111/ 40	23.88
1,2,4-Trichlorobenzene	180/100 182/ 98 184/ 30	26.71
Hexachlorobutadiene (1,1,2,3,4,4 Hexachloro-1,3-butadiene)	225/100 227/ 66 223/ 60	27.68

TABLE 3. GENERAL GC AND MS OPERATING CONDITIONS

Chromatography	
Column	Hewlett-Packard OV-1 crosslinked methyl silicone (50 m x 0.31-mm I.D., 17 um film thickness), or equivalent
Carrier Gas	Helium (2.0 cm^3/min at 250°C)
Injection Volume	Constant (1-3 uL)
Injection Mode	Splitless
Temperature Program	
Initial Column Temperature	-50°C
Initial Hold Time	2 min
Program	8°C/min to 150°C
Final Hold Time	15 min
Mass Spectrometer	
Mass Range	18 to 250 amu
Scan Time	1 sec/scan
EI Condition	70 eV
Mass Scan	Follow manufacturer's instruction for selecting mass selective detector (MS) and selected ion monitoring (SIM) mode
Detector Mode	Multiple ion detection
FID System (Optional)	
Hydrogen Flow	30 cm^3/minute
Carrier Flow	30 cm^3/minute
Burner Air	400 cm^3/minute

TABLE 4. 4-BROMOFLUOROBENZENE KEY IONS AND ION ABUNDANCE CRITERIA

Mass	Ion Abundance Criteria
50	15 to 40% of mass 95
75	30 to 60% of mass 95
95	Base Peak, 100% Relative Abundance
96	5 to 9% of mass 95
173	<2% of mass 174
174	>50% of mass 95
175	5 to 9% of mass 174
176	>95% but< 101% of mass 174
177	5 to 9% of mass 176

TABLE 5. RESPONSE FACTORS (ppbv/area count) AND EXPECTED RETENTION TIME FOR GC-MS-SIM ANALYTICAL CONFIGURATION

Compounds	Response Factor (ppbv/area count)	Expected Retention Time (minutes)
Freon 12	0.6705	5.01
Methyl chloride	4.093	5.64
Freon 114	0.4928	6.55
Vinyl chloride	2.343	6.71
Methyl bromide	2.647	7.83
Ethyl chloride	2.954	8.43
Freon 11	0.5145	9.87
Vinylidene chloride	1.037	10.93
Dichloromethane	2.255	11.21
Trichlorotrifluoroethane	0.9031	11.60
1,1-Dichloroethane	1.273	12.50
cis-1,2-Dichloroethylene	1.363	13.40
Chloroform	0.7911	13.75
1,2-Dichloroethane	1.017	14.39
Methyl chloroform	0.7078	14.62
Benzene	1.236	15.04
Carbon tetrachloride	0.5880	15.18
1,2-Dichloropropane	2.400	15.83
Trichloroethylene	1.383	16.10
cis-1,3-Dichloropropene	1.877	16.96
trans-1,3-Dichloropropene	1.338	17.49
1,1,2-Trichloroethane	1.891	17.61
Toluene	0.9406	17.86
1,2-Dibromoethane (EDB)	0.8662	18.48
Tetrachloroethylene	0.7357	19.01
Chlorobenzene	0.8558	19.73
Ethylbenzene	0.6243	20.20
m,p-Xylene	0.7367	20.41
Styrene	1.888	20.80
1,1,2,2-Tetrachloroethane	1.035	20.92
o-Xylene	0.7498	20.92
4-Ethyltoluene	0.6181	22.53
1,3,5-Trimethylbenzene	0.7088	22.65
1,2,4-Trimethylbenzene	0.7536	23.18
m-Dichlorobenzene	0.9643	23.31
Benzyl chloride	1.420	23.32
p-Dichlorobenzene	0.8912	23.41
o-Dichlorobenzene	1.004	23.88
1,2,4-Trichlorobenzene	2.150	26.71
Hexachlorobutadiene	0.4117	27.68

TABLE 6. GC-MS-SIM CALIBRATION TABLE

*** External Standard ***

Operator: JDP 8 Jan 87 10:02 am
Sample Info : SYR 1
Misc Info:
Integration File Name : DATA:SYR2A02A.I
Sequence Index: 1 Bottle Number : 2

Last Update: 8 Jan 87 8:13 am
Reference Peak Window: 5.00 Absolute Minutes
Non-Reference Peak Window: 0.40 Absolute Minutes
Sample Amount: 0.000 Uncalibrated Peak RF: 0.000 Multiplier: 1.667

Peak Num	Type	Int Type	Ret Time	Signal Description			Compound Name	Area	Amount	
1		1	PP	5.020	Mass	85.00	amu	FREON 12	12893	4011 pptv	
2		1	PP	5.654	Mass	50.00	amu	METHYLCHLORI	4445	2586 pptv	
3		1	BP	6.525	Mass	85.00	amu	FREON 114	7067	1215 pptv	
4		1	PB	6.650	Mass	62.00	amu	VINYLCHLORID	2892	1929 pptv	*
5		1	BP	7.818	Mass	94.00	amu	METHYLBROMID	2401	1729 pptv	
6		1	BB	8.421	Mass	64.00	amu	ETHYLCHLORID	2134	2769 pptv	*
7		1	BV	9.940	Mass	101.00	amu	FREON 11	25069	6460 pptv	
8		1	BP	10.869	Mass	61.00	amu	VINDENECHLOR	5034	1700 pptv	
9		1	BP	11.187	Mass	49.00	amu	DICHLOROMETH	4803	2348 pptv	
10		1	PP	11.225	Mass	41.00	amu	ALLYLCHLORID	761	8247 pptv	*
11		1	BP	11.578	Mass	151.00	amu	3CHL3FLUETHA	5477	1672 pptv	
12		1	BP	12.492	Mass	63.00	amu	1,1DICHLOETH	5052	1738 pptv	*
13		1	VP	13.394	Mass	61.00	amu	c-1,2DICHLET	4761	1970 pptv	
14		1	PH	13.713	Mass	83.00	amu	CHLOROFORM	5327	1678 pptv	
15		1	BP	14.378	Mass	62.00	amu	1,2DICHLETHA	5009	2263 pptv	
16		1	PB	14.594	Mass	97.00	amu	METHCHLOROFO	6656	2334 pptv	
17		1	VP	15.009	Mass	78.00	amu	BENZENE	8352	2167 pptv	
18		1.	VP	15.154	Mass	117.00	amu	CARBONTETRAC	5888	1915 pptv	
19		1	BB	15.821	Mass	63.00	amu	1,2DICHLPROP	3283	1799 pptv	*
20		1	BB	16.067	Mass	130.00	amu	TRICHLETHENE	4386	2109 pptv	
21		1	PB	16.941	Mass	75.00	amu	c-1,3DICHLPR	2228	987.3 pptv	
22		1	BP	17.475	Mass	75.00	amu	t-1,3DICHLPR	1626	689.2 pptv	
23		1	BB	17.594	Mass	97.00	amu	1,1,2CHLETHA	2721	1772 pptv	
24		1	BV	17.844	Mass	91.00	amu	TOLUENE	14417	2733 pptv	
25		1	PB	18.463	Mass	107.00	amu	EDB	4070	1365 pptv	*
26		1	PH	18.989	Mass	166.00	amu	TETRACHLETHE	6874	2065 pptv	
27		1	PB	19.705	Mass	112.00	amu	CHLOROBENZEN	5648	1524 pptv	
28		1	BP	20.168	Mass	91.00	amu	ETHYLBENZENE	11084	1842 pptv	
29		1	PB	20.372	Mass	91.00	amu	m,p-XYLENE	17989	3790 pptv	
30		1	BV	20.778	Mass	104.00	amu	STYRENE	3145	1695 pptv	
31		1	BH	20.887	Mass	83.00	amu	TETRACHLETHA	4531	1376 pptv	
32		1	BP	20.892	Mass	91.00	amu	o-XYLENE	9798	2010 pptv	
33		1	VV	22.488	Mass	105.00	amu	4-ETHYLTOLUE	7694	1481 pptv	
34		1	VB	22.609	Mass	105.00	amu	1,3,5METHBEN	6781	1705 pptv	
35		1	BB	23.144	Mass	105.00	amu	1,2,4METHBEN	7892	2095 pptv	
36		1	BV	23.273	Mass	146.00	amu	m-DICHLBENZE	3046	1119 pptv	
37		1	VV	23.279	Mass	91.00	amu	BENZYLCHLORI	3880	1006 pptv	
38		1	VB	23.378	Mass	146.00	amu	p-DICHLBENZE	6090	2164 pptv	
39		1	BP	23.850	Mass	146.00	amu	o-DICHLBENZE	2896	1249 pptv	
40		1	BB	26.673	Mass	180.00	amu	1,2,4CHLBENZ	562	767.1 pptv	
41		1	BB	27.637	Mass	225.00	amu	HEXACHLBUTAD	6309	1789 pptv	

TABLE 7. TYPICAL RETENTION TIME (MIN) AND CALIBRATION RESPONSE FACTORS (ppbv/area count) FOR TARGETED VOCs ASSOCIATED WITH FID AND ECD ANALYTICAL SYSTEM

Peak Number[1]	Compound	Retention Time (RT), minutes	FID Response Factor (RF) (ppbv/area count)	ECD Response Factor (ppbv/area count x 10^{-5})
1	Freon 12	3.65	3.465	13.89
2	Methyl chloride	4.30	0.693	
3	Freon 114	5.13	0.578	22.32
4	Vinyl chloride	5.28	0.406	
5	Methyl bromide	6.44		26.34
6	Ethyl chloride	7.06	0.413	
7	Freon 11	8.60	6.367	1.367
8	Vinylidene chloride	9.51	0.347	
9	Dichloromethane	9.84	0.903	
10	Trichlorotrifluoroethane	10.22	0.374	3.955
11	1,1-Dichloroethane	11.10	0.359	
12	cis-1,2-Dichloroethylene	11.99	0.368	
13	Chloroform	12.30	1.059	11.14
14	1,2-Dichloroethane	12.92	0.409	
15	Methyl chloroform	13.12	0.325	3.258
16	Benzene	13.51	0.117	
17	Carbon tetrachloride	13.64	1.451	1.077
18	1,2-Dichloropropane	14.26	0.214	
19	Trichloroethylene	14.50	0.327	8.910
20	cis-1,3-Dichloropropene	15.31		
21	trans-1,3-Dichloropropene	15.83		
22	1,1,2-Trichloroethane	15.93	0.336	
23	Toluene	16.17	0.092	
24	1,2-Dibromoethane (EDB)	16.78	0.366	5.137
25	Tetrachloroethylene	17.31	0.324	1.449
26	Chlorobenzene	18.03	0.120	
27	Ethylbenzene	18.51	0.092	
28	m,p-Xylene	18.72	0.095	
29	Styrene	19.12	0.143	
30	1,1,2,2-Tetrachloroethane	19.20		9.856
31	o-Xylene	19.23		
32	4-Ethyltoluene	20.82	0.100	
33	1,3,5-Trimethylbenzene	20.94	0.109	
34	1,2,4-Trimethylbenzene	21.46	0.111	
35	m-Dichlorobenzene	21.50		
36	Benzyl chloride	21.56		
37	p-Dichlorobenzene	21.67	0.188	
38	o-Dichlorobenzene	22.12	0.188	
39	1,2,4-Trichlorobenzene	24.88	0.667	
40	Hexachlorobutadiene	25.82	0.305	1.055

[1] Refer to Figures 15 and 16 for peak location

TABLE 8. TYPICAL RETENTION TIME (minutes) FOR SELECTED ORGANICS USING GC-FID-ECD-PID* ANALYTICAL SYSTEM

Compound	Retention Time (minutes)		
	FID	ECD	PID
Acetylene	2.984	--	--
1,3-Butadiene	3.599	--	3.594
Vinyl chloride	3.790	--	3.781
Chloromethane	5.137	--	--
Chloroethane	5.738	--	--
Bromoethane	8.154	--	--
Methylene Chloride	9.232	--	9.218
trans-1,2-Dichloroethylene	10.077	--	10.065
1,1-Dichloroethane	11.190	--	--
Chloroprene	11.502	--	11.491
Perfluorobenzene	13.077	13.078	13.069
Bromochloromethane	13.397	13.396	13.403
Chloroform	13.768	13.767	13.771
1,1,1-Trichloroethane	14.151	14.153	14.158
Carbon Tetrachloride	14.642	14.667	14.686
Benzene/1,2-Dichloroethane	15.128	--	15.114
Perfluorotoluene	15.420	15.425	15.412
Trichloroethylene	17.022	17.024	17.014
1,2-Dichloropropene	17.491	17.805	17.522
Bromodichloromethane	18.369	--	--
trans-1,3-Dichloropropylene	19.694	19.693	19.688
Toluene	20.658	--	20.653
cis-1,3-Dichloropropylene	21.461	21.357	21.357
1,1,2-Trichloroethane	21.823	--	--
Tetrachloroethylene	22.340	22.346	22.335
Dibromochloromethane	22.955	22.959	22.952
Chlorobenzene	24.866	--	24.861
m/p-Xylene	25.763	--	25.757
Styrene/o-Xylene	27.036	--	27.030
Bromofluorobenzene	28.665	28.663	28.660
1,1,2,2-Tetrachloroethane	29.225	29.227	29.228
m-Dichlorobenzene	32.347	32.345	32.342
p-Dichlorobenzene	32.671	32.669	32.666
o-Dichlorobenzene	33.885	33.883	33.880

* Varian® 3700 GC equipped with J & W Megabore® DB 624 Capillary Column (30 m X 0.53 I.D. mm) using helium carrier gas.

TABLE 9. GC-MS-SIM CALIBRATION TABLE

Last Update: 18 Dec 86 7:54 am
Reference Peak Window: 5.00 Absolute Minutes
Non-Reference Peak Window: 0.40 Absolute Minutes
Sample Amount: 0.000 Uncalibrated Peak RF: 0.000 Multiplier: 1.000

Ret Time	Pk#	Signal	Descr		Amt pptv	Lvl	[Area]	Pk-Type	Partial Name
5.008	1	Mass	85.00	amu	13620	1	72974	1	FREON 12
5.690	2	Mass	50.00	amu	12720	1	36447	1	METHYLCHLORID
6.552	3	Mass	85.00	amu	8380	1	81251	1	FREON 114
6.709	4	Mass	62.00	amu	8050	1	20118	1	VINYLCHLORIDE
7.831	5	Mass	94.00	amu	12210	1	28265	1	METHYLBROMIDE
8.431	6	Mass	64.00	amu	12574	1	16149	1	ETHYLCHLORIDE
9.970	7	Mass	101.00	amu	12380	1	80088	1	FREON 11
10.927	8	Mass	61.00	amu	7890	1	38954	1	VINDENECHLORI
11.209	9	Mass	49.00	amu	12760	1	43507	1	DICHLOROMETHA
11.331	10	Mass	41.00	amu	12650	1	1945	1	ALLYLCHLORIDE
11.595	11	Mass	151.00	amu	7420	1	40530	1	3CHL3FLUETHAN
12.502	12	Mass	63.00	amu	12710	1	61595	1	1,1DICHLOETHA
13.403	13	Mass	61.00	amu	12630	1	50900	1	c-1,2DICHLETH
13.747	14	Mass	83.00	amu	7670	1	40585	1	CHLOROFORM
14.387	15	Mass	62.00	amu	9040	1	33356	1	1,2DICHLETHAN
14.623	16	Mass	97.00	amu	8100	1	38503	1	METHCHLOROFOR
15.038	17	Mass	78.00	amu	10760	1	69119	1	BENZENE
15.183	18	Mass	117.00	amu	8340	1	42737	1	CARBONTETRACH
15.829	19	Mass	63.00	amu	12780	1	38875	1	1,2DICHLPROPA
16.096	20	Mass	130.00	amu	8750	1	30331	1	TRICHLETHENE
16.956	21	Mass	75.00	amu	4540	1	17078	1	c-1,3DICHLPRO
17.492	22	Mass	75.00	amu	3380	1	13294	1	t-1,3DICHLPRO
17.610	23	Mass	97.00	amu	12690	1	32480	1	1,1,2CHLETHAN
17.862	24	Mass	91.00	amu	10010	1	88036	1	TOLUENE
18.485	25	Mass	107.00	amu	6710	1	33350	1	EDB
19.012	26	Mass	166.00	amu	7830	1	43454	1	TETRACHLETHEN
19.729	27	Mass	112.00	amu	7160	1	44224	1	CHLOROBENZENE
20.195	28	Mass	91.00	amu	12740	1	127767	1	ETHYLBENZENE
20.407	29	Mass	91.00	amu	25400	1	200973	1	m,p-XYLENE
20.806	30	Mass	104.00	amu	12390	1	38332	1	STYRENE
20.916	31	Mass	83.00	amu	11690	1	64162	1	TETRACHLETHAN
20.921	32	Mass	91.00	amu	11085	1	90096	1	o-XYLENE
22.528	33	Mass	105.00	amu	12560	1	108747	1	4-ETHYLTOLUEN
22.648	34	Mass	105.00	amu	12620	1	83666	1	1,3,5METHBENZ
23.179	35	Mass	105.00	amu	12710	1	79833	1	1,2,4METHBENZ
23.307	36	Mass	146.00	amu	12650	1	57409	1	m-DICHLBENZEN
23.317	37	Mass	91.00	amu	7900	1	50774	1	BENZYLCHLORID
23.413	38	Mass	146.00	amu	12390	1	58127	1	p-DICHLBENZEN
23.885	39	Mass	146.00	amu	13510	1	52233	1	o-DICHLBENZEN
26.714	40	Mass	180.00	amu	15520	1	18967	1	1,2,4CHLBENZE
27.680	41	Mass	225.00	amu	7470	1	43920	1	HEXACHLBUTADI

TABLE 10. EXAMPLE OF HARD-COPY OF GC-MS-SIM ANALYSIS

Data file: DATA:SYR2A02A.D
File type: GC / MS DATA FILE

Name Info: SYR 1
Misc Info:
Operator : JDP

Date : 8 Jan 87 10:02 am
Instrment: MS_5970
Inlet : GC

Sequence index : 1
Als bottle num : 2
Replicate num : 1

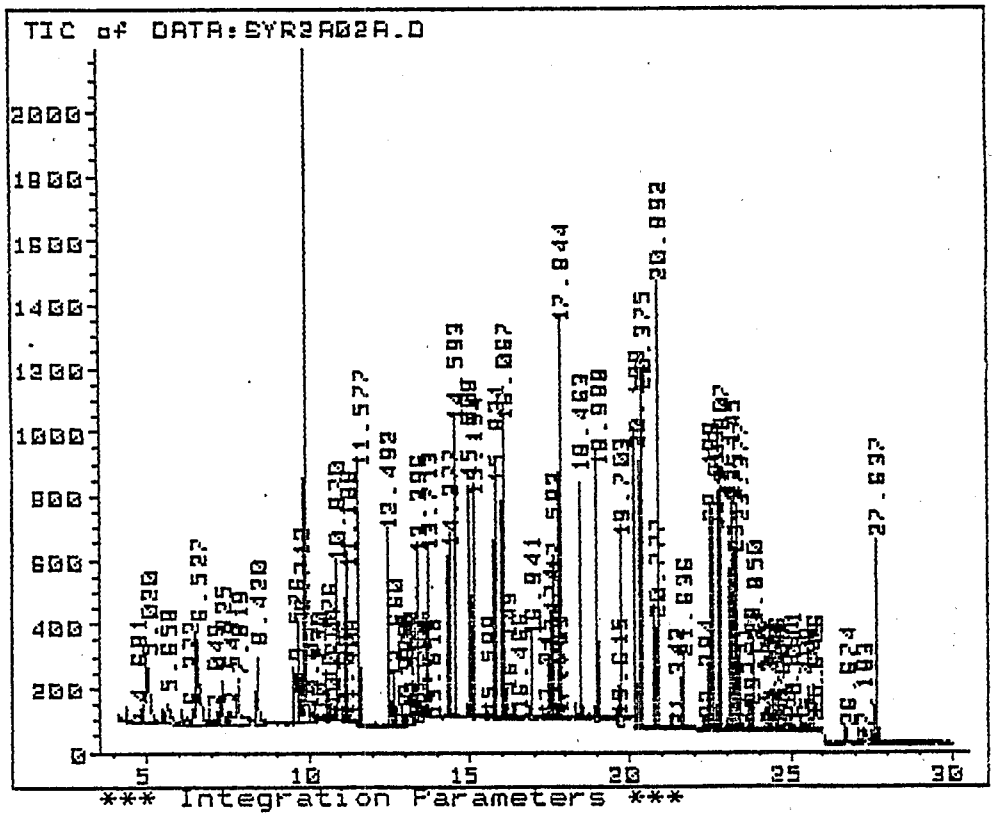

*** Integration Parameters ***

FALSE : Shoulder Detection Enabled
0.020 : Expected Peak Width (Min)
11 : Initial Peak Detection Threshold

4.000	THRESHOLD	5.000
4.000	PEAK_WIDTH	0.200
9.800	PEAK_WIDTH	0.060

TABLE 10. EXAMPLE OF HARD-COPY OF GC-MS-SIM ANALYSIS (cont.)

Operator: JDP 8 Jan 87 10:0[illegible] am
Sample Info : SYR 1
Misc Info:
Integration File Name : DATA:SYR2A02A.I
Sequence Index: 1 Bottle Number : 2

Last Update: 8 Jan 87 8:13 am
Reference Peak Window: 5.00 Absolute Minutes
Non-Reference Peak Window: 0.40 Absolute Minutes
Sample Amount: 0.000 Uncalibrated Peak RF: 0.000 Multiplier: 1.667

Peak Num	Peak Type	Int Type	Ret Time	Signal Description			Compound Name	Area	Amount	
1		1	PP	5.020	Mass	85.00 amu	FREON 12	12893	4011 pptv	
2		1	PP	5.654	Mass	50.00 amu	METHYLCHLORI	4445	2586 pptv	
3		1	BP	6.525	Mass	85.00 amu	FREON 114	7067	1215 pptv	
4		1	PB	6.650	Mass	62.00 amu	VINYLCHLORID	2892	1929 pptv	*
5		1	BP	7.818	Mass	94.00 amu	METHYLBROMID	2401	1729 pptv	
6		1	BB	8.421	Mass	64.00 amu	ETHYLCHLORID	2134	2769 pptv	*
7		1	BV	9.940	Mass	101.00 amu	FREON 11	25069	6460 pptv	
8		1	BP	10.869	Mass	61.00 amu	VINDENECHLOR	5034	1700 pptv	
9		1	BP	11.187	Mass	49.00 amu	DICHLOROMETH	4803	2348 pptv	
10		1	PP	11.225	Mass	41.00 amu	ALLYLCHLORID	761	8247 pptv	*
11		1	BP	11.578	Mass	151.00 amu	3CHL3FLUETHA	5477	1672 pptv	
12		1	BP	12.492	Mass	63.00 amu	1,1DICHLOETH	5052	1738 pptv	*
13		1	VP	13.394	Mass	61.00 amu	c-1,2DICHLET	4761	1970 pptv	
14		1	PH	13.713	Mass	83.00 amu	CHLOROFORM	5327	1678 pptv	
15		1	BP	14.378	Mass	62.00 amu	1,2DICHLETHA	5009	2263 pptv	
16		1	PB	14.594	Mass	97.00 amu	METHCHLOROFO	6656	2334 pptv	
17		1	VP	15.009	Mass	78.00 amu	BENZENE	8352	2167 pptv	
18		1	VP	15.154	Mass	117.00 amu	CARBONTETRAC	5888	1915 pptv	
19		1	BB	15.821	Mass	63.00 amu	1,2DICHLPROP	3283	1799 pptv	*
20		1	BB	16.067	Mass	130.00 amu	TRICHLETHENE	4386	2109 pptv	
21		1	PB	16.941	Mass	75.00 amu	c-1,3DICHLPR	2228	987.3 pptv	
22		1	BP	17.475	Mass	75.00 amu	t-1,3DICHLPR	1626	689.2 pptv	
23		1	BB	17.594	Mass	97.00 amu	1,1,2CHLETHA	2721	1772 pptv	
24		1	BV	17.844	Mass	91.00 amu	TOLUENE	14417	2733 pptv	
25		1	PB	18.463	Mass	107.00 amu	EDB	4070	1365 pptv	*
26		1	PH	18.989	Mass	166.00 amu	TETRACHLETHE	6874	2065 pptv	
27		1	PB	19.705	Mass	112.00 amu	CHLOROBENZEN	5648	1524 pptv	
28		1	BP	20.168	Mass	91.00 amu	ETHYLBENZENE	11084	1842 pptv	
29		1	PB	20.372	Mass	91.00 amu	m,p-XYLENE	17989	3790 pptv	
30		1	BV	20.778	Mass	104.00 amu	STYRENE	3145	1695 pptv	
31		1	BH	20.887	Mass	83.00 amu	TETRACHLETHA	4531	1376 pptv	
32		1	BP	20.892	Mass	91.00 amu	o-XYLENE	9798	2010 pptv	
33		1	VV	22.488	Mass	105.00 amu	4-ETHYLTOLUE	7694	1481 pptv	
34		1	VB	22.609	Mass	105.00 amu	1,3,5METHBEN	6781	1705 pptv	
35		1	BB	23.144	Mass	105.00 amu	1,2,4METHBEN	7892	2095 pptv	
36		1	BV	23.273	Mass	146.00 amu	m-DICHLBENZE	3046	1119 pptv	
37		1	VV	23.279	Mass	91.00 amu	BENZYLCHLORI	3880	1006 pptv	
38		1	VB	23.378	Mass	146.00 amu	p-DICHLBENZE	6090	2164 pptv	
39		1	BP	23.850	Mass	146.00 amu	o-DICHLBENZE	2896	1249 pptv	
40		1	BB	26.673	Mass	180.00 amu	1,2,4CHLBENZ	562	767.1 pptv	
41		1	BB	27.637	Mass	225.00 amu	HEXACHLBUTAD	6309	1789 pptv	

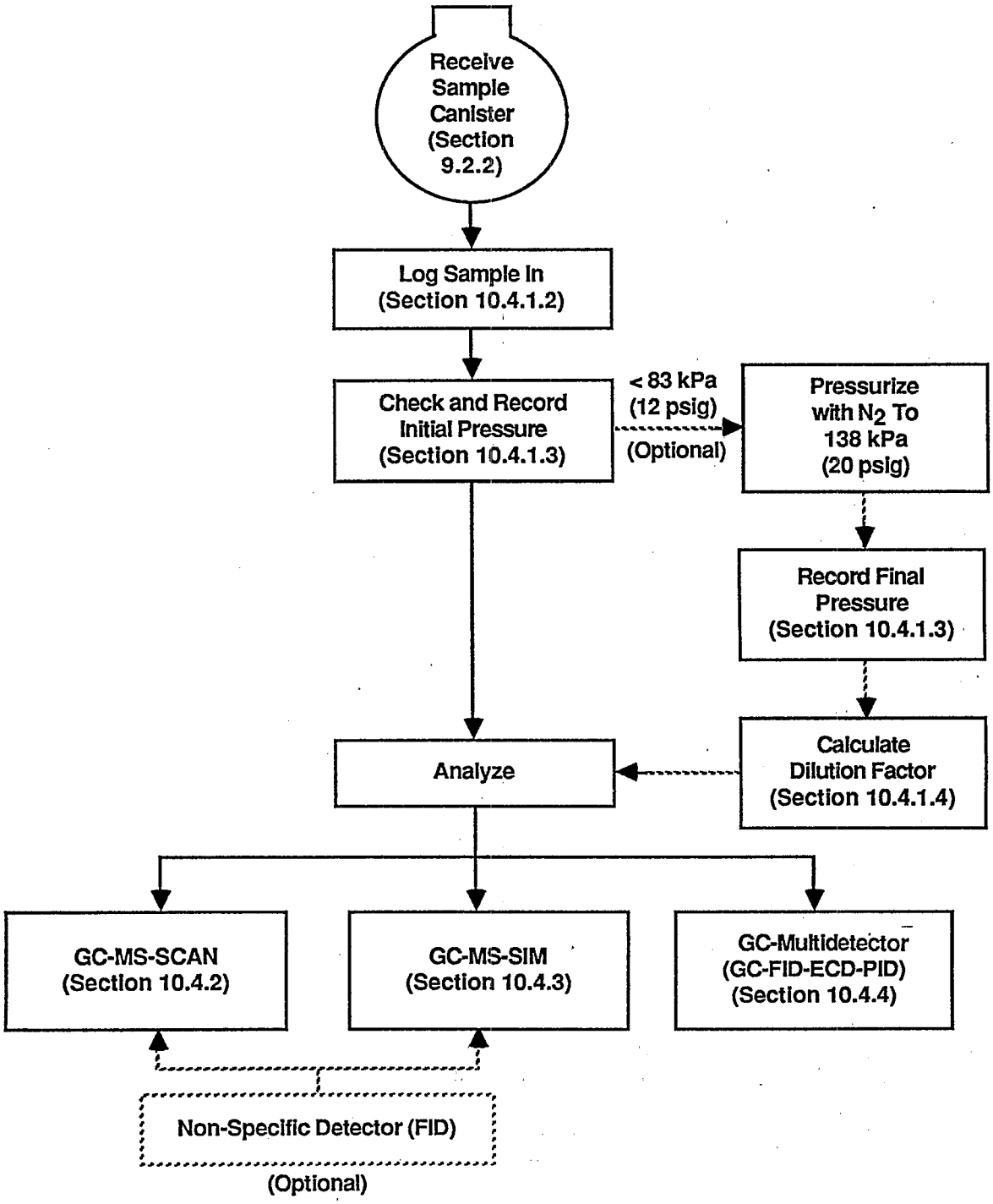

FIGURE 1. ANALYTICAL SYSTEMS AVAILABLE FOR CANISTER VOC IDENTIFICATION AND QUANTITATION

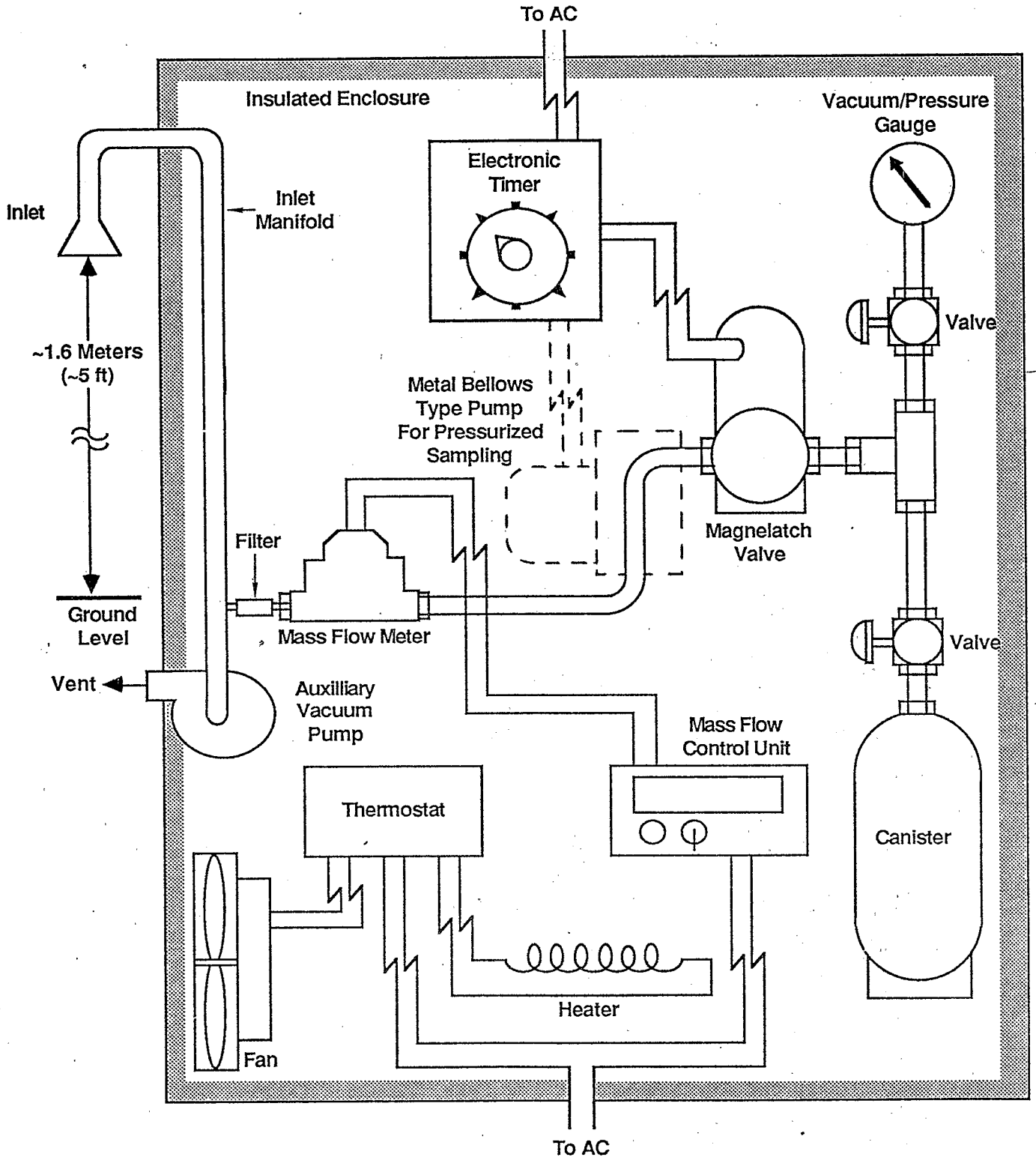

FIGURE 2. SAMPLER CONFIGURATION FOR SUBATMOSPHERIC PRESSURE OR PRESSURIZED CANISTER SAMPLING

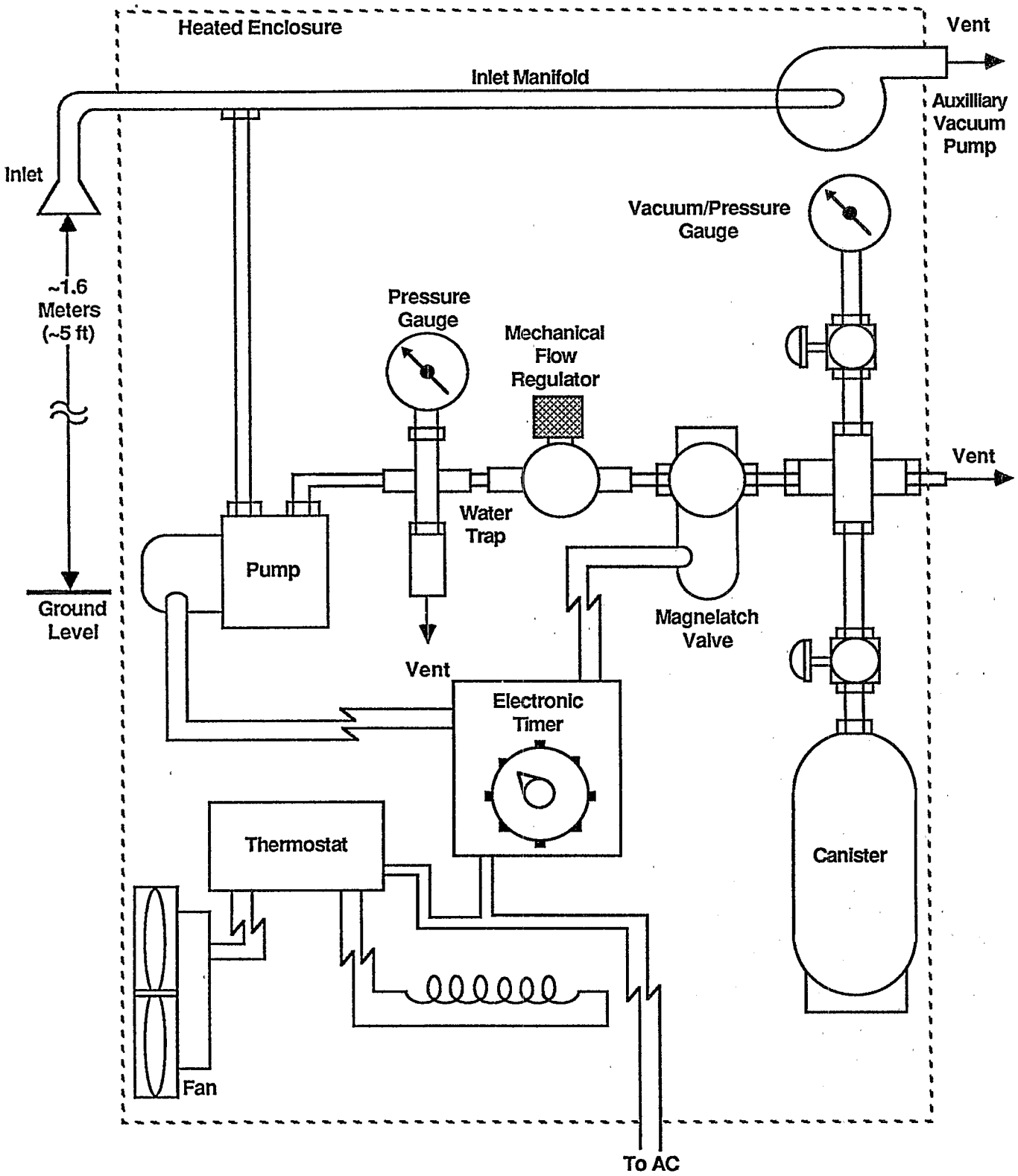

FIGURE 3. ALTERNATIVE SAMPLER CONFIGURATION FOR PRESSURIZED CANISTER SAMPLING

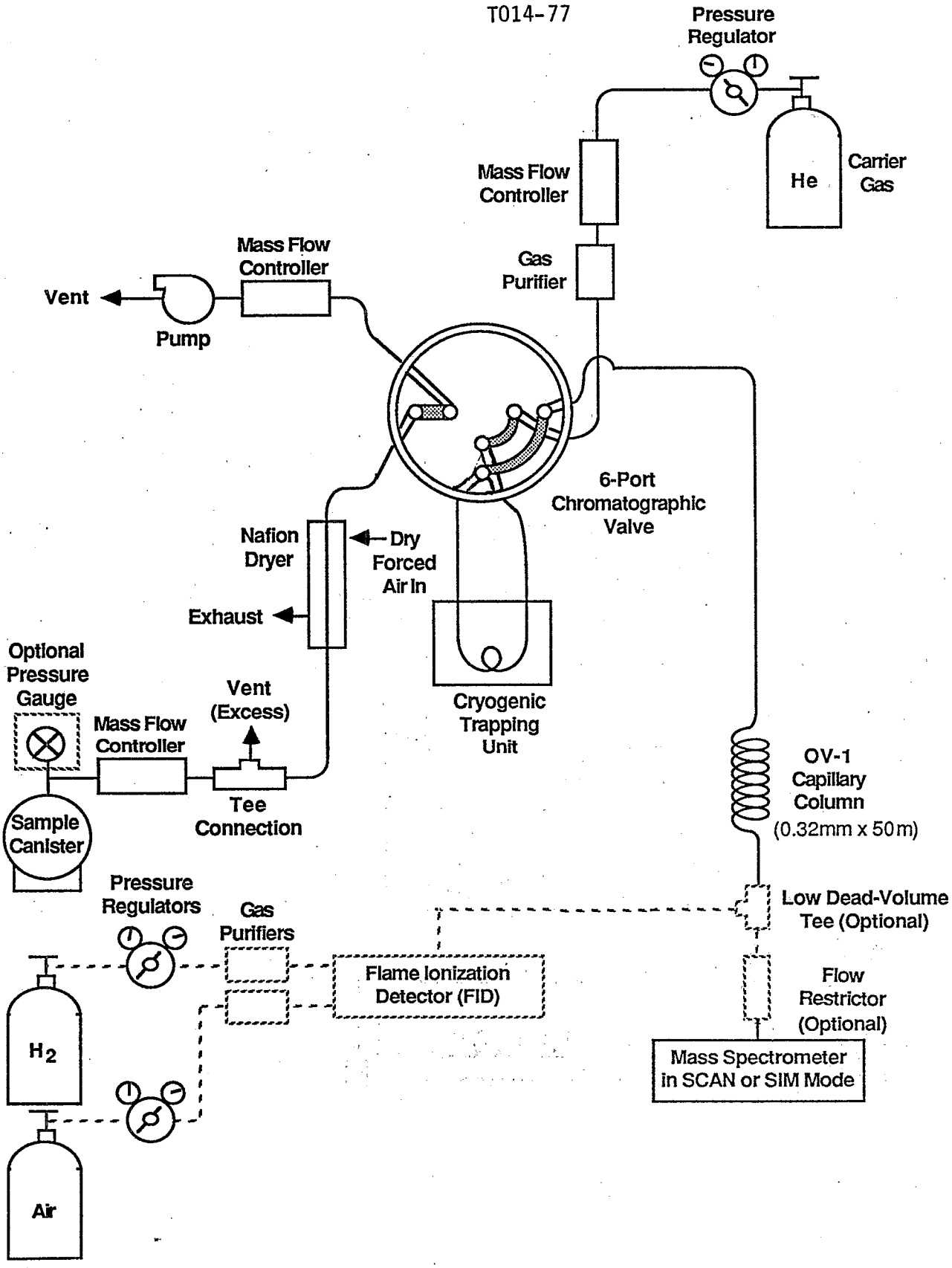

FIGURE 4. CANISTER ANALYSIS UTILIZING GC-MS-SCAN-SIM ANALYTICAL SYSTEM WITH OPTIONAL FLAME IONIZATION DETECTOR WITH THE 6-PORT CHROMATOGRAPHIC VALVE IN THE SAMPLE DESORPTION MODE

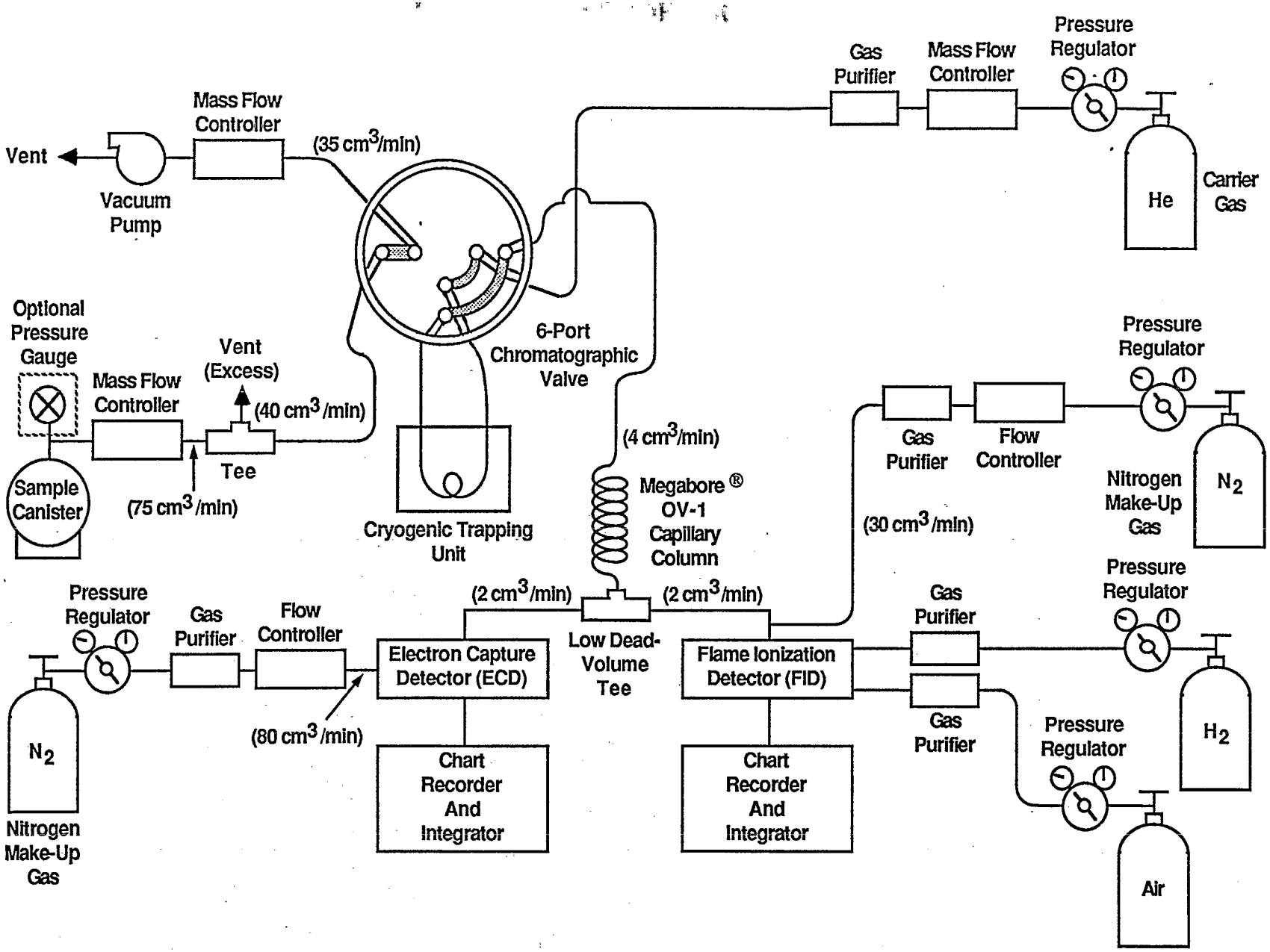

T014-78

FIGURE 5. GC-FID-ECD ANALYTICAL SYSTEM WITH THE 6-PORT CHROMATOGRAPHIC VALVE IN THE SAMPLE DESORPTION MODE

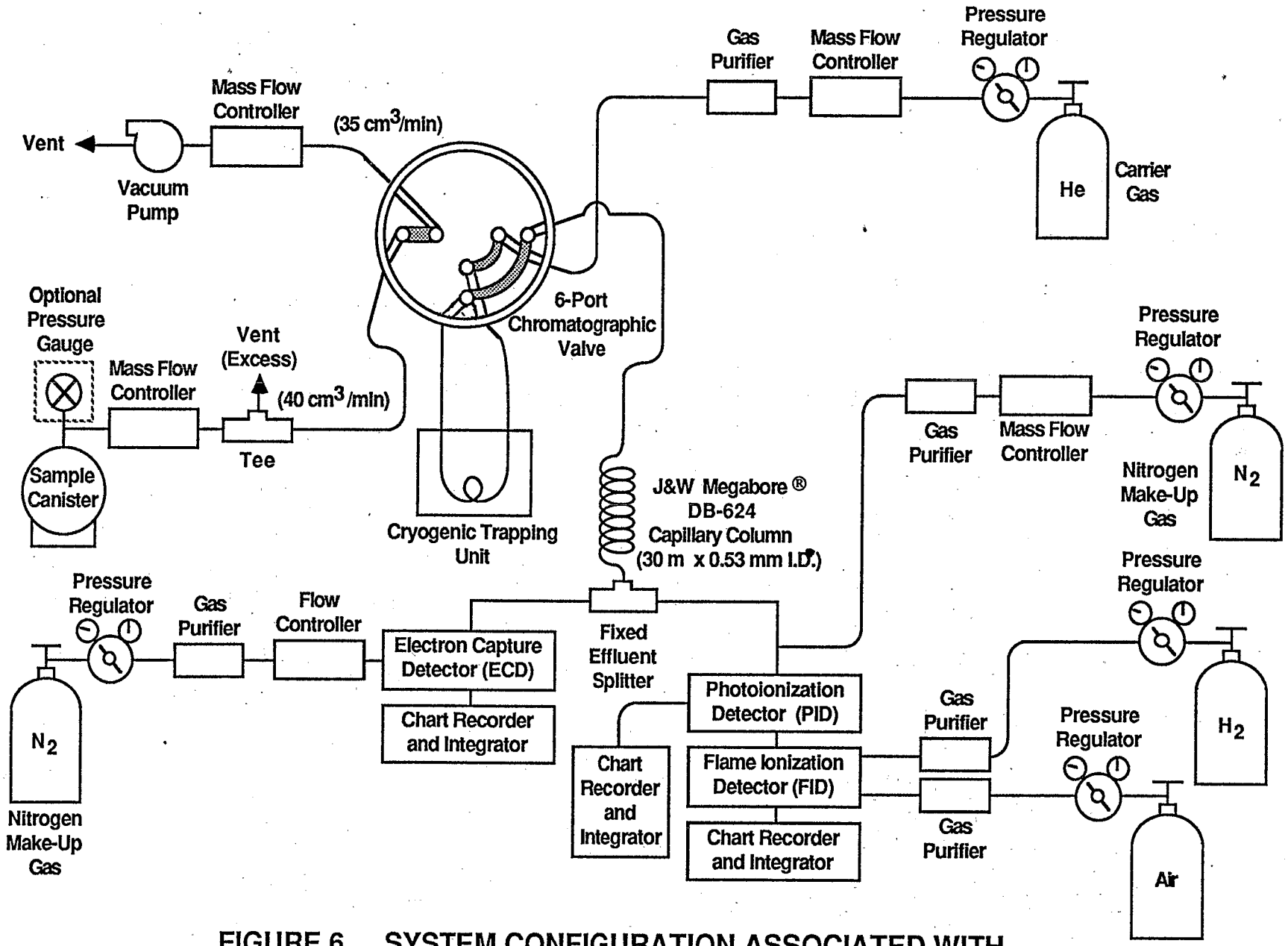

FIGURE 6. SYSTEM CONFIGURATION ASSOCIATED WITH THE GC-FID-ECD-PID ANALYTICAL SYSTEM WITH THE 6-PORT CHROMATOGRAPHIC VALVE IN THE SAMPLE DESORPTION MODE

T014-79

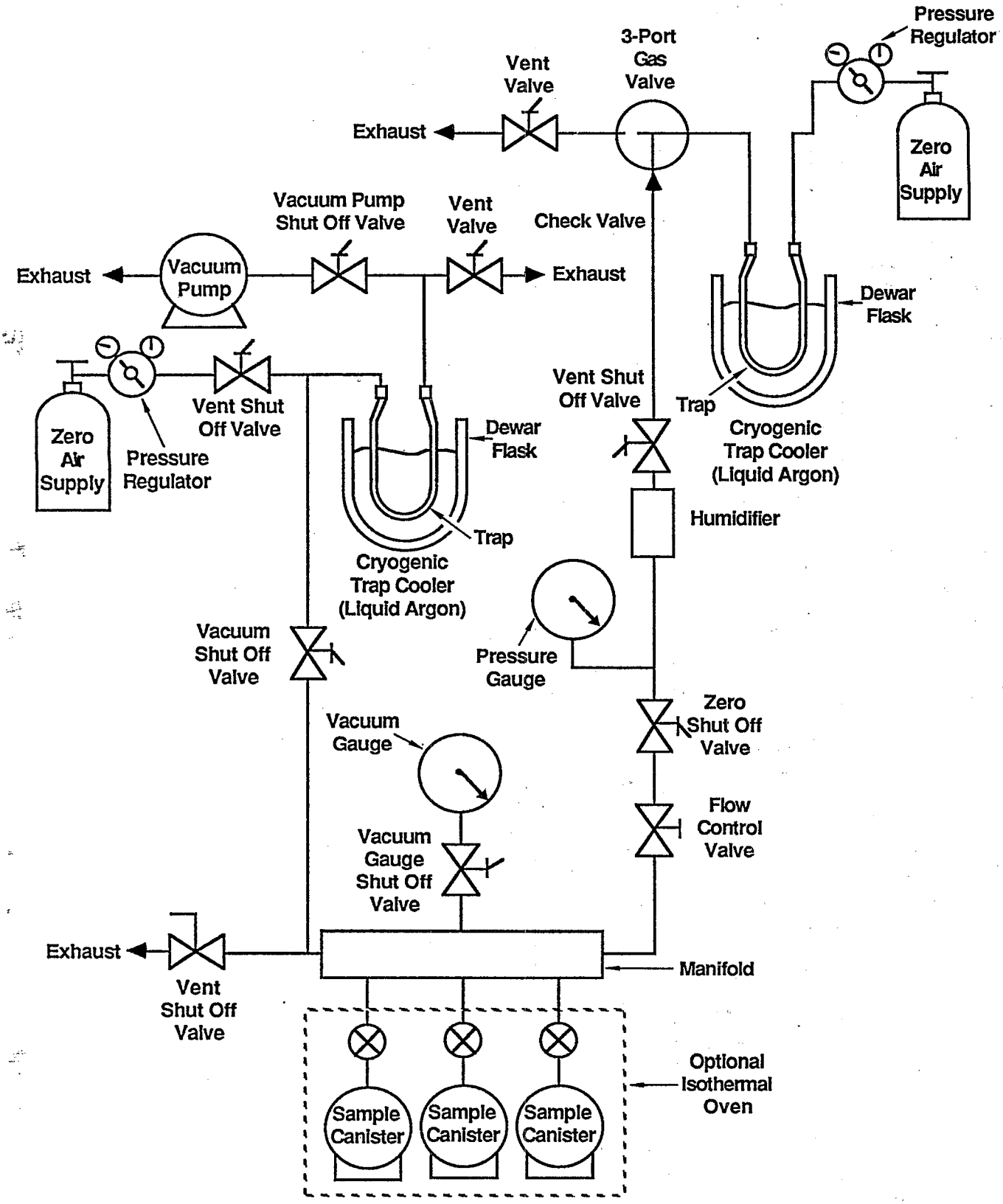

FIGURE 7. CANISTER CLEANING SYSTEM

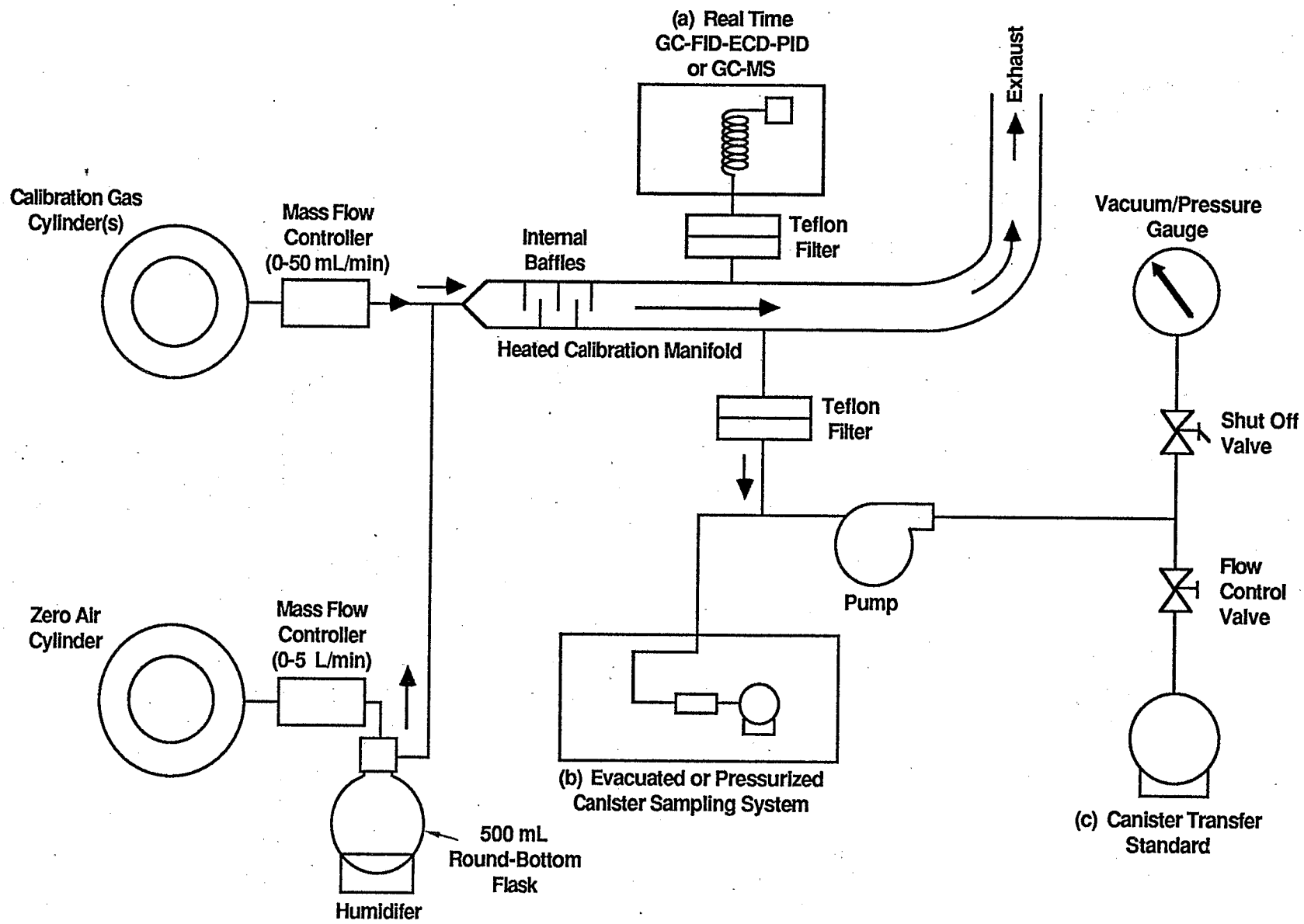

FIGURE 8. SCHEMATIC OF CALIBRATION SYSTEM AND MANIFOLD FOR (a) ANALYTICAL SYSTEM CALIBRATION, (b) TESTING CANISTER SAMPLING SYSTEM AND (c) PREPARING CANISTER TRANSFER STANDARDS.

T014-81

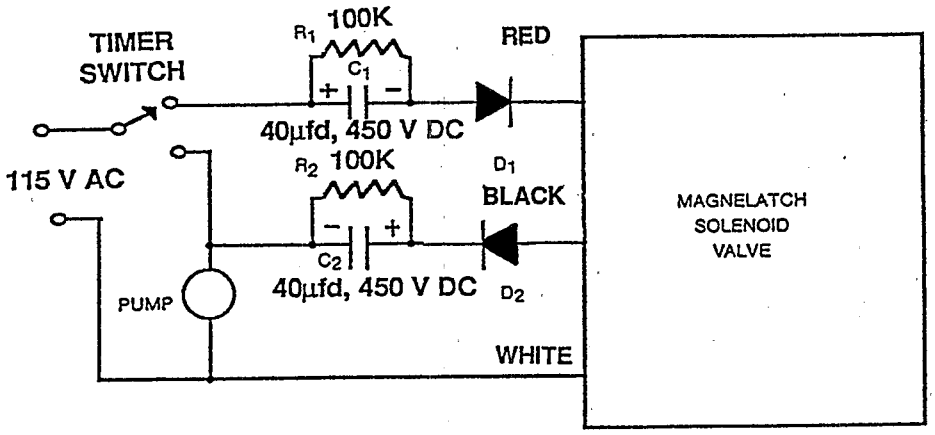

COMPONENTS
Capacitor C_1 and C_2 - 40 uf, 450 VDC (Sprague Atom® TVA 1712 or equivalent)
Resister R_1 and R_2 - 0.5 watt, 5% tolerance
Diode D_1 and D_2 - 1000 PRV, 2.5 A (RCA, SK 3081 or equivalent)

(a). Simple Circuit For Operating Magnelatch Valve

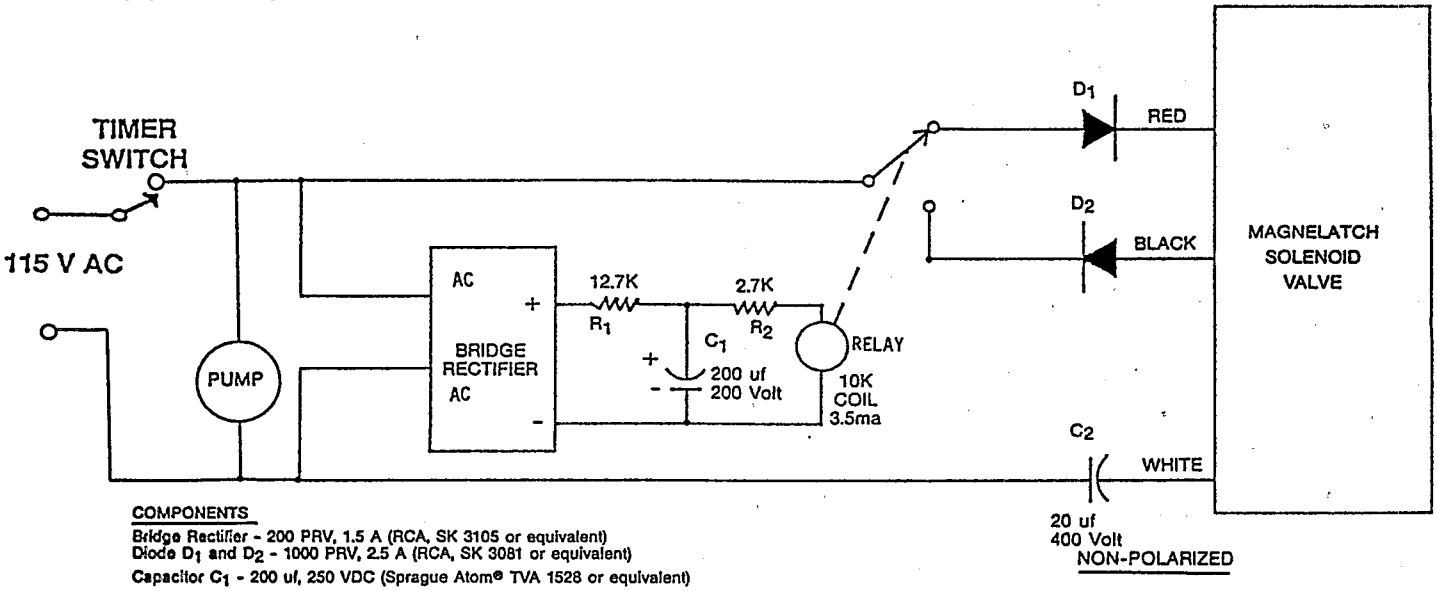

COMPONENTS
Bridge Rectifier - 200 PRV, 1.5 A (RCA, SK 3105 or equivalent)
Diode D_1 and D_2 - 1000 PRV, 2.5 A (RCA, SK 3081 or equivalent)
Capacitor C_1 - 200 uf, 250 VDC (Sprague Atom® TVA 1528 or equivalent)
Capacitor C_2 - 20 uf, 400 VDC Non-Polarized (Sprague Atom® TVAN 1652 or equivalent)
Relay - 10,000 ohm coil, 3.5 ma (AMF Potter and Brumfield, KCP 5; or equivalent)
Resister R_1 and R_2 - 0.5 watt, 5% tolerance

(b). Improved Circuit Designed To Handle Power Interruptions

FIGURE 9. ELECTRICAL PULSE CIRCUITS FOR DRIVING SKINNER MAGNELATCH SOLENOID VALVE WITH A MECHANICAL TIMER

CANISTER SAMPLING FIELD DATA SHEET

A. GENERAL INFORMATION

SITE LOCATION: _____
SITE ADDRESS: _____
_____
_____
SAMPLING DATE: _____

SHIPPING DATE: _____
CANISTER SERIAL NO.: _____
SAMPLER ID: _____
OPERATOR: _____
CANISTER LEAK
CHECK DATE: _____

B. SAMPLING INFORMATION

TEMPERATURE

	INTERIOR	AMBIENT	MAXIMUM	MINIMUM
START			X	X
STOP				

PRESSURE

CANISTER PRESSURE	
X	

SAMPLING TIMES

	LOCAL TIME	ELAPSED TIME METER READING
START		
STOP		

FLOW RATES

MANIFOLD FLOW RATE	CANISTER FLOW RATE	FLOW CONTROLLER READOUT

SAMPLING SYSTEM CERTIFICATION DATE: _____
QUARTERLY RECERTIFICATION DATE: _____

C. LABORATORY INFORMATION

DATE RECEIVED: _____
RECEIVED BY: _____
INITIAL PRESSURE: _____
FINAL PRESSURE: _____
DILUTION FACTOR: _____
ANALYSIS
GC-FID-ECD DATE: _____
GC-MSD-SCAN DATE: _____
GC-MSD-SIM DATE: _____
RESULTS*: _____
_____
GC-FID-ECD: _____
GC-MSD-SCAN: _____
GC-MSD-SIM: _____

_____
SIGNATURE/TITLE

* ATTACH DATA SHEETS

FIGURE 10. CANISTER SAMPLING FIELD DATA SHEET

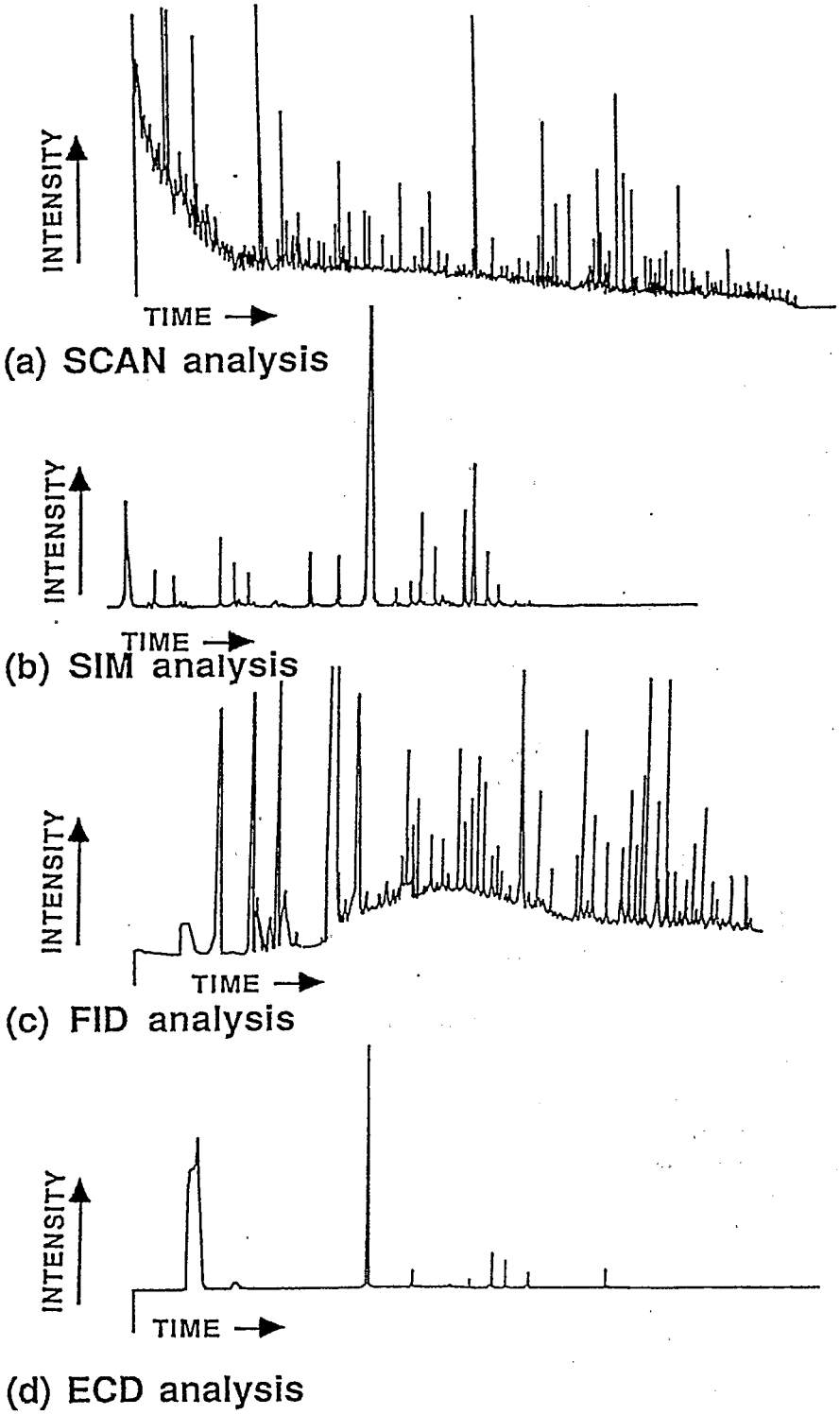

FIGURE 11. TYPICAL CHROMATOGRAMS OF A VOC SAMPLE ANALYZED BY GC-MS-SCAN-SIM MODE AND GC-MULTIDETECTOR MODE

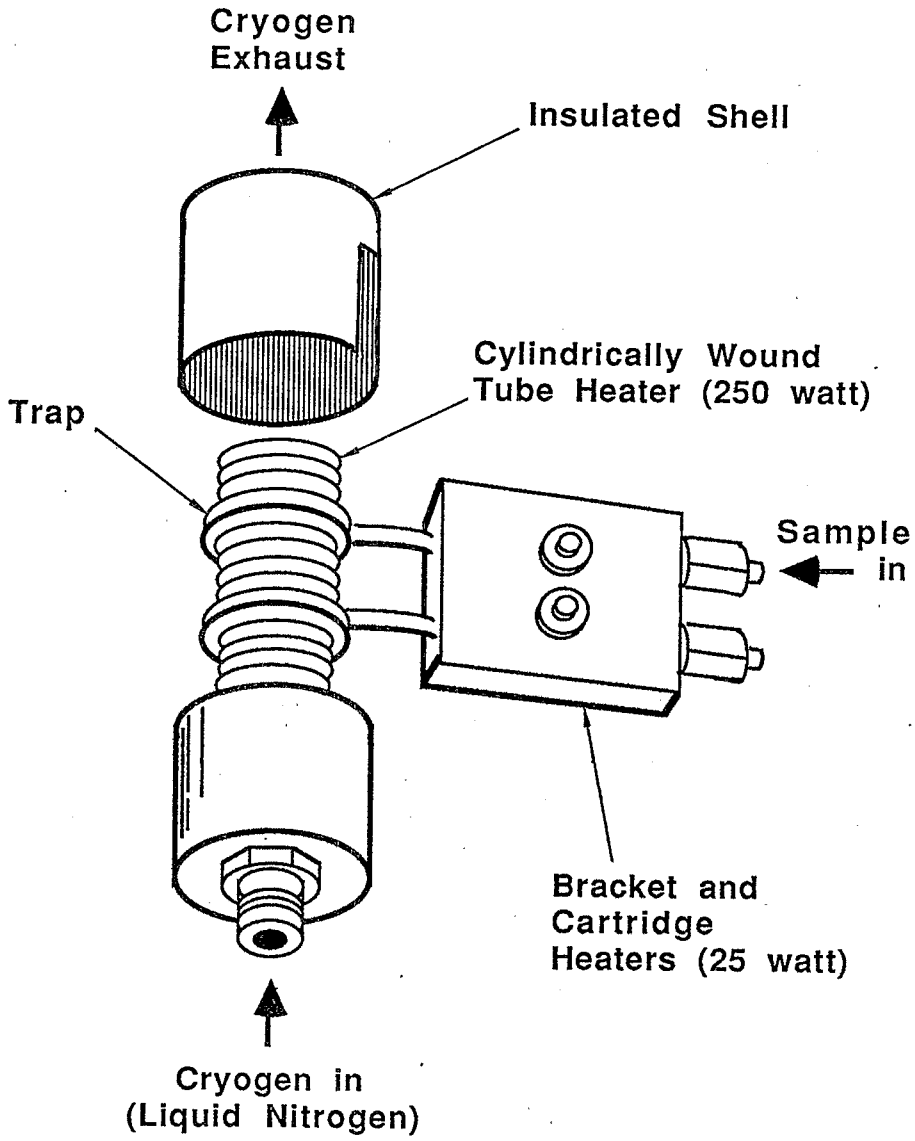

FIGURE 12. CRYOGENIC TRAPPING UNIT

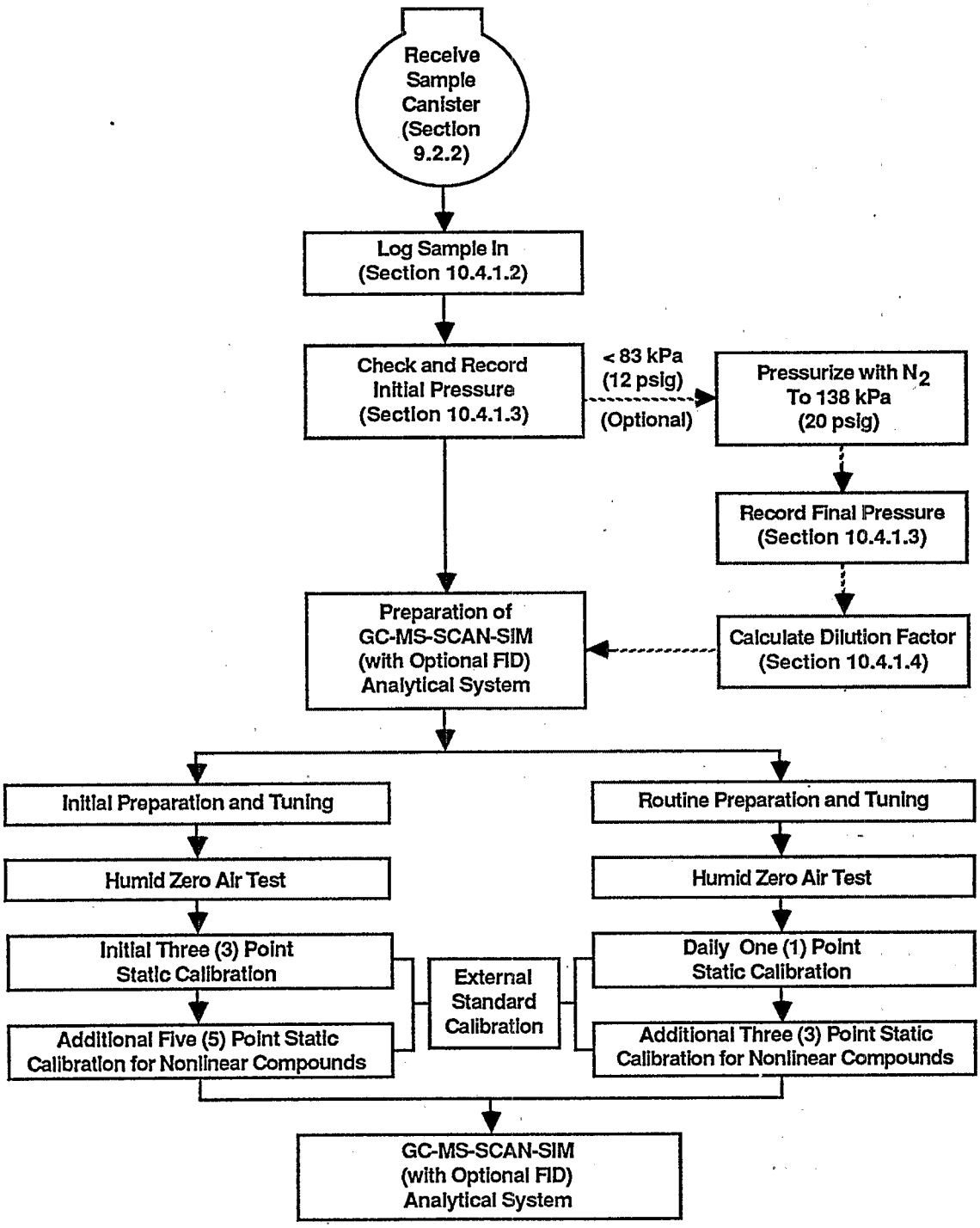

FIGURE 13. FLOWCHART OF GC-MS-SCAN-SIM ANALYTICAL SYSTEM PREPARATION (WITH OPTIONAL FID SYSTEM)

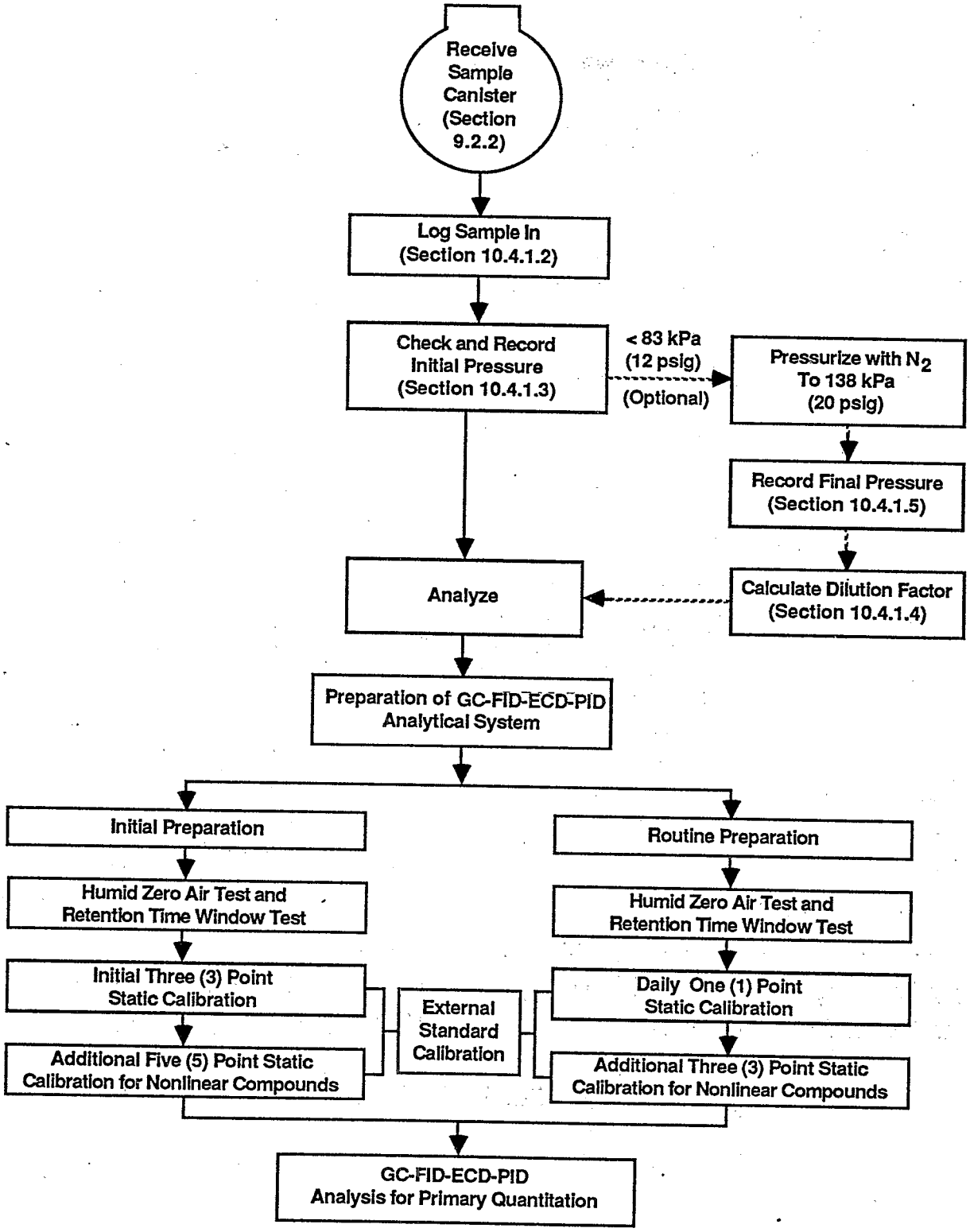

FIGURE 14. FLOWCHART OF GC-FID-ECD-PID ANALYTICAL SYSTEM PREPARATION

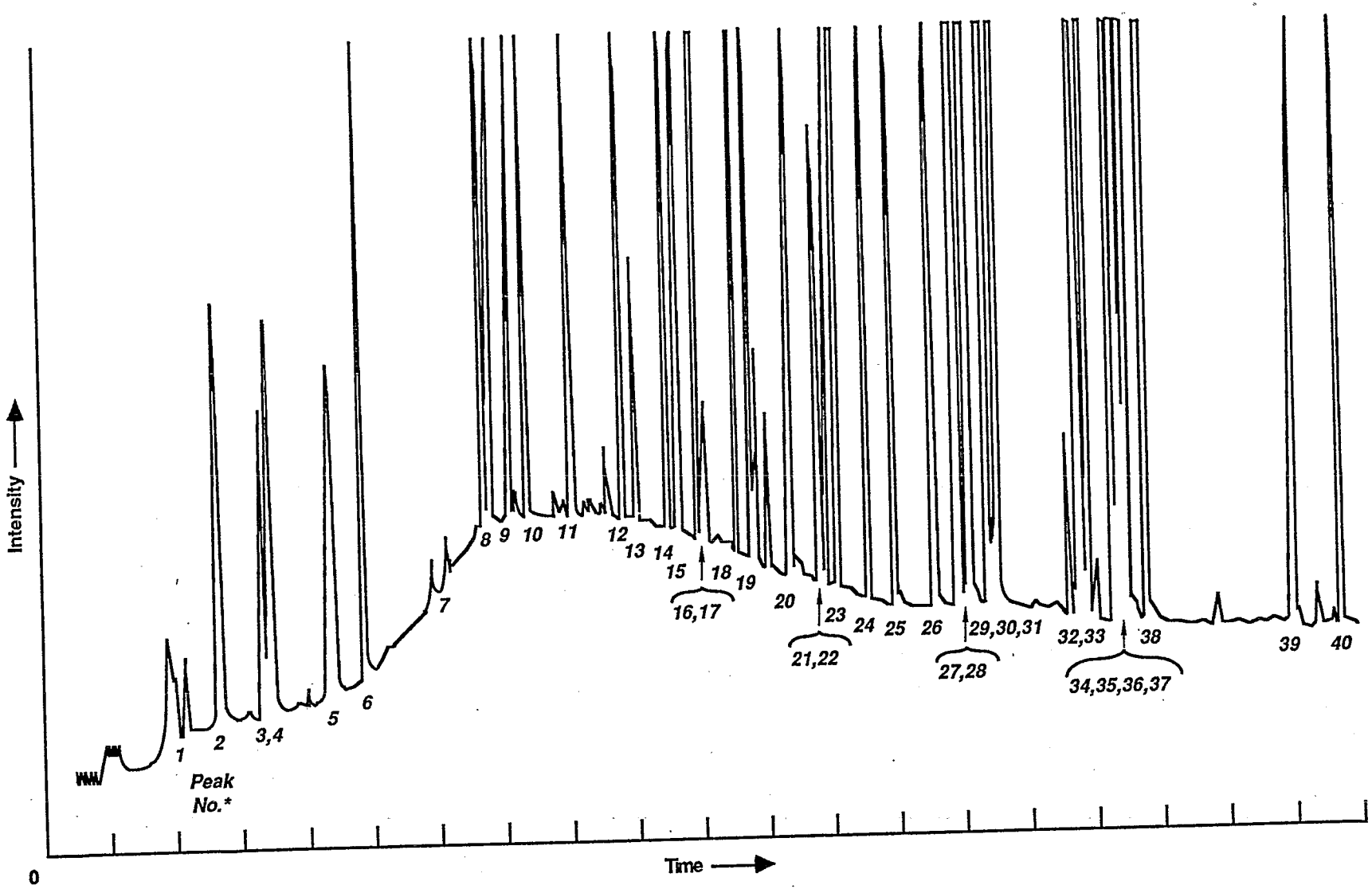

* See Table 7.0 For Peak Identification

FIGURE 15. TYPICAL FID RESPONSE TO SELECTIVE VOCs

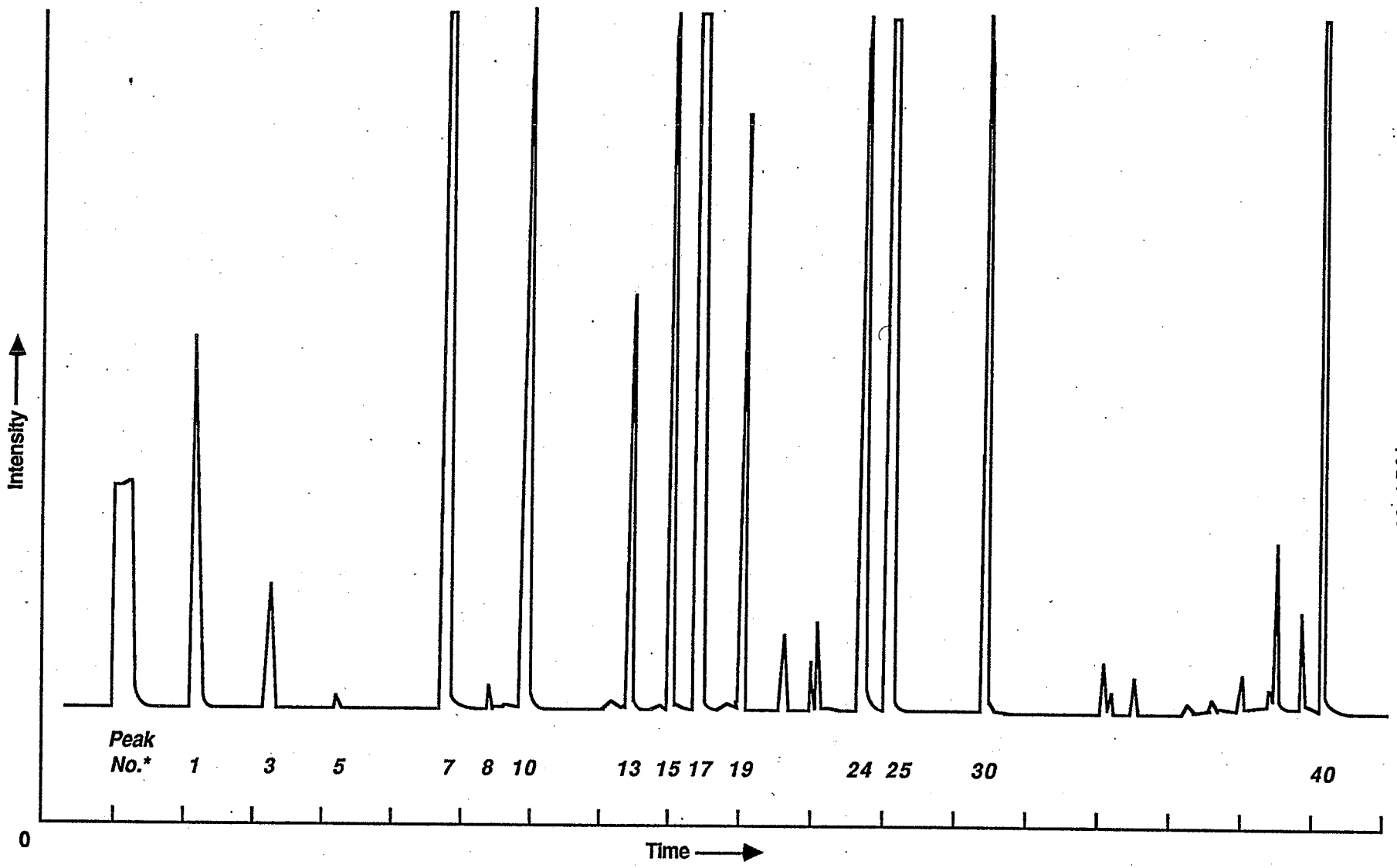

* See Table 7.0 For Peak Identification

FIGURE 16. TYPICAL ECD RESPONSE TO SELECTIVE VOCs

T014-89

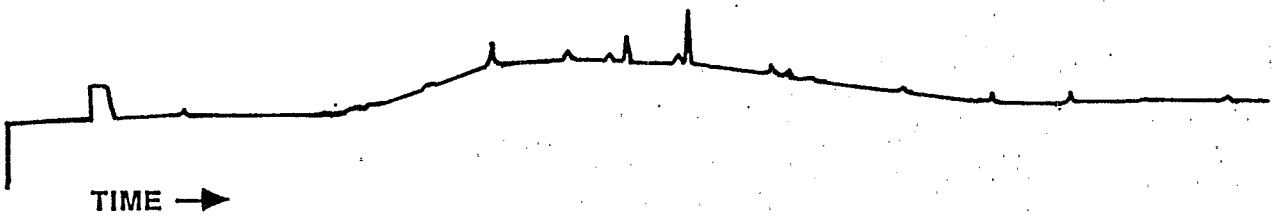

(a). Certified Sampler

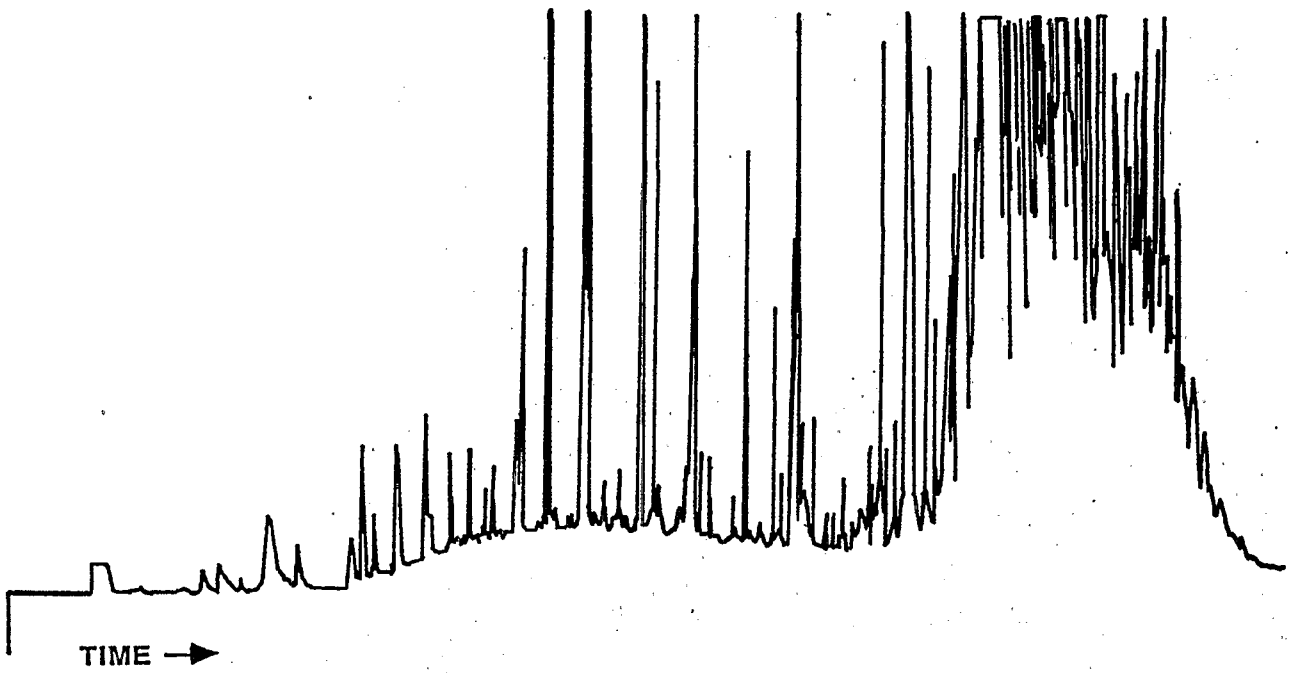

(b). Contaminated Sampler

FIGURE 17. EXAMPLE OF HUMID ZERO AIR TEST RESULTS FOR A CLEAN SAMPLER (a) AND A CONTAMINATED SAMPLER (b)

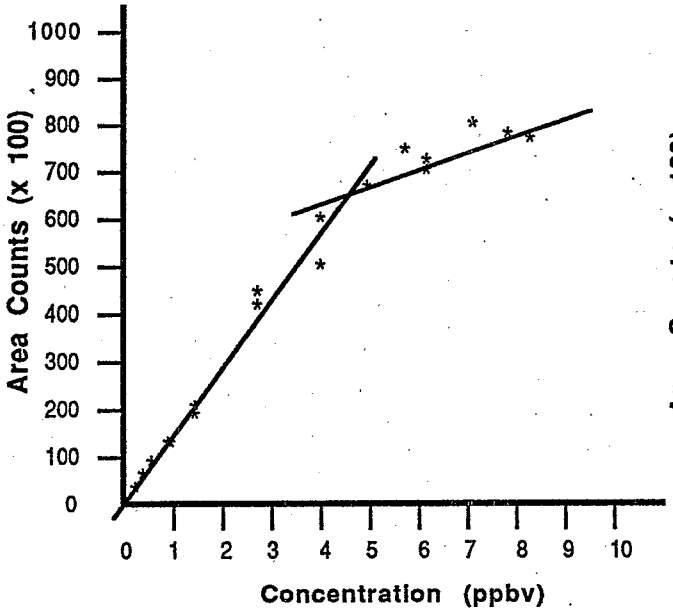

FIGURE 18(a). NONLINEAR RESPONSE OF TETRACHLOROETHYLENE ON THE ECD

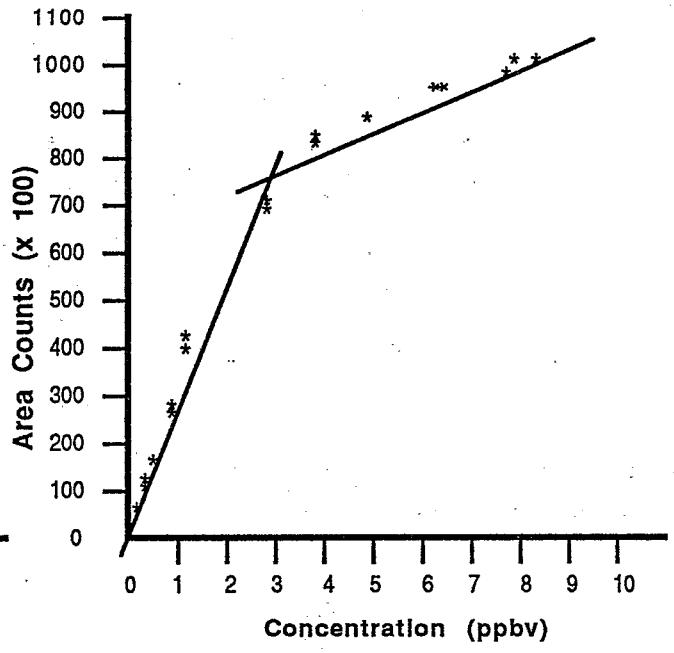

FIGURE 18(b). NONLINEAR RESPONSE OF CARBON TETRACHLORIDE ON THE ECD

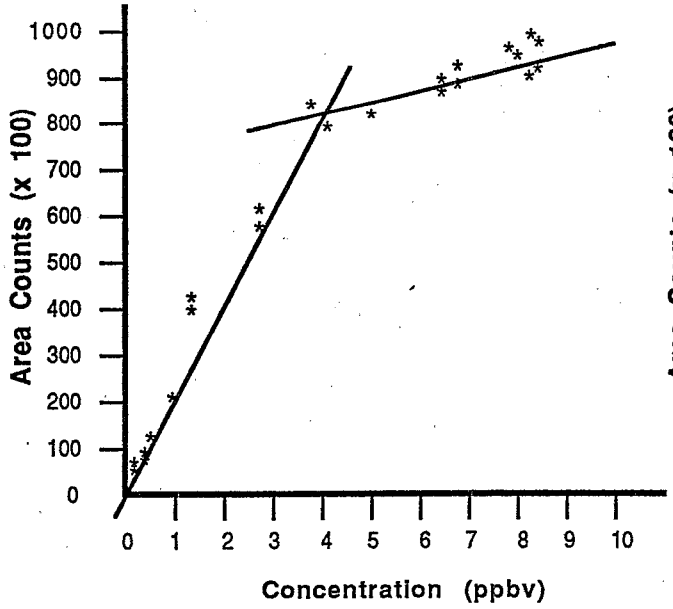

FIGURE 18(c). NONLINEAR RESPONSE OF HEXACHLOROBUTADIENE ON THE ECD

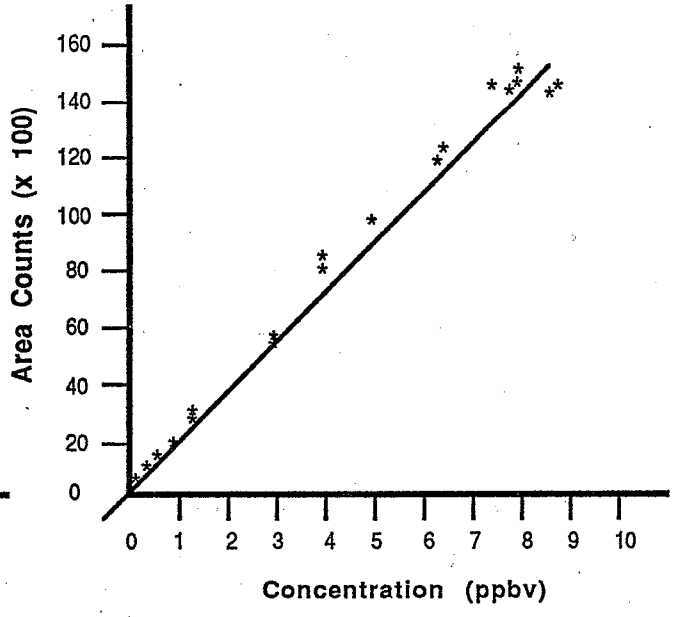

FIGURE 18(d). LINEAR RESPONSE OF CHLOROFORM ON THE ECD

FIGURE 18. RESPONSE OF ECD TO VARIOUS VOCs

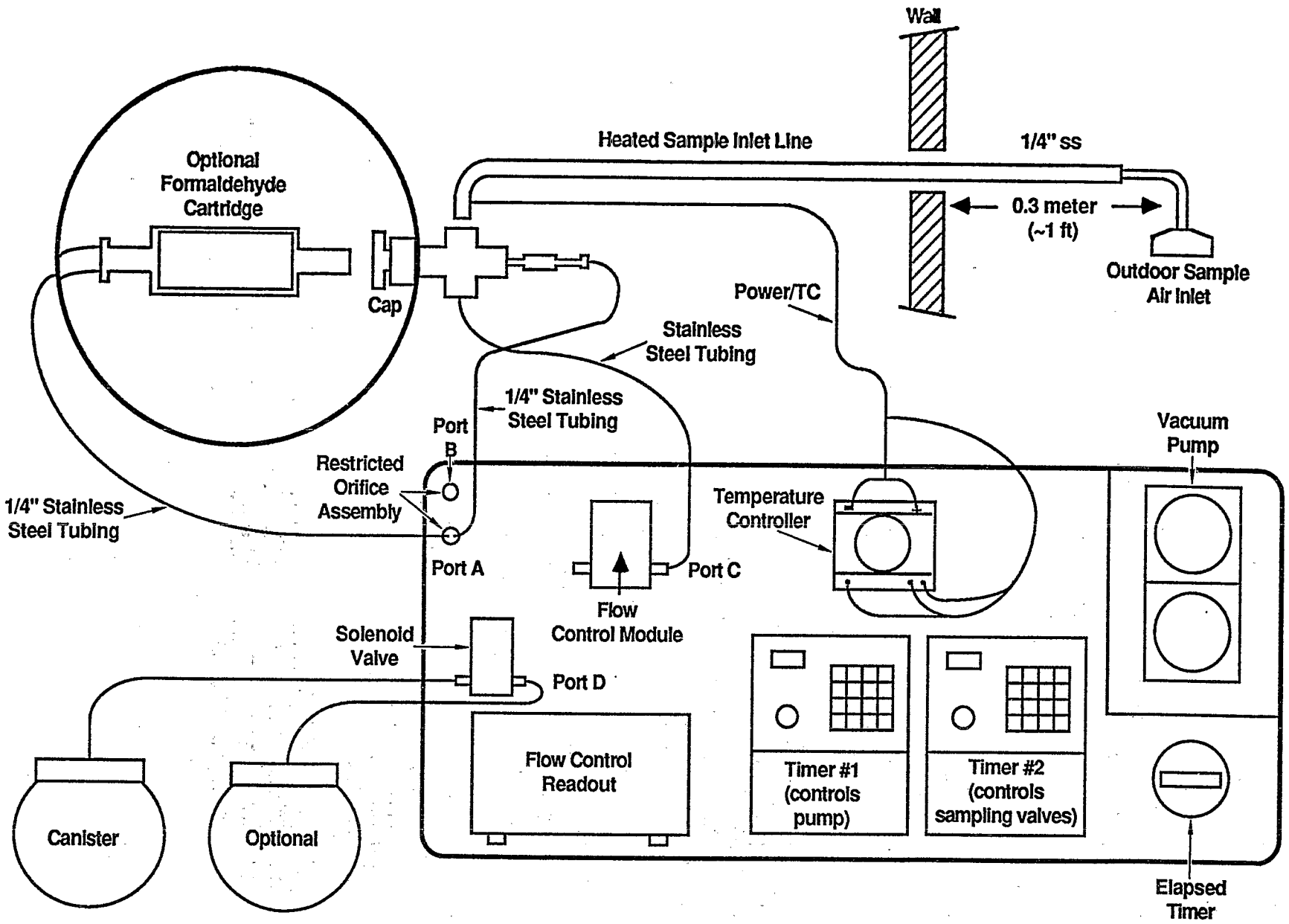

T014-92

FIGURE 19. U.S. ENVIRONMENTAL PROTECTION AGENCY UATP, SCHEMATIC OF SAMPLE INLET CONNECTIONS SAMPLER

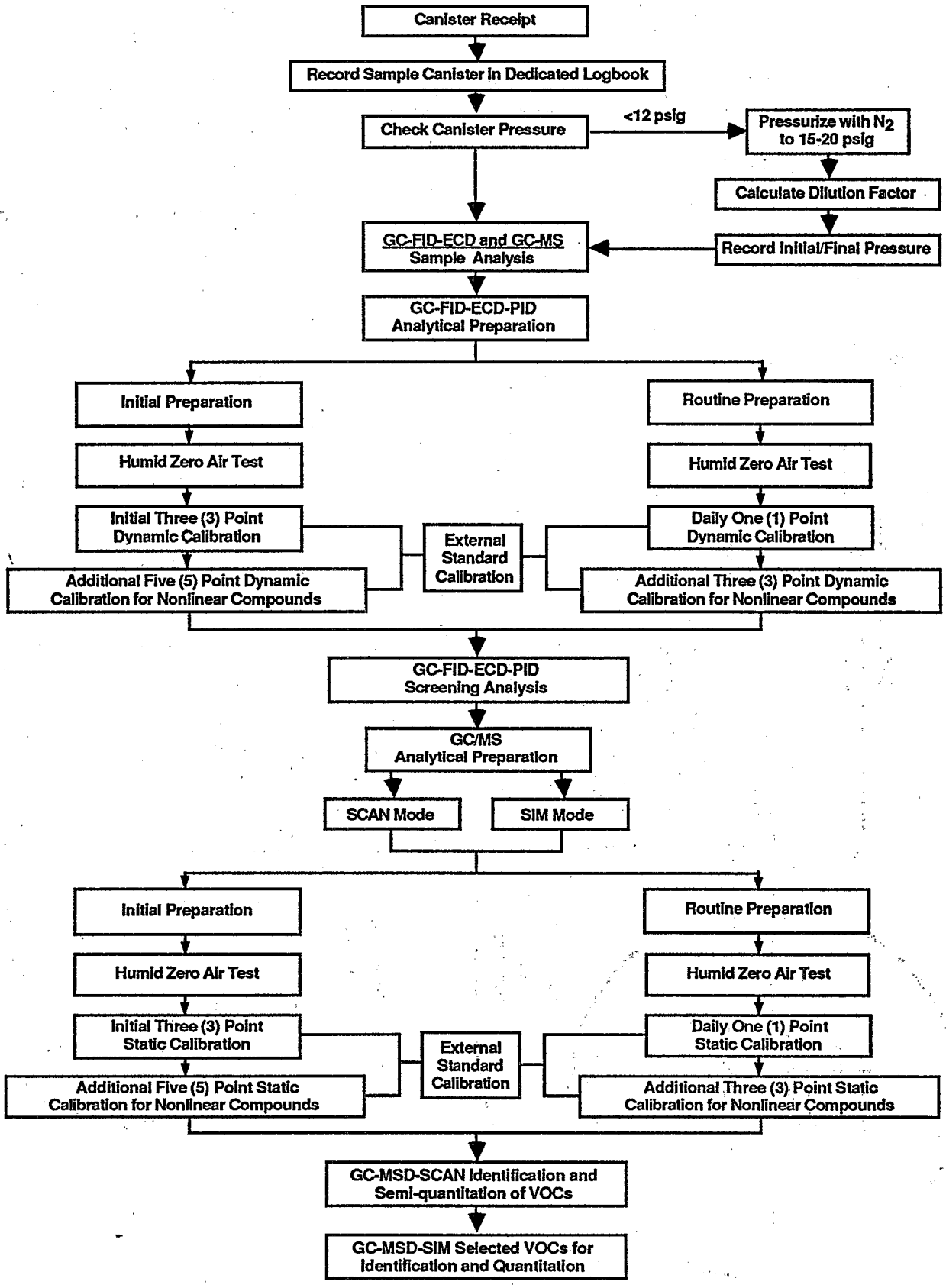

FIGURE 20. FLOWCHART OF ANALYTICAL SYSTEMS PREPARATION.

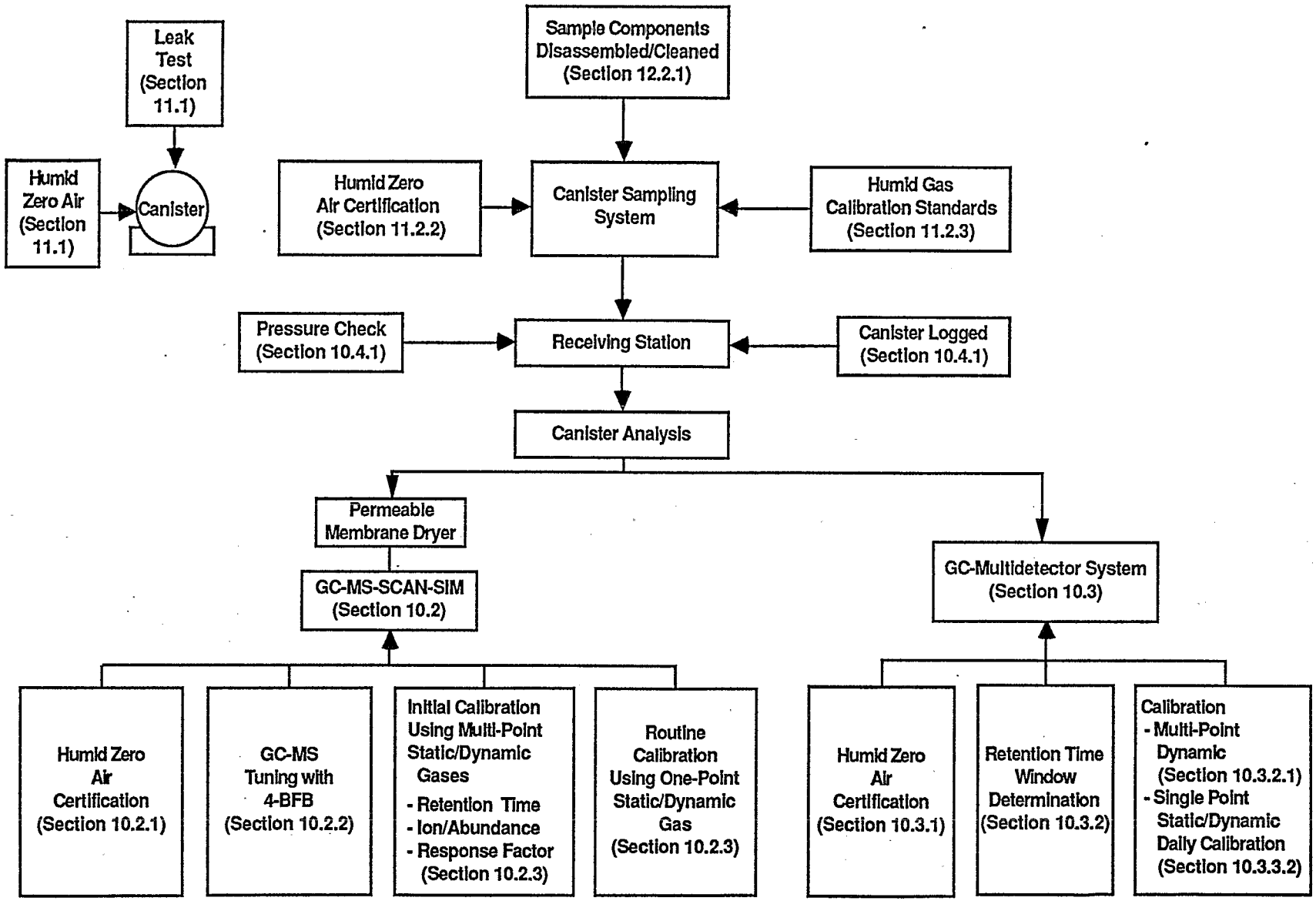

FIGURE 21. SYSTEM QUALITY ASSURANCE / QUALITY CONTROL (QA/QC) ACTIVITIES ASSOCIATED WITH VARIOUS ANALYTICAL SYSTEMS

APPENDIX A

AVAILABILITY OF AUDIT CYLINDERS FROM UNITED STATES ENVIRONMENTAL PROTECTION AGENCY USEPA PROGRAMS/ REGIONAL OFFICES, STATE AND LOCAL AGENCIES AND THEIR CONTRACTORS

1. Availability of Audit Cylinders

   1.1 The USEPA has available, at no charge, cylinder gas standards of hazardous organic compounds at the ppb level that may be used to audit the performance of ambient air source measurement systems.

   1.2 Each audit cylinder contains 5 to 18 hazardous organic compounds in a balance of N_2 gas. Audit cylinders are available in several concentration ranges. The concentration of each organic compound in the audit cylinder is within the range illustrated in Table A-1.

2. Audit Cylinder Certification

   2.1 All audit cylinders are periodically analyzed to assure that cylinder concentrations have remained stable.

   2.2 All stability analyses include quality control analyses of ppb hazardous organic gas standards prepared by the National Bureau of Standards for USEPA.

3. Audit Cylinder Acquisition

   3.1 USEPA program/regional offices, state/local agencies, and their contractors may obtain audit cylinders (and an audit gas delivery system, if applicable) for performance audits during:

   - o RCRA Hazardous Waste Trial Burns For PHOC's; and
   - o Ambient Air Measurement of Toxic Organics.

   3.2 The audit cylinders may be acquired by contacting:

   Robert L. Lampe
   U.S. Environmental Protection Agency
   Environmental Monitoring Systems Laboratory
   Quality Assurance Division
   MD-77B
   Research Triangle Park, NC 27711
   919-541-4531

TABLE A-1. AVAILABLE USEPA PERFORMANCE AUDIT CYLINDERS

Group I Compounds	Group II Compounds	Group III Compounds
Carbon tetrachloride	Trichloroethylene	Pyridine (Pyridine in Group III cylinders but certified analysis not available)
Chloroform	1,2-dichloroethane	Vinylidene chloride
Perchloroethylene	1,2-dibromoethane	1,1,2-trichloro-1,2,2-trifluoroethane (Freon-113)
Vinyl chloride	Acetonitrile	1,2-dichloro-1,1,2,2-tetrafluoroethane (Freon-114)
Benzene	Trichlorofluoromethane (Freon-11)	Acetone
	Dichlorodifluoromethane (Freon-12)	1-4 Dioxane
	Bromomethane	Toluene
	Methyl ethyl ketone	Chlorobenzene
	1,1,1-trichloroethane	

Group I Ranges	Group II Ranges	Group III Ranges
7 to 90 ppb	7 to 90 ppb	7 to 90 ppb
90 to 430 ppb	90 to 430 ppb	90 to 430 ppb
430 to 10,000 ppb		

Group IV	Group V	
Acrylonitrile	Carbon tetrachloride	Methylene chloride
1,3-butadiene	Chloroform	Trichlorofluoromethane (Freon-11)
Ethylene oxide	Perchloroethylene	Bromomethane
Methylene chloride	Vinyl chloride	Toluene
Propylene oxide	Benzene	Chlorobenzene
o-xylene	Trichloroethylene	1,3-Butadiene
	1,2-dichloroethane	o-xylene
	1,2-dibromoethane	Ethyl benzene
	1,1,1-trichloroehtane	1,2-dichloropropane

Group IV Ranges	Group V Ranges
7 to 90 ppb	1 to 40 ppb
430 to 10,000 ppb	

APPENDIX B

OPERATING PROCEDURES FOR A PORTABLE GAS CHROMATOGRAPH EQUIPPED WITH A PHOTOIONIZATION DETECTOR

1. Scope

This procedure is intended to screen ambient air environments for volatile organic compounds. Screening is accomplished by collection of VOC samples within an area and analysis on site using a portable gas chromatograph/integrator (Photovac Models 10S10, 10S50, or equivalent). This procedure is not intended to yield quantitative or definite qualitative information regarding the substances detected. Rather, it provides a chromatographic "profile" of the occurrence and intensity of unknown volatile compounds which assists in placement of fixed-site samplers.

2. Applicable Documents

2.1 ASTM Standards

E260 - Recommended Practice for General Gas Chromatography Procedures

E355 - Practice for Gas Chromatography Terms and Relationships

2.2 Other Documents

Portable Instruments User's Manual for Monitoring VOC Sources, EPA-34011-86-015, U.S. Environmental Protection Agency, Washington, DC, June, 1986.

3. Summary of Method

3.1 An air sample is extracted directly from ambient air and analyzed on site by a portable GC.

3.2 Analysis is accomplished by drawing an accurate volume of ambient air through a sampling port and into a concentrator, then the sample air is transported by carrier gas onto a packed column and into a PID, resulting in response peak(s). Retention times are compared with those in a standard chromatogram to predict the probable identity of the sample components.

4. Significance

4.1 VOCs are emitted into the atmosphere from a variety of sources including petroleum refineries, synthetic organic chemical plants,

natural gas processing plants, and automobile exhaust. Many of these VOC emissions are acutely toxic; therefore, their determination in ambient air is necessary to assess human health impacts.

4.2 Conventional methods for VOC determination use solid sorbent and canister sampling techniques.

4.3 Collection of ambient air samples in canisters provides (1) convenient integration of ambient samples over a specific time period, (e.g., 24 hours); (2) remote sampling and central analysis; (3) ease of storing and shipping samples, if necessary; (4) unattended sample collection; (5) analysis of samples from multiple sites with one analytical system; and (6) collection of sufficient sample volume to allow assessment of measurement precision and/or analysis of samples by several analytical systems.

4.4 The use of portable GC equipped with multidetectors has assisted air toxics programs by using the portable GC as a "screening tool" to determine "hot spots," potential interferences, and semi-quantitation of VOCs/SVOCs, prior to locating more traditional fixed-site samplers.

5. Definitions

Definitions used in this document and in any user-prepared Standard Operating Procedures (SOPs) should be consistent with ASTM Methods D1356 and E355. Abbreviations and symbols pertinent to this method are defined at point of use.

6. Interferences

6.1 The most significant interferences result from extreme differences in limits of detection (LOD) among the target VOCs (Table B-1). Limitations in resolution associated with ambient temperature, chromatography and the relatively large number of chemicals result in coelution of many of the target components. Coelution of compounds with significantly different PID sensitivities will mask compounds with more modest sensitivities. This will be most dramatic in interferences from benzene and toluene.

6.2 A typical chromatogram and peak assignments of a standard mixture of target VOCs (under the prescribed analytical conditions of this method) are illustrated in Figure B-1. Samples which contain a highly complex mixture of components and/or interfering levels of benzene and toluene are analyzed on a second, longer chromatographic column. The same liquid phase in the primary column is contained in the alternate column but at a higher percent loading.

6.3 Recent designs in commercially available GCs (Table B-2) have preconcentrator capabilities for sampling lower concentrations of VOCs, pre-column detection with back-flush capability for shorter analytical time, constant column temperature for method precision and accuracy and multidetector (PID, ECD, and FID) capability for versatility. Many of these newer features address the weaknesses and interferences mentioned above.

7. Apparatus

7.1 Gas chromatograph. A GC (Photovac Inc., 739 B Parks Ave, Huntington, NY, 11743, Model 10S10 or 10S50, or equivalent) used for surveying ambient air environments (which could employ a multidetector) for sensing numerous VOCs compounds eluting from a packed column at ambient temperatures. This particular portable GC procedure is written employing the photoionization detector as its major sensing device, as part of the Photovac Model 10S10 portable GC survey tool. Chromatograms are developed on a column of 3% SP-2100 on 100/120 Supelcoport (0.66 m x 3.2 mm I.D.) with a flow of 30 cm^3/min air.

7.2 GC accessories. In addition to the basic gas chromatograph, several other pieces of equipment are required to execute the survey sampling. Those include gas-tight syringes for standard injection, alternate carrier gas supplies, high pressure connections for filling the internal carrier gas reservoir, and if the Model 10S10 is used, a recording integrator (Hewlett Packard, Avondale, PA, Model 3390A, or equivalent).

8. Reagents and Materials

8.1 Carrier gas. "Zero" air [<0.1 ppm total hydrocarbon (THC)] is used as the carrier gas. This gas is conveniently contained in 0.84 m^3 (30 ft^3) aluminum cylinders. Carrier gas of poorer quality

may result in spurious peaks in sample chromatograms. A Brooks, Type 1355-OOF1AAA rotameter (or equivalent) with an R-215-AAA tube and glass float is used to set column flow.

8.2 System performance mixture. A mixture of three target compounds (e.g., benzene, trichloroethylene, and styrene) in nitrogen is used for monitoring instrument performance. The approximate concentration for each of the compounds in this mixture is 10 parts per billion (ppb). This mixture is manufactured in small, disposable gas cylinders [at 275 kPa (40 psi)] from Scott Specialty Gases, or equivalent.

8.3 Reagent grade nitrogen gas. A small disposable cylinder of high purity nitrogen gas is used for blank injections.

8.4 Sampling syringes. Gas-tight syringes, without attached shut-off valves (Hamilton Model 1002LT, or equivalent) are used to introduce accurate sample volumes into the high pressure injectors on the portable gas chromatograph. Gas syringes with shut-off valves are not recommended because of memory problems associated with the valves. For samples suspected of containing high concentrations of volatile compounds, disposable glass syringes (e.g, Glaspak, or equivalent) with stainless steel/Teflon® hub needles are used.

8.5 High pressure filler. An adapter (Photovac SA101, or equivalent) for filling the internal carrier gas reservoir on the portable GC is used to deliver "zero" air.

9. Procedure

9.1 Instrument Setup

9.1.1 The portable gas chromatograph must be prepared prior to use in the ambient survey sampling. The pre-sampling activities consist of filling the internal carrier gas cylinder, charging the internal power supply, adjusting individual column carrier gas flows, and stabilizing the photoionization detector.

9.1.2 The internal reservoir is filled with "zero" air. The internal 12V, 6AH lead/acid battery can be recharged to provide up to eight hours of operation. A battery

which is discharged will automatically cause the power to the instrument to be shut down and will require an overnight charge. During AC operation, the batteries will automatically be trickle-charged or in a standby mode.

9.1.3 The portable GC should be operated (using the internal battery power supply) at least forty minutes prior to collection of the first sample to insure that the photoionzation detector has stabilized. Upon arriving at the area to be sampled, the unit should be connected to AC power, if available.

9.2 Sample Collection

9.2.1 After the portable gas chromatograph is located and connected to 110V AC, the carrier gas flows must be adjusted. Flows to the 1.22 meter, 5% SE-30 and 0.66 meter, 3% SP2100 columns are adjusted with needle valves. Flows of 60 cm^3/min (5% SE-30) and 30 cm^3/min (3% SP2100) are adjusted by means of a calibrated rotameter. Switching between the two columns is accomplished by turning the valve located beneath the electronic module. During long periods of inactivity, the flows to both columns should be reduced to conserve pressure in the internal carrier gas supply. The baseline on the recorder/integrator is set to 20% full scale.

9.2.2 Prior to analysis of actual samples, an injection of the performance evaluation mixture must be made to verify chromatographic and detector performance. This is accomplished by withdrawing 1.0 mL samples of this mixture from the calibration cylinder and injecting it onto the 3% SP2100 column. The next sample analyzed should be a blank, consisting of reagent grade nitrogen.

9.2.3 Ambient air samples are injected onto the 3% SP2100 column. The chromatogram is developed for 15 minutes. Samples which produce particularly complex chromatograms,

especially for early eluting components, are reinjected on the 5% SE-30 column. [Note: In no instance should a syringe which has been used for the injection of the calibrant/system performance mixture be used for the acquisition and collection of samples, or vice versa.]

9.2.4 Samples have generally been collected from the ambient air at sites which are near suspected sources of VOCs and SVOCs and compared with those which are not. Typically, selection of sample locations is based on the presence of chemical odors. Samples collected in areas without detectable odors have not shown significant PID responses. Therefore, sampling efforts should be initially concentrated on "suspect" environments (i.e., those which have appreciable odors). The objective of the sampling is to locate sources of the target compounds. Ultimately, samples should be collected throughout the entire location, but with particular attention given to areas of high or frequent occupation.

9.3 Sample Analysis

9.3.1 Qualitative analysis. Positive identification of sample components is not the objective of this "screening" procedure. Visual comparison of retention times to those in a standard chromatogram (Figure B-1) are used only to predict the probable sample component types.

9.3.2 Estimation of levels. As with qualitative analysis, estimates of component concentrations are extremely tentative and are based on instrument responses to the calibrant species (e.g., benzene, trichloroethylene, styrene), the proposed component identification, and the difference in response between sample component and calibrant. For purposes of locating pollutant emission sources, roughly estimated concentrations and suspected compound types are considered sufficient.

10. Performance Criteria and Quality Assurance

Required quality assurance measures and guidance concerning performance criteria that should be achieved within each laboratory are summarized and provided in the following section.

10.1 Standard Operating Procedures

10.1.1 SOPs should be generated by the users to describe and document the following activities in their laboratory: (1) assembly, calibration, leak check, and operation of the specific portable GC sampling system and equipment used; (2) preparation, storage, shipment, and handling of the portable GC sampler; (3) purchase, certification, and transport of standard reference materials; and (4) all aspects of data recording and processing, including lists of computer hardware and software used.

10.1.2 Specific stepwise instructions should be provided in the SOPs and should be readily available to and understood by the personnel conducting the survey work.

10.2 Quality Assurance Program

10.2.1 Reagent and materials control. The carrier gas employed with the portable GC is "zero air" containing less than 0.1 ppm VOCs. System performance mixtures are certified standard mixtures purchased from Scott Specialty Gases, or equivalent.

10.2.2 Sampling protocol and chain of custody. Sampling protocol sheets must be completed for each sample. Specifics of the sample with regard to sampling location, sample volume, analysis conditions, and supporting calibration and visual inspection information are detailed by these documents. An example form is exhibited in Table B-3.

10.2.3 Blanks, Duplicates, and System Performance Samples

10.2.3.1 Blanks and Duplicates. Ten percent of all injections made to the portable GC are blanks,

where the blank is reagent grade nitrogen gas. This is the second injection in each sampling location. An additional 10% of all injections made are duplicate injections. This will enhance the probability that the chromatogram of a sample reflects only the composition of that sample and not any previous injection. Blank injections showing a significant amount of contaminants will be cause for remedial action.

10.2.3.2 System Performance Mixture. An injection of the system performance mixture will be made at the beginning of a visit to a particular sampling location (i.e., the first injection). The range of acceptable chromatographic system performance criteria and detector response is shown in Table B-4. These criteria are selected with regard to the intended application of this protocol and the limited availability of standard mixtures in this area. Corrective action should be taken with the column or PID before sample injections are made if the performance is deemed out-of-range. Under this regimen of blanks and system performance samples, approximately eight samples can be collected and analyzed in a three hour visit to each sampling location.

10.3 Method Precision and Accuracy

The purpose of the analytical approach outlined in this method is to provide presumptive information regarding the presence of selected VOCs and SVOCs emissions. In this context, precision and accuracy are to be determined. However, quality assurance criteria are described in Section 10.2 which insure the samples collected represent the ambient environment.

10.4 Range and Limits of Detection

The range and limits of detection of this method are highly compound dependent due to large differences in response of the portable GCs photoionization detector to the various

target compounds. Aromatic compounds and olefinic halogenated compounds will be detected at lower levels than the halomethanes or aliphatic hydrocarbons. The concentration range of application of this method is approximately two orders of magnitude.

TABLE B-1

ESTIMATED LIMITS OF DETECTION (LOD) FOR SELECTED VOCs
BASED ON 1 uL SAMPLE VOLUME

Compound	LOD (ng)	LOD (ppb)
Chloroform[a]	2	450
1,1,1-Trichloroethane[a]	2	450
Carbon tetrachloride[a]	2	450
Benzene	.006	2
1,2-Dichloroethane[b]	.05	14
Trichloroethylene[b]	.05	14
Tetrachloroethylene[b]	.05	14
1,2-Dibromoethane	.02	2
p-Xylene[c]	.02	4
m-Xylene[c]	.02	4
o-Xylene[d]	.01	3
Styrene[d]	.01	3

[a]Chloroform, 1,1,1-Trichloroethane, and Carbon tetrachloride coelute on 0.66 m 3% SP2100.
[b]1,2-Dichloroethane, Tricholroethylene, and Tetrachloroethylene coelute on 0.66 m 3% SP2100.
[c]p-Xylene and m-Xylene coelute on 0.66 m 3% SP2100.
[d]Styrene and o-Xylene coelute on 0.66 m 3% SP2100.

TABLE B-2

COMMERCIALLY AVAILABLE PORTABLE VOC DETECTION INSTRUMENTS

Monitor	Detection principle	Range, ppm	Sensitivity	Response time, s	Accessories	Calibration Techniques	Weaknesses	Service Rate	Lack of Response	Cost, $	Samp Rate L/m
550,551 555,580 (AID, Inc.	PID, FID	0-200, 0-2000, 0-10,000	0.1 ppm at 0-200 ppm	<5		o Bag Sampling	o Umbilical cord too short o Digital readout hard to read o Flame out frequently	8 hrs		4,300	1.5
OVA 108, 128 Century Systems, Inc. (Foxboro)	FID	0-10, 0-100, 0-1000, 0-10,000, 0-100,000	0.2 ppm (Model 128) 0.5 ppm (Model 108)	2 2	o Thermal Desorbers available o Optional GC available	o Hand Space o Direct Injection o Bag Samp.	o Battery failure o Sample line kinks o Compounds containing O_2/N give low response o Neg. resp. to CO/CO_2	8 hrs		6,300	
PI-101 (HNu Systems, Inc)	PID	1 1-20 1-200 1-2000	0.1 ppm Low molecular weights aromatics	<5	o Three lamps available o 9.5 (aromatics) o 10.2 (2-4 compounds) o 11.7 (halocarbons)	o External Gas Cyl. o Bag Samp.	o Three lamps - may miss something	10 hrs	o Cl hydro carbons o CH_4	4,955	0.5
TLV Sniffer (Bacharach)	Catalytic combustion	0-500 0-5000 0-50,000	2.0 ppm	5		o Bag Samp. o Head Space o Bag Samp.				900	
Ecolyzer 400 (Energetics Science)	Catalytic combustion	0-100% LFL	1% LFL	15			o Changes in gas temp/humidity affects response				
Miran 1A (Foxboro)	IR	ppm to %	1 ppm	1,4,10 and 40						9,500	
Miran 1B (Foxboro)	IR	ppm to %								12,500	
Scentor (Sentex)	GC/EC, Argon Ionization PID		0.01 ppb Cl organics	2	Preconcentrator Thermal Desoprtion GC Columns Auto Cal. from Integral Gas Cylinder	o Internal gas cyl. o Preconcentrator o GC Column				12,950	
Photovac Standard Automatic Computer Auto Comp. Communication	PID (UV Light)	0	0.1 ppb Benzene with signal-to-noise ratio 4:1, Good for aromatics	2	o Dual Column o Manual/Auto Injection o Column Cond. o Pre-flush o Auto Dial Modem o Programmable		o Column operates at ambient temp. o STD in lab, then to field at diff. temp o Can't inject liquid samp. o Light fractions interfere		o H_2O o O_2	6,995 8,995 10,500 10,955 12,955	
Photovac Tip	PID	0-2000 ppm	0.05 ppm Benzene	3							

TABLE B-3

PORTABLE GAS CHROMATOGRAPH
SAMPLING DATA SHEET

DATE: _____ LOCATION: _____ TIME: _____

CHROMATOGRAPHIC CONDITIONS: _____

COLUMN 1: COLUMN TYPE:

I.D. (mm):_____ LENGTH (mm):_____ FLOW (mL/min):_____

COLUMN 2: COLUMN TYPE:

I.D. (mm):_____ LENGTH (mm):_____ FLOW (mL/min):_____

INJ. NO.	INJ. VOL.	COLUMN NO.	SETTING	LOCATION

SITE PLAN (indicate sampling locations):

_____ DATE

_____ SIGNATURE

TABLE B-4

SYSTEM PERFORMANCE CRITERIA FOR PORTABLE GC[a]

Criteria	Test Compound	Acceptable Range	Suggested Corrective Action
PID Response	Trichloroethylene	$\geq 10^8$ uV-sec/ng	Re-tune or replace lamp
Elution Time	Styrene	2.65 $\pm$ 0.15 min	Inspect for leaks, adjust carrier flow
Resolution[b]	Benzene/Trichloro-ethylene	$\geq$ 1.4	Replace column

[a]Based on analysis of a vapor mixture of benzene, styrene, and trichloroethylene.
[b]Define by: $R + = 2d/(W_1+W_2)$; where d = distance between the peaks and W = peak width at base.

TABLE B-5

ESTIMATED LIMITS OF DETECTION (LOD) FOR SELECTED VOCs

Compound	LOD (ng)	LOD (ppb)
Chloroform[a]	2	450
1,1,1-Trichloroethane[a]	2	450
Carbon tetrachloride[a]	2	450
Benzene	.006	2
1,2-Dichloroethane[b]	.05	14
Trichloroethylene[b]	.05	14
Tetrachloroethylene[b]	.05	14
1,2-Dibromoethane	.02	2
p-Xylene[c]	.02	4
m-Xylene[c]	.02	4
o-Xylene[d]	.01	3
Styrene[d]	.01	3

[a]Chloroform, 1,1,1-Trichloroethane, and Carbon tetrachloride coelute on 0.66 m 3% SP2100.
[b]1,2-Dichloroethane, Trichloroethylene, and Tetrachloroethylene coelute on 0.66 m 3% SP2100.
[c]p-Xylene and m-Xylene coelute on 0.66 m 3% SP2100.
[d]Styrene and o-Xylene coelute on 0.66 m 3% SP2100.

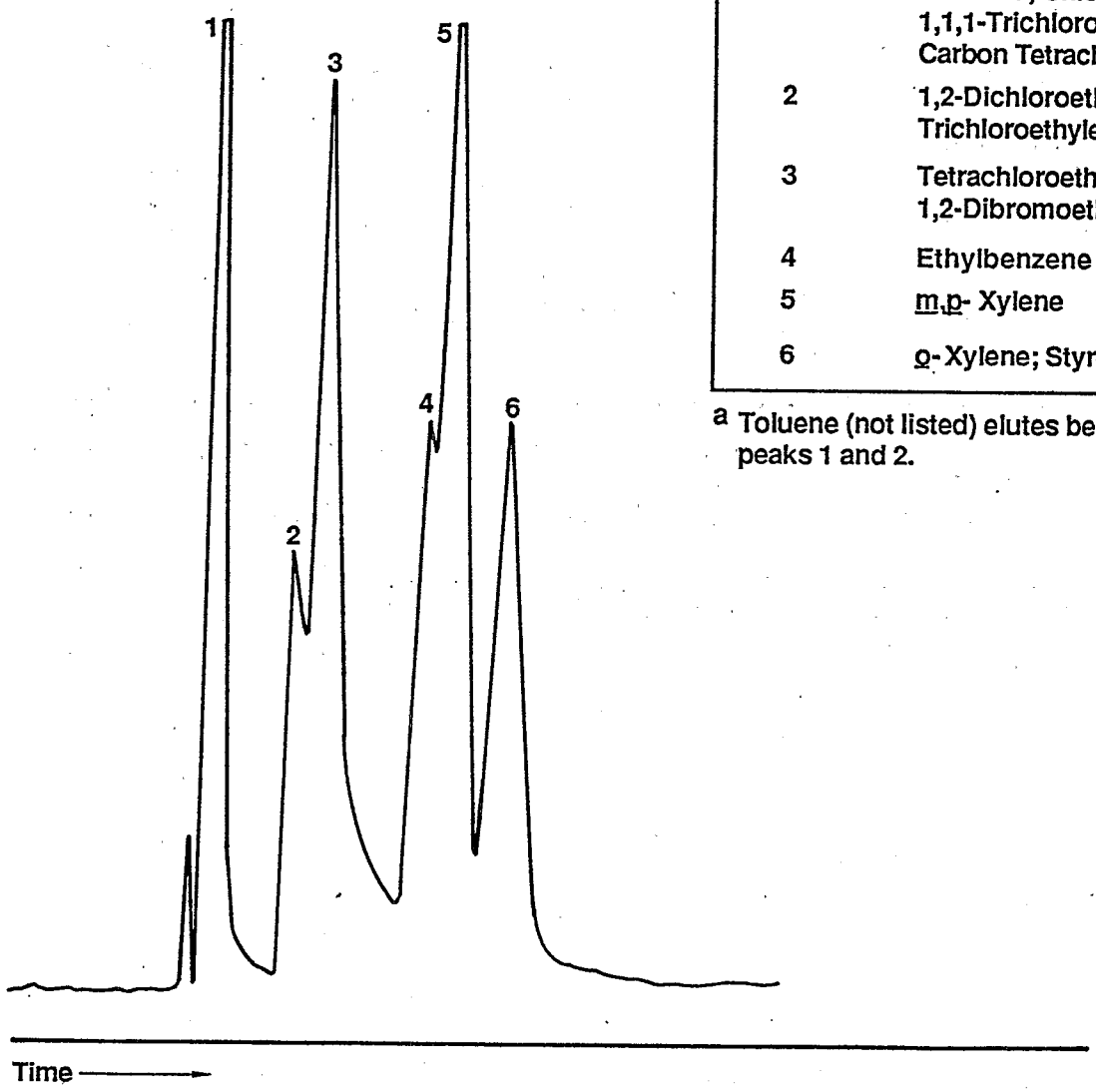

Peak Assignments For Standard Mixture

Peak No.	Compound(s) [a]
1	Benzene; Chloroform; 1,1,1-Trichloroethane; Carbon Tetrachloride
2	1,2-Dichloroethane; Trichloroethylene
3	Tetrachloroethylene; 1,2-Dibromoethane
4	Ethylbenzene
5	m,p- Xylene
6	o-Xylene; Styrene

[a] Toluene (not listed) elutes between peaks 1 and 2.

FIGURE B-1. TYPICAL CHROMATOGRAM OF VOCs DETERMINED BY A PORTABLE GC

APPENDIX C

INSTALLATION AND OPERATION PROCEDURES FOR U.S. ENVIRONMENTAL PROTECTION AGENCY'S URBAN AIR TOXIC POLLUTANT PROGRAM SAMPLER

1. Scope

1.1 The subatmospheric sampling system described in this method has been modified and redesigned specifically for use in USEPA's Urban Air Toxic Pollutant Program (UATP), a joint project of USEPA's Office of Air Quality Planning and Standards, the Environmental Monitoring Systems Laboratory, and the participating state air pollution control agencies. The purpose of UATP is to provide analytical support to the states in their assessment of potential health risks from certain toxic organic compounds that may be present in urban atmospheres. The sampler is described in the paper, "Automatic Sampler for Collection of 24-Hour Integrated Whole-Air Samples for Organic Analysis," to be presented at the 1988 Annual Meeting of APCA, Dallas, Texas, June, 1988 (Paper No. 88-150.3).

1.2 The sampler is based on the collection of whole air samples in 6-liter, SUMMA® passivated stainless steel canisters. The sampler features electronic timer for ease, accuracy and flexibility of sample period programming, an independently setable presample warm-up and ambient air purge period, protection from loss of sample due to power interruptions, and a self-contained configuration housed in an all-metal portable case, as illustrated in Figure C-1.

1.3 The design of the sampler is pumpless, using an evacuated canister to draw the ambient sample air into itself at a fixed flow rate (3-5 cm^3/min) controlled by an electronic mass flow controller. Because of the relatively low sample flow rates necessary for the integration periods, auxiliary flushing of the sample inlet line is provided by a small, general-purpose vacuum pump (not in contact with the sample air stream). Further, experience has shown that inlet lines and surfaces sometimes build up or accumulate substantial concentrations of organic materials under stagnant (zero flow rate) conditions. Therefore such lines and surfaces need to be purged and equilibrated to the sample air for some time prior to the beginning of the actual sample collection period. For this reason, the sampler includes dual timers, one of which is set to start the pump several hours prior to the specified start of the sample period to purge the inlet lines and

surfaces. As illustrated in Figure C-1, sample air drawn into the canister passes through only four components: the heated inlet line, a 2-micron particulate filter, the electron flow controller, and the latching solenoid valve.

2. Summary of Method

2.1 In operation, timer 1 is set to start the pump about 6 hours before the scheduled sample period. The pump draws sample air in through the sample inlet and particulate filter to purge and equilibrate these components, at a flow rate limited by the capillary to approximately 100 cm^3/min. Timer 1 also energizes the heated inlet line to allow it to come up to its controlled temperature of 65 to 70 degrees C, and turns on the flow controller to allow it to stabilize. The pump draws additional sample air through the flow controller by way of the normally open port of the 3-way solenoid valve. This flow purges the flow controller and allows it to achieve a stable controlled flow at the specified sample flow rate prior to the sample period.

2.2 At the scheduled start of the sample period, timer 2 is set to activate both solenoid valves. When activated, the 3-way solenoid valve closes its normally open port to stop the flow controller purge flow and opens its normally closed port to start flow through the aldehyde sample cartridges. Simultaneously, the latching solenoid valve opens to start sample flow into the canister.

2.3 At the end of the sample period, timer 2 closes the latching solenoid valve to stop the sample flow and seal the sample in the canister and also de-energizes the pump, flow controller, 3-way solenoid, and heated inlet line. During operation, the pump and sampler are located external to the sampler. The 2.4 meter (8 foot) heated inlet line is installed through the outside wall, with most of its length outside and terminated externally with an inverted glass funnel to exclude precipitation. The indoor end is terminated in a stainless steel cross fitting to provide connections for the canister sample and the two optional formaldehyde cartridge samples.

3. Sampler Installation

3.1 The sampler must be operated indoors with the temperature between 20-32°C (68 to 90°F). The sampler case should be located conveniently

on a table, shelf, or other flat surface. Access to a source of 115 vac line power (500 watts min) is also required. The pump is removed from the sampler case and located remotely from the sampler (connected with a 1/4 inch O.D. extension tubing and a suitable electrical extension cord).

3.2 Electrical Connections (Figure C-1)

3.2.1 The sampler cover is removed. The sampler is not plugged into the 115 vac power until all other electrical connections are completed.

3.2.2 The pump is plugged into its power connector (if not already connected) and the battery connectors are snapped onto the battery packs on the covers of both timers.

3.2.3 The sampler power plug is inserted into a 115 volts ac line grounded receptacle. The sampler must be grounded for operator safety. The electrical wires are routed and tied so they remain out of the way.

3.3 Pneumatic Connections

3.3.1 The length of 1/16 inch O.D. stainless steel tubing is connected from port A of the sampler (on the right side of the flow controller module) to the air inlet line.

3.3.2 The pump is connected to the sampler with 1/4 inch O.D. plastic tubing. This tubing may be up to 7 meters (20 feet) long. A short length of tubing is installed to reduce pump noise. All tubing is conveniently routed and, if necessary, tied in place.

4. Sampler Preparation

4.1 Canister

4.1.1 The sample canister is installed no more than 2 days before the scheduled sampling day.

4.1.2 With timer #1 ON, the flow controller is allowed to warm up for at least 15 minutes, longer if possible.

4.1.3 An evacuated canister is connected to one of the short lengths of 1/8 inch O.D. stainless steel tubing from port B (solenoid valve) of the sampler. The canister valve is left closed. The Swagelok fitting on the canister must not be cross-threaded. The connection is tightened snugly with a wrench.

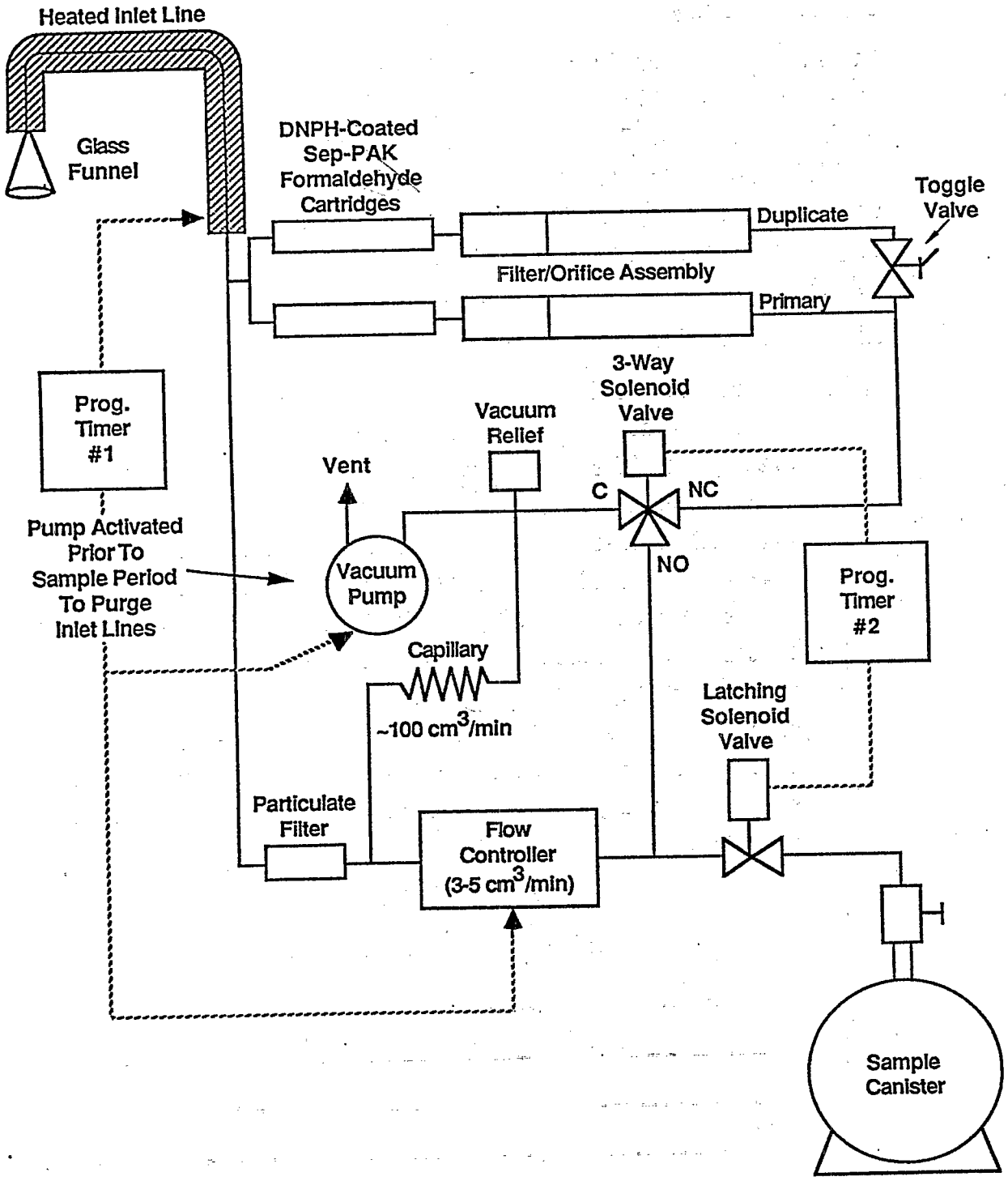

FIGURE C-1. U.S. ENVIRONMENTAL PROTECTION AGENCY UATP SAMPLER SCHEMATIC OF SAMPLE INLET CONNECTIONS