United States
Environmental Protection
Agency

Air and Energy Engineering
Research Laboratory
Research Triangle Park NC 27711

Technology Transfer

EPA/625/1-85/019

EPA

Manual

Flue Gas Desulfurization Inspection and Performance Evaluation

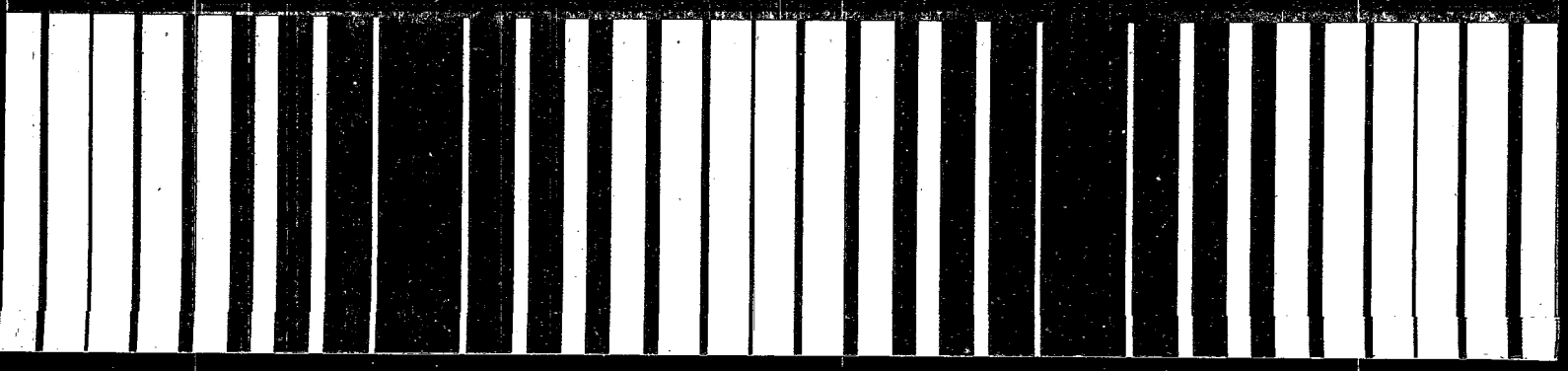

EPA/625/1-85/019
October 1985

FLUE GAS DESULFURIZATION INSPECTION AND PERFORMANCE EVALUATION MANUAL

by

PEI Associates, Inc.
11499 Chester Road, P.O. Box 46100
Cincinnati, Ohio 45246-0100

for

Air and Energy Engineering Research Laboratory
Office of Research and Development
U.S. Environmental Protection Agency
Research Triangle Park, NC 27711

and

Center for Environmental Research Information
Office of Research and Development
U.S. Environmental Protection Agency
Cincinnati, OH 45268

FOREWORD

The 1970 Clean Air Act required the U.S. Environmental Protection Agency (EPA) to set air quality goals for a list of priority pollutants. In December 1971, under Section 111 of the Clean Air Act, New Source Performance Standards (NSPS) were issued to limit emissions of sulfur dioxide (SO_2), particulate matter, and nitrogen oxides (NO_x) from new, modified, and reconstructed fossil-fuel-fired steam generators used in electric utility and large industrial facilities. In 1977, amendments made to the Clean Air Act directed the EPA to tighten emission standards from new coal-fired utility and large industrial boilers, which resulted in the revised NSPS of June 1979. In addition to NSPS, air emissions from coal-fired utility boilers are also governed by State Implementation Plans (SIP's) and the Prevention of Significant Deterioration (PSD) program.

As of 1985, flue gas desulfurization (FGD) was the most commercially developed means of controlling SO_2 emissions from coal-fired powerplants. Currently, about 16 percent of the domestic coal-fired generating capacity is controlled by FGD, and this percentage is expected to double by 1991. Of the 126 FGD systems (representing 53,189 MW of gross power-generating capacity in the United States), only nine are dry systems, and these represent only 3 percent of the total controlled capacity. In contrast, more than 80 percent of the controlled capacity is equipped with slurry (wet) systems, which use either lime or limestone as the SO_2 scrubbing reagent. (This trend is expected to continue, as 70 percent of the FGD systems now under construction or for which contracts have been awarded are of this type.)

Lime/limestone slurry FGD, however, represents the most difficult application of scrubbing technology because of the process design and operation and maintenance (O&M) considerations required to withstand the inherent problems of erosion, corrosion, scaling, and plugging in such systems. Inspectors from Federal and State environmental regulatory agencies need to be familiar with the problems that plague lime/limestone slurry FGD systems to aid them in their inspections and performance evaluations of these systems with respect to compliance with emission standards. For this reason, and to aid in the permitting process, this manual was prepared and has been approved for publication.

ABSTRACT

Flue gas desulfurization (FGD) is the most developed of the commercial means of controlling sulfur dioxide (SO_2) emissions from coal-fired powerplants. Of the 126 FGD systems currently in service on domestic coal-fired utility boilers, only nine are dry FGD systems (representing only 3 percent of the total controlled capacity). Conversely, more than 80 percent of this capacity is controlled by slurry (wet) systems in which either lime or limestone is used as the SO_2 scrubbing agent. This preference is attributed primarily to favorable costs, demonstrated commercial operating experience, and simplicity of design and operation. Because of this widespread usage of lime/limestone slurry FGD, this manual is devoted exclusively to such systems.

Despite these favorable aspects, however, lime/limestone slurry FGD represents the most difficult application of scrubbing technology for the control of coal-fired boiler flue gas because of the process design and operation and maintenance considerations required to withstand the inherent problems of erosion, corrosion, scaling, and plugging of such systems.

The intent of this manual is to provide inspectors from Federal and state environmental agencies with information regarding the problems that plague lime/limestone slurry FGD systems that will aid them in their inspections and performance evaluations of these systems with respect to compliance with the emission standards that have evolved since the passage of the 1970 Clean Air Act.

A unique feature of this manual is its structure as a "tool," or working document, which will accompany the inspector on each plant inspection. Thus, the document is presented in

"user friendly" fashion and tailored to provide practical information for its intended use--to assist in the systematic inspection of an FGD system to determine present and future compliance status. This approach entails the use of nomographs, checklists, matrices, simplified diagrams, cross-referencing, and indexing of textual information, and the presentation of important guidelines and recommendations in a readily discernible fashion.

With regard to the intended audience, for purposes of this manual, the field inspector is defined as the individual who periodically inspects powerplants to ensure their compliance with emission standards. The scope of the inspector's responsibility is defined as ranging from confirmation of existing status reports to anticipation of future compliance status (i.e., avoidance of potential noncompliance episodes).

CONTENTS

	Page
Foreword	ii
Abstract	iv
Figures	xii
Tables	xv
Metric Conversions	xvii
Acknowledgment	xviii
1. Introduction	1
1.1 Purpose	1
1.2 Approach	1
1.3 Scope and Content	3
1.4 Organization of the Manual	4
2. Lime/Limestone FGD Technology	8
2.1 Environmental Regulations	8
2.1.1 Air Emission Standards	8
2.1.1.1 1971 NSPS	8
2.1.1.2 1979 NSPS	9
2.1.1.3 State Implementation Plans	9
2.1.1.4 Prevention of Significant Deterioration	11
2.1.2 Water and Solid Waste Standards	12
2.1.2.1 Water Regulations	12
2.1.2.2 Resource Conservation and Recovery Act	12
2.2 Coal Properties and Flue Gas Characteristics	12
2.3 Basic Principles of Lime/Limestone Slurry Processes	13
2.3.1 Process Description	15
2.3.2 Operational Factors	17
2.3.2.1 Stoichiometric Ratio	17
2.3.2.2 L/G Ratio	18

CONTENTS (continued)

		Page
2.3.2.3	Slurry pH	19
2.3.2.4	Relative Saturation	19
2.3.2.5	Oxidation	20
2.3.2.6	Chemical Additives	20
2.4	FGD System Design Configurations	21
2.4.1	Development of Technology	21
2.4.1.1	Historical Perspective	21
2.4.1.2	Characteristics of Technology Generation	25
2.4.2	Existing Design Configurations	28
2.4.2.1	Fans	30
2.4.2.2	Scrubbers/Absorbers	32
2.4.2.3	Mist Eliminators	38
2.4.2.4	Reheaters	39
2.4.2.5	Ductwork and Dampers	42
2.4.2.6	Reagent Conveyors and Storage	46
2.4.2.7	Ball Mills	50
2.4.2.8	Slakers	52
2.4.2.9	Tanks	54
2.4.2.10	Thickeners	55
2.4.2.11	Vacuum Filters	55
2.4.2.12	Centrifuges	57
2.4.2.13	Waste Processing	60
2.4.2.14	Waste Disposal	61
2.4.2.15	Pumps and Valves	61
2.4.3	Operational Utility Lime and Limestone Slurry FGD Systems	63
2.5	FGD O&M Considerations	63
2.5.1	Failure Modes	74
2.5.1.1	Coal Characteristics	80
2.5.1.2	Boiler Characteristics	80
2.5.1.3	Application Characteristics	81
2.5.1.4	Design and Operation Considerations	82
2.5.2	System Layout, Accessibility, and Design	83

CONTENTS (continued)

		Page
2.5.2.1	Gas Handling and Treatment	85
2.5.2.2	Reagent Preparation and Feed	88
2.5.2.3	Waste Solids Handling and Disposal	89
2.5.3	O&M Practices	90
2.5.3.1	Standard Operations	90
2.5.3.2	Initial Operations	93
2.5.3.3	Startup, Shutdown, Standby, and Outage	93
2.5.3.4	System Upsets	94
2.5.3.5	Operating Staff and Training	95
2.5.3.6	Preventive Maintenance Programs	95
2.5.3.7	Unscheduled Maintenance	97
3.	Performance Monitoring	99
3.1	Key Operating Parameters and Their Measurement	99
3.1.1	Gas Circuit Parameters	100
3.1.1.1	SO_2	100
3.1.1.2	NO_x	100
3.1.1.3	Opacity	100
3.1.1.4	O_2	100
3.1.1.5	Gas Flow Rate	101
3.1.2	Slurry Circuit Parameters	102
3.1.2.1	pH	102
3.1.2.2	Slurry Flow Rates	102
3.1.2.3	Solids Content	102
3.2	Instrumentation	103
3.2.1	pH Instrumentation	103
3.2.2	Slurry Flow Rates	104
3.2.3	Solids Content	107
3.3	Testing and Monitoring	107
3.3.1	Manual Testing	107
3.3.2	Alternative Methods	110
3.3.3	Continuous Emissions Monitoring (CEM)	111
3.3.4	Performance Specification Tests	114

CONTENTS (continued)

		Page
3.4	Recordkeeping Practices and Procedures	115
4.	Inspection Methods and Procedures	120
4.1	Guidelines for Overall Plant Inspection	121
4.2	Inspection Procedures	123
4.2.1	Gas Handling and Treatment	124
4.2.1.1	Fans	124
4.2.1.2	Scrubbers/Absorbers	124
4.2.1.3	Mist Eliminators	127
4.2.1.4	Reheaters	131
4.2.1.5	Ductwork and Dampers	131
4.2.2	Reagent Preparation and Feed	134
4.2.2.1	Reagent Conveyors and Storage	134
4.2.2.2	Ball Mills	138
4.2.2.3	Slakers	138
4.2.2.4	Tanks	138
4.2.3	Waste Solids Handling and Disposal	138
4.2.3.1	Thickeners	138
4.2.3.2	Vacuum Filters	142
4.2.3.3	Centrifuges	142
4.2.3.4	Waste Processing	142
4.2.3.5	Waste Disposal	142
4.2.3.6	Pumps and Valves	148
4.3	Summary	148
5.	Performance Evaluation and Problem Diagnosis/ Correction	153
5.1	Data Collection Methods	154
5.1.1	Sources	154
5.1.2	Forms of Data	155
5.2	Performance Evaluation	156
5.2.1	Emissions	156

CONTENTS (continued)

		Page
5.2.1.1	SO_2	156
5.2.1.2	Particulate Matter	157
5.2.1.3	Opacity	158
5.2.2	Process	159
5.2.2.1	Gas Flow	160
5.2.2.2	Gas-side Pressure Drop	160
5.2.2.3	Slurry pH	163
5.2.2.4	Slurry Flow	163
5.2.2.5	Slurry Solids	164
5.2.2.6	Reagent Consumption	164
5.2.2.7	Solid Waste Production	166
5.2.2.8	Makeup Water Source and Consumption	166
5.2.2.9	Energy Consumption	170
5.2.3	O&M	174
5.2.4	Observation	179
5.2.4.1	System Observation	179
5.2.4.2	Equipment Layout/Access	182
5.2.4.3	Consumed Equipment	183
5.2.4.4	General Housekeeping	184
5.3	Problem Diagnosis and Corrective Measures	185
5.3.1	Problem Diagnosis	185
5.3.1.1	Gas Handling and Treatment	186
5.3.1.2	Reagent Preparation and Feed	196
5.3.1.3	Waste Solids Handling and Disposal	206
5.3.2	Corrective Actions	212
5.3.2.1	Gas Handling and Treatment	213
5.3.2.2	Reagent Preparation and Feed	220
5.3.2.3	Waste Solids Handling and Disposal	222
6.	Model O&M Plan	225
6.1	Management and Staff	225

CONTENTS (continued)

	Page
6.1.1 Corporate Organization	226
6.1.2 Plant Organization and Training	226
6.2 Operating Manuals	231
6.3 Maintenance Manuals	234
6.4 Troubleshooting Techniques	236
6.5 Spare Parts	237
6.6 Work Order Systems	239
6.7 Computerized Tracking System	244
7. Safety	247
7.1 Inhalation of Toxic Gases	247
7.2 Skin Irritation and/or Chemical Burns to the Skin	249
7.3 Exposure to Fugitive Dust	250
7.4 Normal Industrial Safety Practices	251
References	R-1
Appendix A - Glossary of Terminology	A-1
Appendix B - Equations for Converting Pollutant Concentrations to NSPS Units	B-1
Appendix C - FGD System Inspection Checklist	C-1

FIGURES

Number		Page
1.3-1	Lime/Limestone FGD Capacity and Total FGD-Controlled Capacity Through 1992	5
2.1-1	SO_2 Emission Standards for Coal-Fired Units under 1979 NSPS.	10
2.3-1	Basic Lime/Limestone FGD Process Flow Diagram	16
2.4-1	Growth of Operational FGD Capacity for Utilities	23
2.4-2	Typical Fan Designs	31
2.4-3	Venturi Tower Configurations	33
2.4-4	Spray Tower Types	34
2.4-5	Tray Tower and Tray Types	36
2.4-6	Packed Tower and Packing Types	37
2.4-7	Baffle-type Impingement Mist Eliminators	40
2.4-8	FGD System Reheat Schematic Diagrams	41
2.4-9	Simplified Flow Diagram Showing Damper Configurations	44
2.4-10	Different Damper Designs	45
2.4-11	Barge-Based Limestone Handling and Storage System	48
2.4-12	Three Types of Conveying Equipment Used to Transport Lime	49
2.4-13	Two Types of Ball Mills Used in Limestone Slurry FGD Systems	51
2.4-14	Basic Types of Slakers	53

FIGURES (continued)

Number		Page
2.4-15	Diagram Showing Components of a Thickener	56
2.4-16	A Rotary-Drum Vacuum Filter	58
2.4-17	Components of a Settling Centrifuge	59
2.4-18	Examples of Pond Types for Waste Disposal	62
2.5-1	Major Material Flows in FGD Systems	75
4.2-1	Isometric View of a Typical Centrifugal Fan	125
4.2-2	Typical Tray Tower Absorber	128
4.2-3	Typical Mist Eliminator Section	130
4.2-4	Isometric View of a Typical Thickener	143
4.2-5	Typical Slurry Recycle Centrifugal Pump	150
5.2-1	Typical Specific Gravity of Absorber Recirculation Slurry for Lime/Limestone FGD System	165
5.2-2	Reagent Requirement Calculation	167
5.2-3	Sludge (Waste) Production Calculation	168
5.2-4	Fan Power Requirements	175
5.2-5	Recirculation Pump Power Requirements	176
5.2-6	Example Operation Log Sheet	177
5.2-7	Example Operation Log Sheet	178
5.2-8	Example of a Handwritten Work Order Form	180
5.2-9	Example of a Computer-Generated Work Order Form	181
5.3-1	Gas Handling and Treatment Subsystem Arrangements	187
5.3-2	Reagent Preparation and Feed Subsystem Arrangements	198

FIGURES (continued)

Number		Page
5.3-3	Waste Solids Handling and Disposal Subsystem Arrangement	207
6.1-1	Organizational Diagram for Coordinated FGD System O&M Program	229
6.2-1	Outline for FGD Operating Manual	233
6.3-1	Outline for FGD Maintenance Manual	235

TABLES

Number		Page
2.2-1	Fuel Properties of Four Representative Coals	14
2.4-1	Typical Characteristics of First, Second, and Third Generation Lime/Limestone Slurry FGD Systems	27
2.4-2	FGD Subsystems Requiring Tanks	54
2.4-3a	Design and Operating Data for Operational Utility Lime/Limestone Slurry FGD Systems in the U.S. (General Data)	64
2.4-3b	Design and Operating Data for Operational Utility Lime/Limestone Slurry FGD Systems in the U.S. (Specific Data)	68
2.5-1	Major Power Plant Considerations	73
2.5-2	Summary Listing of the FGD Subsystems by Major Equipment Area	76
2.5-3	Subsystem Outage Times in Module Equivalent Hours (MEH)	78
2.5-4	Summary of Failure Mode Analysis	84
3.2-1	pH Instrumentation on Lime Slurry FGD Systems	105
3.2-2	pH Instrumentation on Limestone Slurry FGD Systems	106
3.3-1	Summary of Manual Emissions Measurement Methods for an FGD System on a Coal-Fired Utility Boiler	109
3.3-2	Principles Used in Gaseous Emission Monitors	112
3.3-3	CEM System Components	113
4.1-1	General Plant Data	122

TABLES (continued)

Number		Page
4.2-1	Control Room Checklist	124
4.2-2	Fan Checklist	126
4.2-3	Scrubber/Absorber Checklist	129
4.2-4	Mist Eliminator Checklist	132
4.2-5	Reheater Checklist	133
4.2-6	Ductwork/Damper Checklist	135
4.2-7	Reagent Conveyor Checklist	137
4.2-8	Ball Mill Checklist	139
4.2-9	Slaker Checklist	140
4.2-10	Tank Checklist	141
4.2-11	Thickener Checklist	144
4.2-12	Vacuum Filter Checklist	145
4.2-13	Centrifuge Checklist	146
4.2-14	Waste Processing System Checklist	147
4.2-15	Waste Disposal System Checklist	149
4.2-16	Pump and Valve Checklist	151
5.2-1	Design Gas-Side Pressure Drops for Absorbers in Operational Lime/Limestone FGD Systems	161
5.2-2	Design Gas-Side Pressure Drops for Mist Eliminators in Operational Lime/Limestone FGD Systems	162
5.2-3	Makeup Water Consumption Rates for Operational Lime/Limestone FGD Systems	171
5.2-4	Energy Requirement Calculations	173
6.6-1	Work Order Priority System	242

METRIC CONVERSIONS

This manual expresses measurements in English units so that information is clear to the intended audience in the United States. The following list provides factors for conversion to metric units.

To convert from	To	Multiply by
Btu	kWh	0.0002931
Btu/lb	kJ/kg	2.326
cfm	m^3/h	1.70
°F	°C	(°F - 32)/1.8
ft	m	0.305
ft/h	m/h	0.305
ft/s	m/s	0.305
ft^2	m^2	0.0929
ft^3	liters	28.32
ft^3	m^3	0.02832
gal	liter	3.785
gal/ft^3	$liter/m^3$	0.134
gal/min	liter/min	3.79
gr	g	0.0648
gr/scf	g/Nm^3	2.29
hp (mechanical)	kW	0.7457
hp (boiler)	kW	9.803
in.	cm	2.54
in. H_2O	kPa	0.2488
$in.^2$	m^2	0.0006452
$in.^3$	m^3	0.00001639
lb	g	453.6
lb	kg	0.4536
$lb/10^6$ Btu	g/kJ	429.9
lb/ft^3	kg/m^3	16.02
lb/gal	kg/m^3	119.8
$lb/in.^2$	kPa	6.895
lb-mol	g-mol	453.6
lb-mol/h	g-mol/min	7.56
lb-mol/h per ft^2	g-mol/min per m^2	81.4
lb-mol/min	g-mol/s	7.56
scfm (at 60°F)	Nm^3/h (at 0°C)	1.61
ton	kg	907.2

ACKNOWLEDGMENT

This manual was prepared under the sponsorship of several divisions of the U.S. Environmental Protection Agency. Those who provided guidance and coordination were Theodore G. Brna and Julian W. Jones, Air and Energy Engineering Research Laboratory; Norman Kulujian, Center for Environmental Research Information; and Kirk Foster and Sonya Stelmack, Stationary Source Compliance Division, Technical Support Branch. The PEI Project Director was Bernard A. Laseke and the PEI Project Manager was E. Radha Krishnan. The PEI principal investigators were Messrs. Ronald S. McKibben and Michael T. Melia.

SECTION 1
INTRODUCTION

1.1 PURPOSE

The purpose of the Flue Gas Desulfurization Inspection and Performance Evaluation Manual is to provide guidance to Federal and state environmental regulatory personnel involved in the inspection and permitting of flue gas desulfurization (FGD) systems for electric utility coal-fired steam generators (boilers) in the United States.

The primary intended user of this manual is the field inspector directly involved in the inspection of operational, FGD-equipped, coal-fired, utility boilers. For the purposes of the manual, the field inspector is defined as the individual who periodically inspects power plants to ensure compliance with emission standards. The scope of the inspector's responsibility is defined as ranging from confirmation of existing status reports to anticipation of future compliance status (i.e., avoidance of potential noncompliance episodes).

A secondary intended user of this manual is the environmental regulatory agency permitter. For the purposes of the manual, the permitter is defined as the individual who reviews permit applications for new capacity in accordance with adherence to environmental regulations and emission standards. Although the permitter is not specifically "targeted" in the manual, pertinent orientation material is presented on the design, operating, and performance characteristics of FGD systems.

1.2 APPROACH

The philosophy adopted for the preparation of this manual is unique in comparison to other FGD technology manuals. As stated,

one of the intended user groups is environmental regulatory personnel. Other similar manuals generally define their intended users as the owner/operator utility, architect-engineer, research firm, and/or technology investigator. This manual represents the first of its kind in addressing solely the needs of environmental regulatory agency personnel.

Another unique feature of this manual is its intended use. The manual is structured as a "tool", or working document, which will accompany the inspector on each plant inspection. This contrasts to the use of other similar manuals in that they are often read and then filed away for possible future reference. To adequately serve as a working document, two major objectives must be accomplished in the organization of the material. First, the document must provide practical information tailored to its intended use, namely, the systematic inspection of an FGD system to determine present and future compliance status. This requires that information on process theory be limited to a necessary minimum. Secondly, the information must be presented in a "user-friendly" format in order to encourage use. This is accomplished through the use of nomographs, checklists, matrices, simplified diagrams, cross-referencing and indexing of textual information, and by presenting important guidelines and recommendations in a conspicuous fashion.

A final unique feature of the manual is its use for the interpretation of sulfur dioxide (SO_2) excess emission reports. If an FGD-equipped boiler represents a source of frequent SO_2 excess emission reporting, the manual will provide guidelines to determine the cause and to evaluate the remedial actions to be taken by the plant operator. If an FGD-equipped boiler represents a source of infrequent SO_2 excess emission reporting, the manual will provide guidelines to identify the contributing factors that are associated with this situation.

1.3 SCOPE AND CONTENT

The scope of the manual is devoted exclusively to lime/limestone slurry FGD processes. Flue gas desulfurization systems are generally the last pieces of equipment used to handle the boiler flue gas before it reaches the stack. In lime/limestone slurry processes, SO_2 in the flue gas stream is removed with the aid of dilute limestone or lime slurries. The treated flue gas is cooled and saturated with moisture in the process. A more thorough description of the processes is presented in Section 2 (Section 2.3, Basic Principles of Lime/Limestone Slurry Processes; Section 2.4, FGD System Design Configurations).

The scope of FGD technology addressed in this manual is limited to tail-end, "wet" lime/limestone slurry processes only, excluding:

- all tail-end processes that do not use calcium-based (lime/limestone) additives as the SO_2 reactant (e.g., sodium/calcium [dual or double alkali], sodium/thermal regeneration [Wellman-Lord], magnesium oxide [Mag-Ox], and sodium [once-through soda ash, sodium hydroxide, trona, nahcolite]).

- all tail-end processes that do not completely saturate the flue gas during treatment, known as "dry scrubbing" (spray drying, dry sorbent injection).

- precombustion and in-situ (combustion) SO_2 control techniques which may involve the use of calcium alkali additives (e.g., limestone injection multistage burner [LIMB], lime furnace injection).

The rationale for emphasizing lime/limestone slurry processes is based on their widespread use in the power industry because of their level of process development and economics. Since the early application of FGD to control SO_2 emissions from boiler flue gas, there has been pronounced preference for lime/limestone slurry processes (see Section 2.4.1.1; Historical Perspective). Presently, plants equipped with FGD systems using lime or limestone slurry represent over 80 percent of the electric generating capacity with emissions controlled by FGD. A perspective of the historical and projected future application of lime/limestone

slurry processes is illustrated in Figure 1.3-1. It shows the installed capacity controlled by lime/limestone slurry processes as a function of the capacity controlled by all processes.

Detailed cost studies indicate that both the capital and the annual costs are generally less than those of other FGD processes. Additionally, the on-line experience of commercial systems at utility plants has generated a wealth of operational data which are being used to enhance system reliability. Advances in waste disposal technology, such as forced oxidation to produce more easily dewatered calcium sulfate, have enabled utility operators to reduce the volume of waste for disposal as well as improving its handling and disposal properties. Advances in process chemistry, such as magnesium salts and organic acid additives, have enabled operators to improve performance with respect to SO_2 removal, process chemistry, service time, and cost effectiveness. With continuing technological advances and increasingly wider utilization, lime/limestone slurry processes are considered the major means of compliance with New Source Performance Standards promulgated by the U.S. Environmental Protection Agency (EPA) for control of SO_2 emissions from power plants (see Section 2.1.1; Air Emission Standards).

The scope of the manual is the complete battery limits of the entire FGD process. These boundaries are defined from the inlet gas stream to the final waste disposal site. All operations in between are examined, including gas handling and treatment, reagent preparation and feed, and waste solids handling and disposal. Moreover, operations and factors that influence the FGD process envelope are considered, including coal characteristics and consumption, boiler design and operation, and particulate emissions control and operation.

1.4 ORGANIZATION OF THE MANUAL

The manual is structured in accordance with its overall purpose of providing a constant companion to the environmental

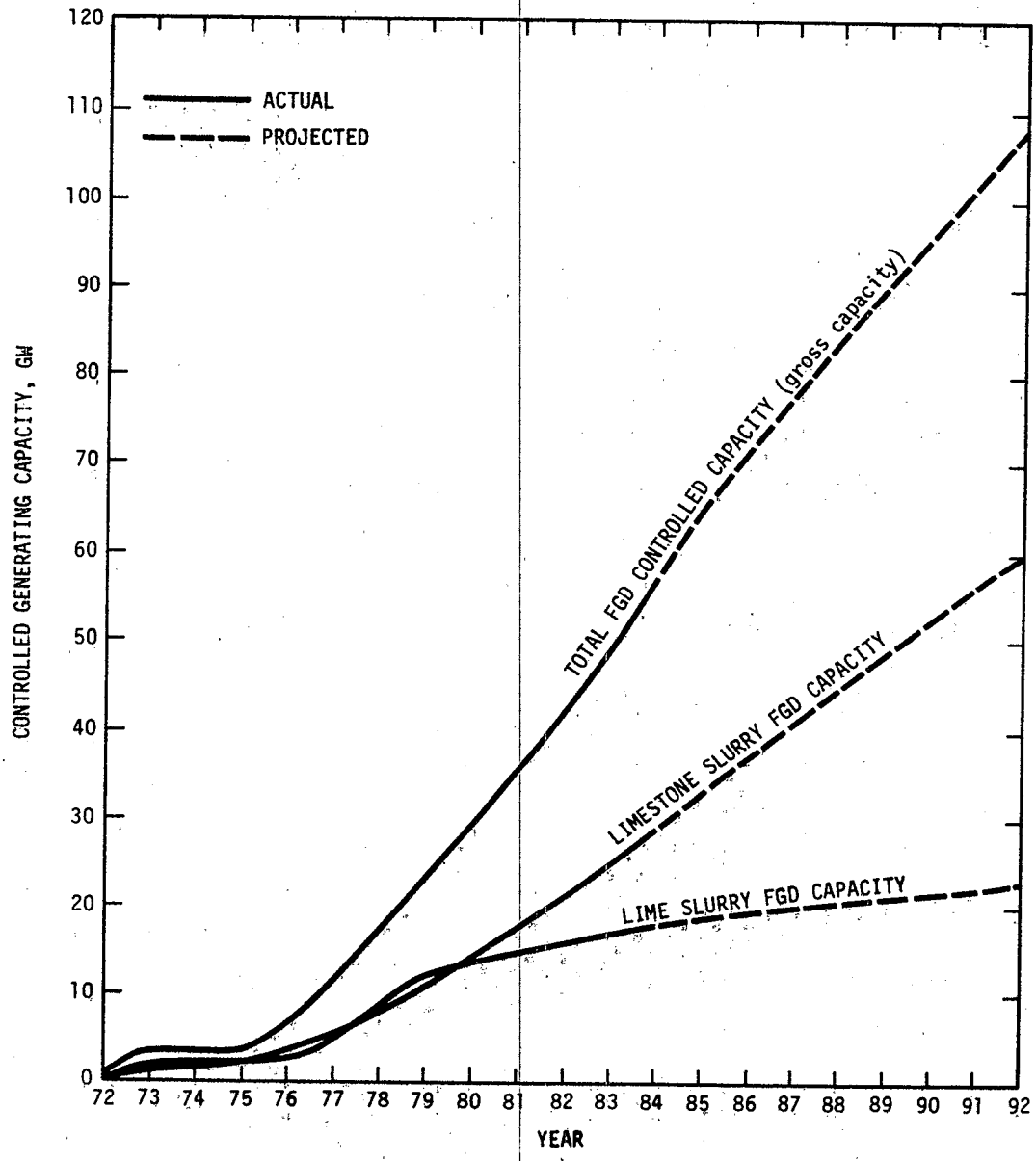

Figure 1.3-1. Lime/limestone FGD capacity and total FGD-controlled capacity through 1992.[a]

[a]Totals reflect end of year values.

regulatory agency inspector of FGD-equipped, coal-fired, utility boilers. At the outset, therefore, an overview of lime/limestone FGD technology is presented (see Section 2). Next, a review of the environmental regulations which govern utility coal-fired boilers and, in effect, have driven the commercial application of FGD technology is provided. A description of lime/limestone slurry processes including process theory and basic principles, system and equipment configurations, and operation and maintenance considerations is also discussed.

In succeeding sections, the practical guidelines associated with inspection and performance evaluation are presented. Section 3 deals with FGD performance monitoring, starting with key operating parameters and their measurement. Particular attention is given to continuous emission monitoring procedures and manual test methods for determining compliance with SO_2 standards. Section 4 is the focal point of the manual--inspection methods and procedures. This information is provided in a series of step-by-step detailed procedures. Section 5 continues with guidelines on how to use and interpret the data observed and collected by the inspector with respect to performance evaluation, problem diagnosis, and correction. Section 6 describes guidelines for general operation and maintenance (O&M) practices based on acceptable "industry standards" that are necessary for high performance levels. Operating practices and maintenance practices are described separately and in detail by component, equipment, subsystem, sequence, roles, and activities. The guidelines are used to develop a model O&M plan summarizing the important aspects of an adequate O&M program that should be practiced by the owner/operator utility in order to achieve satisfactory performance. Section 7 briefly addresses safety procedures and precautionary measures which should be adhered to during the course of a plant inspection.

The appendices consist of supplementary reference material, giving more specific details concerning the topics discussed in

Sections 2 through 7. The appendices are devoted to definitions of FGD terminology, calculation sheets, and example checklists which will be used by the inspector during a plant inspection. The inspector may wish to reproduce and make several copies of the checklists and keep them separate for the purpose of conducting an inspection. As the inspector becomes more experienced and relies less on the manual, he or she may be able to tour the facility without carrying the manual throughout the powerplant.

SECTION 2

LIME/LIMESTONE FGD TECHNOLOGY

This section presents a discussion of lime/limestone slurry FGD technology. The overview includes a discussion of 1) pertinent environmental regulations, 2) coal properties and flue gas characteristics, 3) basic principles of lime/limestone slurry processes, 4) design configurations, and 5) operation and maintenance considerations. Appendix A presents a glossary of FGD-related terms used in this manual.

2.1 ENVIRONMENTAL REGULATIONS

2.1.1 Air Emission Standards

The 1970 Clean Air Act required the U.S. EPA to set air quality goals for a list of priority pollutants. In December 1971, under Section 111 of the Clean Air Act, New Source Performance Standards (NSPS) were issued to limit emissions of SO_2; particulate matter; and nitrogen oxides (NO_x) from new, modified, and reconstructed fossil fuel-fired steam generators used in electric utility and large industrial facilities. In 1977, amendments were made to the Clean Air Act, directing the EPA to tighten emission standards for new coal-fired utility and large industrial boilers, resulting in the revised NSPS of June 1979. In addition to the NSPS, air emissions from coal-fired utility boilers are also governed by the State Implementation Plans (SIP) and the Prevention of Significant Deterioration (PSD) program.

2.1.1.1 1971 NSPS. These standards apply to fossil fuel-fired steam generating units capable of firing more than 250 million Btu/h heat input (to the boiler) and upon which construction commenced after August 17, 1971.

- SO_2 Standards. Sulfur dioxide emissions are limited to 1.2 lb/10^6 Btu heat input.

- Particulate Standards. Particulate emissions are limited to 0.10 lb/10^6 Btu heat input.

- NO_x Standards. Nitrogen oxide emissions are limited to 0.70 lb/10^6 Btu heat input.

2.1.1.2 1979 NSPS. These standards apply to electric utility steam generating units capable of firing more than 250 million Btu/h heat input of fossil fuel (alone or in combination with other fuels) and upon which construction commenced after September 18, 1978.

- SO_2 Standards. Sulfur dioxide emissions are limited to a maximum of 1.2 lb/10^6 Btu heat input. In addition, a percentage reduction in SO_2 emissions (based on the sulfur content and heating value of the fuel) must be achieved. Figure 2.1-1 depicts the allowable SO_2 emissions under the NSPS for different sulfur levels via a sliding percentage removal scale. The percentage reduction must be at least 70 percent under all conditions, and the SO_2 emission rate must not exceed 0.60 lb/10^6 Btu unless at least a 90 percent reduction is achieved. Compliance with these requirements is determined on the basis of a 30-day rolling average and is determined with continuous emission monitors.

- Particulate Standards. Particulate emissions are limited to 0.03 lb/10^6 Btu heat input. The opacity standard limits the opacity of emissions to 20 percent (6-minute average). Compliance with the particulate standards is determined through performance tests. Continuous monitors are required to measure and record the opacity of emissions.

- NO_x Standards. Nitrogen oxide emissions are limited to 0.60 lb/10^6 Btu heat input for bituminous coals, 0.50 lb/10^6 Btu for subbituminous coals, and 0.60 lb/10^6 Btu for most lignites. Continuous compliance is determined on the basis of a 30-day rolling average.

2.1.1.3 State Implementation Plans. State and local standards for SO_2, particulates, and NO_x, aimed at achieving and maintaining national ambient air quality standards (NAAQS), are promulgated under the SIP's required under the Clean Air Act. Where

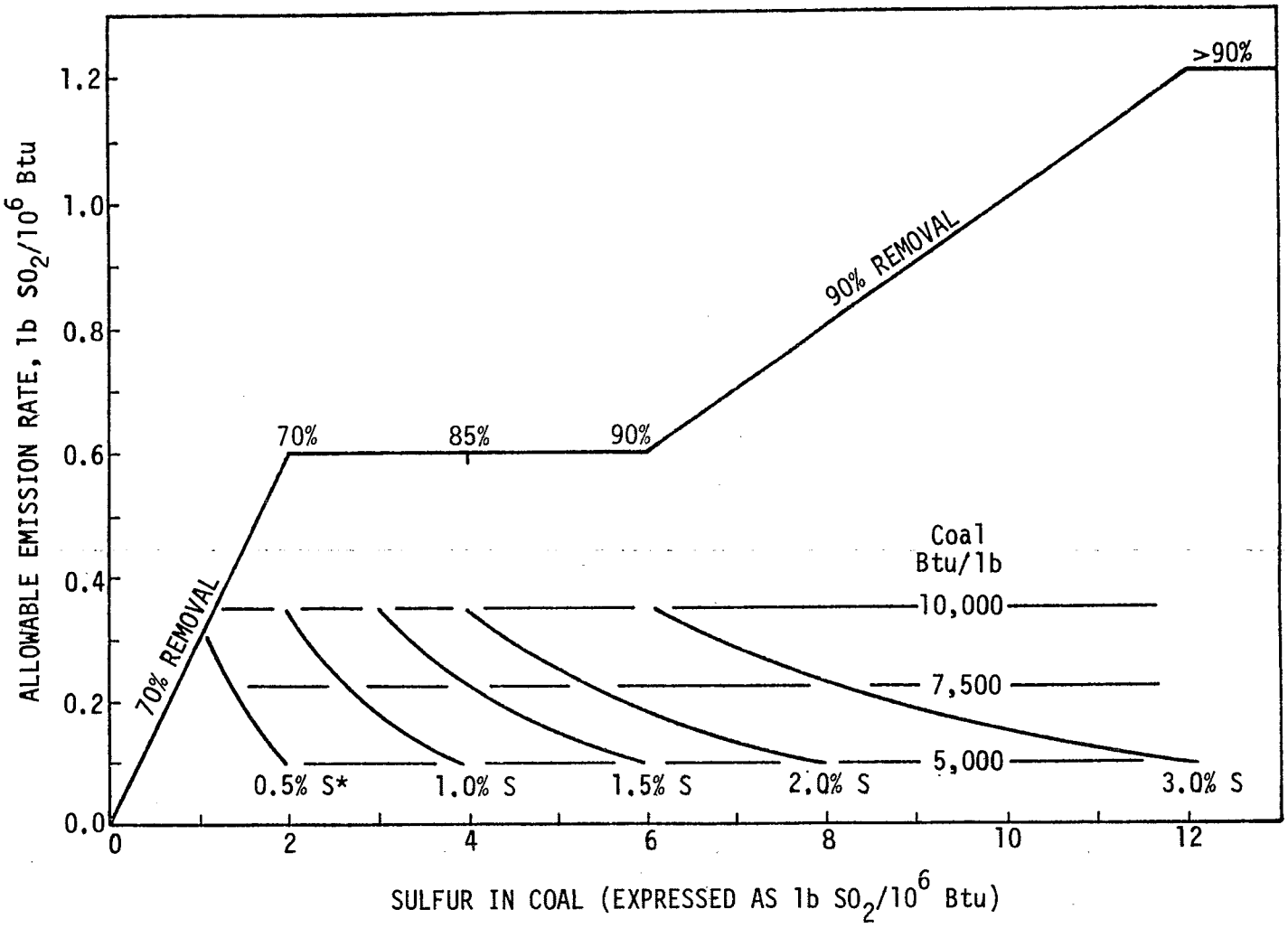

*Sulfur content of coal expressed in percent as opposed to lb/10^6 Btu given in graph along the x-axis.

Figure 2.1-1. SO_2 emission standards for coal-fired units under 1979 NSPS.

state and local regulations are more stringent than Federal NSPS, they govern emission limits from coal-fired steam generating units. A number of states have set the maximum SO_2 emission limit below 1.2 $lb/10^6$ Btu heat input for designated areas within the state (if not statewide). Differences may also be encountered in particulate and NO_x standards.

2.1.1.4 Prevention of Significant Deterioration. The 1977 Clean Air Act Amendments incorporate specific sections regarding PSD of ambient air quality in areas and regions where the air quality is better than standards. The PSD regulations are implemented by the individual states through the SIP's on a case-by-case basis.

Under the PSD program, clean areas of the nation (i.e., those where pollutant levels are below the NAAQS) are classified as Class I, II, or III, with each class representing a specific amount or increment of allowable deterioration. Class I increments permit only minor air quality deterioration, Class II increments permit moderate deterioration consistent with normal growth, and Class III increments permit considerably more deterioration. In no case, however, can the deterioration reduce the area's air quality below that permitted by the NAAQS.

In addition to the increment concept and classification system, PSD regulations require that each major new or modified source apply Best Available Control Technology (BACT). Best Available Control Technology is determined on a case-by-case basis for each pollutant; it must represent an emission limitation based on the maximum achievable degree of reduction, taking into account energy, environmental, and economic impacts. At a minimum, BACT must result in emissions not exceeding any applicable NSPS or National Emission Standards for Hazardous Air Pollutants (NESHAP). The PSD regulations also provide further protection for Class I or "pristine" areas in terms of "air quality related values", such as visibility.

2.1.2 Water and Solid Waste Standards

Local, state, and Federal regulations relating to water pollution or land use also affect the design of an FGD system.

2.1.2.1 Water Regulations. The Clean Water Act of 1977 regulates the discharge of power plant effluents into any natural water bodies. . Under the Federal Clean Water Act and similar state laws, every discharge of pollutants into surface water must be sanctioned by a permit, referred to as the National Pollutant Discharge Elimination System (NPDES) permit.

2.1.2.2 Resource Conservation and Recovery Act. The Resource Conservation and Recovery Act (RCRA) of 1976 governs the development of programs for environmentally safe solid waste disposal including both hazardous and nonhazardous wastes, including sludges as well as solids. Flue gas emission control waste generated from the combustion of coal or other fossil fuels falls under the Act's definition of a solid waste. However, it is temporarily excluded from Subtitle C classification as a hazardous waste under the 1980 amendment to RCRA, which requires EPA to make a report to Congress on the environmental hazards, if any, posed by the disposal of these wastes. Subtitle D of RCRA concerns the more general problems of waste disposal. Such a status is currently assigned to FGD waste. Under Subtitle D provisions, the management of nonhazardous solid waste remains essentially a state and local function. Subsequent to the submittal of this report, the EPA administrator may make a determination whether these wastes will be regulated under Subtitle C or Subtitle D of RCRA.

2.2 COAL PROPERTIES AND FLUE GAS CHARACTERISTICS

The properties of the coal fired in a utility boiler determine the flue gas characteristics, as well as the degree of SO_2 controls needed for the FGD system. Typical fuel properties of four widely used types of coal from prominent coal reserves in the United States are listed in Table 2.2-1.

The sulfur content and heating value of the coal establish the amount of SO_2 produced during combustion as shown in Figure 2.1-1. The amount of SO_2 produced is typically the most important factor in determining the type and overall design consideration for the FGD system. Other coal properties which can affect FGD system design/operation include chlorine and ash content. The chlorine content of the coal affects the materials of construction and the ability of an FGD system to operate in a closed water loop. Chlorine content is highly variable, ranging from about 0.01 weight percent to more than 0.6 percent. Ash content of coal ranges from less than 3.5 to more than 15 percent. If large quantities of ash are collected in the FGD system (i.e., they are not removed by upstream particulate collection equipment), erosion and plugging of absorber internals and piping may occur. In addition, the extra nonreactive solids may have an adverse impact on the waste solids disposal subsystem. On the other hand, the fly ash of western subbituminous and lignite coals contains sufficient alkalinity to provide some or all of the SO_2 reagent requirements. The principal alkaline species in coal ash which can be used are calcium, magnesium, sodium, and potassium oxides. Fly ash alkalinity has been used in numerous FGD systems for SO_2 absorption.

2.3 BASIC PRINCIPLES OF LIME/LIMESTONE SLURRY PROCESSES

This section provides a brief discussion of the basic principles of lime/limestone slurry process chemistry. Principal chemical reactions are identified and the operational factors associated with process chemistry are defined. The emphasis of this discussion is on practical considerations of importance to the agency inspector. A more thorough description of process design is provided in Section 2.4 (FGD System Design Configurations).

TABLE 2.2-1. FUEL PROPERTIES OF FOUR REPRESENTATIVE COALS

	Wyoming subbituminous		Montana subbituminous		Illinois (raw) bituminous		Gulf Coast lignite	
	Average	Range	Average	Range	Average	Range	Average	Range
Proximate analysis								
Moisture, %	30	28-32	24	23-25	11	10-14	32	30-35
Volatile matter, %	32	30-33	32	30-32	37	32-42	29	NA
Fixed carbon, %	32	30-34	40	40-41	42	37-47	27	NA
Ash, %	6	5-8	4	3.5-6.0	10	10-11	12	10-15
Heating value, Btu/lb	8,000	7,800-8,200	9,200	8,300-10,000	11,000	10,800-11,200	6,800	6,200-7,000
Ultimate analysis (as received), %								
Carbon	48	46-49	55	53-56	60	57-63	41	NA
Hydrogen	3	3-4	4	3-4	4	4-5	3	NA
Nitrogen	0.6	0.5-0.7	0.9	0.8-1.0	1.0	1.1-1.2	0.7	NA
Sulfur	0.5	0.3-0.7	0.5	0.4-0.7	3.9	3.7-4.1	0.8	0.6-0.9
Chlorine	0.03	0.00-0.05	0.01	0.00-0.02	0.10	0.04-0.60	0.1	0.0-0.2
Oxygen (difference)	11.87	9-12	11.59	11-12	10.0	10-11	10.4	NA
Ash analysis, %								
SiO_2	32	28-36	32	25-40	47	42-51	49	NA
Al_2O_3	15	14-17	17	15-20	23	18-24	21	NA
Fe_2O_3	5	4-5	6	5-9	16	15-21	7	NA
TiO_2	1	0.9-1.4	1	1.0-1.1	1	0.8-1.2	1.5	NA
P_2O_5	1	0.2-1.3	1	0.5-1.0	0.1	0.0-0.1	0.3	NA
CaO	23	19-27	15	10-20	6	2-6	9	NA
MgO	5	4-6	5	3-5	0.1	0.1-0.5	2	NA
Na_2O	1	1.0-1.6	7	6-9	1.0	0.9-1.3	2	1-3
K_2O	0.4	0.3-0.6	0.5	0.4-0.6	1.6	1.5-1.7	0.7	NA
SO_3	16	14-19	15	10-20	4	3-5	7	b
Undetermined	0.6		0.5		0.2		0.5	b

NA - Data not available

2.3.1 Process Description

The basic lime/limestone FGD process is shown schematically in Figure 2.3-1. Although there are systems which produce a salable byproduct (i.e., gypsum for wallboard construction), the vast majority use the throwaway process configuration shown in Figure 2.3-1. This type of system is at present considered by the utility industry to be the least expensive to own and operate among all of the commercially available systems.

In the lime/limestone FGD process shown in Figure 2.3-1, flue gas, from which fly ash has been removed in a particulate collection device such as an electrostatic precipitator (ESP) or a fabric filter, is brought into contact with the lime/limestone slurry in the absorber, where SO_2 is removed. The chemical reaction of lime/limestone with SO_2 from the flue gas produces waste solids, which must be removed continuously from the slurry loop. These waste solids are concentrated in a thickener and then dewatered in a vacuum filter to produce a filter "cake" which is mixed with fly ash. The resulting stabilized mixture is then transported to a landfill. This lime/limestone FGD system is called a "throwaway" process because it produces a waste byproduct for disposal rather than for processing to recover salable gypsum.

The principal chemical reactions for the lime/limestone FGD process are presented below according to SO_2 absorption, limestone dissolution, and lime dissolution.

Limestone	Absorption *	Lime
$CaCO_3(s) \rightarrow CaCO_3(aq)$	$SO_2(g) \rightarrow SO_2(aq)$	$CaO(s) + H_2O \rightarrow Ca(OH)_2(aq)$
$CaCO_3(aq) \rightarrow Ca^{++}(aq) + CO_3^{=}(aq)$	$SO_2(aq) + H_2O \rightarrow H_2SO_3(aq)$	$Ca(OH)_2(aq) \rightarrow Ca^{++}(aq) + 2OH^{-}(aq)$
$CO_3^{=}(aq) + H^{+}(aq) \rightarrow HCO_3^{-}(aq)$	$H_2SO_3(aq) \rightarrow HSO_3^{-}(aq) + H^{+}(aq)$	$OH^{-}(aq) + H^{+}(aq) \rightarrow H_2O$
$SO_3^{=}(aq) + H^{+}(aq) \rightarrow HSO_3^{-}(aq)$	$HSO_3^{-}(aq) \rightarrow SO_3^{=}(aq) + H^{+}(aq)$	$SO_3^{=}(aq) + H^{+}(aq) \rightarrow HSO_3^{-}(aq)$
$Ca^{++}(aq) + SO_3^{=}(aq) + \frac{1}{2}H_2O \rightarrow CaSO_3 \cdot \frac{1}{2}H_2O(s)$	$SO_3^{=}(aq) + \frac{1}{2}O_2(aq) \rightarrow SO_4^{=}(aq)$	$Ca^{++}(aq) + SO_3^{=}(aq) + \frac{1}{2}H_2O \rightarrow CaSO_3 \cdot \frac{1}{2}H_2O(s)$
$Ca^{++}(aq) + SO_4^{=}(aq) + 2H_2O \rightarrow CaSO_4 \cdot 2H_2O(s)$	$HSO_3^{-}(aq) + \frac{1}{2}O_2(aq) \rightarrow SO_4^{=}(aq) + H^{+}(aq)$	$Ca^{++}(aq) + SO_4^{=}(aq) + 2H_2O \rightarrow CaSO_4 \cdot 2H_2O(s)$

* g = gas phase; aq = aqueous phase; and s = solid phase

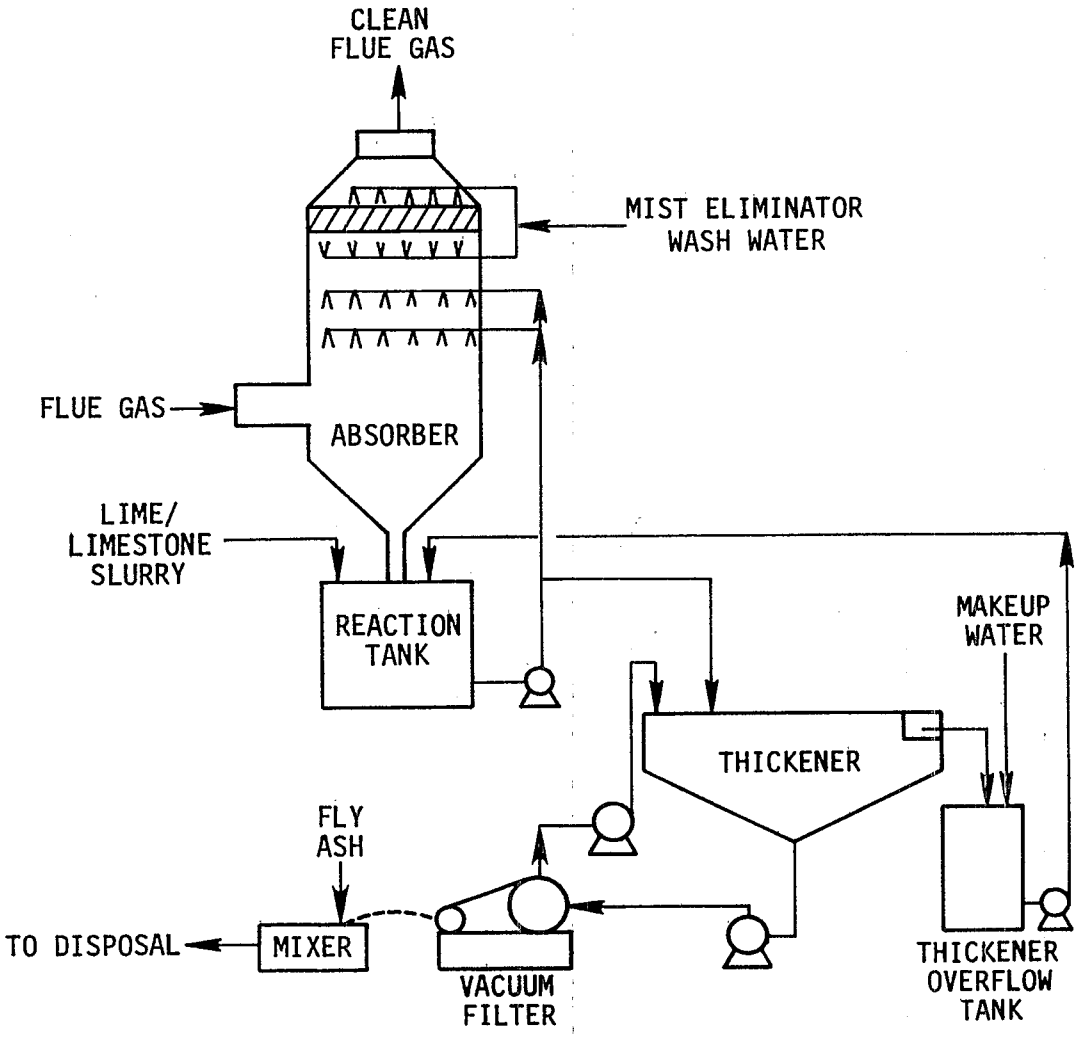

Figure 2.3-1. Basic lime/limestone FGD process flow diagram.

Although not shown in the process flow diagram, the major equipment design difference between the two processes is reagent feed preparation. In the lime process, the reagent is slaked; limestone is ground in a ball mill.

2.3.2 Operational Factors

The basic operational factors one should be acquainted with when inspecting lime/limestone slurry FGD systems are discussed below. Knowing these factors and how they are interrelated with the process chemistry of each system will provide an understanding of how each process functions in addition to providing a set of guidelines to be used during an inspection.

2.3.2.1 Stoichiometric Ratio. The stoichiometric ratio (SR) is defined as the ratio of the actual amount of SO_2 reagent, calcium oxide (CaO), or calcium carbonate ($CaCO_3$) in the lime or limestone feed to the absorber, to the theoretical amount required to neutralize the SO_2 and other acidic species absorbed from the flue gas. Theoretically, one mole of CaO or $CaCO_3$ is required per mole of SO_2 removed (SR = 1.0). In practice, however, it is usually necessary to feed more than the stoichiometric amount of reagent in order to attain the degree of SO_2 removal required. This is because of mass transfer limitations which prevent complete reaction of the absorbent.

If a high SO_2 removal efficiency is required, the absorber may not be able to achieve such removal unless extra alkalinity is provided by feeding excess reagent. The amount of excess reagent required depends upon the SO_2 concentration in the inlet gas, gas flow, percent SO_2 removal required, and absorber design. For lime reagent, the SR employed in commercial FGD systems is 1.05 for newer designs; however, it ranges up to 1.2 for older designs. For limestone reagent, a SR of 1.1 is used in newer designs; however, it may be as high as 1.4 in older designs.[1]

If the reagent feed is too much in excess, the results are wasted reagent and increased sludge volume. Excessive overfeeding can also result in scaling in the form of $CaCO_3$ in the upper part of the absorber for lime systems, and calcium sulfite ($CaSO_3 \cdot \frac{1}{2} H_2O$), sometimes referred to as soft scale, in the lower part of the absorber for limestone systems. Excess reagent can also be carried up into the mist eliminator by entrainment, where it can accumulate, react with SO_2, and form a hard calcium sulfate ($CaSO_4 \cdot 2H_2O$) scale (by sulfite oxidation). This is particularly a problem with limestone systems. Calcium sulfate (or gypsum) scale is especially undesirable because it is very difficult to remove. Once formed, the scale provides a site for continued precipitation. Calcium sulfite scale can generally be easily removed by reducing the operating slurry pH (see Section 2.3.2.3) or rinsing manually with water.

Scale formation is usually more prominent in limestone systems than lime systems, particularly for high sulfur coal applications. Lime systems have a greater sensitivity to pH control because lime is a more reactive reagent. The change in pH across lime systems is more pronounced than in limestone systems partly because limestone dissolves more slowly.

2.3.2.2 L/G Ratio. The ratio of slurry flow in the absorber to the quenched flue gas flow, usually expressed in units of gal/1000 ft^3, is termed the liquid-to-gas (L/G) ratio. Normal L/G values are typically 30 to 50 gal/1000 ft^3 for lime systems[2] and 60 to 100 gal/1000 ft^3 for limestone systems.[3] Lime systems require lower L/G ratios because of the higher reactivity of lime. A high L/G ratio is an effective way to achieve high SO_2 removal; this also tends to reduce the potential for scaling since the spent slurry from the absorber is more dilute with respect to absorbed SO_2. Increasing the L/G ratio can also increase system capital and operating costs because of greater capacity requirements of the reaction tank and associated hold tanks, dewatering

equipment, greater pumping requirements, slurry preparation and storage requirements, and reagent and utility necessities.

2.3.2.3 Slurry pH. Commercial experience has shown that fresh slurry pH as it enters the absorber should be in the range of 8.0 to 8.5 for lime systems[4] and 5.5 to 6.0 for limestone systems.[1] In both FGD processes, as the SO_2 is absorbed from the flue gas, the slurry becomes more acidic and the pH drops. The pH of the spent slurry as it leaves the absorber is in the range of 6.0 to 6.5 for lime systems and 4.5 to 5.0 for limestone systems.[1] In the reaction tank of the absorber, the acidic species react with the reagent and the pH returns to its original fresh slurry value. Slurry pH is controlled by adjusting the feed stoichiometry. Operation of lime/limestone FGD systems at low pH levels, approaching 4.5, will improve reagent utilization but will also lower SO_2 removal efficiency and also increase the danger of hard scale (gypsum) formation because of increased oxidation at lower pH levels (see Section 2.3.2.5). Operation of lime/limestone FGD systems at high pH levels, above 8.5 and 6.0 respectively, will tend to improve SO_2 removal efficiency but also increases the danger of soft scale (calcium sulfite) formation. Hence, control of slurry pH is essential to reliable operation. The inability to maintain sensitive control of the slurry pH can lead to both lowered SO_2 removal efficiencies and hard/soft scale formation.

2.3.2.4 Relative Saturation. In lime/limestone FGD processes, the term "relative saturation" (RS) pertains to the degree of saturation (or approach to the solubility limit) of calcium sulfite and sulfate in the slurry; RS is important as an indicator of scaling potential, especially of hard scale, which can present severe maintenance problems. Relative saturation is defined as the ratio of the product of calcium and sulfate ion activities (measured in terms of concentrations) to the solubility product constant. The solution is subsaturated when RS is less than 1.0, saturated when RS equals 1.0, and supersaturated when RS is greater than 1.0. Generally lime/limestone processes will

operate in a scale-free mode when the RS of calcium sulfate is maintained below a level of 1.4 and the RS of calcium sulfite is maintained below a level of approximately 6.0.[5] Operation below these levels provides a margin of safety to ensure scale-free operation. This is achieved through proper design and control of process variables (e.g., L/G, pH).

2.3.2.5 Oxidation. An important chemical consideration in lime/limestone processes is the oxidation of sulfite to sulfate. Uncontrolled oxidation across the absorber leads to sulfate formation and resultant hard scaling problems on the absorber internals. Sulfite oxidation can occur either naturally or it can be artificially promoted (i.e., forced oxidation). Natural oxidation occurs when sulfite in the slurry reacts with dissolved oxygen (O_2), which has been absorbed either from the flue gas or from the atmosphere (e.g., during agitation in the reaction tank). With forced oxidation, air is bubbled into the absorber reaction tank to further promote oxidation. This prevents the dissolved sulfite in the slurry from returning to the absorber which minimizes the potential for the oxidation of the sulfite to sulfate in the absorber and resultant hard scaling problems. Forced oxidation has additional advantages of reducing the total volume of waste generated because of improved dewatering characteristics of the sulfate solids and improved characteristics of the final solid waste product. Oxidation tends to increase with decreasing slurry pH. For this reason, forced oxidation is normally employed only with limestone systems.

2.3.2.6 Chemical Additives. In recent years, inorganic and organic additives have been used to improve SO_2 removal efficiency, increase reagent utilization, decrease solid waste volume, and decrease scaling potential of lime/limestone FGD systems. Magnesium oxide is the most widely used additive. Dicarboxylic acids, in the form of adipic acid or dibasic acids, are also used commercially.

Magnesium oxide additives permit a higher SO_2 removal rate per unit volume of slurry. This is because the salts formed by the reaction of magnesium-based additives with the acid species in the slurry liquor are more soluble with respect to those of the calcium-based salts. This in turn increases the available alkalinity of the scrubbing liquor, which promotes a higher SO_2 removal rate. Dibasic acids enhance SO_2 removal in a different manner from magnesium additives. Acting as buffers, they tend to neutralize acid-generated hydrogen ions (H^+) which in turn prevents the decrease of the system pH and SO_2 removal. In limestone systems, because of their added ability to enhance utilization by improving dissolution, a lower stoichiometric ratio can be used which reduces limestone addition and the resulting volume of solid waste. In addition, high liquid phase calcium concentrations permitted by the dibasic acids leads to a reduced potential for scaling tendencies in the absorber.[3]

2.4 FGD SYSTEM DESIGN CONFIGURATIONS

This section presents a brief discussion of the development of FGD technology including a historical perspective and a description of the characteristics of technology generation followed by a description of equipment used in existing design configurations. A summary is also included of all operational utility lime/limestone slurry systems in the U.S. by design configuration elements.

2.4.1 Development of Technology

2.4.1.1 Historical Perspective. The rapid expansion in energy demand that occurred starting about 1950 greatly increased the amount of all air pollutants resulting from fuel combustion -- particulates, SO_2, NO_x, carbon monoxide, organic compounds, and trace metals. Because of environmental concern over the increasing concentration of pollutants in the atmosphere in the U.S., the Air Quality Act of 1967 became law. Its aim was to set

emission limitations on those pollutants for which adequate information was believed to be available, i.e., particulates, SO_2, and NO_x. Eventually new regulations came about in the form of the Federal NSPS and state regulations under the individual SIP's. As a result, in the early 1970's, important applications of FGD for SO_2 control were initiated in the U.S.

The 1950's and 1960's were a time of laboratory and pilot plant investigations of new processes. During the 1950's, the Tennessee Valley Authority (TVA) experimented with lime/limestone slurry and dilute acid processes; in West Germany, the first major carbon adsorption processes were developed.

Lime/limestone processes were installed in 1964 on an iron ore sintering plant in the USSR and on a large sulfuric acid plant in Japan in 1966.

In 1966, Combustion Engineering developed a process consisting of dry limestone injection into the boiler followed by wet scrubbing. In the U.S., the first commercial system of this type was installed in 1968; there were five utility installations of this system by 1972. Because of major problems associated with dry limestone furnace injection (e.g., boiler tube fouling, scaling/plugging), these systems proved inadequate. The five systems were either shutdown or converted to tail-end slurry processes.

Significant commercial application of utility FGD systems did not begin in the U.S. until the early 1970's. Figure 2.4-1 shows a yearly status of utility FGD capacity for the past decade and a half.

There has been a continual evolution in the development of FGD technology which is reflected in the improved design and performance levels of these systems, even in an environment of increasingly more stringent emission limitations. Many design configurations found in early systems have since been modified or abandoned. A changing attitude of utilities toward FGD technology has also improved FGD system performance in older systems

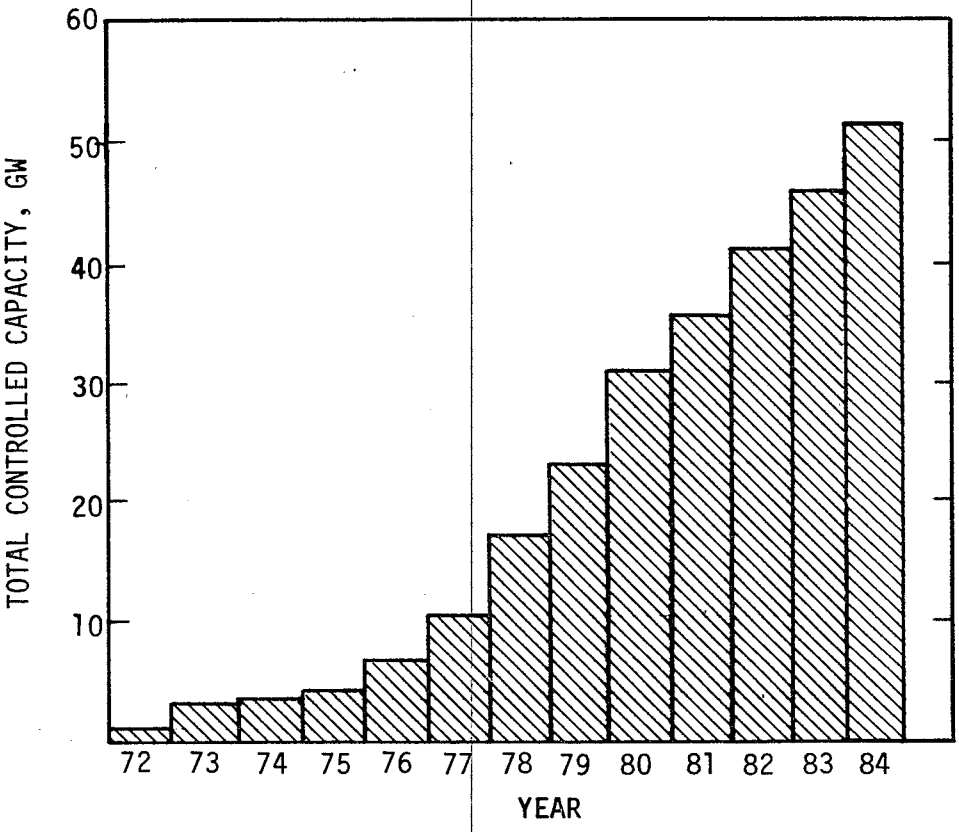

Figure 2.4-1. Growth of operational FGD capacity for utilities.

and, in some cases, improved design. Of particular significance is the attention now directed toward FGD system operating and maintenance practices.

The most noteworthy site for significant research and development work in FGD technology has been the EPA/TVA Shawnee Alkali Scrubbing Test Facility. In June 1968, the U.S. EPA*, through its Office of Research and Development, initiated a program to construct and test prototype lime/limestone slurry systems for removing SO_2 and particulates from flue gases generated in coal-fired boilers. This test program was managed and directed by EPA's Industrial Environmental Research Laboratory†/Research Triangle Park (IERL/RTP). A prototype test complex was integrated into the flue gas ductwork of a coal-fired boiler (Unit 10) at TVA's Shawnee Power Station near Paducah, Kentucky.

At the outset, three major goals were identified for the test program: (1) characterize as completely as possible the effect of important process variables on SO_2 and particulate removal; (2) develop mathematical models to allow economical scale-up of attractive operating configurations to full-size FGD facilities; and (3) perform long-term reliability testing. The test facility was initially commissioned for service in March 1972. The original test program was conducted from March 1972 to May 1974. During this first phase of testing, efforts were concentrated on the characterization of process parameters as they affected SO_2 removal and FGD system reliability.

A second phase of testing, a four-year advanced test program, was initiated in June 1974. The major objectives accomplished during this phase of testing were achieving reliable operation of the FGD system, improved performance, and lower

---

* National Air Pollution Control Association until 1970.

† Designated as Control Systems Laboratory until 1975; redesignated as Air and Energy Engineering Research Laboratory in 1985.

costs. This was accomplished through investigations on chemical additives (see Section 2.3.2.6), system loop configurations, and forced oxidation (see Section 2.3.2.5).

A third phase of testing, which lasted approximately two years, from July 1978 to May 1980, was devoted to enhancing SO_2 removal and improving the reliability and economics of lime/limestone slurry processes through the use of organic acid additives (see Section 2.3.2.6).

Shawnee provided a needed test site to assist in the development and commercialization of conventional and innovative FGD strategies. Shawnee was instrumental in the development of lime/limestone slurry technology from the level of a research and development "tool" to a level of commercial acceptability. Many of the results from the various test programs initiated or refined commercial design strategies, a large number of which are in commercial practice today:

- High utilization/low stoichiometric limestone chemistry and mist eliminator cleanliness
- Spray tower absorber design
- Two-loop scrubbing
- Magnesium additives
- Organic acid additives
- Forced oxidation and gypsum production
- Closed water-loop operation

2.4.1.2 Characteristics of Technology Generation. Although the designation of "generation" is somewhat subjective, FGD systems may be distinguished in accordance with the evolution of technology per the following guidelines:

- First generation: Designs that remove SO_2, and possibly fly ash, with gas contactors developed for or based upon particulate matter scrubbing concepts. Included are lime/limestone slurry processes which use gas contactors with venturi or packing-type internals.

- Second generation: Designs that remove SO_2 primarily in gas contactors developed specifically for SO_2 absorption which utilize features to improve the chemical process through chemical or physical means. Included are lime/limestone slurry processes using additives or spray towers, combination towers, or special reactors.

- Third generation: Improved second generation designs that encompass additional process refinements and are currently under demonstration or early commercial operation. Included are open spray tower designs with spare absorbers, closed water-loop operations, and gypsum production.

Approximately 53 percent of the operational lime/limestone slurry FGD systems on utility boilers in the U.S. can be classified as second generation systems. First generation systems account for 20 percent, while third generation systems account for the remaining 27 percent of the total. Often, a given FGD system will have some characteristics of earlier and/or later generation systems but will be assigned the generation status which most closely represents its particular overall design. Table 2.4-1 summarizes the basic characteristics of the systems within the three generations.

First generation systems are "early" facilities based on particulate scrubber designs modified for SO_2 control. In such systems, particulates and SO_2 are collected simultaneously by venturi, marble bed, or other scrubber/absorber designs in a once-through scrubbing operation having a characteristically high stoichiometric ratio. Spent slurry is piped to a pond without dewatering for final disposal. Typically, little or no water is brought back from the disposal pond to the process for reuse. Fresh makeup water is used instead. Few existing FGD systems fit this description completely. As FGD technology evolved, more effective measures were adopted and modifications were made to earlier systems to upgrade performance.

TABLE 2.4-1. TYPICAL CHARACTERISTICS OF FIRST, SECOND, AND THIRD GENERATION LIME/LIMESTONE SLURRY FGD SYSTEMS

Characteristics	Generation		
	First	Second	Third
Duty	SO_2/fly ash	SO_2	SO_2
Absorber Design	Venturi tower	Tower with internals[a]	Open spray tower
Chemistry	High stoichiometric ratio	Moderate stoichiometric ratio	Low stoichiometric ratio
Water Loop	Open	Closed	Closed with integrated water inventory
Waste Processing	Ponding (no dewatering)	Primary dewatering and waste treatment	Primary and secondary dewatering and solid waste physical/chemical treatment
Redundancy	None[b]	None[b]	Sparing of a number of system components

[a]Some spray towers are also included in late second generation systems.

[b]Most of these systems incorporate minimal redundancy (e.g., pumps); however, spares are usually not provided for major components (e.g., absorbers).

Second generation FGD systems were designed specifically for SO_2 control leaving all or most particulate control to upstream ESP's. The SO_2 absorbers usually contained gas contacting devices to maximize SO_2 collection efficiency and operate at a moderate stoichiometric ratio chemistry. Such systems included primary solids dewatering, some form of solid waste treatment, and on-site waste disposal. Second generation systems characteristically operate in a water loop which more closely approaches closed loop than first generation systems.

Third generation systems are characterized by open spray towers operating at relatively low stoichiometric ratio chemistries with additives for SO_2 absorption enhancement and scale control. These systems also include liberal sparing of key components and incorporate design features which tend to decrease interdependency of various subsystems. This allows full load operation of the system even when individual components are forced out of service or are undergoing routine maintenance. Third generation designs provide secondary dewatering (vacuum filters or centrifuges), solid waste treatment via chemical fixation or forced oxidation, and landfill disposal. An integrated plant water inventory is generally included in these closed loop systems, and liquor collected from the various dewatering devices is recycled and blended with fresh makeup water. The term "closed loop" takes on a slightly different but significant meaning when applied to third generation systems since little water leaves the system via the solid waste. These systems must be designed to withstand the corrosive effects and scaling potential of the increasingly high concentrations of salts that build up in the recycled water. Second generation systems are less sensitive to this problem because water is not recycled as extensively.

2.4.2 Existing Design Configurations

This section describes briefly the important equipment items one is likely to encounter when inspecting a conventional lime/limestone FGD system. Descriptions and diagrams are provided for

each of the equipment items discussed. Operation and maintenance considerations for the equipment described here are presented later in Section 2.5.

The equipment is organized by three major equipment areas:

- Gas handling and treatment
  1. Fans
  2. Scrubbers/absorbers
  3. Mist eliminators
  4. Reheaters
  5. Ductwork and dampers
- Reagent preparation and feed
  1. Reagent conveyors and storage
  2. Ball mills
  3. Slakers
  4. Tanks
- Waste solids handling and disposal
  1. Thickeners
  2. Vacuum filters
  3. Centrifuges
  4. Waste processing
  5. Waste disposal
  6. Pumps and valves

It is noted that there is some overlap of the equipment items in all three areas, although they may be listed only under one equipment area in the above classification. For example, reaction tanks are located in the gas handling and treatment area; pumps and valves are found in all three equipment areas.

Sections 2.4.2.1 through 2.4.2.5 address equipment used in gas handling and treatment, including: fans, scrubbers/absorbers, mist eliminators, reheaters, and ductwork and dampers, respectively. Sections 2.4.2.6 through 2.4.2.9 address equipment used in reagent preparation and feed, including: reagent conveyors and storage, ball mills, slakers, and tanks, respectively. Sections 2.4.2.10 through 2.4.2.15 address equipment used in waste solids handling and disposal, including: thickeners, vacuum filters, centrifuges, waste processing, waste disposal, and pumps and valves, respectively.

2.4.2.1 Fans. The fan moves gas by creating a high or low pressure by mechanical means. Fans are used to draw or push flue gas from the boiler furnace through the FGD system. Fans used in FGD systems may be classified in four basic ways: function, design, application, and service.

- Function refers to service as either a unit fan or booster fan. A unit fan is one that is designed to create draft for the boiler, particulate collection system, and FGD system. A booster fan accommodates only the FGD system. Retrofit FGD systems usually include booster fans since existing unit fans are generally unable to accommodate the pressure drop of the add-on FGD system. Booster fans are also often used for FGD systems that have flue gas bypass capability. Booster fans may be used for individual modules on FGD systems to give better control of the gas passing through them. Unit fans are generally used for new FGD-equipped boilers, particularly installations where flue gas bypass does not exist. Using unit fans allows better balance of the draft throughout the entire unit.

- Fans used for FGD systems are either centrifugal or axial (Figure 2.4-2a and b). Most fans used in FGD systems are of the centrifugal variety. Both fan designs may be equipped with variable-pitch vanes (or blades) which provide more efficient fan operation and better gas flow control.

- Fans are classified as either induced draft (ID) or forced draft (FD). Fans that are installed immediately following a module or system (downstream) that draw gas through the module or system are called ID fans (negative pressure operation). Fans that precede a module or system (upstream) that push gas through the module or system are called FD fans (positive pressure operation).

- Fans may service either a wet or dry gas stream. Fans that precede absorbers generally operate on hot dry flue gas and are classified as dry fans. Fans that are installed downstream of the absorbers and are preceded by a reheater are also classified as dry fans. Fans that are installed either between scrubber and absorber modules or downstream of absorbers but are not preceded by a reheater are classified as wet fans. Most fans used in FGD systems are dry fans.

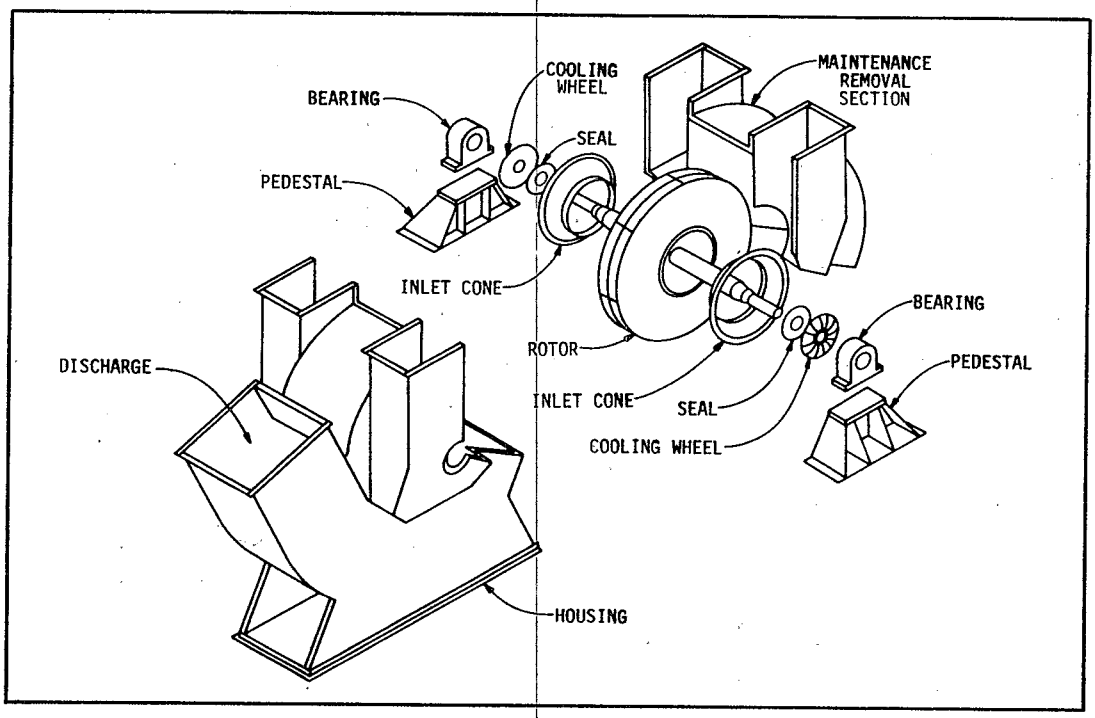

(a)

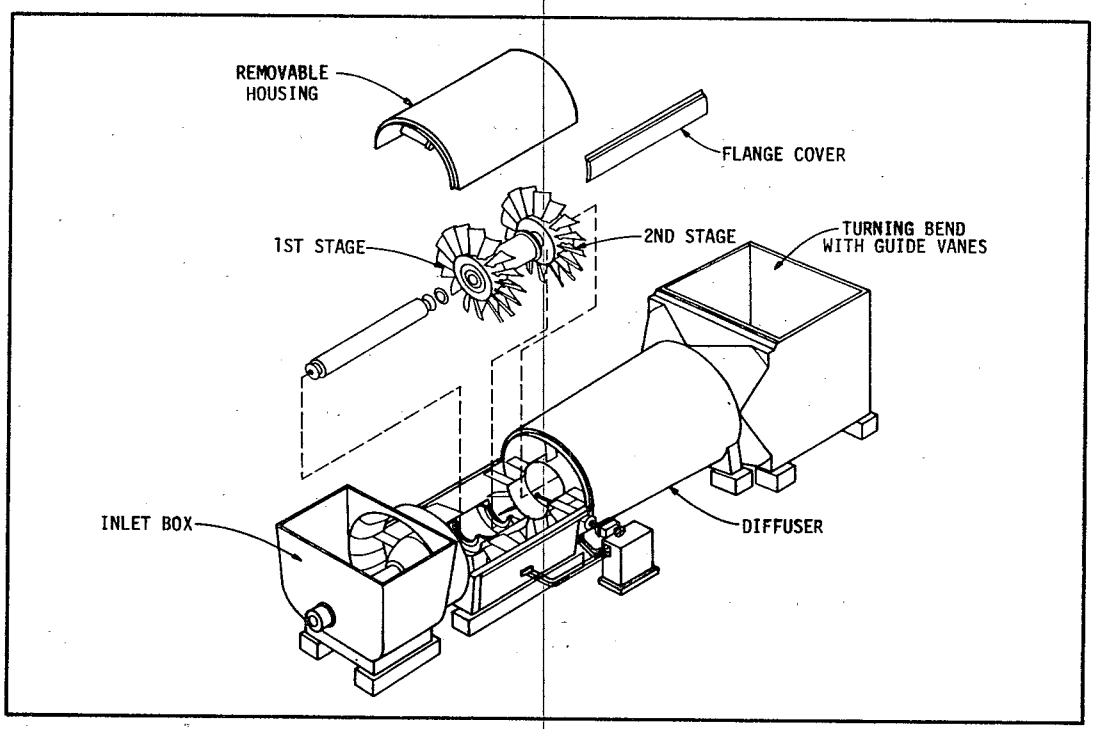

(b)

Figure 2.4-2. Typical fan designs: (a) centrifugal; (b) axial.

2.4.2.2 Scrubbers/Absorbers. Strictly speaking, the term "scrubber" applies to first generation systems which remove both particulate and SO_2. "Absorber" applies to the second and third generation systems which remove SO_2 only, although the term "scrubber" is also used by some for this application. The basic scrubber/absorber types described herein identify the various gas/slurry contacting devices used in the FGD systems.

Figure 2.4-3 presents different venturi tower configurations typically used in first generation systems. In a fixed-throat venturi, the venturi throat opening remains constant (Figure 2.4-3a). However, a number of variable-throat designs are used to control the opening of the venturi throat to accommodate varying gas flows (Figures 2.4-3b through h). Venturi towers are considered high energy devices because they typically operate in a 10 to 30 in. H_2O pressure drop range. They are also limited somewhat as contacting devices for gas absorption because of limited gas/slurry contacting time in the tower.

In spray towers, slurry is introduced into the gas stream from atomizing nozzles, resulting in intimate contact for gas absorption. The pressure imparted to the slurry discharged from the spray nozzles combined with the velocity of the incoming gas stream produces liquid droplets from 50 to 4000 microns in diameter. Low gas-side pressure drops (typically 1 to 4 in. H_2O) are encountered because of the lack of tower internals. The open countercurrent spray tower is a simple configuration in which the gas stream passes vertically upward through the tower with the liquid droplets falling by gravity countercurrent to the gas flow (Figure 2.4-4a). Another spray tower design is the open cross-current spray tower (Figure 2.4-4b). This design requires somewhat less pumping power because the slurry is pumped to a lower height. However, it requires more spatial area for the absorber than vertical designs.

In tray towers, the gas stream enters the base of the tower and passes upward through one or more trays containing openings.

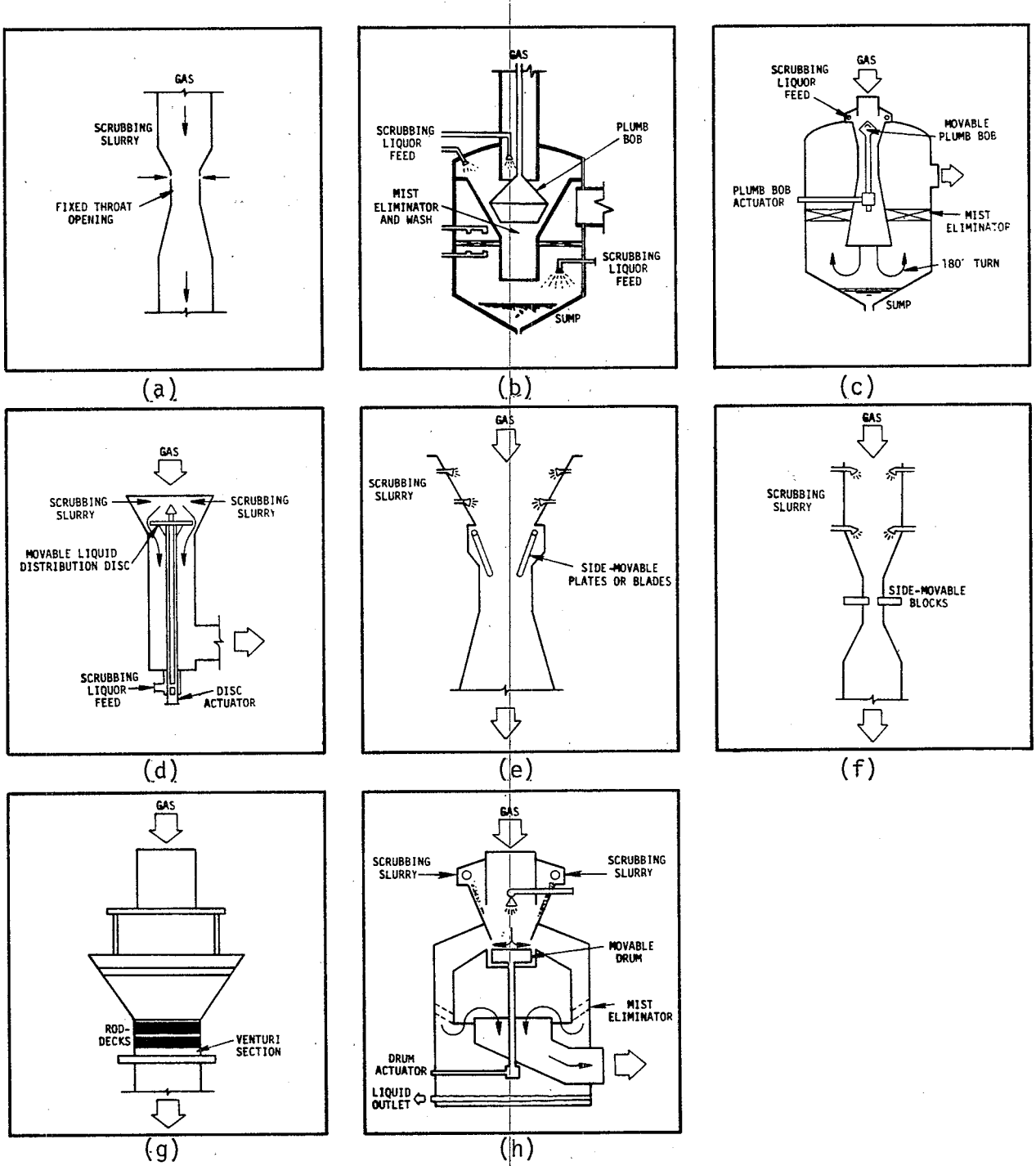

Figure 2.4-3. Venturi tower configurations: (a) fixed-throat; (b) variable-throat top-entry plumb bob; (c) variable-throat bottom-entry plumb bob; (d) variable-throat bottom-entry liquid distribution disc; (e) variable-throat side-variable plates or blades; (f) variable-throat side-movable blocks; (g) variable-throat vertically-adjusted rod decks; (h) variable-throat adjustable-drum.

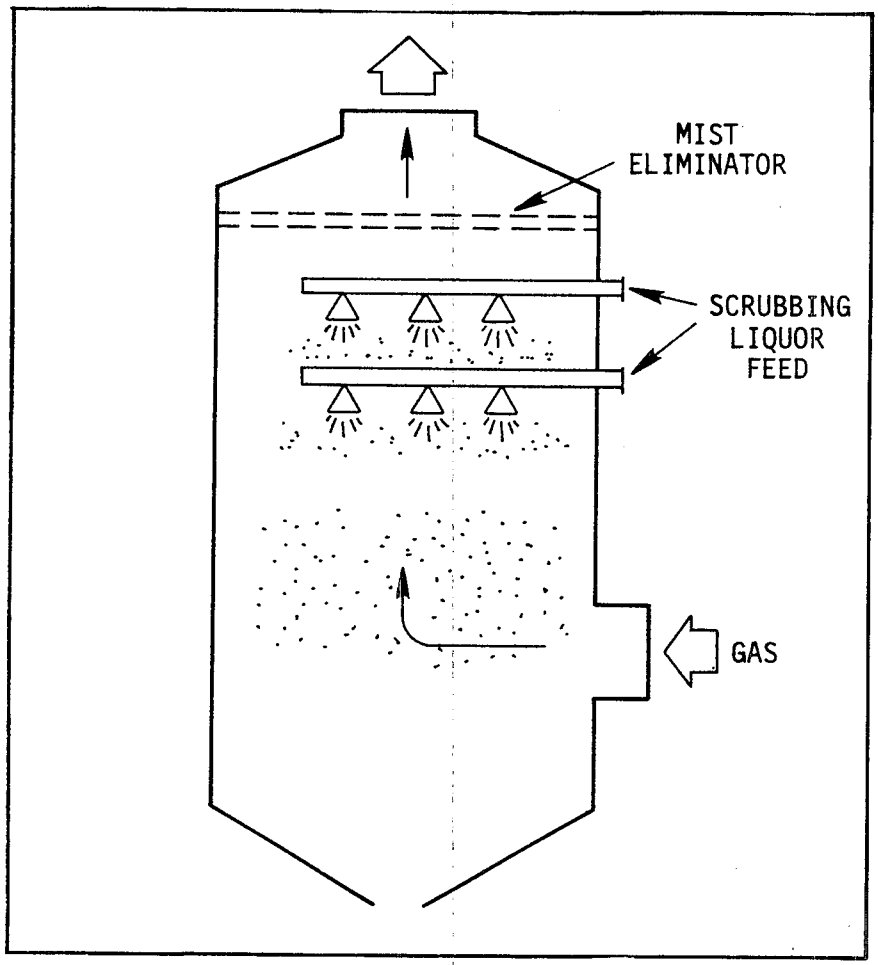

(a)

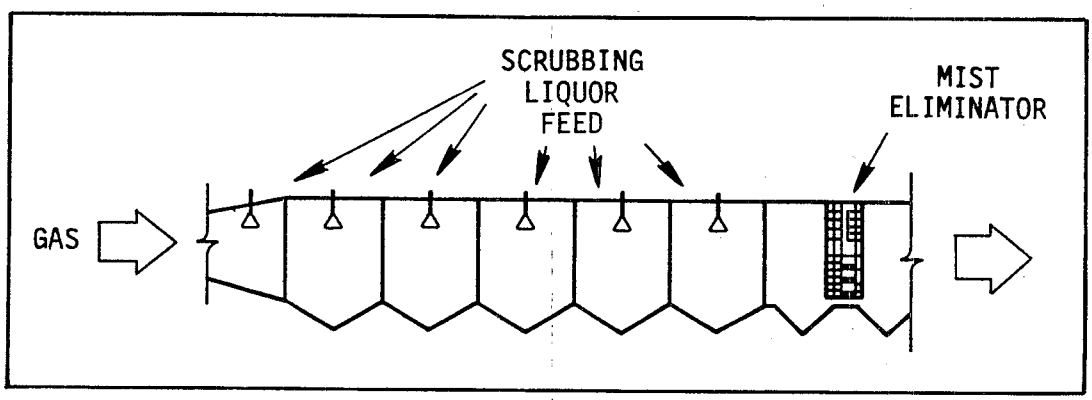

(b)

Figure 2.4-4. Spray tower types: (a) open countercurrent; (b) open crosscurrent.

Slurry is introduced onto the top tray and flows across it and down across each preceding tray (Figure 2.4-5). In a conventional sieve tray tower, gas velocities are used such that the gas passing up through the hole bubbles through the liquid on the tray providing intimate gas/slurry contact (Figure 2.4-5). In a valve tray tower, the tray level consists of a bed of "bubble caps" with each bubble cap surmounted by a constraining spider cage (Figure 2.4-5). The gas flows upward through the caps and the slurry flowing across the tray is kept in a state of constant froth by the gas which exits each cap at venturi velocity. This design, however, is not very common in lime/limestone slurry FGD systems.

In packed towers, the gas enters the base of the tower and passes up through the packing countercurrent to the slurry introduced at the top of the tower (Figure 2.4-6). The packing can be of a variety of different shapes and configurations. The purpose of the packing is to provide a large surface area for intimate gas/slurry contact. Fixed bed consists of a rigid, stationary packing such as a "honeycombed" material (Figure 2.4-6a). Static bed consists of a largely immobile bed of packing, such as glass spheres (Figure 2.4-6b). Mobile bed packing consists of a highly mobile bed of solid spheres which is fluidized by the gas stream (Figure 2.4-6c). Entrained bed packing consists of a mobile bed of solid spheres which are entrained in the gas stream, passed through the tower, and disengaged for recycling (Figure 2.4-6d). Rod decks and grids (Figures 2.4-6e and f) represent internals which can be used instead of packing and still provide a sufficiently large surface area for intimate gas/liquid contact.

In combination towers, two or more separate tower design features described in the foregoing are incorporated into one tower for operation as an integral unit. These combined designs provide flexibility because extreme operating conditions and/or selective removal capabilities can be segregated into discrete

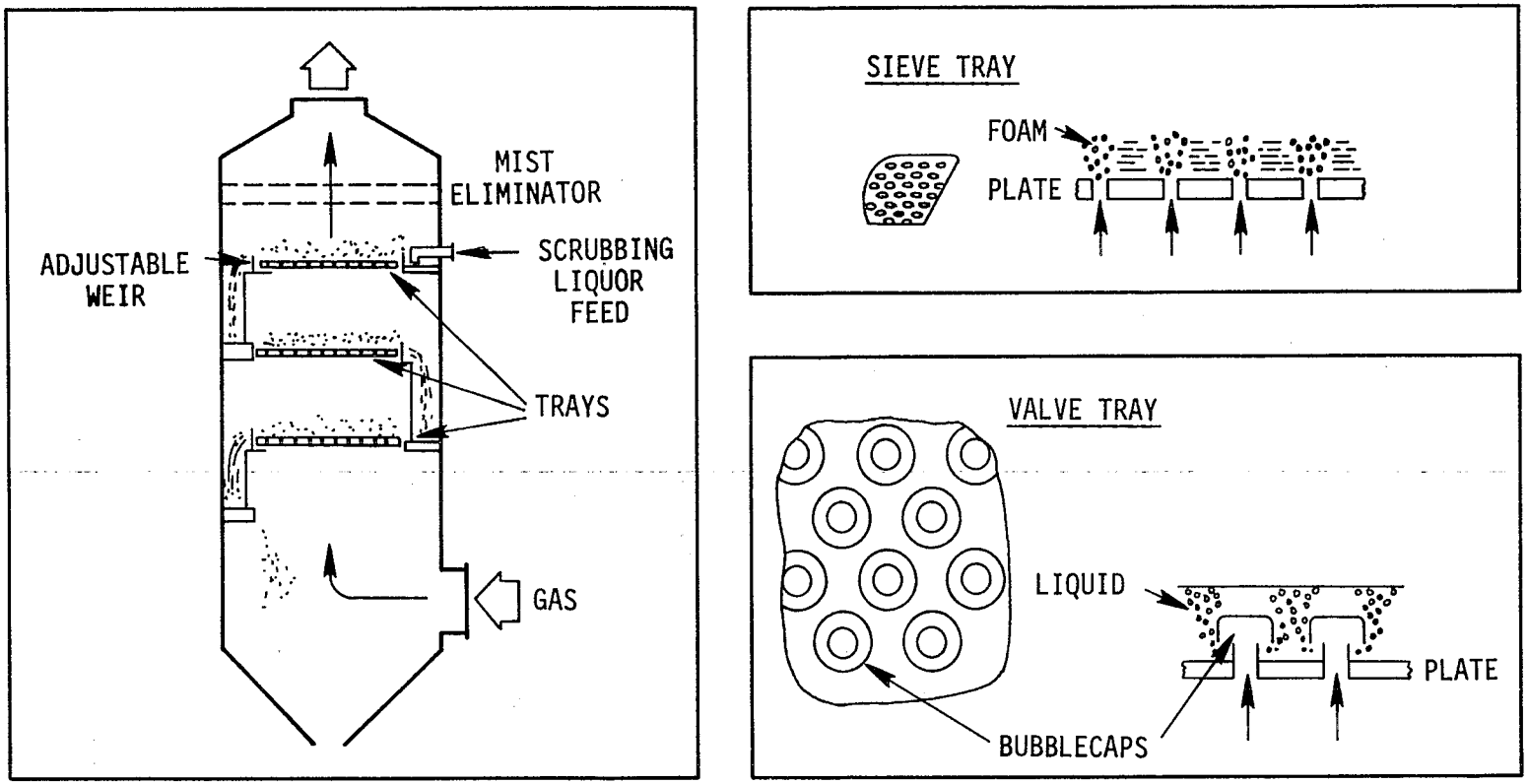

Figure 2.4-5. Tray tower and tray types.

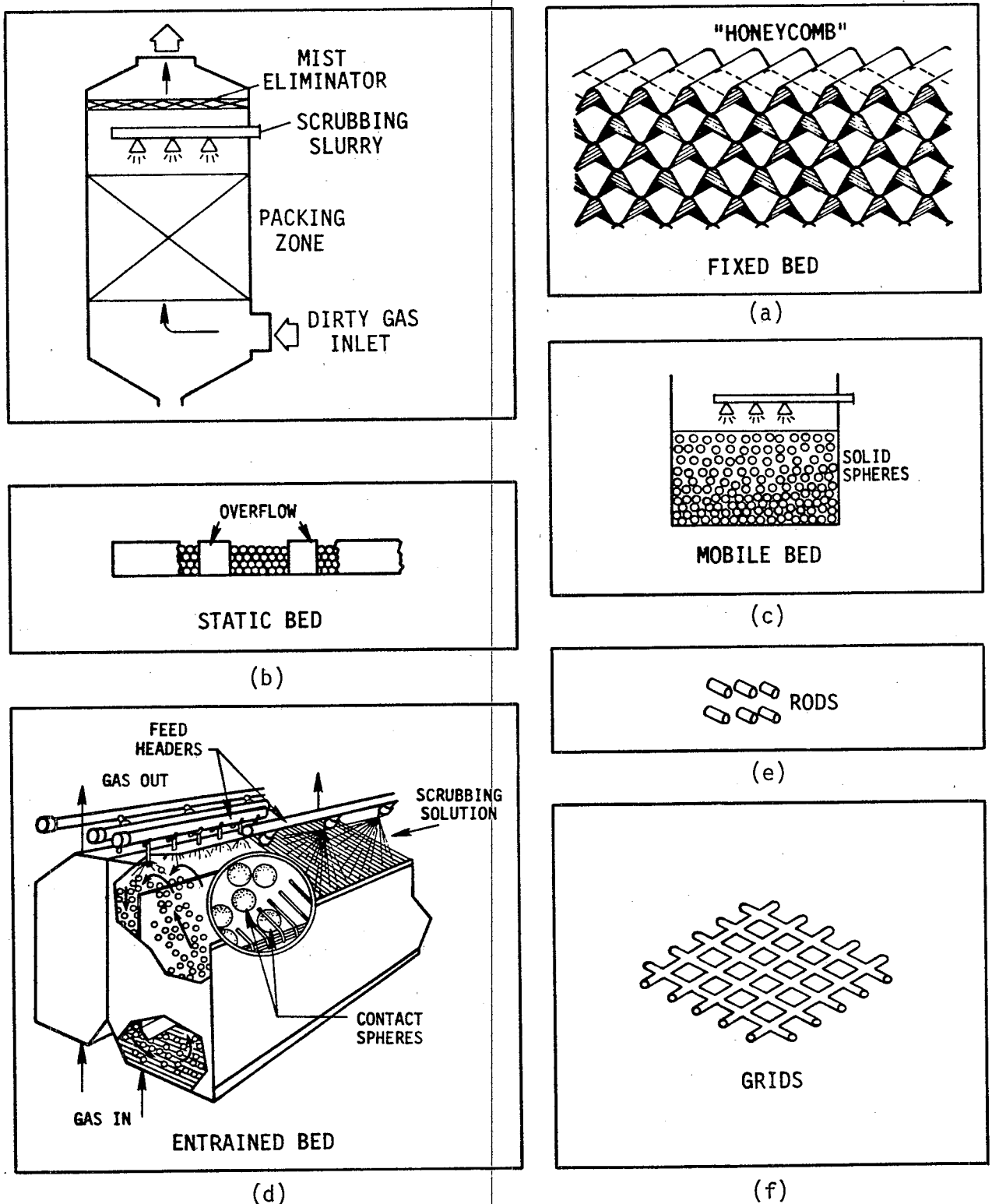

Figure 2.4-6. Packed tower and packing types.

areas of the tower, thus permitting separate chemical and physical conditions to be maintained. Designs which have been developed for commercial application to date include a spray/packed tower and a venturi/spray tower.

2.4.2.3 Mist Eliminators. A mist eliminator removes entrainment introduced into the gas stream by the scrubbing slurry. Entrainment can take the form of liquor droplets, slurry solids, and/or condensed mist.

There are two basic types of mist eliminators used in FGD systems: the precollector and the primary collector. A precollector precedes the primary collector and is designed to remove the larger particle entrainment from the gas stream before it passes through the primary collector. A primary collector typically sees the heaviest duty with respect to entrainment loading and required removal efficiency.

Precollectors are of the bulk separation or knock-out type. Bulk separation is effected by baffle slats, perforated trays, or a gas direction change (90° to 180°). Bulk separation devices are characterized by a low potential for solids deposition, a low gas-side pressure drop, and simplicity. Knock-out type precollectors are either the wash tray or trap-out tray design. Knock-out devices remove large solid and liquid particles; they also provide a means to recycle the mist eliminator wash water. By recirculating the relatively clean wash water, the flow rate of the wash water to the mist eliminator can be significantly increased which allows greater flexibility in washing operations, wash water treatment, and the addition of scaling inhibitors. Despite all these advantages, knock-out type precollectors are not used at most installations primarily because of plugging, high pressure drop ($\geq$3 in. H_2O), increased complexity, and operating problems.

Impingement (or inertial impaction) removes mist by collection on surfaces placed in the gas streams. Entrained mist is collected in such devices by forcing the gas to make changes in

flow direction as it passes through the slats. The liquid droplets thus collected coalesce and fall by gravity back into the scrubbing slurry. Impingement type mist eliminators used widely in lime/limestone slurry systems include baffle configurations. Baffle-type mist eliminators include the conventional open-vane (slat) and closed-vane chevron designs (Figure 2.4-7). The baffle design mist eliminators are most common and constitute the simplest method of mist elimination.

2.4.2.4 Reheaters. Reheaters raise the temperature of the scrubbed gas stream in order to prevent condensation of acidic moisture and subsequent corrosion in the downstream equipment (ducts, fans, and stack). FGD systems that do not use reheaters must be equipped with specially lined stacks and exit ductwork to prevent corrosion. Such liners require special attention, and FGD systems using them must be equipped with emergency deluge sprays in the event of a temperature excursion.

The generic reheat strategies discussed in this section include in-line, indirect hot air, and flue gas bypass (Figure 2.4-8). In-line reheat involves the use of a heat exchanger in the gas stream downstream of the mist eliminator (Figure 2.4-8a). The heat exchanger is a set of tube bundles through which the heating medium of steam or hot water is circulated. When steam is used, the inlet steam temperatures and pressures range from 350° to 720°F and 115 to 200 psig, respectively. Saturated steam is preferred because the heat transfer coefficients of condensing steam are much higher than those of superheated steam. When hot water is used, inlet temperature of the hot water typically ranges from 250° to 350°F and the temperature drop (water) over the heat exchanger is 70° to 80°F.

Indirect hot air reheat systems inject hot air into the gas stream (Figure 2.4-8b). There are two types of indirect hot air reheaters: the external heat exchanger and the boiler preheater

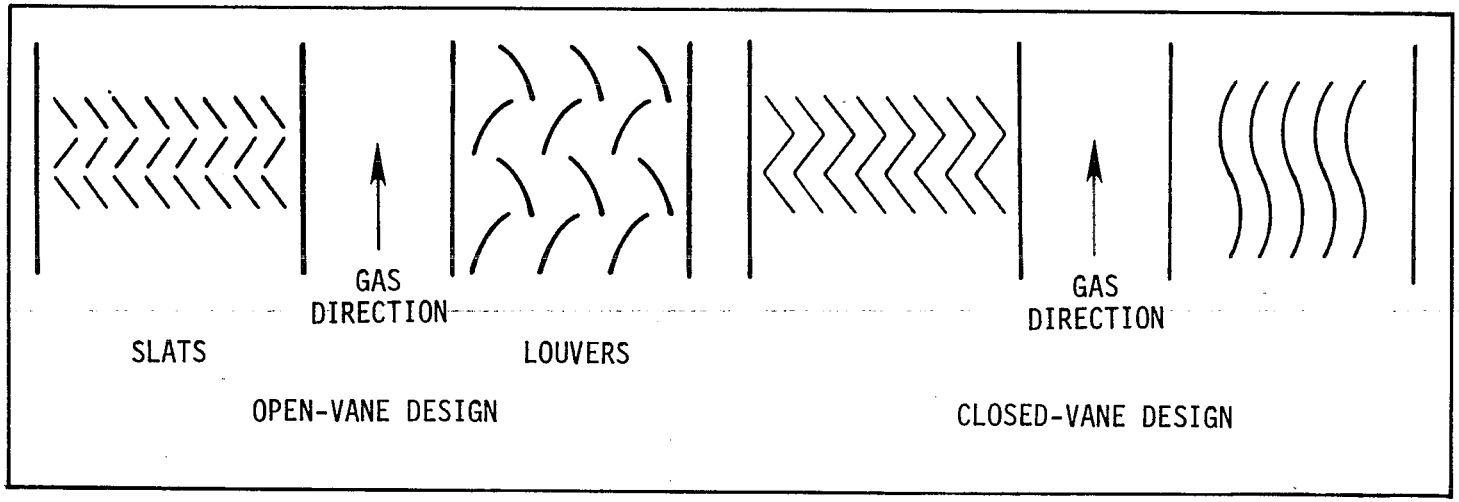

Figure 2.4-7. Baffle-type impingement mist eliminators.

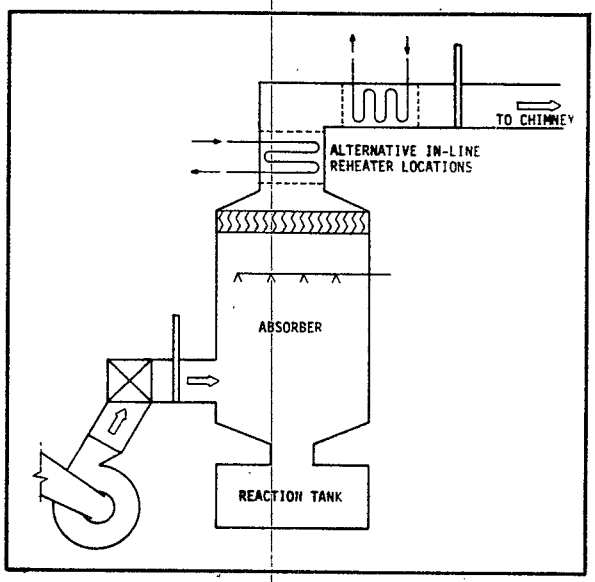

(a)

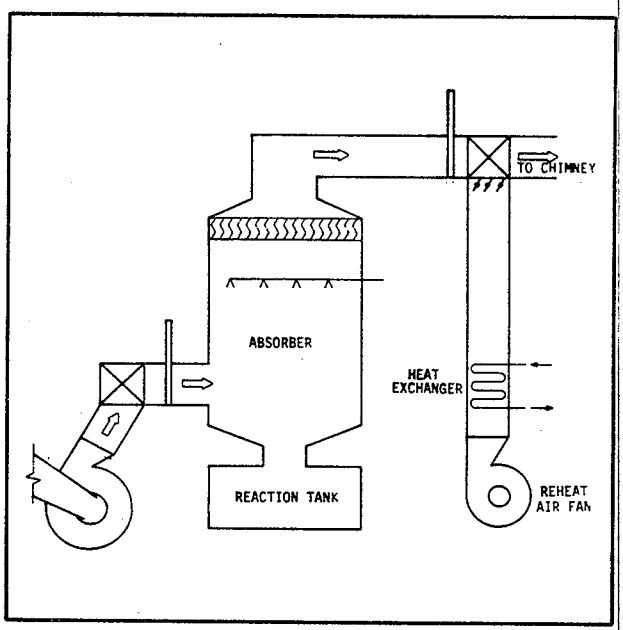

(b)

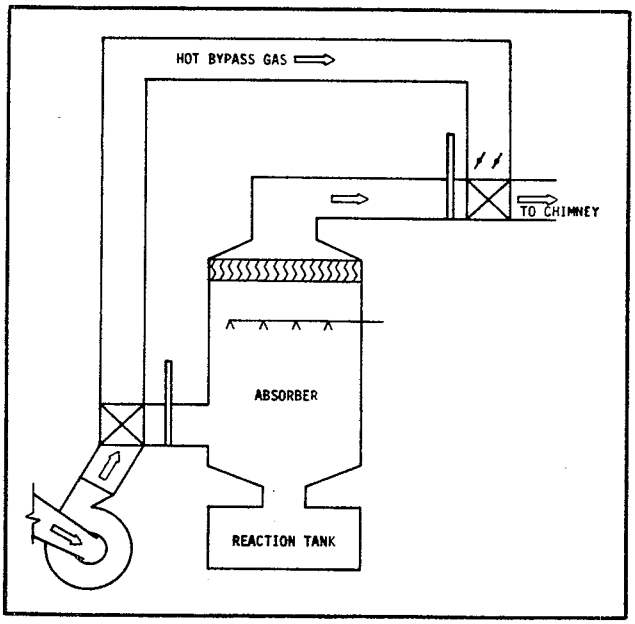

(c)

Figure 2.4-8. FGD system reheat schematic diagrams: (a) in-line; (b) indirect hot air; (c) bypass.

design. In the external heat exchanger design, reheat is achieved by heating ambient air with an external heat exchanger using steam at temperatures of 350° to 450°F. The heating tubes are usually arranged in two to three banks in the heat exchanger. Hot air and flue gas may be mixed by use of a device such as a set of nozzles or a manifold in the reheater mix chamber section. In the boiler preheater design, reheat is achieved through the use of the boiler combustion air preheater to provide hot air. In this case, part of the heat which would have been used to heat the combustion air is used to reheat the stack gas. As a consequence, the temperature of the combustion air entering the boiler is lowered, thus somewhat reducing boiler efficiency.

In the bypass reheat system (Figure 2.4-8c), a portion of the hot flue gas from the boiler bypasses the absorber(s) and is mixed with scrubbed flue gas. Two variations of this method are "hot-side" bypass, in which the flue gas is taken upstream of the boiler air preheater and "cold-side" bypass, in which flue gas is taken downstream of the boiler air preheater. In the former, a separate particulate removal device (ESP or fabric filter) specifically for the bypass gas stream is required for fly ash control when an upstream (i.e., hot-side) particulate collector is not used.

2.4.2.5 Ductwork and Dampers. Ductwork is used to channel the flow of gas within the FGD system. Ductwork in an FGD system is usually made of carbon steel plates 3/16- or 1/4-inch thick, welded in a circular or rectangular cross section. It is supported by angle frames that are stiffened at uniform intervals. The following design factors are considered for ductwork in lime/limestone slurry systems:

- Pressure and temperature
- Velocity
- Configuration (cylindrical or rectangular)
- Flow distribution

- Variations in operating conditions
- Materials of construction
- Material thicknesses
- Pressure drop

The ductwork must be designed to withstand the pressures and temperatures that occur during normal operation and also those that occur during emergency conditions. Ductwork is subject to a variety of conditions, depending on location within the system. The following list identifies the basic variants:

- Inlet ductwork
- Bypass ductwork (all or part of the flue gas)
- Outlet ductwork (with reheat and without bypass)
- Outlet ductwork (with reheat and with bypass for startup)
- Outlet ductwork (without reheat and without bypass)
- Outlet ductwork (without reheat and with bypass for startup)

Dampers are used to regulate the flow of gas through the system by control or isolation functions. The entire system or subsystems may be regulated by the use of dampers. They are mainly used at the inlet duct to the module, the outlet duct from the module, and the bypass duct. Dampers may be used individually or in combinations. A simplified overview diagram showing typical damper locations is presented in Figure 2.4-9.

A variety of damper designs are in use in lime/limestone slurry systems, including louver, guillotine, butterfly, and blanking plates. These designs are described below and depicted in Figure 2.4-10.

- Louver or multi-blade dampers may be of either opposed or parallel blade designs (Figures 2.4-10a). Louver dampers are used to regulate and isolate flue gas flow. For isolation, two dampers are used together and sealed by pressurizing the chamber formed by the ductwork between the dampers with a seal air fan. A single damper may be used for gas flow regulation.

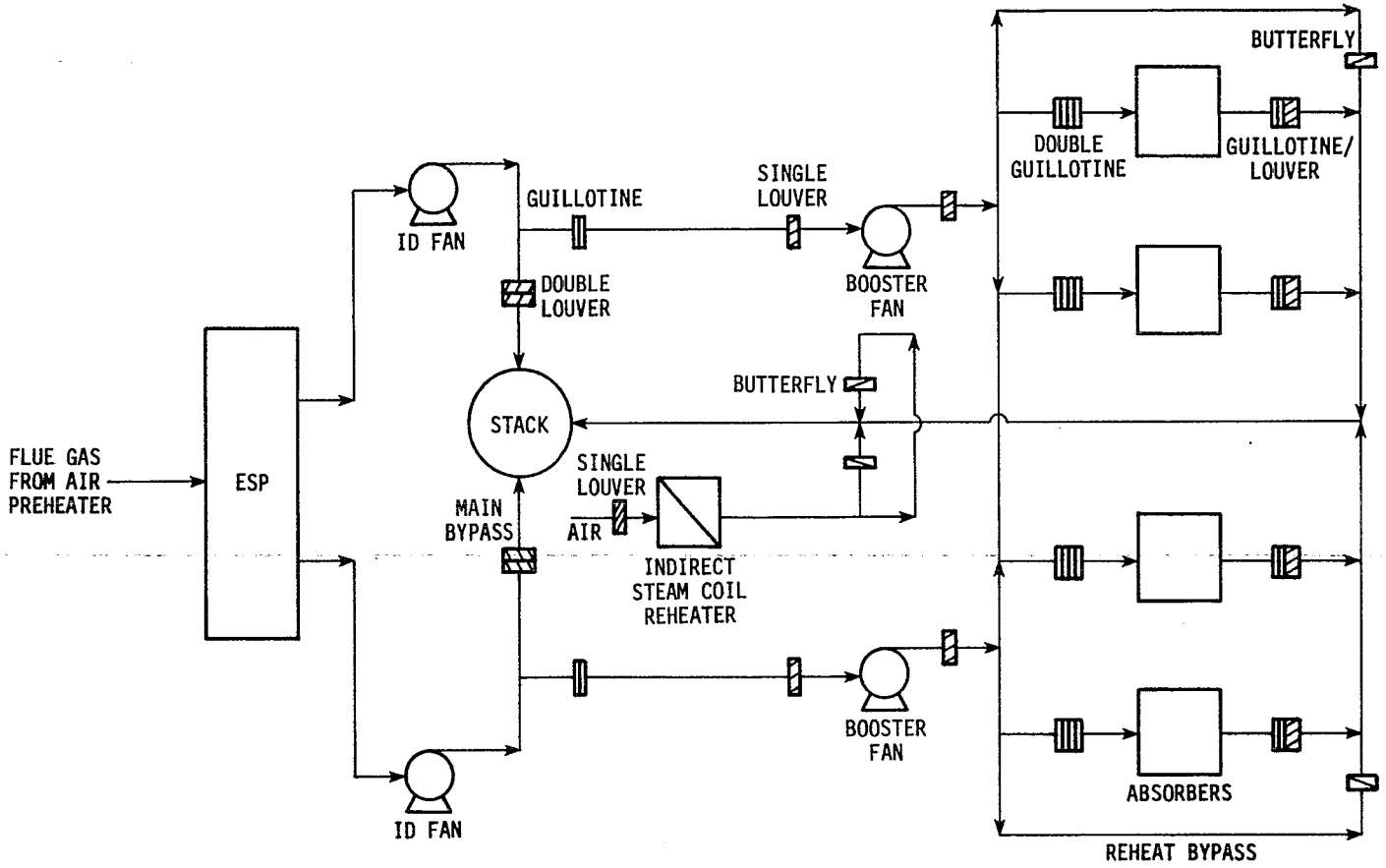

Figure 2.4-9. Simplified flow diagram showing damper configurations.

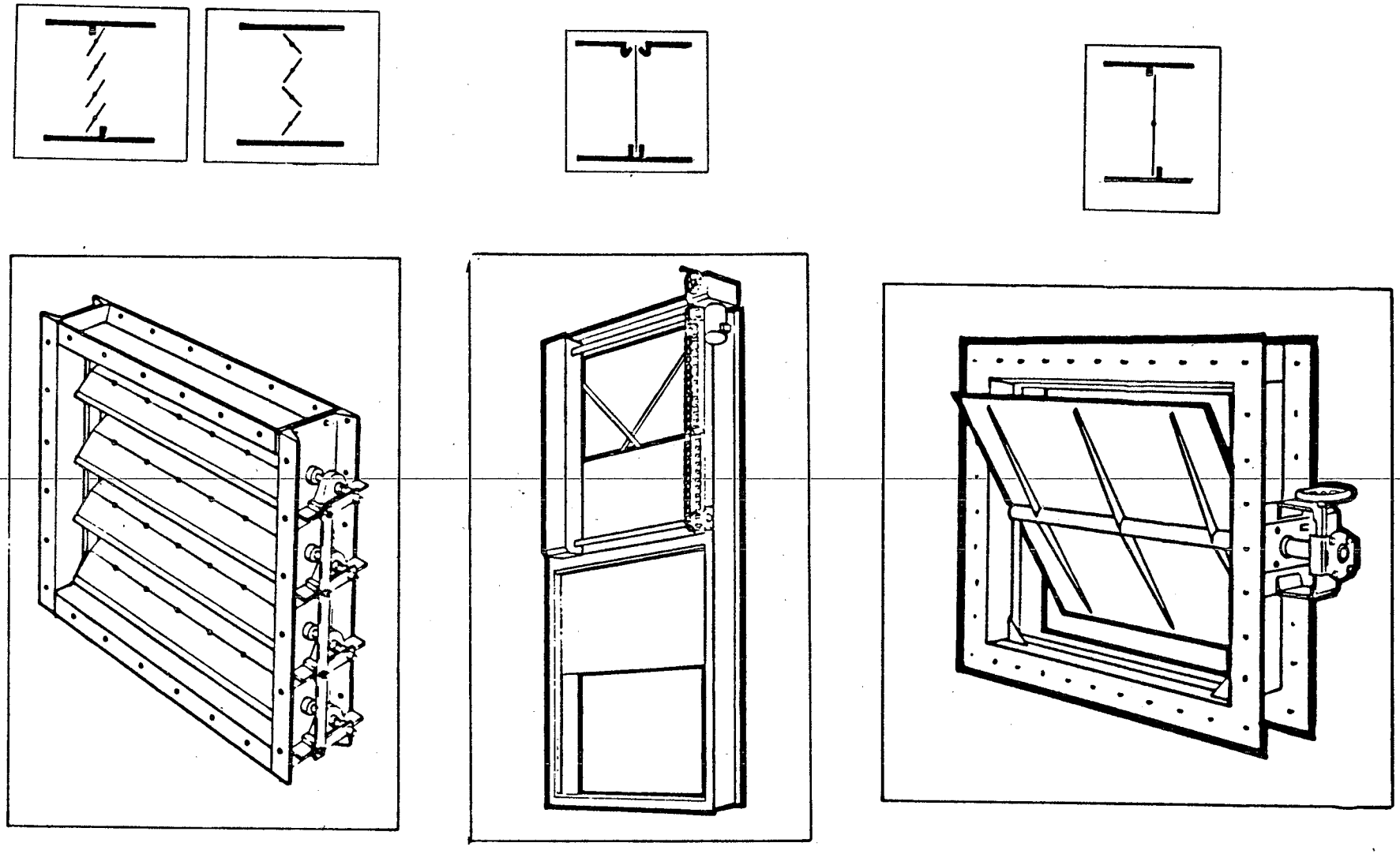

(a) Louver dampers (b) Guillotine dampers (c) Butterfly dampers

Figure 2.4-10. Different damper designs.

- A guillotine damper may be of either top-entry or bottom-entry design and with or without seal air (Figure 2.4-10b). Guillotine dampers for isolation may be equipped with seal air to pressurize the sealing space.

- Butterfly dampers are often used for secondary duct runs such as bypass or reheat air ducts (Figure 2.4-10c). Butterfly dampers are mounted by a center shaft which crosses the duct and about which the damper plate rotates from a plane parallel to the gas flow (open) to a plane perpendicular to the gas flow (closed). Butterfly dampers are more often used for gas flow regulation than gas flow isolation.

- The most basic damper is the simple blank-off plate. Blanking plates are used to isolate absorbers for entry by operation and maintenance crews. The blanking plate ensures complete isolation by "breaking" the duct and inserting the plate. Blanking plates are typically used with positive ventilation air purge which adds an additional safety factor. Blanking plates are similar to guillotine dampers in that they cut across the duct opening; however, the track for a blanking plate is designed only to guide the plate as it is put in place and bolted down.

2.4.2.6 Reagent Conveyors and Storage. Conveying equipment used to transport limestone from unloading to storage includes dozing equipment, belt conveyors, and bucket elevators. Limestone is transported to feed bins by conveyors and bucket elevators. Limestone can be stored in silos, piles, or a combination of both. Short-term storage feed bins are used with both systems to feed limestone to the additive preparation system. Storage piles require more land to store a given quantity of limestone than silos. However, silos are more expensive and can experience flow problems such as plugging and jamming. Covered piles are sometimes used for limestone storage. The covers keep precipitation off the limestone pile and prevent freezing or limestone mud from developing. The primary design criterion of a limestone storage system is capacity. The storage facilities must have sufficient capacity so that the storage system does not limit the availability of the overall FGD system. There should be enough

storage capacity to account for disruptions in the normal shipping schedule. Figure 2.4-11 shows an example of a limestone handling and storage system.

Conveying equipment used to transport lime can be of three basic types, as shown in Figure 2.4-12. Most in-plant lime conveying involves simple elevation of the lime from a storage bin into a smaller feed bin. A simple combination of mechanical devices can move lime from storage at less than the initial cost and with less power consumption than a pneumatic conveyor. Mechanical conveying requires careful arrangement of bins and equipment. Alignment in a single straight row is preferable since each change of direction usually requires another conveyor. As conveying distances or elevations increase, or if conveyance involves several changes of direction or multiple points of delivery, the economic advantage of pnuematic conveying increases rapidly. Unlike the basic components of a mechanical conveyor, those of a pneumatic system are similar regardless of distance or elevation. They differ only in length of piping and size of the compressor and motor. Lime is blown up the inclined pipe by the force of air from the compressor. The other basic conveyor type is the vacuum or negative-pressure system. It draws lime through the pipe by means of a vacuum exhauster attached to the dust collector. Another arrangement, usually called a closed-loop system, uses air circulated from the compressor to the conveyor and back. A minimum amount of fresh air is drawn in and the original charge remains dry.

Minimum bulk lime storage capacity is generally considered to be either 150 percent of a plant's normal shipment size or capacity for 7 days of operation at maximum rate. Conservative engineering practice provides twice this volume, since lime is often transported on a less-dependable schedule than are other more expensive bulk chemicals. The storage vessel most often used for lime is a steel silo with a cone bottom. Concrete storage bins have been used in large facilities and are often

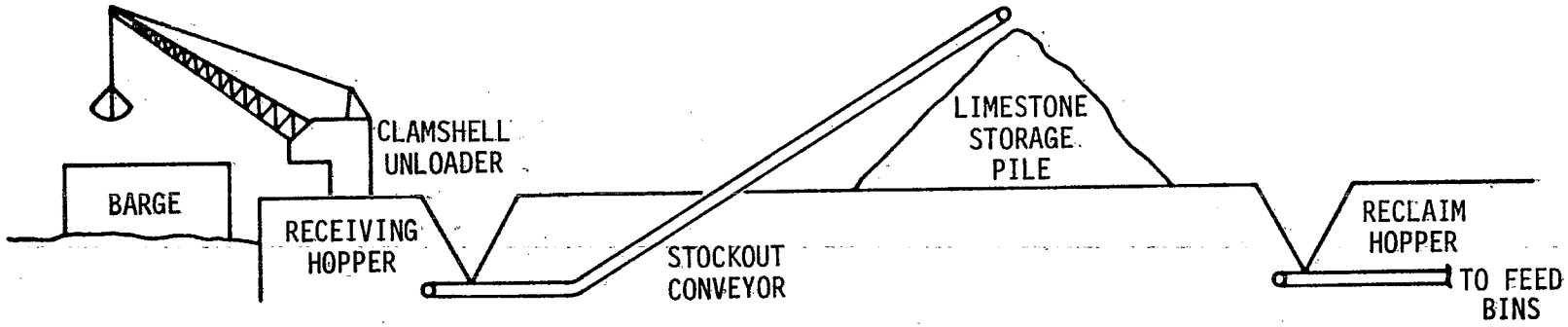

Figure 2.4-11. Barge-based limestone handling and storage system.

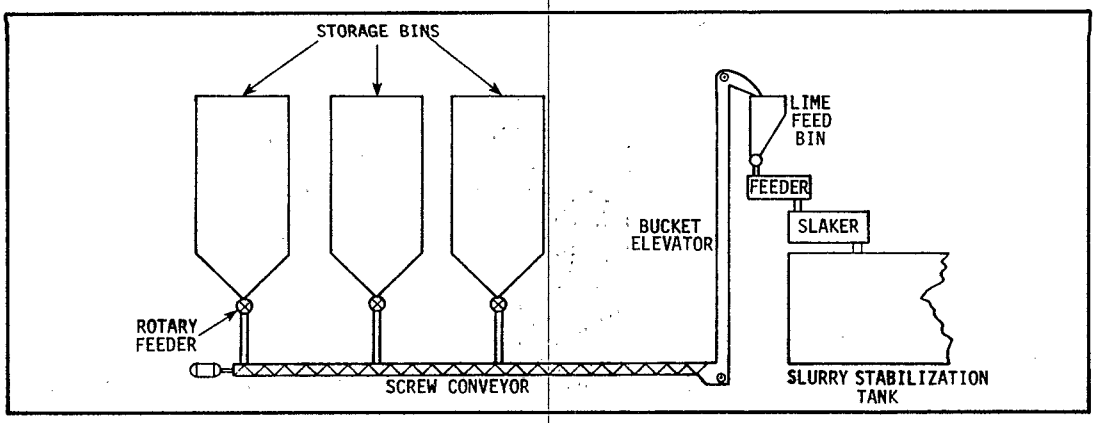

(a)

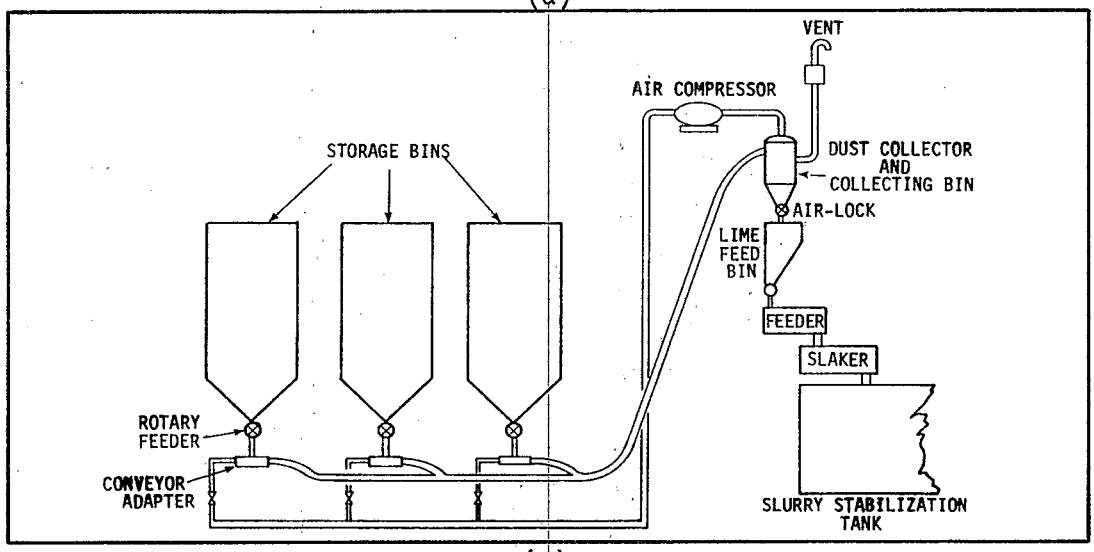

(b)

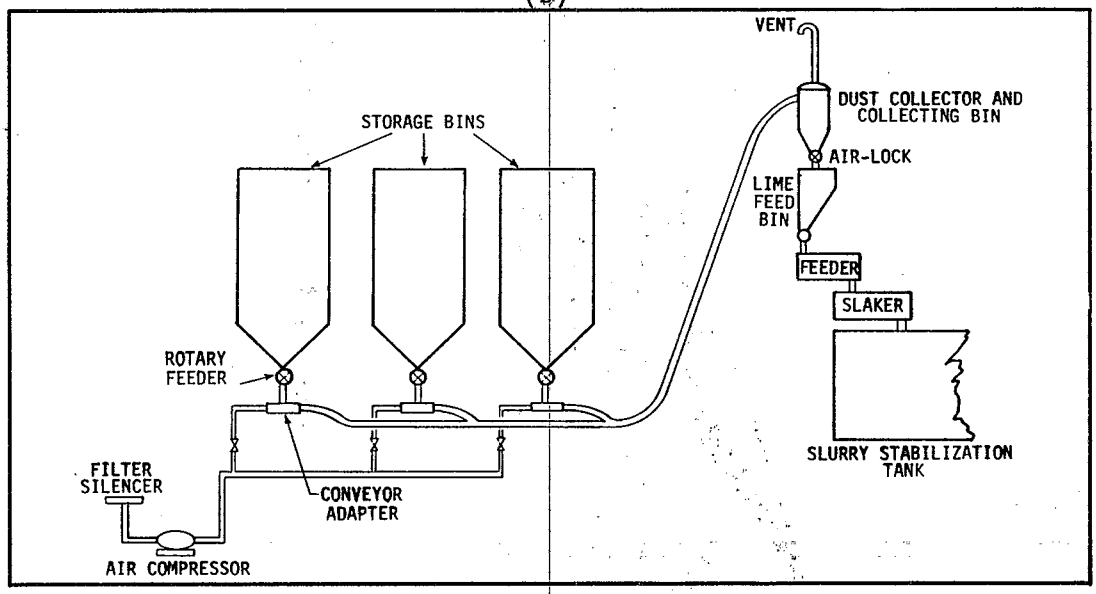

(c)

Figure 2.4-12. Three types of conveying equipment used to transport lime: (a) mechanical conveyor; (b) closed-loop conveyor; (c) positive-pressure pneumatic conveyor.

less expensive than steel bins. Lime storage bins must be weather-proofed and airtight to prevent absorption of water (moisture) and carbon dioxide from the atmosphere. Storage bins must be fitted with a cone-shaped or hopper-shaped bottom to allow an even flow of lime. Steel is most often used for the hopper section. The number of storage bins and their relative size and proportion are determined by construction economy. A diameter of 12 ft is often the most economical, with a maximum height of 40 ft. A bin of these dimensions will hold about 100 tons of lime.

A lime storage bin may be connected directly to a lime feeder that meters the flow of lime into the slaker. Frequently, however, lime is transferred from a storage bin into a smaller feed bin at a higher elevation. Lime feed bins are often designed to hold enough lime to permit either 8 or 24 hours of operation at maximum rate; thus, they can be routinely filled once per shift or once per day.

2.4.2.7 Ball Mills. Ball mills are used in limestone slurry systems to grind the limestone to a fine size in order to improve its reactivity. There is very little basic information that defines the most economical degree of grinding. However, the trend is toward finer grinding. (A finer grind provides a smaller particle which exposes more overall particle surface area and therefore improves limestone reactivity.) Specifications range from 70 percent passing through a 200-mesh screen to 95 percent passing through a 325-mesh screen; most are in the range of 60 to 80 percent passing through 325 mesh.

A ball mill consists of a rotating drum loaded with steel balls that crush the limestone by the action of the tumbling balls as the cylindrical chamber rotates. Ball mills used in FGD systems fall into two categories. The long drum or tube mill variety is a compartmented type (Figure 2.4-13a), and the Hardinge ball mill is noncompartmented and somewhat conical in shape (Figure 2.4-13b).

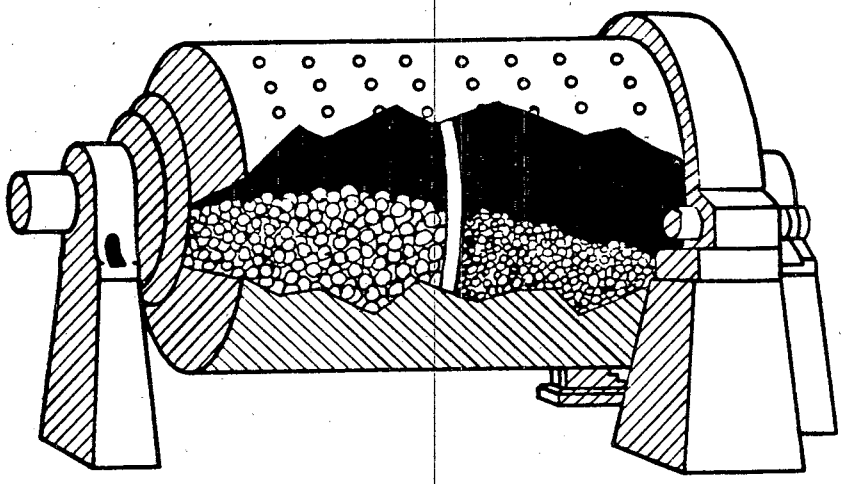

(a)

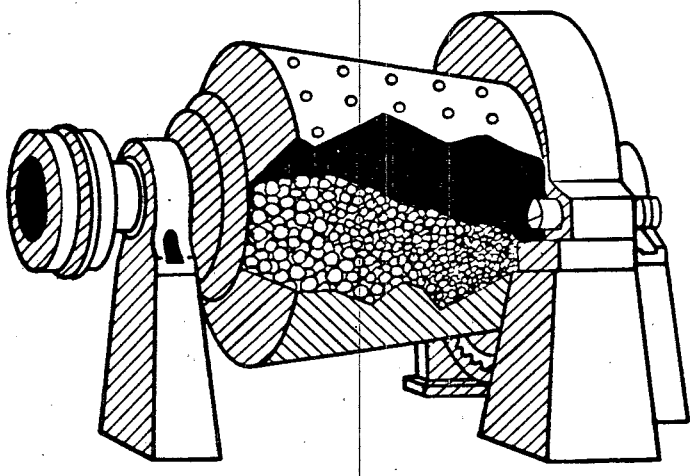

(b)

Figure 2.4-13. Two types of ball mills used in limestone slurry FGD systems: (a) compartmented ball mill; (b) Hardinge ball mill.

2.4.2.8 Slakers. A slaker is used in lime systems to convert dry calcium oxide to calcium hydroxide (see Section 2.3.1). The objective of lime slaking is to produce a smooth, creamy mixture of water and very small particles of alkali. Depending on the type of slaker used, the slurry produced contains 20 to 50 percent solids. A lime slaker combines regulated streams of lime, water under agitation, and temperature conditions needed to disperse soft hydrated particles. Dispersion must be rapid enough to prevent localized overheating and rapid crystal growth of the calcium hydroxide from occurring in the exothermic reaction. However, the mixture must be held in the slaker long enough to permit complete reaction.

Three basic types of slakers are presently used in lime slurry systems: detention, paste, and batch. A simplified diagram of each type is presented in Figure 2.4-14. A brief description of each is provided below.

- Quicklime and water are fed to the detention slaker in specific proportions in order to produce a slurry containing 20 to 30 percent solids. The mixture is agitated with a high-speed propeller mixer. From the agitated chamber, slurry flows into a quiet section where grit settles out. Degritted slurry is then diluted with additional water and flows to a stabilization tank. Grit is continuously removed from the quiet section by means of a mechanical scraper. This is rinsed with a small stream of water and discarded. In a detention slaker, water is added to each chamber. Slurry is usually retained in a detention slaker 20 to 30 min at a temperature of about 167°F.

- The paste slaker operates on the pug mill principle, kneading a thick mixture of lime and water. Feed streams are proportioned to produce a putty-like mixture containing about 40 to 50 percent solids. The mixture is blended in a narrow trough by paddles that rotate on horizontal shafts. The thick slurry continuously overflows the end of the trough into a dilution chamber where more water is added and grit is separated, rinsed, and discarded. Slurry is retained in a paste slaker for only 5 to 10 min. The slaking temperature is usually about 185 to 194°F.

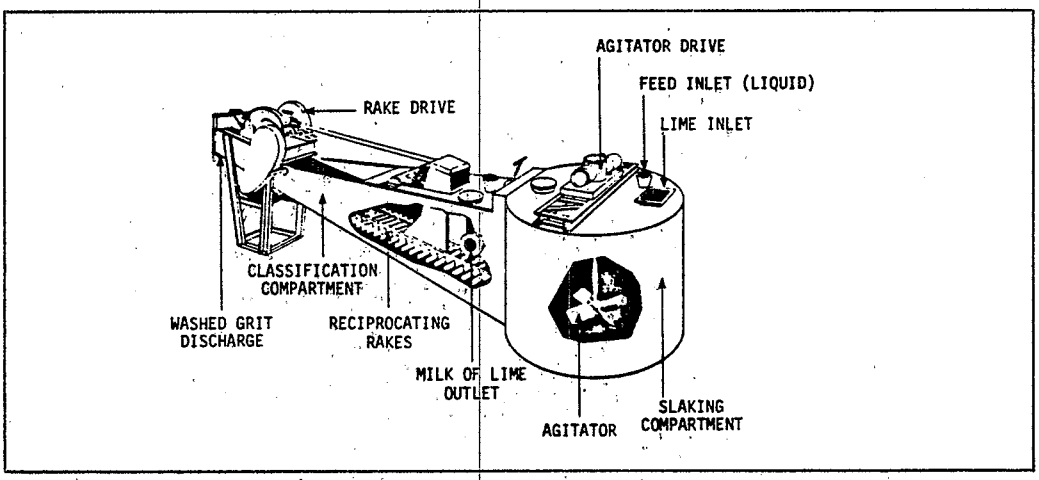

(a) Detention slaker

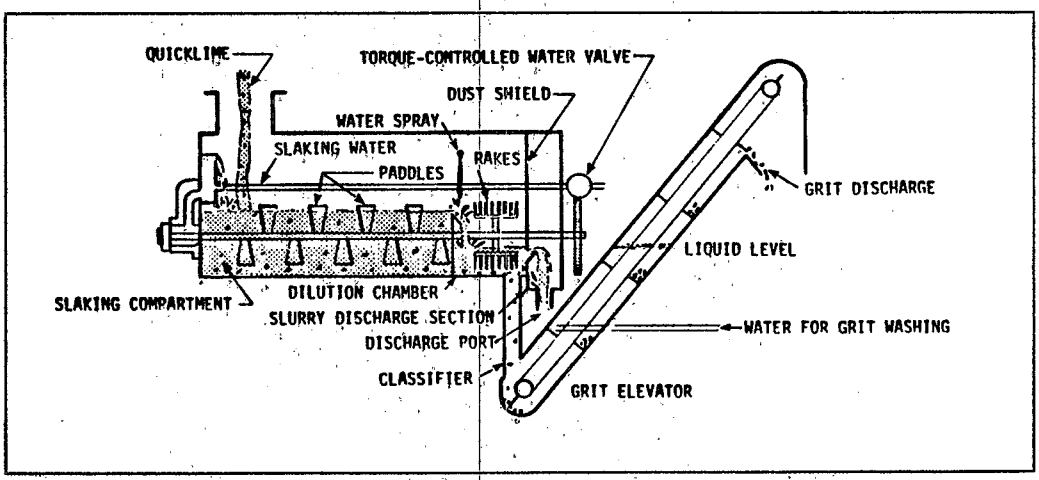

(b) Paste slaker

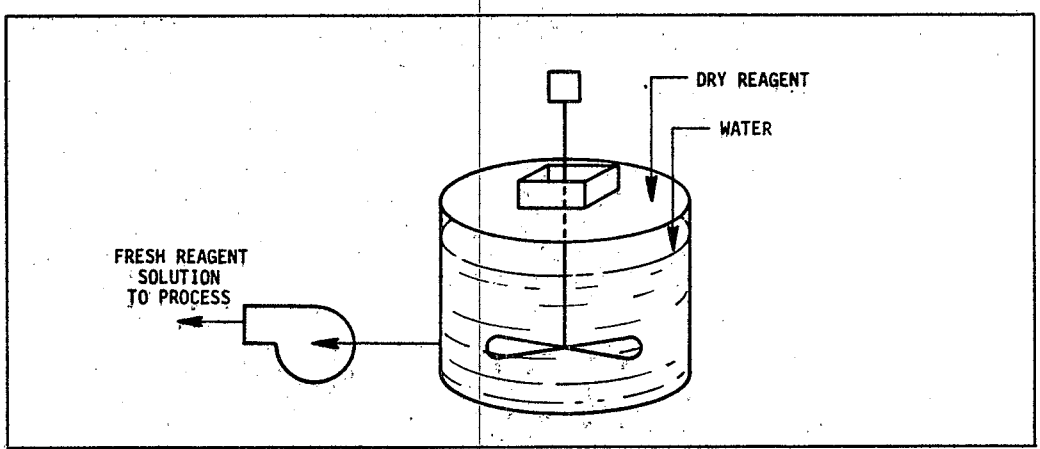

(c) Batch slaker

Figure 2.4-14. Basic types of slakers.

- Batch slakers are simple tanks equipped with agitators. Quicklime and water are fed into the tank and the mixture is stirred briskly. Although simple and relatively inexpensive, this type of device invariably produces a poor quality slurry. Even with high-energy agitation, slaking may not be uniform. Hard, crystaline lime particles are formed; slaking is usually incomplete; and part of the lime is lost as a hard scale that forms in the tank. The slurry is usually very erosive and reacts slowly in the FGD system. Batch slakers are seldom used on FGD systems today.

2.4.2.9 Tanks. Tanks are used extensively in FGD systems to support the various equipment items in the slurry circuits. Tanks allow FGD systems to operate in a fluctuating continuous mode as demanded by the power plant while various components of the FGD system itself may operate in a discontinuous "batch" mode. Tanks may be categorized as reaction, surge, collection, mix, feed, storage, or combinations of these. Table 2.4-2 shows a listing of typical subsystems that require tanks.

TABLE 2.4-2. FGD SUBSYSTEMS REQUIRING TANKS

Component/area	
Reagent Slurry Product	Waste Slurry Bleed
Presaturator/Quencher	Vacuum Filter Filtrate
Scrubber/Absorber	Centrifuge Centrate
Mist Eliminator Wash	Pond Return
Thickener Overflow	Makeup Water
Thickener Underflow	Solid Waste Additive

Tanks may or may not be covered. Covered tanks are protected from contamination and sometimes may be pressurized as part of the gas circuit. Tanks may also be covered for safety reasons or to prevent the possibility of debris falling into the tank (preventing subsequent damage to agitators, pumps, piping, or valves). Protective liners are often applied to the internal surfaces of tanks; the types of liners used depend upon the service for which the particular tank is intended and the tank construction materials.

2.4.2.10 Thickeners. The function of a thickener (also known as a clarifier) is to concentrate solids in the slurry bleed stream in order to improve waste solids handling and disposal characteristics and recover clarified water. The slurry bleed stream usually enters a thickener at a solids level of about 5 to 15 percent and exits at a concentration of 25 to 40 percent solids. A thickener is a sedimentation device that concentrates the slurry by gravity. There are two basic types of thickeners: gravity and plate. Only the gravity type will be described here because plate thickeners are rarely used on utility FGD systems.

A typical gravity thickener (Figure 2.4-15) consists of a large circular holding tank with a central vertical shaft that is supported either by internal structural design, by a center column, or by a bridge. Two long, radial rake arms extend from the lower end of the vertical shaft; two short arms may be added when necessary to rake the inner area. Plow blades are mounted on the arms at an oblique angle with a clearance of 1.5 to 3 in. from the bottom of the tank. They can be arranged identically on each arm or in an offset pattern so that the bottom is swept either once or twice during each revolution. The bottom of the tank is usually graded at a 5- to 8-degree slope from the center. The settled sludge forms a blanket on the bottom of the thickener tank and is pushed gently toward the central discharge outlet. Center scrapers clear the discharge trench and move the solid deposits toward the underflow discharge point. The rake arms and pickets move the settled solids to the central discharge point. The reclaimed overflow (i.e., clarified water) from the thickener is usually recycled and reused as makeup water.

2.4.2.11 Vacuum Filters. Vacuum filters are widely used as secondary dewatering devices because they can be operated successfully at relatively high turndown ratios over a broad range of solids concentrations. A vacuum filter also provides more operating flexibility than other types of dewatering devices

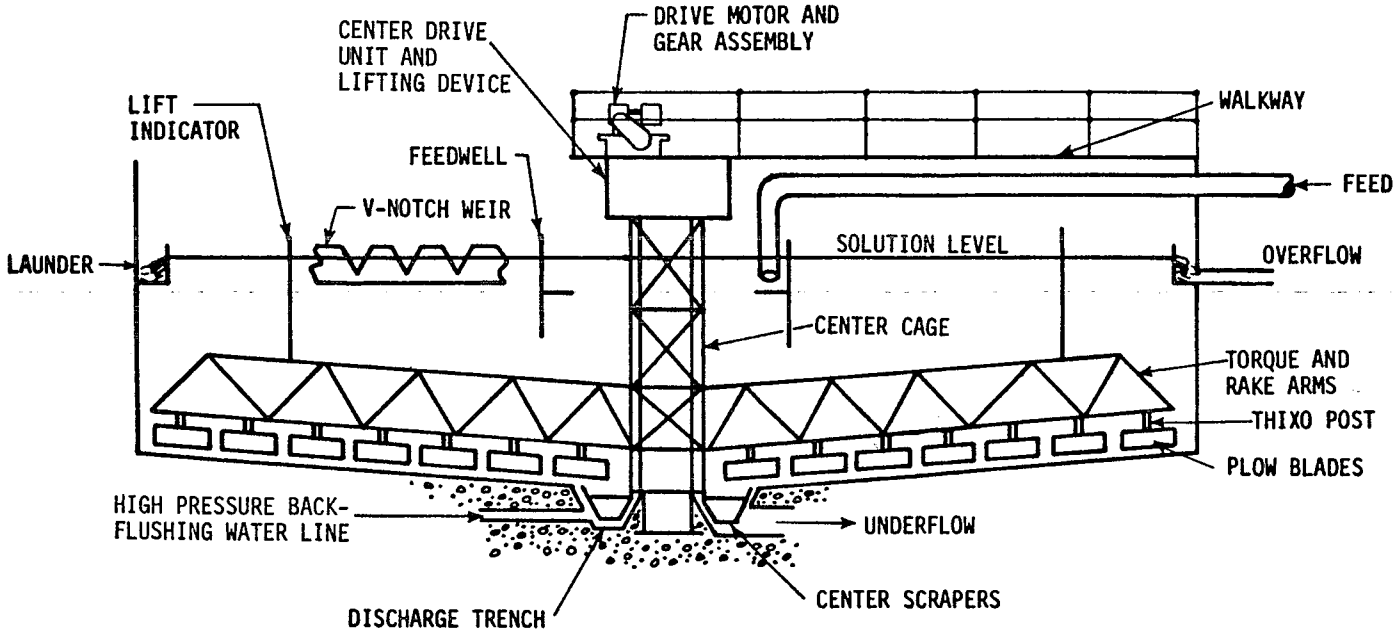

Figure 2.4-15. Diagram showing components of a thickener.

as well as producing a drier product. Because a vacuum filter will not yield an acceptable filter cake if the feed solids content is too low, it is usually preceded by a thickener. A vacuum filter produces filter cake of 45 to 75 percent solids from feed slurries containing 25 to 40 percent solids. The filtrate, typically containing 0.5 to 1.5 percent solids, is recycled to the thickener.

Two types of vacuum filters are used in conventional FGD system designs: drum and horizontal belt. Each has different characteristics and applicability. The drum type (Figure 2.4-16) is the most widely applied. In a rotary-drum vacuum filter, the slurry is fed to a tank in which the solids are held uniformly in suspension by an agitator. As the drum rotates, the faces of the sections pass successively through the slurry. The vacuum in the sections draws filtrate through the filter medium, depositing the suspended solids on the filter drum as cake. The cake undergoes dewatering by the simultaneous flow of air and filtrate in the cake drying zone. Drying is negligible when the air is at room temperature. Finally, the cake is removed in the discharge zone by a scraper.

2.4.2.12 Centrifuges. Centrifuges are used to a lesser extent than vacuum filters in solids dewatering operations. The centrifuge product is consistent and uniform and can be easily handled. Centrifuges effectively create high centrifugal forces, about 4000 times that of gravity. The equipment is relatively small and can separate bulk solids rapidly with a short residence time.

There are two types of centrifuges: those that settle and those that filter. The settling centrifuge (Figure 2.4-17), which is the only kind used in commercial lime/limestone slurry FGD systems, uses centrifugal force to increase the settling rate over that obtainable by gravity settling. The principal elements of a settling centrifuge are the rotating bowl, which is the settling vessel, and the conveyor, which discharges the settled

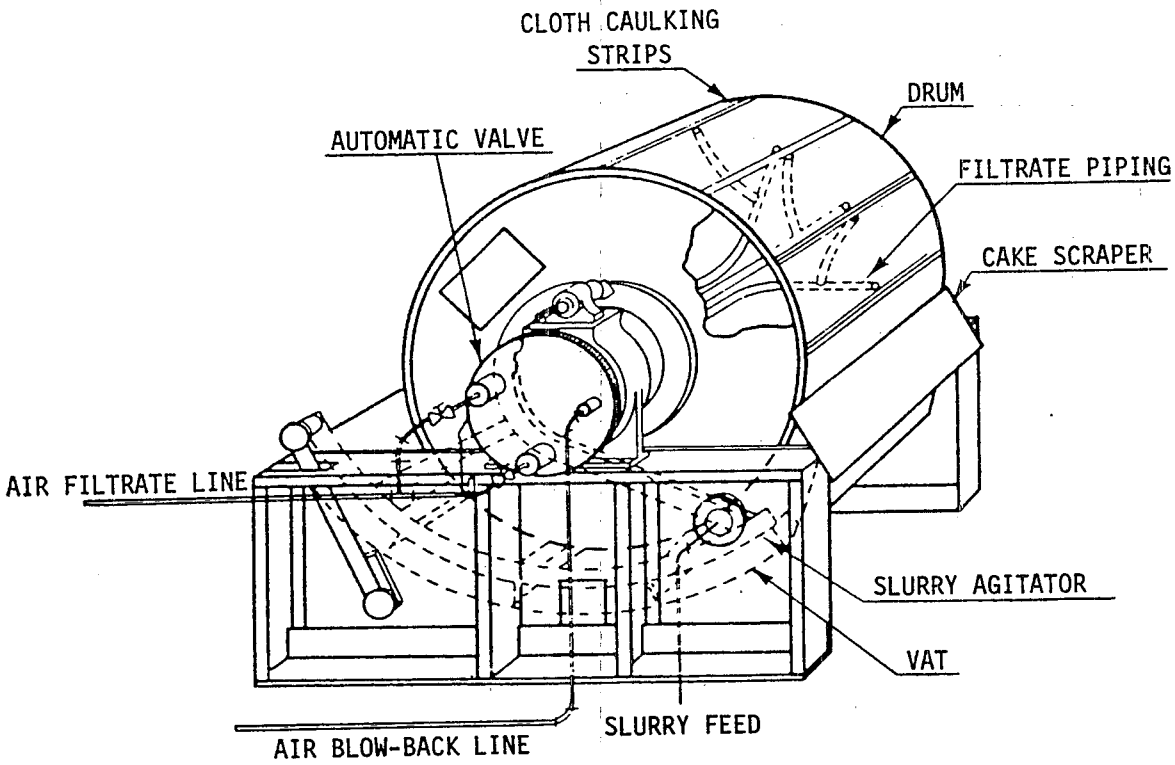

Figure 2.4-16. A rotary-drum vacuum filter.

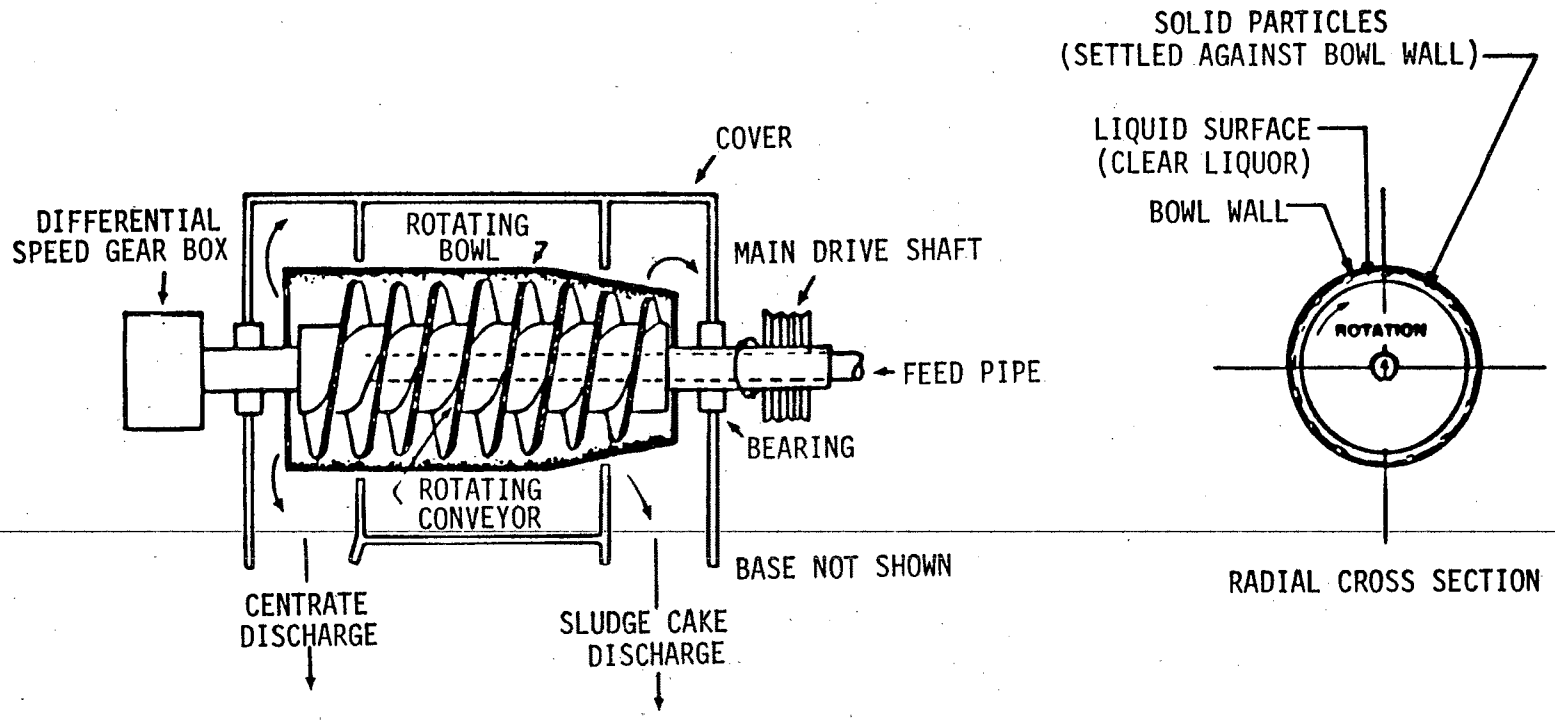

Figure 2.4-17. Components of a settling centrifuge.

solids. The solid bowl is the only centrifuge design used commercially in FGD systems. Adjustable overflow weirs at the larger end of the bowl discharge the clarified effluent, and ports on the opposite end discharge the dewatered sludge cakes. As the bowl rotates, centrifugal force causes the slurry to form an annular pool, the depth of which is determined by adjustment of the effluent weirs. Feed enters through a stationary supply pipe and passes through the conveyor hub into the bowl. As the solids settle to the outer edges of the bowl, they are picked up by the conveyor scroll and continuously overflow the effluent weirs.

2.4.2.13 Waste Processing. Waste may be processed as a treated or untreated material prior to final disposal in a pond or landfill. For untreated waste operation, the waste is physically processed only to the point that it is thickened or dewatered before disposal or "bleeding" to a pond. The term "processing", then, refers to the first phase in handling of the waste product from an FGD system.

Waste from FGD systems may be chemically treated by forced oxidation, fixation, or stabilization. These terms are defined as follows:

- Forced oxidation. Forced oxidation supplements the natural oxidation of sulfite to sulfate by forcing air through the material. The advantages of a calcium sulfate (gypsum)-bearing material include better settling and filtering properties, less disposal space required, improved structural properties of the disposed waste, potential for utilization of the gypsum (e.g., wallboard production), and minimal chemical oxygen demand of the disposed material. Forced oxidation, unlike fixation and stabilization, is not typically a tail-end operation; in many systems, this operation often occurs in the reaction tank.

- Fixation. Fixation increases the stability of the waste through chemical means. This may be accomplished by the addition of alkali, alkaline fly ash, or proprietary additives along with inert solids to produce a

chemically stable solid. Examples of commercial processes of this type are those marketed by Conversion Systems, Inc. (e.g., Poz-O-Tec) and Dravo Corporation (e.g., Calcilox).

- Stabilization. Stabilization is accomplished by the addition of non-alkaline fly ash, soil, or other dry additive. The purpose of stabilization is to enable the placement of the maximum quantity of material in a given disposal area to improve shear strength and to reduce permeability. Disadvantages are that the stabilized material is subject to erosion and rapid saturation and has residual leachability potential.

2.4.2.14 Waste Disposal. Waste disposal refers to operations at the disposal site for FGD waste following all handling and/or treatment stages. There are three basic FGD waste disposal site types: ponding, landfilling, and stacking. The most common waste disposal type is ponding. Figure 2.4-18 shows examples of four pond types. Ponds are either lined or unlined; lined ponds used for conventional FGD processes are typically clay lined. Wastes that have been fixated or stabilized are usually (although not always) landfilled. Stacking is only used for FGD systems designed to produce gypsum. Presently, only two planned limestone FGD systems are considering producing gypsum.

2.4.2.15 Pumps and Valves. Pumps are used in the solids handling and disposal area for pond water return, thickener underflow, waste slurry transfer, etc. Pumps are also used in other areas of the FGD system, such as slurry transfer, slurry bleed, and slurry recirculation. Pumps may be classified into two generic groups: displacement and nondisplacement.

Displacement pumps include reciprocating, rotary, and screw designs. Diaphragm-type reciprocating pumps are sometimes used in FGD systems for transferring thickener underflow. Rotary pumps are not designed to handle liquid which contains grit or other abrasive materials and are rarely used in lime/limestone slurry FGD systems. Screw pumps differ from rotary pumps in that

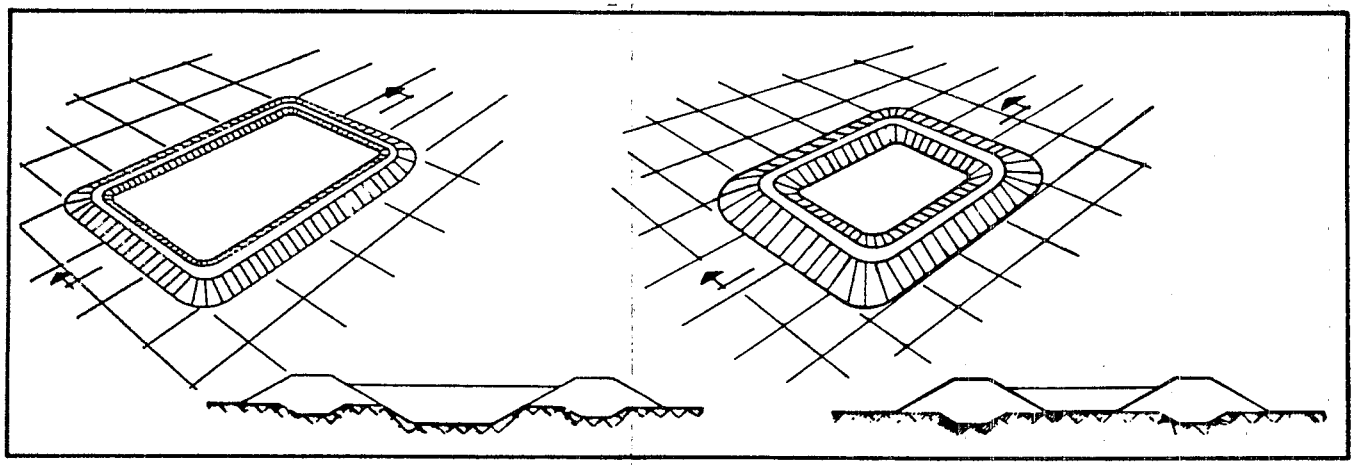

(a)

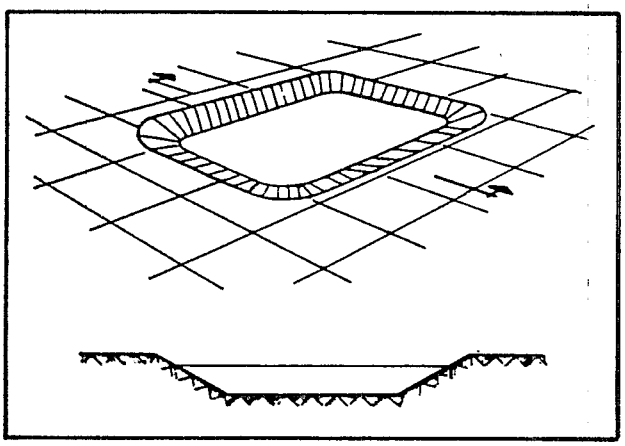

(b)

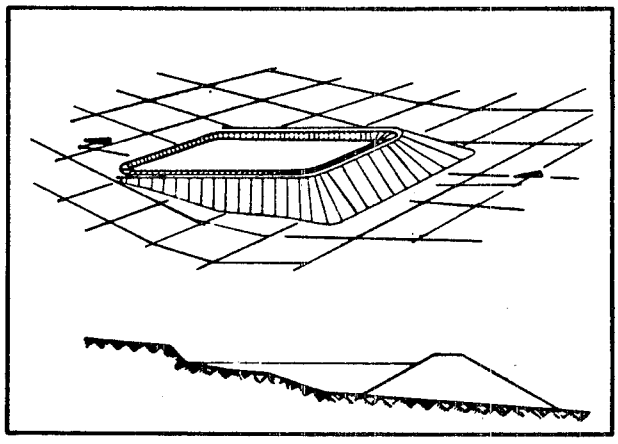

(c)

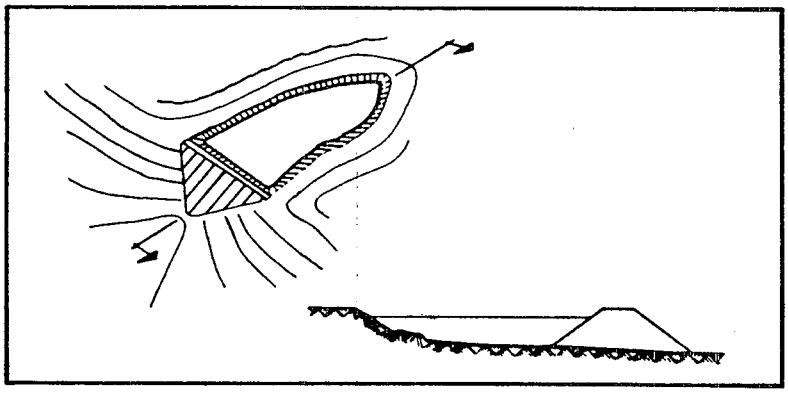

(d)

Figure 2.4-18. Examples of pond types for waste disposal: (a) diked; (b) incised; (c) side hill; (d) cross valley.

the flow through the pump is axial instead of circumferential like the rotary; they are often used in utility FGD systems for transferring reagent feed as they can easily handle a concentrated (30 to 40 percent) slurry of lime or limestone.

The only nondisplacement pump used in lime/limestone slurry FGD systems is the centrifugal pump. Centrifugal pumps are widely used for water and slurry handling. These include makeup water slurry recirculation, fresh slurry feed, thickener/clarifier overflow/underflow, and mist eliminator wash water. Of these, the recirculation pumps are the largest with capacities ranging from 5,000 to 20,000 gpm.

Valves are used throughout the FGD system not only to regulate the flow of fluids but also to isolate piping or equipment for maintenance/repair without interrupting other connected systems. This helps to provide for continuous operation and minimal downtime. The generic classifications of valves are ball, butterfly, check, gate, globe, pinch, and plug valves. Among these, the check and globe values are generally not recommended for waste and slurry service.

2.4.3 Operational Utility Lime and Limestone Slurry FGD Systems

As of the beginning of 1985, there were 91 operational lime/limestone slurry FGD systems in the United States. A listing of these systems is shown in Tables 2.4-3a and b along with an indication of the major subsystems and components described in Section 2.4.2.

2.5 FGD O&M CONSIDERATIONS

This section provides a brief introduction into the O&M practices associated with lime/limestone slurry FGD processes as they relate to system reliability, identification of failure modes, system layout and accessibility, and required operating and maintenance procedures. The purpose of this section is to introduce and define terminology that is used extensively in a

TABLE 2.4-3a. DESIGN AND OPERATING DATA FOR OPERATIONAL UTILITY LIME/LIMESTONE SLURRY FGD SYSTEMS IN THE U.S. (GENERAL DATA)

Number	Utility, Unit	Gross capacity MW	FGD capacity, MW	Process type	System supplier[a]	Initial startup (commercial startup)	Heating value Btu/lb	Coal characteristics				Bypass capabilities Yes/No	Load profile	Application (new/retrofit)	Generation	Water-loop (open/closed)	Maintenance philosophy[b]	Particulate matter control[c]
								Percent ash	Percent moisture	Percent sulfur	Percent chlorine							
1.	Alabama Electric Tombigbee 2	255	179	Limestone	PPS	9/78 (9/78)	11,000	14.7	6.6	1.6	0.04	Yes	Base	New	2	Closed	Ded	ESP
2.	Alabama Electric Tombigbee 3	255	179	Limestone	PPS	6/79 (6/79)	11,000	14.7	6.6	1.6	0.04	Yes	Base	New	2	Closed	Ded	ESP
3.	Arizona Electric Power Apache 2	195	98	Limestone	RC	8/78 (1/79)	9,900	16.0	13.0	0.5	0.01	Yes	Base	New	2	Open	Ded	ESP
4.	Arizona Electric Power Apache 3	195	98	Limestone	RC	6/79 (6/79)	9,900	16.0	13.0	0.5	0.01	Yes	Base	New	2	Open	Ded	ESP
5.	Arizona Public Service Cholla 1	119	119	Limestone	RC	10/73 (12/73)	10,200	13.5	15.0[g]	0.5	0.02	Yes	Base	Retrofit	1	Open	Pld	VS
6.	Arizona Public Service Cholla 2	285	285	Limestone	RC	4/78 (6/78)	10,200	13.5	15.0	0.5	0.02	Yes	Base	New	1	Open	Pld	VS
7.	Arizona Public Service Cholla 4	375	126	Limestone	RC	3/81 (6/81)	10,200	13.5	15.0	0.5	0.02	Yes	Base	New	2	Closed	Pld	VS
8.	Arizona Public Service Four Corners 1	195	195	Lime	GEESI	11/79 (11/79)	8,600	22.0	10.8	0.8	0.03	No	Base	Retrofit	1	Open	Ded	VS
9.	Arizona Public Service Four Corners 2	195	195	Lime	GEESI	11/79 (11/79)	8,600	22.0	10.8	0.8	0.03	No	Base	Retrofit	1	Open	Ded	VS
10.	Arizona Public Service Four Corners 3	225	225	Lime	GEESI	11/79 (11/79)	8,600	22.0	10.8	0.8	0.03	No	Base	Retrofit	1	Open	Ded	VS
11.	Associated Electric Thomas Hill 3	730	670	Limestone	M&K	10/82 (10/82)	10,500	11.2	14.0	4.0	NA	Yes	Base	New	3	Closed	NA	ESP
12.	Basin Electric Power Laramie River 1	570	570	Limestone	RC	7/80 (7/80)	8,300	6.0	28.9	0.4	0.01	Yes	Base	New	3	Closed	Oth	ESP
13.	Basin Electric Power Laramie River 2	570	570	Limestone	RC	7/81 (7/81)	8,100	7.9	28.9	0.8	0.04	Yes	Base	New	3	Closed	Oth	ESP
14.	Big Rivers Electric Green 1	242	242	Lime	AAF	12/79 (12/79)	9,800	15.4	11.4	3.8	0.05	Yes	Base	New	2	Closed	Rtd	ESP
15.	Big Rivers Electric Green 2	242	242	Lime	AAF	11/80 (12/80)	9,800	15.4	11.4	3.8	0.05	Yes	Base	New	2	Closed	Rtd	ESP
16.	Central Illinois Light Duck Creek 1	416	416	Limestone	RS	7/76 (8/78)	10,400	9.1	15.4	3.4	0.06	Yes	Base	New	2	Closed	Ded	ESP
17.	Cincinnati Gas & Electric East Bend 2	650	650	Lime	B&W	3/81 (3/81)	11,000	11.9	10.0	2.6	NA	Yes	Base	New	2	Closed	Pld	ESP
18.	Colorado Ute Electric Craig 1	455	455	Limestone	PPS	10/80 (12/80)	10,000	8.0	16.0	0.5	0.01	Yes	Base	New	2	Closed	Rtd	ESP
19.	Colorado Ute Electric Craig 2	455	455	Limestone	PPS	12/79 (5/80)	10,000	8.0	16.0	0.5	0.01	Yes	Base	New	2	Closed	Rtd	ESP
20.	Columbus & Southern Ohio Elec. Conesville 5	405	350	Lime	UOP	1/77 (2/77)	10,900	14.9	7.8	4.5	0.01	Yes	Cyclic	New	2	Closed	Oth	ESP
21.	Columbus & Southern Ohio Elec. Conesville 6	405	350	Lime	UOP	7/78 (8/78)	10,900	14.9	7.8	4.5	0.01	Yes	Cyclic	New	2	Closed	Oth	ESP
22.	Cooperative Power Asso. Coal Creek 1	550	327	Lime	CE	7/79 (8/79)	6,300	7.1	39.8	0.6	0.02	Yes	Base	New	2	Open	Rtd	ESP
23.	Cooperative Power Asso. Coal Creek 2	550	327	Lime	CE	7/80 (9/80)	6,300	7.1	39.8	0.6	0.02	Yes	Base	New	2	Open	Rtd	ESP
24.	Duquesne Light Elrama 1-4	510	510	Lime	GEESI	10/75 (10/75)	11,600	16.8	5.9	2.1	0.04	No	Base	Retrofit	1	Open	Pld	Abs
25.	Duquesne Light Phillips 1-6	408	408	Lime	GEESI	7/73 (6/74)	11,600	16.8	5.9	2.1	0.04	No	Base	Retrofit	1	Open	Pld	Abs
26.	East Kentucky Power Spurlock 2	500	500	Lime	TSH	12/82 (4/83)	11,000	16.0	8.0	3.5	NA	Yes	Base	New	3	Closed	NA	ESP
27.	Grand Haven BDR of Light & Power J.B. Sims 3	65	65	Limestone	B&W	5/83 (8/83)	11,000	11.2	9.6	2.8	NA	Yes	Base	New	2	Closed	NA	ESP

(continued)

TABLE 2.4-3a (continued)

Number	Utility, Unit	Gross capacity MW	FGD capacity, MW	Process type	System supplier[a]	Initial startup (commercial startup)	Heating value Btu/lb	Coal characteristics				Bypass capabilities Yes/No	Load profile	Application (new/retrofit)	Generation	Water-loop (open/closed)	Maintenance philosophy[b]	Particulate matter control[c]
								Percent ash	Percent moisture	Percent sulfur	Percent chlorine							
28.	Hoosier Energy Merom 1	490	441	Limestone	MHI	8/82 (8/82)	NA	NA	NA	3.5	0.20	Yes	Base	New	3	Closed	NA	ESP
29.	Hoosier Energy Merom 2	490	441	Limestone	MHI	12/81 (2/82)	NA	NA	NA	3.5	0.20	Yes	Base	New	3	Closed	NA	ESP
30.	Houston Lighting & Power W.A. Parish 8	600	492	Limestone	GEESI	10/82 (12/82)	8,900	4.8	26.7	0.4	0.01	Yes	Base	New	3	Closed	NA	ESP
31.	Indianapolis Power & Light Petersburg 3	532	532	Limestone	UOP	12/77 (12/77)	10,800	10.5	10.8	3.3	NA	Yes	Base	New	2	Closed	Ded	ESP
32.	Kansas Power & Light LaCygne 1	874	874	Limestone	B&W	12/72 (6/73)	9,400	25.0	8.6	5.4	0.03	No	Base	New	1	Open	Ded	VS
33.	Kansas Power & Light Jeffrey 1	720	540	Limestone	CE	8/78 (8/78)	8,100	5.8	30.0	0.3	0.01	Yes	Base	New	3	Closed	Pld	ESP
34.	Kansas Power & Light Jeffrey 2	720	540	Limestone	CE	1/80 (5/80)	8,100	5.8	30.0	0.3	0.01	Yes	Base	New	3	Closed	Pld	ESP
35.	Kansas Power & Light Jeffrey 3	730	540	Limestone	CE	5/83 (5/83)	8,100	5.8	30.0	0.3	0.01	Yes	Base	New	3	Closed	Pld	ESP
36.	Kansas Power & Light Lawrence 4	125	125	Limestone	CE	1/77 (1/77)	10,000	9.8	11.8	0.6	0.03	Yes	Cyclic	Retrofit	3	Closed	NA	ESP
37.	Kansas Power & Light Lawrence 5	420	420	Limestone	CE	4/78 (4/78)	10,000	9.8	11.8	0.6	0.03	Yes	Cyclic	Retrofit	3	Closed	NA	VS
38.	Kentucky Utilities Green River 1-3	65	65	Lime	AAF	9/75 (6/76)	11,300	9.9	11.0	2.5	NA	Yes	Peak	Retrofit	1	Closed	Pld	VS
39.	Lakeland Utilities McIntosh 3	364	364	Limestone	B&W	7/82 (9/82)	11,500	10.0	6.0	2.6	0.01	Yes	Base	New	2	Closed	NA	ESP
40.	Louisville Gas & Electric Cane Run 4	188	188	Lime	AAF	8/76 (8/77)	11,300	15.0	9.0	3.9	0.04	Yes	Cyclic	Retrofit	2	Closed	Pld	ESP
41.	Louisville Gas & Electric Cane Run 5	200	200	Lime	CE	12/77 (7/78)	11,300	15.0	9.0	3.9	0.04	Yes	Cyclic	Retrofit	2	Closed	Pld	ESP
42.	Louisville Gas & Electric Mill Creek 1	358	358	Lime	CE	12/80 (4/81)	11,500	14.5	9.0	3.8	0.04	Yes	Base	Retrofit	2	Closed	Pld	ESP
43.	Louisville Gas & Electric Mill Creek 2	350	350	Lime	CE	12/81 (4/82)	11,500	14.5	9.0	3.8	0.04	Yes	Base	Retrofit	2	Closed	Pld	ESP
44.	Louisville Gas & Electric Mill Creek 3	427	427	Lime	AAF	8/78 (3/79)	11,500	14.5	9.0	3.8	0.04	Yes	Base	New	2	Closed	Pld	ESP
45.	Louisville Gas & Electric Mill Creek 4	495	495	Lime	AAF	7/82 (10/82)	11,500	14.5	9.0	3.8	0.04	Yes	Base	New	2	Closed	Pld	ESP
46.	Louisville Gas & Electric Paddy's Run 6	72	72	Lime	CE	4/73 (4/73)	11,300	14.0	9.0	3.7	0.04	Yes	Peak	Retrofit	1	Closed	Ded	ESP
47.	Michigan So Central Pwr. Project 1	55	55	Limestone	B&W	5/83 (5/83)	12,200	10.0	6.0	2.3	NA	Yes	Base	New	3	Closed	NA	ESP
48.	Minnesota Power & Light Clay Boswell 4	554	475	Lime	PPS	2/80 (4/80)	8,300	9.4	24.5	0.9	0.01	No	Base	New	2	Closed	Pld	VS
49.	Minnkota Power Milton R. Young 2	440	374	Lime	TSM	9/77 (6/78)	6,500	8.9	38.0	6.0	NA	Yes	Base	New	2	Closed	Ded	ESP
50.	Monongahela Power Pleasants 1	626	626	Lime	B&W	12/78 (12/80)	12,500	NA	4.5	0.1	0.05	Yes	Base	New	2	Open	Pld	ESP
51.	Monongahela Power Pleasants 2	626	626	Lime	B&W	10/80 (12/80)	12,500	NA	4.5	0.1	0.05	Yes	Base	New	2	Open	Pld	ESP
52.	Montana Power Colstrip 1	360	360	Lime	TSM	9/75 (11/75)	8,800	8.6	23.9	0.8	0.01	No	Base	New	1	Closed	Pld	Abs
53.	Montana Power Colstrip 2	360	360	Lime	TSM	5/76 (10/76)	8,800	8.6	23.9	0.8	0.01	No	Base	New	1	Closed	Pld	Abs
54.	Montana Power Colstrip 3	778	778	Lime	BMP	10/83 (1/84)	8,800	8.6	23.9	0.8	0.01	No	Base	New	3	Closed	Pld	Abs

(continued)

TABLE 2.4-3a (continued)

Number	Utility, Unit	Gross capacity MW	FGD capacity, MW	Process type	System supplier[a]	Initial startup (commercial startup)	Heating value Btu/lb	Coal characteristics				Bypass capability-Yes/No	Load profile	Application (new/retrofit)	Generation	Water-loop (open/closed)	Maintenance philosophy[b]	Particulate matter control[c]
								Percent ash	Percent moisture	Percent sulfur	Percent chlorine							
55.	Muscatine Power & Water Muscatine 9	166	166	Limestone	RC	4/83 (8/83)	11,220	6.7	16.5	3.2	0.03	Yes	Base	New	3	Closed	NA	ESP
56.	Northern States Power Sherburne 1	750	750	Lime	CE	3/76 (5/76)	8,400	9.0	25.0	0.8	0.03	No	Base	New	1	Open	Ded	YS
57.	Northern States Power Sherburne 2	750	750	Lime	CE	3/77 (4/77)	8,400	9.0	25.0	0.8	0.03	No	Base	New	1	Open	Ded	YS
58.	Pennsylvania Power Bruce Mansfield 1	917	917	Lime	GEESI	12/75 (6/76)	12,000	12.8	7.0	3.5	NA	No	Base	New	1	Open	Ded	YS
59.	Pennsylvania Power Bruce Mansfield 2	917	917	Lime	GEESI	7/77 (10/77)	12,000	12.8	7.0	3.5	NA	No	Base	New	1	Open	Ded	YS
60.	Pennsylvania Power Bruce Mansfield 3	917	917	Lime	MWK	6/80 (10/80)	12,000	12.8	7.0	3.5	NA	No	Base	New	3	Open	Ded	ESP
61.	Plains Electric G&T Plains Escalante 1	233	233	Limestone	CE	11/83 (1/85)	NA	NA	NA	0.8	NA	NA	Base	New	3	NA	NA	NA
62.	Public Service Indiana Gibson 5	670	670	Limestone	MWK	10/82 (3/83)	NA	NA	NA	3.3	NA	Yes	Base	New	3	Closed	NA	ESP
63.	Salt River Project Coronado 1	400	320	Limestone	MWK	11/79 (12/79)	10,800	15.0	16.0	0.6	NA	Yes	Cyclic	New	2	Open	Ded	ESP
64.	Salt River Project Coronado 2	400	320	Limestone	MWK	7/80 (10/80)	10,800	15.00	16.0	0.6	NA	Yes	Cyclic	New	2	Open	Ded	ESP
65.	San Miguel Electric San Miguel 1	400	400	Limestone	B&W	8/81 (10/81)	5,000	28.0	30.0	2.4	0.06	Yes	Base	New	2	Closed	NA	ESP
66.	Seminole Electric Seminole 1	620	620	Limestone	PPS	5/83 (2/84)	11,700	10.0	10.0	2.8	0.22	Yes	Base	New	3	NA	NA	ESP
67.	Sikeston BRD Munic. Util. Sikeston 1	235	235	Limestone	B&W	6/81 (9/81)	11,300	11.2	9.5	2.8	0.08	Yes	Base	New	2	Open	NA	ESP
68.	S. Carolina Pub. Services Cross 2	450	450	Limestone	PPS	10/83 (5/84)	11,200	16.5	7.8	1.8	0.13	Yes	Base	New	2	Closed	NA	ESP
69.	S. Carolina Pub. Services Winyah 2	280	140	Limestone	B&W	7/77 (7/77)	11,500	14.0	NA	1.0	NA	Yes	Base	New	2	Open	Pld	ESP
70.	S. Carolina Pub. Services Winyah 4	280	280	Limestone	B&W	7/80 (7/80)	11,500	14.0	NA	1.0	NA	Yes	Base	New	2	Closed	Pld	ESP
71.	S. Carolina Pub. Services Winyah 4	280	280	Limestone	AAF	7/81 (9/81)	11,500	14.0	NA	1.0	NA	Yes	Base	New	2	Closed	Pld	ESP
72.	South Mississippi Electric R.D. Morrow, Sr. 1	200	124	Limestone	RS	8/78 (8/78)	12,300	10.0	6.5	1.6	0.12	Yes	Base	New	2	Closed	Pld	ESP
73.	South Mississippi Electric R.D. Morrow, Sr. 2	200	124	Limestone	RS	6/79 (6/79)	12,300	10.0	6.5	1.6	0.12	Yes	Base	New	2	Closed	Pld	ESP
74.	Southern Illinois Power Marion 4	184	184	Limestone	B&W	4/79 (6/79)	11,000	16.8	12.2	3.8	0.10	Yes	Base	New	2	Closed	NA	ESP
75.	Springfield City Utilities Southwest 1	194	194	Limestone	UOP	4/77 (9/77)	11,000	12.0	9.0	3.5	0.30	Yes	Base	New	2	Closed	Ded	ESP
76.	Springfield Water & Light Power - Dallman 3	205	205	Limestone	RC	10/80 (1/81)	11,400	10.7	11.8	3.1	0.10	Yes	Base	New	2	Closed	Pld	ESP
77.	Tennessee Valley Authority Paradise 1	704	704	Limestone	GEESI	5/83 (7/83)	12,500	17.3	10.0	3.2	0.10	Yes	Base	Retrofit	3	Closed	NA	ESP
78.	Tennessee Valley Authority Paradise 2	704	704	Limestone	GEESI	7/83 (12/83)	12,500	17.3	10.0	3.2	0.10	Yes	Base	Retrofit	3	Closed	NA	ESP
79.	Tennessee Valley Authority Widows Creek 7	575	575	Limestone	CE	3/81 (9/81)	11,800	11.7	7.7	3.3	0.07	Yes	Base	Retrofit	3	Closed	Ded	ESP
80.	Tennessee Valley Authority Widows Creek 8	550	550	Limestone	TVA	5/77 (1/78)	11,800	11.7	7.7	3.3	0.07	Yes	Base	Retrofit	1	Closed	Ded	ESP/ YS

(continued)

TABLE 2.4-3a (continued)

Number	Utility, Unit	Gross capacity MW	FDG capacity, MW	Process type	System supplier[a]	Initial startup (commercial startup)	Heating value Btu/lb	Coal characteristics				Bypass capabilities Yes/No	Load profile	Application (new/retrofit)	Generation	Water-loop (open/closed)	Maintenance philosophy[b]	Particulate matter control[c]
								Percent ash	Percent moisture	Percent sulfur	Percent chlorine							
81.	Texas Munic. Power Agency Gibbons Creek 1	443	400	Limestone	CE	11/82 (10/83)	4,900	25.0	35.0	1.1	0.01	Yes	Base	New	3	Closed	NA	ESP
82.	Texas Power & Light Sandow 4	545	382	Limestone	CE	12/80 (1/81)	NA	13.0	35.0	1.1	NA	Yes	Base	New	2	Closed	NA	ESP
83.	Texas Utilities Martin Lake 1	793	595	Limestone	RC	4/77 (10/77)	7,400	NA	33.0	9.0	NA	Yes	Base	New	2	Closed	Ded	ESP
84.	Texas Utilities Martin Lake 2	793	595	Limestone	RC	5/78 (5/78)	7,400	NA	33.0	9.0	NA	Yes	Base	New	2	Closed	Ded	ESP
85.	Texas Utilities Martin Lake 3	793	595	Limestone	RC	2/79 (2/79)	7,400	NA	33.0	9.0	NA	Yes	Base	New	2	Closed	Ded	ESP
86.	Texas Utilities Monticello 3	800	800	Limestone	RC	5/78 (10/78)	NA	18.9	31.9	0.5	0.04	Yes	Base	New	2	Closed	Ded	ESP
87.	Utah Power & Light Hunter 1	420	360	Lime	GEESI	3/79 (5/79)	11,500	12.9	7.6	0.5	NA	Yes	Base	New	2	Open	Ded	ESP
88.	Utah Power & Light Hunter 2	420	360	Lime	GEESI	6/80 (6/80)	11,500	12.9	7.6	0.5	NA	Yes	Base	New	2	Open	Ded	ESP
89.	Utah Power & Light Hunter 3	400	400	Lime	GEESI	4/83 (6/83)	11,500	12.9	7.6	0.5	NA	Yes	Base	New	3	Open	Ded	ESP
90.	Utah Power & Light Huntington 1	432	366	Lime	GEESI	5/78 (5/78)	11,700	12.0	7.7	0.4	NA	Yes	Base	New	2	Closed	Ded	ESP
91.	West Penn Power Mitchell 33	300	300	Lime	GEESI	8/82 (9/82)	12,500	12.5	5.5	2.8	NA	Yes	Base	Retrofit	3	NA	NA	ESP

[a]PPS = Peabody Process Systems, RC = Research-Cottrell, GEESI = GE Environmental Services, Inc., MWK = M. W. Kellogg, AAF = American Air Filter, RS = Environeering/Riley Stoker, B&W = Babcock & Wilcox, UOP = Air Correction Division, TSH = Thyssen/CEA, CE = Combustion Engineering, MHI = Mitsubishi Heavy Industries, BMP = Bechtel/Montana Power, TVA = Tennessee Valley Authority.

[b]Ded = Dedicated crew, Rtd = Rotated crew, Pld = pooled crew, Oth = other.

[c]VS = Venturi scrubber, ESP = Electrostatic Precipitator, Abs = In absorber vessel

Note: NA = Information not available.

TABLE 2.4-3b. DESIGN AND OPERATING DATA FOR OPERATIONAL UTILITY LIME/LIMESTONE SLURRY FGD SYSTEMS IN THE U.S. (SPECIFIC DATA)

Number[a]	Fan function unit/ booster	Fan design centrifugal/ axial	Fan application ID/FD	Fan service wet/dry	Fan location	Pre-scrubber type[b]	Absorber type	Number of absorbers	Spare absorbers Yes/No	Reheater type	Reagent prep equipment type	Absorber material[c]	Mist eliminator material[d]	Stack lining material[e]	Outlet duct material[f]	Recycle pipe material[g]	Isolation valve type	Control valve type	Sludge dewatering equipment	End product treatment
1.	Unit	Centrifugal	Forced draft	Dry	Up	QD	Spray/packed tower	2	No	Bypass	Ball mill	Rub	Noryl	ARBM	Org	RLCS	Plug	Btrfly	None	None
2.	Unit	Centrifugal	Forced draft	Dry	Up	QD	Spray tower	2	No	Bypass	Ball mill	Rub	Noryl	ARBM	Org	RLCS	Plug	Btrfly	None	None
3.	Unit	Centrifugal	Forced draft	Dry	Up	Abs	Spray/packed tower	2	Yes	Bypass	Ball mill	Org	PVC	Org	Org	RLCS	Plug	Btrfly	None	None
4.	Unit	Centrifugal	Forced draft	Dry	Up	Abs	Spray/packed tower	2	Yes	Bypass	Ball mill	Org	SS	Org	Org	RLCS	Plug	Btrfly	None	None
5.	Booster	Centrifugal	Forced draft	Dry	Up	VS	Spray/packed tower	2	No	In-line	Ball mill	Org	Metal	ARBM	Org	SS	Btrfly	Btrfly	None	None
6.	Unit	Centrifugal	Forced draft	Dry	Both	VS	Spray/packed tower	4	Yes	In-line	Ball mill	Org	Poly	Org	Org	CS/FRP	Plug	Btrfly	None	Stabilization
7.	Booster	Centrifugal	Forced draft	Dry	Up	VS	Spray/packed tower	1	No	Bypass	Ball mill	NA	NA	NA	NA	NA	NA	NA	None	Stabilization
8.	Unit	Centrifugal	Induced draft	Wet	Down	VS	Venturi tower	2	No	None	Ball mill, slaker	Org	Poly	ARBM	Metal	NA	NA	NA	None	Stabilization
9.	Unit	Centrifugal	Induced draft	Wet	Down	VS	Venturi tower	2	No	None	Ball mill, slaker	Org	Poly	ARBM	Metal	NA	NA	NA	None	Stabilization
10.	Unit	Centrifugal	Induced draft	Wet	Down	VS	Venturi tower	2	No	None	Ball mill, slaker	Org	Poly	ARBM	Metal	NA	NA	NA	None	Stabilization
11.	Unit	Axial	Forced draft	Dry	Up	Abs	Spray tower	4	Yes	Bypass	Ball mill, slaker	Ino	Poly	ARBM	NA	NA	NA	NA	Thickener, centrifuge	Forced oxidation
12.	Unit	Axial	Forced draft	Dry	Up	Abs	Spray/ packed	5	Yes	Bypass	Ball mill	Metal	Poly	ARBM	Metal	RLCS	Plug	Btrfly	Thickener, centrifuge	Forced oxidation
13.	Unit	Axial	Forced draft	Dry	Up	Abs	Spray/ packed	5	Yes	Bypass	Ball mill	Metal	Poly	ARBM	Metal	RLCS	Plug	Btrfly	Thickener, centrifuge	Forced oxidation
14.	Unit	Centrifugal	Forced draft	Dry	Up	QD	Spray tower	2	No	Indirect	Slaker	Ino	Ryton	Ino	Ino	FRP	Knife	Plug/ Pinch	Thickener, vacuum fltr	Stabilization
15.	Unit	Centrifugal	Forced draft	Dry	Up	QD	Spray tower	2	No	Indirect	Slaker	Ino	Ryton	Ino	Ino	FRP	Knife	Plug/ Pinch	Thickener, vacuum fltr	Stabilization
16.	Unit	Centrifugal	Forced draft	Dry	Up	None	Rod deck tower	4	No	None	Ball mill	Metal	Hast G	Org	Metal	FRP	Plug	Pinch	None	None
17.	Unit	Centrifugal	Forced draft	Dry	Up	Abs	Tray Tower	3	No	Indirect	Slaker	Metal	FRP	ARBM	Ino	NA	NA	NA	Thickener, vacuum fltr	Fixation
18.	Booster	Axial	Forced draft	Dry	Up	QD	Spray tower	4	Yes	Bypass; Indirect	Ball mill	Rub	Poly	ARBM	Metal/ Org	RLCS	Plug	Pinch/ Btrfly	Thickener, centrifuge	None
19.	Booster	Axial	Forced draft	Dry	Up	QD	Spray tower	4	Yes	Bypass, Indirect	Ball mill	Rub	Noryl	ARBM	Metal/ Org	RLCS	Plug	Pinch/ Btrfly	Thickener, centrifuge	None
20.	Unit	Centrifugal	Forced draft	Dry	Up	QD	Tray tower	2	No	Bypass	Slaker	Rub	FRP	ARBM	ORG/ Ino	RLCS	Plug	Diaphragm	Thickener, vacuum fltr	Fixation
21.	Unit	Centrifugal	Forced draft	Dry	Up	QD	Tray tower	2	No	Bypass	Slaker	Rub	FRP	ARBM	ORG/ Ino	RLCS	Plug	Diaphragm	None	Fixation
22.	Unit	Centrifugal	Forced draft	Dry	Up	None	Spray tower	4	Yes	Bypass	Slaker	Metal	FRP	ARBM	Metal/ Ino	FRP	Knife/ Btrfly	Pinch/ Needle	None	None
23.	Unit	Centrifugal	Forced draft	Dry	Up	None	Spray tower	4	Yes	Bypass	Slaker	Metal	FRP	ARBM	Metal/ Ino	FRP	Knife/ Btrfly	Pinch/ Needle	None	None
24.	Booster	Centrifugal	Induced draft	Wet	Down	None	Venturi tower	5	Yes	None	Slaker	Org	FRP	ARBM	Org	RLCS	Plug	Pinch	Thickener, vacuum fltr	Fixation
25.	Booster	Centrifugal	Induced draft	Wet	Down	None	Venturi tower	4	No	None	Slaker	Org	FRP	ARBM	Org	RLCS	Plug	Pinch	Thickener, vacuum fltr	Fixation
26.	Booster	Centrifugal	Forced draft	Dry	Up	NA	Spray tower	4	Yes	Indirect	Slaker	NA	Poly	FRP	NA	NA	NA	NA	Thickener,	Fixation

(continued)

TABLE 2.4-3b (continued)

Number[a]	Fan function unit/ booster	Fan design centrifugal/ axial	Fan application ID/FD	Fan service wet/dry	Fan location	Pre-scrubber type[b]	Absorber type	Number of absorbers	Spare absorbers Yes/No	Reheater type	Reagent prep equipment type	Absorber material[c]	Mist eliminator material[d]	Stack lining material[e]	Outlet duct material[f]	Recycle pipe material[g]	Isolation valve type	Control valve type	Sludge dewatering equipment	End product treatment
27.	NA	NA	Forced draft	Dry	Up	NA	Spray tower	2	Yes	In-line	Slaker	NA	Poly	ARBM	NA	NA	NA	NA	Thickener, vacuum fltr	Fixation
28.	Booster	Centrifugal	Forced draft	Dry	Up	NA	Packed tower	4	NA	Bypass, indirect	Tower mill	NA	NA	NA	NA	NA	NA	NA	Thickener, vacuum fltr	Forced oxidation
29.	Booster	Centrifugal	Forced draft	Dry	Up	NA	Packed tower	4	NA	Bypass, indirect	Tower mill	NA	NA	NA	NA	NA	NA	NA	Thickener, vacuum fltr	Forced oxidation
30.	Unit	Centrifugal	Forced draft	Dry	Up	None	Spray tower	3	Yes	Bypass	Ball mill	Org	Poly	ARBM	Ino	NA	NA	NA	Thickener, vacuum fltr	Stabilization
31.	Booster	Centrifugal	Forced draft	Dry	Up	QD	Spray/grid tower	4	No	Indirect	Ball mill	Rub	FRP	Org	Org	RLCS	Knife/ Plug	Knife/ Btrfly	Thickener, vacuum fltr	Fixation
32.	Unit	Centrifugal	Induced draft	Dry	Down	VS	Tray tower	8	No	Indirect	Ball mill	Metal	FRP	Org	Org	Synth	Knife	Btrfly	None	None
33.	Unit	Centrifugal	Forced draft	Dry	Up	None	Spray tower	6	Yes	Bypass	Ball mill	Metal	FRP	ARBM	Ino/ Org	FRP/CS	Knife	Gate	None	Forced oxidation
34.	Unit	Centrifugal	Forced draft	Dry	Up	None	Spray tower	6	Yes	Bypass	Ball mill	Metal	FRP	ARBM	Ino/ Org	FRP/CS	Knife	Gate	None	Forced oxidation
35.	Unit	Centrifugal	Forced draft	Dry	Up	None	Spray tower	4	Yes	Bypass	Ball mill	Metal	FRP	ARBM	Ino/ Org	FRP/CS	Knife	Gate	None	Forced oxidation
36.	Booster	Centrifugal	Induced draft	Dry	Down	VS	Spray tower	2	No	In-line	Ball mill	Metal	FRP	Ino	Metal	FRP	Knife	Gate	Thickener	Forced oxidation
37.	Booster	Centrifugal	Induced draft	Dry	Down	VS	Spray tower	2	No	In-line	Ball mill	Metal	FRP	Ino	Metal	FRP	Knife	Gate	None	Forced oxidation
38.	Booster	Centrifugal	Forced draft	Dry	Up	VS	Mobile bed	1	No	Indirect	Slaker	Metal	SS	Ino	Ino	RLCS/ FRP/SS	Knife	Plug	None	None
39.	Booster	Centrifugal	Forced draft	Dry	Up	Abs	Spray tower	2	NA	Indirect	Ball mill	Metal	Vnyl	ARBM	Org	NA	NA	NA	Thickener, vacuum fltr	Fixation
40.	Booster	Centrifugal	Forced draft	Dry	Up	None	Mobile bed	2	No	Direct combus.	Ball mill	Ino	SS	Ino	Ino/ Org	FRP	Knife	Btrfly	Thickener, vacuum fltr	Fixation
41.	Booster	Centrifugal	Induced draft	Dry	Down	None	Spray tower	2	No	In-line	Ball mill	Org	FRP	ARBM	Metal/ Org	FRP	Knife	NA	Thickener, vacuum fltr	Fixation
42.	Booster	Centrifugal	Induced draft	Dry	Up	None	Spray tower	2	No	In-line	Ball mill	Metal	NA	Metal	Metal	NA	NA	NA	Thickener, vacuum fltr	Fixation
43.	Booster	Centrifugal	Induced draft	Dry	Down	None	Spray tower	2	No	In-line	Ball mill	Metal	NA	NA	NA	NA	NA	NA	Thickener, vacuum fltr	Fixation
44.	Unit	Centrifugal	Forced draft	Dry	Up	Q	Mobile bed	4	No	In-line	Ball mill	Metal	SS	Metal	Ino	FRP	Knife	Knife/ Plug	Thickener, vacuum fltr	Fixation
45.	Unit	Centrifugal	Forced draft	Dry	Up	Q	Mobile bed	4	No	In-line	Ball mill	Ino	SS	Metal	Org	NA	NA	NA	Thickener, vacuum fltr	Fixation
46.	Booster	Centrifugal	Induced draft	Dry	Down	None	Marble bed	2	No	Direct combus.	None	Ino	Poly	ARBM	Metal	FRP	Knife	NA	Thickener, vacuum fltr	Fixation
47.	Unit	Centrifugal	Forced draft	Dry	Up	Abs	Spray tower	1	No	In-line	Ball mill	Metal	FRP	Ino	Metal	NA	NA	NA	Thickener, vacuum fltr	Forced oxidation
48.	Unit	Centrifugal	Induced draft	Wet	Down	VS	Spray tower	4	Yes	Bypass	Slaker	Rub	Noryl	ARBM	Org/ Metal	RLCS	Plug	Pinch/ Btrfly	None	None
49.	Booster	Axial	Forced draft	Dry	Up	None	Spray tower	2	Yes	Bypass	Slaker	Rub	Noryl	Metal	Org	RLCS/SS	Plug	Pinch	Thickener cntfg., v.f.	None
50.	Booster	Centrifugal	Forced draft	Dry	Up	Q	Tray tower	4	Yes	Bypass	Slaker	Rub	FRP	Org	Ino	RLCS	Btrfly Plug	Pinch/ Diaphragm	Thickener	NA
51.	Booster	Centrifugal	Forced draft	Dry	Up	Q	Tray tower	3	Yes	Bypass	Slaker	Rub	FRP	ARBM	Ino	RLCS	Btrfly Plug	Pinch/ Diaphragm	Thickener	NA
52.	Unit	Centrifugal	Induced draft	Dry	Down	None	Venturi/spray tower	3	No	In-line	Slaker	Org	Noryl	Org	Org	RLCS	Pinch	Pinch	None	None

(continued)

TABLE 2.4-3b (continued)

Number[a]	Fan function unit/ booster	Fan design centrifugal/ axial	Fan application ID/FD	Fan service wet/dry	Fan location	Pre-scrubber type[b]	Absorber type	Number of absorbers	Spare absorbers Yes/No	Reheater type	Reagent prep equipment type	Absorber material[c]	Mist eliminator material[d]	Stack lining material[e]	Outlet duct material[f]	Recycle pipe material[g]	Isolation valve type	Control valve type	Sludge dewatering equipment	End product treatment
53.	Unit	Centrifugal	Induced draft	Dry	Down	None	Venturi/spray tower	3	No	In-line	Slaker	Org	Noryl	Org	Org	RLCM	Pinch	Pinch	None	None
54.	Unit	Centrifugal	Induced draft	Dry	Down	None	Venturi/spray tower	8	Yes	In-line	Slaker	NA	NA	NA	NA	NA	NA	NA	NA	Forced oxidation
55.	Booster	Centrifugal	Induced draft	Wet	Down	Abs	Venturi/spray tower	2	NA	In-line	Ball mill	Metal	Poly	ARBM	NA	NA	NA	NA	Thickener, vacuum fltr	Forced oxidation
56.	Unit	Centrifugal	Induced draft	Dry	Down	VS	Spray tower	12	Yes	In-line	Ball mill	Org	FRP	Metal	Metal	FRP	NA	Plug	Thickener	Forced oxidation
57.	Unit	Centrifugal	Induced draft	Dry	Down	VS	Spray tower	12	Yes	In-line	Ball mill	Org	FRP	Metal	Metal	FRP	NA	Plug	Thickener	Forced oxidation
58.	Unit	Centrifugal	Forced draft	Wet	Scrubber/ absorber	VS	Venturi tower	6	No	None	Slaker	Org	FRP	Org	Org	RLCS	Plug	Pinch	Thickener	Fixation
59.	Unit	Centrifugal	Forced draft	Wet	Scrubber/ absorber	VS	Venturi tower	6	No	None	Slaker	Org	FRP	Org	Org	RLCS	Plug	Pinch	Thickener	Fixation
60.	Unit	Centrifugal	Forced draft	Dry	Up	Abs	Spray tower (horizontal)	4	Yes	None	Slaker	Org	Noryl	Metal	Org	RLCS	Plug/ Knife	BALL	Thickener	Fixation
61.	NA	NA	NA	NA	NA	NA	Spray tower	NA	NA	NA	Ball mill	NA	NA	NA	NA	NA	NA	NA	NA	Stabilization
62.	Booster	Centrifugal	Forced draft	Dry	Up	Abs	Spray tower (horizontal)	4	NA	Indirect Bypass	Ball mill, slaker	Ino	Poly	NA	Ino	NA	NA	NA	Thickener, vacuum fltr	Fixation
63.	Booster	Centrifugal	Forced draft	Dry	Up	Abs	Spray tower (horizontal)	2	No	Bypass	Ball mill	Org	Noryl	FRP	Org	RLCS	Pinch	Diaphragm	Thickener	None
64.	Booster	Centrifugal	Forced draft	Dry	Up	Abs	Spray tower (horizontal)	2	No	Bypass	Ball mill	Org	Noryl	FRP	Org	RLCS	Pinch	Diaphragm	Thickener	None
65.	Unit	Axial	Forced draft	Dry	Up	Q	Tray tower	4	Yes	Indirect	Ball mill	Org	NA	ARBM	NA	NA	NA	NA	Thickener, vacuum fltr	Stabilization
66.	NA	Centrifugal	Forced draft	Dry	Up	QD	Spray tower	5	Yes	NA	Ball mill	Rub	NA	ARBM	Org	NA	NA	NA	NA	Forced oxidation
67.	NA	Axial	Forced draft	Dry	Up	NA	Venturi tower	3	Yes	NA	Ball mill	Org	NA	Org	NA	NA	NA	NA	None	None
68.	NA	NA	NA	NA	NA	QD	Spray tower	NA	Yes	Indirect	Ball mill	NA	NA	Org	NA	NA	NA	NA	NA	Stabilization
69.	Booster	Centrifugal	Forced draft	Dry	Up	Q	Tray	1	No	Bypass	Ball mill	Rub	FRP	FRP	Ino Org, Metal	RLCS/ SS	Knife	Knife	None	None
70.	Booster	Centrifugal	Forced draft	Dry	Up	Q	Tray tower	2	Yes	Indirect	Ball mill	Rub	FRP	FRP	Org	RLSC/ SS	Knife	Knife	Thickener	None
71.	NA	Centrifugal	Forced draft	Dry	Up	QD	Spray tower	NA	No	Indirect	Ball mill	NA	NA	NA	NA	NA	NA	NA	Thickener	None
72.	Unit	Centrifugal	Forced draft	Dry	Up	None	Rod deck tower	1	No	Bypass	Ball mill	Org	Noryl	ARBM	Hast G	RLCS/ FRP	Plug	Plug	Thickener, vacuum fltr	Fixation
73.	Unit	Centrifugal	Forced draft	Dry	Up	None	Rod deck tower	1	No	Bypass	Ball mill	Org	Noryl	ARBM	Hast G	RLCS/ FRP	Plug	Plug	Thickener, vacuum fltr	Fixation
74.	Booster	Centrifugal	Forced draft	Dry	Up	Q	Tray tower	2	No	None	Ball mill	Org	FRP	ARBM	Org	NA	NA	NA	Thickener, centrifuge	Stabilization
75.	Unit	Centrifugal	Forced draft	Dry	Up	QD	Tray tower	2	No	None	Ball mill	Rub	FRP	ARBM/ Org	Org	RLCS	Plug	Plug	Thickener, vacuum fltr	Stabilization
76.	Booster	Centrifugal	Forced draft	Dry	Up	Abs	Packed tower	2	No	Bypass	Ball mill	Metal	Poly	ARBM/ Org	Org	RLCS	Plug	Pinch/ Btrfly	Hydrocycl. vacuum fltr	Forced oxidation
77.	Booster	Centrifugal	Induced draft	Dry	Down	VS	Venturi/spray tower	6	Yes	In-line	Ball mill	Metal	NA	ARBM	NA	NA	NA	NA	Thickener, vacuum fltr	Forced oxidation
78.	Booster	Centrifugal	Induced draft	Dry	Down	VS	Venturi/spray tower	6	Yes	In-line	Ball mill	Metal	NA	ARBM	NA	NA	NA	NA	Thickener, vacuum fltr	Forced oxidation
79.	Booster	Centrifugal	Induced draft	Dry	Down	VS	Venturi/spray tower	NA	No	Indirect	Bill mill	Rub	FRP	ARBM	NA	NA	NA	NA	None	Forced oxidation
80.	Unit	Centrifugal	Forced draft	Dry	Up	None	Grid tower	4	No	Indirect	Ball mill	Rub	SS	ARBM	Metal	RLCS	NA	Knife	None	Forced oxidation

(continued)

TABLE 2.4-3b (continued)

Number[a]	Fan function unit/ booster	Fan design centrifugal/ axial	Fan application ID/FD	Fan service wet/dry	Fan location	Pre-scrubber type[b]	Absorber type	Number of absorbers	Spare absorbers Yes/No	Reheater type	Reagent prep equipment type	Absorber material[c]	Mist eliminator material[d]	Stack lining material[e]	Outlet duct material[f]	Recycle pipe material[g]	Isolation valve type	Control valve type	Sludge dewatering equipment	End product treatment
81.	NA	Axial	Forced draft	Dry	Up	None	Spray tower	3	Yes	In-line	Ball mill	Metal	SS	ARBM	Metal	NA	NA	NA	Thickener, vacuum fltr	Fixation
82.	NA	NA	Forced draft	Dry	Up	None	Spray tower	4	Yes	Bypass	Ball mill	Metal	NA	NA	NA	NA	NA	NA	None	None
83.	Unit	Centrifugal	Forced draft	Dry	Up	Abs	Packed tower	6	No	Bypass	Ball mill	Org	Poly	ARBM	Org	SS	Plug	Ball/ Btrfly	Thickener, centrifuge	Stabilization
84.	Unit	Centrifugal	Forced draft	Dry	Up	Abs	Packed tower	6	No	Bypass	Ball mill	Org	Poly	ARBM	Org	SS	Plug	Ball/ Btrfly	Thickener, centrifuge	Stabilization
85.	Unit	Centrifugal	Forced draft	Dry	Up	Abs	Packed tower	7	No	Bypass	Ball mill	Org	Poly	ARBM	Org	SS	Plug	Ball/ Btrfly	Thickener, centrifuge	Stabilization
86.	Unit	Centrifugal	Forced draft	Dry	Up	None	Spray tower	3	No	Indirect	Ball mill	Org	Poly	ARBM	Ino	RLCS	Btrfly	Pinch	None	None
87.	Booster	Centrifugal	Forced draft	Dry	Up	None	Spray tower	4	Yes	Bypass, Indirect	Slaker	Org	Poly	ARBM	Ino/ Org	SS	Btrfly	Pinch	Thickener, vacuum fltr	Stabilization
88.	Booster	Centrifugal	Forced draft	Dry	Up	None	Spray tower	4	Yes	Bypass, Indirect	Slaker	Org	Poly	ARBM	Ino/ Org	SS	Btrfly	Pinch	Thickener, vacuum fltr	Stabilization
89.	Booster	Centrifugal	Forced draft	Dry	Up	None	Spray tower	4	Yes	Indirect	Slaker	Org	Poly	ARBM	Ino/ Org	SS	Btrfly	Pinch	Thickener, vacuum fltr	Stabilization
90.	Booster	Centrifugal	Forced draft	Dry	Up	None	Spray tower	4	Yes	Bypass, Indirect	Slaker	Org	Poly	ARBM	Ino	RLCS/ FRP	Plug Btrfly	Pinch/ Gate	Thickener, vacuum fltr	Stabilization
91.	Booster	Centrifugal	Forced draft	Dry	Up	None	Spray tower	3	NA	NA	Slaker	Org	Poly	NA	Org	NA	NA	NA	Thickener, vacuum fltr	Fixation

[a]The numbers shown here correspond to those listed for each unit in Table 2.4-3a.

[b]Abs = In absorber vessel, none = no prescrubber, QD = separate quench duct, Q = separate quencher, VS = venturi scrubber (also used for particulate matter control)

[c]Org = Organic, Ino = Inorganic, Rub = Rubber

[d]PVC = Polyvinyl chloride, SS = stainless steel, Poly = polypropylene, Hast G = Hastelloy G, Vnyl - Vinyl ester, Noryl = polyphenylene, Ryton = special polymer, FRP = fiber-reinforced plastic

[e]Org = Organic, Ino = Inorganic, ARBM = Acid-Resistant Brick and Mortar, FRP = Fiber-Reinforced Plastic.

[f]Org = Organic, Ino = Inorganic, Hast G = Hastelloy G

[g]RLCS = Rubber lined carbon steel, SS = Stainless steel, CS = Carbon steel, FRP = Fiber-Reinforced Plastic.

NOTE: NA - Information not available.

more thorough treatment of these topics in Section 4, Inspection Methods and Procedures; Section 5, Performance Evaluation and Problem Diagnosis/Correction; and Section 6, Model O&M Plan.

The preceding section (2.4) provides a description of the various types of design configurations used in lime/limestone slurry FGD systems now in commercial service. Technically, each FGD system represents a unique application which varies according to plant, process, and historical considerations.

Plant considerations are conditions which relate to the power plant and its operation. They involve the power-generating unit's coal supply, boiler design, power demand, geographical site, and applicable environmental regulations. Table 2.5-1 lists the major power plant considerations.

Process considerations relate to the FGD vendor which supplies the equipment, the architect-engineer (A-E) who designs the system, and the owner/operator utility which operates the system. Each FGD supplier provides a process design with proprietary or unique characteristics. These characteristics can vary in significance from items as minor as spray nozzle design to items as major as absorber tower design. The A-E is generally subordinate to the system supplier in exerting influence on process design; however, no two FGD systems are engineered alike. The owner/operator utility will also exert an independent influence on the process design generally in accordance with their level of previous FGD operating experience.

Historical considerations relate to system purchase and service dates. These considerations lock the process design characteristics into a particular generation of technology (first, second, or third). A particular generation of technology will define certain levels of performance and operating expectations as well as flexibility in instituting modifications to upgrade

TABLE 2.5-1. MAJOR POWER PLANT CONSIDERATIONS

Coal Properties and Supplies

- Sulfur content
- Ash content
- Fly ash composition
- Chlorine content
- Moisture content
- Heating value
- Availability of coals
- Transportation considerations
- Flexibility for firing alternative coals

Steam Generator Design

- Type of steam generator
- Size of steam generator
- Flue gas
  - weight flow rate
  - volume flow rate
  - temperature
  - dewpoint
  - fly ash loading
- Additional control equipment

Power Generation Demand

- Base load
- Intermediate load
- Cycling load
- Peak load

Site Conditions

- Land availability
- Soil permeability
- Disposal facility
- Climatic and geographic effects
- Quality and availability of reagent and makeup water

Environmental Regulations

- Air
  - 1971 NSPS
  - 1979 NSPS
  - SIP
  - PSD
- Water
  - 1977 CWA
- Solid Waste
  - RCRA

performance (see Section 2.4.1.2, Characteristics of Technology Generation).

Even under the supposition that every lime/limestone slurry FGD system is a unique application, there are also sufficient similarities among the systems to permit a comparative evaluation in terms of O&M considerations. In Section 2.4.2 (Existing Design Configurations), lime/limestone slurry FGD processes were described in terms of three major equipment areas: gas handling and treatment, reagent preparation and feed, and waste solids handling and disposal. These equipment areas can be further subdivided into subareas, and the subareas further subdivided into unique subsystems. Figure 2.5-1 shows the organization and relationship of the equipment areas in a typical FGD system. Table 2.5-2 provides a summary listing of the FGD physical subsystems by major equipment area.

The physical subsystems represent the basis by which all lime/limestone slurry systems can be evaluated on a common basis. This evaluation will be conducted in the balance of this section in terms of the pertinent O&M considerations of lime/limestone slurry FGD processes. Section 2.5.1 identifies the failure modes which plague FGD systems through an analysis of the subsystems which are directly affected in terms of their impact on system stream time and reliability. The analysis is then extended into facility considerations (Section 2.5.2, System Layout, Accessibility, and Design). And finally, the various O&M practices associated with lime/limestone slurry FGD processes are defined (Section 2.5.3, O&M Practices).

2.5.1 Failure Modes

Failure modes are defined as operating problems that may lead to downtime (outage) of a subsystem or system. Failures may lead to an outage isolated to the subsystem affected, or to a multiple subsystem outage, or to a total system outage, or to a multiple system outage. A multiple system outage is possible

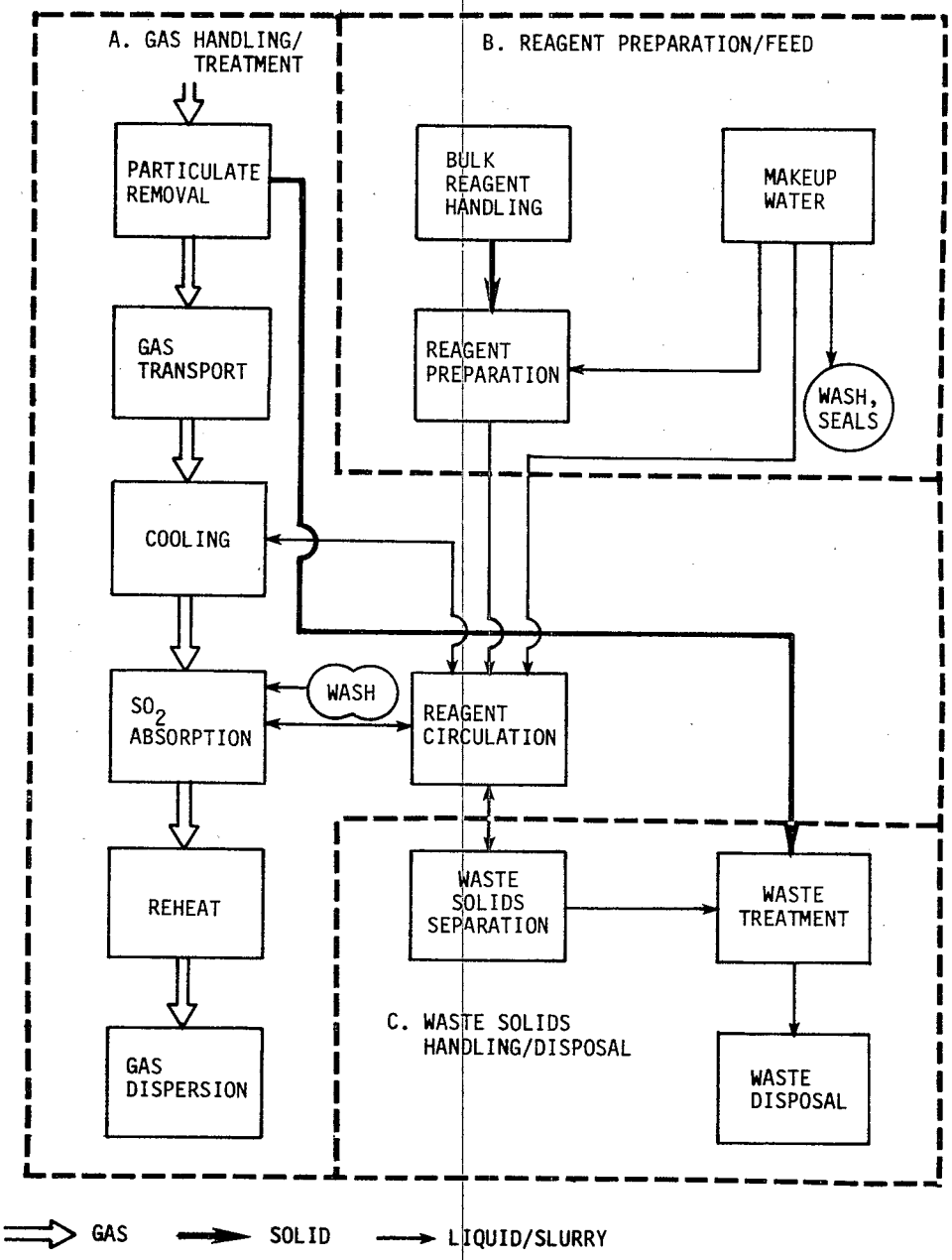

Figure 2.5-1. Major material flows in FGD systems.

TABLE 2.5-2. SUMMARY LISTING OF THE FGD SUBSYSTEMS BY MAJOR EQUIPMENT AREA

Gas handling/treatment	Reagent preparation/feed	Waste solids handling/disposal
Fans	Reagent Receiving	Thickeners
Scrubber	Ball Mills and Slakers	Vacuum Filters
Absorber	Tanks	Centrifuges
Mist Eliminator		Waste Processing
Reheater		Waste Disposal
Ductwork and Dampers		Pumps, Pipes, and Valves
Stack		

only at a plant equipped with two or more separate FGD-equipped boilers which share subsystem(s) affected by the outage. Prevalent examples are common reagent handling and preparation, solids dewatering and treatment, and ductwork and stack. A failure may have no effect on power production, may cause reduced load, or may cause a total shutdown of the generating unit(s). The effects of a failure, in addition to being a function of the relation of the system or subsystem to the rest of the plant, are also a function of the restrictions under which the plant is operating (see Section 2.1, Environmental Regulations) and the redundancy which is built into the FGD system.

Failure modes can be described in terms of the downtime or outage time that result from the failure. This can be considered a measure of unreliability. For the purposes of this manual, the results of a recently completed study in which PEI Associates, Inc. (PEI) participated in the analysis of failure modes associated with lime/limestone slurry FGD systems were used.[6] In this study, unreliability was quantified in terms of outage times as defined by "module equivalent hours" in order to combine the impacts of failures into a common basis for comparison. Module equivalent hours (MEH) is defined as the product of the number of scrubber/absorber modules affected by a given type of failure, the average duration of that type of failure in hours, and the number of times the failure occurs in a given performance period (year). The overall results of the subsystem MEH analysis are presented in Table 2.5-3. The key subsystems in order of highest MEH are (from top to bottom and left to right):

- Mist eliminators
- Ductwork
- Absorber
- Stack
- Fans
- Pipes and valves
- Thickener
- Dampers

Key failure modes were identified for key subsystems for which major contributions to unreliability occur at the system

TABLE 2.5-3. SUBSYSTEM OUTAGE TIMES IN MODULE EQUIVALENT HOURS (MEH)

Subsystem	Module downtime/ year[a]	System component of subsystem MEH, MEH/year	Plant component of subsystem MEH, MEH/year	Total Subsystem MEH/year[b]
Mist Eliminator	22,832	572	0	23,404
Ductwork	739	15,392	5,092	21,223
Absorber	13,664	3,514	0	21,178
Stack	0	12,568	4,464	17,032
Fans	8,229	4,288	1,264	13,781
Pipes and Valves	3,176	1,474	8,466	13,116
Thickener	20	4,168	7,232	11,420
Dampers	640	7,929	640	9,209
Reagent Preparation	4,032	440	4,288	8,760
Pumps	7,655	168	0	7,823
Tanks	3,096	4,496	180	7,772
Expansion Joints	676	7,024	64	7,764
Scrubber	6,764	340	0	7,104
Particulate Matter Control	3,171	1,308	1,632	6,111
Reheater	192	5,376	0	5,568
Spray Nozzles	4,198	60	0	4,258
Reagent Receiving	0	0	1,728	1,728
Water System	0	0	240	240
Instrumentation	36	0	0	36
Waste Treatment	10	0	0	10
Disposal Site	0	0	0	0

[a]One hour of module downtime is equivalent to one MEH.

[b]The total subsystem MEH/Year is the sum of the module, system and plant (station) MEH's. The three categories are mutually exclusive in that extensive MEH downtime for modular problems such as a complete mist eliminator failure due to a boiler temperature excursion forcing an entire FGD system out of service would appear under system component rather than module downtime. In this way the relative impact of problems logged for a particular subsystem can be gauged on a modular, total system, and plant (station) level as well as on an overall basis.

and plant levels. For a generating station (power plant) having three boilers equipped with FGD systems each having two modules, one hour of module downtime is one MEH. One hour of system or unit downtime is equivalent to two MEH (1 hour of system downtime x 2 modules/system). One hour of plant downtime is equivalent to six MEH (1 hour of plant downtime x 6 modules/plant). The total subsystem MEH is the sum of the MEH resulting from failures of a given subsystem. This is calculated by adding the MEH due to module, system, and plant downtimes.

Ductwork, stacks, pipes and valves, and thickeners are key subsystems with a high percentage of subsystem MEH manifested at the system and plant levels. The most troublesome failure modes for the key subsystems are highlighted below:

- Most duct failures occur in the outlet duct. The key ductwork failure mode is corrosion of the outlet duct due to moisture carryover and residual SO_x (SO_2 and SO_3).
- Stack failures are almost exclusively related to the lining. The key failure mode is acid attack of the stack lining due to moisture carryover and residual SO_x.
- Thickener failures are primarily design related. Approximately 30 percent of the design-related failures were to supporting equipment rather than the thickeners themselves. Joints, lining, and shaft failures are key failure modes for thickeners.
- Fiber reinforced plastic (FRP) pipe failures appear to cause more effective downtime (MEH) than other pipe and valve failures.

Stack lining acid attack and outlet duct corrosion were key FGD system failure modes identified in this analysis. Stack lining and outlet duct failures are low frequency failures with high penalties (effects) associated with them because they force the entire FGD system (or systems) out of service, whether or not individual modules are available, usually for extended periods. The MEH for these low frequency failures are prohibitive. The

downtime they cause may be catastrophic in terms of lost power production. There are seldom spares provided for stacks and outlet ductwork.

In order to better understand lime/limestone slurry FGD system failure modes and the factors associated with their occurrence, reported failure modes were correlated with associated system design and operating characteristics. The system design and operating characteristics investigated were as follows:

- Coal
- Boiler
- Application
- Design and operation

A brief description of this analysis is presented below. A more thorough treatment of this topic is provided in Section 5, Performance Evaluation and Problem Diagnosis/Correction.

2.5.1.1 Coal Characteristics. The coal characteristics of importance to FGD systems are sulfur and chlorine contents (see Section 2.2). These characteristics can be classified as low (less than 1 percent), medium (1 to 3 percent), and high (greater than 3 percent) for sulfur; and low and high (less/greater than 0.1 percent) for chlorine. The gas handling and treatment subsystems of absorbers, ductwork, and stack show a strong correlation between high sulfur content and unreliability, and between high chlorine content and unreliability. The predominant problem is corrosion attack in the "wet" service areas.

2.5.1.2 Boiler Characteristics. The boiler characteristics of importance to FGD systems are load profile and age. Load profile represents the production output and schedule of the generating unit (boiler). Four basic categories are defined: base load (high production level), intermediate load (moderate production level), cycling load (low production level), and peak load (intermittent production level). Boiler load profile shows a correlation between unreliability and base load units, with

downtime decreasing for cyclic load units and decreasing still further for peak load units. The overriding reason for this trend appears to be the amount of scheduled downtime available for the unit and the greater opportunity to perform FGD maintenance. The results of unreliability as a function of age, where age is divided into one year increments, are for the most part indeterminant and lack any correlation. This may result from confounding the effects of depreciation and improved human skills. If corrosion and wear were causative factors in equipment failure, the expected results would be increasing unreliability with age. If a learning process was involved in improved equipment operation, a correlation between age and reliability should exist.

2.5.1.3 Application Characteristics. The application characteristics of importance are new versus retrofit, first versus second system, and size. For new versus retrofit, fans and absorbers show a strong correlation between retrofit and unreliability. For first versus second system, a number of utilities were examined which have more than one FGD system either within their power-generating system or at the same power plant. A comparison of the first versus the second FGD system at the same plant should give an indication of the effect of operating experience on system reliability. Comparisons for the most part do indicate slightly improved reliability for the second system. For system size, overall system size (MW/unit), and the size per absorber module (MW/module), were examined. System size was broken into two groups: less or greater than 450 MW/unit. The smaller units exhibited less downtime than the larger units. The size of the unit appears to be a much more significant parameter in terms of FGD system reliability than the size of the individual modules (MW/module) in the FGD system. The results indicate that smaller units do appear more desirable in terms of reliability.

2.5.1.4 Design and Operation Considerations. Section 2.4.3 provides design data for operational FGD systems. The design and operation considerations of importance are reagent type, water loop, solids dewatering, absorber parameters, reheat, reagent preparation, and fan location. A brief summary for each consideration is provided.

- Reagent type - the gas handling and treatment subsystems of absorber, ductwork, and stack show a strong correlation between lime systems and unreliability. This is probably because lime FGD systems are predominantly used for higher sulfur coal applications. Limestone shows a high correlation with unreliability in the slurry circuit (limestone slurry is more abrasive than lime slurry).

- Water loop - the reliability of open and closed water loop FGD systems is another test for chloride (and other dissolved salts) as a failure mechanism. Expectations are that closed water loops, high in chloride, will be associated with high unreliability. Contrary to expectations, results indicated that unreliability was associated with open water loop systems. One explanation for this observation is that virtually all of the early generation commercial lime/limestone FGD systems were originally designed for closed water loop (no discharge) operation. However, due to a variety of problems (e.g., buildup of dissolved salts), the water loop was eventually opened up as one of the first measures to relieve these problems. (In other words, the water loop variable is an "effect" rather than a "cause".)

- Solids dewatering - results confirmed the expectation that FGD systems without dewatering were expected to be more reliable than systems with dewatering because they have less equipment to cause downtime and lower concentrations of dissolved salts that build up in the liquor loop.

- Absorber parameters - results indicated that towers with internals (packed, tray) have a high correlation with unreliability. The type of absorber exhibiting the highest unreliability is the packed tower. Spray tower absorbers exhibited the highest reliability. However, mist eliminators showed a high correlation of unreliability with spray tower absorbers. This is to be expected when considering the open structure of a

spray tower, the high L/G ratio, and the upward flow of the gas without impediment or a change in direction. Absorbers with internals have been associated with a high degree of unreliability and are generally excluded from new designs. Another consideration in absorbers is the use of "prescrubbers". Prescrubbers include upstream scrubbers, presaturators, and quench towers. A number of systems are equipped with one of these devices to remove particulates, effect initial SO_2 absorption and/or condition the gas stream prior to the absorber. Systems with no prescrubbers appear to be more reliable than systems with prescrubbers. This is an expected result because systems with prescrubbers have an additional subsystem that may fail. However, the presence of a prescrubber shows a high correlation with reliability for SO_2 absorbers in contrast to their effect on the total system. A possible explanation is that the combination of flue gas quenching and chloride, particulate, and initial SO_2 removal that occurs in a prescrubber serves to protect the SO_2 absorber from failures.

- Reheat - the order of decreasing reliability for type of reheat is no reheat, bypass reheat, in-line reheat, and indirect reheat.

- Reagent preparation - reagent preparation in a ball mill (limestone) is associated with considerably higher downtime for slurry circuit equipment (e.g., pipes, valves) than is reagent preparation in a slaker (lime).

- Fan location - fan unreliability was affected by fan location between the scrubber and the absorber. This location means that the fan operates completely wet--and the downtime results are as expected. There was little difference between downtime for fans located either upstream (operating on hot, particulate-cleaned gas) or downstream (operating on reheated gas) from the FGD system.

A summary of the results of the failure mode analysis by the FGD characteristics discussed in the foregoing is provided in Table 2.5-4.

2.5.2 System Layout, Accessibility, and Design

An essential feature of any treatment of O&M practices is consideration of FGD system layout, accessibility, and design. Layout and accessibility are facets of FGD design and operation

TABLE 2.5-4. SUMMARY OF FAILURE MODE ANALYSIS

System Characteristic	Results	Conclusions (cause and effect)
Reagent Type	Lime correlates with system unreliability	Lime systems are used primarily for high sulfur applications
Sulfur Content of Coal	Positive correlation with unreliability	Sulfur content affects reliability
Chlorine Content of Coal	Positive correlation with unreliability	Chlorine content affects reliability
Open Versus Closed Water Loop	Open loop correlates with unreliability	Opening water loop is an effect caused by system unreliability
Load Profile	Positive correlation between base load and unreliability	Reliability is affected by use
Age of System	No correlation	Depreciation and skills may counterbalance
Solids Dewatering	No dewatering correlates with reliability	Additional subsystems cause more unreliability

that go hand-in-hand. System layout refers to the physical arrangement of the equipment comprised by the FGD system. System accessibility refers to the approach and entry of the equipment comprised by the FGD system. System accessibility is a direct function of system layout. A physical arrangement of equipment that is more open and less restrictive will improve approach and entry to the equipment. Conversely, a physical arrangement that is close and constrictive will diminish approach and entry to the equipment. Obviously, the FGD system does not have a limitless amount of space available to permit a physical arrangement of the equipment in a completely open fashion to maximize accessibility to all equipment. Moreover, spatial necessities are assigned in priority to the power-generating unit operations and peripherals. Pollution control operations are generally assigned lowest spatial priority at the plant. Hence, within the given framework of a low spatial priority, an FGD system layout must be defined which minimizes spatial requirements while maximizing accessibility.

This section will be devoted to layout, accessibility, and design features that are supportive of adequate O&M practices. These features will be addressed in terms of the various physical subsystems previously defined in Section 2.4.2. (Existing Design Configurations).

2.5.2.1 Gas Handling and Treatment. Typically, O&M necessities are more rigorous for the "dynamic" (moving) components than for "static" (immobile) components. For this equipment area, the dynamic components are fans and dampers; the static components are scrubbers, absorbers, mist eliminators, and reheaters. With respect to the dynamic components, fans represent a greater O&M concern because of their constant high rate of motion. System layout, accessibility, and design considerations that enhance fan O&M are as follows:

- Placement of the fan at grade level, a practice which is widely accepted because of sheer size and weight of

the equipment. Some of the earlier (and smaller) systems used elevated fan placements. Accordingly, maintenance and repair activities were severely limited.

- Placement of the fan before (upstream) the absorbers, a practice which is widely accepted and implies the existence of an upstream particulate collection device (typically ESP). These fans are generally larger than those that follow (downstream) the absorber because of higher volumetric flow rate (operation at 300°F vs. 175°F). However, downstream fans require larger motors because of the additional mass added to the gas stream in the form of moisture.

- Upstream fans produce a positive pressure operating environment. Therefore, any leaks in the downstream equipment will allow emission of flue gas into the local environment. Any leakage problem is further aggravated where the FGD system is located in an enclosure. Special attention to leak-proof designs is a necessity.

- Fan capacity to overcome FGD system gas-side pressure drop can be provided by a separate booster fan or incorporated into the unit ID fan. The latter practice is widely accepted because it is easier to operate one fan instead of operating and balancing two fans. However, a separate booster fan is easier to maintain and repair because of size.

The function and duty of the various types of dampers present in lime/limestone slurry FGD systems is described in Section 2.4.2.5. Dampers are less dynamic than fans in that their operation is much slower and intermittent. However, their O&M necessities are equally demanding because of the cascading effect their malfunction can have on downstream operations. The inability to properly control and isolate the flue gas stream can either severely minimize or totally eliminate operating, maintenance, and repair functions, or compromise worker safety necessities. Layout considerations that enhance accessibility are site and design specific; however, there are some significant overall design considerations:

- The ductwork design should be able to accommodate the insertion of simple isolation blanking plates to

isolate ducts for the protection of the maintenance crew during inspection and repair. The plates and insertion point should be arranged such that the duct can be easily "broken" and the plate quickly rolled into position.

- Guillotine dampers are the most widely used design because of superior seal-off capability. However, they are more troublesome to operate, maintain, and repair than other designs. Guillotine dampers are generally top-entry design. This tends to limit observation and inspection opportunities. Emergency operation is difficult in that manual operation (in the event of an operator or drive malfunction) is timely and labor intensive. Dampers should be arranged to provide prompt access via conventional catwalk and handrails.

- Damper performance is a direct function of ductwork location. A straight-run location is preferable to an elbow or bend because of gas channelling and uneven gas distribution; the longer the straight run, the better the performance.

The O&M necessities for static components in the gas handling and treatment equipment area are typically less demanding than dynamic components because of the potentially higher wear rates associated with the latter. Accordingly, the layout, accessibility, and design considerations are correspondingly less crucial, as noted in the considerations that follow:

- Cleanout doors should be provided at various levels in the scrubber/absorber tower to:
  - access the base of the tower,
  - access the upper level of the tower, generally in the spray zone,
  - access the mist eliminator, generally below or inbetween stages, depending on whether it is a single- or multiple-stage mist eliminator design, and
  - access the reheat chamber.

- Visual ports at various levels in the tower should be provided to permit visual inspection during operation, especially for the absorber (or scrubber) at the inlet

gas/slurry, hot/dry interface area; gas/slurry contact zone; and mist eliminator.

- Manways should be provided at other levels in the tower which do not require rapid access and entry.

- A drainage system should be provided that allows for complete drainage of the towers for inspection and maintenance.

- Vertical tower versus horizontal tower arrangement is a major consideration. The vertical arrangement predominates because of spatial and cost factors. The horizontal arrangement permits overall easier access because of equal accessibility at the same elevation to all portions of the vessel. It also consumes less power because of lower gas-side pressure drop and lower slurry pumping height.

- Horizontal (vertical gas flow) versus vertical (horizontal gas flow) mist eliminator and reheater (in-line tube bundles) designs involve the same O&M advantages and disadvantages as vertical and horizontal towers.

2.5.2.2 Reagent Preparation and Feed. Similar to gas handling and treatment, reagent preparation and feed equipment can be distinguished according to dynamic and static service. Dynamic components include conveyors, ball mills, slakers, and pumps; static components include tanks, piping and valves, and storage bins. Again, the dynamic components are of more concern than the static components. The dynamic components operate in a slurry service environment. Slurry suspensions of 5 to 75 percent solids are continuously or intermittently transferred or recycled at low to high flow rates in the slurry circuit. Access and design considerations that enhance O&M are as follows:

- Placement of the slurry pumps in a central pump house at grade level. Segregation of pumps with similar or identical service requirements or location of pumps in a sump area (below grade or beneath the equipment in slurry service) limits operating versatility, maintenance, and repair.

- Provision to accommodate flush-out and flush water necessities during shutdown and outages through fresh

(or clarified) water supply and disposal sumps and drains.

The static components are subjected to the same slurry service environment as the dynamic components. Although their duty requirements are less severe in that they are not required to move within this environment, the same restrictions apply as those described for the dynamic components. Additional design considerations include:

- Provision of sufficient space to minimize elbows, bends, restrictions, reducers, and expansions in the slurry piping.
- Provision of ample drainage to quickly accommodate planned and unscheduled outages.
- Provision of sufficient surge capacity within the tankage network to accommodate extended peak load operation or to withstand the loss of a tank for a limited period of time.

2.5.2.3 Waste Solids Handling and Disposal. Continuing with the distinction of dynamic and static components, dynamic components include thickeners (clarifiers), filters, centrifuges, conveyors, and pumps. Static components include tanks and storage bins. Many of the same considerations described for reagent preparation and feed also apply here. Additional considerations peculiar to this area include:

- Placement of all secondary solids dewatering equipment (filters and centrifuges and ancillaries) in a central dewatering house at the grade level.
- Minimization of the pipe run between primary dewatering (thickener) and the dewatering house, as well as the dewatering house and disposal area.
- Sufficient space to stockpile solid waste during emergency conditions (thickener outage, filter outage, pump failure, pipe failure).
- Access walkways to inspect thickeners and filter operation.

- Protective covers for tanks, thickeners, and other open vessels.

2.5.3 O&M Practices

This section introduces the various types of operation and maintenance (O&M) practices for lime/limestone slurry FGD processes, the conditions under which the practices are implemented, and specific activities involved in each. A more thorough treatment of the subject can be found in Section 6 (Model O&M Plan). This section introduces the O&M requirements for these processes: standard operating practices, routine startup and shutdown, and operating modes for system upset conditions. The size, duties, and training needs of an operating crew are reviewed. Maintenance practices are described separately; the requirements for maintenance personnel, in terms of numbers, duties, experience level, and training are also reviewed.

2.5.3.1 Standard Operations. With increasingly more stringent requirements on plant emissions, the owner/operator utility must make a strong commitment to FGD operation, including adequate staffing. Operators should be assigned specifically and solely to the FGD system during each shift. FGD system operation must be coordinated with the unit's power generation schedule and even into the purchasing of coal (i.e., sulfur, ash, and chlorine characteristics). Some of the current difficulties with lime/limestone FGD systems relate to poor operating practices, unnecessarily complex operating procedures, or both. In some cases, although the equipment has been correctly installed, it rapidly deteriorates and breaks down because of improper O&M practices. The operating characteristics of the FGD system can be established during the initial startup period, which is also a time for finalizing operating procedures and staff training. Once steady-state operating conditions are reached, the system must be closely monitored and controlled to ensure proper performance.

During periods of changing load or variation of any system parameter, additional monitoring is required. Some standard O&M procedures are described below.

- Varying Inlet SO_2 and Boiler Load. As boiler load is increased, additional modules are placed in service and, conversely, modules are removed from service when boiler load is reduced. With each change in load, the operator must check the system to verify that all in-service modules are operating in a balanced condition. As the SO_2 concentration in the inlet flue gas changes, the FGD system should be able to accommodate and compensate for such changes. Operator surveillance of system performance is needed, however, to verify proper system response (e.g., slurry recirculation pumps can be added and removed from service as the SO_2 concentration increases or decreases).

- Verification of Flow Rates. The easiest method of verifying liquid flow rates is for an operator to determine the discharge pressure in the slurry recirculation spray header with a hand-held pressure gauge (permanently mounted pressure gauges frequently plug in slurry service). Flow in slurry piping can be checked by touching the pipe. If the piping is cold to the touch at the normal operating temperature of 125° to 130°F, the line may be plugged.

- Routine Surveillance of Operation. Visual inspection of the absorbers and reaction tanks can identify scaling, corrosion, or erosion before they seriously impact the operation of the system. Visual observation can identify leaks, accumulation of liquid or scale around process piping, or discoloration on the ductwork surface resulting from inadequate or deteriorated lining material.

- Mist Eliminators. Many techniques have been employed to improve mist collection and minimize operational problems. The mist eliminator can be washed with a spray of process makeup water or a mixture of makeup water and thickener overflow water. Successful, long-term operation without mist eliminator plugging generally requires continuous operator surveillance, both to check the differential pressure across the mist eliminator section and to visually inspect the appearance of blade surface during shut down periods.

- Reheaters. In-line reheaters are frequently subject to corrosion by chlorides and sulfates. Plugging and deposition can also occur, but are more rare. Usually, proper use of soot blowers prevents these problems.

- Reagent Preparation. Operational procedures associated with handling and storage of reagent are similar to those of coal handling. Operation of pumps, valves, and piping in the slurry preparation equipment is similar to that in other slurry service.

- Pumps, Pipes, and Valves. Operating experience has shown that pumps, pipes, and valves can be significant sources of trouble in the abrasive and corrosive environments of a lime/limestone FGD system. The flow streams of greatest concern are the reagent feed slurry, the slurry recirculation loop, and the slurry bleed streams. When equipment is temporarily removed from slurry service, it must be thoroughly flushed.

- Thickeners. Considerable operator surveillance is required to minimize the suspended solids in the thickener overflow so that this liquid can be recycled to the system as supplementary pump seal water, mist eliminator wash water, or slurry preparation water. For optimum performance, the operator must maintain surveillance of such parameters as underflow slurry density, flocculant feed rate, inlet slurry characteristics, and turbidity of the overflow.

- Waste Disposal. For untreated waste slurry disposal, operation of both the discharge to the pond and the return water equipment requires attention of the operating staff. In addition to normal operations, the pond site must be monitored periodically for proper water level, embankment damage, and security for protection of the public. Landfill disposal involves the operation of secondary dewatering equipment. Again, when any of the process equipment is temporarily removed from service, it must be flushed and cleaned to prevent deposition of waste solids. For waste treatment (stabilization or fixation), personnel are required to operate the equipment and to maintain proper process chemistry.

- Process Instrumentation and Controls. Operation of the FGD system requires more of the operating staff than surveillance of automated control loops and attention to indicator readouts on a control panel. Manual control and operator response to manual data indication

are often more reliable than automatic control systems and are often needed to prevent failure of the control system. Many problems can be prevented when an operator can effectively integrate manual with automated control techniques.

2.5.3.2 Initial Operations. Very seldom does a system perform properly when it is first placed in service. Even though stringent quality control may be exercised during the construction phase, it is usually necessary to optimize the control functions and to correct minor problems. Although the individual components may be completely checked out during construction tests, the integrated system performance can be evaluated only when the system is placed in operation. Compliance testing is normally accomplished immediately after initial startup. Tests conducted under the proposed normal operating procedures can verify the procedures and familiarize the station staff with the system. After the initial startup tests have established a norm for system operation, additional testing is conducted for two purposes: to verify performance guarantees and to demonstrate continuing compliance with regulations.

2.5.3.3 Startup, Shutdown, Standby, and Outage. Startup and shutdown are two nonsteady-state operating modes that occur frequently. Furthermore, two nonoperating conditions that necessitate action by the operating staff are system standby and extended outage. Each of these situations is of special interest to the FGD operating staff.

- Startup and Shutdown. Before flue gas is introduced into the system, slurry is added as a "lean" stream (low slurry solids content). A prerequisite to starting slurry flow is the initiation of the limestone grinding or lime slaking to ensure the availability of slurry feed. After integrated operation begins and reaction product solids are permitted to build up to a specified control level, the staff must be ready to process the slurry bleed stream (i.e., slurry purged for waste disposal). When the system is placed in service, the operating staff must be available to monitor system response as boiler load is increased. As

the flue gas flow rate through the modules approaches the maximum design value, additional modules are systematically brought into service. As boiler load is reduced in preparation for unit shutdown, the startup sequence is executed in reverse.

- System Standby. A module that is ready to process flue gas is said to be on standby. The module may have been removed from service because of a reduction in station load and is now prepared for service because of an anticipated increase in load. When a module is removed from service because of a load reduction, the slurry bleed stream must be terminated and the bleed line flushed. When a module is brought into service, the operator must prepare the bleed stream line to accept flow.

- Extended Outage. Additional attention is necessary when a module is removed from service for an extended period. The slurry recycle pumps and the recycle line should be drained and flushed. During the outage, the operating staff should conduct inspections of equipment that is normally inaccessible.

2.5.3.4 System Upsets. Upsets are associated with the boiler, particulate control system, the FGD system, or the waste disposal system. A boiler "trip" (actuated shut-off of equipment item) will terminate the flow of flue gas through the FGD system. Except for the possible discharge of unreacted slurry to the waste processing equipment, there should be no adverse impact on the FGD system. Transient conditions causing an increase in flue gas flow may produce scaling of the mist eliminator or excess liquid carryover. A trip of the upstream particulate control device can result in a system shutdown because the FGD system will generally not be able to withstand the impact of fly ash (increase in solids loading) for an extended period of time. Inability of the FGD system to process flue gas can lead to a boiler upset and removal of the unit from service. Failure of a single module can lead to a reduction of unit/station output. The inability to process slurry bleed for waste disposal could impair FGD operations and station output due to waste slurry buildup. Since

waste processing systems usually incorporate some spare capacity, station output should only be reduced, at worst.

2.5.3.5 Operating Staff and Training. The size, experience level, responsibilities, and training of the operating staff are significant factors in FGD system performance. In staffing, the absorber and waste disposal operations must be considered separately. In addition to the normal complement of equipment operators and supervisory personnel on the operating crew of each shift, certain specialists should always be available to assist them. Chemical engineers are essential for evaluating system operating conditions. Chemical laboratory technicians are needed to analyze the process chemistry.

2.5.3.6 Preventive Maintenance Programs. Preventive maintenance is the practice of maintaining system components in such a way as to prevent malfunctions during periods of operation and to extend the life of the equipment. The goal of preventive maintenance is to increase availability of the FGD system by eliminating the need for emergency repair ("reactive maintenance").

The term preventive maintenance is synonymous with periodic maintenance. Such procedures may be as simple as lubrication of a pump or as complex as complete disassembly for inspection and overhaul. Some of the more important preventive maintenance procedures by subsystems are summarized in the following sections:

- Absorbers. Of primary concern in the absorber module is the integrity of the structural materials. Maintenance personnel should enter and inspect the absorber module at least semi-annually.

- Mist Eliminators. Scale deposits typically are the chief maintenance factor with mist eliminators. The mist eliminator may be subject to nonuniform flow or a faulty wash system. Wash spray pressure should be monitored. Mist eliminators should be inspected during forced or scheduled outages.

- Reheaters. Both in-line and indirect reheaters are subject to scaling and corrosion. In addition to

visual inspection, pressure testing and measurement of heat transfer efficiency are useful in quantifying the magnitude of a reheater problem. In an indirect reheat system, the mixing chamber and the air heating equipment must be checked routinely.

- Dampers, Fans, Ductwork, and Chimneys. All points in the system must be checked for integrity of lining materials and for damage resulting from collection of condensation products in stagnant air spaces (e.g., duct elbows and corners). Components located in the wet portion of the system are subject to scaling and corrosion. Upstream fans and ductwork may be subjected to erosion.

- Reagent Preparation. Reagent preparation subjects the ball mill or slaker to abrasive wear. Because the equipment sees intermittent service, it should be inspected visually each time it is placed in service. Annual disassembly is also needed to check for excessive wear.

- Reagent Feed. Maintenance of the reagent slurry feed system is critical because failure of this equipment strongly impacts the FGD system operation. The slurry storage tank should be checked daily for leakage and associated equipment inspected for proper operation.

- Pumps, Pipes, and Valves. Slurry pumps are normally disassembled at least annually. The purpose of the inspection is to verify lining integrity and to detect wear and corrosion or other signs of potential failure. Bearings and seals are checked but not necessarily replaced. Pipelines also must be periodically disassembled or tested in other ways (e.g., hand-held nuclear and ultrasonic devices) both for solids deposition and for wear. Valves must be serviced routinely, especially control valves.

- Thickeners. Thickener coatings should be inspected periodically to prevent corrosion. Drag rakes, torque arms, and support cables must also be inspected for wear.

- Waste Disposal Equipment. Secondary dewatering devices, mixing components, and transport equipment must also have periodic maintenance to check for abrasive wear and solids deposition. Vacuum filters, both drum and belt type, require periodic replacement of the filter media. In a centrifuge, both the scroll coating and the bowl surfaces are subject to wear.

- Process Instruments and Controls. All electronic equipment (pH, flow, pressure, temperature, level, vibration, noise, and continuous monitors) must be calibrated periodically. Numerous installation and maintenance techniques have proved beneficial in ensuring the reliability of sensors. Ease of access to the sensors is very important. The sensors should be cleaned and calibrated routinely. Experience with process instrumention and controls in FGD systems has shown that a good preventive maintenance program begins with daily operating procedures. Proper use of instruments will include daily flushing of most instrument lines in slurry service just before monitoring of process variables. Routine comparison of the instruments in a process stream with similar instruments in parallel streams can point out incipient failures. Operating data, especially from the startup test program, can also indicate potential problem areas.

2.5.3.7 Unscheduled Maintenance. Even the most rigorous preventive maintenance program will not prevent random failures to which the maintenance staff must respond. Most malfunctions are correctable by unscheduled (reactive) maintenance. In some situations, usually during initial system startup, design modifications may be required to bring the system into compliance with operating standards. Each subsystem of the FGD system is subject to malfunctions from a variety of causes. The discussion that follows introduces these problems and the probable responses.

- Absorbers. Structural failure of absorber internals and recycle pump suction screens have occurred as a result of excessive vibration, uncorrected corrosion damage, or high pressure differentials. These malfunctions must be repaired immediately before operation is resumed.

- Mist Eliminators. Failure of the mist eliminator is typically due to scaling and plugging. The scale may be removed either by thorough washing or by mechanical methods, in which maintenance personnel enter the absorber and manually chip away the scale deposits.

- Reheaters. Reheater malfunctions include tube failures in in-line reheaters, damper problems in bypass reheat, or nonuniform flows in indirect reheaters. Correction of these problems will probably necessitate changes in equipment design.

- Fans. Fans can develop vibrations resulting from deposition of scale in wet service or from erosion of blades in dry service. The cause of the vibration must be eliminated and the fan repaired and rebalanced.

- Ductwork. Most problems associated with ducts develop over a long period. Sudden or gross failures, such as a major leak, call for immediate repair. Temporary repair or patching may suffice until the next scheduled outage. Acid condensation in a chimney can cause lining deterioration and subsequent damage to the base metal. These problems are usually identified during preventive maintenance inspections and require long-term solutions.

- Reagent Feed. Malfunctioning components such as ball mills or slakers must be repaired in accordance with the manufacturer's instructions. Some facilities have experienced trouble with plugging of the lime or limestone feeder due to intrusion of moisture. Correction of these problems will probably necessitate changes in equipment design.

- Pumps, Pipes, and Valves. Excessive wear of the impeller or separation of the lining from the pump casing is a common problem. Operation of slurry pipeline with insufficient flow velocity can cause clogging. High flow velocity or extended service can cause erosion. Malfunction and binding of a valve actuator are typically caused by wear-induced misalignment.

- Thickeners. The thickener underflow can become plugged because of excessive solids in the slurry or failure of the underflow pump. A plugged underflow or rapidly settling waste solids will produce a "heavy" blanket in the bottom of the thickener. The rake must then be raised so that the torque remains within acceptable limits. If the torque cannot be kept within limits, the thickener must be drained and the sludge blanket removed manually.

SECTION 3
PERFORMANCE MONITORING

Performance monitoring is a major element in the O&M activities of every lime/limestone slurry FGD system. Monitoring the FGD system is required to demonstrate compliance with applicable standards as well as to demonstrate that the system meets the vendor performance guarantees. Additionally, routine monitoring can identify potential operating problems before they significantly impact the performance of the system and/or the generating unit. This section is devoted to lime/limestone slurry FGD system performance indicators and their measurement. Addressed in this section are the instrumentation systems that measure process parameters, manual testing and continuous emission monitoring methods used for emission measurements, and recordkeeping practices of the operator utility. This information is presented from the perspective of the agency inspector. Namely, what monitoring techniques will yield what kinds of data, how are these data recorded and logged, and how to interpret these data in terms of SO_2 compliance status.

3.1 KEY OPERATING PARAMETERS AND THEIR MEASUREMENT

The key operating parameters can be described according to the FGD circuits identified in Section 2.5 (FGD O&M Considerations). The gas circuit parameters of importance are SO_2, NO_x, opacity, O_2, gas volume, and pressure. The slurry circuit parameters of importance are pH, solids, and slurry volume. The measurement values associated with these parameters, when assessed, give the entire picture of FGD system performance and compliance status.

3.1.1 Gas Circuit Parameters

3.1.1.1 SO_2. Coal-fired boilers governed by the revised NSPS of June 1979 are required to continuously monitor SO_2 emissions to demonstrate compliance with standards. In general, all FGD-equipped, coal-fired, utility boilers are equipped with SO_2 continuous emission monitors. They generally take the form of stack monitors. In many cases, FGD inlet and outlet SO_2 monitors are provided to continuously measure SO_2 removal efficiency across the system (and/or the individual absorber modules). Theoretically, these monitors can be instrumented into the process control network through feedforward or feedback reagent feed control loops. To date, these control strategies have been researched and developed and used intermittently in commercial operations. However, simple slurry pH control (Section 3.1.2.1) continues to provide adequate process control monitoring.[2]

3.1.1.2 NO_x. A continuous monitor is used in the stack to comply with NSPS monitoring requirements.

3.1.1.3 Opacity. To satisfy the NSPS continuous monitoring regulations, the opacity at the outlet of the FGD system (stack monitor) must be measured every 10 seconds. The data must be averaged and recorded every 6 minutes, with a minimum of 24 equally spaced data points being used in the average.[7]

3.1.1.4 O_2. An O_2 monitor is used to convert continuous monitoring pollutant (i.e., SO_2 and NO_x) concentration values to NSPS units ($lb/10^6$ Btu). The O_2 basically serves as a diluent gas. For existing sources, an O_2 monitor is required only if state law requires data for converting to the emissions standard. The equations used for this conversion are shown in Appendix B. The O_2 monitor must be located at a point where measurements can be made that are representative of the pollutant gases sampled by the SO_2/NO_x monitors. The O_2 monitor sampling point location conforms best with this requirement when it is at approximately the same point in the duct as the SO_2/NO_x system. The O_2 gas

sample may be extracted from a different duct location if the stack gas is nonstratified at both locations and there is no leakage of air into the duct between the two sampling points. If the O_2 monitor sampling point is at a different location from the SO_2/NO_x sample point and stratification exists in the duct, a multipoint extractive probe must be used for sampling. This is also true for the monitoring system when the O_2 and SO_2/NO_x monitors are not of the same type (i.e., one is extractive and the other in-situ).[7] A CO_2 monitor can also be used in place of the O_2 monitor.

3.1.1.5 Gas Flow Rate. The FGD system must continuously respond to variations in gas flow rate. If multiple absorbers are used, a dependable system to balance flow rates between parallel modules must be provided. Because the boiler and FGD system are often designed as separate units and frequently have separate control rooms, controller coordination is essential.[3]

The flue gas flow rate is a major operating variable and is controlled in proportion to the generating unit load by adjusting control dampers on the unit or FGD booster fans (see Section 2.4.2.1). The volumetric flow rate can be estimated from the stack gas velocity or, alternatively, from the fan performance curves provided by the manufacturer. The latter procedure should be used only as a check to validate the data from the first method.

Gas pressure sensors are extremely important as a means of gas flow rate indication, load-following control, and problem indication. The simplest method, and the one used in most FGD systems to equalize gas flow through the multiple modules, is the use of pressure drop. The total pressure drop through a module is the sum of the losses through the inlet and outlet ductwork, absorber, mist eliminator, and reheater (if present). Each of these losses is a function of the gas flow treated by the module. Modules operating in parallel generally have equal pressure drops because of identical modular designs.

3.1.2 Slurry Circuit Parameters

3.1.2.1 pH. Slurry pH is the most important control parameter in lime/limestone slurry processes. Measurement of pH in slurry service is more difficult than pH measurements in many other process applications. The pH electrodes are fragile devices, easily damaged by extreme weather conditions, floating debris, and the slurry environment. Slurry can also form a deposit on the electrodes, acting as an electrical insulator and giving a false value of the electrode potential. For this reason, it is essential that pH electrodes be kept clean. However, despite these limitations, slurry pH is universally accepted because of its simplicity and widespread use. The pH measurement location is an important consideration. There are three main choices: (1) the spent slurry upstream of the reaction tank; (2) the fresh slurry feed to the absorber; and (3) in the slurry reaction tank itself. The favored choice of the utility industry is the reaction tank.

3.1.2.2 Slurry Flow Rates. Measurement of slurry flow rates is vital to the optimization of the process. The flow rate of fresh slurry is perhaps the most important control application; however, the flow rates of slurry recirculation and slurry bleed streams are also vital control operations. The slurry flow rates are used to control the absorber L/G (see Section 2.3.2.2) which is a vital operational and performance factor.

3.1.2.3 Solids Content. There are three areas where the solids content of the slurry is controlled: slurry feed, slurry recirculation, and thickener underflow. Once the stoichiometric ratio is properly maintained, the solids level can vary without being critical to the operation of the absorber. A consistent slurry solids level, along with proper stoichiometry, can reduce plugging and deposits in the absorber, minimize erosion, and reduce the volume of solid waste.[3]

3.2 INSTRUMENTATION

To date, the extent of instrumentation used on lime/limestone FGD processes has been relatively limited. Moreover, much of the instrumentation used in existing systems has suffered reliability problems. This section describes the different types of instrumentation used for the measurement of some of the important performance monitoring parameters addressed in Section 3.1.2. Instrumentation described includes process control applications for monitoring pH, slurry flow rates, and solids content. SO_2 monitors are addressed in Section 3.3.

3.2.1 pH Instrumentation

There are two types of pH sensors: immersion (dip-type) and flow-through.[8] The immersion sensor is merely inserted into a tank and can be removed for maintenance and calibration. A flow-through sensor depends upon a continuous flow in the sample line. Both have advantages and disadvantages. The immersion sensor is easier to operate and maintain. Performance can also be improved by locating the sensor in a special sampling tank, by using redundant sensors, and by frequent cleaning and calibration. The flow-through pH sensor is prone to wear and abrasion. Maintenance to ensure good performance of flow-through sensors is much easier when (1) the sample lines are short and relatively large in diameter, (2) the sample taps are located at the top or side of the slurry line, (3) back-flushing capability is provided, and (4) a deflector bar is installed upstream from the sensor to reduce erosion. Redundant sensors are also desirable for the flow-through type but are not as easy to provide.

Practice has differed in regard to both the method and frequency of cleaning the pH sensors to remove scale. Ultrasonic self-cleaning devices have been used, but in numerous cases have caused cell breakage. The best method seems to be manual removal and washing with acid on a regular schedule. Lime systems are less susceptible to scale formation problems on sensor elements

than limestone. In many existing systems, improper design limits the access to the pH sensors, resulting in inadequate service. Some utilities have reported the buildup of a film on the probes of immersion sensors. A properly designed electrode station should have easy access for pH sensor maintenance. If possible, each pH sensor should have a maintenance station equipped with a workbench, a cabinet to hold spare parts, small tools, and standardizing solutions. Tables 3.2-1 and 3.2-2 summarize the pH instrumentation used in a number of representative lime and limestone slurry FGD systems.

3.2.2 Slurry Flow Rates

Instrumentation measuring slurry flow falls into three broad categories: mechanical measurement of pressure differential, electronic measurement, and measurement in open channels. Each category has its specific applications.

Mechanical flowmeters are not suitable for abrasive slurry environments. The more acceptable meters for this service are electronic devices. Electronic measurement of flow rate are accomplished with Doppler-effect ultrasonic meters and electromagnetic flowmeters. The Doppler-effect ultrasonic meter is a fairly new development for slurry applications. The principal advantage of this device is that the electrodes are attached to the outside of the pipe through which the slurry is flowing; there is no penetration of the pipe. The electromagnetic flowmeter, or "magnetic meter," is the best proven instrument available for the measurement of pressurized slurries. It consists of a stainless steel pipe section lined with an electrically insulated material. The magnetic meter does not require installation in straight piping. It has no operating parts in contact with the fluid, produces very little pressure drop, and is fairly accurate. The only disadvantage of the magnetic meter is its high capital cost and the closer attention required for instrument calibration.

TABLE 3.2-1. pH INSTRUMENTATION ON LIME SLURRY FGD SYSTEMS[2]

Plant name	Manufacturer	pH Electrode Assembly			
		Type	Location	Single/ multiple	Cleaning type
Pleasants 1 and 2	Uniloc	Flow-through	Absorber inlet, outlet	Multiple	Ultrasonic
Four Corners 1, 2, and 3	Uniloc	Immersion	Slurry bleed	Multiple	Manual
R. D. Green 1 and 2	Leeds & Northrup	Immersion	Reaction tank	Multiple	Ultrasonic
Conesville 5 and 6	Foxboro	Immersion	Slurry bleed, reaction tank	Multiple	Manual
Coal Creek 1 and 2	Uniloc	Immersion	Reaction tank	Multiple	Ultrasonic
Elrama	Uniloc	Flow-through	Slurry bleed	Single	Ultrasonic
Phillips	Uniloc	Flow-through	Slurry bleed	Single	Ultrasonic
Green River	Uniloc	Immersion	Reaction tank	Multiple	Manual
Cane Run 4	Uniloc	Immersion	Reaction tank	Multiple	Manual
Mill Creek 3	Uniloc	Immersion	Reaction tank	Multiple	Air
Paddy's Run 6	Uniloc	Immersion	Reaction tank	Multiple	Manual
Clay Boswell 4	Uniloc	Immersion	Reaction tank	Multiple	Ultrasonic
Milton R. Young 2	Uniloc	Immersion	Slurry bleed	Single	Manual
Bruce Mansfield 1 and 2	Uniloc	Flow-through	Slurry bleed	Single	Manual
Bruce Mansfield 3	Uniloc	Immersion	Reaction tank	Multiple	Manual
Hunter 1 and 2	Uniloc	Flow-through	Slurry bleed	Single	Ultrasonic
Huntington 1	Uniloc	Flow-through	Slurry bleed	Single	Ultrasonic

TABLE 3.2-2. pH INSTRUMENTATION ON LIMESTONE SLURRY FGD SYSTEMS[3]

Plant name	Manufacturer	Type	Location	Single/ multiple	Cleaning type
Tombigbee 2 and 3	T. B. I.	Flow-through	Reaction tank	Single	None
Apache 2 and 3	Great Lakes Instrument Co.	Immersion	Quencher sump	Single	Manual
Laramie 1 and 2	Great Lakes Instrument Co.	Flow-through	Recirculation slurry	Single	Ultrasonic
Craig 1 and 2	Uniloc	Immersion	Recirculation slurry	Single	Ultrasonic
Powerton 51	Uniloc	Immersion	Recirculation slurry	Single	Ultrasonic
Petersburg 3	Leeds & Northrup	Flow-through	Recirculation slurry	Multiple	Ultrasonic
LaCygne 1	Uniloc 320-K-1	Flow-through	Recirculation slurry	Multiple	Water flush
Jeffrey 1 and 2	Uniloc	Immersion	Reaction tank	Single	Ultrasonic
Lawrence 4 and 5	Uniloc	Immersion	Reaction tank	Multiple	Ultrasonic
Sherburne 1 and 2	Uniloc	Flow-through	Recirculation slurry	Single	Manual
Coronado 1 and 2	Uniloc	Flow-through	Recirculation slurry	Multiple	Ultrasonic
San Miguel 1	Leeds & Northrup	Flow-through	Recirculation slurry	Single	Ultrasonic
Sikeston 1	Leeds & Northrup	Flow-through	Recirculation slurry	Single	Ultrasonic
Winyah 3	Leeds & Northrup	Flow-through	Recirculation slurry	Multiple	Ultrasonic
Winyah 4	Leeds & Northrup	Flow-through	Reaction tank	Multiple	Ultrasonic
R. D. Morrow 1 and 2	Leeds & Northrup	Immersion	Reaction tank	Single	Ultrasonic
Marion 4	Uniloc	Flow-through	Recirculation slurry	Single	Manual
Southwest 1	Beckman/Foxboro	Immersion	Reaction tank	Multiple	Manual
Dallman 3	Beckman	Flow-through	Recirculation slurry	Multiple	Water flush
Sandow 4	Uniloc	Immersion	Reaction tank	Single	Ultrasonic

3.2.3 Solids Content

All lime/limestone FGD systems include instrumentation for monitoring the solids level of fresh feed slurry, recycle slurry, and thickener underflow streams. Densinometers are used to monitor and control the solids in slurry streams and tanks. Slurry density can be measured directly with special differential pressure instruments, requiring a minimum liquid depth of 6 ft to measure a span of 0.1 specific gravity units. Ultrasonic devices directly measure the suspended solids. Vibrating reed instruments measure the dampening effect of the slurry on vibrations from an electrically driven coil. Nuclear density meters which measure the degree of absorption of gamma rays from a radioactive source are the most popular because of ease of application. The meter can be strapped to a pipe without insertion into the pipe line. The only problem with these meters has been their periodic inaccuracy and inconsistency. At several facilities, density measurements are often verified by manual measurements (e.g., laboratory analysis of grab samples).

3.3 TESTING AND MONITORING

This section describes manual testing and continuous emissions monitoring (CEM) methods used to collect FGD gas stream data.

3.3.1 Manual Testing

Manual sampling and analysis of the flue gas at the inlet and outlet of the FGD system are required periodically to evaluate its performance. Sampling ports must be incorporated during the design and construction of the FGD system to facilitate several sampling procedures which require a variety of probes and collection equipment. Sampling operations for FGD systems are aimed primarily at characterizing the gas flow, particulate mass loading and size distribution, and gas composition. The gas flow at the sampling points must be stable to ensure collection of a

representative sample and obtain accurate information regarding flow rate. Bends and expansion and contraction zones in the flow path can induce secondary flows such as vortices, rotation, and large eddies. Sufficiently long runs of a straight uniform duct are recommended at the sampling location before and after the sampling point. Another factor is the ease in the operation of the sampling equipment. Proper orientation of the sampling port and availability of a clear platform area near the port are other necessary criteria for testing.

Most interfaces for sampling from ducts are designed to be compatible with 3-inch Schedule 40 pipe nipples used as sampling ports. Occasionally, an experimental system has required a 4- or 6-inch opening. The size of the port necessary to insert a probe also depends on the length of the port opening. Other considerations include availability of diametrically opposite ports so that opacity monitors may be installed, if necessary.[9]

Table 3.3-1 presents a list of gas stream characteristics and measurement methods for lime/limestone FGD systems. Of particular interest to FGD technology is the SO_2 manual sampling method. EPA Method 6 is the reference method for determining emissions of SO_2 from all stationary sources except sulfuric acid plants. In sampling for SO_2, a gas sample is taken at a single sampling point located at the center of the stack or no closer to the wall than 3.28 feet. The sample must be extracted at a constant volumetric rate. This requires adjustments of the extraction rate to compensate for any changes in stack gas velocity. As the gas goes through the sampling apparatus, the sulfuric acid (H_2SO_4) mist and sulfur trioxide (SO_3) are respectively removed using glass wool (borosilicate or quartz) and a solution of isopropanol; the SO_2 is then removed by a chemical reaction with a hydrogen peroxide solution. The sample gas volume is measured by a dry gas meter. Upon completion of the run, the H_2SO_4 mist and SO_3 are discarded, and the collected material containing the SO_2 is recovered for laboratory analysis. The

TABLE 3.3-1. SUMMARY OF MANUAL EMISSIONS MEASUREMENT METHODS FOR AN FGD SYSTEM ON A COAL-FIRED UTILITY BOILER

Measurement	Sampling method	Apparatus	Reference
Traversing points	Method 1	-	40 CFR 60, Appendix A, July 1, 1985
Velocity and volumetric flow rate	Method 2	Type "S" pitot tube	40 CFR 60, Appendix A, July 1, 1985
Particulate mass loading	Method 5	Sampling train cyclone/ filter holders (>225°F)	40 CFR 60, Appendix A, July 1, 1985
SO_2	Method 6	Pyrex probe, impingers	40 CFR 60, Appendix A, July 1, 1985
NO_x	Method 7	Pyrex probe, collection flask	40 CFR 60, Appendix A, July 1, 1985
SO_2, SO_3, and H_2SO_4	Method 8	Pyrex probe, impingers	40 CFR 60, Appendix A, July 1, 1985
Opacity	Method 9	Visual, qualified observer	40 CFR 60, Appendix A, July 1, 1985

concentration of SO_2 in the sample is determined by a titration method.

For determination of the total mass emission rate of SO_2, the moisture content and the volumetric flow rate of the exhaust gas stream must be measured. The minimum sampling time is 20 minutes per sample, and two separate samples constitute a run. Three runs are required, resulting in six separate samples. An interval of 30 minutes is required between each sample. Longer sampling times may be required if a larger sample is needed.

SO_2 concentrations of 50 to 10,000 parts per million (ppm) can be determined with this method. Collaborative tests have shown that an experienced test team using quality controls can conduct a source test for SO_2 within an accuracy range of ±4 percent.

Other sampling methods are available which utilize different chemical solutions, such as a sodium hydroxide solution, to trap the SO_2. EPA Method 8 may also be used as an alternative method for stationary sources. Some states specify a sampling method that collects H_2SO_4, SO_3, and SO_2. The analysis then gives total SO_x.

3.3.2 Alternative Methods

There is an alternative manual method to EPA Method 6. This is the proposed Method 6B. In this method, intermittent samples are drawn through a modified Method 6 sample train using a 24-hour timer. This method measures CO_2 in addition to SO_2. The samples collected in the train are recovered and analyzed on a daily basis. Collaborative testing to demonstrate this method is now underway. The high capital intensity of a conventional CEM program could be replaced with a low cost but equally O&M-intensive Method 6B testing program. Method 6B could also be used as a back-up to generate data during CEM outages, thus eliminating the need for expensive parts inventory and highly trained technicians.

3.3.3 Continuous Emissions Monitoring (CEM)

There are many instruments available for monitoring gaseous emissions from stationary sources. Gas monitoring systems may be either extractive, in-situ, or remote. The monitors utilize various physical or chemical properties to detect and quantify components in the flue gas, as shown in Table 3.3-2. The methods used may be in-situ (the measurements are conducted on the flue gas inside the stack) or extractive (a sample is withdrawn from the stack). The basic problem common to all CEM systems is that any sophisticated analytical technique will suffer when exposed to a hostile flue gas environment (e.g., heat, humidity, corrosive gases, and fly ash). The challenge in designing, installing, and operating a CEM system, therefore, is to minimize the harsh effects of the stack environment, maximize the precision and accuracy of the effluent pollutant measurements, and accomplish both at a reasonable cost. To monitor SO_2, the CEM system must determine the concentration of the pollutant and also the concentration of a diluent gas (O_2 or CO_2).

Every CEM system can be divided into three components, as shown in Table 3.3-3. The immediate drawback to the in-situ system is the very fact that the analyzer is mounted on the stack. The optical alignment of the light source and the retroreflector is critical. This can be a problem on composite stacks with fiberglass or stainless steel liners because these liners have the ability to flex. A slotted pipe can be added across the stack to insure the absolute alignment of the optical components. Further, in in-situ systems, the optical components on either side of the stack are exposed to the corrosive stack gas. An air purging system is provided to keep the components clean but periodic maintenance will still be required.

Extractive CEM systems depend on the reliable operation of the sample interface. Many potential problems exist in an extractive sample interface. The probe is constantly subjected to a corrosive and erosive atmosphere. Carryover of slurry from

TABLE 3.3-2. PRINCIPLES USED IN GASEOUS EMISSION MONITORS[a]

Extractive systems	In-situ systems
Absorption spectroscopy Nondispersive infrared Differential absorption	Cross-stack Differential absorption Gas-filter correlation
Luminescence methods Chemiluminescence (NO_x) Fluorescence (SO_2) Flame photometry	In-stack Second-derivative spectroscopy Electrocatalysis (O_2)
Electroanalytical methods Polarography Electrocatalysis (O_2) Amperometric analysis Conductivity Paramagnetism (O_2)	

[a]Methods followed by the gas (in parentheses) indicate that the technique is currently commercially applied only to that gas.

TABLE 3.3-3. CEM SYSTEM COMPONENTS

Sample interface		Analyzer	Data recorder
In-situ	Extractive		
Mounting brackets	Probe	Pollutant (SO_2, NO_x)	Strip chart recorder
Alignment devices	Filters	Dilutent (CO_2, O_2)	Data logger
Optical components	Moisture removal		Remote (shared) computer
Retroreflectors	Sample line		Microcomputer
Blowers	Pump		

the FGD process can be a serious problem. Slurry which deposits on the probe will scrub SO_2 out of the sampled gas. The buildup of particulate and slurry solids will plug the probe. Shielding the coarse filter with a baffle will reduce the problem. A periodic blowback to purge the probe (air or steam) is also common.

The sample pump is another point in the system that has potential problems because it is subjected to constant wear. Preventive maintenance programs are necessary to keep the pumps operable. The sample line and probe must be heated to prevent condensation prior to the moisture removal system. The large number of fittings needed to connect all of these components contribute to leaks in the extractive interface. As a result, this type of system will require constant attention although this maintenance does not require special training.

A comparison of in-situ and extractive systems reveals that neither system is superior overall. However, most stack monitoring systems are extractive rather than in-situ. A single extractive analyzer can monitor one component in the gas stream at more than one source, whereas a single in-situ analyzer can monitor more than one component but only at a single source. High levels (90 percent or greater) of reliability have been reported for at least one of every type of CEM system in use. The extent of trouble-free operation generally appears to be directly proportional to the level of management commitment to the ongoing maintenance of the CEM system.

3.3.4 Performance Specification Tests

Continuous monitoring instruments must pass the Performance Specification Test requirements given in Part 60, Appendix B of the Code of Federal Regulations (CFR). These tests evaluate the performance characteristics of opacity, SO_2, NO_x and O_2 or CO_2 monitors. There are three types of tests:

- Performance Specification Test 1 - Transmissometer Systems

- Performance Specification Test 2 - SO_2/NO_x Systems
- Performance Specification Test 3 - O_2 or CO_2 Monitors

A detailed description of these tests is presented in the "Continuous Air Pollution Source Monitoring Systems Handbook" (EPA 625/6-79-005).[7]

3.4 RECORDKEEPING PRACTICES AND PROCEDURES

The primary reasons for FGD recordkeeping are cost and environmental compliance accountability. The types of records kept may be in the form of strip charts, numerical data printouts, manual log books, or work order sheet files. The collection frequency depends upon the data. Maintenance records may be updated daily via log books or whenever work order sheets are filed upon completion of a given task. Most utilities collect SO_2, NO_x, particulate, opacity, and O_2 continually, using continuous emission monitors in the form of strip charts or computer disk or tape files.

The development of a CEM system extends beyond the choice of a set of analyzers. The analyzers must measure emissions within specified time periods. The measurements, however, must then be recorded in some manner. After the data are recorded, they must be converted into units of the emissions standard, ($lbs/10^6$ Btu). Calculated emission values that are in excess of the standard must then be reported on a quarterly basis to the EPA Administrator. In addition, the guidelines stipulated in the Federal Register (40 CFR, Part 60.7, Appendix B) require the reporting of the following:

- Time and magnitude of excess emissions
- Nature and/or cause of excess emissions
- Corrective and/or preventative action taken to prevent their recurrence
- Zero/span calibration values

- Normal measurement data
- Log of inoperative periods
- Repair and maintenance logs
- Performance, test, calibration data

For sources subject to the June 1979 NSPS, calculated emissions reports are required as 24-hour averages whether in excess of the standard or not. A complete emissions monitoring system, therefore, requires some means of recording the analyzer data. Strip-chart recorders have been used most often, but data loggers and computer systems are beginning to become popular. Data processors have been developed specifically to reduce the time necessary to evaluate and report excess emissions.

A data reporting system may encompass anything from the manual reduction of raw strip chart data and compilation of associated data to the near fully automatic preparation of complete excess emission reports, including most of the aforementioned data requirements. The choice of the data reduction and reporting system may be the most important factor in the overall emission monitoring system, because it greatly affects the amount of manual effort involved in meeting the NSPS requirements.

The data generated by the monitoring instruments give much more information than is actually required. The actual data that can be used to satisfy measuring requirements may be of three types:

- Instantaneous values taken at the end of each time period
- Values obtained by integrating data over each time period
- Values obtained by averaging a number of data points over each time period

The method used will often be determined by the type of analyzers purchased and by the recording method employed. The

measuring requirements are tied in with the recording requirements. A consideration of both will dictate the choice of the complete monitoring system.

A monitor may produce a continuous trace on a strip chart for a 6-minute or 1-hour period; a larger amount of data may be obtained than is actually used. The regulation, however, specifies only the minimum number of points that need to be averaged and recorded. It is often easier to design systems that integrate the continuous data over the averaging periods.

There are a variety of methods used to record data from analytical devices. The strip-chart recorder is encountered most frequently in continuous source monitoring applications. A continuous analog record is obtained by using some type of chart recorder.

Because the recorder is a part of the continuous monitoring system, the response time, drift, and accuracy requirements established in the EPA performance specifications must be considered when choosing the recorder itself. If a recorder is chosen that has poor response time and limitations in recording accuracy, the overall monitoring system will suffer. There are many factors that contribute to the relative inaccuracy (relative to the EPA reference method) of a monitoring system. The recording system does not need to be one of these factors if a proper choice of the system is made initially.

The analog chart recorders give a continuous record of the signal produced by an analyzer. The digital recorder or data logger, however, selects some value (either an instantaneous or integrated value) after a given time period and records it. For this reason, a digital system may be characterized as recording data over intermittent periods. These periods may be short, a tenth or hundredth of a second or less; but for such a short period, the printed data produced might be unmanageable.

It should be noted that a data logger is not a computer or a microprocessor. A computer can process data, convert it into

emission rates, and record it in specified formats. Data loggers merely record data at specified intervals. There are two options available on digital recorders that extend their utility. These are an alarm-monitoring capability and the ability to print out by exception. A data logger, therefore, could be set to send off an alarm or print out data once a specified value is reached. It could not, however, compute the emission rate by any specific method and print it. A microprocessor or computing system would be necessary in this case.

The difficulty of detecting trends has been overcome in some systems by recording the digital data on floppy disk or cassette tape. The disk or tape can be read on a computer and the data then can be graphed automatically with a plotter. This method provides a convenient means of storing the continuous monitoring record. Diskettes and cassette tapes are easily handled and cataloged and detailed graphs need only be reproduced when desired.

The most convenient method of handling continuous monitoring data is with a data processor. Several firms involved in the manufacture of stack monitors have seen the need for instrumentation that will rapidly average and compute data in terms of the emission standard. There are two data processing methods that generally are used in continuous monitoring systems:

- Analog-to-digital (A/D) large general purpose computer or data processing system.
- Dedicated continuous monitor data acquisition system.

The dedicated systems may save time and money in the long run. Many source operators will first purchase the gas analyzers and rely on strip-chart output for the data-recording requirements. If the monitoring system is working properly and the data are reliable, consideration is given to a data processor in order to reduce the amount of time spent analyzing what can amount to volumes of data. Many operators have found it convenient to keep

the chart recorders to provide an easily interpreted record of the trends occurring during the source operation. Cross checks then can be made between the two systems; if either malfunctions, the data may not be lost.[7]

The problem of monitoring equipment malfunctions is a matter of serious concern to the continuous monitoring program. Obviously, an improperly operating continuous monitor serves neither the source operator nor the control agency. In order to keep aware of the instrumental problems that inevitably develop, occasions of instrument downtime, repair, or significant readjustment also must be documented and explained in the quarterly report to EPA. Many agencies are now developing inspection programs for these systems in an effort to ensure that reliable emissions data can be obtained.

The operator utility also must maintain a file of all of the continuous monitoring data, including records of the Performance Specification Test, adjustments, repairs, and calibration checks. The file must be retained for at least 2 years and is required to be maintained in such a condition that it can be easily inspected by an agency field inspector.

SECTION 4
INSPECTION METHODS AND PROCEDURES

This section presents detailed procedures and guidelines for the inspection of lime/limestone slurry FGD systems. The objective of this section is to assist the agency inspector in his/her duties of examining the FGD system, looking first for telltale signs that might suggest misrepresentations of emissions such as faulty monitors or leakage in or out of ducts, and looking secondly for factors in addition to SO_2 removal efficiency that suggest poor reliability of the FGD system. If excess emissions are reported, this section guides the inspector in collecting information for the determination of causes of the problem and the assessment of remedial action(s) taken by the utility. When no excess emissions are reported, procedures suggested herein allow the inspector to assess the preventive actions taken by the utility. It is important that the inspector make specific observations and record pertinent data in order to make intelligent decisions for resolving compliance problems or processing variance requests.

The information in this section is presented in a practical fashion that facilitates comprehension by regional/state agency personnel; theoretical principles underlying the inspection procedures are not discussed. The inspection procedures are presented in a user-friendly format.

The section begins with a brief discussion on inspection procedures for the overall plant and is followed with detailed inspection procedures addressed by equipment area and equipment items in the order presented previously in Section 2.4.2 (Existing Design Configurations). Inspection procedures for each

equipment item are comprised of an inspection checklist, an illustration (where applicable) showing the relative sizes of the associated components, and brief supporting text. Performance parameters addressed in the equipment inspection checklists are classified under three categories (observation, process, and operation and maintenance) to facilitate the interpretation and evaluation of data obtained during inspections. The various checklists presented in this section are compiled together in Appendix C to assist the inspector during an inspection.

The interpretation of the performance data observed and collected by the inspector is discussed in the following section (Section 5, Performance Evaluation and Problem Diagnosis/Correction). The checklists in this section include references to appropriate locations in Section 5 which address the significance of the recommended inspection procedures. Section 6 (Model O&M Plan) elaborates on the O&M practices surveyed by the inspector during the inspection procedures. Section 7 (Safety) outlines prudent safety procedures to be followed during the inspection.

4.1 GUIDELINES FOR OVERALL PLANT INSPECTION

Before actually performing an FGD system inspection, it is advisable to collect general plant data such as information on coal characteristics, boiler data, and system generation status (see Sections 2.2, 2.5.1.1 and 2.5.1.2). Published sources of this type of information include the Utility FGD Survey[10] and the Steam Electric Plant Factors[11]. Nonpublished but available sources include the Energy Information Administration (EIA) General Utility Reference File (GURF) data base and the utility filed EIA Form 767 (formerly the Federal Power Commission [FPC] Form 67). Table 4.1-1 shows a checklist containing types of information that should be obtained prior to the FGD system inspection.

TABLE 4.1-1 GENERAL PLANT DATA

Boiler Data

- Type of firing (pulverized, cyclone)
- Boiler service load (base, intermediate, cycling, peak)
- Date of commercial operation (month, year)
- SO_2 emission limitation ($lb/10^6$ Btu)
- Particulate emission limitation ($lb/10^6$ Btu)
- Opacity limitations (%)
- Fuel firing rate at maximum continuous rating (tons/hr)
- Heat rate (Btu/net kWh)
- Average capacity factor (%)
- Gross generating capacity (MW)
- Outlet flue gas flow (acfm)
- Outlet flue gas temperature (°F)

Fuel Data

- Average heat content (Btu/lb)
- Average ash content (%)
- Average moisture content (%)
- Average sulfur content (%)
- Average chlorine content (%)

General FGD System Data

- FGD process type (lime, limestone)
- Generation type (first, second, or third)
- Application (new/retrofit)
- Initial startup date
- Commercial startup date
- Total system design SO_2 removal efficiency (%)
- Percent flue gas bypassing FGD system (%)
- Total system energy consumption (kWh)
- Annual reagent consumption (tons/year)
- Water loop type (open, closed)
- Waste disposal type (landfill, pond)
- Solid waste generation rate (dry) (tons/h)
- Total system makeup water consumption (gpm)
- Number of operators per shift
- Number of maintenance personnel per shift
- Maintenance philosophy (dedicated, rotated, pooled)

In addition to general plant data, the plant layout and accessibility should also be reviewed as this governs the approach and entry to the equipment (see Section 2.5.2). The inspector should also review the recordkeeping procedures used by the facility (see Section 3.4). Finally, the inspector should inquire about the current status of operation of the FGD system and recent status preceding the visit.

4.2 INSPECTION PROCEDURES

This section presents detailed inspection procedures for the different equipment areas. The inspection procedures are ordered sequentially by the FGD system equipment subsystems in order of their appearance in Section 2.4.2. In the field, the actual inspection will most probably be undertaken more according to convenience rather than process logic. The office location of the inspector's primary utility contact and the layout of the FGD system usually dictate the most convenient starting point for the inspection. Separate checklists are outlined for each equipment area in light of this consideration.

An inspection of the control room at the facility should, however, be undertaken prior to the inspection of the equipment. The inspector should also note that not all plant control rooms are centralized; some plants have decentralized control rooms associated with specific operations (boiler, FGD, waste disposal, etc.). The inspector should inquire about this. A control room usually includes a process schematic above the main control panel with warning or other indicator lights as well as parameter readouts to display general operating status and/or problems occurring in specific areas of the system. The "live" schematic is supported by strip charts and meters fed by sampling devices either throughout the FGD system or through the more critical areas. Much of the process-related information pertaining to the equipment checklists presented later in this section can usually

be obtained in the control room(s). Table 4.2-1 presents a checklist to be followed when inspecting the control room.

TABLE 4.2-1. CONTROL ROOM CHECKLIST

- Ask the operator to point out the monitoring device displays specific to the FGD system.
- Note any monitoring device displays that are not in operation.
- Ask the operator or other utility contact the reason the display device is out of service and what action has been taken for correction.
- Check for high/low readings on SO_2, particulate, and opacity monitoring devices (as compared to the design values).
- If the facility has an integrated computerized control (ICC) system equipped with CRT displays, ask to see sample readings for some subsystems. Feel free to ask for explanations interpreting the figures and numbers displayed.

4.2.1 Gas Handling and Treatment

4.2.1.1 Fans. Fans used in FGD systems vary in size depending on the number of fans used and their service classifications, e.g., unit or booster (see Section 2.4.2.1). Fans are generally high-maintenance equipment items. Figure 4.2-1 shows an isometric view of a typical centrifugal fan. Table 4.2-2 presents a checklist for the actual fan inspection.

4.2.1.2 Scrubbers/Absorbers. The discussion in this section focuses on absorbers because these are the most popular in second and third generation systems. The SO_2 absorber ranks third on the list of equipment areas most likely to be the focus of a forced system outage (see Section 2.5.1). Many of the third generation FGD systems include spare absorber modules to minimize the impact of a single module forced outage. Absorbers are considered to be very critical to FGD operation and perhaps represent the most important area of interest to field inspectors.

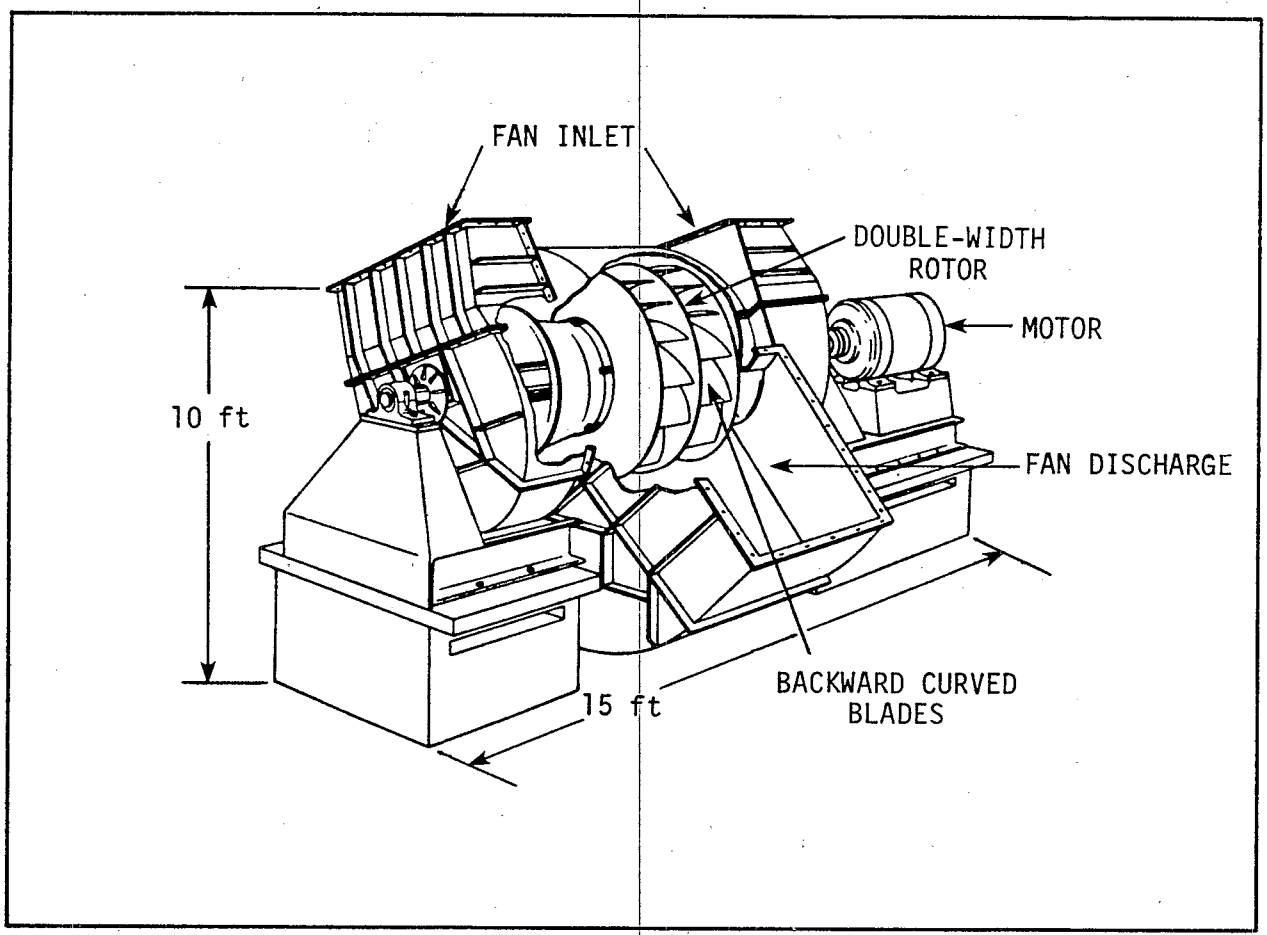

Figure 4.2-1. Isometric view of a typical centrifugal fan.

TABLE 4.2-2. FAN CHECKLIST

OBSERVATION

- Listen for excessive vibration. If the fan is not operating or if it is not obvious whether the vibration is excessive or not, consult with the utility contact. Ask if vibration/noise is monitored. If so, what are the correct readings? Is there an alarm cutoff?
- Look for signs of unusually high levels of maintenance (e.g., worn rotors on site, debris on and around housing, unusually worn access doors).
- Check for signs of corrosion and note location. Look for holes at intake/discharge and analyze duty (ID/FD) contribution.

PROCESS

- Note fan function, design application service, and location (refer to Section 2.4.2.1).
  - Unit/booster
  - Centrifugal/axial
  - ID/FD
  - Wet/dry
- What is the design/actual ΔP[a] provided by each fan? (See Section 5.2.2.2 for significance.)
- What is the design/actual gas flow rate and temperature through each fan? (See Section 5.2.2.1 for significance.)
- What is the design/actual energy consumption rate of each fan? (See Section 5.2.2.9 for significance.)

OPERATION AND MAINTENANCE

- Inquire about the incidence of bearing failure, fan blade erosion/corrosion, and rotor cracking. What were the contributing causes of these problems? What remedial actions were taken or planned?
- Inquire about routine maintenance procedures (balancing, cleaning, rotor/fan repair). What is the frequency of inspection?

[a] ΔP refers to pressure drop, typically measured in inches H_2O for gas-side operation.

The dimensions of absorbers vary widely depending on the type of absorber, the boiler gas flow, the number of absorbers included in the system design, the process type (e.g., lime or limestone), and the coal characteristics. A utility may choose to install three 50 percent capacity absorbers (including one spare), five 25 percent capacity absorbers (including one spare), or as many as 12 absorbers (including one spare) for a given facility. Spray towers need to be larger in height than packed towers for similar applications because spray towers require a higher residence time for a given volume of flue gas to make up for the lack of liquid/gas contacting area provided by packing materials. Lime systems should have slightly smaller absorbers for a given facility as compared to those for a limestone process because lime is a more reactive reagent requiring a lower L/G ratio and a lower residence time of the gas in the tower. A typical absorber designed to accommodate 100 MW of boiler flue gas capacity may be between 2 to 4 stories in height. The absorber may be rectangular or cylindrical in shape. A horizontal configuration (see Figure 2.4-4b) may be adopted instead of the more common vertical configuration (see Figure 2.4-4a).

Figure 4.2-2 shows the dimensions of a typical tray tower absorber. Because typical absorbers are likely to be several stories high, the inspector may not be able to collect all the data for the absorber at one time. It is often easier to inspect all components found at each level of the tower before moving to the next level. Table 4.2-3 provides an inspection checklist for absorbers.

4.2.1.3 Mist Eliminators. Mist eliminators are the most troublesome of all FGD system components (see Section 2.5.1, Table 2.5-3). They are prone to scaling, plugging, breakage, and deformation from high temperature excursions. Figure 4.2-3 is an illustration of a typical mist eliminator section. The sections are replaceable so that only those sections that are permanently

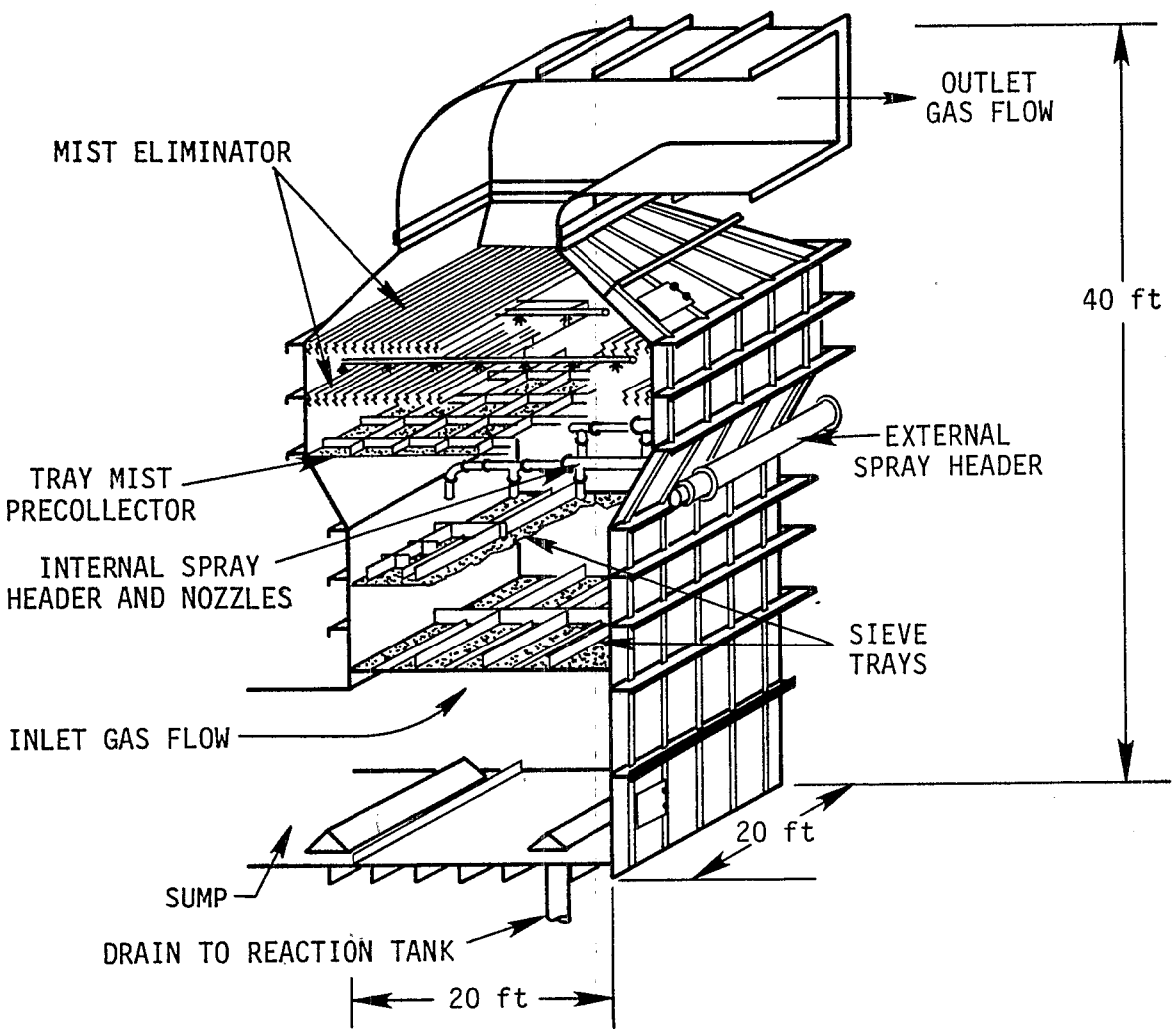

Figure 4.2-2. Typical tray tower absorber.

TABLE 4.2-3. SCRUBBER/ABSORBER CHECKLIST

OBSERVATION

- Observe any tools, debris, or other materials that may suggest excessive maintenance problems: scaling, plugging in spray nozzles and headers -- look around for broken or eroded spray nozzles. (See Section 5.2.4.3 for significance).
- Look for signs of materials failure (e.g., corrosion, liner bubbling or peeling). Note the location of the failure.
- Observe any signs of leaky piping due to erosion (e.g., corrosion, accumulation of liquid or scale around process piping).
- Look for signs of absorber slurry leakage due to erosion/corrosion (e.g., discoloration on the absorber outside walls).

PROCESS

- What are the design/actual absorber inlet particulate grain loading and SO_2 concentrations? (See Section 5.3.1.1 for significance.)
- What are the design/actual absorber outlet particulate and SO_2 emission levels? (See Section 5.3.1.1 for significance.)
- What is the ΔP across the absorber? (See Section 5.2.2.2 for significance.) Note if ΔP is low or high (if not sure of the acceptable ΔP range, ask the operator or other utility contact).
- What is the pH and slurry solids content in the absorber reaction tank? (See Sections 5.2.2.3 and 5.2.2.5 for significance.) Check if these values are high/low.
- Inquire about the slurry and gas flow rates to determine the L/G ratio. (See Sections 2.3.2.2 and 5.2.2.4 for significance.)

OPERATION AND MAINTENANCE

- Ask if absorbers have been experiencing chronic problems of any kind. If so, what remedial actions were taken or planned? Inspect internals of any absorbers which may be shut down by looking through the access door with a flashlight.
- If absorbers are idle, ask why (i.e., spare, demand, scheduled outage, forced outage).
- Are any instrumentation problems evident (pH, ΔP, % solids, slurry flow, gas flow)?
- Inquire about routine maintenance procedures. Check on the frequency of plant inspection.

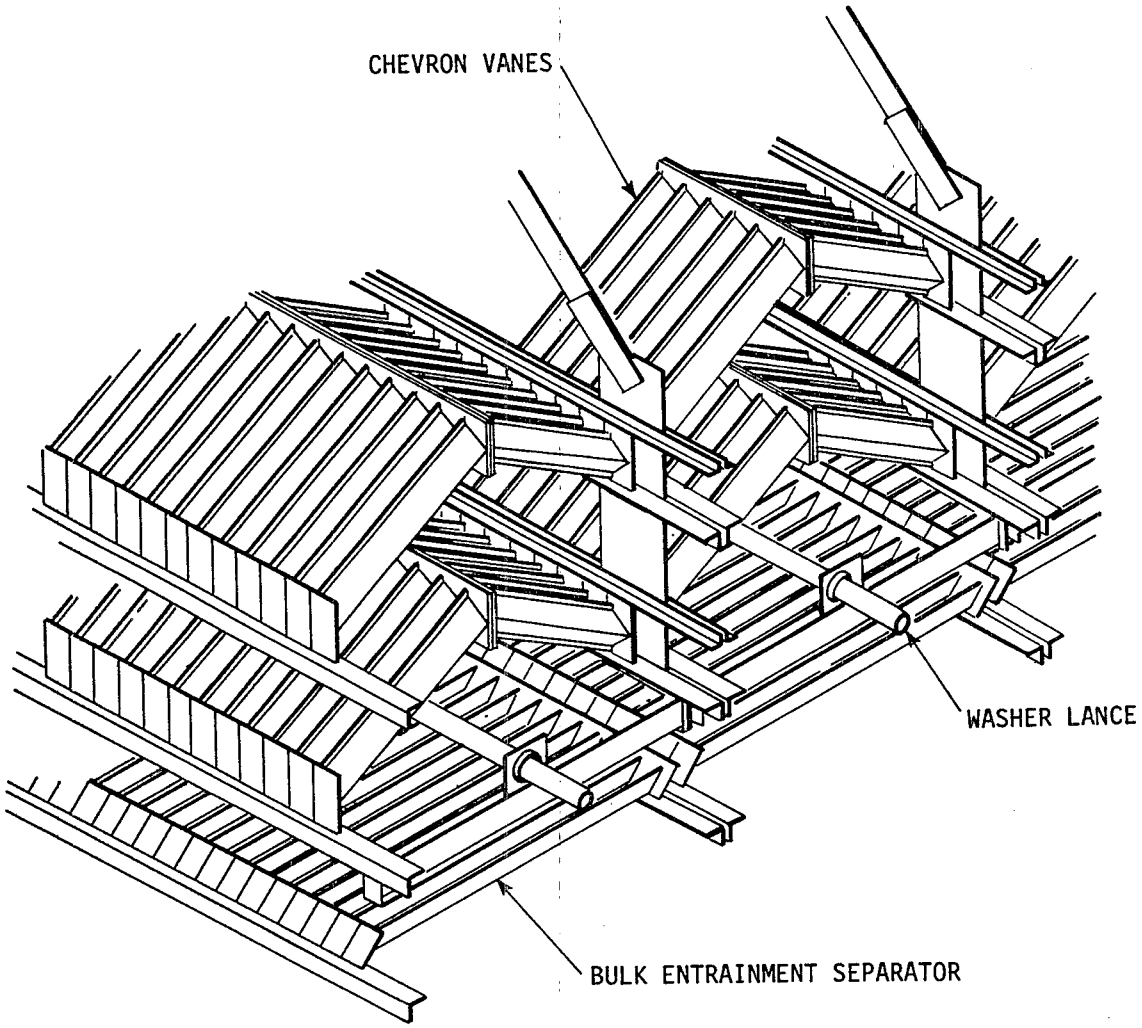

Figure 4.2-3. Typical mist eliminator section (baffle-type, continuous vane).

damaged need to be changed rather than the entire mist eliminator portion which could cover an area of approximately 400 sq. ft. The mist eliminator is typically accessed through access doors usually on the third or fourth level of the absorber. Table 4.2-4 presents a checklist for mist eliminators.

4.2.1.4 Reheaters. Indirect hot air reheaters which operate on ambient air are seldom responsible for system shutdowns. In-line reheaters, however, are troublesome equipment items. Although they require less energy to elevate the flue gas temperature above dew point (typically 125°F), they are subject to the hazards associated with the scrubbed gas environment. In-line reheaters are subject to corrosion from acid attack and solids accumulation resulting from carryover from inefficient mist eliminators and/or process chemistry problems. The impact this has on the reheater is a loss of heat exchange capacity and materials failure (e.g., steam tube failure). The impact on the FGD system may be an increase in ΔP, a loss of effective flue gas reheat, increased energy consumption, or possibly a complete unit shutdown. Reheaters are usually located above the mist eliminator section at the top of the absorber or in the exit duct just downstream of the absorber. In-line reheat systems are located in the ductwork at or near the top of the absorber (see Figure 2.4-8a), whereas indirect hot air reheat systems are located anywhere along the exit duct downstream of the absorber (see Figure 2.4-8b). Table 4.2-5 presents an inspection checklist for reheaters.

4.2.1.5 Ductwork and Dampers. Ductwork and dampers also account for a large proportion of FGD system outage hours (see Section 2.5.1, Table 2.5-3). The duct areas of greatest concern are at the scrubber/absorber inlet where the hot dry flue gas first encounters the slurry sprays. This area, called the wet/dry interface, is typically found near the bottom of the absorber just above the reaction tank. During the inspection, it would probably appear on the second story of the FGD system. The other

TABLE 4.2-4. MIST ELIMINATOR CHECKLIST

OBSERVATION

- Observe any discarded mist eliminator sections that may be nearby. Inspect for excessive plugging/scaling on vanes, breakage due to structural stress, or deformation due to high temperature excursions. (See Section 5.2.4.3 for significance.)
- If absorber is shut down, inspect mist eliminator sections for signs of plugging/scaling, breakage, deformation, and erosion/corrosion.
- If possible, inspect downstream equipment for signs of excessive mist eliminator carryover in the form of condensation packets and solids deposits.

PROCESS

- What is the design/actual ΔP? (See Section 5.2.2.2 for significance.) Note if it is low or high (if not sure of the acceptable ΔP range, ask operator or refer to Table 5.2-3).
- Ask if the absorber pH is operated above or below the design range. (See Section 5.2.2.3 for significance.)
- Inquire about the flue gas velocity. (See Section 5.2.2.1 for significance.) How does this compare with the design rate?

OPERATION AND MAINTENANCE

- Ask about mist eliminator automatic and manual washing techniques and practices.
- Check on wash water source (see Section 5.2.2.8 for significance.) Is it fresh makeup, process recycled water, or a blend? Does the plant water loop type (i.e., open or closed) have any impact on washing practices?
- If problems have occurred, inquire about remedial actions taken or planned.
- Inquire about routine maintenance procedures. How often are the mist eliminators inspected?

TABLE 4.2-5. REHEATER CHECKLIST

OBSERVATION

- If FGD system is shut down, inspect indirect reheater mixing chamber and/or in-line tubes for excessive scaling/plugging. Also check for signs of corrosion and note location.
- If reheater is operational, inspect external ductwork appearance upstream and downstream of reheater for signs of corrosion.
- Look for discarded or replacement tubes nearby (primarily for in-line reheater applications). Ask why the tubes were replaced.

PROCESS

- For in-line steam tube designs, note gas-side ΔP. A high ΔP could indicate plugged reheater tubes.
- What is the energy consumption of the reheater? (See Section 5.2.2.9 for significance.)
- What is the design/actual ΔT across the reheater? Is the outlet temperature above the acid dewpoint temperature to avoid corrosive attack?

OPERATION AND MAINTENANCE

- For in-line reheaters, inquire about incidence of tube failure. What types of tubes are used (plate, shell-and-tube, finned tubes)? What are they made of? Are they made of the same material as the baffles to avoid galvanic corrosion?
- For in-line steam tube reheaters, ask about plugging problems.
- If problems have occurred, inquire about remedial actions taken or planned.
- Ask about reheater cleaning techniques and frequency (e.g., soot blowers).
- Inquire about routine maintenance procedures. How often are the reheaters inspected?

duct areas of importance are the absorber outlet ductwork leading to the stack, particularly where the reheat gas encounters the wet scrubbed flue gas. Any wet gas ductwork requires special attention. All dampers need to be inspected, particularly the isolation dampers before and after the absorber sections. Again, only dampers seeing wet gas require special attention. As shown previously in Figure 2.4-9 of Section 2.4.2.5, dampers may appear in many places throughout the gas circuit. Expansion joints will also be found throughout the gas circuit ductwork. Expansion joint failures can result in leakage into or out of the FGD system (depending on whether the system is an induced or forced draft design). This, however, does not usually result in forced unit shutdowns. Table 4.2-6 provides an inspection checklist for ductwork/dampers.

4.2.2 Reagent Preparation and Feed

The inspection of the reagent preparation and feed equipment can be considered secondary to the gas handling circuit. The potential for reagent preparation and feed equipment failure resulting in downtime of FGD systems is not as great as compared to equipment comprising the gas-handling circuit. If, for example, a slaker or ball mill should fail, the FGD system could still operate for several hours drawing fresh slurry from the reagent preparation tank fed by the faulty component. There may be enough time to repair and put the faulty component back on line before the last batch supply is exhausted.

4.2.2.1 Reagent Conveyors and Storage. Reagent conveyors and storage facilities may be associated with chronic minor problems but they are seldom responsible for FGD system shutdowns. The operation of this equipment, however, has an impact on the FGD system as a whole and the attention it receives by the operating and maintenance staff will be somewhat representative of the utility's attitude toward the FGD system in general. Table 4.2-7 is an inspection checklist for reagent conveyors.

TABLE 4.2-6. DUCTWORK/DAMPER CHECKLIST

OBSERVATION

- Check for signs of corrosion. Note severity (e.g., discoloration, pitting, penetration) and size of area affected. Note the gas flow location of the ductwork/damper with respect to other equipment areas (e.g., mist eliminator, reheater, absorber).
- Observe duct expansion joints. (See Section 5.2.4.1 for significance.) Are there obvious ruptures where flue gas is leaking out (forced draft systems) or is ambient air being drawn into the duct (induced draft systems)?
- Observe any "new" ductwork. Ask the plant personnel the reasons for their replacement.
- Check for bypass ducting and verify if it is part of the original design (refer to Table 2.4-3a). If there is a contradiction, ask plant personnel the reasons for the change.
- Check to see if the duct runs are insulated on the outside to reduce the possibility of condensation/corrosion.
- Note ductwork shape (cylindrical versus rectangular) and configuration (straight runs versus elbows). (Stagnant/dead air spaces and sharp bends are vulnerable to erosion and the collection of condensation products. Rectangular ducts are more prone to non-uniform gas flow distribution, channeling and associated problems.)

PROCESS

- Ask what process conditions troublesome ducts and dampers are subject to. What is the gas flow and temperature? Is the gas saturated?
- What materials (if any) are used for duct lining?
- Is there a slurry carryover problem through the mist eliminators?

(continued)

TABLE 4.2-6 (continued)

OPERATION AND MAINTENANCE
° Inquire about problems with ductwork.
° Inquire about problems with dampers. Do the dampers function properly - do isolation dampers effectively isolate a module so that workers can enter the module while other modules are in service? Are there problems due to fly ash or other solids accumulation which hinder the opening/closing of the damper? Are dampers equipped with seal air to aid isolation/operation?
° Inquire about integrity and installation of duct materials. Ask where problems have occurred and what actions are being taken to rectify problems.
° Are there problems due to fly ash or other solids accumulation which hinder the opening/closing of the damper?
° Inquire about routine maintenance procedures. How often are the ductwork/dampers inspected?

TABLE 4.2-7. REAGENT CONVEYOR CHECKLIST

OBSERVATION

- Check for belt misalignment, tears, or frayed edges (if belt conveyor is used).
- If pneumatic, check for leaks near elbows or bends due to erosion caused by the reagent.
- If bucket elevator is used, look for discarded chain sections and/or buckets, welding equipment, and signs of "jury rigging" Look for areas where track/chain jamming may have occurred.
- Inquire about the duty of the conveyors (i.e., separate for reagent and coal, or shared). If shared, has this ever caused any contamination problems?

OPERATION AND MAINTENANCE

- Inquire about problems experienced with the conveying device.
- Are there problems reported with respect to lime/limestone quality (e.g., debris shipped to the site in the reagent) or freeze ups during the winter months?
- If problems have occurred, inquire about remedial actions taken or planned.
- Inquire about routine maintenance procedures.

4.2.2.2 Ball Mills. Ball mills (see Figure 2.4-13) are generally located at ground level along the perimeter of the FGD system building adjacent to the limestone conveying equipment. Their size depends upon 1) the size of the FGD system, 2) the number of ball mills, 3) the design limestone quality, and 4) the coal sulfur content. Ball mills are problem areas for utilities; however, the potential for failure resulting in downtime in the FGD system is not as great as compared to other equipment areas. Ball mills require a good deal of operator and maintenance crew attention and repairs can be expensive. Table 4.2-8 shows an inspection checklist for ball mills.

4.2.2.3 Slakers. Slakers (see Figure 2.4-14), like ball mills, are found at ground level along the perimeter of the FGD system main building or in a separate building nearby. The size of a given slaker depends upon 1) the size of the FGD system, 2) the number of slakers, 3) the lime quality, and 4) the coal sulfur content. Slakers are areas of concern for utilities but they are usually not critical to the continuous operation of the FGD systems. Table 4.2-9 shows a slaker inspection checklist.

4.2.2.4 Tanks. Tanks are seldom responsible for unit outages. They are, however, significant sources of module downtime. Problems encountered with tanks depend upon the tank service. Tanks handling slurry are prone to abrasion, corrosion, plugging, agitator failure, and liner failures. Table 4.2-10 is a tank inspection checklist.

4.2.3 Waste Solids Handling and Disposal

The waste solids handling and disposal area is somewhat less critical to the operation of the FGD system than the reagent preparation and feed circuit. When problems occur they can often be rectified without the need for a forced outage, or at least temporarily "bandaged" until the next scheduled plant outage.

4.2.3.1 Thickeners. With respect to operation, thickeners can be regarded as mechanically-aided settling tanks. When properly

TABLE 4.2-8. BALL MILL CHECKLIST

OBSERVATION

- Look for any discarded balls. Inquire about the reason for their replacement. (New ball charges are expected requirements because the action of milling "consumes" the balls and eventually requires replacement to maintain desired particle size.)

PROCESS

- Inquire about problems that have resulted due to the quality of the delivered reagent (refer to "Reagent Preparation" in Section 5.3.1.2 for significance). Poor grade reagent (e.g., problems with purity, hardness, or chemical composition) can reduce the design output of a ball mill. Was the ball mill properly sized for the facility?

- Inquire about the source/quality of water used in the ball mill. (Water having high levels of dissolved chemicals may inhibit dissolution.)

OPERATION AND MAINTENANCE

- Inquire about problems that have occurred (e.g., liner failure, rapid ball loss, poor quality product, motor failure, bearing failure).

- If any problems have occurred, inquire about remedial actions taken or planned.

- Ask about routine maintenance procedures on mills.

TABLE 4.2-9. SLAKER CHECKLIST

OBSERVATION

- Observe whether the slaker is operational. If not, inquire why.
- Is the slaking equipment properly sized for the facility? What is the dry reagent feed rate? How does this compare with the design level and the current demands of the FGD system?
- Inquire about problems that have resulted due to poor quality of the delivered reagent. (Poor grade reagent [e.g., problems with purity or chemical composition] can reduce the design output of the slaker.)
- Inquire about the source/quality of water used in the slaker. (Water having high levels of dissolved chemicals may inhibit reagent dissolution.)

OPERATION AND MAINTENANCE

- Ask about problems associated with slaking equipment.
- If any problems have occurred, inquire about remedial actions taken or planned.
- Ask about routine maintenance procedures on the slakers.

TABLE 4.2-10. TANK CHECKLIST

OBSERVATION

- Are there signs of tank repairs (e.g., patches welded on outside)? Inquire why the repairs were made.
- Note tank configuration (cylindrical versus rectangular). Rectangular tanks are more prone to corrosion due to stagnant areas. Rectangular tanks are also more prone to insufficient mixing and short circuiting; check placement of internal baffles to aid in mixing.
- Inquire or note if tanks are open or closed. If open, has it ever resulted in any problem?
- Look for signs of slurry leakage due to erosion/corrosion.
- Check for floating debris in open tanks (e.g., absorber packing, liners). Inquire about the origin of the foreign material. Are the tanks equipped with strainers and have they ever become plugged?

OPERATION AND MAINTENANCE

- Ask about liner and baffle failures. Have any tanks had to be taken out of service and drained in order to make repairs? What caused the failure?
- Inquire about problems associated with support equipment (e.g., agitators, pumps, instrumentation).
- If problems have occurred, inquire about the remedial actions taken or planned.
- Inquire about routine maintenance procedures.

operated and maintained, thickeners generally perform well. However, if thickener problems occur, complete unit shutdowns may occur because there is no way to bypass the thickener. Thickener failures are primarily design-related (e.g., shaft failures, lining failures). Figure 4.2-4 shows an isometric view of a typical thickener. Table 4.2-11 is an inspection checklist for the thickeners.

4.2.3.2 Vacuum Filters. Vacuum filters (see Figure 2.4-16) are generally located at ground level in the main FGD system building adjacent to the holding area for the filter cake material. Vacuum filters are not generally responsible for unit shutdown because spares are usually provided. Table 4.2-12 provides an inspection checklist.

4.2.3.3 Centrifuges. Centrifuges (see Figure 2.4-17) seldom cause unit outage because of their batch-type operation and because spares are generally provided. An FGD system usually has enough tank surge capacity to continue to operate for several hours, during which time repairs could be made. If more time was required (and no spares were available), the boiler load could be cut back to slow the rate of waste slurry accumulation in the holding tank. Table 4.2-13 provides a centrifuge inspection checklist.

4.2.3.4 Waste Processing. Except for the forced oxidation waste processing alternative, this equipment area has little impact on the FGD system itself. The waste processing system can, however, have an impact on the FGD system when failures cause back-ups beyond the storage capacity of the waste slurry holding tanks. Table 4.2-14 provides a waste processing system checklist.

4.2.3.5 Waste Disposal. The inspector should be aware of the area of waste disposal; however, it has little effect on the FGD system itself. Examples of typical pond types used for handling waste from a lime/limestone slurry FGD system were shown

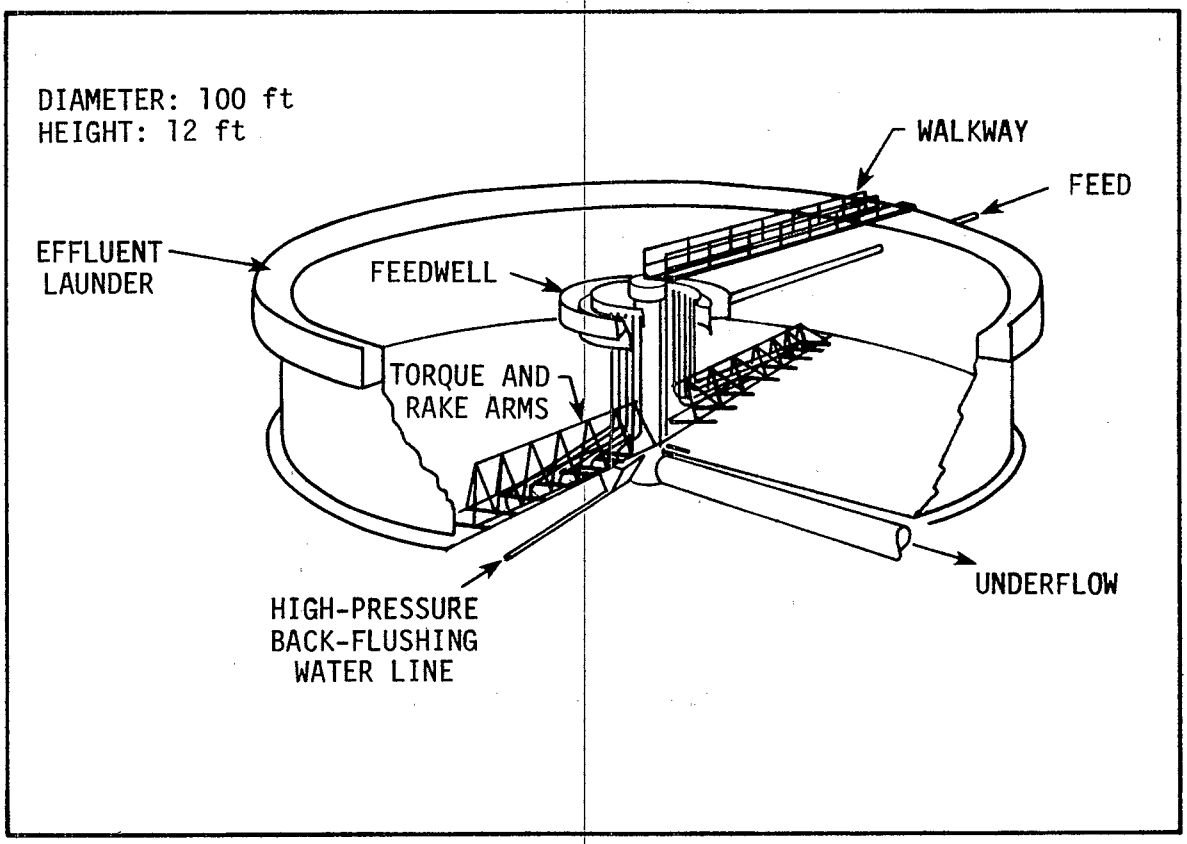

Figure 4.2-4. Isometric view of a typical thickener.

TABLE 4.2-11. THICKENER CHECKLIST

OBSERVATION

- Are there signs of repairs to the tank portion of the thickener (e.g., patches welded on the outside)? Inquire why the repairs were made.
- Look for signs of slurry leakage due to erosion/corrosion.
- Does the thickener have a protective covering (e.g., screen)? If not, look for floating debris.

PROCESS

- How is water recycled back to the system (gpm) and how is it used? (See Section 5.2.2.8 for significance.)
- What is the actual/design percent solids the thickener produces at the underflow? Overflow? (See Section 5.2.2.5 for significance.)
- What is the thickener actual/design solid waste production rate? (See Section 5.2.2.7 for significance.)
- What is the approximate ratio of calcium sulfite to sulfate of the inlet waste to the thickener? (See Sections 2.3.2.5 and 5.2.2.7 for significance.)

OPERATION AND MAINTENANCE

- For equipment protection purposes, is the thickener rake drive shaft and motor equipped with a torque control/alarm system? If not, how is it monitored?
- Have there been problems reported with rake binding or rake drive shaft/motor failure?
- Have there been sump pump failures?
- Have there been liner failures?
- If problems have occurred, inquire about remedial actions taken or planned.
- Inquire about routine maintenance procedures. How often inspected?

TABLE 4.2-12. VACUUM FILTER CHECKLIST

OBSERVATION

- Inspect filter cloth for tears.
- Observe surroundings for spare or discarded filter cloths.
- Observe filter cake consistency. Does the material fall from the filter cloth upon hitting the blade in dry cake-like chunks or does it stick and fall to the conveyor in a damp gum-like mass?

PROCESS

- What is the actual/design percent solids in the filter cake produced by the vacuum filter? (See Section 5.2.2.5 for significance.) Is the inlet solids content high enough to allow adequate filter cake formation?
- What are the design/actual solid waste and wastewater effluent production rates of each vacuum filter? (See Section 5.2.2.7 for significance.)
- How much vacuum filter filtrate is recycled back to the system (gpm) and how is it used? (See Section 5.2.2.8 for significance.)
- What is the approximate ratio of calcium sulfite to sulfate of the filter cake? (See Sections 2.3.2.5 and 5.2.2.7 for significance.)

OPERATION AND MAINTENANCE

- Have there been any filtrate or vacuum pump failures?
- Have there been problems with filter cloth replacement?
- Have there been any problems due to filter cake conveyors?
- If any problems have occurred, inquire about remedial actions taken or planned.
- Inquire about routine maintenance procedures.

TABLE 4.2-13. CENTRIFUGE CHECKLIST

OBSERVATION

- Are any centrifuges operational? If not, is it the result of a forced outage or normal maintenance?
- Observe the filter cake consistency. Does the material empty from the centrifuge in dry cake-like chunks or does it stick to the conveyor in a damp gum-like mass?

PROCESS

- What is the actual/design percent solids in the filter cake produced by the centrifuge? (See Section 5.2.2.5 for significance.) Does it yield a quality product consistently? Is the inlet solids content high enough to allow adequate filter cake formation?
- What are the design/actual solid waste and wastewater effluent production rates of each centrifuge? (See Section 5.2.2.7 for significance.)
- How much centrifuge filtrate is recycled back to the system (gpm) and how is it used? (See Section 5.2.2.8 for significance.)
- What is the approximate ratio of calcium sulfite to sulfate in the end product? (See Sections 2.3.2.5 and 5.2.2.7 for significance.)

OPERATION AND MAINTENANCE

- Ask the utility contact about problems associated with the centrifuge and related equipment.
- If any problems have occurred, inquire about remedial actions taken or planned.
- Inquire about routine maintenance procedures.

TABLE 4.2-14. WASTE PROCESSING SYSTEM CHECKLIST

PROCESS

- What type of waste processing technique is used at this facility? (See Section 2.4.2.13.)
  - Forced oxidation
  - Fixation
  - Stabilization
  - Untreated
- What is the energy consumption of the waste processing system?

OPERATION AND MAINTENANCE

- Ask utility contact about problems associated with this equipment area.
- If any problems have occurred, inquire about remedial actions taken or planned.
- Inquire about routine maintenance procedures.

previously in Figure 2.4-18. Table 4.2-15 provides a waste disposal system checklist.

4.2.3.6 Pumps and Valves. Figure 4.2-5 shows a typical slurry recycle centrifugal pump used in an FGD system. Pumps of greatest concern with respect to operation and maintenance are slurry recycle pumps. Valves are generally not major failure related items. Table 4.2-16 provides a pump and valve checklist for the inspection. Pumps are major areas of concern because of their very high maintenance requirements. Most utilities accept impeller and liner failures as normal to operations. Utilities track the expected life of each major pump, and schedule complete overhauls around the time failures are projected. In addition, particularly in newer systems, a good deal of pump redundancy is included in the overall FGD system design to minimize the impact of failures. It is important for the inspector to be aware of signs of excessive pump failure. Excessive failures in this area could give clues to problems in other parts of the FGD system. An example of this might be corroded pump impellers due to lowered slurry pH.

4.3 SUMMARY

To simplify the inspector's data collection process, the individual checklists presented earlier have been abbreviated and assembled into a single inspection worksheet titled "FGD System Inspection Checklist", and presented in Appendix C. Copies of the inspection worksheet should be made prior to each plant inspection.

As mentioned in the beginning of this section, the actual layout of the FGD system may differ greatly from one plant to the next. In addition, an inspector is likely to encounter items pertaining to one area while inspecting another, e.g., pallets of new mist eliminator sections could be stacked outside the FGD system main building, near the reagent handling area, or adjacent to the waste processing area. Also, a typical FGD system may be

TABLE 4.2-15. WASTE DISPOSAL SYSTEM CHECKLIST

PROCESS

- Is the FGD system water loop open or closed? (See Section 5.2.2.8 for significance.)
- What type of waste disposal system is used at this facility? (See Section 2.4.2.14.)
  - Ponding
  - Landfilling
  - Stacking
- If a pond is used, is wastewater circulated back to the process? How much? What are the waste characteristics (solids content, pH, chlorine content, other salts content)? (See Section 5.2.2.8 for significance.)

OPERATION AND MAINTENANCE

- What problems have been reported with respect to this area? If any problems have occurred, inquire about remedial actions taken or planned.
- Inquire about routine maintenance procedures.

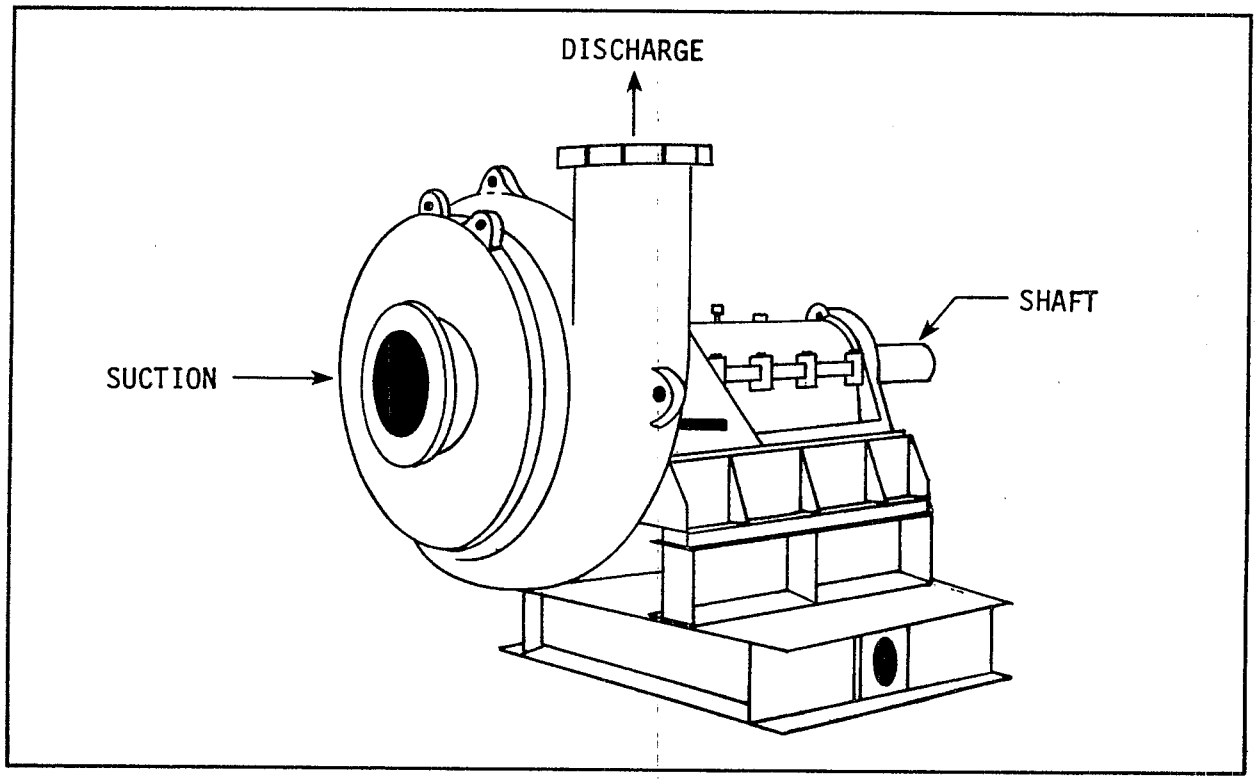

(a)

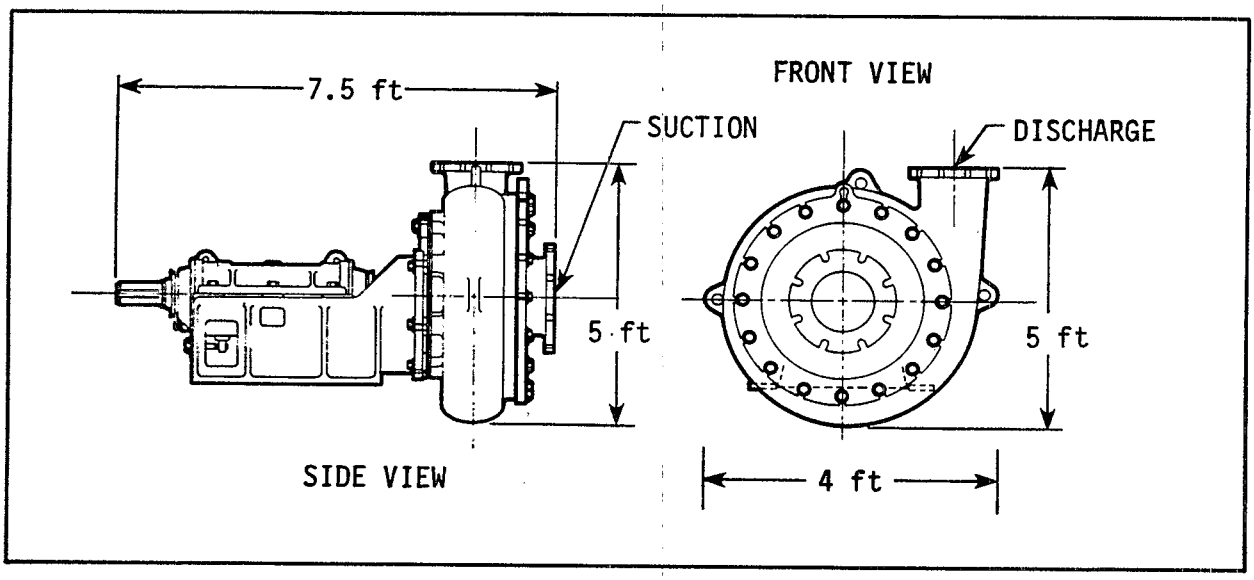

(b)

Figure 4.2-5. Typical slurry recycle centrifugal pump: (a) isometric view; (b) side and front view with approximate dimensions.

TABLE 4.2-16. PUMP AND VALVE CHECKLIST

OBSERVATION

- Observe any discarded pump impellers or pump liners in the area around each pump. (See Section 5.2.4.3 for significance.) Inspect for excessive erosion/corrosion.
- Are there any leaks around the pump seals, pump bearings, or other areas?
- Check for excessive pump vibration (if it is questionable as to whether the vibration is normal or not, ask the operator or primary utility contact).
- Look for abrupt expansion, contraction, and bends in piping located at the inlet/outlet of valves that could lead to solids accumulation and valve malfunction.

PROCESS

- Inquire about process conditions that failure-prone pumps/valves are subject to. How does this compare to the design duty in each case?
- How does the actual energy consumption of the absorber recycle pumps compare with the design value? (See Section 5.2.2.9 for significance.)
- Ask about pump redundancy provided.

OPERATION AND MAINTENANCE

- Ask the operator if there have been problems with plugging, cavitation, or shaft, impeller or liner failure. If problems have occurred, inquire about remedial actions taken or planned. Identify specific pumps in question and record details.
- Inquire about the types of valves and location where failures have occurred. What remedial action has the utility prescribed?
- Inquire about routine pump/valve maintenance procedures.

several stories high. It may be more convenient for the inspector to inspect equipment items level by level rather than by equipment area. In such a case, the inspector would look at the equipment observable at each level.

As stated earlier in Section 4.1, the general plant data portion of the FGD system inspection checklist should be completed prior to the inspection because it can provide valuable input for evaluating the FGD system performance, diagnosing problems, and recommending corrective measures.

SECTION 5
PERFORMANCE EVALUATION AND PROBLEM DIAGNOSIS/CORRECTION

This section describes guidelines that can be used by the field inspector to interpret FGD system performance data with respect to present and future compliance status. The guidelines presented are independent in that they are designed to assist the field inspector irrespective of performance interpretation or biasing by the plant operator. The guidelines presented are designed to be used in both immediate and long-term performance evaluations. The latter consideration is important in that an FGD system may yield performance data indicating compliance at the time of the inspection; however, process data may indicate the existence of problems which will jeopardize future compliance status.

This section represents a continuation of Section 3, wherein we describe lime/limestone slurry FGD performance indicators and their measurement, and Section 4, wherein we describe lime/limestone slurry FGD inspection methods and procedures. We describe in this section both the sources of data available to the field inspector as well as the form these sources of data take. We describe techniques that are available to aid the field inspector in performance evaluation. We identify cause-and-effect problem relationships and corrective measures through simplified sequence diagrams. We present followup procedures to verify the success of the corrective measures taken.

The information presented in this section is organized in accordance with the equipment areas and subsystems identified in Section 2.4.2 (FGD System Design Configurations).

5.1 DATA COLLECTION METHODS

The following two sections give a brief description of sources of performance data and modes by which these data are available to the field inspector.

5.1.1 Sources

Sources of information available to the field inspector during the plant inspection include performance data, process data, operation and maintenance data, and observational data.

FGD system performance data includes any information concerning SO_2 removal, particulate removal, and opacity levels. As mentioned in Section 3.4, most operator utilities collect SO_2, particulate, and opacity data continually using CEM's in the form of strip charts, computer disk, and/or tape files. Other sources of performance data include stack test results for compliance testing, acceptance testing, certification of the CEM's, and/or smoke stack readings by a trained observer for opacity compliance.

Process data includes any information concerning the various physical operating parameters of the FGD system. These parameters include gas flow, gas-side pressure drop, slurry pH, slurry flow, slurry solids, reagent consumption, solid waste production, wastewater discharge, makeup water consumption, and energy consumption (see Section 5.2.2). Most operator utilities record this type of data hourly on operation log sheets. If not, the field inspector, with the aid of the operator, can obtain most of these measurements directly from the control panel. Certain other parameters, such as slurry pH and slurry solids, are also measured manually with grab samples to check automatic instrumentation readings. On request, the field inspector should also have easy access to these recorded data. However, other parameters such as makeup water consumption and equipment energy consumption might not be measured directly; they can be obtained directly from the operating staff.

Operation and maintenance data include any information which is manually recorded in the form of operation log books, maintenance log books, work orders, maintenance requests, and equipment purchase orders. A detailed description of these types of data is presented in Section 5.2.3.

The last and most important source of data is observational data and information obtained firsthand by the field inspector. The field inspector should try to ask questions concerning system O&M as well as take notes (and/or photographs) on equipment layout, visual appearance of equipment, general housekeeping, and any consumed equipment or parts observed during the inspection (see Section 5.2.4). In some cases, recorded data will not be available and the field inspector will have to take readings directly from the control panel(s) or orally from the operating staff. All of these data and information will be of use when the field inspection is completed and the inspector has returned to the office for data assimilation and analysis.

5.1.2 Forms of Data

The forms of data and information available to the field inspector are mentioned in Section 5.1.1. These include computer output, control room panels, O&M records, other written documents, and observational data and information. Most CEM's have a means for viewing or printing on-line results of SO_2, particulate, opacity emission, and NO_x measurements in a variety of units (ppm, $lb/10^6$ Btu). Regarding control panels, the field inspector should be aware that FGD control panels may be decentralized (i.e., at more than one location in the plant) versus a central location such as the boiler control room. Reagent preparation and feed, gas handling and treatment, and waste solids handling and disposal instruments might be located on separate panels at different locations in the plant. Written records available to the field inspector include O&M log books, work orders, stack test reports, purchase orders, lab reports, and any other written

documentation concerning the operation and performance of the FGD system. The final and most important means for gathering data and information is the recording by the field inspector during the plant inspection.

5.2 PERFORMANCE EVALUATION

This section provides the field inspector with independent guidelines on how to collect and interpret performance data during a plant inspection. These guidelines are organized according to emissions (Section 5.2.1), process (Section 5.2.2), O&M (Section 5.2.3), and observation (Section 5.2.4). These sections emphasize collection techniques and performance interpretation. To the extent possible, the interpretation guidelines exclude any discussion of problem diagnosis and corrective actions; these are taken up in Sections 5.3.1 and 5.3.2, respectively.

5.2.1 Emissions

The following discussion on emissions addresses SO_2, particulate matter, and opacity. The discussion on particulate matter and opacity is presented in terms of FGD performance. Section 3.1.1 introduces the gas stream measurement parameters and the associated monitoring techniques used by the operator utility to collect these data.

5.2.1.1 SO_2. Inlet SO_2 concentration is largely dependent on the sulfur content of the coal fired in the boiler (see Section 2.2, Coal Properties and Flue Gas Characteristics). To estimate SO_2 emissions (in units of lb $SO_2/10^6$ Btu), the field inspector should refer to Figure 2.1-1 or use the following equation:

SO_2 emission rate = (% sulfur in coal by weight) x (2×10^4) x (fractional conversion of sulfur in coal to SO_2)/(heating value of coal in Btu/lb).

EXAMPLE:

SO_2 emission rate = (3.5% S) x (2×10^4) x (0.92 conversion)/(11,000Btu/lb) = 5.85 lb $SO_2/10^6$ Btu.

(If the conversion of sulfur to SO_2 is unknown, use EPA AP-42 emission factors that assign SO_2 conversion factors as follows: 0.97 for bituminous coal, 0.88 for subbituminous coal, and 0.75 for lignite.[12])

Sulfur is present in the coal in three forms: organic, pyritic (primarily FeS_2), and inorganic sulfates. The organic sulfur is liberated when the coal is burned; however, not all the inorganic sulfates and pyritic sulfur is liberated during combustion. Some of it is converted to bottom ash or fly ash. The coal should be tested to determine what fraction of the organic and inorganic sulfur is converted to SO_2. Typically, 95 percent of the sulfur in coal is converted to SO_2; about 0.5 to 1.0 percent may be converted to sulfur trioxide (SO_3); and the remainder is trapped in the bottom ash or fly ash. The SO_3 is converted to sulfuric acid mist during the absorption process. Due to the fineness of its particle size, very little is removed by the FGD system.

An increase in inlet SO_2 concentration due to a change in coal sulfur content may lead to several operating consequences including increased reagent consumption, increased solid waste production, and lowered slurry pH (i.e., SO_2 loading exceeds design) with increased potential for gypsum scale formation and corrosion in the absorber (see Section 5.3.1.1, Absorber).

5.2.1.2 Particulate Matter. Particulate matter consists primarily of finely divided solid particles entrained in the flue gas stream. The particles can be either fly ash, uncombusted coal fines, or SO_2 reactants/products.

Increases in coal fines and fly ash in the flue gas can contribute to plugging in the absorber. Added levels of fly ash and coal fines can also increase solid waste production. If not accounted for in the design of the FGD system, the alkalinity of the collected fly ash from its available calcium oxide (CaO) and magnesium oxide (MgO) constituents can result in high pH levels and unreacted reagent. This in turn may increase the potential

for scale formation, plugging, and unnecessarily high solid waste production. If the fly ash has a low alkalinity value (or, conversely, high acidity value), it can have the opposite effect. The fly ash (and coal fines) can dilute the slurry solids level of the chemical reactants, thereby lowering the SO_2 removal efficiency and pH of the system. This in turn can promote gypsum scale formation. Increased amounts of fly ash and coal fines, in addition to absorber-generated particulate matter, can also lead to opacity problems.

Decreases in particulate removal efficiencies can be attributed to a number of factors including mechanical problems, poor maintenance, and changes in coal characteristics. For example, a change in coal sulfur content from 2.5 to 1.0 percent can reduce the ESP particulate removal efficiency from 98 to 90 percent due to changes in particle resistivity. If the particulate matter removal device is not working properly, the carryover of the solids to the FGD system might lead to the adverse consequences indicated in the foregoing paragraphs.

Increased particulate matter loading due to higher ash content in the coal can overload particulate matter removal devices and subsequently increase opacity levels. Ash content of coal ranges from less than 3.5 to more than 15 percent. A portion of the ash leaves the boiler with the flue gas as fly ash, and the remainder leaves the boiler as bottom ash. The split of fly ash to bottom ash depends on coal grade and characteristics and boiler firing configuration. For any application, an accurate determination can only be made empirically. However, for field inspections, a number of quick-estimating techniques are available. For pulverized coal boilers, the split of fly ash to bottom ash is 80:20. For cyclone-fired boilers, the split is 30:70 (almost a complete reversal of pulverized coal).

5.2.1.3 Opacity. Opacity is the degree to which particulate emissions in the plume leaving the FGD stack reduce the transmission of light and obscure the vision of objects in the background.

Increases in opacity levels are usually the result of decreased particulate matter removal, an increase in particulate matter loading (i.e., higher ash content in coal), or the generation of FGD particulate matter.

A decrease in particulate matter control efficiency can easily contribute to higher opacity levels. In some cases, FGD-generated particulate matter contributes to the opacity level. There are several mechanisms which account for this. For example, prior to contacting the slurry, quenching or presaturation may be used to reduce the flue gas temperature. The water used in this spray may contain significant quantities of suspended solids or dissolved salts which can form a solid aerosol on evaporation. If the aerosol is small enough, it could then penetrate the absorber and become part of the overall emissions from the FGD system. Another example is the slurry from the absorber. The mechanical equipment required to pump and spray the slurry also generates liquid and solid aerosols. These aerosols could be entrained by the gas stream and pass through the mist eliminator to the stack. Additionally, certain species such as sulfuric acid or volatile elements may be present as vapors in the flue gas. As the gas temperature is reduced during passage through the absorber, these species may condense. The small particle aerosols may pass through the absorber to the stack.

5.2.2 Process

The following discussion on process addresses the operating parameters of gas flow and pressure drop; slurry pH, flow, and solids; reagent, solid waste, and makeup water consumption; and wastewater effluent and energy consumption. Section 3.1 (Key Operating Parameters and their Measurement) provides background information on these measurement parameters and monitoring techniques.

5.2.2.1 Gas Flow. The gas flow rate to the FGD system is primarily a function of boiler load. Variance from design caused by sudden changes in boiler load, leaks in ducts and expansion joints, or the malfunction of the control dampers can lead to several operating consequences. Gas flow rates above the design value can have several consequences, including the reduction of SO_2 removal. Another result of high gas flow rate is the carry-over of entrainment from the mist eliminator to the downstream subsystem. Higher-than-normal gas flow rates can result in increased particulate loadings from upstream particulate collection devices (e.g., ESP's, scrubbers). The added particulate matter can also increase solid waste disposal. Reduced gas flow may decrease SO_2 removal efficiency, depending on the design and operating characteristics of the absorber.

5.2.2.2 Gas-side Pressure Drop. Gas-side pressure drop consists of losses in the bends, contractions, and expansions in the inlet and outlet ductwork, pre-scrubber (if present), absorber, mist eliminator, reheater (if present), and stack. Emphasis is placed here on the absorber and mist eliminator because they constitute the major portion of the total pressure drop. The pressure drop across the absorber and mist eliminator is a function of flue gas velocity and design. For reference, reported design pressure drops for specific types of absorbers and mist eliminators used in commercial lime/limestone slurry FGD systems are summarized in Tables 5.2-1 and 5.2-2, respectively.

An increase in pressure drop across the absorber and mist eliminator can cause an increase in system energy consumption due to increased energy demand by the unit or booster fans. An increase in pressure drop across the absorber/mist eliminator is commonly attributed to either plugging or scaling. Other contributing factors include high gas flow rates and high slurry flow rates (which compresses the gas flow).

TABLE 5.2-1. DESIGN GAS-SIDE PRESSURE DROPS FOR ABSORBERS IN OPERATIONAL LIME/LIMESTONE FGD SYSTEMS

Absorber type	Number of plants	Gas-side pressure drop, in. H_2O	
		Range	Average
Venturi			
Fixed-throat	2	6	6
Variable-throat/side movable blades	1	8	8
Variable-throat/top-entry plumb bob	1	8	8
Packed			
Entrained	3	3-6	5
Grid	1	2	2
Mobile bed	5	2-9	6
Rod deck	3	8-12	9
Static bed	1	11	11
Tray			
Sieve	7	2-14	6
Combination			
Spray/packed	8	1-6	3
Spray			
Open/countercurrent spray	24	1-8	3
Open/crosscurrent spray	4	2	2

TABLE 5.2-2. DESIGN GAS-SIDE PRESSURE DROPS FOR MIST ELIMINATORS IN OPERATIONAL LIME/LIMESTONE FGD SYSTEMS

Mist eliminator type	Number of plants	Gas-side pressure drop, in. H_2O	
		Range	Average
Primary collectors			
Impingement			
Baffle/closed vane	56	0.1-4.0	1.0
Baffle/open vane	2	0.2-0.8	0.5
Centrifugal separation			
Radial vane	1	2.3	2.3
Precollectors			
Bulk separation			
Perforated trays	2	0.5	0.5

A decrease in pressure drop, although not as common, can cause improper slurry atomization and distribution in the absorber. A decrease in pressure drop can be attributed to dislocated packing, low slurry flow rates, or low gas flow rates.

5.2.2.3 Slurry pH. Control of slurry pH is essential to reliable FGD system performance. Removal of SO_2 from the flue gas takes place in the absorber, and neutralization and precipitation reactions occur in the slurry recirculation and holdup tanks. The pH of the recirculation slurry entering the absorber should be in the range of 8.0 to 8.5 for lime slurry and 5.5 to 6.0 for limestone slurry. The pH of the spent slurry leaving the absorber should be in the range of 6.0 to 6.5 and 4.5 to 5.0 for lime and limestone slurry, respectively. Slurry pH is controlled by adjusting reagent feed rate. However, slurry pH can also be affected indirectly by slurry feed rate and the quantity and characteristics of flue gas being treated. Operation at high pH levels, which tends to increase SO_2 removal efficiency, can lead to soft scale formation, lowered reagent utilization, and increased solid waste volume. Operation at low pH levels, which tends to improve reagent utilization and lower the amount of solid waste production, will also lower SO_2 removal efficiency and promote gypsum formation.

5.2.2.4 Slurry Flow. The field inspector should obtain readings from all instruments used to measure the flow of the different process streams (see Section 3.2.2). Pump discharge pressure is commonly used to determine slurry flow characteristics. Flow in noninsulated slurry piping can be checked by touching the pipe (warm and/or vibrating, the pipe is operational; cool and/or quiescent, the pipe is inoperative). Deviations from anticipated values can indicate potential problems, either in the absorber or with the instrumentation.

The rate of slurry flow (feed) to the absorber is determined primarily by the design L/G ratio. An increase in slurry flow

rate above the design L/G may improve SO_2 removal; however, high slurry flow rates mean high pumping costs, increased reagent usage, lower reagent utilization, and greater solid waste production. High flow rates also promote the erosion of piping, pumps impellers, absorber linings, spray headers and nozzle orifices, and valves. High slurry flow rates can also lead to slurry carryover from the mist eliminators. A decrease in slurry flow below the design L/G is usually an indication of plugging, which is detectable by either an increase in recycle pump discharge pressure or absorber slurry recycle piping that is cold to the touch (normal operating temperatures are 125° to 130°F). By decreasing the recirculation slurry flow rate, SO_2 removal efficiency will be lowered. As slurry flow is drastically reduced or stopped, pump cavitation may occur. Moreover, pump liners can be sucked into the path of impellers and shreaded which may become additional material to reduce flow rate by plugging downstream slurry handling equipment.

5.2.2.5 Slurry Solids. Operation at a consistent solids content in the various slurry process streams can improve the reliability of the absorber and slurry handling equipment and improve process control. Specific gravity is a commonly used measure for determining slurry solids content (see Section 3.2.3). The design specific gravity of the recirculating slurry for lime/limestone FGD systems is usually between 1.05 and 1.14 (approximately 7 to 20% solids). A graphic representation of specific gravity as a function of the solids content of the slurry in lime/limestone FGD systems is presented in Figure 5.2-1.

5.2.2.6 Reagent Consumption. Reagent consumption is set by stoichiometry of the process. As noted in Section 2.3.2.1, it is necessary to feed more than the stoichiometric amount of reagent in order to attain the degree of SO_2 removal required (stoichiometric ratio). However, excessive reagent can lead to several operating problems including wasted reagent, scale formation, and

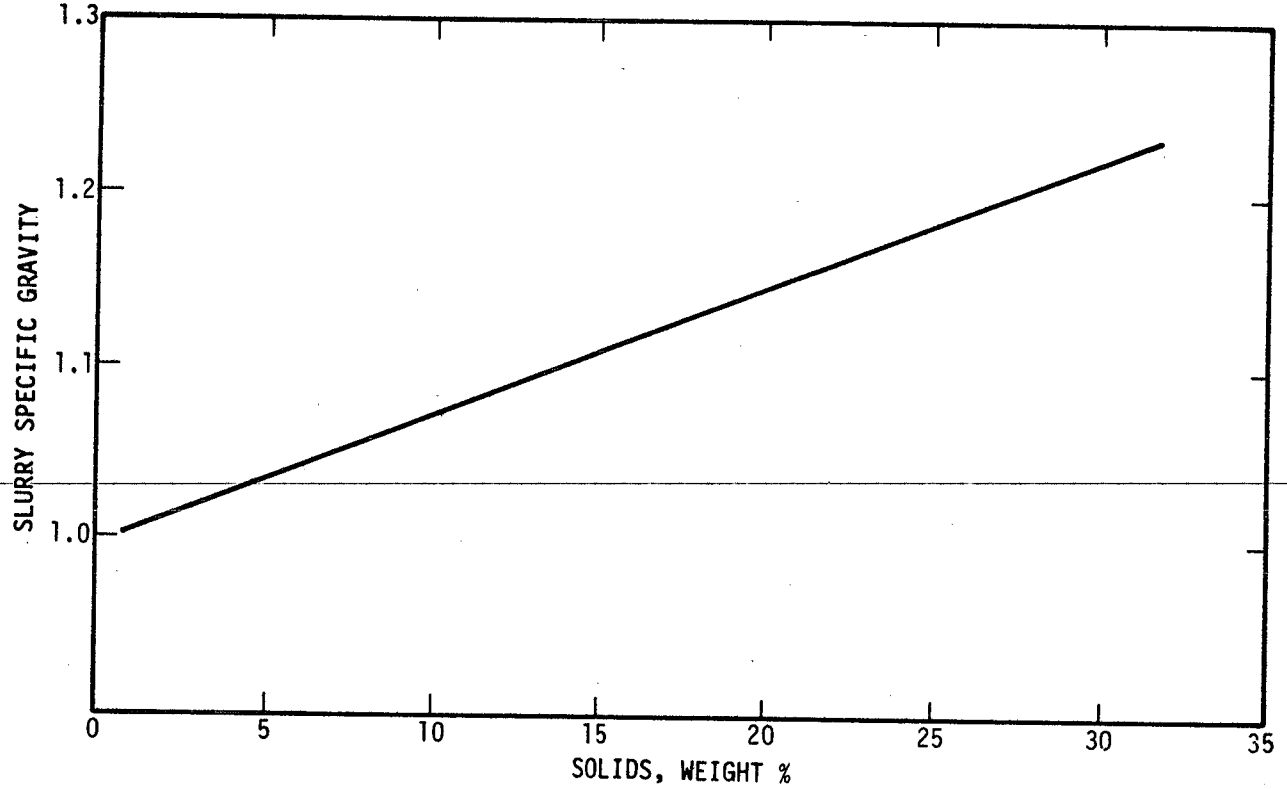

Figure 5.2-1. Typical specific gravity of absorber recirculation slurry for lime/limestone FGD system.

erosion of slurry-handling equipment. Figure 5.2-2 is a graphic representation of reagent consumption as a function of the SO_2 emission limitation and boiler size (i.e., equivalent FGD capacity in MW). This figure can be used by the field inspector to estimate reagent feed rates.

5.2.2.7 Solid Waste Production. Solid waste (sludge) production will vary as a function of the inlet flue gas characteristics and FGD system design and operating characteristics. The constituents usually include solid phase SO_2 reaction products, unreacted reagent, fly ash, and adherent liquor.

Increases in solid waste increase the burden on solids handling and disposal. This can mean higher energy consumption, possible deviation from closed water loop operation due to excessive amounts of wastewater effluent, and reduced land area available for disposal. Variations in the quality of the slurry bleed stream to the thickener can either overload (high or "rich" solids content) or under-utilize (low or "lean" solids content) the primary dewatering subsystem. The ratio of sulfite to sulfate contained in the spent slurry stream is also important because of the size differences between gypsum (1 to 100 microns in length) and calcium sulfite crystals (0.5 to 2.0 microns in length). These differences can have a significant impact upon the dewaterability of the solid waste material. Generally, as the ratio of sulfite to sulfate increases, the liquor content of the dewatered solid waste also increases. Figure 5.2-3 provides a nomograph to convert between dry and wet sludge production.

5.2.2.8 Makeup Water Source and Consumption. Water is lost from the FGD process in the form of water vapor and small amounts of entrained liquid in the saturated flue gas. Water is also lost in the disposal of solid waste material or byproduct. Makeup water is added in order to offset these losses. Major addition points and/or uses of makeup water include reagent preparation and dilution, mist eliminator wash, pump seal water,

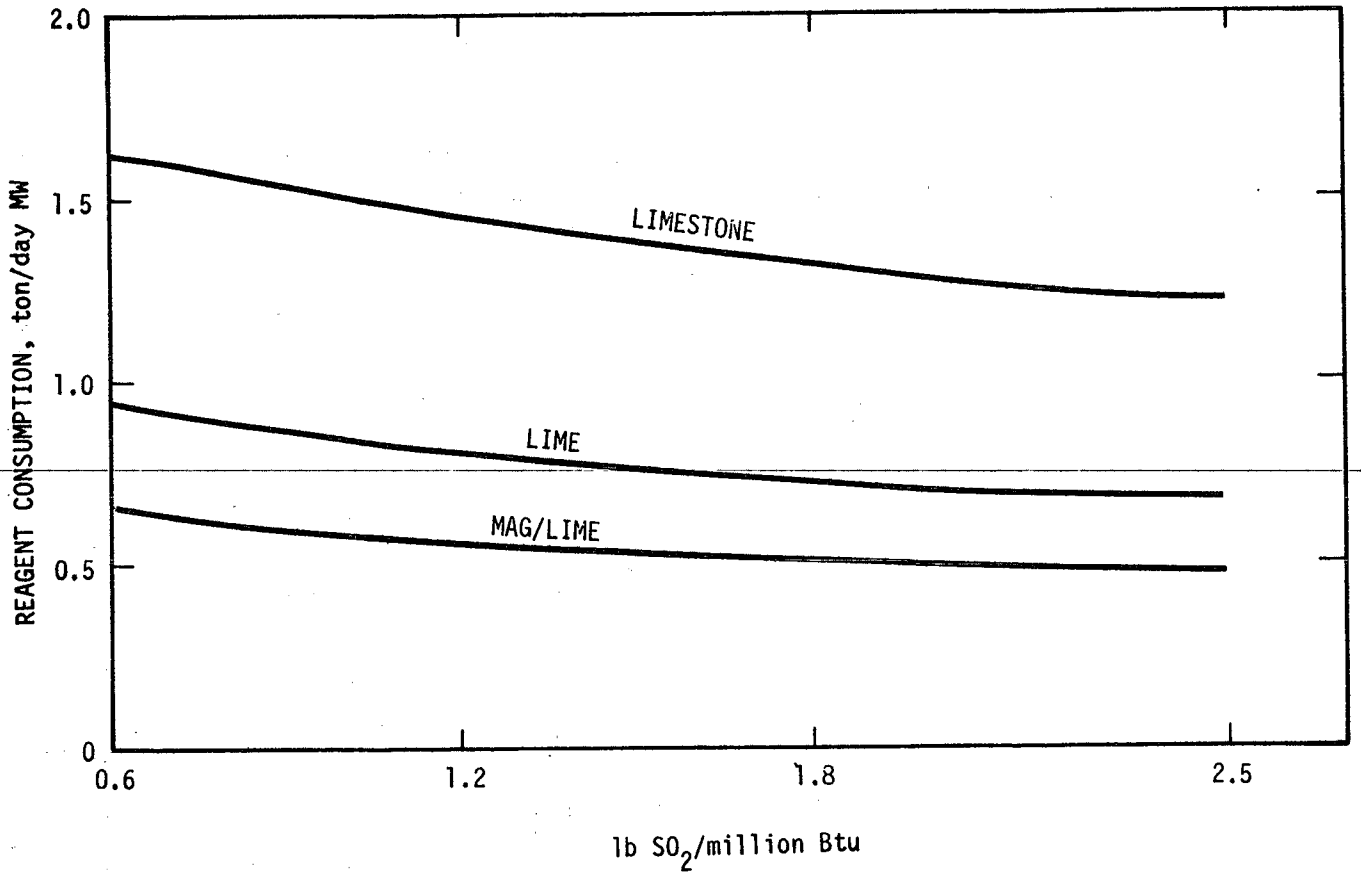

Figure 5.2-2. Reagent requirement calculation.

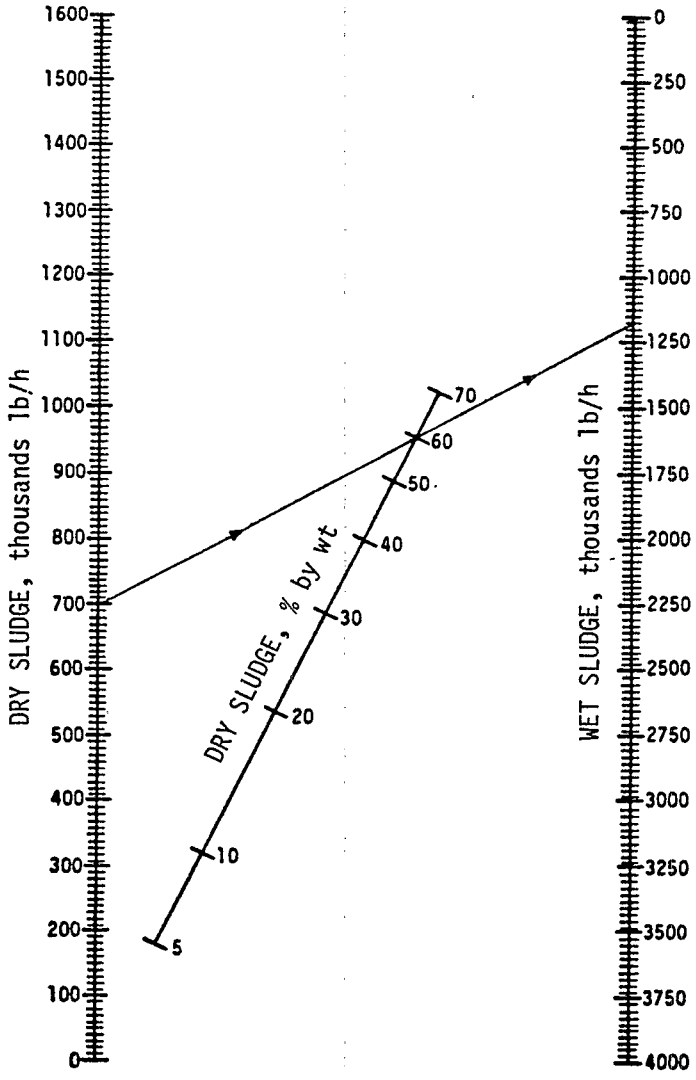

Figure 5.2-3. Sludge (waste) production calculation.

and recirculation tank level control. Sources of makeup water include fresh water, recycled water, and plant inventory water. Fresh water may come from a river, lake, a municipal water system, or an untreated well; recycled water is recovered from the solid waste disposal system either in a settling pond or in a settling or filtration step; and plant inventory water is cooling tower blowdown. The amount and type or quality of makeup water used is important when considering its effect on closed water loop operation, reagent preparation, and operability and cleanliness.

For closed water loop operation, makeup water addition should not exceed losses in the flue gas and solid waste material. High makeup water consumption could lead to discharges (or increased rates of existing discharge streams) to existing waterways. Contributing factors to high makeup water consumption include inefficient pump seals, excessive mist eliminator wash rates, and inefficient water recovery in the FGD process.

For reagent preparation and dilution, the importance of the quality of makeup water used for limestone slurry is typically not of critical concern and recycled (recovered process) water is used. The quality of makeup water required for slaking lime is very critical. The use of fresh water (of or near potable quality) is required.

Concerning equipment performance, mist eliminator wash water can be fresh, recycled, plant inventory, or a blend of the above. Ideally, fresh water should be used; however, to attain closed water loop operation, a blend is frequently used. A number of problems may be encountered due to the excess usage of recycled or plant inventory water. The high levels of dissolved salts in recycled water can promote scale formation on mist eliminator surfaces as well as mist eliminator wash lances. With the use of plant inventory water, the dissolved solids, suspended solids, and residual chlorine contaminants can subsequently lead to the scaling or erosion/corrosion of the mist eliminator wash lances,

absorber, piping, pumps, and other slurry handling equipment. Another major use of makeup water is addition to the recirculation tank for level control. Water quality is not a concern here except that residual alkalinity is desirable. Typical makeup water consumption rates and addition points are summarized in Table 5.2-3 for several operational lime/limestone slurry FGD systems.

5.2.2.9 Energy Consumption. FGD energy consumption is attributed primarily to reheat, flue gas flow, slurry preparation, and slurry recirculation. Other energy consuming operations include slurry transfer (pumping), tank agitation, solids dewatering (thickeners, vacuum filters, centrifuges), steam tracing, electrical instrumentation, and air supply. An increase in energy consumption in any of these areas usually indicates a problem.

Reheating the saturated flue gas consumes more energy than any other part of the FGD system (assuming reheat is used). Reheat provides buoyancy to the flue gas and thus reduces the nearby ground-level concentrations of pollutants. Reheat also prevents condensation of acidic, saturated gas from the absorber in the ID fan, outlet ductwork, or stack. Further, reheat minimizes the settling of mist droplets (as localized fallout) and the formation of a heavy steam plume with resultant high opacity. An increase in reheater energy consumption is generally indicative of plugged or scaled in-line reheater tube bundles. Energy consumption is increased because the heat transfer efficiency of the reheater tubes is lowered. Table 5.2-4 provides a quick approximation method to determine reheat energy consumption.

Driving flue gas through the FGD system consumes energy. Forced or induced draft fans use energy to overcome the gas-side pressure drop of the FGD system. An increase in fan energy consumption usually indicates either a mechanical problem with

TABLE 5.2-3. MAKEUP WATER CONSUMPTION RATES FOR OPERATIONAL LIME/LIMESTONE FGD SYSTEMS

Utility	Unit	No.	FGD capacity, MW	Process type	Loop	Makeup water, gpm	Makeup water addition points - gpm
Big River Electric	Green	1	242	Lime	Closed	366	Slakers - 290 gpm; pump seals - 76 gpm
Big Rivers Electric	Green	2	242	Lime	Closed	366	Slakers - 290 gpm; pump seals - 76 gpm
Cincinnati Gas & Electric	East Bend	2	650	Lime	Closed	464	Slaker - 1060 gpm
Columbus & Southern Ohio Electric	Conesville	5	350	Lime	Closed	500	
Columbus & Southern Ohio Electric	Conesville	6	350	Lime	Closed	500	
Duquesne Light	Phillips	1-6	408	Lime	Open	350	Slaker, pump seals, fans, and mist eliminators
Kentucky Utilities	Green River	1-3	65	Lime	Closed	75	
Louisville Gas & Electric	Cane Run	4	188	Lime	Closed	100	
Louisville Gas & Electric	Mill Creek	1	358	Lime	Closed	1984	Reaction tank - 1412 gpm; other - 572 gpm
Louisville Gas & Electric	Mill Creek	2	350	Lime	Closed	1984	Reaction tank - 1412 gpm; other - 572 gpm
Louisville Gas & Electric	Mill Creek	3	427	Lime	Closed	150	
Louisville Gas & Electric	Paddy's Run	6	72	Lime	Closed	50	
Utah Power & Light	Huntington	1	366	Lime	Closed	300	
Alabama Electric	Tombigbee	2	179	Limestone	Closed	157	Seal water - 18 gpm; mist eliminator 139 gpm
Alabama Electric	Tombigbee	3	179	Limestone	Closed	157	Seal water - 18 gpm; mist eliminator 139 gpm
Arizona Electric Power	Apache	2	98	Limestone	Open	1840	Mist eliminator wash and slurry preparation
Arizona Electric Power	Apache	3	98	Limestone	Open	1840	Mist eliminator wash and slurry preparation
Arizona Public Service	Cholla	1	119	Limestone	Open	120	
Arizona Public Service	Cholla	2	285	Limestone	Open	120	
Associated Electric	Thomas Hill	3	670	Limestone	Closed	772	
Basin Electric Power	Laramie River	1	570	Limestone	Closed	269	Mist eliminator wash, pump seals and tower makeup

(continued)

TABLE 5.2-3 (continued)

Utility	Unit	No.	FGD capacity, MW	Process type	Loop	Makeup water, gpm	Makeup water addition points - gpm
Basin Electric Power	Laramie River	1	570	Limestone	Closed	269	Mist eliminator wash, pump seals and tower makeup
Central Illinois Light	Duck Creek	1	416	Limestone	Closed	600	Mist eliminator, ball mill, pump seals
Colorado Ute Electric	Craig	1	455	Limestone	Closed	321	Wash tanks - 204 gpm; pump seals - 117 gpm
Colorado Ute Electric	Craig	2	455	Limestone	Closed	321	Wash tanks - 204 gpm; pump seals - 117 gpm
Indianapolis Power & Light	Petersburg	3	532	Limestone	Closed	882	Mist eliminator wash tank
Kansas City Power & Light	La Cygne	1	874	Limestone	Open	1148	Fresh water - ball mill; settling pond return water - recycle tank
Kansas Power & Light	Jeffrey	1	540	Limestone	Closed	577	
Kansas Power & Light	Jeffrey	2	540	Limestone	Closed	577	
Lakeland Utilities	McIntosh	3	364	Limestone	Closed	228	
Michigan So. Central Power Agency	Project	1	55	Limestone	Closed	85	
Public Service Indiana	Gibson	5	670	Limestone	Closed	609	
Salt River Project	Coronado	1	320	Limestone	Open	270	Mist eliminator wash tanks and thickener
Salt River Project	Coronado	2	320	Limestone	Open	270	Mist eliminator wash tanks and thickener
San Miguel Electric	San Miguel	1	400	Limestone	Closed	600	
Sikestown Brd of Municipal Utilities	Sikeston	1	235	Limestone	Open	186	
South Carolina Public Service	Winyah	2	140	Limestone	Open	100	
Springfield Water, Light & Power	Dallman	3	205	Limestone	Closed	239	Mist eliminators and pump seals
Texas Municipal Power Agency	Gibbons Creek	1	400	Limestone	Closed	580	
Texas Utilities	Martin Lake	1	595	Limestone	Closed	550	
Texas Utilities	Martin Lake	2	595	Limestone	Closed	550	
Texas Utilities	Martin Lake	3	595	Limestone	Closed	550	
Texas Utilities	Monticello	3	800	Limestone	Closed	546	

TABLE 5.2-4. ENERGY REQUIREMENT CALCULATIONS

C_p = Specific heat, Btu/(lb)(°F)

P = Power required, kilowatts

E = Heat energy, Btu

H_s = Head, ft

L/G = Ratio of slurry flow to flue gas rate, gal/1000 acf at the outlet

$\overset{o}{m}$ = Air flow rate at the inlet of reheat section, lb/min

ΔP = Pressure drop through FGD system, in. H_2O

Q = Gas flow rate at the outlet of absorber, acfm

ΔT = Degree of reheat, °F

1. Slurry recirculation pumps (70% pump efficiency assumed)

$$P = 0.000269 \times H_s \times (L/G) \times \frac{Q}{1000}$$

$$= H_s\ (L/G)\ Q \times (2.69 \times 10^{-7})$$

2. Flue gas fans

$$P = 0.0002617 \times \Delta P \times Q \text{ (assuming 80\% efficiency)}$$

3. Reheat of absorber flue gas

$$E = 0.01757\ \overset{o}{m}\ C_p\ \Delta T$$

the fan and/or an increase in pressure drop somewhere in the FGD system. Table 5.2-4 provides a quick approximation method to determine FGD fan power requirements. Figure 5.2-4 provides a quick determination method if only plant size and gas-side pressure drop are known.

The grinding of limestone and the slaking of lime consume relatively small amounts of energy as compared to other energy consuming equipment. Any increases are usually due to either poor quality makeup water (see Section 5.2.2.8) or mechanical problems with the slaker or ball mill.

Energy is consumed to recirculate the slurry to the absorber, to transfer water and slurry streams to various parts of the FGD system, and to treat and dispose of the solid waste material. Similar to fans, an increase in pumping energy consumption usually indicates either a mechanical problem or an increase in slurry side pressure drop in the system. Table 5.2-4 provides a quick approximation method to determine recirculation pumping requirements. Figure 5.2-5 also provides a quick determination for slurry recirculation pumping requirements if plant size and L/G are known.

5.2.3 O&M

Operation and maintenance data include recorded data in operation log books, maintenance requests, maintenance log books, work orders, and equipment purchase orders.

Operation log books and the types of information recorded varies from plant to plant. Example log sheets are shown in Figures 5.2-6 and 5.2-7. In Figure 5.2-6, the operation log sheet simply records the status of equipment and the time of operational changes. In Figure 5.2-7, the operation log sheet records only information on certain process parameters (slurry pH, slurry level, slurry density, etc.).

With the increasing complexity of current FGD technology, most utility operators employ computerized maintenance planning

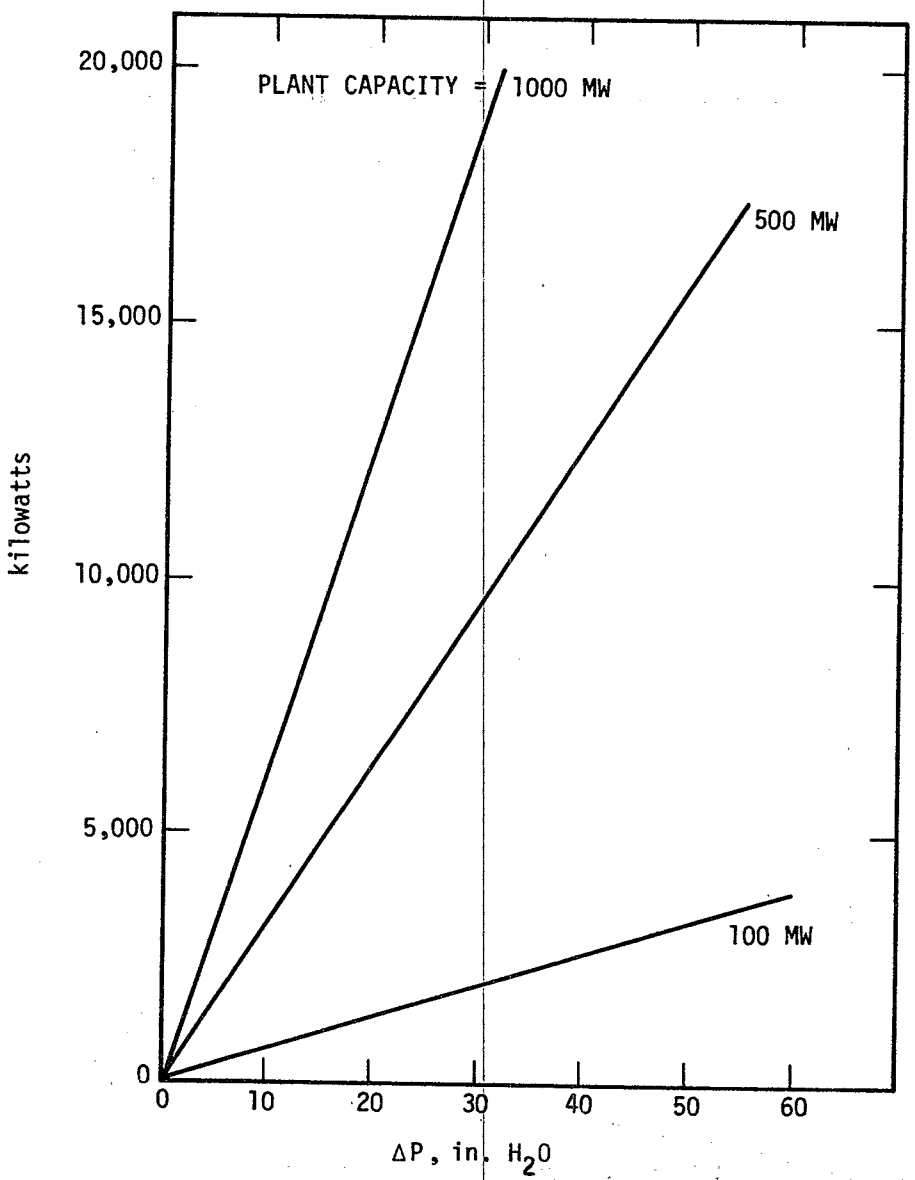

Figure 5.2-4. Fan power requirements.

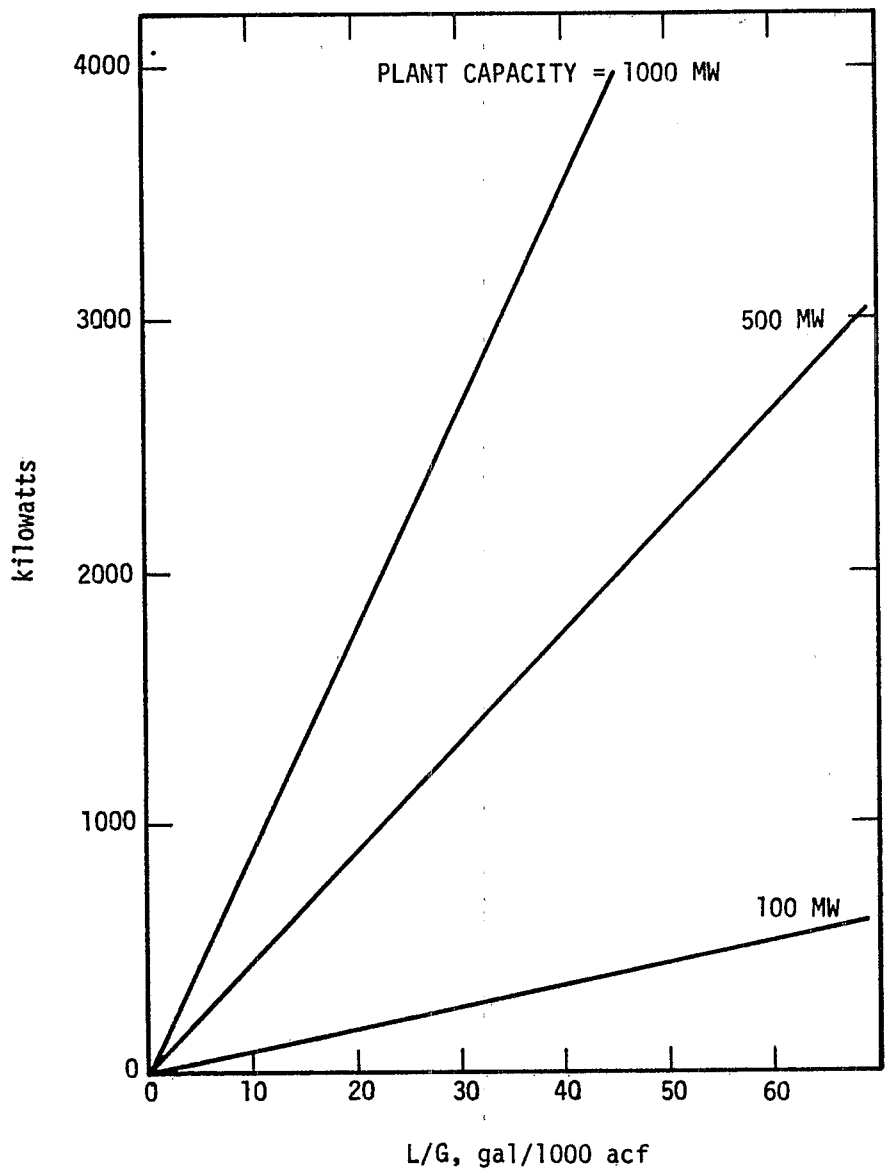

Figure 5.2-5. Recirculation pump power requirements.

ABSORBER OPERATION LOG

(Indicate Status of Equipment and Time of Operational Changes)

DATE	ABSORBER MODULES IN	ABSORBER MODULES OUT	BYPASS OPEN-PARTIAL-CLOSED			REASONS FOR ABSORBER BEING OFF OR BYPASSED

Figure 5.2-6. Example operation log sheet.

DATE _____

DAY _____

DAILY READINGS

UNIT 2

	2A ABSORBER (AB)						RECIRCULATION TANK (RT)		2B ABSORBER (AB)							LIMESTONE MILL		
	AB LEVEL	AB DENSITY	AB pH	MIST ELIM. GAL.	SEAL AIR PRES.		RT DENSITY	RT pH	AB LEVEL	AB DENSITY	AB pH	MIST ELIM. GAL.	SEAL AIR PRES.		RT DENSITY			REAGENT GAL. UNIT 2
	FT	GRAMS			IN	OUT	GRAMS		FT	GRAMS			IN	OUT	GRAMS	DENSITY GRAMS	AMPS	PRES.
0200																		PREV.
0400																		TOTAL
0600																		REAGENT GAL. UNIT 3
0800																		
1000																		PRES.
1200																		PREV.
1400																		TOTAL
1600																		
1800																		LIMESTONE TONS
2000																		
2200																		PRES.
2400																		PREV.
																		TOTAL
																		MILL HOURS
																		PRES.
																		PREV.
																		TOTAL

UNIT 3

	3A ABSORBER (AB)						RECIRCULATION TANK (RT)		3B ABSORBER (AB)							
	AB LEVEL	AB DENSITY	AB pH	MIST ELIM. GAL.	SEAL AIR PRES.		RT DENSITY	RT pH	AB LEVEL	AB DENSITY	AB pH	MIST ELIM. GAL.	SEAL AIR PRES.		REAGENT TANK LEVEL	
	FT	GRAMS			IN	OUT	GRAMS		FT	GRAMS			IN	OUT	FT	REMARKS
0200																
0400																
0600																
0800																
1000																
1200																
1400																
1600																OPERATOR
1800																
2000																GRAVEYARD
2200																DAYS
2400																EVENINGS

Figure 5.2-7. Example operation log sheet.

systems. Work orders are first written by operators during shift inspections. In some cases, work orders are preceded by "tagging" in which the plant or shift supervisor routinely inspects the system and tags equipment apparently in need of maintenance or repair. These work orders specify the equipment needing repair, the estimated number of man-hours, possible causes of the problem, and the urgency of completion (i.e., date needed by). The work order is then sent to the maintenance department for action. The maintenance crew completes the maintenance portion of the work order form by noting the actual cause of the problem, the work conducted, and the man-hours needed to complete the job. All of this information is then computerized for later reference. As this database expands, it becomes a source for forecasting equipment repairs which can be implemented during scheduled FGD outages, unit outages, or periods of low demand. For certain recurring repairs, work orders can be generated automatically by the computer versus being handwritten by an operator. Figures 5.2-8 and 5.2-9 are examples of, respectively, handwritten and computer-generated work order/maintenance forms.

The accounting department of the operator utility should have records on equipment purchase orders. This type of data can be used to spot recurring purchases which may indicate chronic problem areas.

5.2.4 Observation

Sources of observational data include the operation of the FGD system, layout of and access to the equipment contained in the FGD system, equipment "consumed" by the FGD system, and general housekeeping of the FGD system area.

5.2.4.1 System Observation. During an inspection, the field inspector should look for signs which indicate possible problem areas. Several examples of these include gas leakage; slurry leakage; tower, vessel, and ductwork appearance; and the behavior of moving components.

WORK ORDER

Priority/Level _____ WORK ORDER NO. **90** 046041 **9**

Station _____ Unit _____ Date Printed _____

Component _____ Equipment No. _____

_____ Unit Status _____

Requested By _____ Group _____ Requested Completion Date _____

Attach List: Work ☐ Inspection ☐ Settings ☐

Work Description: _____

Special Instructions: _____

RESPONSIBLE GROUP	SUPERVISOR	SCHEDULED COMPLETION
WORK TYPE	PURCHASE ORDER NO.	DATE ISSUED
CHG/CWO/RWO NUMBER	PLANNER	EST. MANHOURS-ACT.
FERC #	PLANNED WORK	
OUTAGE INDICATOR	EST. CREW SIZE	

Cause of Problem:

WORKFORCE MGT. CODE

9-Labor (Productive)
1-Travel Time
2-Inclem. Weather
3-Delay Time
4-Down Time

*Use code as last digit of work order number on pay records.

	A	
	B	
	C	
	D	
	WELD.	
	MACH.	
	OPER.	
	CONTR.	
	OTHER	
	TOTAL MH	

25 50 75 100 % COMPLETE

Work Performed: _____

Date & Time Tagged: _____ Date & Time Detagged: _____

WORK PERFORMED BY	WORK PERFORMED TYPE CODE	
ACTUAL CREW SIZE	COMPLETED BY	DATE COMPLETED

Figure 5.2-8. Example of a handwritten work order form.

PM03 POWER MAINTENANCE INFORMATION SOURCE RUN DATE: 2/12/85
JOB ORDER-BOILER A

¦JOB NO: 02585 DEPT: 3892 SCHED WEEK: 10/1985 FREQUENCY: 0006¦
¦JOB TITLE: INSPECT, REPAIR, ADJUST & LUBRICATE ¦
¦UNIT: 1 SYSTEM: SCR EQUIP: 56/DAMPER/0100/ A/C EQ.NO: AC-2892-2 ¦
¦DESCRIPTION: MODULE "E" OUTLET ISOLATION DAMPER ¦
¦DESC CONT.: ¦
¦MANUFACTURER: AIRCLEAN MODEL NO: N/A ¦
¦LOCATION: BLG. SCR NORTH-SOUTH E.0 EAST-WEST 11.5 EL. 182.6 ¦
¦CAPABILITY REDUCTION: 0000 PRIORITY: 05 CLEARANCE REQUIRED: YES ¦
¦ESTIMATED MANHOURS: 3: 0000.00 2: 0002.5 1: 0002.5 G: 0000.00 T: 5.00 ¦

INSTRUCTION BOOK:
DRAWINGS:
LAST COMPLETED: 09/07/84

HAD TO CLIMB BEAMS TO PERFORM - COMPLETED - BERNIE AND RADHA

JOB STEPS:
DAMPER CHAIN P.M. - ISOLATION DAMPERS
01 WORK SAFELY - CHECK ALL CLEARANCES.
02 CLEAN OIL AND DUCT ACCUMULATION FROM CHAIN WITH SOLVENT.
03 RELUBRICATE WITH SPECIFIED LUBRICANT.
04 CHECK CHAIN TENSION. ADJUST AS NEEDED.
05 CLEAN WORK AREA.

PAGE 1 OF 1

AREA: 004 ACCT: 512.15 WORK ORDER:

ASSIGNED TO_____DATE_____HOUR_____
COMPLETED BY_____DATE_____HOUR_____
REMARKS_____
_____
_____
_____
APPROVAL_____FAILURE CODE_____

Figure 5.2-9. Example of a computer-generated work order form.

Gas leakage usually occurs through expansion joints, dampers, or ductwork. With positive pressure (forced draft) systems, flue gas can escape to the surrounding plant environment (which may be further complicated by an enclosed operation). Such a problem will not be readily observable in negative pressure (induced draft) systems in which air is drawn into the FGD system. This air can promote corrosion, promote scaling due to uncontrolled oxidation, and increase the amount of gas to be handled by the gas handling and treatment subsystems.

Broken slurry lines and leaky pumps and valves can provide information concerning equipment maintenance, materials of construction, and characteristics of the slurry. Absorber tower appearance, inside and outside, also provides such information. Vibrating fans and pumps and pump cavitation all provide clues regarding maintenance, materials of construction, and system operation. Dampers which are inoperative due to mechanical failure or absorber recirculation lines which are cold to the touch because of plugging are examples of equipment items which also provide information concerning system operation.

5.2.4.2 Equipment Layout/Access. Equipment layout and access can influence performance (see Section 2.5.2, System Layout and Accessibility). For example, layout of ductwork and piping is very important when considering system operation. Excessive bending in ductwork can result in added pressure drop, increased erosion, poor gas distribution, and convenient host sites for collecting solids and moisture. Excessive bending of piping can result in high slurry pressure drop, pump cavitation, and host sites for erosion and solids buildup. These types of problems are more prevalent in retrofit FGD systems (versus new systems) due to spatial constraints.

Access to equipment, also a function of plant layout, is important for maintenance purposes. Major and minor cleanout is required periodically. Manholes should be present at each stage of the absorber. Similarly, side doors should be located in the

reaction tank. Tons of deposits may have to be removed each maintenance period; doors should thus be large enough for easy removal of such quantities of material. To simplify repairs, mist eliminator access should allow for easy cleaning or replacement of the components. A walkway should be available for worker safety and the prevention of damage to mist eliminator assemblies and blades. Mist eliminator sections should be light in weight and come in small sections for easy removal by maintenance personnel to save man-hours. Slurry recirculation pumps are often located in a limited space with difficult access, especially in retrofit applications. Because these pumps must be dismantled periodically, sufficient access should be made available to facilitate maintenance. A winch-and-trolley system for moving heavy parts, ample space for dismantled components, and good lighting will simplify repairs. Often the recirculation pump area is the most unsightly part of the FGD facility. A constant stream of seal water, slurry, and oil leaks from the pumps are found even in well-maintained systems. Therefore, the pump area should be designed for easy cleaning, with such features as sloping floors, wide floor trenches, and a good supply of water. Other equipment items such as fans, agitators, and instrumentation (pH meters, density meters, etc.) should also have adequate spacing for maintenance. Equipment located in confined or inaccessible spaces tend to see less maintenance and prolonged maintenance repair times.

5.2.4.3 Consumed Equipment. Used equipment can provide insights to possible operating problems. Commonly observed items include pump impellers and liners, spray nozzles, mist eliminator blades, and absorber internals.

Erosion, plugging, and thermal stress are common reasons for spray nozzle replacement. Eroded and plugged spray nozzles may indicate a process chemistry problem or a mechanical problem due to slurry distribution or flue gas distribution in the absorber.

Mist eliminator packing is usually replaced because the packing is either damaged or plugged. Mist eliminators constructed of certain plastics can easily be damaged (through thermal stress) at high temperatures. Melted or brittle mist eliminators usually indicate a gas temperature control problem (i.e., high temperature excursion). Mist eliminator replacement because of plugging is usually the result of gypsum scale formation.

Displaced, plugged, or damaged absorber internals (packing, supports, spray headers, nozzles) are also indicative of system reliability and performance. Packing material can be commonly observed in the recirculation tank or thickener due to the high flue gas flow and/or high slurry flow. Plugged packing is an indicator of gas slurry distribution or process chemistry problems.

Pump impellers are usually replaced due to plugging, corrosion, or loss of lining material. Plugged impellers may indicate excessive solids in the slurry. Corroded impellers indicate either problems with material of construction or process chemistry. Erosion or loss of pump liners may indicate improper lining materials, poor installation, high slurry solid levels, or pump cavitation due to low slurry flow.

The above items and their possible reasons for replacement are just common examples of what the field inspector will come across during a plant inspection.

5.2.4.4 General Housekeeping. The overall cleanliness of the FGD facility provides insight to the following: quality of maintenance procedures, size and type of maintenance staff, and the priority the operator utility gives to the FGD system in comparison to other plant unit operations. A clean and well-maintained facility will most likely be the result of a well-organized and managed staff who are probably using some sort of computer-based maintenance planning system. Good housekeeping is also an indication that the maintenance staff is well-manned and is more likely dedicated versus borrowed from other service areas (boiler

staff, on-site contractors, etc.). When compared to the boiler facility, how well the FGD system is maintained gives a good indication of how the FGD system is looked upon by the operator utility.

5.3 PROBLEM DIAGNOSIS AND CORRECTIVE MEASURES

This section describes guidelines to aid the field inspector in diagnosing problems affecting lime/limestone slurry FGD systems and in recommending potential corrective measures to remedy these problems. This section represents a continuation of Section 5.2 in which guidelines were described to interpret performance data with respect to compliance status. We extend this discussion by identifying the cause-and-effect relationships of the various problems which affect FGD systems (Section 5.3.1). These relationships are analyzed by the "triggering" event which initiates the problem sequence and the "terminating" symptom by which the problem is manifested (see Section 2.5.1, Failure Modes). This discussion is then extended to the corrective measures instituted to rectify these problems (Section 5.3.2). This division of material is provided because the corrective measure sequence is typically a more involved procedure than a simple reversal of the problem sequence.

5.3.1 Problem Diagnosis

Diagnosing problems affecting lime/limestone slurry FGD systems involves the identification of problem sequences (failure modes). Problem sequences are cause-and-effect relationships consisting of a triggering event which initiates the problem and a terminating event which manifests the problem. These problem sequences are distinguished as either the simple variety (where the sequence of events are closely connected) or cascading variety (where the sequence of events are connected through a series of intermediate events). These sequences can be described in terms of simplified block diagrams representing the equipment

areas and subsystems identified in Section 2.4.2 (FGD System Design Configurations).

5.3.1.1 Gas Handling and Treatment. The gas handling and treatment equipment area is comprised of the subsystems of fans, scrubbers, absorbers, mist eliminators, reheaters, ductwork, dampers, and stack (Section 2.4.2). These subsystems can be arranged in a variety of configurations according to process, application, and duty considerations. The various configurations presently used in commercial lime/limestone slurry FGD systems are presented in Figure 5.3-1

As indicated in Figure 5.3-1, there are ten configurations now in commercial use in lime/limestone slurry processes. These configurations are divided according to scrubber-absorber combinations (listed in the top portion of Figure 5.3-1) and absorber (only) configurations (listed in the lower portion of Figure 5.3-1). Of the configurations listed, more pertain to scrubber-absorber combinations than to absorber combinations simply because of the additional variation of fan placement between the scrubber-absorber train (Gas Configurations III and IV).

Each configuration listed includes a set of "fixed" subsystems that are common to all the configurations listed; namely--inlet ductwork, absorber, mist eliminator, outlet ductwork, and stack. All the other subsystems (fan, scrubber, and reheater) can vary according to presence (scrubber and reheater) and position (fan and reheater) in the configuration. Of the gas configurations listed (designated as Gas Configurations I through X), some are used far more extensively than others. The more prevalent configurations are consistent with the characteristics of technology generation described in Section 2.4.1.2 (Gas Configuration IX and X). These characteristics include placement of the fan upstream (forced draft) of the absorber, elimination of the scrubber in favor of segregated particulate control (upstream ESP), use of the absorber for segregated SO_2 control, and the use

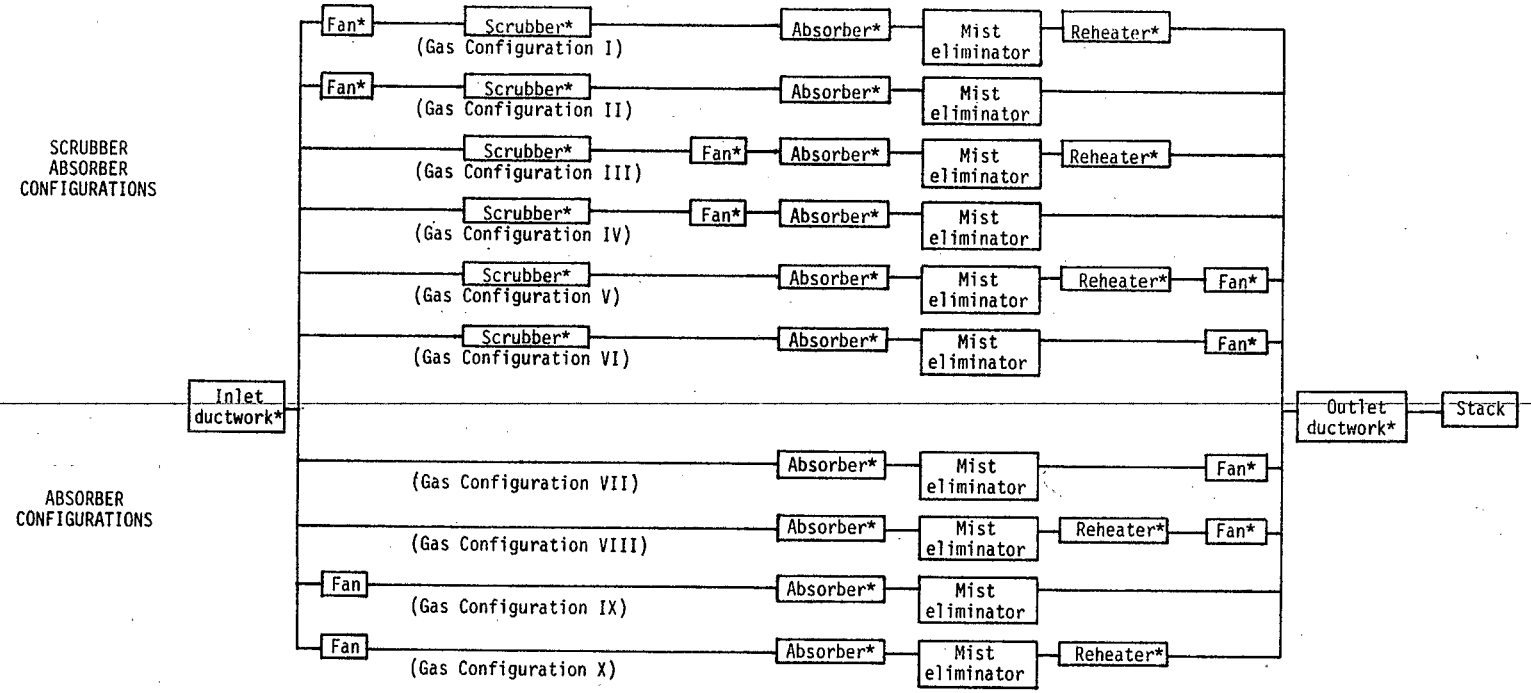

*The damper subsystem is not shown separately. Dampers can be provided for each designated subsystem. Isolation and control dampers for ductwork, control dampers for fans, isolation dampers for scrubbers and absorbers, and control dampers for bypass reheat.

Figure 5.3-1. Gas handling and treatment subsystem arrangements.

of a reheater to maintain gas temperatures above dew point in the discharge ductwork and stack.

The cause-and-effect problem sequences which occur in the gas handling and treatment area are described below in terms of the triggering event causing the problem and the terminating symptom manifesting the problem.

- Fan. Forced draft fans (upstream of the scrubber/absorber), as depicted in Gas Configurations I, II, IX, and X of Figure 5.3-1, depend on the operation of the upstream particulate matter collection device (typically ESP). Variations or degradation of performance in the particulate matter collector can lead to solids deposition or erosion of the rotor, inlet box, housing, and discharge duct (see Section 2.4.2.1, Fans). The following simple and cascading problem sequences can result:

  - Accelerated wear and holes in fan housing

  - Erosion ("sandblasting") of rotor, causing loss of draft across system (inability to overcome gas-side pressure drop) which can lead to loss of absorber SO_2 removal efficiency, loss of duct velocity and settling out of gas-entrained solids in the duct, or premature motor failure (motor compensates for mechanical failures).

  - Leakage of air into fan (through inlet ductwork or fan intake), causing gas temperature drop and dew point corrosion attack in fan and inlet duct; greater volume of gas into system, causing increase in pressure drop, loss of absorber SO_2 removal efficiency, premature motor failure; greater amount of oxygen in system, causing uncontrolled oxidation and process chemistry problems of gypsum scaling in absorber tower.

  Induced draft fans (downstream of the scrubber/absorber), as depicted in Gas Configurations V through VIII, have a less cascading influence on FGD operation due to the minimization of downstream equipment. Any impacts on downstream equipment will be similar to those described above for FD fans. However, ID fans are more influenced by the operation of upstream subsystems than FD fans. Accordingly, they can be involved in a greater number of cascading problem sequences associated

with the scrubber, absorber, mist eliminator, or reheater.

These sequences are described below as these particular subsystems are discussed.

° Scrubber. Scrubbers, as depicted in Gas Configurations I through VI of Figure 5.3-1, provide supplemental or primary particulate removal and supplemental SO_2 removal. The scrubber subsystem also includes presaturator and quench towers that condition the gas stream prior to SO_2 absorption (see Section 2.4.2.2, Scrubbers/Absorbers). A scrubber that is part of an SO_2 scrubber-absorber train is generally of the venturi (particulate scrubber) or spray tower (presaturator or quench) design. These represent "open" (i.e., lacking internals) designs that are generally not subject to plugging or scaling. Variations or degradation in scrubber performance can result in a number of simple and cascading problem sequences.

- If the scrubber is preceded by an ESP, degradation in the performance of the ESP can lead to increased particulate loading to the scrubber and a subsequent degradation in scrubber performance. This can be evidenced either by increased scrubber pressure drop to maintain performance levels (and therefore greater system power consumption by the fans) or erosion of scrubber internals due to the increased loading.

- If the fans are forced draft with respect to the scrubber, degradation in their performance can cause variations in gas volume and draft, resulting in degradation of particulate capture and SO_2 removal across the scrubber.

- Venturi scrubbers typically operate at a turndown ratio of 2 to 2.5:1. At high and low gas volumes, the scrubber has a difficult time maintaining performance level (i.e., load-following is complicated by limitations in mechanical ability of scrubber to control pressure drop across throat). Subsequent degradation in particulate matter capture and SO_2 removal are experienced at these conditions.

- Degradation in scrubber performance can affect absorber performance by increased particulate matter loading or SO_2 loading. Particulate loading can result in erosion of internals. This can cascade

to the mist eliminator (resulting in plugging) and on to the in-line reheater (resulting in decline of heat transfer efficiency); this in turn can result in dew point corrosion to downstream subsystems of ID fans, outlet ductwork, and stack. SO_2 loading can result in degradation of SO_2 removal efficiency because of greater-than-design SO_2 loading entering the absorber tower.

- If the scrubber also provides physical conditioning of the gas (quenching or saturation to reduce temperature and volume), degradation in performance can result in thermal stress damage to absorber internals.

- Solids buildup at the wet/dry interface area where scrubber slurry contacts the gas can result in gas stream channeling or buildup in pressure drop, which can lead to degradation of scrubber tower performance and subsequent cascading results as noted above.

° Absorber. Absorbers are depicted in every configuration shown in Figure 5.3-1 (fixed subsystem). The absorber can be part of a scrubber-absorber train (Gas Configurations I through VI) or as the absorber only (Gas Configurations VII through X). The absorber represents the heart of the FGD system in that the primary role of the FGD system is fulfilled there--the removal of SO_2 from the flue gas. As the focal point of the FGD system, the absorber is also the focal point of problem sequences--either as the initiating or terminating event in both simple and cascading relationships. A number of absorber impacts from the upstream subsystems of fans and scrubbers are described in the preceding sections. Other significant problem sequences are described below.

- Degradation in the performance of the absorber can lead to loss of SO_2 removal efficiency and result in non-compliance.

- Degradation of absorber performance can occur due to a variety of contributing factors in the upstream gas circuit. They include variations in gas flow, resulting in tower overloading or "flooding" (high gas flow) or tower "weeping" (low gas

flow)*; variation in gas (SO_2) composition, resulting in reduced SO_2 removal (high SO_2) or chemistry upsets such as high pH or soft scale formation (low SO_2); degradation in upstream particulate collection devices (ESP and/or scrubber) described above; degradation in upstream fan performance described above; and degradation in upstream scrubber performance described above.

- Degradation in absorber performance can occur due to a number of contributing factors in the slurry feed circuit (see Section 5.3.1.2, Reagent Preparation and Feed). Insufficient slurry feed, low slurry pH, and high slurry pH can result in low SO_2 removal, solids accumulation and pressure drop buildup across the tower, solids entrainment in absorber discharge gas stream, and corrosion/erosion of internals.

- Degradation in absorber performance (due to gas-side or slurry-side factors) can affect downstream subsystems through a series of simple or cascading sequences. Solids deposition on the mist eliminator can occur through scaling or plugging. Mist eliminator pressure drop buildup can take the absorber out of service. Inefficient mist eliminator performance can contribute to carryover of entrainment to the downstream damper(s), reheater (if present), ID fans, duct, or stack. Subsequent solids buildup and corrosion/erosion can take these subsystems out of service. If an in-line reheater exists, solids can buildup on the tubes, cutting down heat transfer efficiency. Reduced reheater efficiency can result in dew point corrosion to downstream ID fans, ductwork, dampers, and stack.

° Mist Eliminator. Mist eliminators are shown as a separate subsystem in every gas configuration in Figure 5.3-1 (fixed subsystem). Before proceeding, however, a

*Flooding is a condition which occurs in a packed tower where gas flow is increased at a given slurry flow rate and slurry is suspended at the top of the packing and entrained in the discharge gas stream. Weeping is a condition which occurs in a tray tower where gas flow is insufficient to maintain a slurry suspension on the trays and the slurry flows unimpeded downward through the tower.

clarification of the mist eliminator subsystem is in order (see Section 2.4.2.3, Mist Eliminator). First, although the mist eliminator is shown as a separate subsystem downstream of the absorber, it is typically contained within the absorber tower in the proximity (downstream) of the slurry spray zone. Therefore, it is not a separate physical entity. Secondly, both scrubbers and absorbers are typically equipped with mist eliminators. In FGD systems, however, the absorber mist eliminator is of overriding importance. Since the mist eliminator is, in effect, a specialized operation within the absorber, many of the same considerations that apply to the absorber apply to the mist eliminator as well. In effect, the mist eliminator is extremely sensitive to the mechanical and chemical operating aspects of the absorber. Any upset in the absorber will most of the time also manifest itself in the mist eliminator. Any mist eliminator outage will also require the absorber to be taken out of service. Other problem sequences peculiar to the mist eliminator are described below.

- Mist eliminator self-cleaning occurs through an automatic water wash system which systematically cleans the mist eliminator assembly. The wash water is delivered through high pressure spray nozzles and piping. Mechanical failure in this system can result in localized or generalized solids buildup, resulting in gas channeling and carryover of entrainment and/or pressure drop buildup across the mist eliminator.

- The mist eliminator wash water may typically consist of some portion of clarified liquor recovered from primary solids dewatering, secondary solids dewatering, or the disposal site (see Section 5.3.1.3, Waste Solids Handling and Disposal). This liquor can contain high levels of dissolved salts which represent SO_2 reactants or products (calcium sulfite, sulfate, carbonate, chlorides, etc.). Depending on concentration levels, these salts can precipitate and accumulate on the mist eliminator through physical or chemical means (i.e., the alkaline salts react with the residual SO_2 in the gas stream from the absorber, forming sulfite/sulfate reaction products).

- With few exceptions, the mist eliminators are constructed of plastic (with or without fiberglass reinforcement). These materials are subject to thermal stress. (N.B. Many mist eliminators are

now constructed of materials designed to withstand high temperatures [400°F]. However, these materials are designed ["guaranteed"] to withstand limited exposures to high temperatures. As exposure time accumulates, the effects of thermal stress begin to take place.) In the event of a sudden loss of slurry or liquor feed to the absorber or preceding scrubber (including quencher or presaturator), the hot gas (300°F) may melt or disfigure the mist eliminator vanes.

° Reheater. Reheaters represent an optional subsystem that always follows the absorber and mist eliminator and precede the ID fan and/or discharge ductwork and stack. (Gas Configurations I, III, V, VIII, and X of Figure 5.3-1.) As described in Section 2.4.2.4, three generic reheat strategies are used: in-line, indirect hot air, and flue gas bypass. Of these, in-line reheat is the most sensitive to problems because of its presence in the gas stream, making it vulnerable to upsets in upstream operations. Upstream operations of importance are the scrubber/absorber and mist eliminator. A number of problem sequences involving these subsystems affecting the reheater were described earlier. Problem sequences that are peculiar to the reheater alone are described below.

- Reheater self-cleaning occurs through an automatic soot blowing system which systematically cleans the tube bundles with either steam or air. The steam or air is delivered through retractable high pressure lances which rotate axially through 360 degrees for maximum coverage. Mechanical failure in this system can result in localized or generalized solids buildup, which can result in reduced heat transfer, downstream dew point corrosion, and ultimately, tube bundle failures.

- Reheater tube failures typically occur at the weld in the tube bend facing the discharge gas stream from the mist eliminator (absorber). A tube failure obviously causes a decline in the heat transfer to the gas, resulting in insufficient temperature boost and the danger of downstream dew point corrosion (especially in the upper portions of the stack because a partial failure will show up at the point of maximum radiative heat loss). A tube failure, if not attended to immediately, will trigger other tube failures in the immediate vicinity due to the corrosive/erosive action of the heating medium and flue gas environment.

- Flue gas bypass reheat is extremely dependent on proper design and operation of control dampers regulating the flow of gas into the absorber and bypass duct. Improper operation in the form of a partial or a complete failure (inability to go to a fully opened or closed position) can allow either too much or too little gas flow into the bypass duct (meaning low or high gas flows into the absorber, respectively). This can cause low SO_2 removal in the absorber (noncompliance); thermal stress in the outlet ductwork and stack; dew point corrosion attack in the outlet ductwork and stack; and carryover of entrainment to the outlet ductwork and stack (scrubber-generated particulate matter, opacity violation, stack rainout).

- Indirect hot air reheat is extremely dependent on the proper flow and distribution of hot air injected into the scrubbed gas stream to achieve the desired level of reheat. This is more of a design consideration than an operating consideration. Insufficient residence time and/or mixing can cause an uneven (stratified) gas temperature profile, resulting in localized dew point corrosion attack and/or localized thermal stress damage in the downstream ID fan (optional), ductwork, or stack.

° Ductwork. Inlet and outlet ductwork are fixed subsystems of every configuration depicted in Figure 5.3-1. Many of the simple and cascading problem sequences associated with the ductwork have been described in the preceding discussion. A number of additional problem sequences associated with the ductwork subsystem are discussed below. These sequences are associated more with design considerations than operating considerations. A problem specifically inherent to ductwork is an inability to obtain a representative gas sample or gas flow measurement. This could bias any manual or continuous monitoring performance or guarantee measurements.

- Insufficient or excessive cross-sectional area of the ductwork's inner diameter will result in excessive or insufficient gas velocities, respectively, causing carryover of entrainment, settling out in the ducts, and ultimately, erosion or corrosion attack.

- Rectangular ductwork (typically observed in gas distribution manifolds and breeching for some systems) is subject more to nonuniform gas distribution than circular ductwork, causing associated variations in performance and attendant problems as described in the preceding sections. The use of turning vanes (gas flow distribution baffles) in rectangular ductwork is beneficial, though not always a complete solution.

- Bends, expansions, and contractions in duct runs also contribute to nonuniform gas flow and attendant variations in performance and subsequent problems.

° Stack. Similar to the ductwork, the stack is also a fixed subsystem of every configuration depicted in Figure 5.3-1. Moreover, because the stack occupies the tail-end of the gas handling and treatment equipment area, it is always the subsystem affected by a simple or cascading problem sequence rather than the triggering or initiating event. Much of the foregoing discussion on outlet ductwork also applies to the stack. A consideration unique to the stack is due to its dimensions and position in the gas circuit. Typically, stacks rise very high above grade. Heights vary from 200 ft to 1200 ft. Present-day stack height has been somewhat standardized by the "Good Engineering Practice" of the June 1979 NSPS (see Section 2.1.1.2) specifying credit for 2.5 times the source or tallest adjacent structure (i.e., roughly equivalent to 500 to 600 ft above grade). Added to this consideration is the stack's tail-end position in the gas circuit. Unique problems associated with these considerations are radiative heat loss in the discharge ductwork and stack base which can cause downstream dew point corrosion to the top portion of the stack, even if the required degree of reheat is being achieved. Concurrent considerations associated with this concern are plume visibility, plume rise, and pollutant dispersion. Dew point corrosion to the top portion of the stack is compounded by the inability to inspect it during routine operation, maintenance, or scheduled maintenance.

° Damper. As indicated in Figure 5.3-1, dampers are not shown as a separate subsystem. Instead, they are associated with the operation of the subsystems of ductwork, fans, scrubbers/absorbers, and reheaters. Dampers are used to regulate the flow of flue gas through these subsystems through control and isolation functions. These functions are critical to the proper

operation and performance of these subsystems. Damper malfunctions can be either a triggering or terminating event in a simple or cascading problem sequence. Dampers in the inlet or outlet ductwork are sensitive to the performance of upstream particulate controls or SO_2 absorbers. Degradation in performance can result in accumulation of solids (fly ash, SO_2 reactants and products) on damper drives and seals, causing damper regulation problems with associated gas control and leakage problems. Gas control problems include regulation of the fan, scrubber/absorber, and bypass and hot air injection reheaters. Leakage problems include gas bypass for scrubbers/absorbers during low load or maintenance situations. Gas flow regulation problems can cascade into performance degradation for the subsystems being served through low and high gas flows, as described in the preceding sections on the various subsystems in the gas handling and treatment equipment area. Isolation problems can prevent timely inspection and preventative maintenance, which can ultimately manifest itself in major unscheduled maintenance. Dampers in the absorber discharge are subject to the harshest operating environment. Corrosion attack commonly occurs through entrainment carryover of solids and the collection of corrosive condensate (the solids carryover deposit, forming convenient host sites for the collection and buildup of corrosive condensate, leading to pitting corrosion of the surface material). Entrainment carryover generally occurs as a result of poor mist eliminator performance, which can be caused by poor absorber performance, which in turn can be caused by poor scrubber performance.

5.3.1.2 Reagent Preparation and Feed

The reagent preparation and feed equipment area is described in Section 2.4.2 (Existing Design Configurations). As is the case for the gas handling and treatment equipment area discussed in the preceding section, the subsystems contained in the reagent preparation and feed area can be arranged in a variety of configurations. However, unlike the gas handling and treatment equipment area, the number of permutations are limited. This is a result of process considerations, which represent the primary determinants in the selection of a subsystem configuration. In effect, there are two basic configurations now in use--one for lime slurry processes and one for limestone slurry processes.

These configurations differ because in the former, a more reactive and pre-prepared (calcined) chemical additive--lime--is used, requiring special handling and preparation considerations. In the latter, a less reactive chemical additive--limestone--is used, requiring less sophisticated handling and preparation techniques. A simplified block diagram of these configurations is presented in Figure 5.3-2.

Figure 5.3-2 defines two basic configurations comprised of the subsystems of receiving, conveying, bulk storage, slurry preparation (milling and slaking), and slurry distribution (product slurry storage, product slurry feed, and slurry recirculation). Of these subsystems, only conveying, bulk storage, and slurry preparation show a variance.

The cause-and-effect problem sequences which occur in the reagent preparation and feed equipment area are described below by subsystem in terms of the triggering event and the terminating event for both simple and cascading varieties.

- Receiving. Receiving and off-loading of reagent supplies to the plant can occur by river barge, rail car, and/or road truck. Most modern-day plants incorporate the flexibility of receiving supplies through more than one mode of transportation (in many cases, all three). Factors which govern this selection include geographical location, existing infrastructure, source of supply, and mode of coal transportation. Although receiving and off-loading are not considered sophisticated or specialized functions of the FGD process, a number of simple problem sequences can occur.

  - Weather conditions can interrupt the supply of reagent to the plant, especially river barge deliveries during severe winter weather (freezing conditions). Extended interruptions can eventually affect FGD service time, especially if plant supplies are low. This is more of a concern for lime than limestone because on-site bulk storage is limited to storage silos and bins whereas limestone bulk storage can be accommodated through large, unprotected storage piles (typical limestone storage pile supplies 30 days of operation).

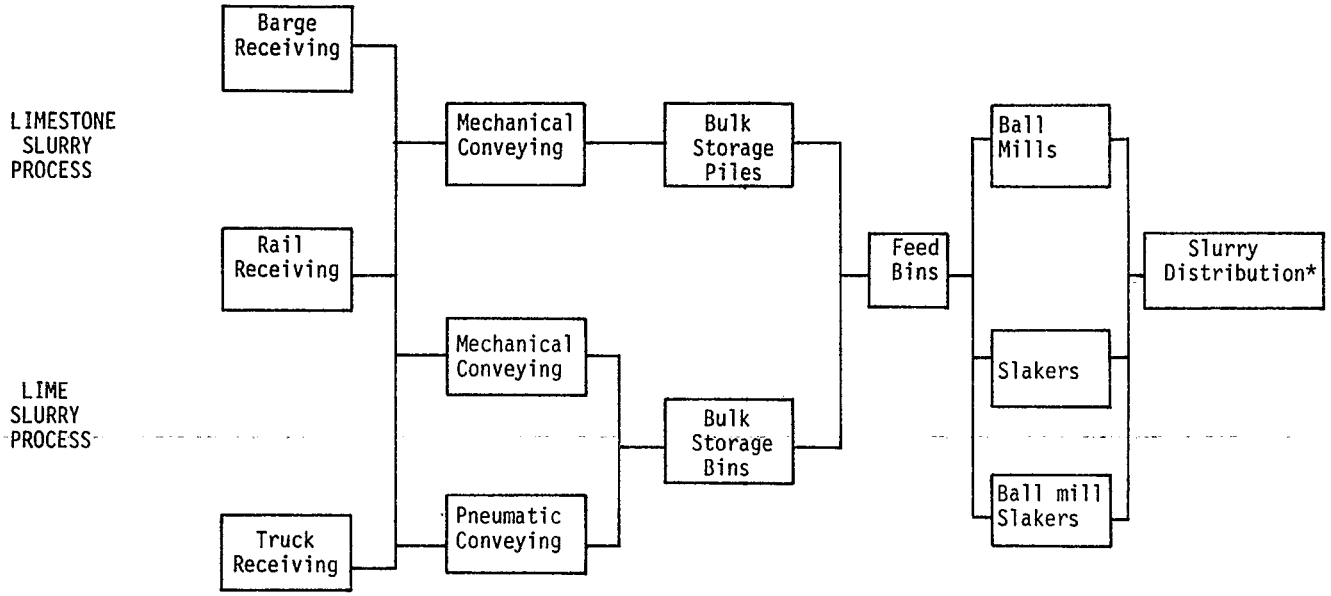

*Slurry distribution includes product slurry storage, product slurry feed, and slurry recirculation.

Figure 5.3-2. Reagent preparation and feed subsystem arrangements.

- Weather conditions also can hamper or interrupt unloading operations because of frozen shipments, especially on rail cars.

° Conveying. Conveying equipment includes covered belt conveyors, screw conveyors, and pneumatic conveyors. The former two are of the "simple" mechanical variety; the latter uses compressed air. Limestone is normally conveyed to storage by mechanical means; lime by pneumatic means. Interruption of conveying from receiving to bulk storage or from bulk storage to slurry preparation can obviously interrupt FGD operation. However, a more subtle problem occurs where conveying equipment is shared (in order to save on capital costs). This situation exists at a number of coal-fired plants which use limestone slurry FGD. The coal and limestone supplies share a considerable portion of the belt conveying equipment. Contamination of supplies invariably occurs. Contamination of the limestone supply by coal fines may plug or erode feed equipment in the slurry circuit. As a consequence, there is added potential for absorber plugging or scaling.

° Bulk Storage. Open storage piles are used for bulk limestone storage and storage silos and bins are used for bulk lime storage. Open storage piles are subject to problems of ambient environmental conditions in the form of freezing and precipitation (dissolution of reagent by water). Silos and bins are a more expensive means of storage. They can periodically experience flow problems such as jamming or plugging. Lime storage bins must be weatherproofed and airtight to prevent absorption of water and carbon dioxide from the atmosphere. Lime storage is much more limited in supply capacity than limestone (typically 100 tons per storage bin). Lime storage also is generally served by more complex conveying equipment than limestone. These two factors make lime storage a more difficult proposition than limestone. Supply interruptions or conveyor failures can impact FGD operation relatively quickly, possibly causing a curtailment or interruption of operation. Conveyor failures can occur through the loss of a compressor, screw conveyor, or bucket elevator.

° Feed Bins. Feed bins receive the reagent from storage (piles or silos) and transfer the material to slurry preparation. Feed bins are similar to storage bins and therefore are subject to the same types of problems. A feed bin is a somewhat more complex operation, however, due to the presence of dust collecting equipment, air

locks, and feeder. The feeder feeds and meters the flow of reagent into the ball mill or slaker. Failure of the bin or ancillary equipment can cause slurry interruption and curtailment of FGD operation. Improper operation can impact the operation of reagent preparation equipment, causing variations in slurry product quality and subsequent degradation in SO_2 removal and absorber reliability (plugging, scaling of internals).

° Reagent Preparation. Limestone slurry is typically prepared by a ball mill (Section 2.4.2.7) and lime slurry is typically prepared by a slaker (Section 2.4.7.8). A limited number of lime slurry FGD systems use ball mill slakers to improve slurry product quality (slurry particle size). Where the absorber is considered the central operation of the gas handling and treatment equipment area, so the ball mill or slaker is considered the central operation of the reagent preparation and feed equipment area. The ball mill produces a product quality of typically 90 percent minus 200 mesh (design specifications can range from as low as 70 percent minus 200 mesh to as high as 95 percent minus 325 mesh). The slaker produces a product quality of all hydrated particles of one micron or less in size. A number of problem sequences associated with these subsystems are noted below.

- Variations in specified chemical and physical properties of the bulk reagent delivered to the plant can cause degradation in ball mill or slaker performance. Physical characteristics of limestone grindability and lime porosity may limit desired particle size, available particle surface area, and reactivity of final slurry product, which in turn can affect absorber SO_2 removal and reliability (plugging, scaling). Chemical characteristics of active alkali components ($CaCO_3$, CaO, $MgCO_3$, MgO) and impurities (silica) will affect SO_2 removal and mechanical reliability. With respect to the former, insufficient active alkali can limit the amount of alkalinity available in the slurry liquor to absorb SO_2. With respect to the latter, impurities in the form of silica, dirt, and flint can result in an extremely abrasive slurry product which can erode absorber internals, slurry spray nozzles, and slurry storage and feed equipment. Degradation in reagent quality will also increase the quantity of bulk material consumed, resulting in a more costly and more solid waste-producing operation.

- Ball mill performance is a direct function of the quality of the milling surface. The initial charge of balls in the mill is eroded away over time with use. Degradation in slurry product quality will result. Periodic recharging is required. Degradation in bulk limestone quality (impurities) may also accelerate mill surface wear and subsequent product slurry quality.

- Slaker performance is a direct function of residence time and temperature of the slaking operation. The mechanism by which hydration reactions are carried to completion require the heat of reaction to convert water into steam at the surface of the lime pebble. Steam expansion plus slurry agitation causes reaction products to be carried away from the surface of the pebbles as they form, thereby exposing fresh surfaces for further reaction and improving reagent utilization. Depending on slaker type (Section 2.4.2.8), retention time and temperatures range from 5 to 30 minutes and 167 to 194°F, respectively. Insufficient residence time and temperatures cause inefficient particle dispersion, rapid crystal growth, "blinding", localized overheating, and lime loss through hard scale formation in the tank. These effects in turn result in a poor quality slurry product, resulting in possible degradation of SO_2 removal across the absorber, increased lime consumption, and scaling and plugging within the absorber tower.

- The quality of the lime slurry product is highly dependent on the quality of the slaking water used. High concentrations of SO_2 products and reactants and anions such as carbonate ($CO_3^=$), and bicarbonate (HCO_3^-) will precipitate in the presence of calcium and cause scaling. Similarly, high concentrations of metal cations that will precipitate as hydroxide salts are objectionable. High chloride concentrations do not appear to be detrimental to the slaking process; however, high concentrations of chlorides may increase the degree of chloride corrosion. The result of using a poor quality slaking water is a reduction in the slaking rate and the production of large, dense particles of partially hydrated lime. The slurry is more abrasive, thereby accelerating erosion attack.

- The quality of lime slurry dilution water is not as critical as slaking water, provided that complete slaking of the lime slurry is accomplished using high quality fresh water. Dilution with recycled water should be satisfactory and only minimal use of fresh water as a blend should be required. If recycled water is used for slaking, recycled water for dilution will react with dissolved anionic species and the resulting compounds will precipitate on the suspended lime particles, preventing dissolution and reaction ("blinding"). This in turn will result in a degradation of performance as noted above. This problem arises because the pH of slaked lime slurry is very high (in the range of 11 to 12).

- The quality of the limestone slurry product is largely independent of the quality of milling and dilution water used. Limestone differs from lime in this regard in that it is much less reactive (i.e., much lower pH) and, therefore, dissolves less readily in water. Thus, in order to get sufficient alkalinity into the slurry liquor, a ball mill is needed to pulverize the limestone to finely ground particles and expose sufficient surface area to generate reactivity. The pulverization operation supercedes any effect the quality of water may have on dissolution. Recycled water, cooling tower blowdown, and waste water from other operations can substitute for fresh water without significant impact on limestone slurry product quality, absorber performance, and the performance of other subsystems.

° Slurry Distribution. The slurry distribution subsystem includes slurry product storage, slurry feed to the absorber, and slurry recirculation within the absorber loop. The slurry distribution network is where the reagent preparation and feed equipment area interfaces with the gas handling and treatment equipment area. As such, any problem sequences which originate or cascade in the slurry distribution subsystem are eventually manifested in the performance of the gas handling and treatment equipment area. A number of these problem sequences have been described in the preceding sections for the upstream subsystems in the reagent preparation and feed equipment area. A number of additional sequences peculiar to the slurry distribution subsystem are identified below.

- Lime slurry product storage not only provides surge volume between the slaker and absorber, but also allows time for the slurry to "stabilize". Addition of dilution water to a concentrated slurry causes a series of chemical reactions between the lime and dissolved minerals in the water such as the alkaline earth salts (Group IIA metal oxides), chlorides, sulfates, and phosphates. These reactions, which are typically completed in less than 15 minutes, cause the formation of hard, insoluble, crystalline solids. The primary function of slurry storage is to hold freshly diluted slurry until these scale-forming reactions are completed. Once completed, the trapped suspended solids are allowed to settle out of the slurry before being introduced along with the slurry to the FGD system. In a well-designed system, a large storage tank is used so that most of the scale compounds are present as a suspension. As additional scale compounds are formed, they adhere to the suspended crystals, which increase in size and eventually settle to the bottom of the tank. The slurry is then said to be stabilized. If no more water is added and the slurry does not absorb significant quantities of CO_2 from the air, no further scale reactions occur. If insufficient residence time is provided in the lime slurry product tank, or the addition of dilution water is uncontrolled, or too much residence time in the lime slurry product tank is provided (increasing CO_2 uptake from the air), or if the suspended solids are not allowed to settle, the "unstabilized" slurry contributes to the erosion of downstream transfer pumps and piping, decreased SO_2 removal in the absorber, plugging and scale formation in the absorber, and possible downstream effects to the mist eliminator, reheater, ID fans, ductwork, and stack.

- Limestone slurry product storage provides surge capacity within the slurry distribution subsystem in order to permit disruptions in the operation of the grinding system without affecting the operation of the absorber. Limestone slurry product storage also provides residence time for dissolution and generation of sufficient slurry liquor alkalinity. Unlike lime, limestone exhibits a much less reactive and more buffered process chemistry. Accounting for process surge capacity and limestone dissolution, limestone slurry storage tanks provide a residence time of a minimum of

8 hours to a maximum of 40 hours. If residence time is below the minimum, or if the fresh limestone slurry "short-circuits"* the product slurry storage tank, the limestone slurry feed to the absorber may be insufficient in slurry liquor alkalinity, causing degradation of SO_2 removal across the absorber, increased limestone consumption, plugging and scaling in the absorber, and cascading downstream effects in the mist eliminator, reheater, ID fan, ductwork, and stack.

- All slurry distribution tanks must be sufficiently agitated to keep the solids in suspension. In the event of insufficient agitation or agitator failure, solids will settle out and plug up discharge lines, pump intakes, and valves.

- Slurry recirculation tanks receive product slurry from the reagent preparation subsystem, spent slurry from the absorber ("downcomer"), and, in some cases, makeup water (process recycle or fresh). The slurry recirculation tank fulfills a number of mechanical and chemical functions in the process. In the way of mechanical functions, the recirculation tank provides surge capacity within the system to balance the operation of the reagent preparation and feed, gas handling and treatment, and waste solids handling and disposal equipment areas. As the nexus of these equipment areas, the recirculation tank represents the logical point to monitor and control process chemistry. The process chemistry parameters monitored include slurry pH and percent solids. The process chemistry variables of importance include solid phase residence time, liquor phase residence time, lime/limestone dissolution, crystal precipitation, particle size, relative saturation, percent oxidation, individual cation and anionic concentrations, and liquid phase alkalinity. Thus, the complexity of the functions of the recirculation tanks make it both extremely important and extremely sensitive to problem sequences within the entire process. A number of considerations peculiar to the recirculation tank are enumerated below.

*Short circuiting is the inability of the slurry to use the entire residence time provided by the tank due to the positioning of the inlet and outlet feed streams or insufficient backmixing.

(1) Slurry residence times of 8 to 15 minutes are typical for lime/limestone systems. All other factors being equal, the lower range suffices for lime slurry and the higher range suffices for limestone (due to chemical reactivity considerations). An undersized recirculation tank can impair the mechanical and chemical aspects of process operation. Namely, the inability to "surge", insufficient slurry alkalinity to remove SO_2 in the absorber, tower scaling and plugging, high reagent consumption and increased solid waste volumes.

(2) Improper mixing in the recirculation tank can short circuit the available residence time and affect the process chemistry which in turn can cause reduced SO_2 removal across the absorber, scaling and plugging in the absorber, increased reagent consumption, and increased solid waste production. Improper mixing can occur through insufficient residence time, tank geometry, arrangement of reed and discharge streams, insufficient agitation, and position of afitators (top entry preferred to side entry).

(3) Open external tanks are subject to debris falling into the tank, which can clog up pump intakes, feed lines, and spray nozzles, and cause inefficiency of operation and/or component malfunctions. Open tanks also emit slight corrosive vapors which can eventually rust or corrode the undersides of equipment directly above, most notably absorbers.

(4) Internal tanks provide limited access for inspection, operation, and maintenance. This can result in the lack of proper attention or early detection of minor operating problems which can compound into major problems (noted above). Noteable examples are agitator operation (motor, shaft, and blade assembly integrity and lubrication), proper liquid level, and corrosion of internals and undersides of equipment directly above.

(5) Cylindrical tanks contain superior mixing characteristics to rectangular tanks which have a higher potential for short circuiting and localized poor mixing. The impacts of

this condition on process performance are noted above.

5.3.1.3 Waste Solids Handling and Disposal. The waste solids handling and disposal equipment area is described in Section 2.4.2 (Existing Design Configurations). Similar to the discussion for the previous two equipment areas, the subsystems contained in the solids handling and disposal equipment area can be arranged in a variety of configurations. For this particular equipment area, a large number of permutations are possible. Figure 5.3-3 presents a summary of the various configurations used in commercial lime/limestone slurry FGD systems. Figure 5.3-3 is organized according to the solid waste treatment method used. As indicated, three major types of treatment methods are possible--untreated, physical treatment, and chemical treatment. Untreated is self-explanatory. The recirculation slurry bleed is handled and disposed of without the benefit of an external treatment step. Physical treatment involves the use of forced oxidation to treat the waste product. Physical treatment is somewhat of a misnomer in this context because forced oxidation involves the conversion of the unoxidized sulfite to sulfate, generating a gypsum-bearing waste product. Chemical treatment involves the use of chemical additives to treat the waste product. One form of chemical treatment is stabilization, which involves the addition of chemically non-reactive materials; the other is fixation, which involves the addition of chemically reactive materials. All the subsystem configurations described in Figure 5.3-3 are applicable irrespective of process, application, and duty considerations.

The cause-and-effect problem sequences which occur in the waste solids handling and disposal equipment area are described below by subsystem in terms of the triggering and terminating events for both simple and cascading varieties.

- Slurry bleed. Purging spent slurry from the absorber slurry recirculation loop can be accomplished by bleeding directly from the slurry recirculation line or the

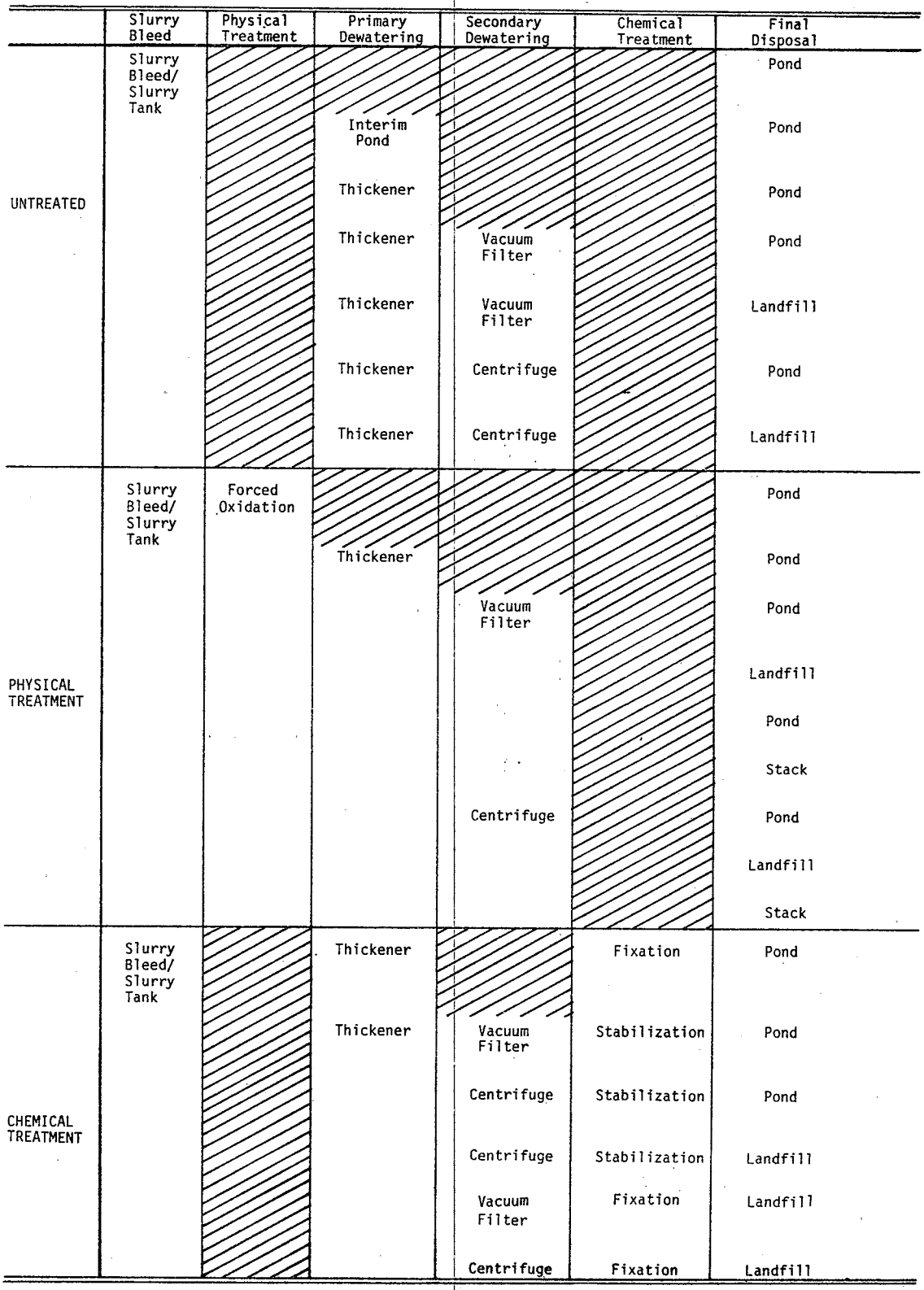

Figure 5.3-3. Waste solids handling and disposal subsystem arrangement.

slurry recirculation tank. In the former, the bleed line extends directly off the recirculation line on the discharge side of the recirculation pump(s) feeding the absorber. This operation is actuated by a control valve. In the latter, spent slurry is taken directly out of the bottom of the slurry recirculation tank through the use of a separate pump and discharge line. Both operations are controlled by monitoring physical and chemical parameters in the recirculation tank, namely--slurry liquid level, slurry pH, and slurry percent solids. The bleed stream method is more prevalent due to favorable costs; however, bleeding from the tank offers superior process control and reliability. A number of simple and cascading problem sequences are identified below:

- Bleeding spent slurry is controlled primarily by monitoring the solids content of the slurry in the recirculation tank to a specified level. The solids control level is typically 10 percent, although levels as low as 5 percent and as high as 15 percent are practiced. In an unsteady-state situation, if the solids level is allowed to fall below the set point (i.e., the solids level of the recirculation slurry is maintained below design), absorber process chemistry may be upset and downstream solids dewatering operations may be overloaded. Absorber process chemistry upsets can occur through depletion of slurry alkalinity or depletion of slurry seed crystals. In the former, SO_2 removal declines; in the latter, the precipitation of SO_2 reaction products declines and uncontrolled scaling occurs in the absorber. Downstream dewatering operations are sized according to the mass inlet loading of solids. Continuation of unsteady-state operations above this design value can result in insufficient clarification of recovered water or subsequent overloading of downstream secondary dewatering equipment. On the other hand, if the solids level is allowed to rise above the set point (i.e., the solids level of the recirculation slurry is maintained above design), absorber operation can be affected through erosion of slurry pumps, valves, and piping and plugging and scaling of tower internals. Downstream operations are also affected in that insufficient solids loading may create too much water in the solid waste product for proper processing or dewatering.

- Bleeding spent slurry off the recirculation line limits the amount of redundancy available to overcome component failure. (Generally, the absorber is served by one main slurry recirculation line which manifolds into several recirculation pumps.) A failure in the control valve can affect absorber performance (as noted above) and upset downstream operations (as noted above).

- Bleeding spent slurry directly out of the recirculation tank offers more flexibility in the event of a component failure. Redundancy can be provided through spare pumps and valves, which can be placed quickly into operation without affecting absorber and downstream dewatering equipment performance. In addition, a failure here (i.e., recirculation tank bleed line) would have little or no short-term effect to an absorber recirculation feed because of greater surge capability of tank versus bleed line.

° Forced Oxidation. Forced oxidation involves the conversion of sulfite to sulfate to produce a gypsum-bearing waste product. Typically, forced oxidation is grouped with the chemical methods of fixation and stabilization. However, forced oxidation is treated separately here because of its position in the process flow sheet. (Forced oxidation is accomplished in the slurry recirculation tank before dewatering, whereas stabilization and fixation are accomplished after dewatering.) Forced oxidation is used in selective applications -- exclusively limestone slurry processes and primarily low sulfur coal applications (due to the high degree of natural oxidation which occurs in these systems). Forced oxidation is accomplished by an air compressor and sparger pipe or ring situated in the base of the slurry recirculation tank. A number of problem sequences are noted below:

- Process chemistry upsets can reduce the efficiency of converting sulfite to sulfate and therefore the amount of gypsum produced. One key variable is slurry pH. Oxidation efficiency increases as slurry pH is reduced (i.e., becomes more acidic). In the limestone slurry process, this means any pH approaching 5 or below. At high pH levels (any pH approaching 6 or above), more dissolved sulfite precipitates out as a solid phase salt and sulfite oxidation efficiency drops correspondingly (i.e., sulfite oxidation occurs in the aqueous phase only; oxidation of the solid sulfite is extremely

limited). This can have a number of ramifications on process operation. Solids dewatering becomes increasingly more difficult (calcium sulfite crystals are more difficult to dewater because of crystalline properties). Solid waste disposal increases in volume and solid waste quality declines. Desupersaturating the process liquor of SO_2 reaction products declines, increasing the likelihood of scaling in the absorber.

- Another key process chemistry variable is slurry solids. If an insufficient amount of seed crystals is not maintained in the slurry recirculation loop, gypsum desupersaturation becomes impaired, contributing to the likelihood of scaling in the absorber.

- A compressor failure or insufficient agitation in the slurry recirculation tank can impair sulfite oxidation conversion efficiency, with consequences noted above.

- Solids buildup on the forced oxidation sparger holes at wet/dry interface can impair oxidation efficiency, with consequences noted above.

° Primary Dewatering. Primary dewatering is accomplished by a thickener or interim pond. Current use emphasizes the former. Interim ponds, which were used extensively in early FGD systems, have been largely abandoned due to inefficiency of clarification of process liquor coupled with a greater emphasis on closed water loop operation (most of these applications were solar evaporation ponds [located in arid regions of the southwest] used in once-through, open water loop systems). The thickener is an extremely problem-sensitive operation because of its central role in balancing the chemistry and flow of the FGD process. A number of notable problem sequences are identified below:

- Process chemistry upsets can alter the flow and composition of the spent slurry stream, affecting solids dewatering (solids content of underflow) and clarification (residual solids content in overflow). Subsequent impacts include mist eliminator cleanliness, increased makeup water consumption (pump seals, mist eliminator wash, slurry precipitation, slurry dilution), increased solid waste production, ineffectual secondary solids dewatering, inefficient chemical treatment, and final disposal difficulties.

- Inefficient thickening due to insufficient residence time for settling out SO_2 reaction products can contribute to the consequences noted above. Key design factors are liquid surface area (thickener diameter) and liquid level (thickener height).

- Inefficient secondary dewatering resulting in high residual solids in filtrate or centrate recycled back to the thickener can overload thickener operation.

- Inefficient thickening due to an insufficiently sloped bottom cone can impair sludge blanket formation and solids content of underflow.

- Rake drive speed variations (or failure) on the low or high side can cause clogging of solids underflow stream or high turbulence in thickener with insufficient clarification of overflow stream.

° Secondary Dewatering. Secondary dewatering is accomplished by vacuum filter or centrifuge. Current use emphasizes the former. The problem sequences identified in the foregoing for the thickener also apply to secondary dewatering. A number of special considerations which differentiate secondary and primary dewatering are worth noting. First, the vacuum filter (or centrifuge) is mechanically a more complex operation. Therefore, there is a greater risk of failure or improper operation. Second, however, size and cost factors permit the use of spare vacuum filters which compensate for the higher degree of risk.

° Physical/Chemical Treatment. Physical/chemical treatment involves the use of additives to stabilize or "fixate" the solid wastes prior to final disposal. Stabilization involves no significant chemical reactions between the wastes and the additive; the additives provide physical stability primarily by increasing the solids content of the wastes. Fixation involves pozzolanic (cementitious) chemical reactions between the wastes and the additives (e.g., lime, fly ash). Some western coal ashes are so alkaline that addition of lime is not necessary for fixation. Fixated material is more often subsequently used for off-site landfill where product quality and secondary environmental impacts are of primary concern. The problem sequences in the upstream subsystems that can cascade to the physical/chemical treatment subsystem are noted above. Other notable problem sequences include:

- Insufficient curing time prior to disposal will inhibit the material's ability to set up properly in the disposal site, resulting in variations in landfill quality and increased tendency for secondary environmental affects associated with permeation or runoff of dissolved chemical components.

- Excessive curing time prior to disposal inhibits the handling and transportation of the material to the final disposal site. The material can set up in the curing pile or the pipe line delivering the material to the disposal site.

- Variations in monitoring of additive chemicals or quality control (such as often exhibited in the transition from startup to sustained operation) can result in stratified variations of final disposal material. This can limit the end use of the disposal site, especially in a structural fill.

° Final Disposal. Three major types of final disposal are available: pond, landfill, and stacking. Stacking (i.e., systematic piling of waste material above ground level) is applicable only for forced oxidation, secondary dewatering, and gypsum waste-producing systems. To date, no such systems are in commercial operation. Of the pond and landfill methods available, a variety of types are used in accordance with the considerations of off-site/on-site, surface/subterranean, and minefill/structural fill. A number of problem sequences associated with the final disposal operation are identified above. A problem commonly encountered with lime/limestone slurry systems is insufficient capacity of the final disposal site. Conditions which contribute to this (in descending order of importance) include open water loop (purging) operation (affecting pond capacity), inefficient dewatering, high reagent consumption, high SO_2 loadings (versus design), and underdesign of disposal capacity requirements.

5.3.2 Corrective Actions

Following problem identification and problem diagnosis, corrective measures are then taken to rectify the problem and restore the FGD process to steady-state operating conditions. As noted previously in this section, the corrective action sequence is, in many cases, a more involved procedure than a simple reversal of the problem sequence. The corrective action sequence

generally begins by correcting the initiating or triggering event. The subsystems affected in the simple or cascading sequence are restored to previous operating status. The subsystem manifesting the symptom or terminating event is then monitored to verify resumption of steady-state operation.

Corrective sequences are described in the following sections for the problem sequences described in Section 5.3.1 (Problem Diagnosis). The approach adopted for the presentation of this material is to describe remedial actions for those subsystems that are vital and unique to the operation of lime/limestone FGD systems. This information is organized according to the equipment areas and subsystems described in Section 5.3.1 and defined in Section 2.4.2 (Existing Design Configurations).

5.3.2.1 Gas Handling and Treatment. All of the subsystems contained in the gas handling and treatment area are considered both vital and unique to the operation of lime/limestone FGD systems. Accordingly, corrective actions are described below for each.

- Fan. Forced draft fans tend to have a more pronounced cascading influence on FGD operation than ID fans due to their position in the process flow. The triggering event in fan-related problems is loss of upstream particulate collection efficiency. Accordingly, the following corrective sequence is instituted:

  (1) Take fan out of service (which usually involves taking the absorber module out of service also).

  (2) Remove deposits from internals and rotor.

  (3) Repair (weld or patch) or replace failed components.

  (4) Rebalance fan rotor, inspect and lubricate bearings and motor.

  (5) Determine particulate collection efficiency of upstream device via inlet/outlet measurements (EPA Method 5) to determine particle loading, particle size distribution, and particle resistivity.

(6) Correct particulate collection device through mechanical modifications, flue gas conditioning, or possibly modifying characteristics of coal fired in boiler (last resort).

(7) Startup fan and monitor performance via differential pressure readings across the fan in accordance with fan performance curves provided by the manufacturer.

° Scrubber. Scrubbers include venturis for particulate/SO_2 control and presaturators and quenchers for physical conditioning of the gas stream prior to absorption. Venturi scrubbers may achieve insufficient particulate and SO_2 removal. The following corrective measures may be instituted:

(1) Increase gas-side pressure drop across the scrubber through the variable-throat adjustment (obviously, this first step is not possible for fixed-throat designs).

(2) Increase scrubber L/G ratio by increasing slurry flow rate through increased pumping (increase output of variable-drive pumps or bring installed spare pumps into service).

(3) Measure particulate and/or SO_2 removal across scrubber before and after throat and/or L/G adjustments (EPA Method 5).

(4) If adjustments are insufficient, take scrubber out of service.

(5) Remove deposits from wet/dry interface areas.

(6) Remove deposits from slurry spray nozzles.

(7) Check/replace slurry spray nozzles.

(8) Modify slurry spray pattern through nozzle and piping modifications (optional, if problem persists).

(9) Return scrubber to service and monitor performance by SO_2, particulate, temperature, pressure, and flow differentials across tower.

° Absorber. Absorbers may encounter solids deposition in the form of plugging or scaling of internals. Although plugging and scaling represent different chemical

phenomena, they cannot be readily distinguished by conventional performance monitoring. Even visual inspection cannot distinguish one from the other. Chemical analyses of the deposits (and slurry liquor) are generally needed. Solids deposition is also a problem for open spray tower designs (although somewhat less debilitating), as solids can build up at wet/dry interface areas, slurry spray headers, slurry spray nozzles, and various internal supports. Solids deposition is generally remedied through the following corrective sequence:

(1) Reduce slurry pH (acidify) by small incremental amounts (0.1 pH units).

(2) Monitor gas-side pressure drop and SO_2 removal while reducing slurry pH. (The time frame over which this action is taken will vary according to the system and the situation. However, we recommend that several days of continuous steady-state operation be given to this activity. A reduction in pressure drop denotes solids deposition due to soft scale caused by calcium sulfite/calcium carbonate. Lowering the pH causes the solids to dissolve into the slurry liquor. If pressure drop is not alleviated and SO_2 removal drops significantly during pH reduction, solids deposits may form consisting most likely of gypsum and possibly fly ash.

(3) Take absorber out of service (if pressure drop or SO_2 removal problems persist).

(4) Remove solids from absorber internals (including wet/dry interface, spray headers, spray nozzles, supports)

(5) Check/replace slurry spray nozzles.

(6) Check/replace slurry spray headers.

(7) Modify slurry spray pattern through nozzle and piping modifications (optional, if problem persists).

(8) Return absorber to service and monitor performance by measuring SO_2 removal and pressure drop across the tower.

- Mist Eliminator. Mist eliminators are prone to solids deposition on the blades and vanes. Solid deposits can occur due to plugging or scaling ("fouling"). As noted previously, the mist eliminator is a specialized operation within the absorber. Therefore, the mist eliminator is extremely sensitive to the mechanical and chemical operating aspects of the absorber. Mist eliminator fouling is generally remedied by the following corrective sequence:

  (1) Measure dissolved salts in mist eliminator wash water. If high in SO_2 products/reactants, increase amount of fresh makeup in wash.

  (2) Increase mist eliminator wash by increasing wash duration (preferred method), wash frequency (secondary preference), and wash rate (final preference). Changes in the mist eliminator wash rate should be carefully balanced against makeup water consumption and closed water loop operating requirements.

  (3) If mist eliminator pressure drop is not reduced, reduce absorber recirculation slurry pH incrementally, monitoring pressure drop and SO_2 removal (see preceding discussion on absorber).

  (4) If mist eliminator pressure drop is not reduced, take absorber out of service.

  (5) Remove deposits and conduct chemical analyses.

  (6) Inspect wash system nozzles, piping, and pump(s). Repair and replace where necessary.

  (7) Measure relative saturation (RS) of slurry. If RS is in critical range, adjust process chemistry.

  (8) Inspect mist eliminator blades for thermal stress and melting.

  (9) If accessible, inspect downstream components for solids carryover, condensate collection, and dew point and pitting corrosion.

  (10) Return absorber to service. Monitor gas-side pressure drop, gas flow rate, and wash water flow rate.

- Reheaters. Inline reheaters represent the lowest cost, most efficient, but most problem prone form of gas

reheat. For this reason, only corrective actions for this type of reheater are discussed here. Frequency of problems is due to the reheater's presence in the gas stream and its dependency on the performance of upstream subsystems. Major problems are solids deposition on the tube surfaces with subsequent corrosion/erosion attack to tube bundles. Reheater fouling is remedied by the following corrective actions.

(1) Monitor temperature differential of gas stream across reheater. If temperature differential is less than design or declining, check flow and temperature of heating medium. If below design, correct and monitor gas stream temperature differential.

(2) If temperature differential problem persists, investigate performance of soot blowers. Verify supply of soot blowing medium (steam or air) and delivery (lances). If failures are observed, correct and monitor temperature differential.

(3) If no soot blower problems are observed, monitor gas stream pressure drop across reheater. If pressure drop is greater than design, increase soot blowing frequency.

(4) If problem persists, remove reheater (including absorber) from service.

(5) Inspect reheater tubes for deposits. Remove manually.

(6) Inspect reheater tubes for failures (steam leaks), especially at welds and tube bends. Repair through spot welding. Replace tube bundles if leaks are extensive.

(7) Inspect tube bundles in immediate vicinity of failure to determine if other failures were triggered by initial failure. Spot weld or replace, if necessary.

(8) Inspect downstream subsystems for dew point corrosion attack. Repair and replace where necessary.

(9) Return reheater to service. Monitor gas-side temperature differential and pressure drop and heating medium flow and temperature.

- Ductwork. The outlet ductwork (on the discharge side of the absorber) is the most problem-prone portion of ductwork in the FGD system. This is due to service in saturated conditions and dependency on the performance of upstream subsystems. The most prevalent problem is corrosion. Corrective measures can be instituted in the following fashion:

  (1) Inspect the ductwork shell for pits and cracks.

  (2) Inspect internal liner or shell for corrosion attack (general or pitting) during outage opportunities.

  (3) Monitor emissions (stack) for SO_2, opacity, and acid rainout. If SO_2 measurements vary significantly below expectations or SO_2 measurements obtained upstream, air leakage into the ductwork and subsequent dilution may be occurring. If opacity increases or exceeds expectations or stack rainout is observed (low pH condensate in the vicinity of the stack), entrainment carryover may be occurring due to high flow rates and correspondingly high duct velocities.

  (4) If these problems persist, remove duct from service.

  (5) Inspect ductwork for pockets of condensate and any significant solids deposition. If observed, sample and analyze.

  (6) Inspect duct liner and shell. Patch repair where possible, replace sections where necessary.

  (7) Inspect upstream reheater (in-line tube bundles or mixing chamber) for failures and cleanliness of heat exchanger surfaces. Maintain and repair, where necessary.

  (8) If solids deposition or carryover to reheater are observed, inspect upstream mist eliminator for cleanliness and operability. Maintain and repair, where necessary.

  (9) If mist eliminator performance is suspect, evaluate operability (mist eliminator blade assembly, wash system) and inspect absorber for operability and performance.

(10) Return ductwork (and any upstream subsystems) to service. Monitor stack emissions and measure gas velocities at various load levels and operating conditions.

° Stack. The stack is very similar to outlet ductwork in terms of major problems and corrective actions. As noted previously, the stack requires special consideration because of its dimensions and location in the gas circuit. If a problem is suspected, a major unit outage is required to inspect the stack and stack flue, identify damage, and institute corrective measures. Moreover, if the stack flue liner is damaged, special application techniques and skills are needed for repairs. This is a very time consuming operation. In the event of a stack flue liner failure due to dew point corrosion attack, the following corrective action sequence is instituted:

(1) If dew point corrosion attack in the outlet ductwork is observed, similar damage to the flue liner is likely.

(2) Inspect flue liner during next scheduled unit outage.

(3) If flue liner is failing or has failed, schedule repairs during extended unit outage. If failure is severe, an immediate forced unit outage may be necessary.

(4) During outage, inspect upstream subsystems for proper operation and performance (see preceding discussion on absorber, mist eliminator, and reheater).

(5) During outage, conduct engineering analysis of liner failure determining (at a minimum): gas velocities and temperature profiles, radiative heat losses, necessity and amount of reheat, corrosivity, and acid dew point.

(6) Incorporate any design and operating changes in accordance with inspection and engineering analysis.

(7) Return unit to service.

° Damper. The inability of isolation dampers to effectively seal off the absorber tower during flue gas

bypass represents the major damper operating problem. Solids accumulation and corrosion are typically encountered. On the inlet side of the absorber, fly ash is generally the cause. On the discharge side of the absorber, entrainment carryover is generally the cause. As described in the preceding sections, upstream subsystem operation must be improved. Maintenance and repair to the damper itself involves cleaning and readjustment during a unit outage.

5.3.2.2 Reagent Preparation and Feed

The reagent preparation and feed equipment area contains two subsystems that are of vital concern to overall FGD system operation and performance. They are the reagent preparation and slurry distribution subsystems. These subsystems involve the operations of the ball mill for limestone and the slaker for lime as well as product slurry storage, product slurry feed, and slurry recirculation in the absorber. Although mechanical problems associated with the preparation and transfer of the product slurry to the absorber loop are frequently encountered, the problem of overriding concern is the reactivity of the product slurry. Insufficient reactivity will affect the operation of all downstream subsystems as well as carrying over into the gas handling and treatment equipment area and waste solids handling and disposal equipment area. These effects will include insufficient SO_2 removal in the absorber; scaling and plugging in the absorber; erosion of pumps, piping, valves, and tanks in the slurry distribution network; increased reagent consumption; and increased solid waste production. Using the quality of the product slurry as a gauge, corrective measures can be instituted to ensure adequate performance. These measures can be implemented for both the reagent preparation and slurry distribution subsystems per the following:

(1) Sample and measure the slurry at each stage in the preparation and distribution process. The slurry will be analyzed for reactivity per the following measurements: liquor pH, slurry solids, particle size, alkalinity, reaction products, dissolved salts, and inerts.

(2) If slurry reactivity is inadequate, determine quality of bulk reagent with respect to specified chemical and physical characteristics. If the quality of the current supply is determined to be inadequate, change supply.

(3) If bulk reagent supply is determined to be adequate, determine quality of preparation and dilution water per the following measurements: pH, carbonate, bicarbonate, sulfite, sulfate, chloride, and metal cations. If current supply is determined to be inadequate, change water supply by adding more fresh makeup or a filtering step.

(4) If water supply characteristics are determined to be adequate, inspect the ball mill or slaker. Typically, ball mills and slakers operate on a batch basis (e.g., 8 hours for every 24-hour operating day). Hence, there is sufficient opportunity to empty and inspect these subsystems without taking either them or the entire FGD system out of service.

(5) If ball mill milling surfaces are worn, take ball mill out of service and recharge balls.

(6) If slaker "surfaces" (paddles, agitators, rakes) are worn, take slaker out of service and replace.

(7) Return ball mill or slaker to service and monitor product quality (chemical reactivity).

(8) If slurry reactivity is still inadequate, determine residence times in each holdup tank.

(9) If residence times are inadequate, vary liquid levels (height), pumping rates, and/or operating schedules to increase residence times.

(10) If reactivity is still inadequate, determine sufficiency of backmixing and the possibility of short circuiting in the tanks. Determine adequacy of agitation and identify flow patterns in each tank. If insufficient, modify or change agitators and modify inlet/outlet feed stream configurations. (Product slurry and feed tanks may not require forced outage to complete modifications; however, slurry recirculation tank will because of its continuous mode of operation.) If required, "baffle" the tanks to improve agitation and backmixing. Baffles, which break up the circular motion of the slurry, should not be attached directly to the sides

and bottom of the tank because solid deposits will form behind them, decreasing the effective volume of the tank and hampering slurry agitation.

(11) Return tanks to service and monitor product quality (chemical reactivity).

5.3.2.3 Waste Solids Handling and Disposal

The waste solids handling and disposal equipment area contains one subsystem that is vital to overall FGD system operation and performance--primary dewatering. As noted in Section 5.3.1.3, primary solids dewatering typically is accomplished by a thickener. The thickener is an extremely problem-sensitive operation because of its central role in balancing the chemistry and flow of the FGD process. An index of the overall performance level of the thickener is the quality of the clarified water (overflow) recovered by the thickener and returned to the process. An overflow high in suspended solids or dissolved salts can have detrimental impacts on mist eliminator cleanliness, product slurry quality, and absorber SO_2 removal and reliability. Concurrently, an overflow of poor quality also indicates a poor quality underflow stream, which can cascade and affect the downstream subsystems of secondary dewatering, physical/chemical treatment, and final disposal. Accordingly, the following corrective actions can be taken to resolve problems or improve performance.

(1) Monitor the quality of the thickener overflow stream with respect to suspended solids (typically 50 to 100 ppm), dissolved salts (total weight), pH, and ionic concentrations of calcium, magnesium, sulfite, sulfate, carbonate, hydroxide, and chloride.

(2) If thickener overflow quality exceeds specifications, monitor inlet (feed) and underflow characteristics with respect to flow rate and solids content.

(3) If inlet feed stream exceeds design flow rate or solids content, the thickener may be "overloaded" (mass loading of solids exceeds design), resulting in insufficient clarification. Consequently, increase thickener

underflow pumping rate to increase solids discharge rate and restore steady-state operation.

(4) If increasing thickener underflow pumping rate does not resolve problem or is not possible, add a flocculant to improve settling characteristics (or increase rate of addition if a flocculant is already added). Flocculant addition should not exceed recommended concentration levels (typically 5 to 7 ppm).

(5) If thickener overflow quality is still determined to be inadequate, analyze chemistry of suspended solids and dissolved species. Determine level of excess (unreacted) reagent, sulfite/sulfate ratio, and fly ash. If reagent exceeds design excess, reduce stoichiometric ratio in absorber recirculation slurry. If sulfite/sulfate ratio exceeds design, investigate forced oxidation system (if present) and absorber slurry recirculation loop (slurry pH, recirculation tank residence time). If fly ash presence exceeds expectations, investigate the performance of the particulate collection device.

(6) If thickener underflow stream exceeds design flow rate or solids content (thickener overload), monitor performance of downstream secondary dewatering subsystem (if present). Secondary dewatering may in turn be overloaded, resulting in a poor quality filtrate or centrate returned to the thickener. This may in turn aggravate thickener problems. Increase secondary solids dewatering by activating installed spare (if present) as a temporary measure.

(7) If the solids content of the thickener underflow is below design, recycle underflow stream back to thickener to buildup solids inventory to proper level. If this measure proves inadequate, monitor chemistry of thickener feed stream to determine excess reagent level, sulfite/sulfate ratio, and fly ash. If necessary, adjust as described above.

(8) If thickener performance is still inadequate, take thickener out of service. Due to large liquid inventory, this will be a time-consuming process. Forced outage of FGD system may be avoided by temporarily bypassing thickener and going to an emergency pond or directly to disposal (if an on-site pond). Inspect and repair and replace any components (where needed). Attend closely to rake drive assembly, underflow line, and motor drive and gear assembly.

(9) During episodes of poor thickener performance, closely monitor gas-side pressure drop across the mist eliminator (solids deposition), product slurry reactivity, pump seals, secondary solids dewatering, chemical treatment, and final disposal.

(10) The physical/chemical treatment subsystem must be able to control additive feed rates in accordance with solid waste feed stream characteristics. This operation should be closely monitored during thickener upsets. This monitoring should be extended to the final disposal material to ensure proper curing and characteristics (permeability, compressive strength). This can be accomplished through periodic core sampling and analysis.

SECTION 6

MODEL O&M PLAN

This section highlights a model O&M plan for lime/limestone slurry FGD systems. The purpose of this section is to introduce the field inspector to the elements of an idealized O&M plan which the field inspector can use as a benchmark from which to evaluate actual FGD systems. Idealized, in this context, refers to practices that are determined to be "preferable" based upon their successful application in specific systems throughout the industry. To our knowledge, no one plan is currently in use that contains all of the elements discussed in this plan.

This section is a continuation of the material introduced in Section 2.5.3 (FGD O&M Practices) and Section 5.2.3 (O&M). This section addresses the operator utility's management and staff (Section 6.1) at both the corporate and plant levels. Operating and maintenance manuals are described (Section 6.2 and 6.3, respectively) complete with suggested outlines. Troubleshooting techniques (Section 6.4) are described in terms of an organized multiphase program. Spare parts requirements are described for inventories of shelf spares (Section 6.5). The work order system is described in terms of its importance for monitoring O&M response (Section 6.6). Computerized tracking is discussed as a necessary function to store, retrieve, and analyze the current and projected status of FGD performance (Section 6.7).

6.1 MANAGEMENT AND STAFF

The field inspector should be acquainted with two levels of management structure and staff organization that are prominent

elements of an operator utility's O&M plan for an FGD-equipped coal-fired unit. They are corporate level and plant level. Corporate level represents the upper management attention provided by the operator utility. Plant level represents the O&M attention provided by the operator utility. These levels are described below for the idealized O&M plan.

6.1.1 Corporate Organization

The environmental manager at the corporate level is generally responsible for all pollution control activities and issues for the plants within the operator utility's generating system. Typically, the environmental manager can occupy one of three positions at the corporate level: vice-president of environmental affairs, manager of environmental affairs, or principal engineer of environmental affairs. Generally, the higher the ranking of the environmental manager, the greater the operator utility's commitment to FGD O&M. Moreover, assigning this responsibility at the vice-presidential level can free up positions at the manager and principal engineer levels to concentrate on more specific pollution control-related matters, with FGD representing one specialty function.

6.1.2 Plant Organization and Training

The management structure and staff organization at the plant level is organized in a fashion parallel to the corporate management and structure level. The highest position at the plant level is the plant superintendent. Other positions in descending order are designated as assistant superintendent, operations manager, shift supervisor, shift engineer, foreman, technician, and support personnel. Similar to the corporate structure and organization, the higher the ranking of the air quality control system (AQCS) manager, the higher priority the operator utility assigns to FGD O&M. Moreover, assigning this level of responsibility at the superintendent level can free up positions at lower levels to

concentrate on FGD O&M. One approach being adopted by many operator utilities is to establish a completely separate AQCS staff that is organized and managed parallel to the "power-side" staff. This approach involves maintaining a separate AQCS O&M staff with its own separate job titles, functions, incentives, and promotional structure. FGD O&M can be assigned a separate function within this structure or embody the entire FGD responsibility in itself. Some of the functional concerns associated with these strategies are described below.

Personnel operating and servicing the FGD system must be familiar with the components of the FGD system, process theory, equipment limitations, and proper procedures for maintenance and repair.

For optimum performance, one person (the AQCS manager) should be responsible for the entire FGD system O&M program. All requests for major repair and/or investigation of abnormal operation should go through this individual for coordination of efforts. When repairs are completed, final reports also should be transmitted to the originating staff through the AQCS manager. Thus, the AQCS manager will be aware of all maintenance that has been performed, chronic or acute operating problems, and any work that is in progress. The manager, in consultation with the operation supervisors, also can arrange for and schedule all required maintenance. He/she can assign priority to repairs and order the necessary repair components, which sometimes can be received and checked out prior to installation. Such coordination does not eliminate the need for certain functions but it does avoid duplication of effort and helps to ensure an efficient operation.

The size, experience level, responsibilities, and training of the O&M staff are significant factors in FGD system performance. The number of support staff required for proper O&M of a FGD system is a function of unit size, design, and operating history. Staff requirements must be assessed periodically to

ensure that the right personnel are available for normal levels of maintenance. Additional staff will generally be needed for such activities as a major refurbishing of the FGD system. This additional staff may include plant personnel, outside (contract) hourly laborers, or contracted personnel from service companies or FGD equipment suppliers. In all cases, outside personnel should be supervised by experienced plant personnel. The services of purchasing personnel and computer analysts may also be needed. The coordinator should be responsible for final acceptance and approval of all repairs. Figure 6.1-1 presents the general concept and staff organizational diagram for a coordinated FGD system O&M program.

The supervisors and staffing of the absorber (including reagent preparation and storage) and waste solids disposal operations should be considered separately. The permanent assignment of key personnel to specific work areas will allow them to become completely familiar with the process equipment and its chemistry. As the operating personnel gain understanding of the system, they will be able to anticipate problems before FGD system operations become impaired. In addition to the normal complement of shift supervisors and equipment operators on the operating crew of each shift, certain specialists should be available to assist them. For example, a chemical engineer is a valuable resource during atypical operating conditions. A chemical laboratory technician should also be available to analyze the process chemistry in the event of suspected trouble. During normal operations, this technician can monitor routine system performance through sampling and testing and need not be dedicated full time to the FGD system.

The maintenance supervisors and staff for the FGD system must include personnel from a number of disciplines. Mechanics are needed for component repairs. Electricians are also needed, as well as instrument technicians familiar with the system.

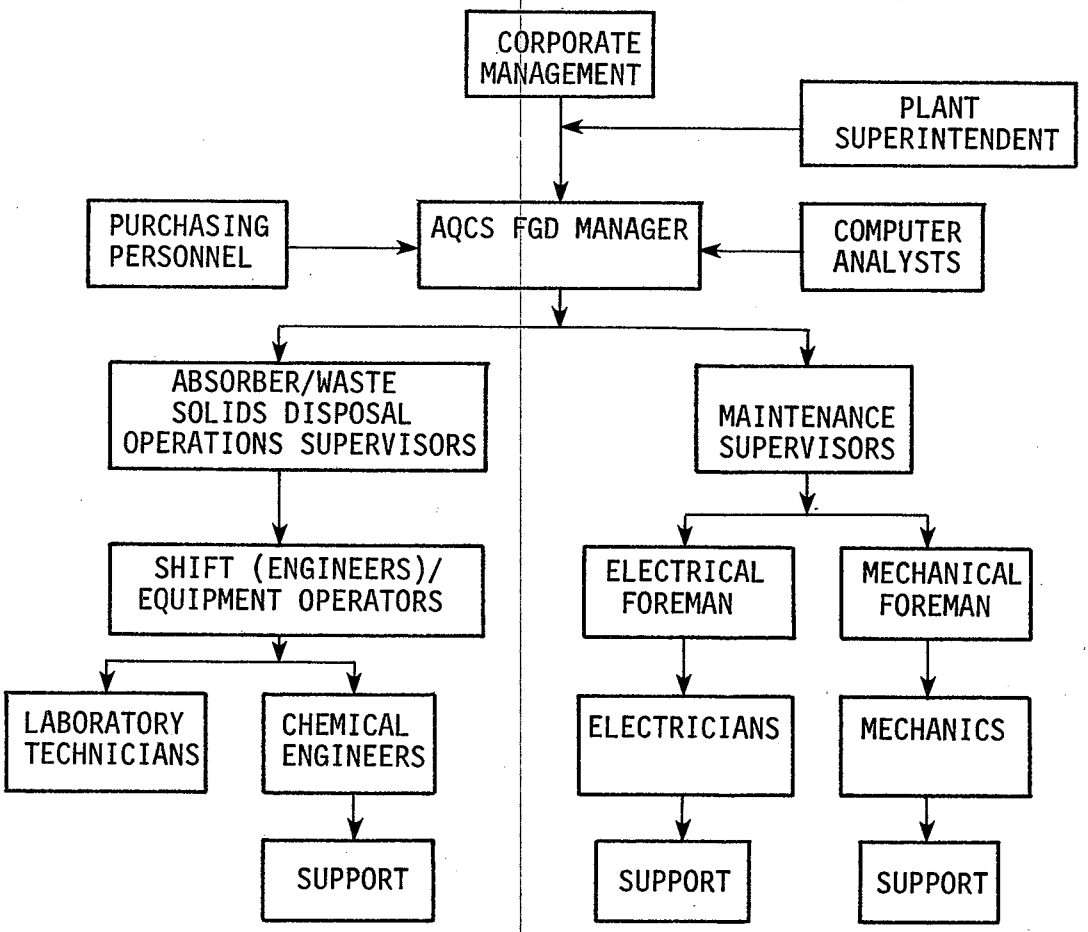

Figure 6.1-1. Organizational diagram for coordinated FGD system O&M program.

These specialists can be supported by laborers from the operating staff. Assignment of maintenance personnel to shift coverage will vary with individual facilities. Where maintenance on the back shift is performed by "on-call" personnel, the standard day-shift maintenance requirements, such as instrument flushing, can be reduced. The potential number of unscheduled maintenance activities (i.e., related to equipment malfunctions) must also be considered in determining the size of the maintenance staff.

Many plants have a relatively high rate of personnel turnover and, therefore, new employees are assigned to work on the FGD system who may have had no previous contact with air pollution control equipment. To provide the necessary technical expertise, the operator utility must establish a formal training program for each new employee assigned to FGD system O&M. The training program should include the supervisors, shift managers, foremen, and support staff. The time period following initial startup and operation of the FGD system presents an excellent opportunity for training the O&M staff. When the FGD system is first placed in operation, system supplier personnel are usually available on site to ensure that the equipment is operating properly. During this period, all equipment should be operated and maintained by the operator utility staff personnel under guidance of the system supplier. Whenever possible, written procedures should be followed so that any error can be identified and corrected.

Safety is an important aspect of any training program (see Section 7.0). Each person associated with the system should have complete instructions regarding confined-area entry, first aid, and lock-out/tag-out procedures.

The O&M training program should also emphasize optimum and continuous performance of the FGD system. The staff should never be given the impression that less-than-optimum FGD performance is acceptable. Redundancy is established in the system solely to provide a margin of safety for achieving compliance during

emergency situations. Once a pattern is established that allows a nonoptimal condition to exist (i.e., reliance on built-in redundancy), this condition then becomes the norm and the margin of safety begins to erode.

To reinforce the training program, follow-up written material should be prepared. Each plant should prepare and continually update an operating manual (see Section 6.2) and a maintenance manual (see Section 6.3) for each FGD system. A generic manual usually is insufficient because each system supplier's design philosophy varies. The use of actual photographs, slides, and drawings aids in the overall understanding of the system and reduces lost time during repair work.

Training material and courses available from the system supplier should be reviewed and presented as appropriate. Further, responsible staff should attend workshops, seminars, and training courses presented by the Electric Power Research Institute (EPRI), EPA, and other organizations to increase their scope of knowledge and keep current with the evolving technology. A typical FGD training program should include safety, theory of operation, physical descriptions of equipment, review of subsystems, normal operation (indicators), abnormal operations (common failure mechanisms), troubleshooting procedures, preventive and reactive maintenance, and recordkeeping.

6.2 OPERATING MANUALS

Operating manuals for FGD systems should contain the following types of information: the operating norm or baseline of the FGD equipment, the particular operating variables which affect their operation, abnormal operating characteristics, safety precautions, and step-by-step startup/shutdown instructions. The operating manual should also parallel the maintenance manual (see Section 6.3) in terms of introductory material so that the operators and maintenance staff have the same basic understanding of

all the FGD equipment and their function and of the overall operating theory. Figure 6.2-1 presents a suggested outline for a typical operating manual. The introductory material of the manual would begin with a basic description of the FGD system and outline the major equipment areas and their associated components. The manual should continue with separate sections on each of the equipment items presented in the introduction. In these sections, the material outlined above would then be addressed.

The operating norm or baseline information for FGD equipment basically describes the mechanical parameter(s) used for gauging whether the equipment is functioning properly. An example of this would be electrical usage (i.e., amperage readings) for motor driven equipment (e.g., pumps, fans, ball mills). The material should also discuss the particular operating variables which affect the equipment operation. Each parameter should be defined, its set point or range given, and information provided on how that parameter is controlled. This type of information is helpful in identifying present or predicting future equipment malfunctions or failures. The manual should also list the normal operating characteristics for each piece of FGD equipment. These internal/external visual aids are extremely critical for determining proper equipment performance. With the use of these aids, operators can possibly alleviate the problem in its earlier stages before it actually manifests itself as a more serious problem (i.e., equipment malfunction or failure). The sections on equipment should also provide step-by-step shutdown procedures and safety precautions for each piece of FGD equipment to ensure sequential outage of FGD equipment and/or boilers, to aid maintenance activities, to eliminate startup problems, and to ensure worker safety. Unless these proper startup/shutdown procedures are followed, operation or maintenance actions could result in either further damage to the equipment, increased emissions, repeated failure, or in the worst case, a worker accident.

I. Introduction

- A. FGD System Description
- B. Major Equipment Areas

II. Gas Handling and Treatment Components

- A. Fans
  1. Operating norm or baseline[a]
  2. Major operating variables[a]
  3. Abnormal operating characteristics[a]
  4. Startup/shutdown procedures[a]
  5. Safety precautions[a]
- B. Scrubbers/Absorbers
- C. Mist Eliminators
- D. Reheaters
- E. Ductwork and Dampers

III. Reagent Preparation

- A. Reagent Conveyors and Storage
- B. Ball Mills
- C. Slakers
- D. Tanks

IV. Waste Solids Handling and Disposal

- A. Thickeners
- B. Vacuum Filters
- C. Centrifuges
- D. Waste Processing
- E. Waste Disposal
- F. Pumps and Valves

V. Emissions Monitoring and Process Control

- A. Gas
  1. Pressure (differential)
  2. Temperature (differential)
  3. Flow
  4. Continuous Emissions Monitoring
     a. SO_2
     b. Particulate matter
     c. NO_x
- B. Slurry
  1. pH
  2. Density (solids)
  3. Flow
- C. Solids
  1. Density (solids)
  2. pH
  3. Flow

---

[a]These considerations apply to all items in Section II, III, IV, and V.

Figure 6.2-1. Outline for FGD Operating Manual.

The remainder of the operating manual should discuss the operation of the continuous emissions monitoring and process control systems. This section would address the same factors described above for the components comprising the two systems.

6.3 MAINTENANCE MANUALS

Specific maintenance manuals should be developed for each FGD system of the operator utility. The basic elements of design and overall operation should be specific to each FGD system and incorporate the manufacturer's documentation and in-house experience for that particular system design. Equipment descriptions (vendor documentation) should be brief and to the point; long narratives without direct application should be avoided.

Figure 6.3-1 presents a suggested outline for a typical manual. The manual should begin with a basic description of the FGD system and outline the major equipment areas and their associated components. The manuals should continue with separate sections on each of the equipment items presented in the introduction. In these sections, the following material would be presented:

- Detailed description of the equipment item and its components
- Equipment layout and schematics
- Internal/external inspection and maintenance procedures (i.e., inspection and maintenance checklists)
- Startup/shutdown procedures
- Safety precautions particular to that equipment item

The equipment descriptions should show the component parts of the equipment item. In addition, detailed drawings and an explanation of the function of each component and its normal conditions should be presented.

The material should discuss the internal/external inspection and maintenance procedures of the equipment and components, both

I. Introduction

- A. FGD System Description
- B. Major Equipment Areas

II. Gas Handling and Treatment Components

- A. Fans
  1. Component descriptions[a]
  2. Layout and schematics[a]
  3. Internal/external inspection and reactive and preventative maintenance procedures[a]
  4. Startup/shutdown procedures[a]
  5. Safety precautions[a]
- B. Scrubbers/Absorbers
- C. Mist Eliminators
- D. Reheaters
- E. Ductwork and Dampers

III. Reagent Preparation

- A. Reagent Conveyors and Storage
- B. Ball Mills
- C. Slakers
- D. Tanks

IV. Waste Solids Handling and Disposal

- A. Thickeners
- B. Vacuum Filters
- C. Centrifuges
- D. Waste Processing
- E. Waste Disposal
- F. Pumps and Valves

V. Emissions Monitoring and Process Control

- A. Gas
  1. Pressure (differential)
  2. Temperature (differential)
  3. Flow
  4. Continuous Emissions Monitoring
     a. SO_2
     b. Particulate matter
     c. NO_x
- B. Slurry
  1. pH
  2. Density (solids)
  3. Flow
- C. Solids
  1. Density (solids)
  2. pH
  3. Flow

[a]These considerations apply to all items in Sections II, III, IV, and V.

Figure 6.3-1. Outline for FGD Maintenance Manual.

of which are extremely critical in maintaining equipment performance. Periodic external checks of all equipment are required in order to spot symptoms or clues which may indicate probable equipment/process deterioration or failure (e.g., failed expansion joint, leaky pump). More importantly, however, most FGD equipment (e.g., absorbers, pumps, fans) have internal parts which must be inspected and overhauled periodically in order to assure that these items continue to function properly.

The remainder of the section on the equipment should focus on startup/shutdown procedures and safety precautions particular to the equipment in order that it can be inspected, repaired, and brought back on-line without harm to either the maintenance crew or the equipment itself.

The remainder of the maintenance manual should discuss the maintenance and inspection of the continuous emissions monitoring and process control systems. An additional section describing the correct procedures for completing and processing work orders (see Section 6.6) is also recommended.

6.4 TROUBLESHOOTING TECHNIQUES

Troubleshooting a lime/limestone FGD system requires a multiphase program that should be organized along the following lines.

Phase 1: Problem Identification. This phase begins with a detailed inspection of the system utilizing the procedures described in Section 4. All observations (positive and negative) are listed, interpretations are developed (why things were the way they were), and finally, methods and items that will improve performance are recommended. Recommendations may call for design modifications, replacement of components or accessories, or the fabrication of new equipment.

Phase 2: Implementation. After thorough analysis, the Phase 1 recommendations should be implemented by repair and by

replacement with procured and fabricated components. The system is then started up and debugged.

Phase 3: Testing and Sampling. A performance test must be conducted to evaluate the effects of the work on system operation (see Section 3.3). Testing may be done by stack sampling and/or measurements with the system in continuous operation.

Phase 4: Operational Troubleshooting. Certain symptoms are attributable to more than one cause. Section 5.3 (Problem Diagnosis and Corrective Measures) gives typical symptoms, probable causes, and suggested remedies. The information presented in this section should not be regarded as exhaustive of all possibilities; no report, maintenance protocol, or operator instruction manual can take the place of a well-trained maintenance staff familiar with the equipment and its operating history.

6.5 SPARE PARTS

Two separate categories of spare parts can be identified--installed spares and shelf spares. Installed spares are redundant components that are built into the system. These components can be activated and placed into service expeditiously in the event of a forced or scheduled outage. Shelf spares are components that are stored for replacement of in-service components. Shelf spares are considered true spare components in that they are required to replace components that fail in service. Accordingly, the balance of this section will be devoted to a discussion of shelf spares.

An inventory of spare parts should be maintained on-site to support the required maintenance activities. Because all components or subassemblies cannot be stocked, a rational system must be developed that establishes a reasonable inventory of spare parts. Decisions regarding which components to include in the spare parts inventory should be based on the following considerations:

1. Probability of failure

2. Cost

3. Impact on system/unit operation

4. Availability (specialty or custom-fabrication item vs. stock item)

5. Replacement time (installation)

6. Whether the part can be stored as a component or sub-assembly (i.e., conveyor belt assembly vs. individual components)

7. Repair center (i.e., in-house technical repair capabilities)

8. Spatial constraints

The probability of failure can be developed from outside studies,[6] supplier recommendations, and past histories of the system components. It is reasonable to assume that components subject to environments of erosion, scaling/plugging, corrosion, weather, extreme and sudden temperature differentials, or wear are the most likely to fail. Components of this type are no different from those in the entire FGD process, and reasonable judgment must be used in deciding what to stock. Maintenance staff members should be consulted for recommendations concerning some items that should be stocked and the number required. Adjustments to the initial spare parts inventory can be made as operating experience is gained and decisions are made regarding the degree of redundancy (installed spares) in the system.

Another factor in defining a spare parts inventory is the cost of individual components. Although stocking slaker agitators, rakes, and other slaker components may not be costly, stocking a spare compressor for the reagent conveying system could be quite costly. Maintaining an extensive inventory of high-cost items that have low probability of failure is not justified.

The impact that a failed component has on system/unit operation should strongly influence whether an item should be spared. These components represent items which are essential to maintaining FGD system/unit operation. Non-replacement of these components would impact FGD operation relatively quickly, possibly causing a curtailment or total system/unit outage. Components that fall into this category include spare parts of major items comprising the reagent preparation and feed equipment area.

The availability of the component (i.e., specialty items versus stock items) and the time required to replace the component are additional factors which must be considered. If the lead time to order a part from the supplier is a matter of weeks or months because it must be specially fabricated instead of taken directly from stock, or if the repair is a time-consuming procedure, stocking such items is advantageous.

Many operator utilities have implemented electrical and mechanical shops (i.e., repair centers) where trained staff can coordinate the repair or rebuilding of components to meet original design specifications. The establishment of such a service facility can greatly reduce the need to maintain component parts or subassemblies. In these cases, one replacement part can be stocked for installation during the period when repairs are being made.

If the plant has very limited space, as is the case for most retrofit applications, spatial constraints may come into play. The number, type, and size of spare parts may have to be reduced to fit the available space allotted for plant inventory.

6.6 WORK ORDER SYSTEMS

A work order system is a valuable tool that allows the AQCS manager to track FGD system performance over a period of time. Work order and computer tracking systems (see Section 6.7) are

generally designed to ensure that the work has been completed and that charges for labor and parts are correctly assigned for accounting and planning purposes. With minor changes in the work order form and in the computer programs, the work order also can permit continuous updating of failure-frequency records and can indicate whether the maintenance performed has been effective in preventing repeated failures. In general, the work order serves three basic functions:

1. It authorizes and defines the work to be performed.
2. It verifies that maintenance has been performed.
3. It permits the direct impact of cost and components data to be entered into a computerized data handling system.

To perform these functions effectively, the work order form must be specific, and the data fields must be large enough to handle detailed requests and to provide specific responses. In many computerized systems, the data entry cannot accommodate a narrative request and specific details are lost.

Most systems can accommodate simple repair jobs because they do not involve multiple repairs, staff requirements, or parts delays. Major repairs, however, become lost in the system as major events because they are subdivided into smaller jobs that the system can handle. Because of this constraint, a large repair project with many components that may have a common cause appears to be a number of unrelated events in the tracking system.

For diagnostic purposes, a subroutine in the work order system is necessary that links repairs, parts, and location of failure in an event-time profile. Further, the exact location of component failures must be clearly defined. In effect, it is more important to know the pattern of failure than the cost of the failure.

The goal of the work order system can be summarized in the following items:

- To provide systematic screening and authorization of requested work.
- To provide the necessary information for planning and coordination of future work.
- To provide cost information for future planning.
- To instruct management and craftsmen in the performance of repair work.
- To estimate manpower, time, and materials for completing the repair.
- To define the equipment that may need replacement, repair, or redesign (work order request for analysis of performance of components, special study, or consultation, etc.).

Repairs to the FGD system may be superficial or cosmetic in nature or they may be of an urgent nature and require emergency response to prevent damage or failure. For a typical utility FGD system, numerous work order requests may be submitted as a result of daily inspections or operator analysis. Completing the jobs in a reasonable time requires scheduling the maintenance staff and ordering and receiving parts in an organized manner.

For effective implementation of the work order system, the request must be assigned a level of priority as to completion time. These priority assignments must take into consideration plant and personnel safety, the potential effect on emissions, potential damage to the equipment, maintenance personnel availability, parts availability, and boiler or process availability. Obviously, all jobs cannot be assigned the highest priority.

Careful assignment of priority is the most critical part of the work order system, and the assignment must be made as quickly as possible after requests are received. An example of a five-level priority system is shown below in Table 6.6-1.

TABLE 6.6-1. WORK ORDER PRIORITY SYSTEM

Priority	Action
1	Emergency Repair
2	Urgent repair to be completed during the day
3,4	Work which may be delayed and completed in the future (during periods of low demand)
5	Work which may be delayed until a scheduled outage

If a work order request is too detailed, it will require extensive time to complete. Also, a very complex form leads to superficial entries and erroneous data. The form should concentrate on the key elements required to document the need for repair, the response to the need (e.g., repairs completed), parts used, and manpower expended (see Figure 5.2-8). Although a multipage form is not recommended, such a form may be used for certain purposes. For example, the first page can be a narrative describing the nature of the problem or repair required and the response to the need. It is very important that the maintenance staff indicate the cause of the failure and possible changes that would prevent recurrence. It is not adequate simply to make a repair and respond that "the repairs have been made." Unless a detailed analysis is made of the reason for the failure, the event may be repeated several times. Treating the symptom (making the repair; replacing spray nozzles, pump impellers, etc.) is not sufficient; the cause of the failure must be treated.

In summary, the following is a list of how the key areas of a work order request are addressed:[13]

1. Date - The date is the day the problem was identified or the job was assigned if it originated in the planning, environmental, or engineering sections.

2. Approved by - This indicates who authorized the work to be completed, that the request has been entered into the system, and that it has been assigned a priority and schedule for response. The maintenance supervisor or AQCS manager may approve the request, depending on

the staff and the size of the system. When emergency repairs are required, the work order may be completed after the fact, and approval is not required.

3. Priority - Priority is assigned according to job urgency on a scale of 1 to 5.

4. Work order number - The work order request number is the tracking control number necessary to retrieve the information from the computer data system.

5. Continuing or related work order numbers - If the job request is a continuation of previous requests or represents a continuing problem area, the related number should be entered.

6. Equipment number - All major FGD equipment should be assigned an identifying number that associates the repair with the equipment. The numbering system can include major equipment area, subsystem, module, and component. This numeric identification (ID) can be established by using a field of grouped numbers. The purpose of the ID system is to enable analysis of the number of events and cost of repair in preselected areas of the FGD system. The fineness or detail of the equipment identification system will specify the detail available in later analyses.

7. Description of work - The request for repair is usually a narrative describing the nature of the failure, the part to be replaced, or the work to be completed. The description must be detailed but brief because the number of characters that can be entered into the computerized data system is limited. Additional pages of lengthy instruction regarding procedures may be attached to the request (not for computer storage).

8. Estimated labor - Assignment of personnel and scheduling of outages of certain equipment require the inclusion of an estimate of man-hours, the number of in-house staff needed, and whether outside (contract) labor is needed. The more complex jobs may be broken down into steps, with different personnel and crafts assigned specific responsibilities. Manpower and procedures in the request should be consistent with procedures and policies established in the O&M manual.

9. Material requirements - In many jobs, maintenance crews will remove components before a detailed analysis of the needed materials can be completed; this can extend

an outage while components or parts are ordered and received from suppliers or retrieved from the spare parts inventory. Generally, the cause of the failure should be identified at the time the work order request is filled, and specific materials needs should be identified before any removal effort begins. If the maintenance supervisor knows in advance what materials are to be replaced, expended, or removed, efficiency is increased and outage time reduced. Also, if parts are not available, orders may be placed and the parts received prior to the outage. Material requirements are not limited to parts; they also include tools, safety equipment, etc.

10. Action taken - This section of the request is the most important part of the computerized tracking system. A narrative description of the repair conducted should be provided in response to the work order request. The data must be accurate and clearly respond to the work order request.

11. Materials replaced - An itemized list of components replaced should be provided for tracking purposes. If the component has a preselected ID number (spare parts inventory number), this number should be included.

Actual man-hours expended in the repair can be indicated by work order number on separate time cards and/or job control cards by craft and personnel number.

Copies of work orders for the FGD system should be retained for future reference. The AQCS manager should review these work orders routinely and make design changes or equipment changes as required to reduce failure or downtime. An equipment log also should be maintained and the work should be summarized and dated to provide a history of maintenance on the system.

6.7 COMPUTERIZED TRACKING SYSTEM

Again, it should be emphasized that the purpose of the computerized tracking system is not to satisfy the needs of the accountants or to state that the plant has such a system. Rather, the purpose of a computerized tracking system is to provide the necessary information to analyze FGD O&M practices and to reduce

equipment failures, system/unit outages, and emission excursions. The O&M staff and AQCS manager must clearly define the kinds of data to be collected, the level of detail, and the type of analysis required prior to the purchase/lease of any computer equipment and the preparation of the data-handling and report-writing software.

The operator utility has many options regarding the physical location of its computerized tracking system. The system could range anywhere from an in-house personal computer (PC) to a time-share system by which data are input and accessed interactively via remote terminals on either a mainframe or minicomputer. The operator utility may even choose to purchase and operate its own computer and time-share versus leasing computer space. The operator utility must weigh many factors before choosing any of the above alternatives. The key factors are the complexity of the tracking system, number of FGD systems, computer staff, available software, number of users, input/output features, available storage space, and computer costs.

The data base for the computerized tracking system should contain the following type of information: work orders, preventative maintenance man-hours, operating parameters, and service hours.

If the work completed and parts used are documented on the work orders (see Section 5.2.3 and 6.6) and entered into the computerized tracking system with sufficient detail, maintenance and management personnel can easily evaluate the effectiveness of FGD system maintenance.

Preventive maintenance (see Section 2.5.3.6) man-hours versus reactive maintenance man-hours can be compared to evaluate the effectiveness of the current preventive maintenance (PM) program. The level of detail may allow tracking of the impact of PM on particular components as changes are made in PM procedures. The effectiveness of the PM program may be further evaluated by

the required number of emergency repairs versus scheduled repairs over a period of time (i.e., priority 2 versus priority 5, etc.).

In addition to tracking work orders and PM man-hours, the computer can be used to develop correlations between unit/FGD operating parameters and observed equipment malfunctions/failures. Depending on the parameter type and cycles expected in unit operation, the data may be continuously entered into the tracking system or it may be entered from operating logs or daily inspection reports once or twice per week. The key parameters for tracking FGD equipment performance should include boiler load, coal properties (see Section 2.2), gas flow (see Sections 3.1.1.5 and 5.2.2.1), slurry flow rates (see sections 3.1.2.2 and 5.2.2.4), reagent consumption (see Sections 2.3.2.1 and 5.2.2.6), waste solids production (see Section 5.2.2.7), and makeup water consumption (see Section 5.2.2.8).

Finally, equipment service time is another data item that should be tracked so that it can be analyzed/correlated along with the other data items. This type of data can also be utilized to evaluate overall FGD system operation through the development of dependability factors such as FGD system availability and reliability.

SECTION 7

SAFETY

The safety of agency personnel during field inspections is of primary importance. The field inspector should take adequate precautions to guard against inhalation of toxic gases, skin irritation or chemical burns, and exposure to fugitive dust. In addition, normal industrial safety practices should be followed, such as attention to electrical power lines and connections, attention to steam lines and connections, attention to rotating equipment, and protection against falling objects. During an FGD inspection, many of these concerns are simultaneous and can result in potentially serious injuries to the inspection personnel. Familiarization with safety procedures and use of necessary safety equipment can result in inspections being performed safely without risk of injury.

This section discusses many of the potential hazards and addresses proper safety procedures. Further information concerning safety precautions/considerations can be found in specific vendor equipment O&M manuals for the FGD systems and subsystems, Occupational Safety and Health Administration (OSHA) publications, and National Institute for Occupational Safety and Health (NIOSH) publications.

7.1 INHALATION OF TOXIC GASES

There are two major classes of toxic gases which can be present in and around areas of the FGD systems: irritants and asphyxiants.

Irritants are gases, which at very low concentrations are mildly irritating to the eyes, throat, upper respiratory system,

and nervous system. At higher levels, they can even cause death. Sulfur dioxide and hydrogen sulfide (H_2S) are both irritants which are present in boiler flue gas. Sulfur dioxide is present in much greater concentration than H_2S.

Inhalation of SO_2 at concentrations of 8 to 12 ppm causes throat irritation, coughing, constriction of the chest, and tearing of the eyes. A concentration of 150 ppm is extremely irritating and can be endured only for a few minutes. A concentration of 500 ppm is acutely irritating to the upper respiratory tract and causes a sense of suffocation, even with the first breath. While SO_2 is extremely irritating to the eyes and mucous membranes of the upper respiratory tract, it has exceptionally good warning powers. The normal person can detect 3 to 5 ppm in the air. The Threshold Limit Value (TLV) established by the American Conference of Governmental Industrial Hygienists (ACGIH) establishes the airborne concentration of substances to which persons may be exposed without adverse health effects. The TLV for SO_2 is 5.0 ppm (0.0005 percent by volume).

Hydrogen sulfide is another toxic irritant which could be present in very low concentrations in the flue gas. Concentrations of H_2S as little as 100 ppm (0.01 percent by volume) may cause death if exposure occurs for more than a few hours. In lower concentrations, it is classified as an irritant because it inflames the mucous membranes and results in the lungs filling with fluid. This colorless gas has a characteristic rotten egg odor. Because the gas renders the olfactory nerve ineffective, an inspector may be lulled into a false sense of security not realizing that a toxic concentration of the gas may be present. The TLV for H_2S is 10 ppm (0.001 percent by volume).

Substances which render the body incapable of utilizing an adequate oxygen supply are referred to as chemical asphyxiants. Carbon monoxide (CO) is a chemical asphyxiant which is present in boiler flue gas. It is formed by incomplete combustion of the

coal. Exposure to high levels of CO can, over prolonged periods, lead to death. The TLV for CO is 50 ppm (0.005 percent by volume).

The aforementioned toxic gases can be present in potentially dangerous concentrations in confined nonventilated areas such as the interiors of scrubber/absorber towers and ductwork. Although these equipment areas may be out of service for maintenance and appear safe for entrance, precautions should be taken prior to internal inspection. Isolation dampers may not be properly closed or pressurized with adequate amounts of seal air to eliminate the possibility of boiler flue gases from leaking into these equipment areas. Entrance should only be made upon clearance from plant personnel who have first taken the precaution of ventilating and monitoring the gaseous concentrations within the equipment area.

7.2 SKIN IRRITATION AND/OR CHEMICAL BURNS TO THE SKIN

Irritation and chemical burns to the skin can result from inadvertent contact with either alkaline slurry or acid condensation. Areas where possible contact with slurries can easily occur include slurry preparation equipment, slurry pipe lines and valves, scrubber/absorber towers, and equipment used for solid waste handling and treatment. The inspector should be especially aware of airborne slurry from sources located overhead. Acid condensation from the flue gas usually occurs in certain internal wet areas of the scrubber, absorber, ductwork, and stack. Skin contact with acidic condensation in these areas could cause severe burns. To prevent possible irritation or burns to the body areas, gloves and protective clothing should be worn at all times when entering or inspecting the equipment areas noted above. If exposure does occur, the affected areas should be washed with water thoroughly.

Skin irritation or burns may also result from contact with dust particles depending on their acidic, alkaline, hygroscopic,

or abrasive nature. Section 7.3 discusses potential locations of these dust sources in the FGD system. Inspection personnel can limit skin contact area and thus prevent potential irritation by wearing long-sleeved shirts and gloves during internal inspections of equipment.

7.3 EXPOSURE TO FUGITIVE DUST

Sources of fugitive dust include ground surfaces, surfaces of access scaffolds, ladders and handrails, equipment surfaces, and stagnant areas found within equipment. This material can easily be dislodged and suspended by wind, drafts, moving equipment, or by plant and agency personnel. Fugitive dust around the FGD system may consist of any or all of the following materials: coal dust, reagent (lime/limestone) particles, fly ash, gypsum particles, dirt, and solid waste material. Fugitive dust is an irritant because of its abrasive nature (i.e., sharp-edged or crystalline form). However, fugitive dust can also subject the eyes and lungs to chemical damage depending on the chemical composition of the dust. Of special concern are sulfuric acid and alkaline slurry agents. The heaviest concentrations of coal dust and reagent particles exist in and around coal and reagent stockpiles, conveyors, storage silos, coal pulverizers, and reagent preparation equipment such as ball mills and slakers. Fly ash is normally only encountered within equipment items (e.g., particulate scrubbers, dampers, ductwork, fans). However, fly ash may also be encountered in and around the solid waste disposal system (e.g., fly ash silo, pug mill) if utilized to fixate or stabilize the solid waste material. Dust consisting of dirt, gypsum, and dried solid waste material may be encountered in high concentrations in and around the waste disposal handling conveyors and disposal area (e.g., stockpiles, landfill area). To prevent irritation, goggles and dust masks should be worn, especially on windy days or when inspecting equipment internals.

7.4 NORMAL INDUSTRIAL SAFETY PRACTICES

This section discusses normal industrial safety practices which should be followed during plant inspections. The field inspector should take to the plant or obtain from plant personnel the necessary personal protective equipment needed for conducting the plant inspection. This consists of safety glasses with side shields, a hard hat, gloves, protective clothing, steel-toe shoes with nonslip soles, and a dust mask. As discussed previously, some of the protective equipment will be required only in certain areas of the plant. It is also advisable to remove any jewelry, neck ties, and other loose objects prior to the inspection in order to safeguard against moving machinery or other catch/snare points (i.e., jagged edges on ladders, handrails, access doors). While conducting the inspection, the inspector should obey plant safety rules, not smoke, walk slowly, observe any interlock procedures, avoid opening equipment access doors, avoid touching or entering operating equipment, avoid manipulating valves or controls, ensure that foreign objects (e.g., hard hats) do not fall into open tanks or thickeners, and should not try in any way to physically change the operating characteristics of the plant equipment. In addition, the field inspector should use handrails when using scaffolds and steps and have both hands free for climbing ladders. Inspectors should avoid ladders which are either not equipped with safety cages or are too strenuous to climb. Use of a flashlight is recommended when inspecting interiors of different equipment. The field inspector should try to avoid poor footing areas; these include slippery surfaces (e.g., wet slurry, ice, snow), tripping hazards (e.g., unguarded openings, hoses, tools, equipment items), and damaged or worn surfaces. Finally, the field inspector should be wary of overhead hazards such as falling objects (e.g., tools, slurry) and low head clearance areas (e.g., piping, steel supports).

REFERENCES

1. Jones, D. G., et al. Lime/Limestone Scrubber Operation and Control Study. Research Project 630-2. Prepared for Electric Power Research Institute, Palo Alto, California. 1978.

2. Smith, E. O., et al. Lime FGD Systems Data Book - Second Edition. CS-2781. Research Project 982-23. Prepared for Electric Power Research Institute, Palo Alto, California. January 1983.

3. Smith, E. O., et al. Limestone FGD Systems Data Book. CS-2949. Research Project 1857-1. Prepared for Electric Power Research Institute, Palo Alto, California. March 1983.

4. Rosenberg, H., et al. Lime FGD Systems Data Book. FP-1030. Research Project 982-1. Prepared for Electric Power Research Institute, Palo Alto, California. May 1979.

5. Henzel, D. S., et al. Limestone FGD Scrubbers Users Handbook. Prepared for U.S. Environmental Protection Agency, Industrial Environmental Research Laboratory, Research Triangle Park, North Carolina. April 1981.

6. Kenney, S. M., et al. Failure Mode Analysis for Lime/Limestone FGD Systems. Volume I - Description of Study and Analysis of Results. Prepared for U.S. Department of Energy, Morgantown Energy Technology Center, Morgantown, West Virginia. DOE/METC/84-26 (DE84011958). August 1984.

7. Jahnke, J. A., and G. J. Aldina. Continuous Air Pollution Source Monitoring Systems. Prepared for U.S. Environmental Protection Agency, Environmental Research Information Center, Research Triangle Park, North Carolina. EPA-625/6-79-005. June 1979.

8. Delleney, R. D., and P. K. Beekley. Process Instrumentation and Control in SO_2 Scrubbers. CS-3565. Research Project 2249-1. Prepared for Electric Power Research Institute, Palo Alto, California. June 1984.

9. Kashdan, E. R., and M. B. Ranade. Design Guidelines for an Optimum Scrubber System. Prepared for U.S. Environmental Protection Agency, Environmental Research Information Center, Research Triangle Park, North Carolina. EPA-600/7-79-018. January 1979.

10. Melia, M. T., et al. Utility FGD Survey, July 1982 - March 1983. Volume 2: Design and Performance Data for Operational FGD Systems. CS-3369. Research Project 982-32. Prepared for Electric Power Research Institute, Palo Alto, California and U.S. Environmental Protection Agency, Industrial Environmental Research Laboratory, Research Triangle Park, North Carolina. April 1984.

11. Steam Electric Plant Factors. National Coal Association, Washington, D.C. 1983.

12. U.S. Environmental Protection Agency. Compilation of the Air Pollutant Emission Factors. 3rd ed. (including Supplements 1-13). AP-42. Research Triangle Park, North Carolina. 1977.

13. Vuchetich, M. A., and R. J. Savoi. Electrostatic Precipitator Training Program and Operation and Maintenance Manual Development at Consumers Power Company. In: Proceedings Conference on Electrostatic Precipitator Technology for Coal-Fired Power Plants. EPRI CS-2908. April 1983.

APPENDIX A
GLOSSARY OF TERMINOLOGY

GLOSSARY OF TERMINOLOGY

acfm (actual cubic feet per minute) - A gas flow rate expressed with respect to operating conditions (temperature and pressure).

Absolute humidity - The weight (or mass) of water vapor in a gas water-vapor mixture per unit volume of space occupied.

Absorber - General term for those gas/liquid contacting devices designed primarily for the removal of SO_x pollutants.

Absorption - The process by which gas molecules are transferred to a liquid phase during scrubbing.

Additive reagent - That particular chemical compound or element which is added to the FGD process as an additional reagent to promote improved process operation (see process additives).

Agitator/mixer - A slowly rotating rake, or set of blades or paddles fastened to a shaft and motor, used in tanks and thickeners to promote completion of chemical reaction, maintain underflow solids in a fluid state, maintain a homogenous slurry, or rake underflow solids to a center discharge sump.

Alkaline fly ash scrubbing - An FGD process that uses the alkaline constituents of fly ash collected from the burning of western coals as the primary absorbent.

Alkalinity - Represents the amount of carbonates, bicarbonates, hydroxides, or phosphates contained in the water, scrubber liquor, or wastes.

Ambient - Pertaining to the conditions (pressure, air quality, temperature, etc.) of the surrounding environment of a plant or scrubbing system.

Annual outage - A scheduled period of time (generally four to six weeks) set aside by the utility once per year to shut down the boiler and/or FGD system for inspection and maintenance.

Atomizer - A device used to disperse a liquid (water/slurry) into a gas stream by reducing the liquid into a fine spray.

Axial flow fan - A mechanical air mover that consists of propeller-like blades rotating in a plane perpendicular to the gas stream about a shaft resting in a plane parallel to the gas stream.

Ball mill - A rotating drum loaded with steel balls that is used to crush and slurry materials, such as limestone, to a particle size suitable for efficient chemical reactivity.

Base load - A generating station which is normally operated to take all or part of the normal load of a system and which, consequently, operates at a constant output.

Blanketing plate - The simplest of dampers consisting of a steel plate which is bolted into place to close off and isolate ducts and/or scrubbers.

Blinding (reagent) - A phenomenon where chemical reaction of a reagent particle in a scrubbing slurry is primarily limited to the surface of that particle so that less than 100 percent of the reagent molecules within the particle are exposed to the gas molecules that are to be collected.

Bottom ash - Heavy solid particles of noncombustible ash that fall to the bottom of the boiler.

British thermal unit (Btu) - The amount of heat required to raise the temperature of one pound of water one degree Fahrenheit, averaged from 32° to 212°F.

Butterfly damper - A damper consisting of a simple plate that opens or closes by turning the plate parallel or perpendicular to the gas flow.

Bypass reheat - A system which boosts the temperature of the saturated flue gas leaving an FGD system above dew point by ducting a slip stream of particle-cleaned flue gas from the ESP exit duct past the FGD system to the absorber outlet duct or directly to the stack, preventing stack damage from acid rainout.

Byproduct (recoverable byproduct) - Saleable materials produced by various regenerable-type FGD systems.

Capacity factor - The ratio of the average load on a boiler for the period of time considered to the capacity rating of the boiler (actual kWh produced/ theoretical kWh produced x 100).

Carryover - Entrained solids, slurry droplets, and/or mist that leaves with the flue gas stream exiting a particular stage of a scrubber or absorber.

Centrifugal fan - An air mover consisting of a drum of blades or slat-type vanes aligned parallel to the entering gas stream that rotates rapidly about an axis also parallel to the entering gas stream, casting the gas outward into the housing and through an exiting duct connected tangentially to the housing.

Centrifuge - A drum and worm gear type machine that separates solids from the entering slurry stream by centrifugal force as the drum and gear rotate at slightly different speeds.

Chloride - A compound of chlorine with another element or radical.

Closed water loop - The water loop of an FGD system is closed when the fresh makeup water added exactly equals the evaporative water loss leaving via the stack and the water chemically or physically bonded to the sludge product.

Cocurrent flow - The process in which absorbent liquor or slurry enters the absorber from the same direction as the gas stream so that SO_2 collection occurs as the gas and liquid pass simultaneously through the lower absorber.

Cold-side ESP - An ESP located downstream of the boiler air preheater.

Combination tower - An absorber that consists of a combination of two or more types of absorbers within the same tower such as a level of sprays followed by a level of absorber packing material (spray/packed type combination tower).

Configuration (horizontal/vertical mist eliminator) - A horizontal configuration is one in which the mist eliminator lays across the vertical duct or absorber tower with the wet gas rising up through the mist eliminator. A vertical configuration is one in which the mist eliminator is fastened vertically in a horizontal duct run downstream of the absorber tower.

Continuous analyzer - Gas or liquid monitoring devices which automatically take readings or measurements on a continual basis (e.g., SO_x, NO_x, O_2, etc. continuous stack monitors).

Cooling tower blowdown - The wastewater characterized by high concentrations of soluble salts periodically purged from the boiler cooling tower and sometimes used as makeup for the FGD system.

Corrosion - The deterioration of a metallic material by electrochemical attack.

Countercurrent flow - The process in which absorbent liquor or slurry enters the absorber tower from the opposite direction of the gas stream so that SO_2 collection occurs as the gas and liquid collide in the tower.

Crosscurrent flow - The process in which absorbent liquor or slurry enters the absorber perpendicular to the gas stream flow so that SO_2 collection occurs as the gas and liquid paths intersect.

Cycling load - A generating station which is operated continuously but fluctuates its load throughout a given day based on electrical demand.

Cyclone - A piece of air pollution hardware used for particle removal that uses centrifugal separation to effect particle collection.

Damper - A plate or set of plates or louvers in a duct used to stop or regulate gas flow.

Density meter - Electronic device used to measure fixed density (mass per unit volume).

Dewpoint - The temperature at which vapor contained in saturated flue gas begins to condense.

Direct combustion reheat - A flue gas reheat system that boosts the temperature of the saturated gas from the absorber above dewpoint; this is accomplished by injection of the hot combustion products generated by oil or gas reheater burners into the gas stream.

Disposal (also referred to as waste disposal) - Removal of and discarding of non-saleable waste from an FGD system in the form of ponding, landfilling, mine filling, etc.

Dolomite (dolomitic lime or limestone) - A crystallized mineral consisting of calcium magnesium carbonate ($CaMg(CO_3)_2$).

Efficiency - Ratio of the amount of a pollutant removed to the total amount introduced to the normal operation.

End product:

Salable - The SO_2 removed from the flue gas is recovered in a usable or marketable form (e.g., gypsum).

Throwaway - The SO_2 removed from the flue gas is not recovered in a usable or marketable form, and the resulting sulfur-bearing waste products must be disposed of in an environmentally acceptable fashion.

Entrainment - The suspension of solids, liquid droplets, or mist in a gas stream.

Equivalent scrubbed capacity (ESC) - The effective scrubbed flue gas in equivalent MW based on the percent of flue gas scrubbed by the FGD system.

Erosion - The action or process of wearing away of a material by physical means (friction).

ESP (electrostatic precipitator) - An air pollution device used to remove particles from an exhaust stream by initially charging them with electrodes and then collecting them on oppositely charged plates.

Excess air (percent) - The percentage of air supplied for combustion in excess of that theoretically required for complete oxidation.

Expansion joint - A small section of ductwork or piping that is designed to passively expand or contract as required by the flexing of more rigid duct runs, piping, or pieces of equipment as such components are exposed to varying external and internal temperatures.

Fan - A piece of equipment designed to move air by creating a high or low pressure through mechanical means.

FD (forced draft) - A fan or blower used to produce motion in an enclosed stream of gases by creating a positive pressure in the stream, effectively pushing it through the system.

Feedback control - An automatic control system in which information about the controlled variable (SO_2, temperature, pH, etc.) is fed back after scrubbing has taken place and is used as the basis for control of the process variable (reagent feed, steam, etc.).

Feedforward control - An automatic control system which measures an upstream process variable (gas flow rate, temperature, slurry flow rate, and/or pH, etc.) and compensates immediately without waiting for a change in the controlled variable (SO_2, temperature, pH, etc.) downstream to indicate a change has occurred.

FGD (flue gas desulfurization) - The process by which sulfur is removed from the combustion exhaust gas.

FGD battery limits - An imaginary boundary that encompasses all equipment, ponds, special liners, etc. that would not otherwise be installed if an FGD system was not required.

Fixation - Increasing the chemical stability of FGD waste through chemical means such as addition of alkali, alkaline fly ash, etc. usually in conjunction with dewatering and blending of inert solids; or through the use of commercial processes (e.g., POZ-O-TEC, Calcilox, etc.) to produce a chemically stable solid.

Fly ash - Fine solid particles of noncombustible ash carried out of the boiler by the exiting flue gas.

Forced outage - The FGD system is taken out or forced out of service to make necessary repairs or modifications regardless of boiler availability such that the system is unavailable for service.

Forced oxidation - A process in which sulfite-containing compounds are further oxidized to sulfate compounds by aeration with air or pure oxygen to promote dewatering, ease of handling, and/or stability in the waste product.

Gas contacting device - Grids, balls, marbles, trays, rods, or other obstacles in the gas path within a scrubber/absorber intended to effect intimate mixing and promote the gas-liquid transfer of SO_2 to the scrubbing liquor or slurry.

Gas/liquid distribution (in absorber scrubber) - The presence of random mixing of flue gas with scrubber liquor throughout a wet scrubbing device without the occurrence of static pockets or streams of uncontacted gas and liquor.

Guillotine damper - A damper whose operation is characterized by a vertical or horizontal sliding gate or plate resembling a guillotine as it is moved into and out of the gas path.

Heat exchanger - Device used to transfer sensible and/or latent heat from one stream of material to another to raise or lower the temperature of one of the materials.

Heat rate - A measure of generating station thermal efficiency, generally expressed in Btu per net kilowatt-hour. It is computed by dividing the total Btu content of fuel burned for electric generation by the resulting net kilowatt-hour generation.

Hot-side ESP - An ESP located immediately upstream of the boiler air preheater.

ID (induced draft) - A fan used to move an enclosed stream of gases by creating a negative relative pressure in the stream to effectively draw the gas through the system.

Indirect hot air - A flue gas reheat system in which reheat is achieved by heating ambient air with an external heat exchanger using steam at temperatures of 350° to 450°F.

In-line reheater - A heat exchanger installed in the wet flue gas duct downstream of the mist eliminator, usually consisting of hot water or steam coils used to boost the wet flue gas temperature above dewpoint.

Knock-out tray - A wash-tray type pre-mist eliminator using valve or bubble-cap type mechanisms to capture the bulk of the entrained solids, droplets, and mist carrying over from the scrubber/absorber of an FGD system.

Landfill - A method of waste disposal in which the dried FGD byproduct wastes are dumped and packed, or buried between layers of earth near ground level or below ground level.

L/G ratio (liquid-to-gas ratio) - The ratio of the total liquid exposed to the gas stream in an FGD system (in gallons) to the inlet gas flow rate (in increments of 1000 acf).

Liner - A metal, organic, or inorganic type material applied to a shell of an FGD system component which is intended to protect the shell from abrasion, heat, and/or corrosion.

Load factor - The ratio of the average load in kilowatts supplied during a designated period to the peak or maximum load in kilowatts occurring in that period.

Louver damper - A damper consisting of several blades each pivoted about its center and linked together for simultaneous operation.

Makeup water - Water added to an FGD system to maintain a certain slurry solids level by making up for water losses resulting from evaporation and exiting waste streams.

Mechanical dewatering equipment - Devices used to decrease the moisture level of FGD waste to the point where the material can be handled more easily and disposed of as a stable solid suitable for landfill (e.g., vacuum filter, centrifuge, hydrocyclone, etc.).

Mist - Dispersion of relatively large liquid particles in a gas stream, carryover from a gas-liquid contact operation.

Mist eliminator - A piece or section of pollution hardware used to remove a dispersion of liquid particles from a gas stream.

> Precollector - A mist eliminator that directly follows the scrubber/absorber and is intended to remove the bulk of the entrained solids, water droplets, and mist from the flue gas stream.
>
> Primary collector - A mist eliminator that removes entrained solids, water droplets, and mist not collected by the precollector.

Mist eliminator passes/stage - The number of direction changes the gas stream must make before it exits the mist eliminator stage.

Mist eliminator stages - The number of individual mist eliminators (e.g., 2-stage mist eliminator - bulk separator followed by an impingement collector).

Mist eliminator vane angle - The angle measured between the intersection or vertex of any two interconnecting vanes.

MW (megawatt) - Unit used to describe gross or net power generation of a particular facility. One watt equals one joule per second. One megawatt equals 10^6 watts.

New (as opposed to retrofit for FGD systems) - FGD unit and boiler were designed at the same time, or space for addition of an FGD unit was reserved when the boiler was constructed.

NO_x - A symbol meaning oxides of nitrogen (e.g., NO and NO_2).

NSPS (New Source Performance Standards) - Environmental regulations that apply to a new installation, referring primarily to the Federal NSPS that applies to installations beginning construction on or after August 17, 1971.

Opacity - The degree to which emissions reduce the transmission of light and obscure the view of an object in the background.

Open water loop - The water loop of an FGD system is open when the fresh makeup water added exceeds the evaporative water loss leaving via the stack and the water chemically or physically bonded to the sludge product.

Outage - That period of time when the boiler and/or FGD system is shut down for inspection and maintenance. Outages may be either forced or scheduled.

Overflow (also supernatant) - The clear liquor that is drawn from the top of settling tanks (e.g., thickener) or settling ponds.

Oxidation - A chemical reaction in which oxygen unites or combines with other elements or compounds in an FGD system (primarily with respect to the sulfite-sulfate reaction).

Packed-bed absorber - A piece of pollution equipment using small plastic or ceramic pieces, with high surface area-to-volume ratios, for intimate contact between liquid and gas for mass transfer of a pollutant.

Particulate matter - Finely divided solid particles entrained in the gas stream (fly ash, coal fines, dried reaction byproducts, etc.)

Peak load - A boiler that is normally operated to provide power during maximum load periods.

Perforated tray absorber - Pollution control equipment that passes the untreated gas through holes in a series of plates on which liquid flows, causing an intimate contact between phases by breaking the gas flow up into bubbles.

pH - The hydrogen ion concentration of a water or slurry to denote acidity or alkalinity.

pH meter - Electronic instruments which measure the potential difference between a reference half-cell electrode and an indicator electrode sensitive to hydrogen ions.

Plume (stack plume) - The visible emission from a flue (stack).

ppm (parts per million) - Units of concentration that in wastewater applications is equal to milligrams per liter and in air pollution applications is equal to moles of pollutant to million moles dilutent.

Preheater - Heat transfer apparatus through which ambient air is passed and heated by higher temperature boiler flue exhaust gases for boiler combustion.

Presaturator - An external vessel or section of incoming flue gas ductwork prior to the main scrubbing vessel where hot flue gas is presaturated.

Pressure drop - The difference in force per unit area between two points in a fluid stream, due to resistive losses in the stream.

Process additives - A chemical compound or element which is added to the process or normally found with the main process reagent in small quantities (e.g., Mg, adipic acid) to promote improved process operation (e.g., scale reduction, increased SO_2 removal efficiency).

Process type - The generic name for the FGD process based on the absorbent used (e.g., lime, limestone) except for a few specialized processes which are referred to by patented titles.

Pug mill - A mechanical device used for blending ash and/or other dry solid materials with FGD waste to enhance its handling characteristics for disposal purposes.

Quencher - The inlet portion of the main scrubbing vessel where hot flue gas is cooled and saturated.

Reagent - The substance which contains or produces the desired reactant reagent material utilized by an FGD process for pollutant removal (e.g., lime, limestone).

Reagent preparation equipment - Equipment and/or mechanical devices involved in the handling and preparation of the scrubber reagent (slakers, wet ball mills, pug mills, etc.).

Reagent utilization (also utilization) - That fraction of reagent material (e.g., lime, limestone) fed to the FGD system which is consumed (utilized) and chemically converted into product material (e.g., $CaSO_3$, $CaSO_4$, etc.).

Reheater - Device used to raise the temperature of the scrubbed gas stream to prevent condensation and corrosion of downstream equipment, avoid visible plume, and/or enhance plume rise and dispersion.

Relative humidity (also relative saturation) - The ratio of the weight (or mass) of water vapor present in a unit volume of gas to the maximum possible weight (or mass) of water vapor in unit volume of the same gas at the same temperature and pressure. The term "saturation" refers to any gas-vapor combination, while "humidity" refers specifically to an air-water system.

Removal efficiency:

Particulate matter - The actual percentage of particulate matter removed by the emission control system (mechanical collectors, ESP, or fabric filter and FGD) from the untreated flue gas.

SO_2 - The actual percentage of SO_2 removed from the flue gas by the FGD system.

Total unit design - The designed percentage of mass of SO_2 or particulate matter entering the stack to the mass of the material in the flue gas exiting the boiler regardless of the removal efficiency of an individual component or the percentage of the exiting flue gas actually being scrubbed.

Residence time - The amount of time a unit volume of gas or liquid spends in a pollution control device.

Retrofit - The FGD unit will be/was added to an existing boiler not specifically designed to accommodate an FGD system.

Rod deck absorber - Gas/liquid contacting device used for pollutant removal. Untreated flue gas is contacted countercurrently with slurry with mixing being aided by decks of cylindrical rods positioned perpendicular to the gas and liquor flows.

scfm (standard cubic feet per minute) - Units of gas flow rate at 60°F and 1 atmospheric pressure.

Saleable end product - Any material produced from the byproducts or inlet materials of an FGD process, the original purpose of which is pollutant removal, which can be resold (e.g., gypsum).

Saturated - The situation when a gas or liquid is filled to capacity with a certain substance. No additional amount of the same substance can be added under the given conditions.

Saturation temperature - The temperature to which flue gas drops when it is saturated by scrubbing in a wet FGD system.

Scale - Deposits of slurry solids (calcium sulfite or calcium sulfate) that adhere to the surfaces of FGD equipment, particularly absorber/scrubber internals and mist eliminator surfaces.

Scheduled outage - A planned period of time set aside periodically for inspection and maintenance of the boiler and/or FGD system.

Scrubber - A device that promotes the removal of pollutant particles and/or gases from exhaust streams of combustion or industrial processes by the injection of an aqueous solution or slurry into the gas stream.

Settling pond - Waste dewatering ponds which generally are not preceded by dewatering equipment. Absorber bleed is normally introduced at one end of the pond and supernatant drawn off at the other end and recycled back for absorber reuse. Settling ponds may or may not be final disposal areas.

Slaker - Mechanical devices which slake dry lime (calcium oxide) or magnesium oxide into calcium or magnesium hydroxide alkali.

Sludge - The material containing high concentrations of precipitated reaction byproducts and solid matter collected and/or formed by the FGD process (composed primarily of calcium-based reaction byproducts, excess scrubbing reagent, flyash, and scrubber liquor).

Sludge disposal (also waste disposal) - Removal of and discarding of non-saleable waste from an FGD system in the form of ponding, landfilling, mine filling, etc.

Sludge pond - Sludge dewatering ponds which generally are preceded by either dewatering equipment and/or settling ponds. The sludge pond is usually the final disposal area.

Slurry - A watery mixture of insoluble matter (usually lime or limestone).

SO_x - A symbol meaning oxides of sulfur (e.g., SO_2 and SO_3).

Spray tower - Gas/liquid contacting device used for pollutant removal. Untreated gas is contacted countercurrently, crosscurrently, or cocurrently with scrubber liquor via spray nozzles in a horizontal or vertical chamber.

Stabilization - Physical stabilization is accomplished by reducing the moisture content of the sludge by addition of non-alkaline flyash and/or using a vacuum filter or centrifuge to the point that structural properties are optimized when the material is disposed of in a landfill.

Stabilization pond - Sludge ponds containing stabilized sludge.

Stack flue - The inner duct or channel in a stack through which the flue gas is conveyed.

Stack gas velocity - The exiting velocity of the flue gas out the top of the stack.

Standard conditions - A set of physical constants for the comparison of different gas volume flow rates (60°F, 1 atmosphere pressure).

Stoichiometric ratio - A molar ratio of reactants in a chemical process; indicates to what extent lime (or other reagent) is added to the reaction in excess of the theoretical amount required.

Superficial gas velocity - The average flue gas velocity through a mist eliminator or other component of an FGD system.

Supernatant (also overflow) - The clear liquor that is drawn from the top of settling tanks (e.g., thickener) or settling ponds.

System supplier - A firm that fabricates and supplies flue gas desulfurization systems.

Temperature, dry-bulb - The temperature of a gas or mixture of gases indicated by an accurate thermometer after correction for radiation.

Temperature, wet-bulb - A measure of the moisture content of air (gas) indicated by a wet bulb psychometer.

Theoretical kWh production - Period hours multiplied by gross unit operating capacity in kilowatts.

Thickener - A continuous settling basin used to increase solids concentration from influent to underflow.

Throwaway end product - Those byproduct materials formed by FGD systems which have no resale value with or without additional processing.

Total controlled capacity (TCC) - The gross rating (MW) of a unit brought into compliance with FGD, regardless of the percent of flue gas treated at the facility.

Tray tower - Gas/liquid contacting device used for pollutant removal. Untreated gas enters the base of the tower and passes upward through trays containing openings countercurrent to downward cascading scrubber liquor introduced from above each tray.

Treatment - The specific type of dewatering preparation used on FGD waste material (sludge) to prepare it for final disposal (e.g., fixation, stabilization, vacuum filters, thickeners, etc.).

Turnaround - Common term referring to an annual scheduled outage period.

Turndown ratio - The ratio of maximum gas flow capacity of a absorber to the minimum it can handle without reducing SO_2 removal or causing unstable operation.

Underflow - Concentrated solids flow from the bottom of an absorber or thickener.

Unit rating:

> Gross - Maximum continuous generating capacity in MW.
> Net - Gross unit rating less the energy required to operate ancillary station equipment, inclusive of emission control systems.

Utilization (also reagent utilization) - That fraction of reagent material (e.g., lime, limestone, etc.) fed to the FGD system which is consumed (utilized) and chemically converted into product material (e.g., $CaSO_3$, $CaSO_4$).

Vacuum filter - A drum and belt-type machine that separates solids from slurry by use of vacuum pressure.

Wash water type - The nature of wash water spray utilized for mist eliminators (e.g., continuous, periodic).

Water loop - All aqueous mass flows from inlet (e.g., seal water, quench water, scrubber liquor) to outlet of an FGD system (e.g., evaporation via stack, pond evaporation, waste disposal).

Water losses - Water leaving the FGD system via the stack (evaporation), pond, and thickener or that is chemically or physically bonded to the waste disposal product.

Wet stack - Stacks equipped with special liners for handling the continual condensation of moisture contained in the exiting scrubbed flue gas.

Zero discharge - A pollution regulation requiring that no effluent waste stream be discharged back into the environment, with the exception of evaporation via ponds and stacks (e.g., pond runoff or direct piping of spent slurry or waste into nearby waterways or tributaries would be prohibited).

APPENDIX B
EQUATIONS FOR CONVERTING POLLUTANT CONCENTRATIONS TO NSPS UNITS

EQUATIONS FOR CONVERTING POLLUTANT CONCENTRATIONS (lb/ft^3) TO NSPS UNITS ($lb/10^6$ Btu)*

$$F_W = \frac{10^6\,[5.56(\%H)+1.53(\%C)+0.57(\%S)+0.14(\%N)-0.46(\%O_2)+0.21(\%H_2O)]}{GCV}$$

$$E = C_{WS} F_W \frac{20.9}{20.9\,(1 - B_{wa}) - \%\,O_{2W}}$$

Where:

F_W = Coal analysis factor on a wet basis, std. $ft^3/10^6$ Btu

GCV (Gross Caloric Value) = High heating value of coal, Btu/lb

E = Pollutant emission rate, $lb/10^6$ Btu

C_{WS} = Pollutant concentration given as a wet basis, lb/ft^3

B_{wa} = Ambient air moisture fraction

O_{2W} = Percent oxygen in flue gas on a wet basis

Note: Standard F_W factors for coal:

Bituminous - 10,680

Subbituminous - 11,500

Lignite - 12,000

*Refer to Section 3.1.1.4.

APPENDIX C

FGD SYSTEM INSPECTION CHECKLIST

FGD SYSTEM INSPECTION CHECKLIST

GENERAL INFORMATION

Utility/Plant Name _____ Date _____

Plant Address _____

Plant Representative _____ Phone No. _____

Plant Manager _____ Phone No. _____

Inspector Agency Name _____

Inspector Name _____ Phone No. _____

PLANT DATA (Table 4.1-1)

Boiler Data

- Type of firing (pulverized, cyclone) _____
- Boiler service load (base, intermediate, cyclic, peak) _____
- Date of commercial operation (month, year) _____
- SO_2 emission limitation, $lb/10^6$ Btu _____
- Particulate emission limitation, $lb/10^6$ Btu _____
- Opacity limitations, % _____
- Fuel firing rate at maximum continuous rating, tons/hr _____
- Heat rate, Btu/net kWh _____
- Average capacity factor, % _____
- Gross generating capacity, MW _____
- Outlet flue gas flow, acfm _____
- Outlet flue gas temperature, °F _____

Fuel Data	Design	Actual
° Average heat content, Btu/lb	_____	_____
° Average ash content, %	_____	_____

Fuel Data (continued)

	Design	Actual
° Average moisture content, %		
° Average sulfur content, %		
° Average chlorine content, %		

General FGD System Data

- ° FGD process type (lime, limestone) _____
- ° Generation type (first, second, or third) _____
- ° Application (new/retrofit) _____
- ° Initial startup date _____
- ° Commercial startup date _____
- ° Total system design SO_2 removal efficiency, % _____
- ° Percent flue gas bypassing FGD system, % _____
- ° Total system energy consumption, kWh _____
- ° Annual reagent consumption, tons/year _____
- ° Water loop type (open, closed) _____
- ° Waste disposal type (landfill, pond) _____
- ° Solid waste generation rate (dry), tons/hr _____
- ° Total system makeup water consumption, gpm _____
- ° Number of operators per shift _____
- ° Number of maintenance personnel per shift _____
- ° Maintenance philosophy (dedicated, rotated, pooled) _____

CONTROL ROOM (Table 4.2-1)

Observation

- ° Operator indicated location of FGD monitors? ___ Yes ___ No
- ° All monitors operational? ___ Yes ___ No

Operation and Maintenance

- ° Reason/corrective action regarding non-operational FGD monitors.

_____

_____

_____

_____

Operation and Maintenance (continued)

° Emission Readings	Design	Actual
° SO_2, ppm	_____	_____
° Particulate, gr/scf	_____	_____
° Opacity, %	_____	_____

° Facility has computerized control with CRT displays. ___ Yes ___ No

° CRT Readings

_____

_____

_____

_____

GAS HANDLING AND TREATMENT

FAN (Table 4.2-2)

Observation

° Excessive fan vibrations [ ] Yes [ ] No. If yes, note readings and inquire why.

_____

_____

_____

_____

° Signs of debris/maintenance.

_____

_____

_____

_____

° Signs of corrosion/location.

_____

_____

_____

_____

Process

° Fan function, design application service, and location.

Unit/booster _____ Centrifugal/axial _____

ID/FD _____ Wet/dry _____

	Design	Actual
° Fan ΔP, in. H_2O	_____	_____
° Fan gas flow rate, acfm	_____	_____
° Fan gas temperature, °F	_____	_____
° Fan energy consumption rate, kW	_____	_____

Operation and Maintenance

° Fan failure incidences/causes/remedial actions.

_____

_____

_____

_____

° Routine maintenance procedures/inspection schedules.

_____

_____

_____

_____

SCRUBBER/ABSORBER (Table 4.2-3)

Observation

° Signs of debris/maintenance.

_____

_____

_____

_____

Observation (continued)

- Signs of materials failure/location.

_____

_____

_____

_____

- Signs of leaky piping.

_____

_____

_____

_____

- Signs of leaks on absorber vessel walls.

_____

_____

_____

_____

Process	Design	Actual
° Inlet particulate grain loading, gr/scf	_____	_____
° Outlet particulate grain loading, gr/scf	_____	_____
° Inlet SO_2 concentration, ppm	_____	_____
° Outlet SO_2 concentration, ppm	_____	_____
° Absorber L/G, gal/1000 acfm	_____	_____
° Absorber ΔP, in. H_2O	_____	_____
° Slurry solids content in absorber reaction tank, %	_____	_____
° Slurry pH in absorber reaction tank	_____	_____

Operation and Maintenance

- Absorber failure incidences/causes/remedial actions.

_____

_____

_____

_____

Operation and Maintenance (continued)

° If idle, inquire why and inspect internals (if possible).

° Absorber instrumentation problems/causes/remedial actions.

° Routine maintenance procedures/inspection schedules.

MIST ELIMINATOR (Table 4.2-4)

Observation

° Discarded sections/causes of failure.

° If idle, inspect installed mist eliminator section for:

	Yes	No
Plugging/scaling	____	____
Breakage	____	____
Deformation	____	____
Erosion/corrosion	____	____

° Signs of mist eliminator carryover in downstream equipment.

Process	Design	Actual
° Mist eliminator ΔP, in. H_2O	_____	_____
° Absorber pH	_____	_____
° Mist eliminator flue gas velocity, ft/s	_____	_____

Operation and Maintenance

° Washing techniques utilized [ ] Automatic [ ] Manual.

_____

_____

_____

_____

° Wash water source/water loop type/problems.

_____

_____

_____

_____

° Mist eliminator failure incidences/causes/remedial actions.

_____

_____

_____

_____

° Routine maintenance procedures/inspection schedules.

_____

_____

_____

_____

REHEATER (Table 4.2-5)

Observation

° If idle, check for excessive scaling/plugging (if possible).

_____

_____

_____

_____

Observation (continued)

- Discarded reheater tubes/causes of failure.

_____

_____

_____

_____

- If operational, check nearby ductwork for corrosion caused by reheater malfunctions.

_____

_____

_____

_____

Process

	Design	Actual
° In-line reheater ΔP, in. H_2O	_____	_____
° Reheater energy consumption rate, kW	_____	_____
° Reheater inlet temperature, °F	_____	_____
° Reheater outlet temperature, °F	_____	_____

- Is reheater outlet temperature above acid dew point? [ ] Yes [ ] No.

Operation and Maintenance

- In-line tube failure incidences/causes/remedial actions.

_____

_____

_____

_____

- Tube type/baffle and materials of construction.

_____

_____

_____

_____

- Plugging problems encountered with in-line reheaters.

_____

_____

_____

_____

Operation and Maintenance (continued)

- Reheater failure incidences/causes/remedial actions.

- Cleaning techniques utilized [ ] Automatic [ ] Manual.

- Routine maintenance procedures/inspection schedules.

DUCTWORK/DAMPER (Table 4.2-6)

Observation

- Signs of ductwork/damper corrosion/severity and location.

- Check for ruptured expansion joints/location.

- Newly installed ductwork/reasons for replacement.

Observation (continued)

- Does actual bypass ducting agree with original system design? [ ] Yes [ ] No. If no, inquire why.

- Is ductwork insulated? [ ] Yes [ ] No.

- Note ductwork shape and configuration/associated problems.

Process

- Process conditions (e.g., gas flow, gas temperature) to which troublesome ductwork/dampers are subject to.

- Is ductwork lined? [ ] Yes [ ] No. If yes, what materials of construction are used?

- Ductwork/damper problems due to mist eliminator carryover/causes/ remedial actions.

Operation and Maintenance (continued)

- Ductwork failure incidences/causes/remedial actions.

- Damper failure incidences/causes/remedial actions.

- Ductwork/damper problems due to improper installation and/or materials of construction/remedial actions.

- Are dampers equipped with seal air? [ ] Yes [ ] No. If no, note any isolation problems.

- Damper problems due to fly ash or solids accumulation.

- Routine maintenance procedures/inspection schedules.

REAGENT HANDLING AND FEED

REAGENT CONVEYOR (Table 4.2-7)

Observation

- Signs of belt misalignment, tears, or frayed edges.

- Signs of leaks on pneumatic conveyor lines.

- Signs of bucket elevator debris/jamming/maintenance.

- Conveyor duties/problems.

Operation and Maintenance

- Conveyor failure incidences/causes/remedial actions.

Operation and Maintenance (continued)

- Conveyor failures caused by reagent quality/weather.

- Routine maintenance procedures/inspection schedules.

BALL MILL (Table 4.2-8)

Observation

- Signs of discarded balls/maintenance.

Process

- Failures caused by poor reagent quality/undersizing.

- Water source/problems.

Operation and Maintenance

- Ball mill failure incidences/causes/remedial actions.

- Routine maintenance procedures/inspection schedules.

SLAKER (Table 4.2-9)

Observation

- Is slaker operational? [ ] Yes [ ] No. If no, inquire why.

Process

- Dry reagent feed rate of slaker, tons/hr. [ ] Actual [ ] Design.
- Slaker capacity problems/causes.

- Failure caused by poor reagent quality.

Process (continued)

° Water source/problems.

Operation and Maintenance

° Problems associated with slaker support equipment.

° Slaker failure incidences/causes/remedial actions.

° Routine maintenance procedures/inspection schedules.

TANKS (Table 4.2-10)

Observation

° Signs of tank repairs/maintenance.

Observation (continued)

- Note tank configuration/associated failures.

- Note if tanks are covered or open.

- If open, check for floating debris/associated failures.

- Signs of slurry leakage.

Operation and Maintenance

- Tank(s) drained to repair liners/bafflers.

- Problems associated with tank support equipment.

Operation and Maintenance (continued)

° Tank failure incidences/causes/remedial actions.

° Routine maintenance procedures/inspection schedules.

WASTE SOLIDS HANDLING AND DISPOSAL

THICKENER (Table 4.2-11)

Observation

° Signs of thickener repairs/reason for repairs.

° Signs of slurry leakage.

° Are thickeners covered? [ ] Yes [ ] No.

° If not covered, check for debris/associated failures.

Process

	Design	Actual
° Overflow rate, gpm	_____	_____
° Underflow rate, gpm	_____	_____
° Solids content in underflow, %	_____	_____
° Sulfite/sulfate ratio of inlet slurry	_____	_____

° How is thickener overflow used?/rate (gpm).

_____

_____

_____

_____

Operation and Maintenance

° Is thickener rake drive shaft and motor equipped with a torque control alarm system? [ ] Yes [ ] No.

° Problems with rake binding or rake drive shaft/motor failure.

_____

_____

_____

_____

° Problems with sump failures.

_____

_____

_____

_____

° Problems with liner failures.

_____

_____

_____

_____

° Thickener failure incidences/causes/remedial actions.

_____

_____

_____

_____

Operation and Maintenance (continued)

- Routine maintenance procedures/inspection schedules.

VACUUM FILTER (Table 4.2-12)

Observation

- Inspect filter cloth for tears.
- Check for spare or discarded filter cloths.
- Check filter cake consistency/product quality.

Process	Design	Actual
° Filter cake production rate, tons/hr		
° Solids content of filter cake, %		
° Inlet slurry solids content, %		
° Wastewater effluent production rate, gpm		
° Sulfite/sulfate ratio in filter cake		

Process (continued)

- Inlet slurry solids content adequate? [ ] Yes [ ] No.
- How is the vacuum filter filtrate used?/rate (gpm)

Operation and Maintenance

- Problems/failures associated with vacuum filtrate pump.
- Problems regarding filter cloth replacement.
- Filter cake conveyor failures.
- Vacuum filter failure incidences/causes/remedial actions.
- Routine maintenance procedures/inspection schedules.

CENTRIFUGE (Table 4.2-13)

Observation

- Centrifuge(s) operational? [ ] Yes [ ] No. If no, inquire why.

_____

_____

_____

_____

- Check centrifuge cake consistency/product quality.

_____

_____

_____

_____

Process

	Design	Actual
° Filter cake production rate, tons/hr	_____	_____
° Solids content of filter cake, %	_____	_____
° Inlet slurry solids content, %	_____	_____
° Wastewater effluent production rate, gpm	_____	_____
° Sulfite/sulfate ratio in filter cake	_____	_____

- Inlet slurry solids content adequate? [ ] Yes [ ] No.
- How is the centrifuge filtrate used?/rate (gpm)

_____

_____

_____

_____

Operation and Maintenance

- Problems due to support equipment factors.

_____

_____

_____

Operation and Maintenance (continued)

- Centrifuge failure incidences/causes/remedial actions.

- Routine maintenance procedures/inspection schedules.

WASTE PROCESSING SYSTEM (Table 4.2-14)

Process

- Type of waste processing system:
  [ ] forced oxidation [ ] fixation [ ] stabilization [ ] none
- What is the energy consumption rate? Is this typical or excessive?

Operation and Maintenance

- Problems associated with the equipment area.

- Waste processing failure incidences/causes/remedial actions.

Operation and Maintenance (continued)

° Routine maintenance procedures/inspection schedules.

_____

_____

_____

_____

WASTE DISPOSAL SYSTEM (Table 4.2-15)

Process

° Type of water loop [ ] open [ ] closed

° Type of waste disposal system [ ] ponding [ ] landfilling [ ] stacking (gypsum)

° If ponding is used, how much waste water is returned back to system (gpm)?/quality of water.

_____

_____

_____

_____

Operation and Maintenance

° Waste disposal failure incidences/causes/remedial actions.

_____

_____

_____

_____

° Routine maintenance procedures/inspection schedules.

_____

_____

_____

_____

PUMP AND VALVE (Table 4.2-16)

Observation

- Check for discarded pump impellers and liners/note appearance.

- Signs of leaky pump seals, bearings, etc.

- Excessive pump vibrations [ ] Yes [ ] No. If yes, inquire why.

- Locate and inspect abrupt expansion, contraction, and bends in piping around valves/note any problems.

Process

- Process conditions associated with failure-prone pumps/valves.

Process (continued)

- Energy consumption rate of absorber recycle pumps, kW.
  Design _____ Actual _____
- Inquire about pump redundancy for different operations.

_____

_____

_____

_____

Operation and Maintenance

- Pump failure incidences/causes/remedial actions.

_____

_____

_____

_____

- Valve failure incidences/causes/remedial actions.

_____

_____

_____

_____

- Routine maintenance procedures/inspection schedules.

_____

_____

_____

_____

☆ U.S. GOVERNMENT PRINTING OFFICE: 1985 - 559-111/20706