EP
GR

Development Document for Interim Final Effluent Limitations Guidelines and New Source Performance Standards for the

SIGNIFICANT ORGANIC PRODUCTS

Segment of the

ORGANIC CHEMICAL MANUFACTURING

Point Source Category

UNITED STATES ENVIRONMENTAL PROTECTION AGENCY
NOVEMBER 1975

DEVELOPMENT DOCUMENT

for

INTERIM FINAL EFFLUENT LIMITATIONS

and

NEW SOURCE PERFORMANCE STANDARDS

for the

SIGNIFICANT ORGANIC PRODUCTS SEGMENT

of the

ORGANIC CHEMICALS MANUFACTURING

POINT SOURCE CATEGORY

Russell E. Train
Administrator

Andrew W. Breidenbach, Ph.D.
Acting Assistant Administrator
for Water and Hazardous Materials

Allen Cywin, Director
Effluent Guidelines Division

John A. Nardella, Project Officer
Effluent Guidelines Division

November, 1975

Effluent Guidelines Division
Office of Water and Hazardous Materials
U.S. Environmental Protection Agency
Washington, D.C. 20460

ABSTRACT

A study of the significant organic products segment of the organic chemicals manufacturing industry was conducted by Roy F. Weston, Inc. for the United States Environmental Protection Agency. The purpose of this study was to establish effluent limitations guidelines for existing point-source discharges and standards of performance and pretreatment standards for new sources. This study and proposed regulations were undertaken in fulfillment of Sections 301, 304, 306, and 307 of the Federal Pollution Control Act Amendments of 1972.

For the purposes of this study, 55 product/process segments of the industry were investigated. Effluent limitations guidelines were developed for 27 of these product/process segments. Other 28 product/processes are currently being reviewed to determine the possible economic impact and will be published at a later date. This study was the second part of a two phase effort. In the first phase, process raw waste loads and effluent limitations guidelines were established for 40 product/process groups. Coverage of the industry has now been extended to include 67 product/process segments.

In this studies, product/process groups were subcategorized into four major subcategories. Effluent limitations and guidelines were then determined for each product/process by multiplying the raw waste load by an appropriate reduction factor or concentration. The resultant limit is considered a long term or design limit. In order to convert the design limit to the daily maximum and 30 day maximum average the design limit is multiplied by an appropriate variability factor.

Supportive data and the rationale for development of the proposed effluent limitations guidelines and standards of performance are contained in this report.

CONTENTS

Section		Page
I	CONCLUSIONS	1
II	RECOMMENDATIONS	5
III	INTRODUCTION	21
IV	INDUSTRY CATEGORIZATION	41
V	WASTE CHARACTERIZATION	255
VI	SELECTION OF POLLUTANT PARAMETERS	261
VII	CONTROL AND TREATMENT TECHNOLOGIES	291
VIII	COST, ENERGY AND NONWATER QUALITY ASPECTS	341
IX	BEST PRACTICABLE CONTROL TECHNOLOGY CURRENTLY AVAILABLE (BPCTCA)	345
X	BEST AVAILABLE TECHNOLOGY ECONOMICALLY ACHIEVABLE (BATEA)	355
XI	NEW SOURCE PERFORMANCE STANDARDS-BEST AVAILABLE DEMONSTRATED CONTROL TECHNOLOGY (BADCT)	359
XII	PRETREATMENT GUIDELINES	363
XIII	VARIABILITY IN TREATMENT PLANT PERFORMANCE	367
XIV	ACKNOWLEDGMENTS	371
XV	BIBLIOGRAPHY	373
XVI	GLOSSARY AND ABBREVIATIONS	385

FIGURES

Figure	Title	Page
	Flow Diagrams	
4-1	Cumene	48
4-2	p-Xylene	50
4-3	Chlorobenzene	54
4-4	Chlorobenzene (incl. dichlorobenzene)	55
4-5	Chlorinated Methanes	59
4-6	Chlorotoluene	62
4-7	Diphenylamine	65
4-8	Perchloroethylene	69
4-9	Phthalic Anhydride (o-Xylene)	73
4-10	Phtnalic Anhydride (Naphthalene)	77
4-11	Hexamethylenediamine (Adiponitrile)	81
4-12	Hexamethylenediamine (Hexanediol)	85
4-13	Methyl Ethyl Ketone	89
4-14	Tricresyl Phosphate	92
4-15	Adiponitrile	96
4-16	Benzoic Acid and Benzaldehyde	101
4-17	Methyl Chloride	105
4-18	Maleic Anhydride	108
4-19	Acetic Esters	113
4-20	Propylene Glycol	118
4-21	Caprolactam (DSM)	121
4-22	Cyclohexanone Oxime	125

	Figures	Page
4-23	Formic Acid	131
4-24	Isopropanol	134
4-25	Oxalic Acid	138
4-26	Calcium Stearate	141
4-27	Hexamethylene Tetramine (Plant 1)	144
4-28	Hexamethylene Tetramine (Plant 2)	145
4-29	Hydrazine	149
4-30	Isobutylene	152
4-31	Sec-Butyl Alcohol	155
4-32	Acrylonitrile	158
4-33	Cresol	161
4-34	p-Aminophenol	165
4-35	Propylene Oxide	169
4-36	Pentaerythritol	173
4-37	Saccharin	176
4-38	o-Nitroaniline	179
4-39	p-Nitroaniline	182
4-40	Pentachlorophenol	185
4-41	Fatty Acids and Primary Derivatives	192
4-42	Ionone and Methylionone	207
4-43	Methyl Salicylate	210
4-44	Citronellol and Geraniol	214
4-45	Plasticizers	217
4-46	Pigments	231
4-47	Citric Acid	234

	Figures	Page
4-48	Naphthenic Acid	239
4-49	Monosodium Glutamate	242
4-50	Tannic Acid	247
4-51	Vanillin	251
7-1	BPCTCA Waste Treatment Model	335
7-2	BATEA Waste Treatment Model	336

TABLES

Table	Title	Page
2-1	Subcategories of the Secondary Organic Products Segmentof the Organic Chemicals Manufacturing Industry	7
2-2	Effluent Limitations for Best Practicable Control Technology Currently Available (BPCTCA)	10
2-3	Effluent Limitations for Best Available Technology Economically Achievable (BATEA)	13
2-4	Standards of Performance for New Organic Chemicals Manufacturing Sources	17
3-1	Chemicals Listed under SIC Code 2865	24
3-2	Chemicals Listed under SIC Code 2869	27
4-1	Process Raw Waste Load Based on DSM Process	128
4-2	Process Raw Waste Load Based on DSM Process	129
4-3	Some Examples of Commercial Fatty Acids Showing Typical Percentage of Constituent Acids	189
4-4	Chemical Conversions and Unit Operations Contributing to Process Raw Waste Loads for the Manufacture of Fatty Acids and Primary Derivatives	202
4-5	Process RWL Associated with Manufacture of Fatty Acids	204
4-6	Process RWL Associated with Manufacture of Primary Derivatives from Fatty Acids	205
4-7	RWL Data for Batch Chemical Complex	212
4-8	Usage Classification of Dyes	221

	Tables	Page
4-9	Chemical Classification of Dyes	223
4-10	U.S. Production of Dyes by Classes of Application, 1965	224
4-11	U.S. Production and Sales of Dyes by Chemical Classification, 1964	225
5-1	Subcategory A - Product-Process Raw Waste Loads	257
5-2	Subcategory B - Product-Process Raw Waste Loads	257
5-3	Subcategory C - Product-Process Raw Waste Loads	258
5-4	Subcategory D - Product-Process Raw Waste Loads	259
6-1	List of Pollutants Analyzed for the Organic Chemicals Industry	262
6-2	Miscellaneous RWL for Subcategory A	269
6-3	Miscellaneous RWL for Subcategory B	270
6-4	Miscellaneous RWL for Subcategory C	273
6-5	Miscellaneous RWL for Subcategory D	275
7-1	Organic Chemicals Study Treatment Technology Survey	299
7-2	Historic Treatment Plant Performance 50 Percent Probability of Occurrence	321
7-3	Treatment Plant Survey Data	322
7-4	Effectiveness of Filtration Test on Biological Treatment Effluent	328
7-5	Organic Chemical Plants Using Activated Carbon to Treat Raw Wastewaters	330
7-6	Summary COD Carbon Isotherm Data	331

Tables		Page
7-7	Summary TOC Carbon Isotherm Data	332
7-8	Summary TOC and COD Carbon Exhaustion Rates	333
8-1	Summary of Waste Treatment Costs for BPCTCA, BATEA, and BADCT	342
9-1	Development of Effluent Limitations for the Secondary Organic Products Segment of the Organic Chemicals Point Source Category by Application of the Best Practicable Control Technology Currently Available (BPCTCA)	353
10-1	Development of Effluent Limitations for the Secondary Organic Products Segment of the Organic Chemicals Point Source Category by Application of the Best Available Technology Economically Achievable (BATEA)	358
11-1	Development of Standards of Performance for the Secondary Organic Products Segment of the Organic Chemicals Point Source Category by Application of the Best Available Demonstrated Control Technology	361
12-1	Pretreatment Unit Operations for the Organic Chemicals Industry	365

SECTION I

CONCLUSIONS

The complex task of establishing effluent guidelines limitations for the organic chemicals industry required that the industry be divided into a two-phase study. The final Phase I development document was issued in April 1974. That document recommended the use of process-oriented subcategories which were developed as follows:

Continuous Nonaqueous Processes (Phase I Subcategory A)

Contact between water and reactants or products is minimal. Water is not required as either reactant or diluent, and is not formed as a reaction product. The only water usage stems from periodic washes or catalyst hydration.

Continuous Vapor Phase Processes Where Contact Process Water is used as Diluent, Quench or Vent Gas Absorbent (Phase I Subcategory B)

Process water is generated through the use of diluent steam, product quench or vent gas absorption. Process reactions are all vapor-phase over solid catalysts. Most processes use a vent gas absorber, coupled with steam stripping of chemicals for purification and recycle of the absorber water.

Continuous Aqueous Liquid-Phase Reaction Systems (Phase I Subcategory C)

Process reactions are liquid-phase, with the catalyst in the aqueous medium. Continuous regeneration of the catalyst requires extensive water usage, and substantial removal of spent catalyst and inorganic by-products may be required. Additional process water is involved in final purification and/or neutralization of products.

Batch and Semi-Continuous Processes (Deleted from Phase I but covered under Phase II)

Many reactants are in the liquid-phase with aqueous catalyst systems. Requirement for very rapid process cooling necessitates provisions for the direct addition of contact quench water or ice. Reactants and products are transferred from one piece of equipment to another by gravity flow, pumping, or pressurization. Much of the materials handling is manual, and there is only limited use of automatic

process control. Filter presses and centrifuges are commonly used for solid-liquid separations, and air or vacuum ovens are used for drying. Cleaning of non-continuous production equipment constitutes a major source of waste water.

The criteria established for these four industry subcategories was also used in the Phase II study. The 40 product/process segments covered in the Phase I study were further subcategorized into seven subgroups: A, B1, B2, C1, C2, C3, and C4. Effluent limitations were then calculated on the basis of the mean subcategory group raw waste load. In the Phase II study, the effluent limitations were established on the individual product/process raw waste load rather than on the mean for the subcategory group. Twenty-seven product/process segments of the 55 product/processes investigated were selected for establishment of effluent limitations. A preliminary economic analysis indicated that there may be a possible adverse impact for 19 product/processes. More detailed analysis is currently underway to firmly establish the extent of any possible impact and the possibility of establishing effluent limitations in the future. For seven other product/processes, the data base was not considered satisfactory to support effluent limitations at this time.

Many RWL parameters were considered during the study, and specific pollutants which might be inhibitory or incompatible with biological treatment systems were cited in Section VI. Effluent limitations and standards for cyanide were established for hexamethylenediamine, adiponitrile and acrylonitrile product/processes. Total copper limitations were also established for the plasticizers segment.

End-of-process treatment for the 1977 standard is defined as equivalent to biological treatment as typified by current exemplary processes such as activated sludge, trickling filters, aerated lagoons, and anaerobic lagoons. These systems may require pH control and equalization in order to control variable waste loads, and also will require good clarification with the addition of chemicals to aid in removing suspended solids. These systems do not preclude the use of equivalent chemical-physical systems such as activated carbon. Additionally, suitable in-process controls may be needed for the control of those pollutants which may be inhibitory to the biological waste treatment system and for possible reduction of raw waste loads.

Best available technology economically achievable, BATEA, (1983 Standard) is based on the addition of activated carbon

treatment following biological treatment. This technology permits substantial reductions of dissolved organic pollutants which are biorefractory as well as many which are biodegradable. The application of exemplary in-process systems is also considered to be applicable to this technology. End-of-process activated carbon treatment does not preclude the use of such treatment as an in-process technology.

End-of-process technology for new sources utilizing the best available demonstrated control technology (BADCT) is defined as equivalent to biological treatment with suspended solids removal via clarification, sedimentation, sand, or dual-media filtration. In addition, the use of exemplary in-process controls are assumed to be applicable, particularly where biotoxic pollutants must be controlled. This technology does not preclude the use of equivalent chemical-physical systems such as activated carbon as either an in-process or end-of-process treatment. The use of chemical-physical systems may be necessary in areas where land availability is limited.

Time based effluent limitations were derived as the maximum parameter value for any one day and the maximum average of daily values for any period of thirty consecutive days. The factors used in deriving these time-based limitations were determined from long-term performance (i.e. daily, weekly, monthly) from the best treatment systems evaluated. Time based limitations consider the normal variations of exemplary designed and operated waste treatment systems and include allowances for expected variation by use of suitable variability factors.

SECTION II

RECOMMENDATIONS

Effluent limitations defining best practicable control technology currently available are presented for each industrial subcategory of the organic chemicals manufacturing industry. Product-process segments of the industry which were covered in this study are listed in Table 2-1. Those product/process segments for which effluent limitations and guidelines are recommended are indicated in Table 2-1 as well as the 28 product/processes for which effluent limitations and guidelines are not proposed at this time. Effluent limitations for the 1977 Standards (BPCTCA) are shown in Table 2-2 for the 27 designated product/processes. Process waste waters subject to these limitations include all contact process water but do not include noncontact sources such as boiler and cooling water blowdown, and other similar sources.

Implicit in BPCTCA RWL data is the segregation of noncontact waste waters from process waste waters and the maximum utilization of applicable in-plant pollution abatement technology in order to minimize capital expenditures for end-of-pipe waste water treatment facilities.

End-of-process technology for BPCTCA involves the application of the equivalent of biological treatment as typified by activated sludge, trickling filters, aerated lagoons, or anaerobic lagoons. Equalization with pH control and oil separation may be required in order to provide optimal as well as a uniform level of treatment. Chemical flocculation aids, when necessary, should be added to the clarification system in order to control suspended solids levels.

Effluent limitations to be attained by the application of the best available technology economically achievable are presented in Table 2-3 for the 27 designated product/process segments listed in Table 2-1. End-of- process treatment for BATEA includes the addition of activated carbon systems to biological waste treatment processes. Exemplary in-process controls, as discussed in the later sections of this document, are also included in this technology. It is emphasized that the model treatment system does not preclude the use of activated carbon or other suitable in-process control systems within the plant. Such systems are frequently employed for recovery of products, by-products, and catalysts.

The best available demonstrated control technology for new sources includes the most exemplary process controls, as previously enumerated, with biological waste treatment and systems for the removal of suspended solids. New source standards for the 27 designated product/process segments are presented in Table 2-4.

TABLE 2-1

Subcategories of the Organic Chemicals Manufacturing Industry (Phase II - Significant Product-Processes)

Nonaqueous Processes Subcategory

Products	Process Descriptions
BTX aromatics[1]	Fractional distillation
Cumene[1]	Alkylation of benzene with propylene
p-Xylene[1]	Isomerization, crystallization and filtration of mixed xylenes

Processes With Process Water Contact only as Steam Diluent Product Quench or Vent Gas Absorbent Subcategory

Chlorobenzene[2]	Chlorination of benzene
Chloromethanes[1]	Chlorination of methyl chloride and methane mixture
Chlorotoluene[2]	Chlorination of toluene
Diphenylamine[1]	Deamination of aniline
Perchloroethylene[2]	Chlorination of chlorinated hydrocarbons
Phthalic anhydride[2]	Oxidation of naphthalene
Phthalic anhydride[1]	Oxidation of o-xylene
Hexamethylenediamine[1]	Hydrogenation of adiponitrile
Hexamethylenediamine[1]	Ammonolysis of 1, 6 hexanediol
Methyl ethyl ketone[1]	Dehydrogenation of sec-butyl-alcohol
Tricresyl phosphate[2]	Condensation of cresol and phosphorus oxychloride
Adiponitrile[1]	Chlorination of butadiene
Benzoic acid and[1] benzaldehyde	Catalytic oxidation of toluene with air
Methyl chloride[2]	Esterification of methanol with hydrochloric acid
Maleic anhydride[1]	Oxidation of benzene

Aqueous Liquid Phase Reaction Systems Subcategory

Ethyl acetate[1]	Esterification of ethyl alcohol with acetic acid
Propyl acetate[2]	Esterification of propyl alcohol with acetic acid
Propylene glycol[2]	Hydrolysis of propylene oxide
Cyclohexanone oxime[2]	Hydroxylamine process
Formic acid[2]	Hydrolysis of formaldehyde
Isopropanol[1]	Hydrolysis of propylene
Oxalic acid[2]	Nitric acid oxidation of carbohydrates
Calcium stearate[1]	Neutralization of stearic acid
Hexamethylenetetramine[2]	Ammonia systhesis
Hydrazine solutions[1]	Raschig process
Isobutylene[1]	Extraction from C4 BTX hydrocarbon mixture
Sec-butyl alcohol[1]	Sulfonation and hydrolysis of mixed butylenes
Acrylonitrile[1]	Ammoxidation of propylene
Synthetic cresol[2]	Methylation of phenol
Caprolactam[2]	DSM process
p-Aminophenol[1]	Catalytic reduction of nitrobenzene
Propylene oxide[2]	Chlorohydrin process
Pentaerythritol[2]	Aldehyde condensation
Saccharin[2]	Synthesis from phthalic anhydride derivatives

Batch and Semi-Continuous Processes

o-Nitroaniline[1]	Ammonolysis of o-nitro-chlorobenzene
p-Nitroaniline[1]	Ammonolysis of p-nitro-chlorobenzene
Pentachlorophenol[2]	Chlorination of phenol
Fatty acids[2]	Hydrolysis of tall oil, animal tallow and grease, vegetable oils and soap stocks

Fatty acid derivatives[2]	Esterification, ammination of fatty acids
Ionone and methyl-ionone[1]	Condensation and cyclization of Citral
Methyl salicylate[1]	Esterification of salicylic acid with methanol
Miscellaneous batch chemicals[2]	Numerous batch processes in an organic chemical complex
Citronellol and Geraniol[1]	Citronella oil distillation
Plasticizers[1]	Condensation of phthalic anhydride
Dyes and dye intermediates[2]	Numerous batch processes
Pigments, Toners[2]	Diazotization and coupling of amine, sulfuric acid etc.
Pigments, Lakes[2]	Diazotization and coupling of amine, sulfuric acid,
Citric Acid[2]	Fermentation of molasses
Napthenic acid[2]	Extraction and acidulation of caustic sludge from petroleum refinery
Monosodium glutamate[2]	Fermentation of beet sugar molasses
Tannic acid[1]	Extraction of natural vegetable matter
Vanillin[2]	Alkaline oxylation of spent sulfite liquor

1 - Effluent limitations proposed.
2 - Effluent limitations not proposed pending further analysis of technical and/or economic data.

Table 2-2

Effluent Limitations for the Best Practicable Control Technology Currently Available (BPCTCA) Organic Chemicals Manufacturing Industry - Phase II, Significant Organic Products Segment

Effluent Characteristic	Effluent Limitations kg/kkg production or lb/1,000 lb production	
	Maximum for any one day	Average of daily values for thirty consecutive days shall not exceed
Subcategory A - Nonaqueous Processes		
BTX Aromatics (Fractional distillation)		
BOD_5	0.0039	0.0021
TSS	0.0055	0.0029
Cumene		
No discharge of process waste water pollutants		
p-Xylene		
BOD_5	0.0035	0.0019
TSS	0.0052	0.0028
Subcategory B - Processes with Process Water Contact only as Steam Diluent, Quench or Vent Gas Absorbent		
Chloromethanes		
BOD_5	0.22	0.12
TSS	0.33	0.18
Diphenylamine		
BOD_5	0.041	0.021
TSS	0.062	0.033
Phthalic Anhydride (oxidation of o-xylene)		
BOD_5	0.046	0.025
TSS	0.069	0.038

Table 2-2 (continued)

Hexamethylenediamine (adiponitrile process)		
BOD5	0.16	0.084
TSS	0.12	0.063
Cyanide	0.0010	0.00050
Hexamethylenediamine (hexanediol process)		
BOD5	0.16	0.084
TSS	0.13	0.069
Cyanide	0.0011	0.00055
Methyl ethyl ketone		
BOD5	0.16	0.082
TSS	0.16	0.082
Adiponitrile		
BOD5	1.1	0.61
TSS	1.1	0.61
Cyanide	0.0098	0.0049
Benzoic Acid & Benzaldehyde		
BOD5	1.0	0.55
TSS	0.33	0.18
Maleic Anhydride		
BOD5	4.2	2.3
TSS	0.27	0.15
Subcategory C - Aqueous Liquid Phase Reaction Systems		
Ethyl Acetate		
BOD5	0.10	0.055
TSS	0.16	0.082
Isopropanol		
BOD5	0.27	0.15
TSS	0.29	0.16
Calcium Stearate		
BOD5	4.2	2.3
TSS	6.3	3.4
Hydrazine		
BOD5	0.37	0.20
TSS	0.37	0.20
Isobutylene		
BOD5	2.4	1.3
TSS	2.4	1.3

Table 2-2 (continued)

Sec Butyl Alcohol		
BOD5	0.55	0.29
TSS	0.074	0.040
Acrylonitrile		
BOD5	1.6	0.82
TSS	0.51	0.27
Cyanide	0.0045	0.0022
p-Aminophenol		
BOD5	1.6	0.88
TSS	1.5	0.80
Subcategory D - Batch and Semi-Continuous Processes		
o-Nitroaniline		
BOD5	21	12
TSS	31	17
p-Nitroaniline		
BOD0	3.0	1.7
TSS	4.6	2.5
Ionone and Methylionone		
BOD5	1.1	0.59
TSS	1.1	0.59
Methyl Salicylate		
BOD5	0.87	0.46
TSS	0.19	0.11
Citronellol and Geraniol		
BOD5	2.2	1.3
TSS	1.2	0.63
Plasticizers		
BOD5	2.1	1.2
TSS	0.076	0.041
Total Copper	0.00065	0.00032
Tannic Acid		
BOD5	6.0	3.2
TSS	1.2	0.63

pH for all subcategories between 6.0 - 9.0.

Table 2-3

Effluent Limitations for the Best Available Technology Economically Achievable (BATEA) Organic Chemicals Manufacturing Industry - Phase II, Significant Organic Products Segment

Effluent Characteristic	Effluent Limitations kg/kkg production or lb/1000 lb production	
	Maximum for any one day	Average of daily values for thirty consecutive days shall not exceed
Subcategory A - Nonaqueous Processes		
BTX Aromatics (Fractional distillation)		
COD	0.016	0.0089
BOD_5	0.0018	0.00099
TSS	0.0026	0.0015
Cumene		
No discharge of process waste water pollutants		
p-Xylene		
COD	0.0086	0.0047
BOD_5	0.0018	0.00093
TSS	0.0026	0.0014
Subcategory B - Processes with Process Water Contact only as Steam Diluent, Quench or Vent Gas Absorbent		
Chloromethanes		
COD	0.55	0.29
BOD_5	0.11	0.059
TSS	0.17	0.086
Diphenylamine		
COD	0.10	0.055
BOD_5	0.021	0.011
TSS	0.031	0.017

Table 2-3 (continued)

Phthalic Anhydride (oxidation of o-xylene)		
COD	0.22	0.11
BOD_5	0.023	0.012
TSS	0.035	0.018
Hexamethylenediamine (adiponitrile process)		
COD	6.6	3.5
BOD_5	0.039	0.021
TSS	0.058	0.032
Cyanide	0.00050	0.00025
Hexamethylenediamine (hexanediol process)		
COD	3.7	2.0
BOD_5	0.043	0.023
TSS	0.062	0.033
Cyanide	0.00055	0.00022
Methyl ethyl ketone		
COD	0.67	0.36
BOD_5	0.051	0.027
TSS	0.078	0.042
Adiponitrile		
COD	42	22
BOD_5	0.39	0.21
TSS	0.55	0.30
Cyanide	0.0049	0.0024
Benzoic Acid & Benzaldehyde		
COD	16	8.5
BOD_5	0.11	0.059
TSS	0.17	0.086
Maleic Anhydride		
COD	90	48
BOD_5	0.47	0.25
TSS	0.13	0.074
Subcategory C - Aqueous Liquid Phase Reaction Systems		
Ethyl Acetate		
COD	0.25	0.14
BOD_5	0.051	0.027
TSS	0.078	0.042
Isopropanol		
COD	0.94	0.50
BOD_5	0.098	0.052
TSS	0.14	0.080

Table 2-3 (continued)

Calcium Stearate		
COD	11	5.7
BOD_5	2.1	1.1
TSS	3.1	1.7
Hydrazine		
COD	36	19
BOD_5	1.2	0.63
TSS	1.8	0.94
Isobutylene		
COD	20	11
BOD_5	0.78	0.42
TSS	1.2	0.63
Sec Butyl Alcohol		
COD	12	6.5
BOD_5	0.062	0.034
TSS	0.038	0.020
Acrylonitrile		
COD	42	22
BOD_5	0.18	0.095
TSS	0.26	0.14
Cyanide	0.0022	0.0011
p-Aminophenol		
COD	23	13
BOD_5	0.51	0.27
TSS	0.74	0.40
Subcategory D - Batch and Semi-Continuous Processes		
o-Nitroaniline		
COD	50	27
BOD_5	11	5.7
TSS	16	8.5
p-Nitroaniline		
COD	25	13
BOD_5	1.6	0.82
TSS	2.3	1.2
Ionone and Methylionone		
COD	30	16
BOD_5	0.36	0.20
TSS	0.55	0.30

Table 2-3 (continued)

Methyl Salicylate		
COD	30	16
BOD_5	0.094	0.050
TSS	0.10	0.054
Citronellol and Geraniol		
COD	34	16
BOD	0.39	0.21
TSS	0.59	0.32
Plasticizers		
COD	27	14
BOD_5	0.21	0.11
TSS	0.038	0.021
Total Copper		
Tannic Acid		
COD	335	180
BOD_5	0.66	0.36
TSS	0.60	0.32

pH for all subcategories between 6.0 to 9.0.

Table 2-4

Standards of Performance for New Organic Chemicals Manufacturing - Phase II, Significant Organic Products Segment

Effluent Characteristic	Effluent Limitations kg/kkg production or lb/1000 lb production	
	Maximum for any one day	Average of daily values for thirty consecutive days shall not exceed
Subcategory A - Nonaqueous Processes		
BTX Aromatics (Fractional distillation)		
BOD5	0.0032	0.0018
TSS	0.0028	0.0015
Cumene		
No discharge of process waste water pollutants		
p-Xylene		
BOD5	0.0029	0.0016
TSS	0.0026	0.0015
Subcategory B - Processes with Process Water Contact only as Steam Diluent, Quench or Vent Gas Absorbent		
Chloromethanes		
BOD5	0.18	0.098
TSS	0.16	0.089
Diphenylamine		
BOD5	0.033	0.018
TSS	0.031	0.017
Phthalic Anhydride (oxidation of o-xylene)		
BOD5	0.039	0.021
TSS	0.035	0.019

Table 2-4 (continued)

Hexamethylenediamine (adiponitrile process)		
BOD_5	0.13	0.069
TSS	0.059	0.032
Cyanide	0.0010	0.00050
Hexamethylenediamine (hexanediol process)		
BOD_5	0.13	0.069
TSS	0.065	0.034
Cyanide	0.0011	0.00055
Methyl ethyl ketone		
BOD_5	0.12	0.068
TSS	0.078	0.042
Adiponitrile		
BOD_5	0.95	0.50
TSS	0.55	0.29
Cyanide	0.0098	0.0049
Benzoic Acid & Benzaldehyde		
BOD_5	0.87	0.46
TSS	0.16	0.089
Maleic Anhydride		
BOD_5	3.5	1.9
TSS	0.14	0.074
Subcategory C - Aqueous Liquid Phase Reaction Systems		
Ethyl Acetate		
BOD_5	0.087	0.046
TSS	0.078	0.042
Isopropanol		
BOD_5	0.22	0.12
TSS	0.15	0.08
Calcium Stearate		
BOD_5	3.5	1.9
TSS	3.1	1.7
Hydrazine		
BOD_5	2.1	1.1
TSS	1.8	0.94
Isobutylene		
BOD_5	2.0	1.1
TSS	1.2	0.63

Table 2-4 (continued)

Sec Butyl Alcohol		
BOD5	0.47	0.25
TSS	0.037	0.020
Acrylonitrile		
BOD5	1.2	0.67
TSS	0.26	0.14
Cyanide	0.0045	0.0022
p-Aminophenol		
BOD5	1.4	0.74
TSS	0.74	0.38
Subcategory D - Batch and Semi-Continuous Processes		
o-Nitroaniline		
BOD5	17	9.4
TSS	16	8.4
p-Nitroaniline		
BOD5	2.5	1.4
TSS	2.2	1.3
Ionone and Methylionone		
BOD5	0.87	0.48
TSS	0.55	0.29
Methyl Salicylate		
BOD5	0.71	0.39
TSS	0.10	0.055
Citronellol and Geraniol		
BOD5	1.9	1.0
TSS	0.59	0.32
Plasticizers		
BOD5	1.7	0.94
TSS	0.038	0.021
Total Copper	0.00065	0.00032
Tannic Acid		
BOD5	4.9	2.6
TSS	0.59	0.32

pH for all subcategories between 6.0 - 9.0.

SECTION III

INTRODUCTION

Purpose and Authority

Section 301(b) of the Act requires the achievement, by not later than July 1, 1977, of effluent limitations for point sources, other than publicly-owned treatment works, which are based on the application of the best practicable control technology currently available as defined by the Administrator pursuant to Section 304(b) of the Act. Section 301(b) also requires the achievement, by not later than July 1, 1983, of effluent limitations for point sources, other than publicly-owned treatment works, which are based on the application of the best available technology economically achievable which will result in reasonable futher progress toward the national goal of eliminating the discharge of all pollutants, as determined in accordance with regulations issued by the Administrator pursuant to Section 304(b) to the Act. Section 306 of the Act requires the achievement, by new sources, of a Federal standard of performance providing for the control of the discharge of pollutants which reflects the greatest degree of effluent reduction which the Administrator determines to be achievable through the application of the best available demonstrated control technology, processes, operating methods, or other alternatives, including, where practicable, a standard permitting no discharge of pollutants.

Section 304(b) of the Act requires the Administrator to publish, within one year of enactment of the Act, regulations providing guidelines for effluent limitations setting forth the degree of effluent reduction attainable through the application of the best practicable control technology currently available and the degree of effluent reduction attainable including treatment techniques, process and procedure innovations, operation methods, and other alternatives. The regulations proposed herein set forth effluent limitation guidelines pursuant to Section 304(b) of the Act for the organic chemicals industry.

Section 306 of the Act requires the Administrator, within one year after a category of sources is included in a list published pursuant to Section 306(b) (1)(A) of the Act, to propose regulations establishing Federal standards of performances for new sources within such categories. Section 307(c) of the Act also requires the Administrator to

propose pretreatment standards for new sources discharge to publicly owned waste treatment plants. The Administrator published, in the Federal Register of January 16, 1973 (38 F.R. 1624), a list of 27 source categories. Publication of the list constituted announcement of the Administrator's intention of establishing, under Section 306, standards of performance applicable to new sources within the organic chemicals industry, which was included in the list published January 16, 1973. This document is published under authority of Section 304(c) of the Act which requires that information be made available in the form of a technical report on alternate treatment models to implement effluent limitation and standards of performance for new sources.

Implementation of the Act regarding fulfillment of these requirements as outlined above was accomplished in a two phase effort. On April 25, 1974, the Environmental Protection Agency published effluent limitations and standards for 40 product/process segments (40 CFR 414). These segments generally constitute the large volume products and were designated the "Major Organic Products Segment of the Organic Chemicals Point Source Category". A technical report for Phase I effluent limitations was also published in April 1974, (EPA 440/1-73/009) in which the rationale and technical basis for the regulations were presented. The data and information presented in this document provides technical description of the 55 product/process segments investigated in the Phase II study of the Organic Chemicals Manufacturing Industry. Additionally the rationale and basis for effluent limitations for the selected 29 product/processes are also presented.

Scope of the Study

The Organic Chemicals Industry was defined to include those commodities listed under SIC 2865 (Cyclic Crudes and Intermediates) and SIC 2869 (Industrial Organic Chemicals Not Elsewhere Classified).

Tables 3-1 and 3-2 show 260 materials listed under SIC 2865 and 2869. It was noted that many specific commodities (e.g. ethylene, adiponitrile, hydrazine, synthetic vanillin, sodium sulfoxalate formaldehyde, etc.) are in the same list with references to very large families of products (e.g. synthetic organic dyes, coal tar distillates, organic pigments, alcohols, flavors, enzymes, etc.).

These lists are developed by the United States Department of Commerce and are oriented toward the collection of economic

data related to gross production, sales, and unit costs. They are not related to the true nature of this industry in terms of actual plant operations, production, or considerations associated with water pollution control. It should also be noted that all the major producers of organic chemicals are not included in the 286 group. Major companies not in group 286 are covered in such diverse classifications as petroleum refining, meat and dairy products, and photographic and optical equipment.

The exact nature of the manufacturing operations at any specific facility is characteristic only of that facility. There are very few, if any, organic chemicals plants which manufacture one product by a single process. Instead, almost all plants are multi-product facilities where the final mix of products shipped from each plant is unique. In some cases, the actual number of commodities produced can be in the thousands (such as a batch chemicals complex), while other facilities manufacture only two or three high volume products.

Table 3-1
Chemicals Listed Under SIC Code 2865

Cyclic Intermediates, Dyes, Organic Pigments (Lakes and Toners), and Cyclic (Coal Tar) Crudes

Acid dyes, synthetic
Acids, coal tar: derived from coal tar distillation
Alkylated diphenylamines, mixed
Alkylated phenol, mixed
Aminoanthraquinone
Aminoazobenzene
Aminoazotoluene
Aminophenol
Aniline
Aniline oil
Anthracene
Anthraquinone dyes
Azine dyes
Azobenzene
Azo dyes
Azoic dyes
Benzaldehyde
Benzene, product of coal tar distillation
Benzoic acid
Benzol, product of coal tar distillation
Biological stains
Chemical indicators
Naphthalene, chips and flakes
Chlorobenzene
Chloronaphthalene
Chlorophenol
Chlorotoluene
Coal tar acids, derived from coal tar distillation
Coal tar crudes, derived from coal tar distillation
Coal tar distillates
Coal tar intermediates
Color lakes and toners
Color pigments, organic: except animal black and bone black
Colors, dry: lakes, toners, or full strength organic colors
Colors, extended (color lakes)

Cosmetic dyes, synthetic
Cresols, product of coal tar distillation
Creosote oil, product of coal tar distillation
Cresylic acid, product of coal tar distillation
Cyclic crudes, coal tar: product of coal tar distillation
Cyclic intermediates
Cyclohexane
Diphenylamine
Drug dyes, synthetic
Dyes, synthetic organic
Eosine toners
Ethylbenzene
Food dyes and colors, synthetic
Hydroquinone
Isocyanates
Lake red C toners
Lithol rubine lakes and toners
Maleic anhydride
Methyl violet toners
Naphtha, solvent: product of coal tar distillation
Naphthalene, product of coal tar distillation
Naphthol, alpha and beta
Naphtholsulfonic acids
Nitroaniline
Nitrobenzene
Nitro dyes
Nitrophenol
Nitroso dyes
Oils: light, medium, and heavy--product of coal tar distillation
Orthodichlorobenzene
Paint pigments, organic
Peacock blue lake
Pentachlorophenol
Persian orange lake
Phenol
Phloxine toners
Phosphomolybdic acid lakes and toners

Table 3-1
(continued)

Phosphotungstic acid lakes and toners
Phthalic anhydride
Phthalocyanine toners
Pigment scarlet lake
Pigments, organic: except animal black and bone black
Pitch, product of coal tar distillation
Pulp colors, organic
Quinoline dyes
Resorcinol
Scarlet 2 R lake
Stilbene dyes
Styrene
Styrene monomer
Tar, product of coal tar distillation
Toluene, product of coal tar distillation
Toluol, product of coal tar distillation
Toluidines
Toners (reduced or full strength organic colors)
Vat dyes, synthetic
Xylene, product of coal tar distillation
Xylol, product of coal tar distillation

Table 3-2
Chemicals Listed Under SIC Code 2869
Industrial Organic Chemicals, Not Elsewhere Classified

Accelerators, rubber processing: cyclic and acyclic
Acetaldehyde
Acetates, except natural acetate of clime
Acetic acid, synthetic
Acetic anhydride
Acetin
Acetone, synthetic
Acids, organic
Acrolein
Acrylonitrile
Adipic acid
Adiponitrile
Alcohol, aromatic
Alcohol, fatty: powdered
Alcohols, industrial: denatured (nonbeverage)
Algin products
Amines of polyhydric alcohols, and of fatty and other acids
Amyl acetate and alcohol
Antioxidants, rubber processing: cyclic and acyclic
Bromochloromethane
Butadiene, from alcohol
Butyl acetate, alcohol, and propionate
Butyl ester solution of 2, 4-D
Calcium oxalate
Camphor, synthetic
Carbon bisulfide (disulfide)
Carbon tetrachloride
Casing fluids, for curing fruits, spices, tobacco, etc.
Cellulose acetate, unplasticized
Chemical warfare gases
Chloral
Chlorinated solvents
Chloroacetic acid and metallic salts
Chloroform
Chloropicrin
Citral

Table 3-2
(continued)

Citrates
Citric acid
Citronellol
Coumarin
Cream of tartar
Cyclopropane
DDT, technical
Decahydronaphthalene
Dichlorodiflouromethane
Diethylcyclohexane (mixed isomers)
Diethylene glycol ether
Dimethyl divinyl acetylene (di-isopropenyl acetylene)
Dimethylhydrazine, unsymmetrical
Enzymes
Esters of phthalic anhydride: and of phosphoric, adipic, lauric, oleic, sebacic, and stearic acids
Esters of polyhydric alcohols
Ethanol, industrial
Ether
Ethyl acetate, synthetic
Ethyl alcohol, industrial (non-beverage)
Ethyl butyrate
Ethyl cellulose, unplasticized
Ethyl chloride
Ethyl ether
Ethyl formate
Ethyl nitrite
Ethyl perhydrophenanthrene
Ethylene
Ethylene glycol
Ethylene glycol ether
Ethylene glycol, inhibited
Ethylene oxide
Ferric ammonium oxalate
Flavors and flavoring materials, synthetic
Fluorinated hydrocarbon gases
Formaldehyde (formalin)
Formic acid and metallic salts
Freon

Table 3-2
(continued)

Fuel propellants, solid organic
Fuels, high energy, organic
Gases, fluorinated hydrocarbon
Geraniol, synthetic
Glycerin, except from fats (synthetic)
Grain alcohol, industrial
Hexamethylenediamine
Hexamethylenetetramine
High purity grade chemicals, organic: refined from technical grades
Hydraulic fluids, synthetic base
Hydrazine
Industrial organic cyclic compounds
Ionone
Isopropyl alcohol
Ketone, methyl ethyl
Ketone, methyl isobutyl
Laboratory chemicals, organic
Lauric acid esters
Lime citrate
Malononitrile, technical grade
Metallic salts of acyclic organic chemicals
Metallic stearate
Methanol, synthetic (methyl alcohol)
Methyl chloride
Methyl perhydrofluorine
Methyl salicylate
Methylamine
Methylene chloride
Monochlorodifluoromethane
Monomethylparaminophenol sulfate
Monosodium glutamate
Mustard gas
Nitrous ether
Normal hexyl decalin
Nuclear fuels, organic
Oleic acid esters
Organic acids, except cyclic
Organic chemicals, acyclic
Oxalates
Oxalic acid and metallic salts
Pentaerythritol

Table 3-2
(continued)

Perchloroethylene
Perfume materials, synthetic
Phosgene
Phthalates
Plasticizers, organic: cyclic and acyclic
Polyhydric alcohols
Potassium bitartrate
Propellants for missiles, solid, organic
Propylene
Propylene glycol
Quinuclidinol ester of benzylic acid
Reagent grade chemicals, organic: refined from technical grades
Rocket engine fuel, organic
Rubber processing chemicals, organic: accelerators and antioxidants--cyclic and acyclic
Saccharin
Sebacic acid
Silicones
Soaps, naphthenic acid
Sodium acetate
Sodium alginate
Sodium benzoate
Sodium glutamate
Sodium pentachlorophenate
Sodium sulfoxalate formaldehyde
Solvents, organic
Sorbitol
Stearic acid esters
Stearic acid salts
Sulfonated naphthalene
Tackifiers, organic
Tannic acid
Tanning agents, synthetic organic
Tartaric acid and metallic salts
Tartrates
Tear gas
Terpineol
Tert-butylated bis (p-phenoxyphenyl) ether fluid

Table 3-2
(continued)

Tetrachloroethylene
Tetraethyl lead
Thioglycolic acid, for permanent wave lotions
Trichloroethylene
Trichloroethylene stabilized, degreasing
Trichlorophenoxyacetic acid
Trichlorotrifluoroethane tetrachlorodirluoroethane isopropyl alcohol
Tricresyl phosphate
Tridecyl alcohol
Trimethyltrithiophosphite (rocket propellants)
Triphenyl phosphate
Urea
Vanillin, Synthetic
Vinyl acetate

Methods Used for Development of the Effluent Limitations and Standards of Performance

The effluent limitations guidelines and standards of performance proposed herein were developed in the following manner. The point-source category was first subcategorized for the purpose of determining whether separate limitations and standards are appropriate for different segments within a point-source category. Such subcategorization was based upon raw material used, product produced, manufacturing process employed, and other factors. The raw waste characteristics for each subcategory were then identified. This included an analysis of: 1) the source and volume of water used in the process employed and the sources of waste and waste waters in the plant; and 2) the constituents (including thermal) of all waste waters (including toxic constituents and other constituents) which result in taste, odor, and color in the receiving waterbody. The constituents of waste waters which should be subject to effluent limitations guidelines and standards of performance were identified.

The full range of control and treatment technologies existing within each subcategory was identified. This included an identification of each distinct control and treatment technology, including both in-plant and end-of-pipe technologies, which are existent or capable of being designed for each subcategory. It also included an identification of the effluent level resulting from the application of the treatment and control technologies, in terms of the amount of constituents (including thermal) and of the chemical, physical, and biological characteristics of pollutants. The problems, limitations, and reliability of each treatment and control technology and the required implementation time were also identified. In addition, the nonwater quality environmental impact (such as the effects of the application of such technologies upon other pollution problems, including air, solid waste, noise, and radiation) was also identified. The energy requirements of each of the control and treatment technologies were identified, as well as the cost of the application of such technologies.

The information, as outlined above, was then evaluated in order to determine what levels of technology constituted the "best practicable control technology currently available", "best available technology economically achievable", and the "best available demonstrated control technology, processes, operating methods, or other alternatives." In identifying such technologies, various factors were considered. These included the total cost of application of technology in

relation to the effluent reduction benefits to be achieved from such application, the age of equipment and facilities involved, the process employed, the engineering aspects of the application of various types of control techniques, process changes, nonwater quality environmental impact (including energy requirements), and other factors.

During the initial phases of the study, an assessment was made of the availability, adequacy, and usefulness of all existing data sources. Data on the identity and performance of waste water treatment systems were known to be included in:

1. Letter surveys conducted by the Manufacturing Chemists' Association (MCA).

2. NPDES Permit Applications.

3. Self-reporting discharge data from various states.

Limited data on process raw waste loads were also known to be included in previous MCA survey returns.

A preliminary analysis of these data indicated an obvious need for additional information.

NPDES permit applications data are limited to identification of the treatment system used and reporting of final concentrations (which were diluted with cooling waters in many cases); consequently, operating performance could not be determined.

Texas, where there is a high concentration of organic chemical plants, has a self-reporting discharge system. These reports again show only final effluent concentrations and identify the system used; only rarely is there production information available which would permit the essential determination of unit waste loads.

Additional data in the following areas were therefore required: 1) process RWL (Raw Waste Load) related to production; 2) currently practiced or potential in-process waste control techniques; and 3) the identity and effectiveness of end-of-pipe treatment systems. The best source of information was the chemical manufacturers themselves. This additional data was obtained from direct interviews and from inspection and sampling of organic chemical manufacturing and waste water treatment facilities.

Collection of the data necessary for development of RWL and effluent treatment requirements within dependable confidence limits required analysis of both production and treatment operations. In number of cases, the plant visits were planned so that the production operations of a single plant could be studied in association with an end-of-process treatment system which receives only the wastes from that production. The RWL for such a plant and associated treatment technology would fall within a single category. However, the unique feedstock and product position applicable to individual manufacturers made this idealized situation rare.

In the majority of cases, it was necessary to visit individual facilities where the products manufactured fell into several subcategories. The end-of-process treatment facilities received combined waste waters associated with several subcategories (several products). It was necessary to analyze separately the production (waste generating) facilities and the effluent (waste treatment) facilities. This required establishment of a common basis, the Raw Waste Load (RWL), for common levels of treatment technology for the products within a subcategory and for the translation of treatment technology between categories.

The selection of process plants as candidates to be visited was guided by the trial subcategorization, which was based on anticipated differences in RWL. Process plants which manufacture only products within one subcategory, as well as those which cover several subcategories, were scheduled for inspection and sampling to insure the development of a dependable data base.

The selection of treatment plants as candidates for visitation and sampling was developed from information available in the MCA survey returns, Corps of Engineers Permit Applications, state self-reporting discharge data, and contacts within the industry. Every effort was made to choose facilities where meaningful information on both treatment facilities and manufacturing processes could be obtained.

The selection of plants visited was based upon several factors. First, since most plants in this industry do not have biological treatment facilities, every effort was made to visit those plants which do have such facilities. Other plants were selected on the basis of accessibility and engineering judgement on the part of the contractor as to which plants were representative of the product/processes studied.

Survey teams composed of project engineers and scientists conducted actual plant visits. Information on the identity and performance of waste water treatment systems were obtained through:

1. Interviews with plant water pollution control personnel.

2. Examination of treatment plant design and historical operating data (flow rates and analyses of influent and effluent).

3. Treatment plant influent and effluent sampling.

The data base obtained in this manner was then utilized by the methodology previously described to develop recommended effluent limitations and standards of performance for the organic chemical industry. References utilized are included in Section XV of this report. The data obtained during the field data collection program are included in Supplement B. Due to the large volume of information in Supplement B, it was not practical to be included in this report.

A copy of Supplement B is on file at the Environmental Protection Agency's Freedom of Information Office, 401 M Street, S.W. Washington, D.C. and can be inspected at that location.

Water Usage Associated with Different Segments of a Chemical Plant

The production quantities associated with the product mix shipped from a plant are not necessarily a true indication of the extent or type of manufacturing activities carried out within that plant. In many cases, several products are produced captively within the plant and subsequently utilized as feedstocks in the production of those products ultimately shipped from the plant.

These factors are worthy of consideration in that the water usage and subsequent water pollution caused by the Organic Chemicals industry are directly related to the specific nature of its diverse manufacturing processes. Analysis of these manufacturing processes is, therefore, the logical starting point for any study whose objective is the development of production-based effluent limitations guidelines.

In order to develop such production-based effluent limitations guidelines, it was necessary to utilize some

"common denominator" which would relate diverse production activities (waste generating activities) with water pollution control technologies (waste treatment activities). Process raw waste load (RWL) was considered as the best tool for accomplishing this objective. Other waste water sources of a nonprocess origin such as rain water runoff and from utilities, laboratories, storage and transfer facilities may also contain significant raw waste loads and require treatment together with process waste waters. The quantities of nonprocess waste water loads is not normally related to the quantities of production. These nonprocess waste waters were therefore not considered in addition to or as part of the process raw waste loads except in certain cases such as in batch process as noted in Section IV. Nonprocess waste waters which are significant and require treatment may be provided effluent allocations for such sources under Section 402 (NPDES) for permit issuance.

For purposes of this study, the process RWL is defined as the quantity of waste and pollutants generated by a manufacturing process, divided by the quantity of chemical product derived from the process. In this context, the process represents a unique set of chemical conversions and unit operations by which a specific feedstock is transformed into a specific set of products, co-products, and by-products. The quantities of water and pollutants are measured prior to treatment for removal of pollutants. These quantities include all water which contacts chemicals within the process battery limits and excludes non-contact water associated with heating and cooling surface heat exchangers. This differentiation was drawn on the basis that oxygen-demanding parameters (for which effluent limitations guidelines are subsequently developed) are associated primarily with such contact wastes. It is appreciated that surface run-off, tank drainage, and other sources outside the battery limits may also contribute to this type of pollution, but very little data are available to indicate the significance of these sources compared to actual process wastes.

A detailed discussion of the process RWL, contact and noncontact water usage, and the interactions of feedstocks, products, and associated chemical conversions and unit operations within the manufacturing plant complex is also given in the Development Document for Phase I of this study (EPA440/1-73/009). Phase II of the organic chemicals industry study includes 29 additional product/process segments for which effluent limitations and guidelines are presently established and 26 other product/processes for which effluent limitation and guidelines are not presently

established. It is expected that limitations and guidelines for these will be established at a later date.

Waste Water Control Technology

The development of waste water reduction factors is another item requiring preliminary comment. It was originally anticipated that these factors (relating to demonstrated treatment technologies defining BPCTCA, BATEA, and BADCT) could be obtained from performance data on many operating treatment plants in the organic chemicals industry. It was known that this industry did not have numerous waste water treatment facilities; however, the original assumptions proved to be overly optimistic. Relatively few organic chemical manufacturers were able to provide substantial data on the treatment of their waste water.

Information from an industry survey conducted in 1972 by members of the Manufacturing Chemists Association which consisted of 100 organic chemicals plants had indicated that approximately 10 percent of the plants surveyed had biological treatment systems installed. This was confirmed from plant visits by the contractor and review of NPDES permit applications. For these sources of data and information, the following approximately describes the industry's waste treatment practices: 80 percent of the industry's 674 production facilities (Dept. of Commerce 1972 Census of Manufacturers) were found to provide no on-site treatment other than neutralization of their waste water. Many of these (approximately 50 percent) presently discharge to municipal treatment systems. Of the remainder, approximately 10 percent provide miscellaneous physical treatment such as sedimentation, while approximately 10 percent provide biological treatment of some type. According to the 1967 Department of Commerce Census of Manufacturing - Water Use (latest data available) there are 174 plants treating wastewaters. This is 26 percent of the 674 plants. Of these, 77 plants have pH control and an estimated 40 plants have pH control only. Thus, 134 plants, 20 percent of the total, have treatment other than pH control.

Biological treatment typified by the activated sludge process was defined as BPCTCA. The addition of activated carbon with suspended solids removal by filtration was defined as BATEA. The addition of a filtration step to the BPCTCA activated sludge process was defined as BADCT.

Reduction factors based upon the performance of existing biological systems, in this and other similar industries as

established. It is expected that limitations and guidelines for these will be established at a later date.

Waste Water Control Technology

The development of waste water reduction factors is another item requiring preliminary comment. It was originally anticipated that these factors (relating to demonstrated treatment technologies defining BPCTCA, BATEA, and BADCT) could be obtained from performance data on many operating treatment plants in the organic chemicals industry. It was known that this industry did not have numerous waste water treatment facilities; however, the original assumptions proved to be overly optimistic. Relatively few organic chemical manufacturers were able to provide substantial data on the treatment of their waste water.

Information from an industry survey conducted in 1972 by members of the Manufacturing Chemists Association which consisted of 100 organic chemicals plants had indicated that approximately 10 percent of the plants surveyed had biological treatment systems installed. This was confirmed from plant visits by the contractor and review of NPDES permit applications. For these sources of data and information, the following approximately describes the industry's waste treatment practices: 80 percent of the industry's 674 production facilities (Dept. of Commerce 1972 Census of Manufacturers) were found to provide no on-site treatment other than neutralization of their waste water. Many of these (approximately 50 percent) presently discharge to municipal treatment systems. Of the remainder, approximately 10 percent provide miscellaneous physical treatment such as sedimentation, while approximately 10 percent provide biological treatment of some type. According to the 1967 Department of Commerce Census of Manufacturing - Water Use data available) the are 174 plants treating wastewaters. This is 26 percent of the 674 plants. Of these 77 plants have pH control and an estimated 40 plants have pH control only. Thus, 134 plants, 20 percent of the total, have treatment other than pH control.

Biological treatment typified by the activated sludge process was defined as BPCTCA. The addition of activated carbon with suspended solids removal by filtration was defined as BATEA. The addition of a filtration step to the BPCTCA activated sludge process was defined as BADCT.

Reduction factors based upon the performance of existing biological systems, in this and other similar industries as

well as in-process control, and information available in the literature were the bases used to develop each technology level effluent limitation. These factors were applied to each of the raw waste loads determined for each of the product/process segments.

SECTION IV

INDUSTRY CATEGORIZATION

Discussion of the Rationale of Categorization

A major goal of this effort was to broaden the RWL data base and to further substantiate the Phase I subcategorization. The following is a synopsis of the subcategorization rationale which was thoroughly discussed in the Phase I study.

The diverse range of products and manufacturing processes to be covered suggested that separate effluent limitations be designated for different segments within the industry. To this end, a subcategorization of the organic chemicals industry was developed.

Manufacturing processes have been examined for the type of contact process water usage associated with each. Contact process water is defined to be all water which comes in contact with chemicals within the process and includes:

1. Water required or produced (in stoichiometric quantities) in the chemical reaction.

2. Water used as a solvent or as an aqueous medium for the reactions.

3. Water which enters the process with any of the reactants or which is used as a diluent (including steam).

4. Water associated with mechanical devices such as steam-jet ejectors for drawing a vacuum on the process.

5. Water used as a quench or direct-contact coolant such as in a barometric condenser.

Noncontact flows not included in the RWL data include the following:

1. Sanitary waste water.

2. Boiler and cooling tower blowdown or once-through cooling water.

3. Chemical regenerants from boiler feed water preparation.

4. Storm water runoff from nonprocess plant areas, e.g., tank farms.

The type and quantity of contact process water usage are related to the specific unit operations and chemical conversions within a process. The term "unit operations" is defined to mean specific physical separations such as distillation, solvent extraction, crystallization, adsorption, etc. The term "chemical conversion" is defined to mean specific reactions such as oxidation, halogenation, neutralization, etc.

Description of Subcategories

Four process subcategories have been established and are discussed in the following text. Subcategories A, B, and C relate to continuous processes, while Subcategory D relates to batch and semi-continuous processes. In the Phase I study, subcategories A, B, and C were developed to represent product/process segments that are continuously operated. The following subcategories with accompanying descriptions also apply to Phase II product/process segments.

Subcategory A: Continuous Nonaqueous Processes

This group involves minimal contact between water and reactants or products within the process. Water is not required as a reactant or diluent, and is not formed as a reaction product. The only water usage stems from periodic washes of working fluids or catalyst hydration. Heating and cooling are done indirectly or through nonaqueous (hydrocarbon) working fluids. Process raw waste loads should approach zero, with variations caused only by spills or process upsets, which can be minimized by good housekeeping, equipment maintenance and process controls.

Subcategory B: Continuous Vapor-Phase Processes Where Contact, Water is Used Only as Diluent, Quench or Vent Gas Absorbent

In this subcategory, process water usage is in the form of dilution steam, a direct contact quench, or as an absorbent for reactor effluent gases. Reactions are all vapor-phase and are carried out over solid catalysts. Most processes have an absorber coupled with steam stripping of chemicals for purification and recycle. Steam is also used for catalyst decoking. It is feasible to reduce some process

raw waste loads almost to zero through increased recycle and/or reuse of contact water in this subcategory.

Subcategory C: Continuous Liquid-Phase Reaction Systems

Liquid-phase reaction systems involve a catalyst in an aqueous medium such as dissolved or emulsified mineral salt, or acid/caustic solution. Continuous regeneration of the catalyst system requires extensive water usage. Substantial removal of spent catalyst and inorganic salt by-products may also be required. The working aqueous catalyst solution is normally corrosive. Additional water may be required for final purification or neutralization of products. Requirements for purging waste materials from the system prevent process raw waste load from approaching zero.

Subcategory D: Batch and Semi-Continous Processes

This subcategory is characterized by processes which are carried out in reaction kettles equipped with agitators, scrapers, reflux condensers, etc., depending on the nature of the operation. Many reactions are liquid-phase with aqueous catalyst systems. Reactants and products are transferred from one piece of equipment to another by gravity flow, pumping, or pressurization with air or inert gas. Much of the material handling is manual, with limited use of automatic process control. Filter presses and centrifuges are commonly used to separate solid products from liquid. Where drying is required, air or vacuum ovens are used. Cleaning of noncontinuous production equipment constitutes a major source of waste water.

Basis for Assignment to Subcategories

The subcategorization system assigns specific products to specific subcategories according to the water usage in manufacturing as previously defined. Where more than one process is commercially used to produce a specific chemical, it is possible that the chemical may be listed in more than one subcategory since the unit operations and chemical conversions associated with different feedstocks may differ drastically in regard to process water usage and associated RWL.

It is noted that the field sampling in Subcategory D for fatty acids, dyes, pigments and plasticizers was based on end-of-pipe sampling. Therefore, the associated RWL flow data contains minimal amounts of noncontact waters. This is in contrast to other products where noncontact waters were able to be excluded.

Product: BTX Aromatics

Process: Fractional Distillation

Process RWL Subcategory: A

Chemical Reactions: None

The product obtained here is a mixture consisting of benzene, toluene, and xylenes which are separated from paraffinic, olefinics, and mixed high boiling aromatic organics (over 150°C). Some ethyl benzene is also recovered. The process involves a series of fractionating columns. There is no direct contact water; consequently raw waste loads are very low.

PROCESS FLOW	
liters/kkg	46.7
gals/M lbs	5.6
BOD_5 RWL	
mg/liter[1]	320
kg/kkg[2]	0.015
COD RWL	
mg/liter[1]	1150
kg/kkg[2]	0.053
TOC RWL	
mg/liter[1]	328
kg/kkg[2]	0.015

[1] Raw waste concentrations are based on unit weight of pollutant per unit volume of process waste waters.
[2] Raw waste loadings are based on unit weight of pollutant per 1000 unit weights of product.

Product: Cumene

Process: Alkylation of Benzene with Propylene

Process RWL Subcategory: A

Chemical Reactions:

$$C_6H_6 + CH_3CH = CH_2 \xrightarrow[90\%]{H_3PO_4} C_6H_5CH\ (CH_3)_2$$

Benzene + Propylene — Cumene (Isopropyl Benzene)

Typical Material Requirements:

1000 Kg Cumene

	1000 Kg Cumene
Benzene	720 kg
Propylene	389 kg
Phosphoric Acid (SPA)	666 kg

Cumene is an intermediate in the production of phenol. (Acetone and Acetophenone are co-products.) Cumene is also an excellent blending ingredient of high-octane gasoline.

Although cumene is a naturally occurring chemical, present in many crude oils, the commercial product is synthesized by the catalytic alkylation of benzene by propylene. The principal side reactions, depending on the catalyst system employed, include polyalkylation to form di- and tri-isopropyl-benzene, polymerization of a portion of the propylene, and the production of n-propylbenzene by isomerization.

Catalyst systems that have been used to produce cumene include such materials as sulfuric acid, hydrofluoric acid, boron trifluoride, silica, zinc chloride on alumina, and others. However, the two catalyst systems most commonly used for commercial production are aluminum chloride and solid phosphoric acid (SPA). The catalyst system used at the process plant visited during the field data collection program employed the SPA catalyst.

A typical flow diagram for the solid phosphoric acid process of producing cumene is illustrated in Figure 4-1. As shown, this process requires a reactor and three distillation columns - one for rejection of propane, one for the recycle of unreacted benzene, and the third to rerun the cumene product so as to reject a minor quantity of polyalkylated materials (mainly diisopropylbenzene). Yields obtained by this process are over 90% of stoichiometric values on both benzene and olefin.

The aluminum chloride process is similar to that illustrated for solid phosphoric acid but requires additional equipment for the drying of recycle streams and neutralization of the reaction products.

A mixture of propylene and propane is blended with both fresh and recycled benzene in a raw materials feed tank. Water (as steam condensate) at 100-150 ppm is injected into the reaction mixture. The reaction mixture is feed to the top of a fixed-bed reactor, where the liquid trickles down through the catalyst bed. Steam (noncontact) is used to preheat the reaction mixture. The process is carried out in a continuous manner.

The reaction product (effluent from the reactor) is then filtered. The water phase (1.0 liter/day) is removed to a water drain. A depropanizer still receives the organic phase. Propane is separated out and can be recycled to the reactor. Waste water from the propane accumulator amounts to about 0.3 kg/1000 kg of product.

Unreacted benzene is removed in a benzene distillation column. The benzene is recycled with fresh benzene to the raw materials mix or feed tank. Bottoms from the "benzene column" contain cumene and higher alkylaromatics.

Cumene is removed as a product in the finishing still. Diisopropylbenzene is the major by-product removed as still bottoms.

The only continuous waste water streams are from the benzene storage area, the waste water following the propane accumulator (0.3 liter/1,000 kg of cumene produced), and the water phase from the filter following the reactor. This latter stream is an intermittent flow (< 1.0 liter/day).

In newer processing plants, a combination air/water cooling system can greatly reduce the noncontact water requirement. This is illustrated as follows:

Cooling Water Circulation Requirement

With air cooling	24,200 liters/kkg product
Without air cooling	82,600 liters/kkg product

Steam required to heat the distillation towers is 7,590 kg per 1000 kg of product.

Process RWL based on waste water flows are indicated in the tabulation below:

PROCESS FLOW	
liters/kkg	0.334
gal/M lbs	0.04
BOD_5 RWL	
mg/liter[1]	180
kg/kkg[2]	0.0001
COD RWL	
mg/liter[1]	490
kg/kkg[2]	0.0003
TOC RWL	
mg/liter[1]	180
kg/kkg[2]	0.0001

[1] Raw waste concentrations are based on unit weight of pollutants per unit volume of process waste waters.
[2] Raw waste loadings are based on unit weight of pollutants per 1000 unit weights of product.

The raw waste load from cumene is minimal when expressed on a production basis. It is recommended that the process raw waste load for the cumene process be considered as no dishcarge since the quantity of the actual load is insignificant.

FIGURE 4-1

CUMENE—ALKYLATION OF BENZENE BY PROPYLENE

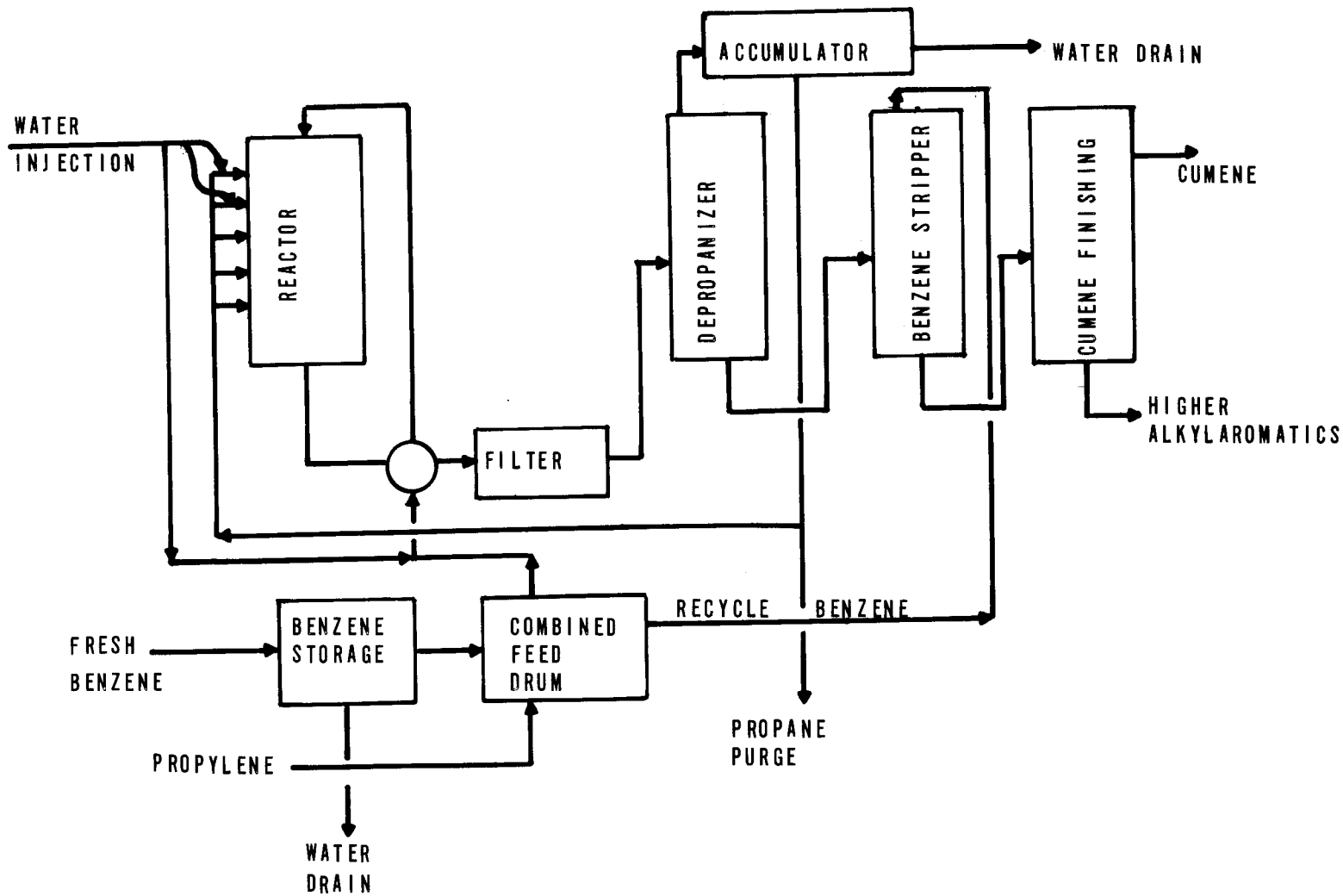

Product: p-Xylene

Process: Isomerization, Crystallization, and Filtration of mixed Xylenes.

Process RWL Subcategory: A

Because of the rapidly increasing demand for aromatic di-functional acids, interest in pure xylene isomers has been growing. The C8 aromatics found in catalytic reformate consist roughly of 45 percent m-xylene, 20 percent each o- and p-xylene, and 15 percent ethylbenzene. There is much less demand for m-xylene than for either of the other two xylene isomers. An isomerization unit, which is used to shift methyl groups, converting m- and o-xylene to additional p-xylene, is frequently built onto existing xylene-isomer separation facilities.

All p-xylene processes currently in operation use a combination of crystallization and centrifugation to separate and purify p-xylene. The crystallization step is usually in concert with o-xylene and/or ethylbenzene removal and isomerization.

Figure 4-2 illustrates a typical two-stage crystallization process with an isomerization unit.

Crystallization processes generally have the following steps in common, although the techniques may vary:

Feedstock drying
First-stage crystallization (to about -27°C to 32°C)
Second-stage crystallization (to about -18°C to -4°C)
Recovery and melting of crystals from first stage
Recovery and melting of crystals from second stage.

It is necessary to lower the water content in the feedstock to about 10 ppm because water introduced into the process will freeze and cause plugging of the centrifuges and rotary filters. All processes utilize similar drying techniques, which usually consist of passing the feed through alumina or silica-gel beds. One bed is on-stream while the other bed is being regenerated either by electric heaters or with jacketed steam.

The major differences in the processes are the mechanics of the crystallization and separation facilities. Most processes use direct refrigeration. The feed is precooled to about -40°C using propane and ethylene, and the chilled feed is then sent to the first-stage crystallizer at an

FIGURE 4-2

PARA-XYLENE, ISOMERIZATION; CRYSTALLIZATION, AND FILTRATION OF MIXED-XYLENE

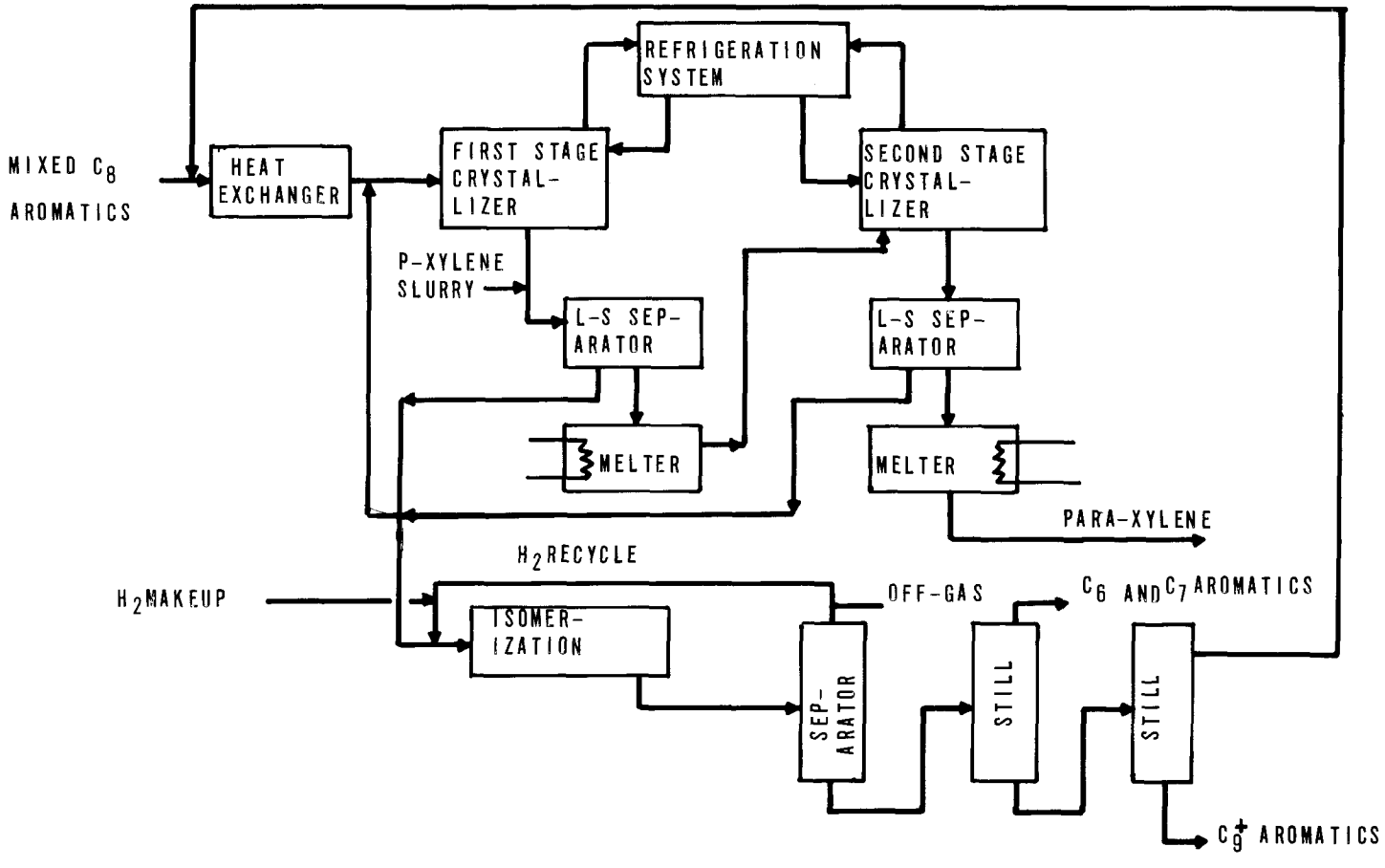

operating temperature of -62°C to 66°C. The first-stage crystallizers are usually scraped-surface tubular exchangers or tank crystallizers. In each of these devices, an agitator with spring-loaded blades is used to scrape the p-xylene crystals from the walls.

The crystals formed in the first stage are relatively small. Therefore, strict control of crystal size is necessary to insure that the centrifuges or filters used in their recovery will be of adequate size.

Considerable advances have been made in the last several years in development of more efficient solid-liquid separation devices. Most modern domestic plants utilize continuous solid-bowl centrifuges in the first stage. Two bowls rotating horizontally at different speeds cause a helical screw motion on the outer surface of the inner bowl. The helical motion moves the solids from the settling slurry pool through a draining section emitting a nearly dry cake. The centrifuges can be regulated to control bowl revolution speeds, bowl differential, and slurry pool depth. This can achieve p-xylene first-stage purity of 85%. The centrifuges can be fitted for backwash, but the benefits are doubtful. Crystals grown in the first stage tend to be long and thin monoclinic needles that drain with difficulty. As a result, a sizable portion of mother liquor tends to remain occluded in the interstices between the p-xylene crystals.

Crystals from the first stage are melted (or partially melted) and recrystallized at about -32°C. The second-stage crystallizers are similar to the first-stage units. The second-stage crystals tend to be cylindrical in shape, approximately 200 X 360 microns, and drain more easily. Furthermore, the viscosity of the mother liquor in the second stage is about 1 cp* compared to 5 cp in the first stage. This difference in viscosity enhances the drainage rate. Also, a pusher-plate mechanism is available in the second stage crystallizer to increase the drainage rate in the exit section. About 99.5% pure p-xylene is obtained from this type of two stage operation.

The filtrates from the first- and the second-stage liquid-solid separation are sent to the isomerization reactor after mixing with hydrogen gas. In the reactor, m-xylene is isomerized over a platinum catalyst into an equilibrium mixture of the three isomers, which is then recycled through

the p-xylene crystallization steps. The isomerization reaction is run to extinction, that is, only the para isomer of xylene is withdrawn from the manufacturing operation. The hydrogen gas is required to provide the hydrogen atmosphere necessary for conducting the xylene isomerization process and is generally produced on the site. Consequently, the isomerization and the hydrogen facilities are an integral part of the p-xylene process.

The major sources of waste water are the regeneration water used during decoking of catalyst beds and the steam drum washdown from the hydrogen plant. These streams are intermittent, and the amounts are insignificant. The monoethanolamine (MEA) contaminated waste water from the hydrogen plant may be difficult to treat biologically. Deep well disposal has been practiced in the past in some cases on these wastes.

The averages of four sets of composite samples for the plant which was surveyed are presented in the tabulation below:

PROCESS FLOW	
liters/kkg	44.3
gals/M lb	5.3
BOD_5 RWL	
mg/liter[1]	238
kg/kkg[1]	0.01
COD RWL	
mg/liter[1]	580
kg/kkg[2]	0.025
TOC RWL	
mg/liter[1]	159
kg/kkg	0.007

1. Raw waste concentrations are based on unit weight of pollutants per unit volume of process waste waters.
2. Raw waste loadings are based on unit weight of pollutants per 1000 unit weights of product.

The p-xylene process produces very small raw waste loads on the basis of unit production.

Product: Chlorobenzene

Process: Chlorination of Benzene

Process RWL Subcategory: B

Chemical Reaction:

$$\underset{\text{Benzene}}{C_6H_6} + Cl_2 \longrightarrow \underset{\text{Chlorobenzene}}{C_6H_5Cl} + HCl$$

Chlorobenzene, an important intermediate in the manufacture of dyes and insecticides, is manufactured by the chlorination of benzene. Two faciilities were visited during the field-data collection program, one which manufactured chlorobenzene exclusively, and one which also produced dichlorobenzene. Figures 4-3 and 4-4 are process flow diagrams of these two facilities, respectively.

At the first facility (chlorobenzene only), benzene and chlorine are fed to the reactor, and the hydrochloric acid produced by the reaction is absorbed in water to make aqueous hydrochloric acid. The chlorobenzene formed by the reaction is neutralized with sodium hydroxide and then purified by distillation. The brine formed during the neutralization step goes to the sewer, and a tar-like residue from the chlorobenzene distillation is incinerated.

The second facility (chlorobenzene-dichlorobenzene) uses a very smilar processing strategy, with a few additions. The hydrochloric acid coming from the absorption step is purified by carbon adsorption, and the tail gas which passes through the absorber is scrubbed with water prior to exhaust to the atmosphere. Another difference in the procssing strategy at this facility is in the purification of the chlorobenzene reaction products. The products proceed to a distillation column, where any unreacted benzene is taken overhead and recycled to the chlorinator. The products proceed from the bottom of this distillation column to a second distillation column, where chlorobenzene product is taken overhead while the bottoms from the distillation column proceed to dichlorobenzene refining.

In the survey period, waste water samples from each facility were collected for analysis. The following is the mean value of waste water analyses from the two plants:

FIGURE 4-3
CHLOROBENZENE — CHLORINATION OF BENZENE

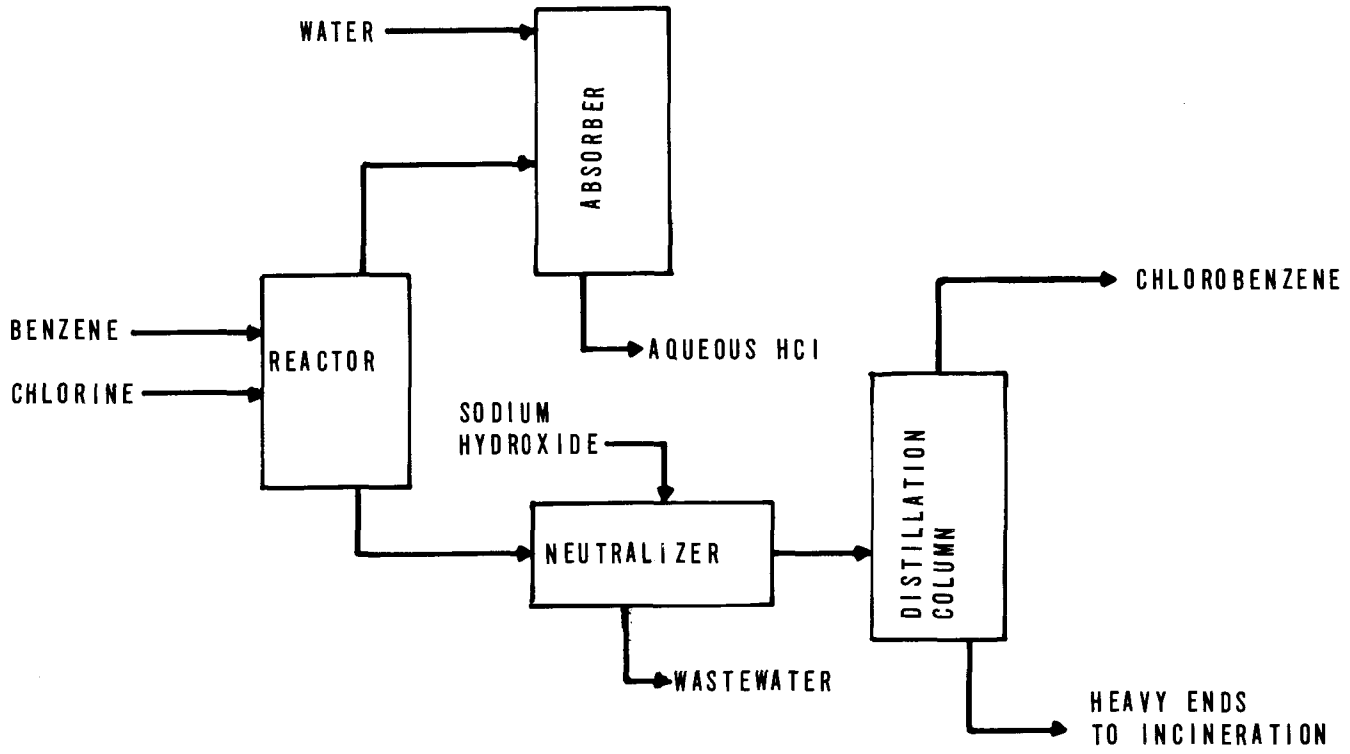

FIGURE 4-4
DICHLOROBENZENE — CHLORINATION OF BENZENE

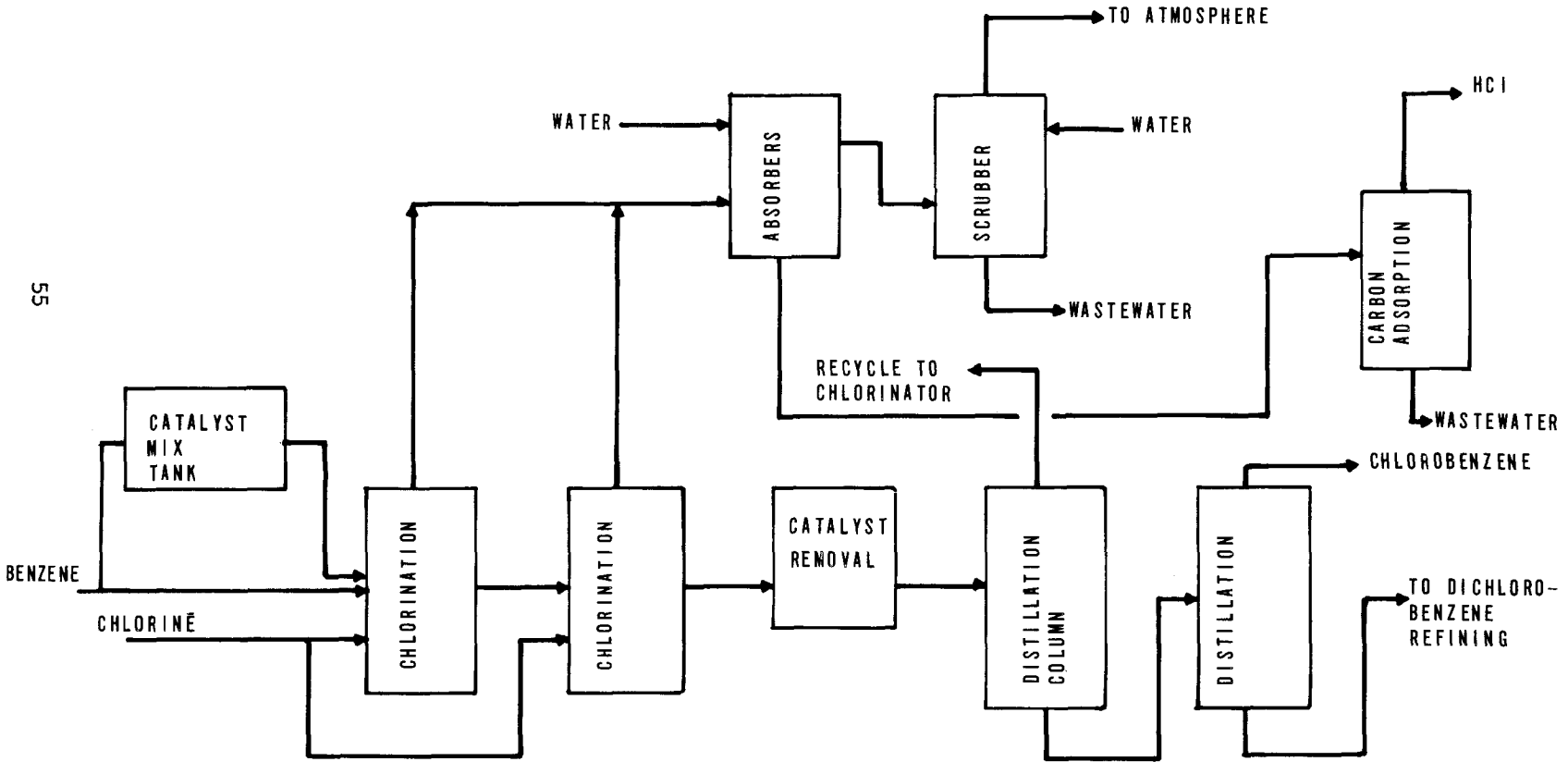

PROCESS FLOW	
liter/kkg	50
gal/1000/lb	6
BOD5	
mg/liter	300
kg/kkg	0.015
COD	
mg/l	7700
kg/kkg	0.38
TOC	
mg/l	4780
kg/kkg	0.239

1. Raw waste concentrations are based on unit weight of pollutant per unit volume of process waste waters.
2. Raw waste loadings are based on unit weight of pollutant per 1000 unit weights of product.

Product: Chlorinated Methanes (Methylene Dichloride, Chloroform, and Carbon Tetrachloride)

Process: Chlorination of Methyl Chloride and Methane Mixture

Process RWL Subcategory: B

Chemical Reactions:

$$CH_4 + Cl_2 \longrightarrow CH_3Cl + HCl$$

Methane — Methyl Chloride, Hydrogen Chloride

$$CH_3Cl + 2Cl_2 \longrightarrow CH_2Cl_2 + HCl$$

Methyl Chloride — Methylene Dichloride

$$CH_3Cl + 2Cl_2 \longrightarrow CHCl_3 + 2HCl$$

Methyl Chloride — Chloroform

$$CH_3Cl + 3Cl_2 \longrightarrow CCl_4 + 3HCl$$

Methyl Chloride — Carbon Tetrachloride

$$CH_2Cl_2 + Cl_2 \longrightarrow CHCl_3 + HCl$$

Methylene Dichloride — Chloroform

$$CHCl_3 + Cl_2 \longrightarrow CCl_4 + HCl$$

Chloroform — Carbon Tetrachloride

Typical Material Requirements:

The material requirements depend upon which of the chlorinated products is desired. In general, the chlorine consumption is 7% beyond theoretical needs, but may be lowered depending on the chloromethanes products mix. The methyl chloride requirement also is approximately 7% above theoretical needs.

Chloromethanes find their widest application as solvents. Methylene dichloride is used in the plastics field as a solvent for polycarbonates, isocyanates, and cellouse diacetate. As a urethane-foam blowing agent in Europe, it is important as the spinning solvent for cellulose acetate. Chloroform is used as a solvent for textile degreasing and

an extractant for food flavors, steroids, and antibiotics. Carbon tetrachloride is used as a solvent in nonflammable cleaning agents.

In addition to their wide use as solvents, there are numerous other applications of chloromethanes. Methylene dichloride is used as a nonflammable paint remover, and also in purification of steroids as a reaction medium, e.g., in the manufacture of phosphates, insecticides, and vegetable oil extracts. Two developments of great potential importance are the use of methylene dichloride as a polyurethane-foam blowing agent and in aerosal hair sprays.

Chloroform finds wide use as an intermediate in the production of other materials. In addition, chloroform is used in certain pharmaceutical formulations such as cough medicines, rubbing liniments, and anesthetics.

Carbon tetrachloride is used primarily in the manufacture of methylene chloride and chloroform. However, it is also used as a fluid in certain fire extinguishers.

Chlorinated methanes can be produced from methane, from methyl chloride, or from a mixture of both materials. The reactions may be carried out by either thermal or photo activation. The former, which requires a temperature of approximately 700°F, is preferred commercially, because it requires lower investment and maintenance costs, and allows more complete conversion of chlorine.

A typical process flow diagram for producing chloromethanes starting with a mixture of methane and methyl chloride is shown in Figure 4-5.

The feed methane is first purified and dried in a purification unit, and then is fed to the chlorination reactor along with fresh and recycled methyl chloride and chlorine gas. Following the reaction step, the chlorinated products are quenched and absorbed in a refrigerated mixture of recycle carbon tetrachloride and chloroform. Methane and HCl are taken overhead from the quench column and are absorbed in weak hydrochloric acid, which removes the HCl. The remaining methane is then passed through a caustic scrubber before being returned to the chlorination reactor.

The bottoms stream from the quench tower is stripped of its light constituents. These are absorbed in water to remove the remaining HCl, and are then neutralized with caustic solution. This light-product stream is then passed through a series of distillation towers from which methyl chloride,

FIGURE 4-5
CHLORINATED METHANES- CHLORINATION OF METHYLCHLORIDE AND METHANE MIXTURE

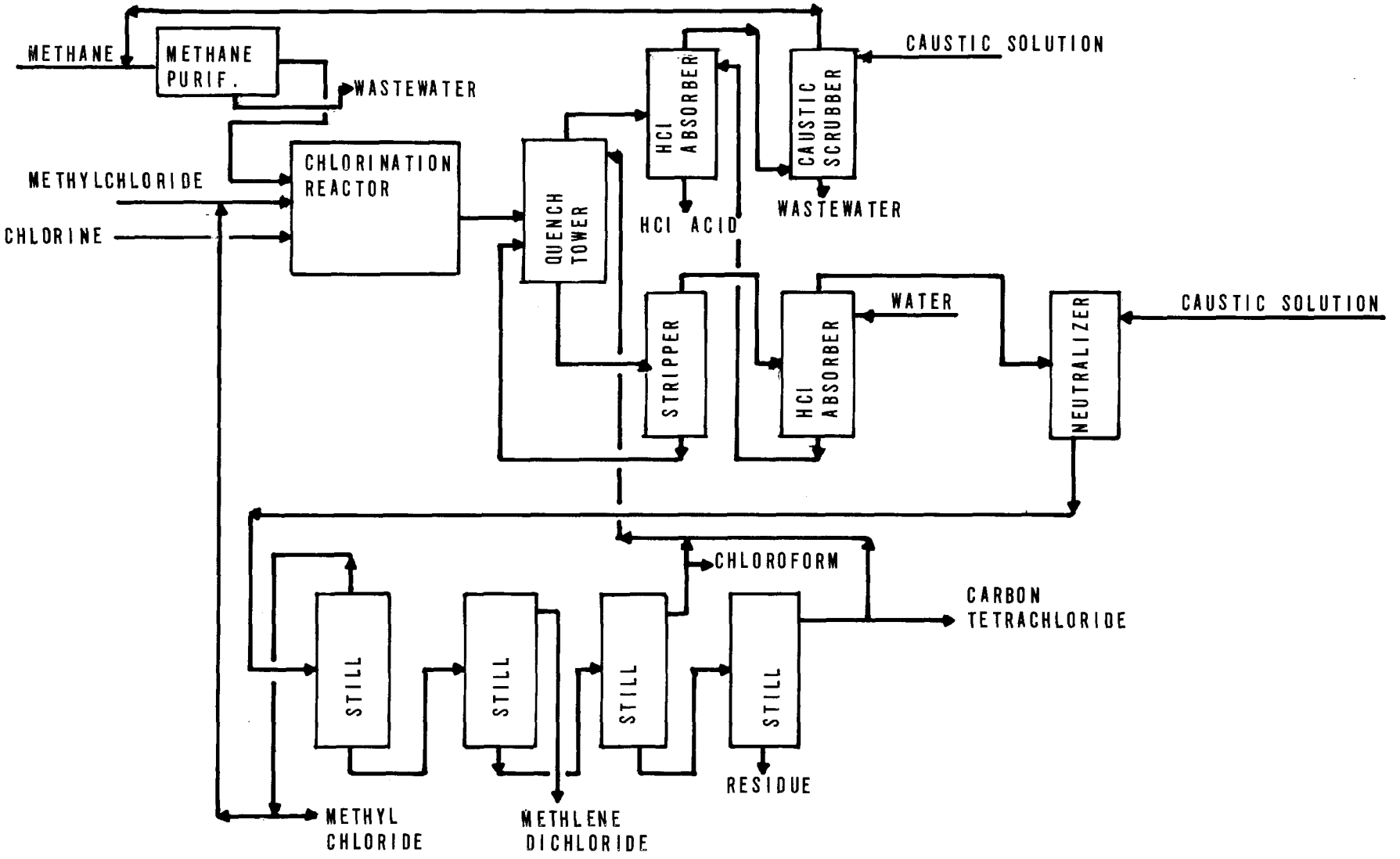

methylene dichloride, chloroform, and carbon tetrachloride are in turn obtained as final products for sale or recycled back to the process as raw material or as absorbent.

The major water pollution sources of the process are the waste streams discharged from the HCl absorber and the caustic scrubber. Process RWL calculated from the flow measurements and analyses of water samples obtained in the survey period are presented in the following tabulation. The analytical results also indicate that, in addition to the parameters shown in the tabulation, parameters such as pH and chloride may be at levels potentially hazardous to biological treatment processes unless acclimated to accept these wastes.

	Plant 1		Plant 2
	Sample Period #1	Sample Period #2	Sample Period #1
PROCESS FLOW			
liter/kkg	598	598	2800
gal/M lb	72	72	335
BOD5 RWL			
mg/liter[1]	7	18	77
kg/kkg[2]	0.004	0.011	0.22
COD RWL			
mg/liter[1]	113	385	335
kg/kkg[2]	0.07	0.23	0.94
TOC RWL			
mg/liter[1]	420	42	132
kg/kkg[2]	0.25	0.25	0.37

[1] Raw waste concentrations are based on unit weight of pollutant per unit volume of process waste waters.
[2] Raw waste loadings are based on unit weight of pollutant per 1,000 unit weights of product.

The data shown for Plant 2 was selected for BPCTCA raw waste load. These waste waters are presently neutralized and discharged to surface waters.

Product: Chlorotoluene

Process: Chlorination of Toluene

Process RWL Subcategory: B

Chemical Reaction:

$$C_6H_5CH_3 + Cl_2 \longrightarrow C_6H_4\ (CH_3)\ Cl + HCl$$

Toluene Chlorine Chlorotoluene Hydrogen Chloride

A simplified process flow diagram for the manufacture of chlorotoleune is shown in Figure 4-6. The chlorine gas is reacted with liquid toluene in the presence of a catalyst. The unreacted chlorine gas is removed in an absorption tower, and sent to the muriatic acid plant for reprocessing. The crude product mixture is then purified by passing through a series of distillation stills. The light ends and residues are disposed of by incineration, while the unreacted toluene is recyled back to the reactor.

Vacuum distillation is employed in purifying the crude product. The steam jets (with barometric condensers) used to pull the vacuum constitute the only waste water pollution source of the process. The process RWL calculated from flow determinations and the analyses of the waste stream are indicated in the tabulation below:

PROCESS FLOW	
liter/kkg	121,000
gal/M lb	14,500
BOD5 RWL	
mg/liter[1]	2
kg/kkg[2]	0.24
COD RWL	
mg/liter[1]	15
kg/kkg[2]	1.82
TOC RWL	
mg/liter[1]	2
kg/kkg[2]	0.24

[1] Raw waste concentrations are based on unit weight of pollutant per unit volume of contact process waste waters.

FIGURE 4-6
CHLOROTOLUENE - CHLORINATION OF TOLUENE

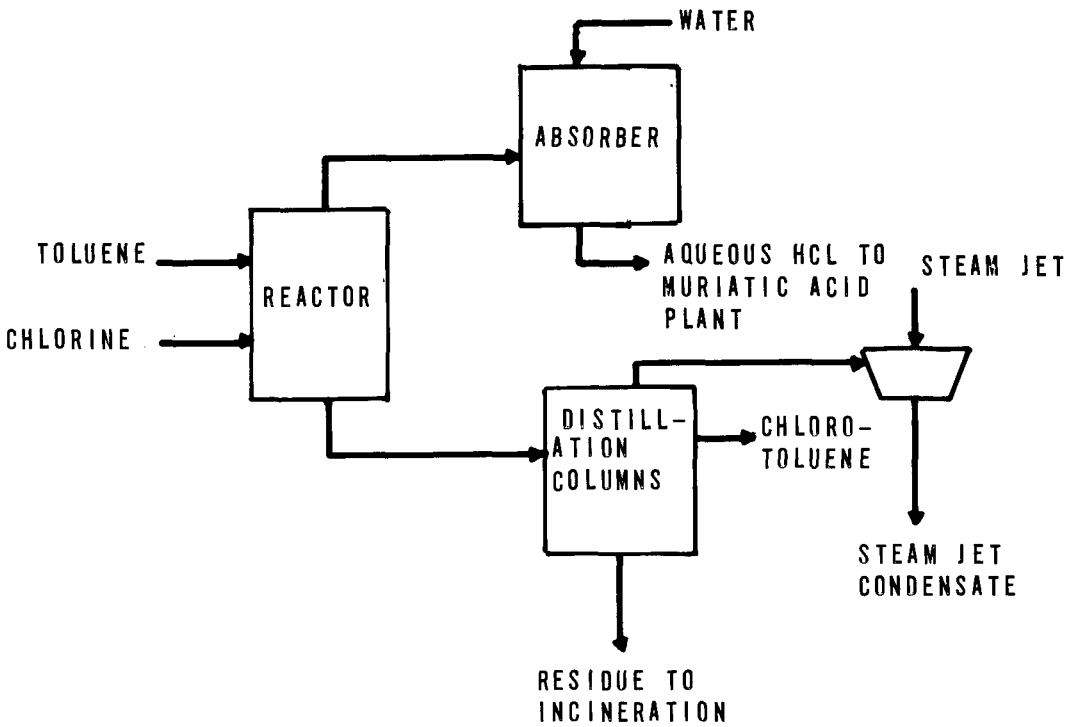

[2] Raw waste loadings are based on unit weight of pollutant per thousand unit weights of product.

The only waste water from this process is the large quantity of steam jet condensate from the vacuum still. The contaminant concentrations in these streams are, however, quite low. In the near future, the process will be modified from vacuum distillation to atmospheric distillation. This modification should substantially reduce the wastewater volume and pollutants. At the present time, all process waste water is discharged to the local municipal waste water treatment plant.

Product: Diphenylamine

Process: Deamination of aniline

Process RWL Subcategory: B

Chemical Reaction:

$$2\ C_6H_5NH_2 \longrightarrow C_6H_5NHC_6H_5 + NH_3$$

Aniline — Diphenylamine — Ammonia

Diphenylamine (DPA) is used extensively in the rubber chemicals field, generally as a retarder, and its derivatives are employed as antioxidants.

Production of diphenylamine may proceed by various routes; however, the plant visited during the field survey utilized a vapor-phase catalytic reaction involving the deamination of aniline. A simplified process flow diagram is shown in Figure 4-7.

As shown in the diagram, liquid aniline is pumped at a uniform rate from storage tanks into an externally-heated vessel which serves as preheater and vaporizer. In this vessel, aniline is vaporized, and the vapors are heated to a temperature of approximately 400°C to 500°C. Hot aniline vapors pass through the catalyst chamber, which is maintained at approximately 400°C to 550°C. The exit gases of the DPA converter then pass into an aniline stripper, in which aniline and other volatile constituents (such as ammonia, small amounts of water, and other volatile by-products) remain in the vapor state, while DPA condenses with some aniline and is drawn off as crude DPA. The crude product is then purified in a series of distillation columns.

The gases leaving the aniline stripper are cooled in an aniline condenser and a portion recycled to the aniline feed line. The vapors (containing mostly ammonia, small amounts of water, and other volatiles) pass to an ammonia scrubber.

FIGURE 4-7
DIPHENYLAMINE-DEAMINATION OF ANILINE

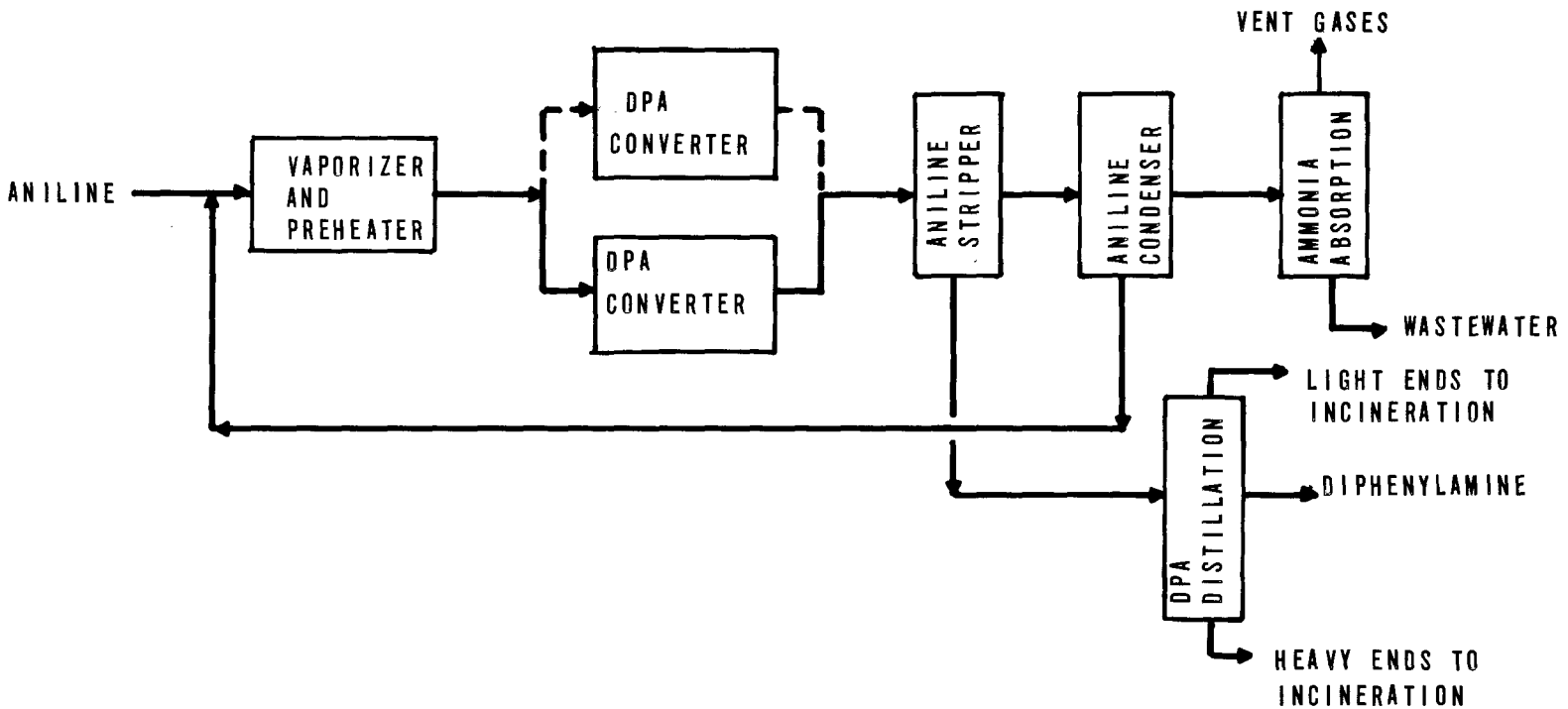

DPA convertors will not operate indefinitely, because the reaction causes a certain amount of decomposition of aniline, which deposits carbonaceous residues on the catalyst. These residues reduce the efficiency of the catalyst, and it is necessary to regenerate periodically. As a result, in a normal plant there is more than one DPA convertor. Some convertors are on a regeneration cycle while the remaining ones are on a production cycle. On the average, each production cycle lasts 50 hours.

Regeneration is affected by the following procedures:

1. Steam is introduced to vaporize the aniline and DPA.

2. Steam and air are introduced to burn the carbonaceous impurities deposited on the catalyst surface.

3. Steam is then introduced to purge the reactor.

4. An aniline purge is used to remove water vapor.

The off-gases resulting from the burning of tars are exhausted, and aniline and DPA are recycled.

The major waste water source in this process is the effluent from the ammonia scrubbing tower. The waste waters from the catalyst regeneration process are usually disposed of by incineration and are not included in the raw waste load calculations. The total process RWL from flow measurements and the analyses of the waste streams during the sampling survey are presented in the following tabulation:

	Sample Period #1	Sample Period #2
PROCESS FLOW		
liter/kkg	526	526
gal/M lb	63.0	63.0
BOD RWL		
mg/liter[1]	220	108
kg/kkg[2]	0.116	0.057
COD RWL		
mg/liter[1]	550	650
kg/kkg[2]	0.287	0.339
TOC RWL		
mg/liter[1]	450	420

kg/kkg	0.237	0.218

[1] Raw waste concentrations are based on unit weight of pollutant per unit volume of process waste waters.
[2] Raw waste loadings are based on unit weight of pollutant per 1000 unit weights of product.

The arithmetic average of the values presented in the foregoing tabulation are for BPCTCA.

All cooling water used during the production of diphenylamine is indirect; tube and shell exchangers are employed. Steam usage is 1.15 lbs per lb product (including the steam employed during catalyst regeneration), and approximately 75% of the condensates are collected. Steam used in the regeneration cycle is live steam, and the rest is reboiler steam.

Diphenylamine can also be produced by catalytic liquid-phase process in which a mixture of primary arylamine and catalyst is mixed with reactant aniline in a stainless steel reaction chamber. The temperature of the reaction mixture is raised to 175°C to 450°C, and the pressure is permitted to build up to keep the reaction mixture in a liquid state. During the course of the reaction, ammonia is split and vaporized. The ammonia vapor pressure maintains the reaction mixture in a liquid state. After holding the reaction mixture for the requisite time at the desired temperature and pressure, the hot mixture is permitted to flow into a receiver. Upon cooling the mixture to about 275°C, the catalyst is substantially crystallized from the mixture. The crude reaction mixture can be filtered and then purified to the final product.

Product: Perchloroethylene

Process: Chlorination of chlorinated hydrocarbons

Process RWL Subcategory: B

Chemical Reactions:

$$\underset{\text{Hydrocarbons}}{\text{Chlorinated}} + \underset{\text{Chlorine}}{Cl_2} \longrightarrow \underset{\text{Perchloroethylene}}{Cl_2C = CCl_2}$$

Perchloroethylene is used largely in dry-cleaning and vapor degreasing. Dry-cleaning consumes approximately 85 percent of the total; the rest goes into general solvent services and as intermediate for fluorocarbons.

A process flow diagram for the manufacture of perchloroethylene is shown in Figure 4-8.

The chlorinated hydrocarbons and chlorine gas are reacted thermally (rather than catalytically) at temperatures in the range of 500-700°C. The reactions are highly exothermic, and control of heat transfer is a key to smooth and efficient reactor performance.

The reaction mechanism may be visualized in terms of an initial, very rapid, thermally activated, free-radical chlorination to transient compounds having high chlorine/carbon ratios. These transient compounds decay quickly, primarily to the low free-energy forms. The perchloroethylene-carbon tetrachloride mixture then shifts toward equilibrium in the rate-controlling step.

The reactor effluent is quenched, and the gas stream leaving the quench vessel is absorbed with recycled HCl solution in an absorption tower. The remaining unabsorbed chlorine gas is then dehydrated and recycled back to the reactor.

The liquid reaction product stream goes from the quench vessel to the separator, where the aqueous stream is removed as HCl solution. The product mixture (carbon tetrachloride and perchloroethylene) is separated by distillation. The perchloroethylene-carbon tetrachloride mixture is controlled by suitable recycle and by provision of appropriate residence time in the reactor.

FIGURE 4-8

PERCHLOROETHYLENE-CHLORINATION OF CHLORINATED HYDROCARBONS

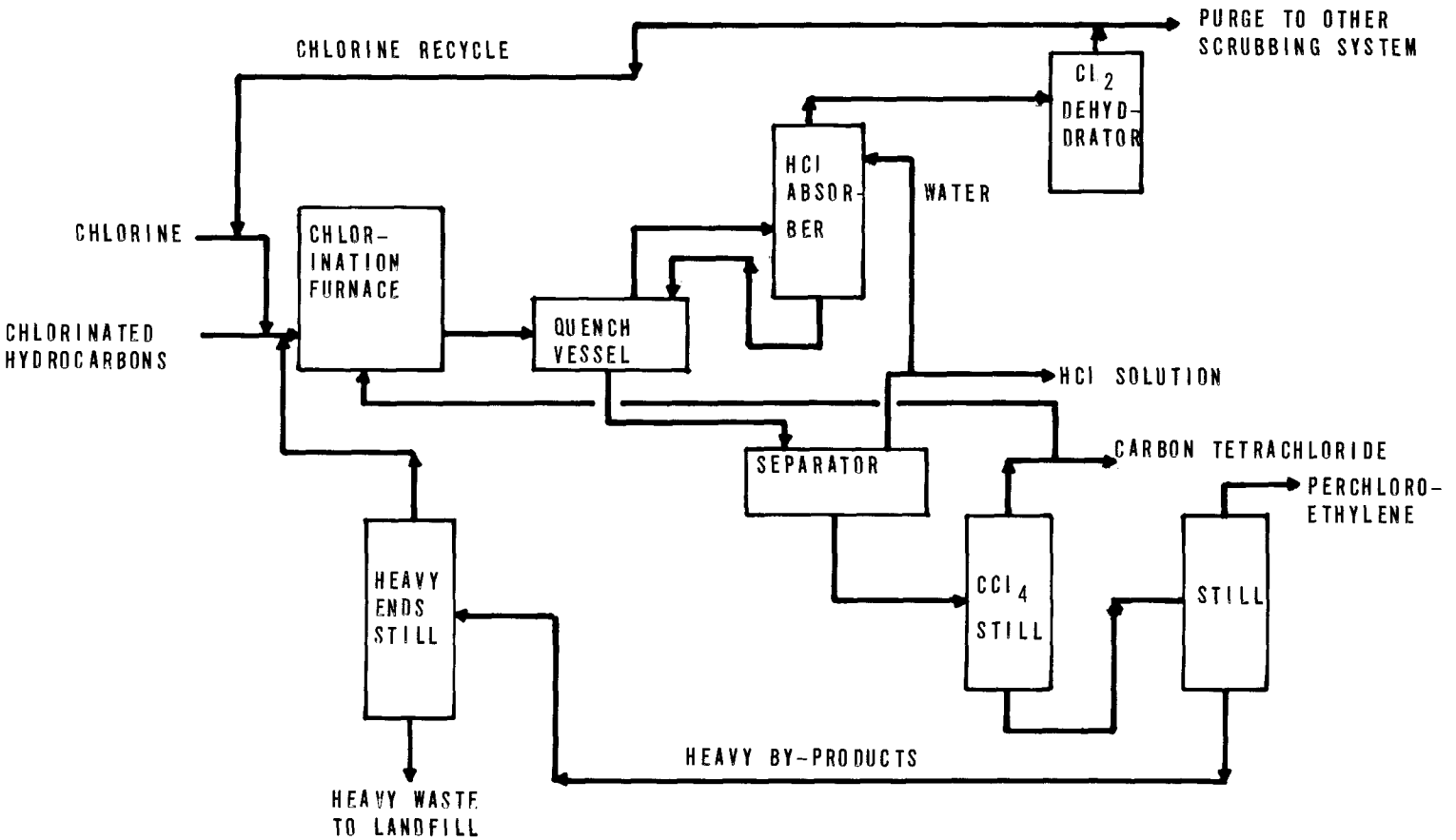

The waste water pollution sources of this process are pump-seal leakages and miscellaneous reactor washdowns. Process RWL calculated from flow measurements and analyses of the waste water streams are shown in the following tabulation.

	Sample Period #1	Sample Period #2
PROCESS FLOW		
liter/kkg	5,400	5,400
gal/M lb	643	643
BOD5 RWL		
mg/liter[1]	84	80
kg/kkg[2]	0.449	0.427
COD RWL		
mg/liter[1]	357	695
kg/kkg[2]	1.92	3.73
TOC RWL		
mg/liter[1]	30	31
kg/kkg[2]	0.164	0.169

[1] Raw waste concentrations are based on unit weight of pollutant per unit volume of process waste waters.
[2] Raw waste loadings are based on unit weight of pollutant per 1000 unit weights of product.

An average of the foregoing values was selected for BPCTCA RWL. The wastes from this process are currently disposed of by deep-well injection.

An alternative method for the manufacture of perchloroethylene is by the Detrex-SD process, in which the feedstocks (ethylene and chlorine) enter a liquid-phase chlorination reactor. Temperature and pressure are moderate, and concentrations are carefully controlled by recycle quantity and composition to give the desired product distribution at optimum economics.

In the classical route, perchloroethylene is prepared from acetylene, via trichloroethylene. The chemical reaction is shown as follows:

The chlorine and aceytlene are brought into contact with each other in a reactor at a temperature of 250-300°C in the presence of barium chloride deposited on carbon as catalyst. The product, tetrachloroethane, is then dehydrochlorinated in a catalytic reactor to produce trichloroethylene, which is chlorinated at 80-90°C over a catalyst containing 0.2-0.3% $FeCl_3$ to yield pentachloroethene. The perchloroethylene is then obtained by the dehydrochlorination of pentachloroethane by milk of lime at 110°C and 200 mm Hg.

Product: Phthalic Anhydride

Process: Oxidation of o-Xylene

Process RWL Subcategory: B

Chemical Reactions:

$$\underset{\text{o-xylene}}{C_6H_4(CH_3)_2} + 3O_2 \longrightarrow \underset{\text{phthalic anhydride}}{C_6H_4(CO)_2O} + 3H_2O$$

Phthalic anhydride is commonly produced by either of two methods: oxidation of o-xylene, or oxidation of naphthalene. In the U.S., about 80% of the capacity is still based on napthalene, although there is a definite trend in favor of the vapor-phase oxidation of o-xylene. This trend is based primarily on economics (o-xylene feedstock is cheaper than naphthalene). A description of the production of phthalic anhydride using a naphthalene feedstock is found in the following section.

Phthalic anhydride has become one of our most important intermediates. It is commonly used during the production of plasticizers. The less volatile phthalates are used principally in wire and cable coatings which are subject to higher temperatures. Phthalic anhydride derivatives are also used in the production of alkyl resins. These resins are in turn used in coatings, such as latex paints, thermosetting acrylic finishes, and epoxy coatings. Phthalic anhydride is used directly in making a number of dyes such as eosin, quinoline yellow, phenolphthalein, and copper phthalocyanine. It is also used during the production of anthraquinone and anthraquinone derivatives by condensation (Friedel Crafts) procedures.

Production of phthalic anhydride by oxidation of o-xylene is based on vapor-phase, fixed-bed technology. Typical operating conditions are 5 psig and 188°C. The process uses a carrier supported vanadium pentoxide catalyst, which normally lasts from 3 to 5 years. The crude product obtained is 99-99.5% phthalic anhydride, with some maleic, benzoic, and other acids.

An ortho-xylene oxidation process flow diagram is shown in Figure 4-9. Filtered air is first compressed and preheated in a heat exchanger. The o-xylene feedstock is also preheated and vaporized by injection into the hot-air

FIGURE 4-9

PHTHALIC ANHYDRIDE—OXIDATION OF O-XYLENE

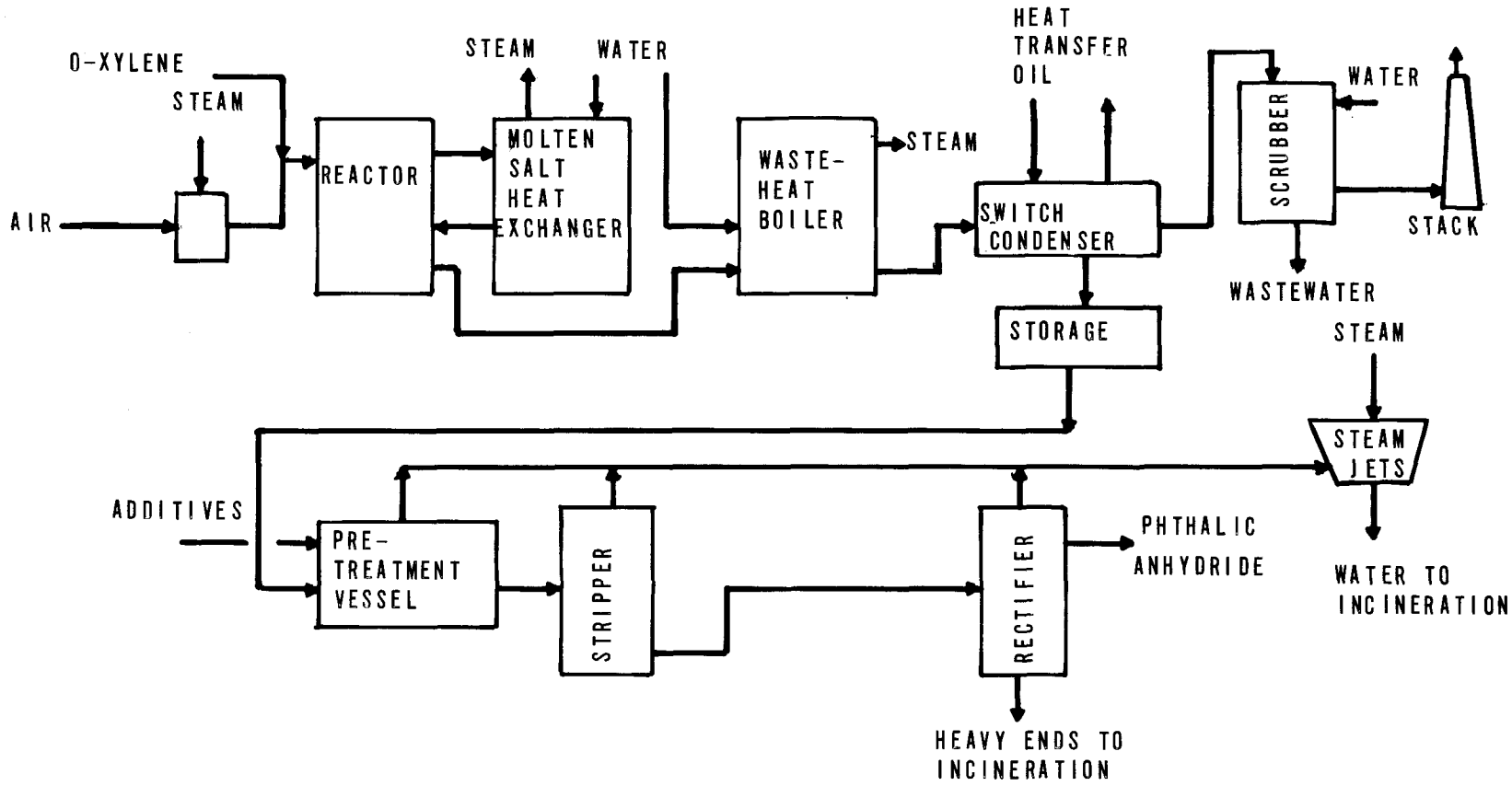

stream; unevaporated o-xylene is trapped before the stream enters the reactor.

During the reaction step, a considerable quantity of heat is generated. The heat is removed by molten salt circulating on the shell side of the reactor. The molten-salt solution is passed from the top of the reactor to a heat-exchange system, where process steam is produced. Gases leaving the reactor at 375°C are passed through a waste-heat boiler for additional steam generation. Cooled gases enter a bank of automatically controlled switch condensers.

When a condenser is on the crystallization cycle, cold mineral oil is circulated through the coils to cool and crystallize phthalic anhydride from the gaseous phase. When the condenser is switched to phthalic anhydride recovery, hot oil is circulated through the coils to remelt the crude product. The crude product is then drawn off to an intermediate storage tank. Residual gases from the condensers are scrubbed to reduce the volatile organic content. The scrubbed gas passes through a demister and is vented to the atmosphere.

Crude product from the storage tank is then passed through a heater and into the continuous pretreatment section. Dissolved phthalic acid is dehydrated under a slight vacuum to the anhydride. Additives may be introduced at this point to remove impurities produced by polycondensation of heat-sensitive compounds. The crude phthalic anhydride is then pumped through a pre-cooler to a continuous distillation section. Two columns are employed, both operating under vacuums created by two-stage steam ejectors. Waste waters from these ejectors are sent to an incinerator. In the first-stage stripper column, maleic anhydride and benzoic acid are separated as overheads. Bottoms from the first-stage column are passed to a second-stage rectifier column. Final product (99.99% phthalic anhydride) is withdrawn as distillate overhead.

Since waters from stream ejectors are disposed of by incineration, the only water pollution source of the process is the waste stream withdrawn from the vent gas scrubber. Process RWL calculated from the flow measurements and analyses of water samples obtained during the survey period are shown in the following tabulation:

PROCESS FLOW	
liter/kkg	593
(gal/M lb)	71.2

BOD5 RWL	
mg/liter[1]	215
kg/kkg[2]	0.128
COD RWL	
mg/liter[1]	1,080
kg/kkg[2]	0.642
TOC RWL	
mg/liter[1]	34
kg/kkg[2]	0.02

[1] Raw waste concentrations are based on unit weight of pollutant per unit volume of process waste waters.
[2] Raw waste loadings are based on unit weight of pollutant per 1000 unit weights of product.

These waste loads are considered as the basis for BPCTCA. They are combined with other wastes in this plant and treated in a biological system prior to discharge.

Product: Phthalic Anhydride

Process: Oxidation of Naphthalene

Process RWL Subcategory: B

Chemical Reactions:

$$C_{10}H_8 + 4\tfrac{1}{2}O_2 \xrightarrow{V_2O_5} C_6H_4(CO)_2O + 2CO_2 + 2H_2O$$

Naphthalene Phthalic Anhydride

In the United States, approximately 80% of the present phthalic anhydride capacity is based upon the oxidation of naphthalene. However, there is a trend toward the vapor-phase oxidation of o-xylene, which has been discussed in the previous section. Phthalic anhydride may be produced from naphthalene using either a fixed or fluid catalyst bed. In addition to process variations, the purity of the final product is a function of the reactor type, in that maleic anhydride is formed as a by-product in the fixed-bed reactor but it is not formed in the fluidized-bed reactor.

During the sampling period, an installation employing a fluidized-bed reactor was visited. The fluid catalyst consisted of a finely powdered vanadium catalyst.

A process flow diagram for the naphthalene oxidation process is shown in Figure 4-10. The reactor containing the catalyst is heated to an operating temperature of approximately 480°C. Molten naphthalene is then introduced into the reactor and vaporized by direct contact with the catalyst charge. The vapors become admixed immediately because of the agitated nature of the catalyst bed. The air-naphthalene vapor mixture passes upward through the bed, and the naphthalene is converted to phthalic anhydride, carbon dioxide, carbon monoxide, and water vapor. The product gases, after leaving the dense catalyst phase, pass through a settling zone and into a cyclone system for removal of the catalyst. Recovery of the catalyst is reported to be 100%; thus, make-up catalyst is not required. Following removal of the catalyst, the product gases pass through a condensing system. Aqueous products are then purified, using a series of distillation columns.

FIGURE 4-10
PHTHALIC ANHYDRIDE- OXIDATION OF NAPHTHALENE

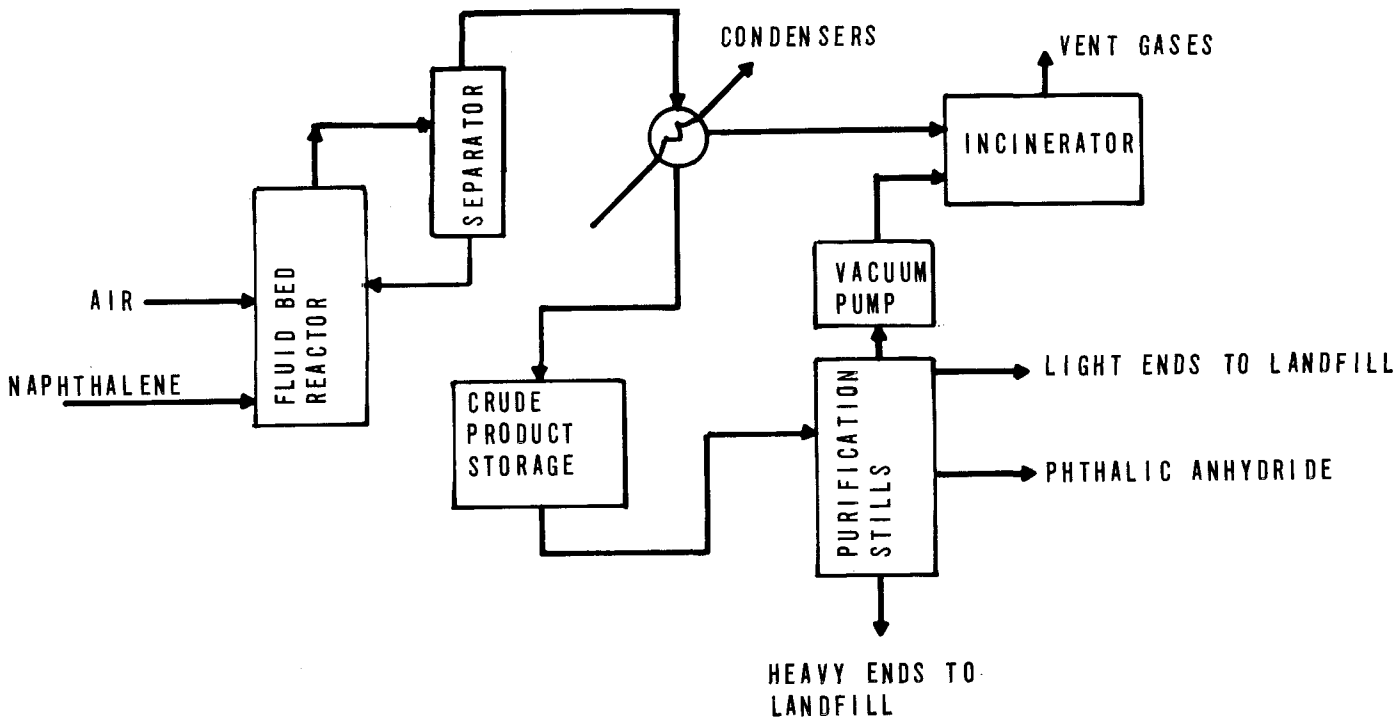

There are two major discharges from the phthalic anhydride process area. The most significant of these discharges is a gaseous waste stream vented during the reaction step. The gas contains a high concentration of organics and is discharged to an incinerator.

The second discharge is primarily steam vapor from a vacuum jet in the distillation section. The stream is contaminated with a low concentration of phthalic anhydride. This stream is also discharged to the incinerator.

A portion of the material sent to the incinerator was condensed and analyzed. These data were used to calculate the RWL shown in the following tabulation:

PROCESS FLOW	
liters/kkg	2,290
gal/M lb	275
BOD_5 RWL	
mg/liter[1]	46,700
kg/kkg[2]	107
COD RWL	
mg/liter[1]	125,300
kg/kkg[2]	287
TOC RWL	
mg/liter[1]	52,400
kg/kkg[2]	120

[1] Raw waste concentrations are based on unit weight of pollutant per unit volume of process waste waters.
[2] Raw waste loadings are based on unit weight of pollutant per 1000 unit weights of product.

This waste loading is not discharged to any sewer but rather burned in a liquid waste incinerator.

Since the only source of waste water is periodic process washings, the raw waste load approaches zero. Although it is recognized that pollutant loadings from the washings contribute to the raw waste load, it is not possible to obtain representative samples of the waste waters. Thus, equipment washings have not been included in the raw waste evaluations.

Noncontact waste waters associated with phthalic anhydride include an involuntary blowdown from the internal tempered water system in the crude-product condensing step. In the

condensing step, there is a swing between the use of steam and tempered water. During the swing, the tempered water condenses the trapped steam and is discharged. The only pollutants are corrosion inhibitors which are in the initial water.

Product: Hexamethylenediamine (HMDA)

Process: Hydrogenation of Adiponitrile (ADN)

Process RWL Subcategory: B

Chemical Reactions:

$$\underset{\text{Adiponitrile}}{NC(CH_2)_4CN} + 4H_2 \xrightarrow{NH_3} \underset{\text{Hexamethylenediamine}}{H_2N(CH_2)_6NH_2}$$

Hexamethylenediamine (HMDA) is used in combination with adipic acid to form polyhexamethylene adipamide, commonly known as nylon. The demand for HMDA is estimated to be 900 million pounds by 1975, and 1,250 million pounds by 1980.

Figure 4-11 presents a process flow diagram of hexamethylenediamine production via the hydrogenation of adiponitrile.

The hydrogenation of adiponitrile is carried out by contacting hydrogen with an ammonia-solvent-ADN liquid mixture in a fixed-bed reactor containing 8-14 mesh cobalt-oxide catalyst at 100-250°C and 200-700 atmospheres. This transformation is characterized by its high selectivity to HMDA at almost complete conversion of ADN.

Fresh adiponitrile and the recycle solvent (toluene) are mixed at 32°C before being pumped to about 4,400 psia pressure and heated to 88°C. This stream is then mixed with fresh and recycled hydrogen and ammonia. The gaseous effluent is recycled, while the liquid effluent is depressurized from the reactor to 3,000 psia and heated to 400°F. This stream goes to a separator followed by a flasher for ammonia removal. A portion of the ammonia is compressed and recycled to the reactor, and the remainder proceeds to an absorber. Water is used to absorb the ammonia, which then proceeds to an ammonia stripper. The stripped ammonia is recycled to the reactor, while the bottoms from the column go to the sewer.

The liquid product stream from the flasher is sent to a toluene stripper. Overhead toluene is recycled to the reactor, and the bottoms are recovered for further purification.

FIGURE 4-11
HEXAMETHYLENEDIAMENE-HYDROGENATION OF ADIPONITRILE

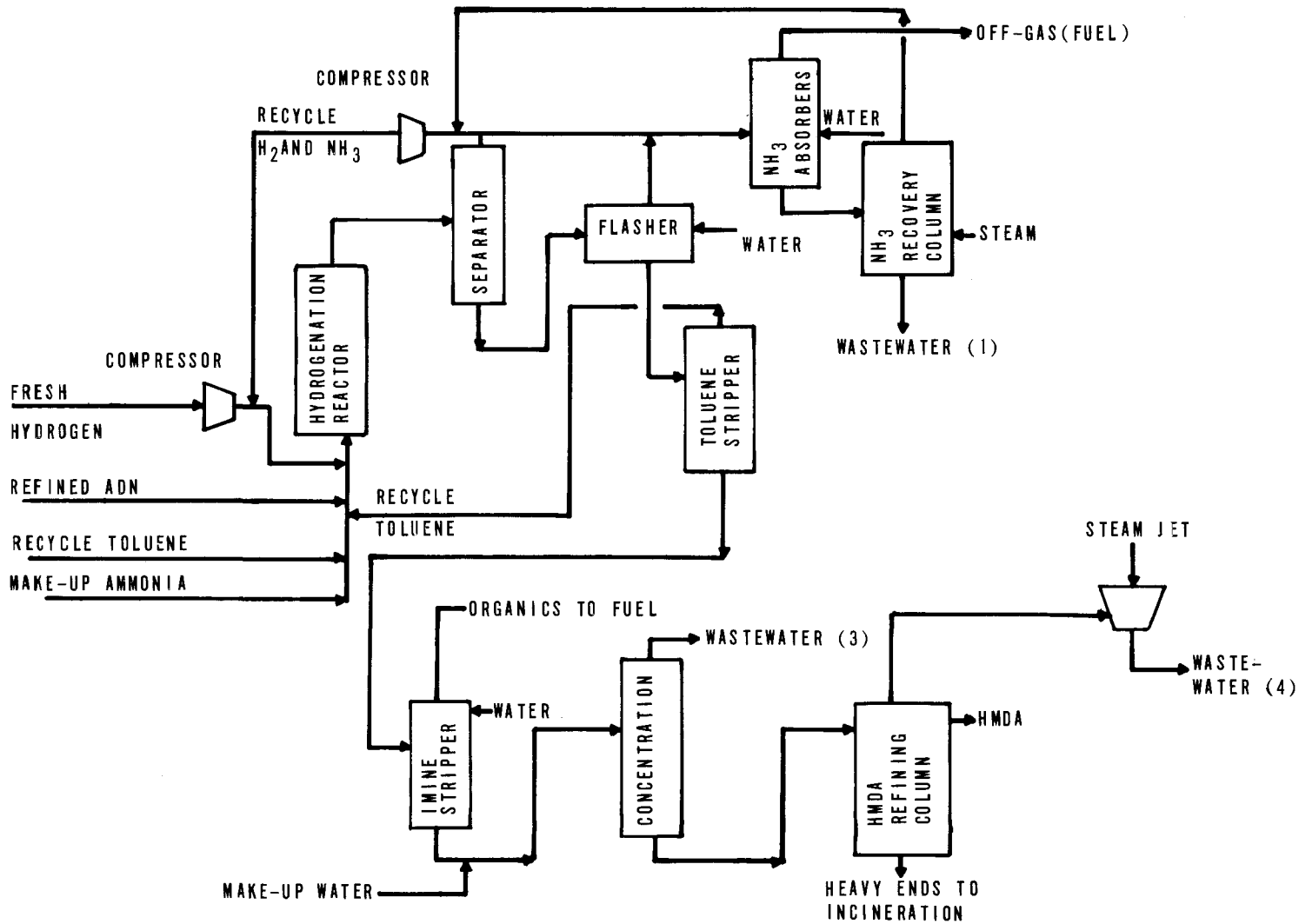

The first step in refining consists of removal of HMDA (water azeotrope) as bottoms from the first column which is operated at 18 psia. The overhead water-amine mixture is discarded for fuel, and the bottoms are sent to the medium boiler stills (concentrators) to recover HMDA. The bottoms stream from the medium boiler column is then discharged to the HMDA refining column. Refined HMDA is taken overhead under vacuum.

The major water pollution sources of this process are the bottoms from the ammonia recovery column, water withdrawn as overhead from the medium boiler stills, and the steam jet condensate from the HMDA refining column. Process RWL calculated from flow data and the analyses of waste water samples collected in the survey period are presented in the following tabulation.

	Plant 1 Sampling Period #1	Plant 1 Sampling Period #2	Plant 2 Sampling Period #1	Plant 2 Sampling Period #2	Plant 2 Sampling Period #3
PROCESS FLOW					
liter/kkg	1,695	1,695	1,010	1,010	1,010
gal/M lbs	203	203	121	121	121
BOD_5 RWL					
mg/liter[1]	58,850	12,800	5,500	4,500	1,800
kg/kkg[2]	99.8	21.7	5.55	4.54	1.82
COD RWL					
mg/liter[1]	71,850	62,400	20,200	22,200	20,300
kg/kkg[2]	122	106	20.4	22.4	20.5
TOC RWL					
mg/liter[1]	17,800	31,400	4,600	5,700	5,000
kg/kkg[2]	30.2	53.2	4.65	5.76	5.05

[1] Raw waste concentrations are based on unit weight of pollutant per unit volume of process waste waters.
[2] Raw waste loadings are based on unit weight of pollutant per 1000 unit weights of product.

The data shown in the above tabulation reveal that there are significant differences in RWL from the plants surveyed. There are three major reasons for these differences. Plant 2 partially recycles the bottoms from the ammonia recovery column to the HMDA refining section and incinerates all the light-end organic wastes from the refining portion of the

operation. Plant 1 is equipped with a stack which uses water to quench the unabsorbed vapors.

An average value from the data collected at Plant 2 was derived. It is noted that the process wastes from both Plant 1 and Plant 2 are currently disposed of by deep-well injection.

The following paragraphs describe the pretreatment system used at Plant 2. It should be noted that this system also handles wastes from adiponitrile manufacture.

Aqueous waste from the hexamethylene diamine (HMDA) process is fed along with by-product brine from other plant operations into a settling tank; HMDA-waste comprises less than 10% of the total flow. Sludge which settles out is pumped to a pit for further settling, while the main stream goes through primary filtration in precoated, horizontal, leaf filters. After a second filtration, the waste stream is pumped into injection wells for disposal. Backwash from both filtration steps is pumped to the sludge pits.

The primary purpose of the waste treatment area is to remove all solids which might cause plugging of the injection wells.

Noncontact cooling water usage for both plants is tabulated below:

Plant 1 - 453,000 liters/kkg of product
Plant 2 - 31,500 liters/kkg of product

HMDA can also be produced by the ammonolysis of 1,6 hexanediol, a process which will be described in the following sub-section.

Product: Hexamethylenediamine (HMDA)

Process: Ammonolysis of 1,6 - Hexanediol

Process RWL Subcategory: B

Chemical Reaction:

$$\underset{\text{Hexanediol}}{HO(CH_2)_6OH} + 2\ NH_3 \xrightarrow{H_2} \underset{\text{Hexamethylenediamine}}{H_2N(CH_2)_6NH_2} + 2\ H_2O$$

A typical process flow diagram of hexamethylenediamine production via the ammonolysis of 1,6 - Hexanediol is shown in Figure 4-12.

The ammonolysis reactor is a flooded, fixed-bed, catalytic reactor. The fresh and recycled hydrogen and liquid ammonia are pumped to the reactor at a pressure of 3,000 psig. The liquid ammonia is preheated to a temperature of 180 - 220°C and fed to the reactor bottom. At this temperature, the ammonia is above its critical temperature (132°C). The organic feed stream, consisting of recycle hexamethyleneimine (HMI) (30 wt %) plus fresh and recycle hexanediol is also pumped as a liquid into the reactor. By means of two heat exchangers (one a product-feed exchanger, and the second a preheater), the organic liquid phase is raised to the reaction temperature of 180 - 220°C. Positive displacement pumps are necessary to transfer both the liquid NH_3 and the liquid organic feed at the 3,000-psig pressure level.

Within the reactor, the liquid organic phase floods the fixed-bed catalyst, and the liquid product stream overflows through a discharge line at the top of the bed. Both H_2 and NH_3 enter the bottom of the fixed bed as gases, but because of the high pressure and the solvent action of the HMI, the NH_3 gas is absorbed in the HMI and subsequently reacts in the liquid phase with the 1,6-hexanediol to produce HMDA. Since the concentration of HMI in the liquid phase is already at its equilibrium value, further conversion of the diol and NH3 to the imine is negligible. A reflux condenser is situated at the top of the reactor and the liquid condensate is returned to the top of the fixed bed. The vapor stream leaving this condenser is used to pre-cool the hydrogen gas prior to recycle to the compressor, and to condense NH_3 vapor carryover from the reactor. This ammonia condensate is returned to the reactor ammonia feed.

FIGURE 4-12

HEXAMETHYLENEDIAMINE- AMMONOLYSIS OF 1,6-HEXANEDIOL

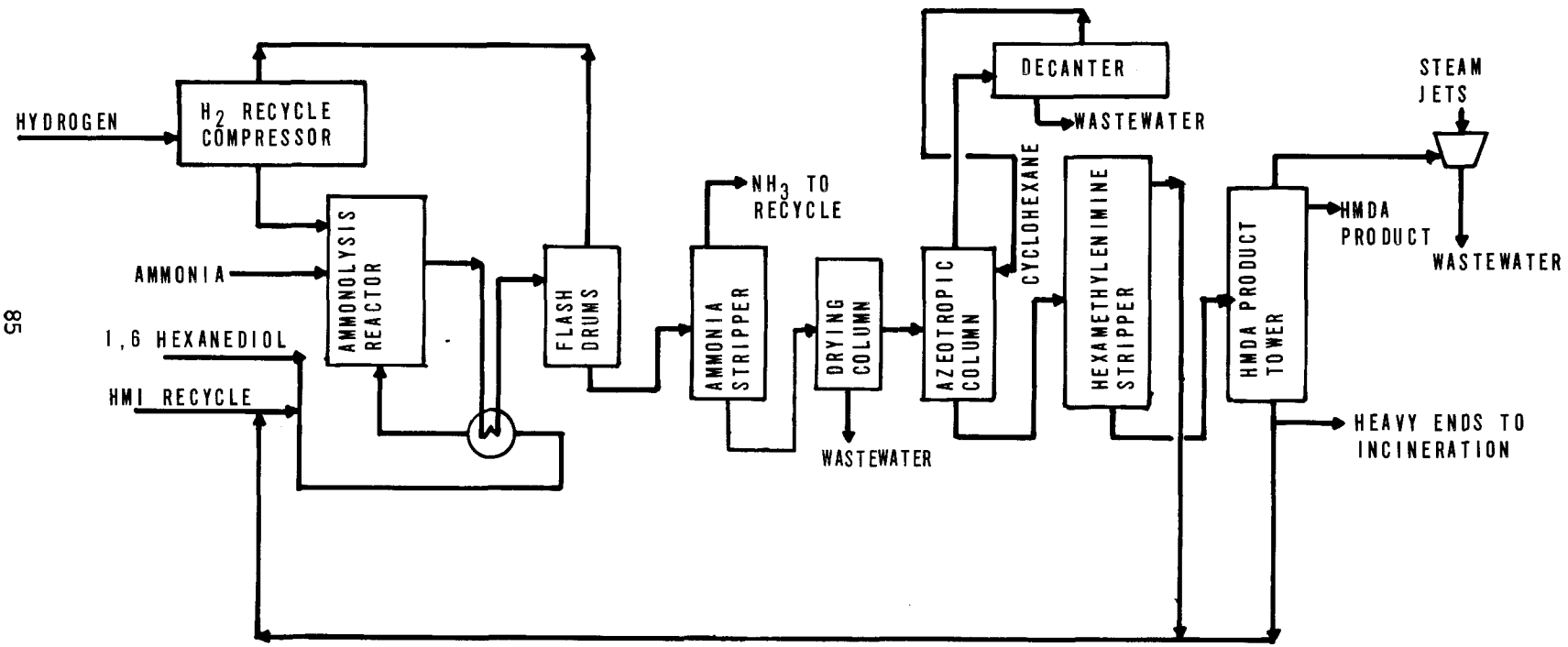

Catalysts suitable for the ammonolysis step include Raney cobalt, Raney nickel, reduced copper, Raney copper, and nickel on kieselguhr. The preferred catalyst is pelletized Raney nickel. At reaction conditions, an ammonia feed stream of 19 moles NH_3 per mole of diol (2.73 kg NH_3/kg diol) and a hydrogen supply of 0.125 moles H^2 per mole of NH_3 (0.0147 kg H_2/kg NH_3) have been found to give high yields. A yield of 93 mole % HMDA on a diol-reacted basis is practical, and conversions of 70 mole % per reactor pass are used for design. A residence time of 1 hour is typical.

The liquid reactor product consisting of HMDA, HMI, dissolved NH_3 and H_2, unreacted diol, by-product H_2O, and high boilers is heat exchanged with the incoming HMI-diol feed stream and then fed to a series of three flash drums. The flashing operation provides a stagewise reduction in pressure and recovers the dissolved hydrogen as a vapor for refeeding to the compressor. A small portion of the dissolved NH_3 is also vaporized, and this is recovered in the knockout drums of the compressor facility. The major part of the dissolved ammonia is recovered in the ammonia stripper column. Ammonia is liquefied overhead by a water-cooled condenser, from which it is pumped back to the NH_3 feed tank.

The ammonia stripper column operates at about 200 psig, to condense the ammonia overhead at 55°C. The bottoms temperature averages about 200°C. The bottoms product (containing HMDA, HMI, diol, H_2O and high boilers) is fed to a drying column and then to the water stripper column. The water stripper operates as an azeotropic column using cyclohexane as the entraining agent to promote water separation. The use of cyclohexane counteracts the formation of the H_2O/HMI azeotrope. (This azeotrope has been reported as a means of separating the HMI from the HMDA.) The overhead stream from this tower consists of a heterogeneous cyclohexane-water azeotrope, which condenses as a two-phase liquid in the overhead decanter. The cyclohexane upper layer is returned to the column as a reflux, and the lower layer, mostly water, is sent to waste. This column normally operates at atmospheric pressure, with an overhead temperature of about 74°C and a bottoms temperature of 100°C - 107°C.

The bottoms from this tower, essentially anhydrous, are fed to the HMI stripper column to remove HMI for recycling. This stripper column is operated under a vacuum of about 200 mm Hg. such that reboiler temperatures in the range of 310-330°F are not exceeded. Temperatures of 390°F and higher tend to promote reactions between the HMDA and the unreacted

diol to produce high boilers. The HMI stripper bottoms are then fed to the HMDA product column, where the HMDA is taken overhead at 99.94% purity. The bottoms, consisting of a small percentage of HMDA and the unreacted diol plus high boilers, are recycled to the diol feed tank. Periodic buildup of the high-boiler concentration will necessitate an intermittent purge of the bottoms. Alternatively, a 1,6-hexanediol polishing still may be added to provide for continuous separation of the diol from the high boilers. In actual operation, the reactor conditions may possibly be adjusted so that the high-boiler content is minimized to some equilibrium value.

The major waste water pollution sources for this process are waste waters from the drying column, the decanter associated with the azeotropic column, and the steam jet condensate. The analytical results obtained from the sampling survey are shown in the following tabulation.

PROCESS FLOW	
liter/kkg	1,100
gal/M lb	132
BOD_5 RWL	
mg/liter[1]	3,630
kg/kkg[2]	4.0
COD RWL	
mg/liter[1]	10,600
kg/kkg[2]	11.7
TOC RWL	
mg/liter[1]	2,260
kg/kkg[2]	2.5

[1] Raw waste concentrations are based on unit weight of pollutant per unit volume of process waste waters.
[2] Raw waste loadings are based on unit weight of pollutant per 1000 unit weights of product.

It is noted that most of the waste water upon which the previous RWL calculations are based is currently disposed of via deep-well injection. Only wastes such as slab washdown water and storm runoff are treated in an aerated lagoon.

Product: Methyl Ethyl Ketone (MEK)

Process: Dehydrogenation of Secondary Butyl Alcohol (SBOH)

Process RWL Subcategory: B

Chemical Reactions:

$$CH_3CH(OH)CH_2CH_3 \longrightarrow CH_3COCH_2CH_3 + H_2$$

Sec-butyl Alcohol methyl ethyl ketone

A flow diagram for this process is shown in Figure 4-13. Methyl ethyl ketone (MEK) is obtained by the dehydrogenation of secondary butyl alcohol in a process analogous to the production of acetone from isopropyl alcohol.

Preheated vapors of secondary butyl alcohol are passed through a reactor, containing a catalytic bed of zinc oxide or brass (zinc copper alloy) maintained at 400 to 550°C. The reaction takes place at atmospheric pressure.

The reaction gases are condensed by passage through a brine-cooled condenser. The uncondensed gas may be scrubbed with water or a nonaqueous solvent to remove any entrained ketone or alcohol from the hydrogen-containing gas.

The condensed product is run into a distillation column and fractionated. The main fraction (methyl ethyl ketone), boiling between 78°C and 81°C, is obtained in an 85 to 90 percent yield based on the weight of secondary butyl alcohol charged.

The following tabulation summarizes the raw waste load data obtained from the two plants sampled. The RWL shown for Plant 2 is much higher because some of the light hydrocarbons purged (used elsewhere or burned) in Plant 1 are discharged in the waste water from Plant 2.

	Plant 1	Plant 2
PROCESS FLOW		
liters/kkg	1,310	795
gal/M lb	157	95
BOD_5 RWL		

FIGURE 4-13

METHYL ETHYL KETONE (MEK)–DEHYDROGENATION OF SEC-BUTYL ALCOHOL (SBOH)

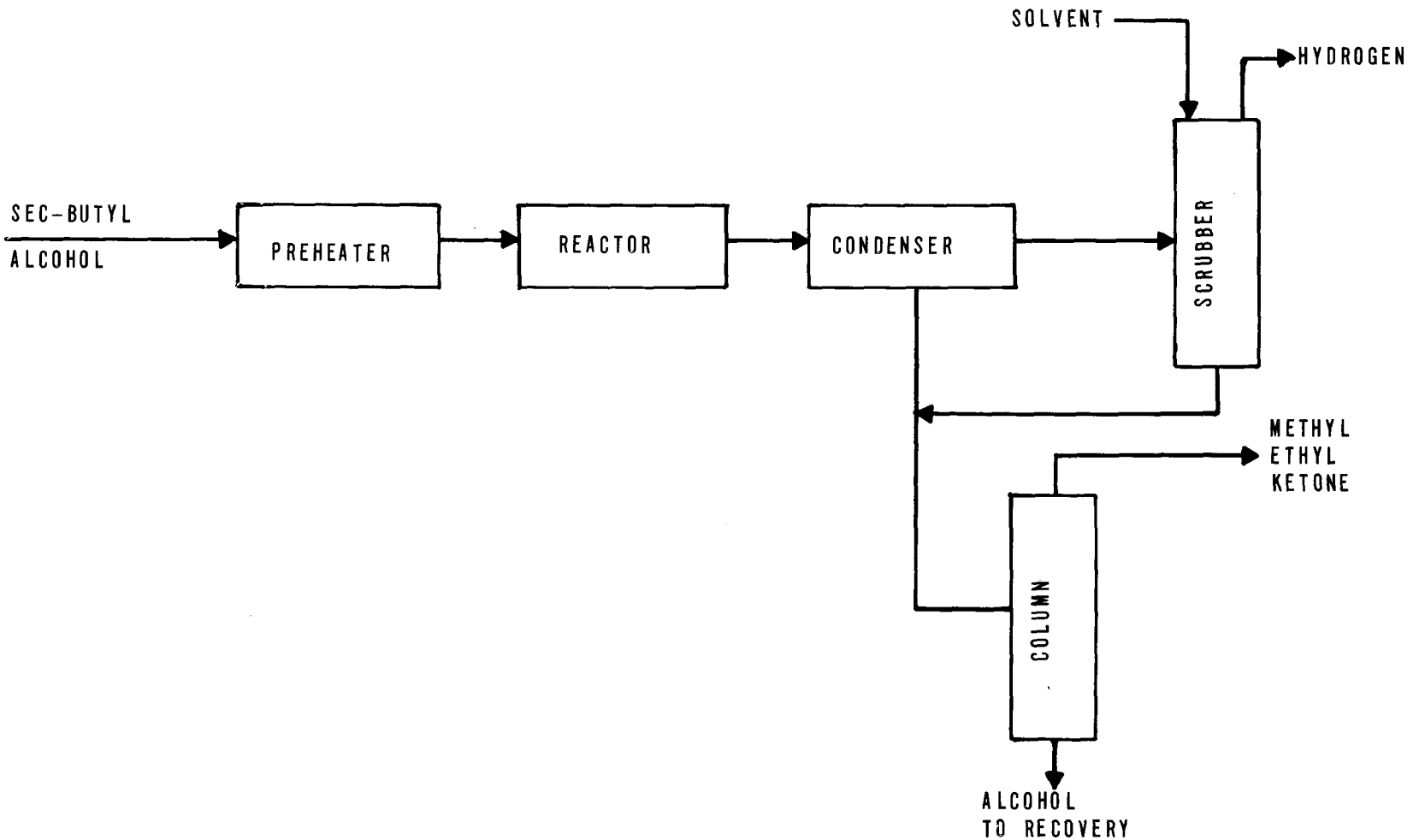

mg/liter[1]	3,000	91,000
kg/kkg[2]	3.92	72.1
COD RWL		
mg/liter[1]	1,627	260,000
kg/kkg[2]	2.13	206
TOC RWL		
mg/liter[1]	521	102,000
kg/kkg[2]	0.68	80.9

[1] Raw waste concentrations are based on unit weight of pollutant per unit volume of process waste waters.
[2] Raw waste loadings are based on unit weight of pollutants per 1000 unit weights of product.

The RWL from Plant 1 was chosen as BPCTCA basis.

Product: Tricresyl Phosphate (TCP)

Process: Condensation of Cresol and Phosphorus Oxychloride

Process RWL Subcategory: B

Chemical Reaction:

$$3\ C_6H_4(CH_3)OH + POCl_3 \longrightarrow (C_6H_4(CH_3)O)_3PO + 3HCl$$

cresol (mixture of o-, m-, and p-isomers) — phosphorus oxychloride — tricresyl phosphate

TCP has the property of reducing the flammability of films. This property has led to its use as a plasticizer for nitrocellulose and vinyl chloride plastics. This flammability-reducing property qualifies it for use as an additive in hydraulic fluids and lubricants. TCP is also used as a gasoline additive.

Figure 4-14 presents a simplified process flow diagram of tricresyl phosphate production. Basically, the processing involves purification and then condensation of the raw materials, preliminary purification, and final purification of the product.

Cresol supply has been a problem to manufacturers of tricresyl phosphate for a number of years, both as to availability and quality. Until the post-war period, almost all cresol for tricresyl phosphate manufacture was derived from coal tar acids. Most recently, improved processing of carbolate liquids from petroleum sources has resulted in cresols essentially equivalent to those produced from coal tar acids. Furthermore, the shortage of cresols which has long plagued tricresyl phosphate producers and which, probably more than any other factor, had led to commercialization of cresyl diphenyl phosphate in the post-war period, appears to have been eliminated. Since the ortho form of tri-cresyl phosphate is considerably more toxic than those derived from m- and p-cresols, the cresol used for the production of plasticizer grade tricresyl phosphate is primarily a mixture of m- and p-cresol. Although the xylenol content may be allowed to reach as high as 30 or 40%, the o-cresol content is held below 3%. Because of the random distribution of the three isomers in the resulting phosphate ester, the tri o-cresyl phosphate content of the product is quite low. The cresols used for

FIGURE 4-14

TRICRESYL PHOSPHATE- CONDENSATION OF CRESOL AND PHOSPHOROUS OXYCHLORIDE

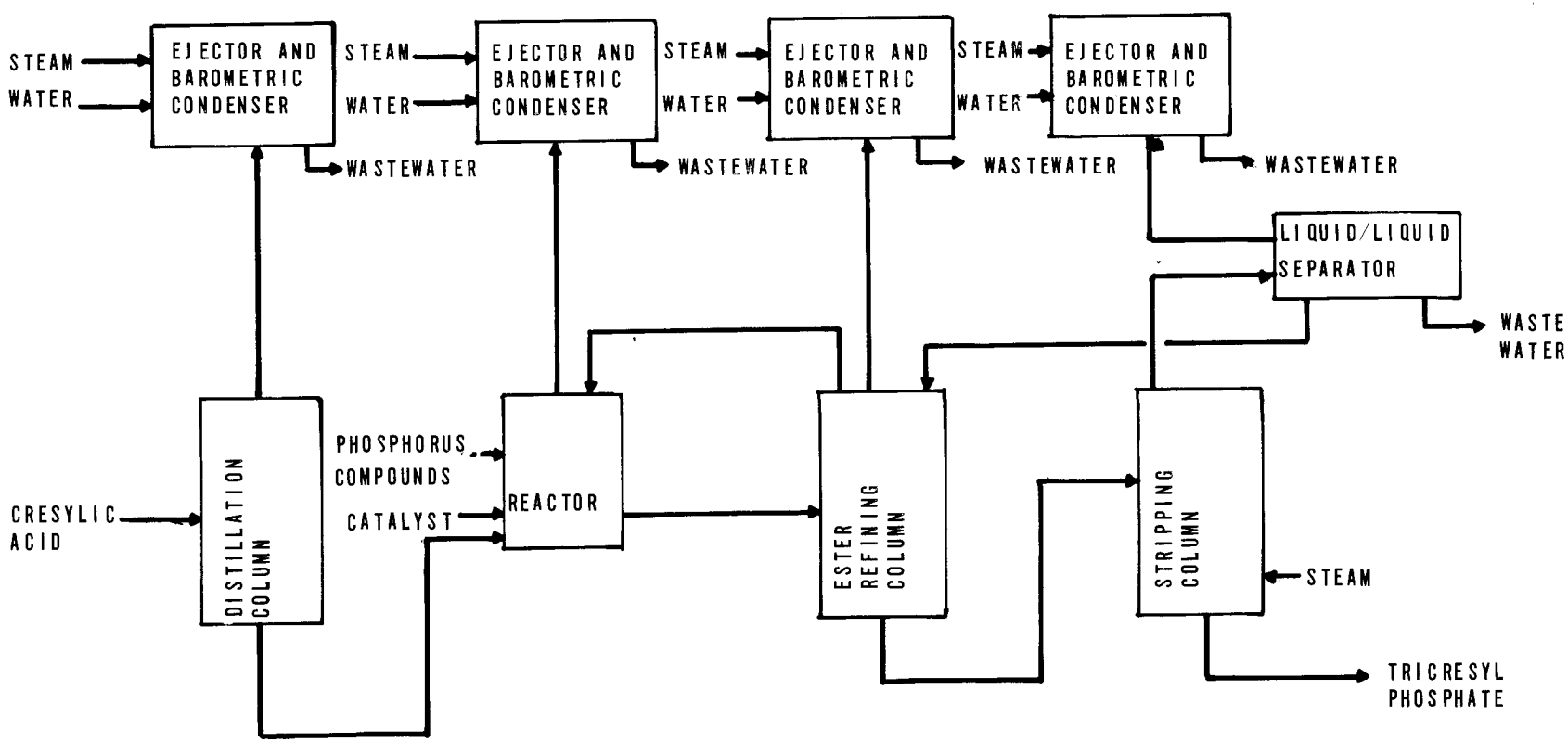

production of tricresyl phosphate for addition to gasoline may contain a slightly higher o-cresol content and a higher percentage of xylenols.

Cresols react rather readily with phosphorus oxychloride at a temperature of approximately 100°C to form a mixture of aryl and diaryl phosphoryl chlorides, with only small amounts of triaryl phosphate. The diaryl phosphoryl chloride being the least reactive, more drastic conditions are required to obtain complete reaction. The presence of significant quantities of aryl phosphoryl chlorides not only reduces yield but leads to difficulty in subsequent refining operations. Therefore, the condensation of cresol and the oxychloride is carried out at elevated temperatures (150°C to 300°C) depending upon the catalyst, and purification schemes employed. A slight excess of cresol favors complete esterification. The time required for the condensation will vary with the catalyst and temperature of reaction. Loss of oxychloride in the hydrogen chloride off-gas is minimized by operating under moderate pressure and/or venting through a condenser. Many catalysts have been reported, but the metal halides appear to be preferred, because they permit condensation times of 6-9 hours at temperatures of approximately 200°C. Because the reaction mixture is highly corrosive, glass-lined or alloy kettles are used. The condensation reaction may be operated continuously, by permitting the reaction mixture to pass through a series of reactors at successively higher temperatures.

The purification techniques employed appear to have become rather well standardized. Variation lies rather in the sequence of application, the use of classical batch washing in lieu of the use of columns, and the extent of purification required for product end-use. Preliminary purification may involve direct flash distillation of the crude reaction mixture. The crude reaction product may be first be washed with dilute caustic to neutralize any hydrogen chloride and to hydrolyze and extract traces of partial esterification products and unreacted cresylic compounds. The addition of lime to the reaction mixture prior to distillation, to minimize corrosion, has been reported. Final purification of plasticizer grade products employs washing with dilute caustic and water (to remove traces of organic acidity), treatment with dilute permanganate solution (to improve color and oxidation stability of the product, a widely accepted quality factor), dehydration by heating under reduced pressure, bleaching with activated carbon and finally filtration. The use of an amphoteric metal in conjunction with an alkaline wash has also been claimed as a color-improvement refining step. In

production of tricresyl phosphate as a gasoline additive, some or all of the final purification steps may be omitted; low acidity is required, but color and oxidation stability are not critical.

As indicated in the process flow diagram, each step of the process is performed under vacuum conditions, and each step is equipped with steam jets and barometric condensers. The major pollution sources are the waste streams from these barometric condensers. The analytical results from the sampling program are presented in the following tabulation.

PROCESS FLOW	
liter/kkg	28,000
gal/M lbs	3,355
BOD	
mg/liter[1]	40
kg/kkg[2]	1.12
COD	
mg/liter[1]	408
kg/kkg[2]	11.4
TOC	
mg/liter[1]	70
kg/kkg[2]	1.96

[1] Raw waste concentrations are based on unit weight of pollutant per unit volume of process waste waters.
[2] Raw waste loadings are based on unit weight of pollutant per one thousand unit weights of product.

By using surface condensers it is possible to substantially reduce the process flow requirements. Noncontact waste waters include cooling water flows and steam condensate; the cooling water usage is approximately 740 kg per kkg of product, while condensate flow to the sewer is at the rate of 0.96 kg per kkg of product.

The process RWL shown above are considered for BPCTCA determination. All wastes from the plant are currently discharged to the municipal sewer system.

Product: Adiponitrile

Process: Chlorination of Butadiene

Process RWL Subcategory: B

Chemical Reactions

$$\underset{\text{Butadiene + Chlorine}}{CH_2CH\ CH\ CH_2 + Cl_2} \longrightarrow \text{Mixture of isomeric dichlorobutenes} \xrightarrow{NaCN}$$

$$\underset{\text{Dicyanobutene}}{NCCH_2CH = CH\ CH_2CN} \xrightarrow{H_2} \underset{\text{Adiponitrile}}{NC\ (CH_2)_4CN}$$

Adiponitrile (ADN) is commonly used during the manufacture of hexamethylene diamine (HMDA). Hexamethylene diamine is in turn used as a raw material during the production of Nylon 6/6.

A schematic flow diagram of the process is given in Figure 4-15, and the general process information is described in the following paragraphs:

The first step in the manufacture of ADN via butadiene is the vapor-phase chlorination of butadiene. The reaction is carried out at 250°C and at pressures slightly above atmospheric. The inlet section of the reactor is designed to insure complete and rapid mixing of the reactants, and the rest of the vessel constructed to guarantee plug-flow conditions, which favor the high degree of chlorine conversion desired. By-product formation is minimized if the molar ratio of butadiene to chlorine is kept around 6.5 to 1 and if the vapor phase is diluted with nitrogen gas to keep a 10% (volume) of inerts in the reactor feed stream. The ratio of fresh to recycle butadiene is approximately 0.2 to 1. When the chlorine conversion is close to 100%, the molar yield of chlorine to chlorinated butenes is 95%. The relative amount of the 1,4 and 3,4 dichlorobutene isomers is of no importance since in subsequent reaction steps both isomers are converted to the same final product. The composition of the chlorinated butenes is as follows: 93.4 wt % dichlorobutenes, 1.6 wt % low boilers and 4.9 wt % high boilers. The vapor-phase reaction is carried out in an empty reactor. The reactants enter at 120°C and are heated up to the reaction temperature (250°C) by the heat evolved during the reaction, which is 39 kilocalories per mole.

FIGURE 4-15
ADIPONITRILE-CHLORINATION OF BUTADIENE

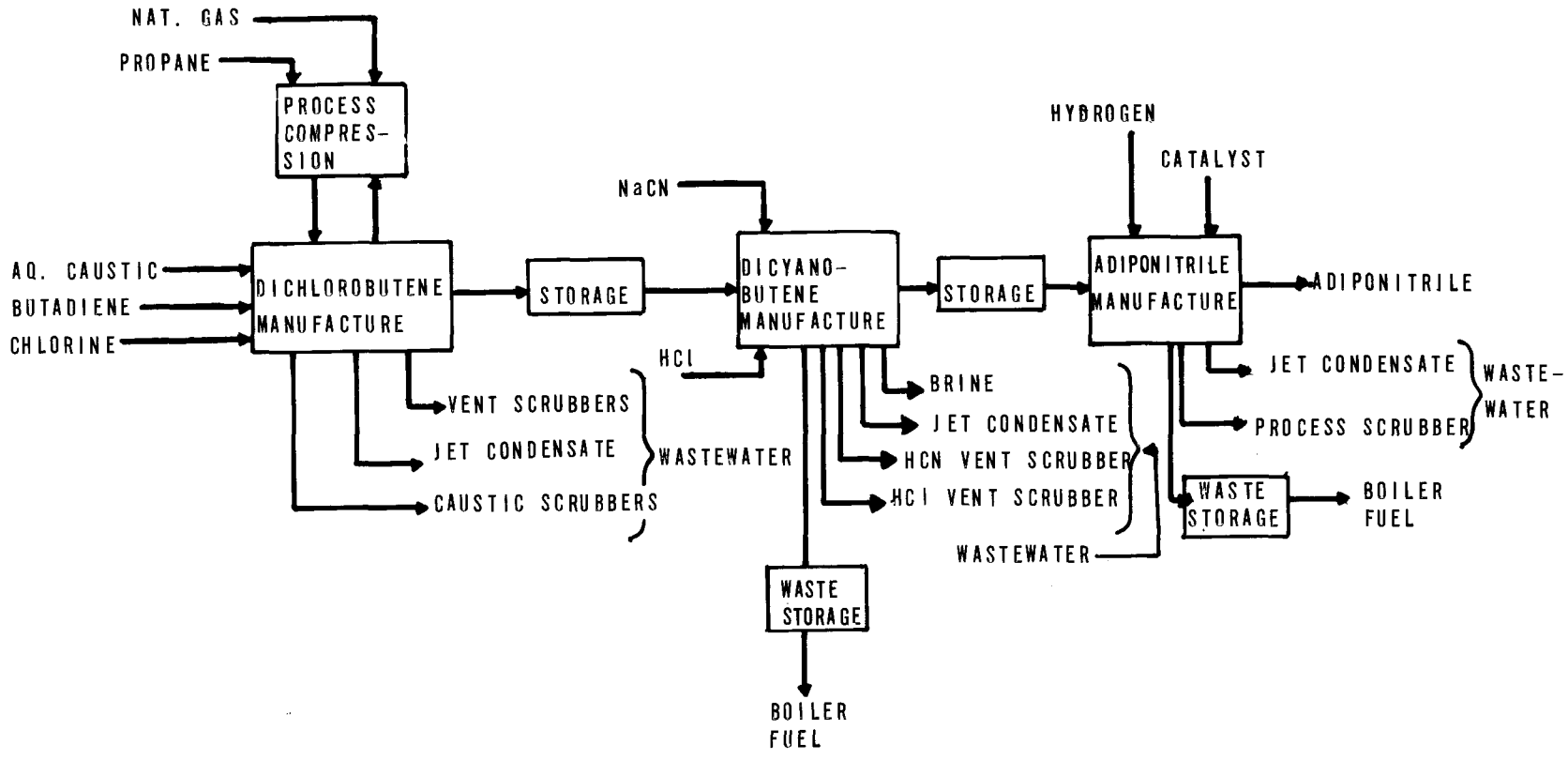

The effluent stream from the reactor is cooled down to room temperature, and condensed. The unreacted butadiene is separated from the liquid phase, which contains the chlorinated products, and recycled back to the reactor. The liquid phase is sent to the cyanization section of the plant. This liquid is composed of a mixture of dichlorobutenes, chlorobutenes, chlorinated butanes, and heavy materials such as tar and polymeric compounds.

The cyanization reaction is carried out in the liquid phase at 100°C and under atmospheric pressure in the presence of an inert gas such as nitrogen. The reaction is catalyzed by an aqueous mixture of cuprous chloride, copper powder, and cuprous cyanide. The molar ratio of hydrogen cyanide to dichlorobutenes is close to 2.3 to 1. The composition of the liquid feed to the reactor is given below on a weight percent basis.

cuprous cyanide	0.93
calcium carbonate	15.6
water	54.6
hydrogen cyanide	9.6
dichlorobutenes	19.5

The reaction time to achieve a 92.5 mole % conversion to 1,4-dicyanobutenes is approximately 40 minutes.

The next steps in the production of ADN are the isomerization and purification of the cyanobutenes. The purpose of isomerization is the conversion of some of the 1,4-dicyanobutene-2 to its isomer, 1,4-dicyanobutene-1. The purpose of purification is to render the crude dicyanobutene mixture non-corrosive.

The liquid reaction product stream leaving the cyanization reactor is cooled to 25°C. The cyanobutenes and organic by-products are extracted with benzene and diluted until the benzene concentration is approximately 66% by weight. This organic mixture is sent to an agitated tank where the temperature is raised to 60°C and the pH adjusted with 10% sodium hydroxide to 11.5. The two liquid phases that result are separated in a liquid-liquid separator; the aqueous phase is sent to the waste treatment plant, while the organic phase, after being heated to 70°C, is sent to another agitated tank where more (10%) sodium hydroxide is added until its weight percent in the second aqueous phase formed is around 15. These two liquid phases are agitated vigorously in the tank which has an average residence time of 25 minutes. The two-phase effluent stream is sent to a decanter where the organic and aqueous phases are separated.

This second aqueous phase is also sent to the waste treatment tank and the organic phase (containing the isomeric mixture of 1,4-cyanobutenes) is sent to the adiponitrile plant.

The benzene-cyanobutene mixture is then diluted with benzene until the cyanobutene concentration is 20% by weight, and then fed to the hydrogenation reactor. This reaction vessel contains a packed bed of activated charcoal promoted with 2% (by weight) palladium. The hydrogenation reaction is carried out under a hydrogen pressure of 400 psig at a temperature between 100 and 120°C. The hydrogen is bubbled concurrently with the liquid at a ratio of 35 moles of hydrogen per mole of dicyanobutene. The liquid space velocity in the reactor is approximately 0.4 reactor volumes of liquid per hour per volume of catalyst. The molar conversion of cyanobutene is 95%, with a selectivity to adiponitrile of 99%. Since the reaction is quite exothermic, the reactor must be equipped with an efficient heat removal system. For example, the reaction is carried out inside of tubes packed with catalyst while cooling water runs through shell side of the reactor. The catalyst has an active life of about 500 hours. It can be easily regenerated by passing hydrogen at 500°C over the catalyst until no more sulfur is evolved from the reactor tubes.

The reactor effluent is cooled down to room temperature and the hydrogen separated from the liquid organic phase, recycled water and vacuum jet condensates. The latter two waste streams are typical of a Subcategory B vapor-phase manufacturing operation. Process raw waste loads calculated from flow measurements and analyses of these streams are shown in the following tabulation:

	Adiponitrile			
	Sample Period #1	Sample Period #2	Sample Period #3	Average
PROCESS FLOW				
liter/kkg	9766	9766	9766	9766
(gal/M lb)	1170	1170	1170	1170
BOD_5 RWL				
mg/liter[1]	1250	2850	1800	1970
kg/kkg[2]	12.2	27.8	17.6	19.2

COD RWL				
mg/liter[1]	15,000	14,400	12,000	13,800
kg/kkg[2]	146	141	118	135
TOC RWL				
mg/liter[1]	4600	4500	4450	4500
kg/kkg[2]	44.9	43.8	43.4	44.0

[1] Raw waste concentrations are based on unit weight of pollutant per unit volume of process waste waters.
[2] Raw waste loadings are based on unit weight of pollutant per 1000 unit weights of product.

The analytical results (shown in Section V) indicate that the pollutants in the waste waters (such as ammonia nitrogen, sulfate, cyanide, chloride, and copper) are at levels which may be potentially hazardous to biological treatment processes. It should be noted that although biological treatment was chosen as the model treatment system most generally applicable for BPCTCA, several of the process plants surveyed currently utilize other means of disposal, such as deep-well injection. This was the case with the adiponitrile plant sampled. The raw waste loads shown previously are all treated by filtration prior to disposal by deep-well injection. In this regard, it should be noted that the adiponitrile plant also sampled noncontact cooling water on a once-through basis. The volume of cooling water amounts to 424,000 liters/kkg of adiponitrile. When it becomes necessary to treat the wastes from this adiponitrile plant in a biological system, a multi-stage biological system combined with in-plant controls to lessen the discharge of inhibitory compounds may be required.

Product: Benzoic Acid and Benzaldehyde

Process: Catalytic Oxidation of Toluene with Air

Process RWL Subcategory: B

Chemical Reactions:

$$2C_6H_5CH_3 + 3O_2 \longrightarrow 2C_6H_5COOH + 2H_2O$$

Toluene — Benzoic acid

$$C_6H_5CH_3 + O_2 \longrightarrow C_6H_5CHO + H_2O$$

Toluene — Benzaldehyde

A simplified flow diagram for this oxidation process is shown in Figure 4-16. Toluene and air, with a mixture of recycle gas and toluene, are combined in the reactor. Reaction temperatures may range from 150°C to 500°C, with a corresponding pressure range of 10 to 1 atmospheres. Specific manufacturers operate at different conditions. Depending upon the operating conditions, the material in the reactor may be in the liquid or vapor phase. Reaction conditions may be varied to give different selectivities to benzoic acid or benzaldehyde. The process RWL's have been calculated on the basis of the total production of benzoic acid and benzaldehyde during the sampling period.

The catalysts most frequently used consist of oxides of metals belonging to the fifth or sixth groups of the periodic table. A mixture of uranium (93 percent) and molybdenum oxides (7 percent), impregnated on a pumice or asbestos carrier, is claimed to give relatively high yields of benzaldehyde with low percentages of toluene loss via complete combustion. The addition of small amounts of copper oxide to the catalyst mixture reduces by- product maleic anhydride formation. A cobalt acetate catalyst in aqueous solution has also been used successfully.

As shown in Figure 4-16, the reactor effluent is sent to a decant tank. A three-phase mixture of gas, organic liquid, and aqueous liquid usually exists in this vessel. The gas

FIGURE 4-16
BENZOIC ACID AND BENZALDEHYDE

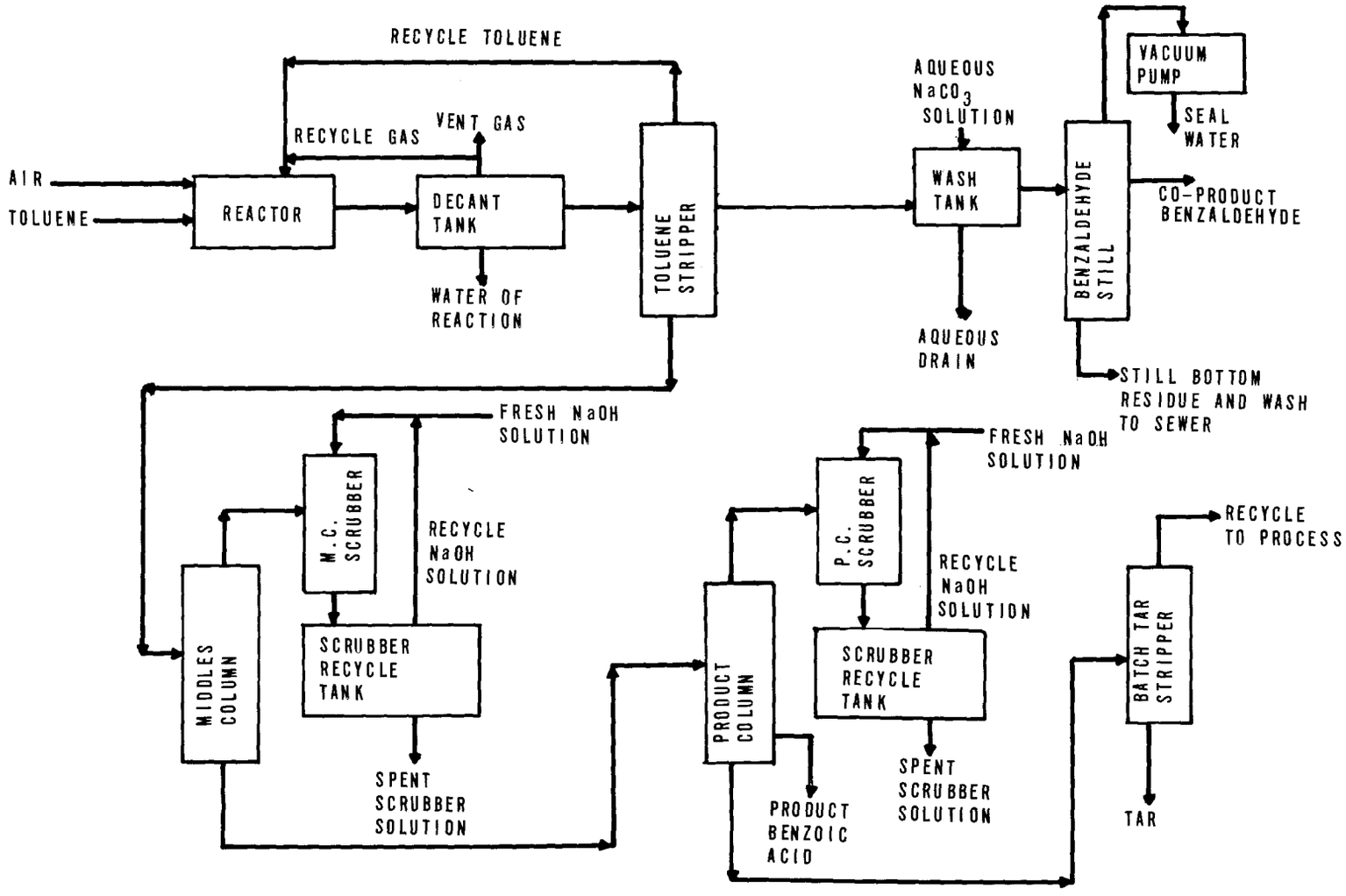

(mainly inert nitrogen) is vented under pressure control, with a portion recycled to the reactor to maintain proper dilution. The aqueous liquid phase (containing water of reaction) is decanted off using an interfacial level controller. The aqueous layer is discharged to waste treatment.

The organic layer is sent to the toluene stripper, where toluene is taken overhead and recycled to the reactor, which normally operates at 30-35% toluene conversion per pass. The bottoms from the main stripper are crude benzoic acid and by-products such as maleic anhydride, anthraquinone, and complex high-boiling aromatics of unknown composition. The crude acid is sent to the product (benzoic acid) purification section of the process.

A side-stream containing some benzaldehyde is washed with an aqueous solution of sodium carbonate in a wash tank. This step is necessary to neutralize organic acid by-products (and some benzoic acid) present with the benzaldehyde. The aqueous layer from the wash tank is drained and discharged. The organic layer from the wash tank is sent to the benzaldehyde still, where purified benzaldehyde is taken overhead. The benzaldehyde still operates under vacuum drawn by a vacuum pump. Seal water from the pump is continuously discharged. An organic residue, which must be removed periodically by water washing, forms in the bottom of the benzaldehyde still. This material is also discharged. The benzoic acid purification section consists of two rectifying columns and a batch tar stripper. Each of these distillation columns operates under vacuum drawn by steam jet ejectors. The steam is not condensed, but rather is discharged directly into the atmosphere. Consequently, this steam was not considered in the process RWL calculations. It be noted that the gases drawn into the jets are scrubbed; and little carryover of organic matter is anticipated.

The crude benzoic acid from the main strippers is sent to the middles column, where partially rectified benzoic acid is drawn off as bottoms. The overhead gases are drawn by vacuum through the middles column scrubber, where they are scrubbed with an aqueous caustic solution prior to discharge through the steam jets. The caustic solution is recycled by means of the scrubber recycle tank; fresh caustic is added periodically to the circulating solution, with a portion drawn off to maintain a high pH.

The bottoms from the middles column are sent to the product column, where product benzoic acid is drawn off. The

overhead vapors from the product column are scrubbed with caustic in a recirculating system similar to that used with the middles column (see Figure 4-16). Bottoms from the product column are sent to the tar stripper, where additional benzoic acid is stripped batchwise from by-product tar.

The major RWL's for this process are summarized in the following tabulation:

Waste System	Flow 1/kkg	BOD5 kg/kkg	COD kg/kkg	TOC kg/kkg
Water of Reaction	247	8.74	15.0	6.52
Aqueous Drain from Benzaldehyde Wash Tank	52.2	11.9	16.1	8.34
Benzaldehyde Still Residue	5.0	--	--	--
Vacuum Pump Seal Water	2,200	0.91	1.61	0.73
Middles Column Scrubber Blowdown	209	1.31	1.71	1.04
Product Column Scrubber Blowdown	122	2.74	5.36	2.97
TOTAL	2,840	25.6	50.8	19.6

The major source of waste loadings in the process is the aqueous drain from the benzaldehyde wash tank, where organic concentrations are greater than 100,000 mg/l. Materials present include sodium benzoate and other aromatics such as biphenyls. It is questionable whether this stream could be incinerated, because of its high alkalinity. However, some removal of organic wastes may be possible by acidification of the waste water followed by gravity separation. The organic wastes removed could then be burned.

Product: Methyl Chloride

Process: Esterification of Methanol with Hydrochloric Acid

Process RWL Subcategory: B

Chemical Reactions:

$$\underset{\text{Methanol}}{CH_3OH} + \underset{\text{Hydrochloric Acid}}{HCl} \xrightarrow{\text{Metal Catalyst}} \underset{\text{Methyl Chloride}}{CH_3Cl} + H_2O$$

Methyl chloride is used primarily as an intermediate during the production of other chemicals. Primary end-products include silicones, tetra methyl lead, and cellulose ethers. Chlorinated solvents such as carbon tetrachloride can also be manufactured using methyl chloride as a raw feedstock. Methyl chloride is also used as a catalyst solvent in the production of butyl rubber.

A process flow diagram for the production of methyl chloride by esterification of methanol with hydrochloric acid is shown in Figure 4-17.

Methanol and hydrochloric acid are heated and then combined in the presence of $ZnCl_2$ in the reactor. The crude product is discharged into a fractionator from which the catalyst stream is recycled back to the reactor. The vapor phase from the fractionator is then passed through a series of scurbbing units. Water and caustic solution are used to scrub the product vapor, which is then sent to a condenser. Finally, the product is treated with highly concentrated sulfuric acid to remove the water from the product stream.

The major pollution sources of this process are the waters discharged from various scrubbing units and the concentrated sulfuric acid stream from the drying unit. Process RWL calculated from the flow measurements and the analyses of waste water samples obtained in the survey periods are presented in the following tabulation:

FIGURE 4-17

METHYL CHLORIDE— ESTERIFICATION OF METHANOL WITH HYDROCHLORIC ACID

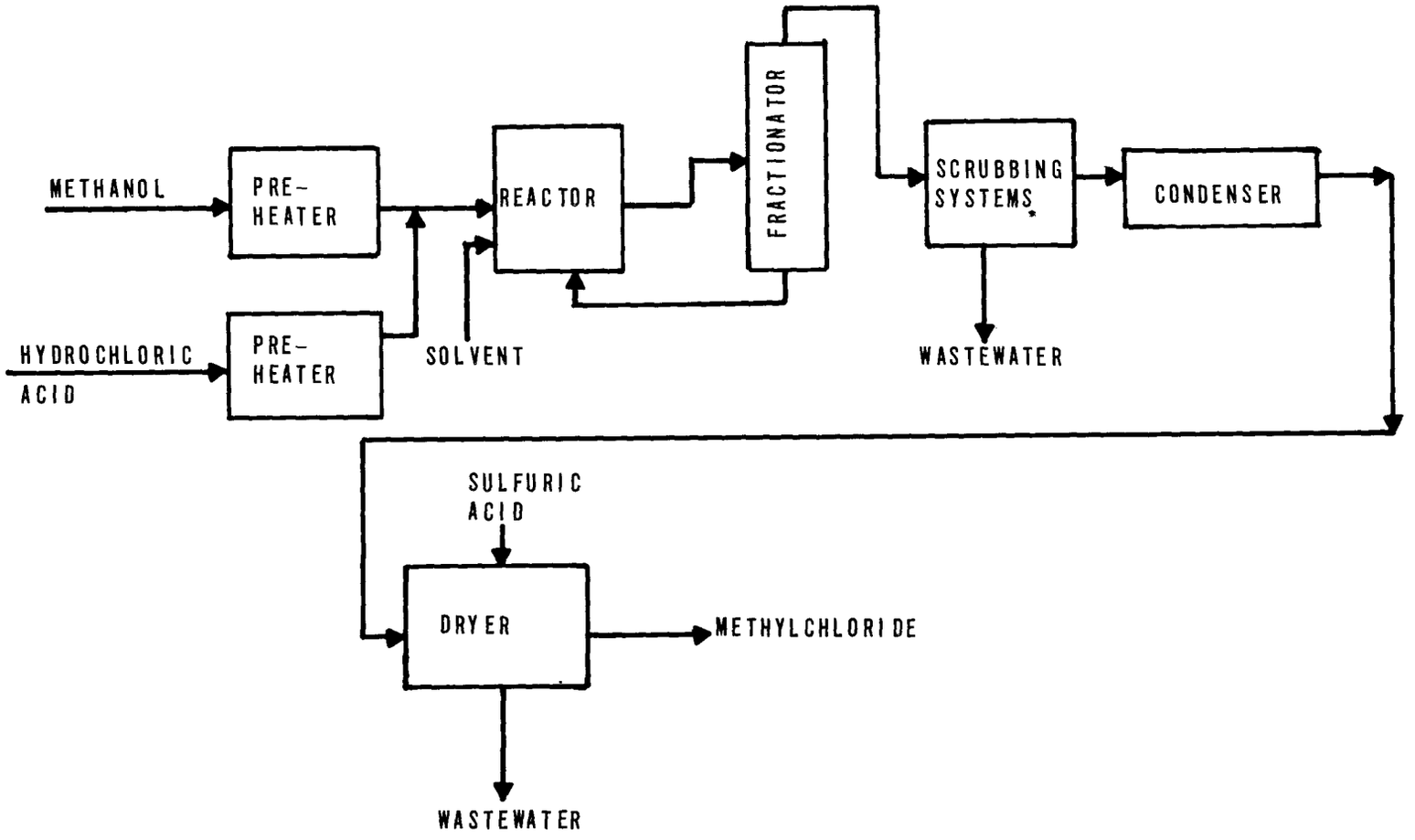

	Plant 1		Plant 2	Plant 3
	Sample Period #1	Sample Period #2	Sample Period #1	Sample Period #1
PROCESS FLOW				
liter/kkg	583	583	12,000	842
(gal/M lb)	69.9	69.9	1,430	101
BOD5 RWL				
mg/liter[1]	1,210	1,940	1,480	371
kg/kkg[2]	0.703	1.13	17.7	0.314
COD RWL				
mg/liter[1]	119,700	112,800	5,240	4,090
kg/kkg[2]	69.8	65.8	62.7	3.45
TOC RWL				
mg/liter[1]	29,000	31,600	1,070	1,080
kg/kkg[2]	16.9	18.4	12.8	0.908

[1] Raw waste concentrations are based on unit weight of pollutant per unit volume of process waste waters.
[2] Raw waste loadings are based on unit weight of pollutant per 1000 unit weights of product.

In the foregoing examples, considerable differences in flow are evident. This may be explained partially by the fact that Plants 1 and 2 utilize scrubbers for removal of hydrochloric acid while Plant 3 employs a freezing step. Waste waters common to both installations include pump leakages and washdowns.

The analytical results also indicate that, in addition to the parameters shown in the tabulation, water pollution parameters such as pH, sulfate, chloride, and zinc may be at levels potentially hazardous to biological treatment processes. The low BOD 5 values shown in the tabulation for Plant 3 may be the result of biological inhibition. The differences in pollutant loadings among three facilities visited in the survey period are attributed to differences in operating efficiencies in the scrubbing and drying units. Plant 1 data was selected for BPCTCA RWL. The median values for Plant 1 are 0.92 kg/kkg BOD5, 68 kg/kkg COD and 18 kg/kkg TOC.

An alternative method for producing methyl chloride is by direct chlorination of methane. Despite the ample availability of cheaper methane, approximately 65% of all methyl chloride is produced in the U.S. is produced from methanol. Part of the reason lies in the economics of chlorine utilization.

Product: Maleic Anhydride

Process: Oxidation of Benzene

Process RWL Subcategory: B

Chemical Reactions:

$$C_6H_6 + 4\tfrac{1}{2}\ O_2 \xrightarrow{V_2O_5} (CH)_2\text{-}(CO)_2\text{-}O + 2\ CO_2 + H_2O$$

Benzene — Maleic Anhydride

The market for maleic anhydride is currently growing at a rate of about 15 percent per year after having remained static for several years; the growing use of polyester resins is the main reason for this rapid increase in demand. Additional uses of maleic anhydride include pesticides, surface coatings, plasticizers, and lubricants. Also, maleic anhydride is used as a raw material for the production of fumeric and maleic acid. Fumeric acid finds wide use as a food acidulant; additional applications of fumeric acid resemble those of maleic anhydride. Maleic acid is used solely as a food acidulant.

Essentially all maleic anhydride in the U.S. is based on the oxidation of benzene. A process flow diagram of this oxidation process is shown in Figure 4-18. As shown in the process flow diagram, the production of maleic anhydride is achieved by a process consisting of:

1. A reaction section, where benzene is oxidized with air to form maleic anhydride.

2. A recovery section, in which maleic anhydride is separated from noncondensibles.

3. A dehydration section, in which maleic acid is dehydrated to maleic anhydride.

4. A fractionation section, in which pure maleic anhydride is produced.

Benzene is vaporized and fed to a fixed-bed reactor, to which compressed air is also fed. Typical operating

FIGURE 4-18
MALEIC ANHYDRIDE-OXIDATION OF BENZENE

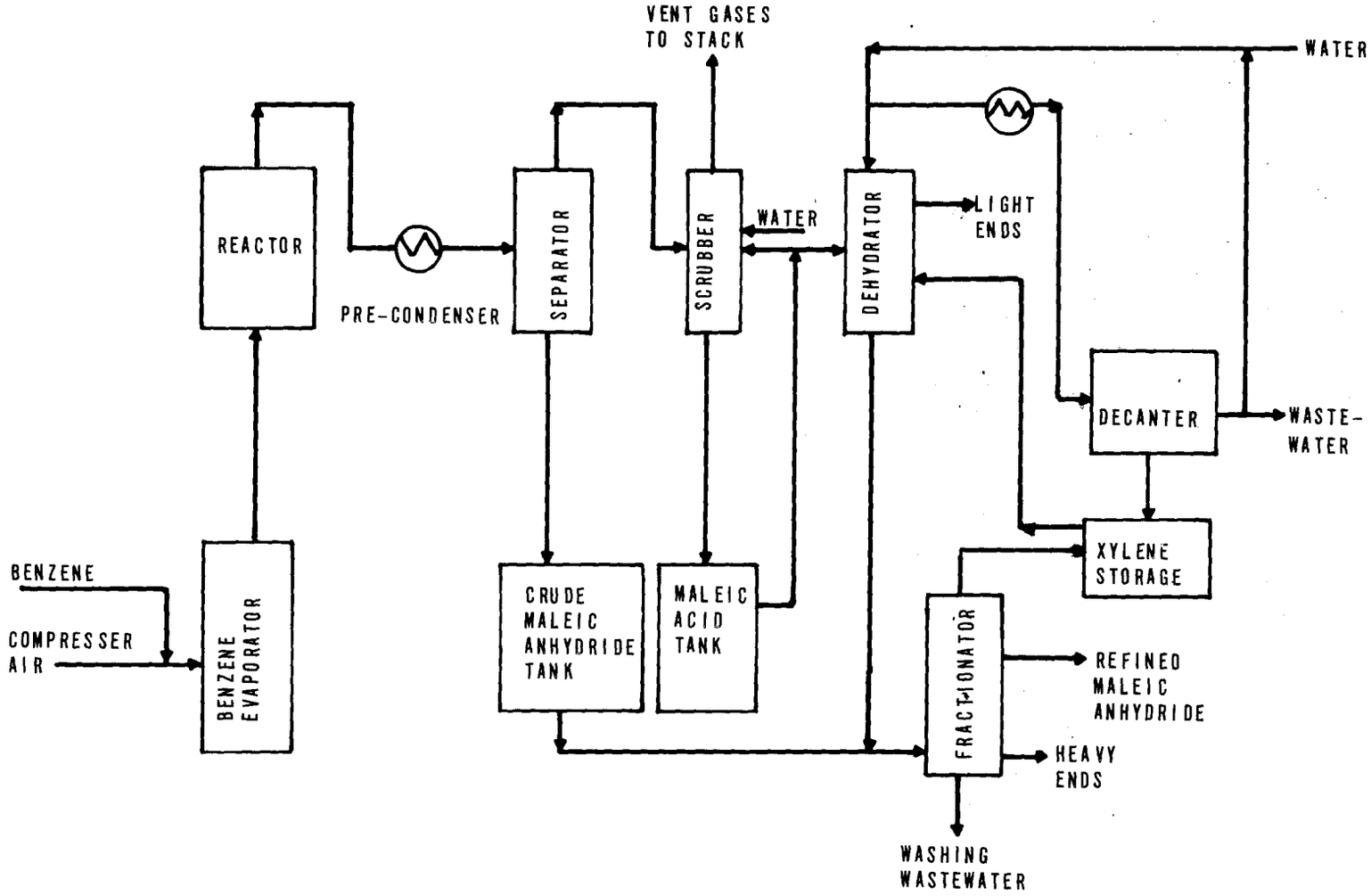

conditions are 25 psig and 400°C. Conversion of benzene is essentially complete on a once-through basis. Temperature control is achieved by circulation of a heat-transfer salt through the shell side of the reactor, with indirect steam generation. Vanadium pentoxide is used as the catalyst.

Reactor off-gas is cooled in a precondenser to condense as much of the maleic anhydride as possible from the vapor. Condensed maleic anhydride is piped to crude storage tanks prior to fractionation. The remainder of maleic anhydride is recovered by scrubbing with water, forming maleic acid. The acid is then dehydrated, thus forming maleic anhydride. Xylene is added to the dehydrator to form an azeotropic mixture, thus facilitating dehydration. The xylene is recovered from the excess water by decantation.

The recovered maleic anhydride in the separator and dehydrator is fed to a fractionator, where pure maleic anhydride is produced. The light and heavy ends are withdrawn from the dehydration and fractionation columns respectively, and are disposed of by incineration.

The major water pollution sources of this process are the excess water withdrawn from the decanter and the periodic washings from the dehydrator, fractionator, and storage tanks. Process RWL calculated from the flow measurements and analyses of waste water samples obtained in the survey periods are presented in the following tabulation:

	Plant 1	Plant 2
PROCESS FLOW		
liter/kkg	6,600	2,300
(gal/M lb)	788	274
BOD_5 RWL		
mg/liter[1]	63,500	47,000
kg/kkg[2]	418	108
COD RWL		
mg/liter[1]	90,000	126,000
kg/kkg[2]	592	287
TOC RWL		
mg/liter[1]	23,500	52,500
kg/kkg[2]	155	120

[1] Raw waste concentrations are based on unit weight of pollutant per unit volume of process waste waters.

[2] Raw waste loadings are based on unit weight of pollutant per 1000 unit weight of product.

Based on the previous process description, the flow and raw waste loadings for Plant 1 appear extremely high. This may be partially explained by the fact that waste waters from the dehydrator are presently discharged rather than recycled to the scrubber. This flow is approximately 2/3 of the total flow. These waste waters contain high concentrations of fumeric acid, thus contributing to a high BOD, COD, and TOC. It is anticipated that this stream will be recycled in the near future. At the Plant 2 facility, the dehydrator water is recycled, and both the flow and pollutant level are lower than that of Plant 1. The RWL from Plant 2 was considered as BPCTCA because of the waste reduction accomplished through in-process controls.

Waste water from Plant 1 is combined with other process wastes from the facility and is treated by the activated sludge process. The waste water is fed to the biological system at a slow, controlled rate because of its high concentrations. The waste water from Plant 2 is currently hauled away by a contract disposal service.

Product: Acetic Esters (Ethyl Acetate, Propyl Acetate)

Process: Esterification of Alcohol with Acetic Acid and Catalyzed by Aqueous Sulfuric Acid

Process RWL Subcategory: C

Chemical Reactions:

$$\underset{\text{alcohol}}{ROH} + \underset{\text{acetic acid}}{CH_3COOH} \xrightarrow{H_2SO_4} \underset{\text{acetic ester}}{CH_3COOR} + H_2O$$

where

R is Ethyl (CH_3CH_2-),
Propyl $(CH_3CH_2CH_2-)$,
or Butyl $(CH_3CH_2CH_2CH_2-)$

Typical Material Requirements:

Basis	1000 kg Ethyl Acetate	1000 kg Butyl Acetate
Ethyl Alcohol (95%)	620 kg	--
Butyl Alcohol	--	713 kg
Acetic Acid (100%)	688 kg	550 kg
Sulfuric Acid (66°Be')	15 to 150 kg	2,708 kg

Acetic acid esters are used mainly as solvents; the shorter the alcohol, the lower boiling the solvent. Ethyl acetate is a low-boiling solvent for lacquers, and the various propyl and butyl acetates are popular medium- boiling solvents used mainly in surface coatings. In all cases, acetic acid is esterified with ethyl, propyl, or butyl alcohol in the presence of aqueous sulfuric acid to form the respective acetate. When the reaction is carried out continuously in aqueous solution, it is considered to be in Subcategory C, while batch type processes are considered to be in Subcategory D.

The process plant visited during the field data collection program included manufacturing facilities for ethyl, propyl, and butyl acetate. The acetates were produced in a semi-continuous manner in two independent systems. Since there were only two systems, only two different acetates could be manufactured simultaneously. At the time of the visit, ethyl acetate was being produced in one system and propyl acetate in the second.

The facilities normally are operated continuously for a period of from 1 to 6 weeks. When it is desired to change production (turnaround, e.g. from ethyl acetate to butyl acetate), the reaction stills are washed. Production is then resumed. Thus, all three acetates are manufactured in two independent facilities by alternating production within each facility.

Ethyl acetate is produced by the esterification of acetic acid and ethyl alcohol in the presence of a catalyst such as sulfuric acid. A flow diagram for the process is shown in Figure 4-19. The reaction is reversible and eventually reaches an equilibrium at about a 67 percent conversion to ethyl acetate. In order to obtain high yields, the reaction must be forced to completion by removing the water formed and employing one reactant in excess. There are many modifications of the process, but all operate on the same general principle; that is, acetic acid is reacted with an excess of ethyl alcohol in the presence of catalytic amounts of sulfuric acid.

The process is carried out either batch by batch or in a continuous manner, depending on the nature of the raw materials and the size of operation. The main variable is acetic acid concentration, which may range from very dilute (about 8 percent) to concentrated (about 100 percent). Generally, 95 percent ethyl alcohol and 50 to 66° Be' sulfuric acid are used. The ratio of reactants varies according to the process used and the type of equipment available. For a batch process, the reactants may be mixed in the following proportions: 10 parts by weight of 8 percent acetic acid, 10 parts by weight of 95 percent ethyl alcohol, and 0.33 part by weight of 50 to 66°Be' sulfuric acid.

The continuous process may be used for any acid concentration, but it is particularly applicable to the utilization of dilute acetic acid, such as that obtained from ethyl alcohol by fermentation. Acetic acid, excess 95 percent ethyl alcohol, and about 1 percent of 66°Be' sulfuric acid are mixed and continuously passed through a preheater to an esterifying column. The column and other equipment are generally constructed of copper. The mixture is allowed to reflux, and a suitable amount of distillate is withdrawn from the top of the column, which is held at about 80°C.

The distillate, containing about 70 percent alcohol, 20 percent ester, and 10 percent water (the acetic acid is consumed in the esterifying column) is run to a separating

FIGURE 4-19

ETHYL ACETATE VIA ESTERIFICATION OF ACETIC ACID AND ETHANOL

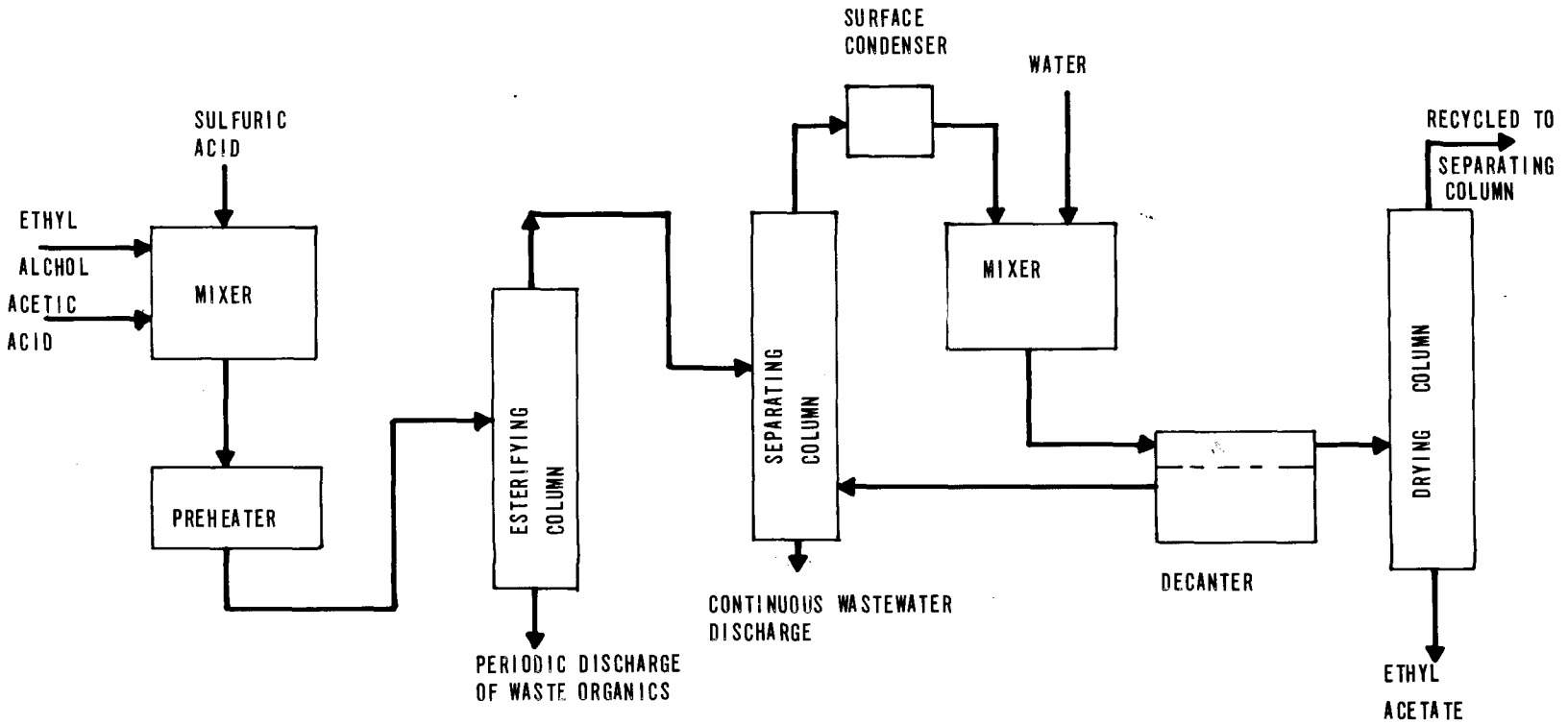

column. Here the mixture is refluxed, and a ternary azeotrope (83 percent ethyl acetate, 9 percent ethyl alcohol, and 8 percent water) is removed from the top of the separating column at approximately 70°C.

This homogeneous mixture is run to a proportional mixer, where it is blended with (approximately) an equal volume of water. The mixture is allowed to settle in a decanter, where the two layers that form are separated. The bottom aqueous layer, containing small amounts of alcohol and ester, is recycled to the lower part of the separating column, where the ester and alcohol are removed in the constant-boiling ternary mixture taken overhead. A waste water stream is continuously drawn off as bottoms from the separating column. This stream is necessary to provide a route for removal of water from the process. It includes stoichiometric water from the esterification reactions, dilution water which may be present in the feedstocks, decanter water, and condensed stripping steam used in all three distillation columns.

The top layer in the decanter contains about 93 percent ethyl acetate, 5 percent water, and 2 percent ethyl alcohol. This layer overflows to a drying column, where a sufficient amount of the ester is distilled to carry over all the water and alcohol present. This overhead material is returned to the separating column for recovery of the ester and reuse of the alcohol.

Ethyl acetate is withdrawn as bottoms from the drying column and then is either run to storage or redistilled. The latter is generally necessary to remove copper salts formed in the copper columns. Other impurities such as higher-boiling esters may also be present, depending on the purity of the raw materials. The yield of ethyl acetate is 90 to 100 percent based on acetic acid. Batch process yields are about 95 percent.

During the sampling visit, propyl acetate was being produced in a manner analogous to that described in detail for ethyl acetate. During the actual production runs, the only continuous process waste water stream from either unit was the aqueous bottoms from the separating column. Process RWL calculated from flow measurements and the analysis of these streams are indicated in the following tabulation:

	Ethyl Acetate	Propyl Acetate
PROCESS FLOW liter/kkg	1,290	1,190

gal/M lb	155	142
BOD5 RWL		
mg/liter[1]	38	7
kg/kkg[2]	0.049	0.008
COD RWL		
mg/liter[1]	79	10
kg/kkg[2]	0.102	0.012
TOC RWL		
mg/liter[1]	26	4
kg/kkg[2]	0.034	0.005

[1] Raw waste concentrations are based on unit weight of pollutant per unit volume of process waste waters.
[2] Raw waste loadings are based on unit weight of pollutant per 1000 unit weights of product.

Based on the previous process description, the raw waste concentrations and subsequent loadings appear reasonable low for Subcategory C processes. This may be partially explained by the fact that each of the three distillation columns in the process utilizes direct steam sparging to volatilize organic materials and drive them overhead.

Although the recycle of decanter water and overheads from the drying column for recovery of unreacted alcohol and product esters is considered good operating practice, it is questionable whether such low organics concentrations in the separating column bottoms can be maintained on a steady-state basis. It should be also noted that both the ethyl and propyl units were operating respectively at 87.5% and 90.5% of original design capacity. Under such conditions, each unit may be able to provide sufficient hold-up so that a bottoms stream which is relatively free of organics may be withdrawn for limited periods of time.

There are also noncontinuous waste streams associated with process turnarounds when production shifts from one ester to another. Organic residues from the esterifying column may amount to approximately 3 kg/kkg of ester product on a cumulative basis. These organic residues contain no appreciable water and are burned in an incinerator.

In addition, the esterifying columns are normally washed with a detergent or cleaning agent during production turnarounds. This waste water is highly concentrated in organics and amounts to an additional 3 liter/kkg of esters on a cumulative basis.

Although it is clear that these concentrated organic streams would add to the process RWL, it is not possible to specify quantitative values for pollution parameters such as BOD_5, COD, etc. The RWL values shown were used in the development of effluent limitations for ethyl and propyl acetate.

Noncontact waste waters include cooling water flows. Cooling water is circulated throughout the reaction, refining, and stripping stills. A loop system is employed. Make-up water for the entire plant is approximately 78,000 liters/kkg of esters (20,000 gal/M lb). Most of this loss results from evaporation in the cooling towers. A small flow is bled from the esters units to prevent a chloride build-up. This waste water flows to the dilute stream and eventually to the waste water treatment faciliites.

Condensate from the entire plant is piped back to a condensate return system for boiler feed water. The total quantity of condensate is approximately 2,000 kg/kkg of ester. Condensate from the various processes cannot be segregated, but it is estimated that condensate from ester production is less than 1 percent of the pollution abatement systems.

Product: Propylene glycol

Process: Hydrolysis of propylene oxide

Process RWL Subcategory: C

Chemical Reactions:

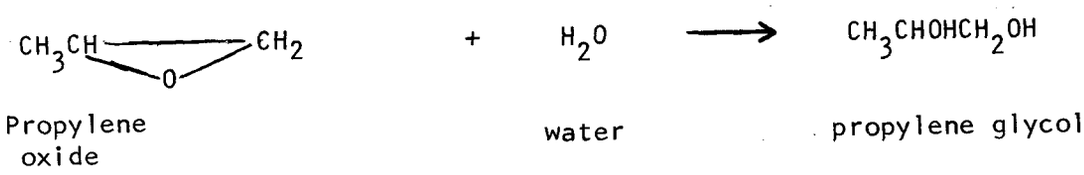

Propylene glycol is by far the most widely used difunctional alcohol for the manufacture of unsaturated polyesters. This end use consumes nearly one-half of the propylene glycol produced in the United States.

Propylene glycol is also used as a cellophane plasticizer. This market is relatively new, since propylene glycol is a substitute for ethylene glycol, which has recently been deemed toxic. Toxicity regulations also dictate the use of propylene glycol in tobacco. Miscellaneous outlets for propylene glycol include uses as a binder for cork bottle caps, as a humectant in cosmetics, and as an intermediate for propylene carbonate.

Production of propylene glycol is based on the liquid-phase hydrolysis of propylene oxide, and is shown as a flow diagram in Figure 4-20. The hydrolysis reaction occurs at elevated temperature and pressure in the presence of a sulfuric acid catalyst.

By selection of the ratio of feedstock propylene oxide to water, it is possible to control the production of the mono-, di-, and higher glycols produced. Excess water is required for temperature control and to prevent formation of undesirable by-products.

Reaction products are passed from the reactor to a series of evaporation and drying towers to remove excess water. This excess vapor is often discharged to the atmosphere, although it could be recycled to the reactor.

After passing through the drying operation, the crude propylene glycol is sent to a series of fractionators. The first tower removes water and traces of the light ends.

FIGURE 4-20
PROPYLENE GLYCOL-HYDROLYSIS OF PROPYLENE OXIDE

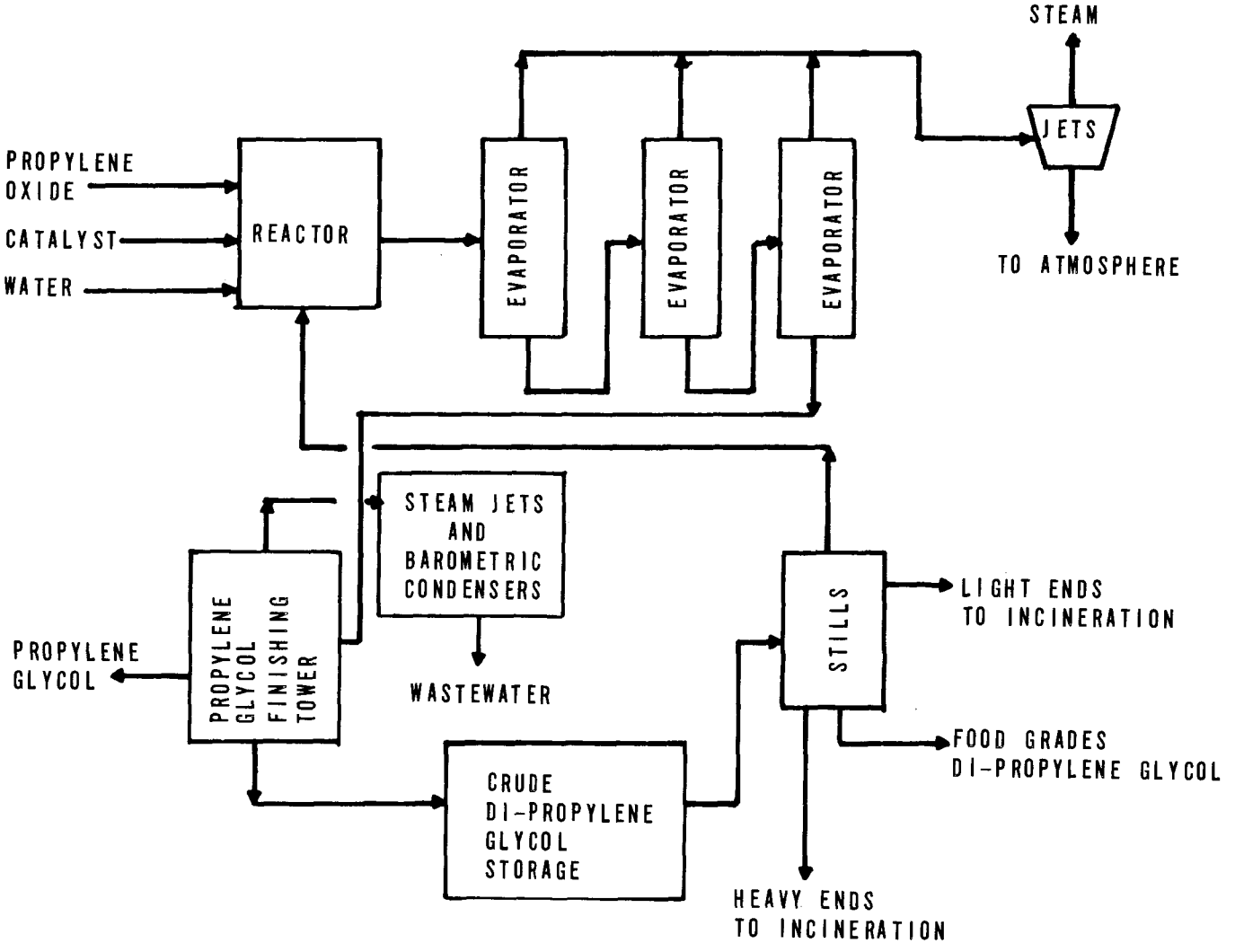

Mono-propylene glycol is then separated, condensed, and stored as an industrial grade product. The bottoms from the mono-propylene glycol tower are sent to the crude di-propylene glycol storage facilities.

Crude di-propylene glycol is then vacuum-distilled. The tops are recycled to the reactor hydrolyzer to dry the materials further and to recover glycol product. Bottoms leaving this first column are further distilled. Food-grade di-propylene glycol is obtained as bottoms from the second distillation step. The tops are then further distilled to separate additional mono-propylene glycol. Both light and heavy ends are waste products.

Waste waters from the production of propylene glycol are generated during the evaporation-drying operation and the distillation processes. Steam ejectors and barometric condensers are employed in most of the distillation columns. During the plant visit, samples of these contact process waste waters were obtained. Process raw waste loads calculated from flow measurements and analyses of these streams are indicated in the tabulation below:

PROCESS FLOW		
	liter/kkg	5,500
	gal/M lb	660
BOD_5	RWL	
	mg/liter[1]	3
	kg/kkg[2]	.016
COD	RWL	
	mg/liter[1]	10
	kg/kkg[2]	.055
TOC	RWL	
	mg/liter[1]	1
	kg/kkg[2]	.006

[1]Raw waste concentrations are based on unit weight of pollutant per unit volume of process waste waters.

[2]Raw waste loadings are based on unit weight of pollutant per 1000 unit weights of product.

These RWL values were used as the basis for BPCTCA.

Product: Caprolactam

Process: DSM Caprolactam Process

Process RWL Subcategory: C

Caprolactam is manufactured by a second process referred to as the Dutch States Mines (DSM) process which differs from the UBE Inventa process which was covered in Phase I. A schematic flow diagram for this process is shown in Figure 4-21. Cyclohexanone is prepared in two stages: 1) oxidation of cyclohexane to cyclohexanol; 2) catalytic dehydrogenation of cyclohexanol to cyclohexanone.

Cyclohexane is first oxidized with air in the presence of a cobalt catalyst. The major oxidation product is cyclohexanol, with some cyclohexanone produced as a co-product. Oxidation by-products such as acetic acid, adipic acid, and cyclohexanol esters are also formed.

Off gases from the oxidizers are scrubbed with kerosene prior to venting. Unreacted cyclohexane is subsequently recovered for recycle in a stripper. The process operates at a cyclohexane single pass conversion of less than 10 percent, so that recovery of unreacted cyclohexane is an important part of the process.

The liquid effluent from the reactor is sent to a decanter where the aqueous phase is removed as waste water. The organic phase is combined with the cyclohexane stripper overhead.

This mixture is then combined with aqueous saponified liquor (containing free caustic) and sent to a neutralization tank. The effluent from this tank is decanted. A heavy layer containing saponified acids, and esters are drawn off and sold. This stream is similar in nature to the combined acid water and caustic water from the Inventa process. Its only value is for recovery of dibasic acids such as adipic acid. This can be done by lowering the pH and extracting the organic acids with a solvent such as methanol.

The light layer from the decanter is sent to the cyclohexane recovery column. The column overhead is condensed and separated into aqueous and organic layers. The organic layer is cyclohexane, which is recycled to the reactor; the aqueous layer is discharged.

FIGURE 4-21

CAPROLACTAM-DUTCH STATE MINES CAPROLACTAM PROCESS

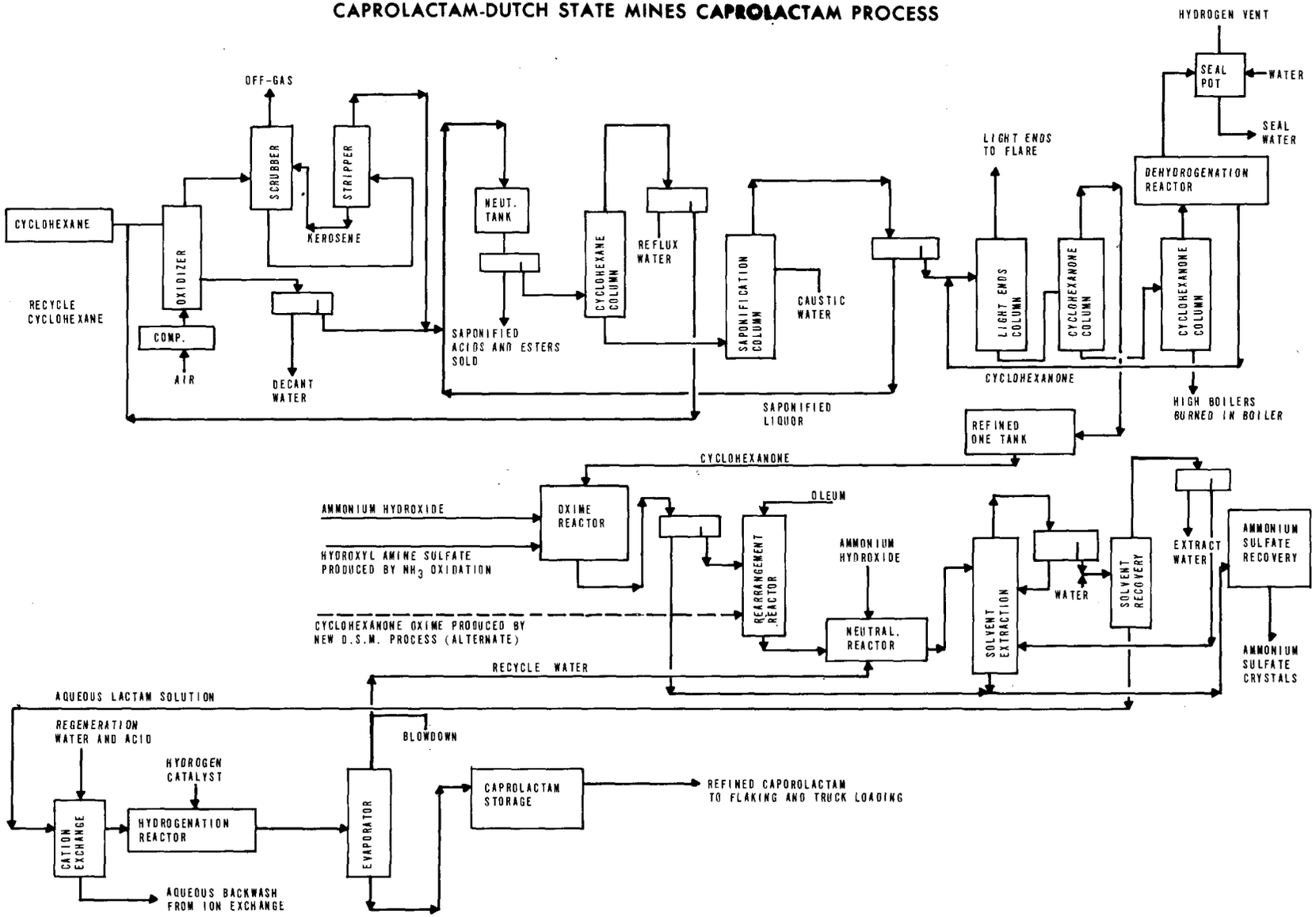

The bottoms from the cyclohexane column are sent to the saponification column, where an excess of caustic and water are needed. The effluent from the saponification column is decanted into heavy saponified liquor, which is sent back and mixed with the reactor effluent, and a light organic layer. The light layer is sent to a series of distillation columns, which remove light ends, cyclohexane, and cylcohexanol respectively. The cyclohexanol is sent to a catalytic dehydrogenation reactor to produce cyclohexanone. The reactor effluent is sent back to the light-ends column.

The overhead from the light-ends column is burned in a flare. Hydrogen from the dehydrogenation reactor is passed through a seal pot containing water and is vented. Water from the seal pot is discharged to the sewer.

Refined cyclohexanone is combined with ammonium hydroxide and hydroxylamine sulfate in the oxime reactor to produce cyclohexanone oxime. The hydroxylamine sulfate is produced by ammonia oxidation similar to the Inventa process.

It is noted that DSM has also developed an alternative process to produce cyclohexanone oxime which minimizes the amount of by-product ammonium sulfate. This process utilizes hydroxylamine phosphate oxime (HPO) and produces an amine which may be fed directly to the rearrangement reactor. The process has been integrated into the total manufacturing scheme so that the rearrangement reaction can utilize oxime feed from either the conventional oxime reactor or HPO.

Excess sulfuric acid in the effluent from the rearrangement reactor is neutralized with ammonium hydroxide in the neutralization reactor. The reaction mixture is then sent to a benzene solvent reactor, in which the crude lactam is absorbed in benzene and separated from aqueous ammonium sulfate. The aqueous salt solution is combined with that from the oxime reactor and sent to a recovery plant to produce crystals for use in fertilizer.

The lactam/benzene extract is mixed with water and sent to a solvent recovery column. The overhead mixture of benzene and water is decanted, with benzene recycled to the extractor and extract water discharged.

An aqueous lactam solution is drawn off as bottoms from the solvent recovery column. The lactam is then purified by cation exchange followed by hydrogenation. The ion exchange resin beds are regenerated by backwashing with water and acid. The backwash waste water is discharged.

The purified lactam is dried in a vacuum evaporator, with the water recycled to the neutralization reactor. Product caprolactam is withdrawn from the bottom of the evaporator.

Process RWL's for the DSM caprolactam process are presented and discussed at the conclusion of the following section, which describes the DSM process for manufacturing cyclohexanone oxime.

Product: Cyclohexanone Oxime

Process: DSM Cyclohexanone Oxime Process

Process RWL Subcategory: C

Dutch States Mines has developed a new process for manufacturing cyclohexanone oxime without by-product ammonium sulfate. This process has been integrated into the overall caprolactam production scheme to provide cyclohexanone oxime feed directly to the rearrangement reactor as shown by the dashed line in Figure 4-21.

The basic chemistry for the new process is shown in the reactions listed below:

1. $4NH_3 + 5\,O_2 \longrightarrow 4\,NO + 6\,H_2O$
2. $2\,NO + O_2 \longrightarrow 2\,NO_2$
3. $3\,NO_2 + H_2O \longrightarrow 2\,HNO_3 + NO$
4. $NO_3^- + 2\,H^+ + 3H_2 \longrightarrow NH_3OH^+ + H_2O$
5. $NH_3OH^+ + C_6H_5O \longrightarrow C_6H_5NOH + H^+ + H_2O$
6. $H^+ + H_2PO_4^- \longrightarrow H_3PO_4$

A simplified flow sheet for the process is shown in Figure 4-22. The first processing step is the oxidation of ammonia with air to nitrogen dioxide (equations 1 and 2). The gases from the oxidizer are then absorbed in a recirculated aqueous process solution in the nitrogen gas absorber. Nitrogen is vented as off-gas from the absorber.

The liquid effluent from the absorber is a buffered aqueous solution of nitric acid (equation 3), phosphoric acid, and ammonium nitrate. This mixture is passed to the HPO reactor, where hydroxylamine is produced (equation 4).

The HPO reactor is a column sparged with compressed hydrogen gas. Unused hydrogen gas is separated from the catalyst suspension (palladium metal on carbon), and recycled by means of a compressor.

The aqueous hydroxylamine solution from the HPO reactor is sent to a series of stirred tank oximation reactors, where it countercurrently contacts cyclohexanone in the presence

FIGURE 4-22

CYCLOHEXANONE OXIME-DUTCH STATE MINES CYCLOHEXANONE OXIME PROCESS

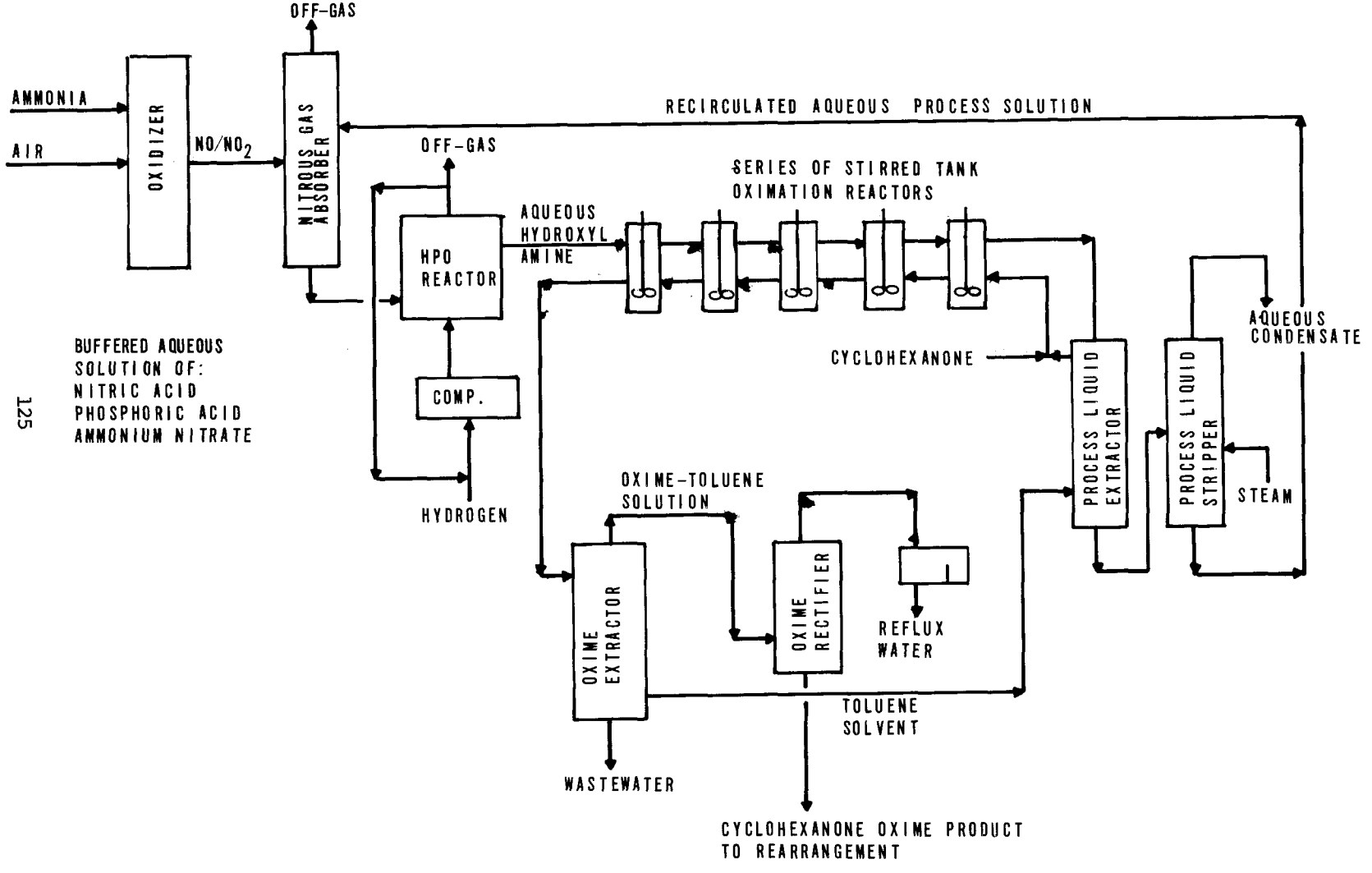

of toluene. Cyclohexanone oxime is produced as shown in equation 5. Hydrogen ions liberated by the oximation reaction are accepted by the phosphoric acid buffer system (phosphate ions in equation 6). The oximation occurs at a pH of 1 to 2. Due to the countercurrent flow, nearly quantitative conversion of cyclohexanone is obtained.

Product cyclohexanone oxime is drawn from the oximation cascade (lefthand side of Figure 4-22), as a mixture of oxime, water, and toluene. This product mixture is contacted with additional toluene in the oxime extractor. The aqueous bottoms from the oxime extractor is drawn off as waste water.

The oxime-toluene solution from the oxime extractor is sent to the oxime rectifier, where refined cyclohexanone oxime product is drawn off as bottoms. This material can be used directly in the rearrangement reaction to produce caprolactam.

The overhead from the oxime rectifier is sent to a decanter, where reflux water is drawn off. The separated toluene layer is split, and part is recycled to the oxime extractor; the remainder is sent to the process liquid extractor.

In this extractor, the toluene contacts aqueous process liquid leaving the oximation cascade (right hand side of Figure 4-22). The organic phase from the extractor is mixed with fresh cyclohexanone and sent to the oximation reactors. The process liquid leaving the oximation section must be purified thoroughly to protect the catalyst in the hydroxylamine reactor. To achieve this, the liquid is extracted with toluene and subsequently stripped with steam in the process liquid stripper. Passage through the stripping column also removes water formed during the preparation of hydroxylamine and oxime (equations 4 and 5).

The aqueous process solution is then recirculated to the nitrous gas absorber. Hydrogen and nitrate ions are restored in the process liquid by production of nitric acid (equation 3).

Calculated process RWL's for Oxanone, Caprolactam, and HPO Sections of the DSM plant are shown on Tables 4-1 and 4-2. The data shown here have also been combined to provide a total RWL for the integrated DSM caprolactam process (bottom of Table 4-2).

Examination of the data indicates that the backwash from the cation exchange resin beds in the Caprolactam Section of the

DSM process is a major waste source not found with the Inventa process. The DSM route uses chemical treatment by ion exchange and hydrogenation to purify the product lactam, while the Inventa process uses an extensive vacuum distillation train for purification. It is not clear as to whether the physical purification used with the Inventa process could be substituted for the chemical method used by DSM. The impurities to be removed may be significantly different.

The new HPO process incorporated in the DSM scheme also produces a significantly higher RWL than the hydroxylamine section of the Inventa process. However, this must be evaluated considering the fact that by-product ammonium sulfate formation is minimized.

The DSM waste loads shown in Tables 4-1 and 4-2 are the basis for BPCTCA for this process.

Table 4-1

Process Raw Waste Load Based on DSM Process

Oxanone Section	RWL Based on Cyclohexanone	
	Flow (liters/kkg)	COD (kg/kkg)
Saponified Acids & Esters	Sold for Product Recovery	
Light Ends Column Overhead Cyclohexanol Col. Btms.	Burned in Flare or Steam Boilers	
Decant Water from Oxidation Reactor	358	5.37
Reflux Water from Cyclohexane Column	478	8.35
Hydrogen Seal Water	239	6.78
Flare Condensables	No Data Available	
Total (Based on Wastewater to Sewer)	1075	20.5

Caprolactam Section	RWL Based on Caprolactam	
	Flow (liters/kkg)	COD (kg/kkg)
Extraction Wastewater	394	0.39
Backwash from Cation Exchange Resin Beds	1,730	37.1
Blowdown from Recycle Process Water	No Data Available	
Total (Based on Wastewater to Sewer)	2,120	37.5

Table 4-2

Process Raw Waste Load Based on DSM Process

Hyam Phosphate Oxime (HPO) Section	RWL Based on Cyclohexanone Oxime	
	Flow (liters/kkg)	COD (kg/kkg)
Aqueous Reflux from Cyclohexanone Oxime Rectifier	25.5	0.011
Stripper Overhead Condensate	1146	3.43
Wastewater from Oxime Extractor	509	1.02
Miscellaneous Run-off	229	1.83
Total (Based on Waste Water to Sewer)	1910	6.29

Average Raw Waste Load for Total Plant
Based on Finished Caprolactam Product

Plant Section	Flow (liters/kkg)	BOD (kg/kkg)	COD (kg/kkg)
Oxanone, HPO, and Caprolactam Process Wastewaters	7057	39.1	78.1
Hydrogen Seal Water, Drainage From Oxanone, HPO, and Capro.	6113	3.2	6.6
Ground Drainage Product Loading	630	0.5	0.9
Discharge from Salt Recovery Section	15,268	4.3	7.4
Total (Based on Water to Sewer)	29,100	47.1	93.0

Product: Formic Acid

Process: Hydrolysis of Formaldehyde

Process RWL Subcategory: C

Chemical Reaction:

$$2\ HCONH_2 + H_2SO_4 + 2\ H_2O \longrightarrow 2\ HCOOH + (NH_4)_2SO_4$$

formamide, sulfuric acid, formic acid, ammonium sulfate

The main use for formic acid outside the United States is as a coagulant for natural rubber latex. Domestically, over half of the total is used in place of sulfuric acid in high-temperature acid textile dyeing, and to some extent in leather tanning.

A process flow diagram for the manufacture of formic acid via hydrolysis of formaldehyde is shown in Figure 4-23.

The feed stock formaldehyde, is stoichiometrically mixed with water and concentrated sulfuric acid in a pre-mixer, where the hydrolysis reaction occurs. The mixture of reaction products is then sent to a series of vacuum stills where ammonium sulfate in the form of a solid powder is withdrawn as the still bottoms. The crude formic acid vapor taken as the overhead from the still is condensed by passage through a heat exchanger and then sent to a storage tank before being discharged into a purification still. The product formic acid is then taken as the overhead from the purification still, while the residue in the still is periodically flushed.

The major water pollution source of the process is the contact water utilized for the water eductor which is used to pull vacuum for the distillation columns. Although the residue withdrawn as the bottom of the formic acid purification still is periodically flushed into sewer lines, this stream can be disposed of through incineration and is therefore not included in the raw waste load calculation. The following represent the median values as determined from the sampling program:

FIGURE 4-23

FORMIC ACID-HYDROLYSIS OF FORMAMIDE

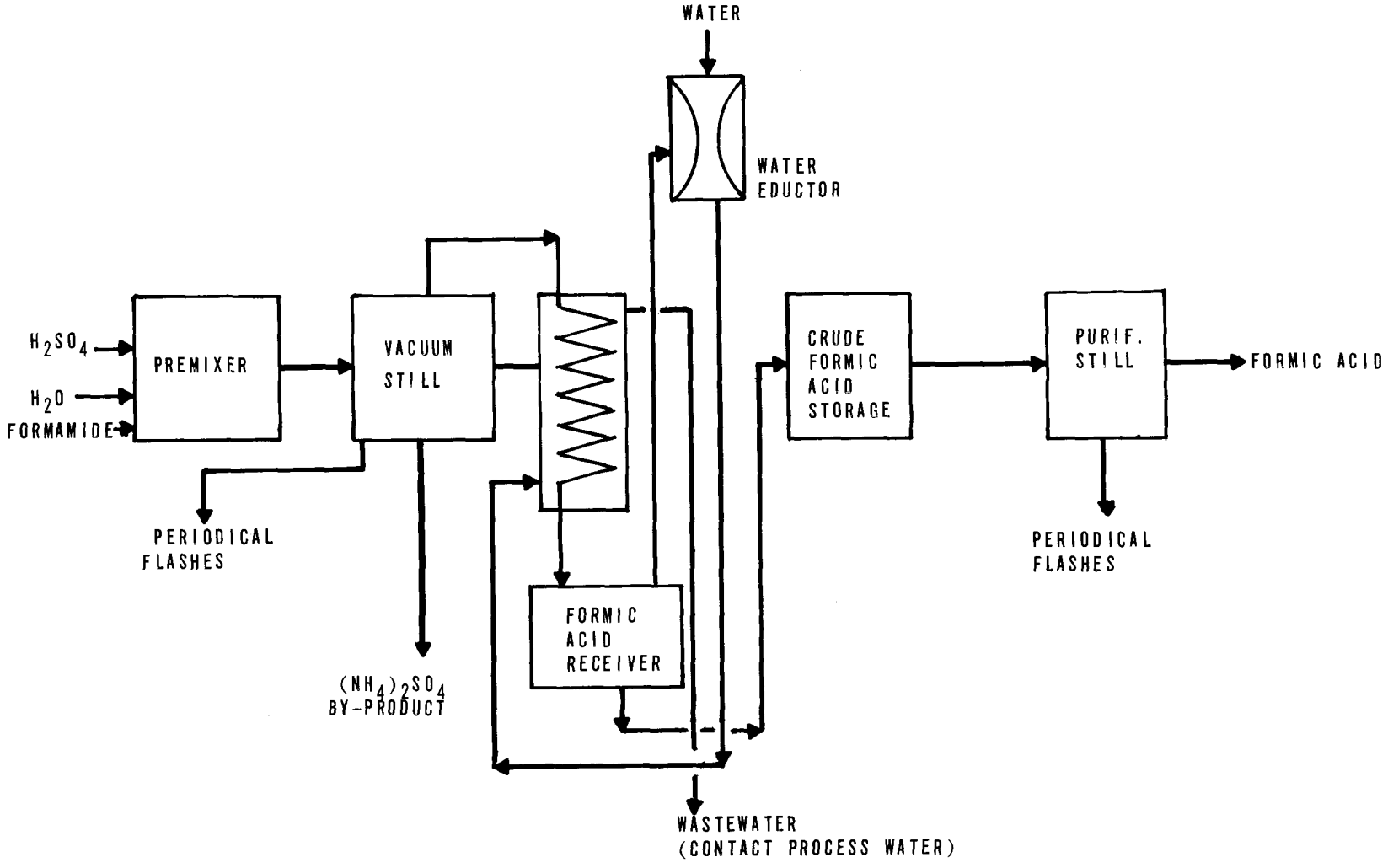

PROCESS FLOW

liter/kkg	135,000
gal/M lb.	16,000

BOD5 RWL

mg/liter[1]	7.8
kg/kkg[2]	1.05

COD RWL

mg/liter[1]	33
kg/kkg[2]	4.5

TOC RWL

mg/liter[1]	10
kg/kkg[2]	1.4

[1]Raw waste concentrations are based on unit weight of pollutant per unit volume of process waste waters. [2]Raw waste loadings are based on unit weight of pollutant per one thousand unit weight of product.

The high flows and low concentrations shown are from the water eductor used in the process. It should be noted that the ammonium sulfate byproduct is not considered in the RWL calculations.

Most of the formic acid produced in the U.S. is obtained as a by-product from the manufacture of acetic acid via butane oxidation. Some of it, however, is made by absorbing CO either in caustic soda, followed by neutralization or in methanol, at high pressure, followed by conversion to formaldehyde and hydrolysis.

Product: Isopropanol

Process: Continuous hydrolysis of propylene

Process RWL Subcategory: C

Chemical Reactions:

$$\underset{\text{propylene}}{CH_3CH = CH_2} + 75\%\ H_2SO_4 \longrightarrow \underset{\text{isopropyl hydrogen sulfate}}{CH_3\underset{\underset{HSO_4}{|}}{C}HCH_3} + H_2O \longrightarrow \underset{\text{isopropyl alcohol}}{CH_3\underset{\underset{OH}{|}}{C}HCH_3} + H_2SO_4$$

Typical Material Requirements

1000 kg Isopropanol
(87% isopropanol azeotrope)

Propylene	820 kg
75% sulfuric acid	<1.0 kg
25% caustic	6.5 kg
Benzene	<1.0 kg

Isopropanol is widely used in two major areas: feedstocks for the production of other organic chemicals, and solvents. Organic chemicals which employ isopropanol as a raw material include acetone, glycerine, isopropyl acetate, amines, and hydrogen peroxide. The largest single use for isopropanol, which accounts for nearly one-half the total production, is the manufacture of acetone by catalytic dehydrogenation.

As a solvent, isopropanol is used mainly for gums, shellac, and synthetic resins, competing on a price-performance basis with ethanol. It is also used widely as a rubbing alcohol.

The process plant visited during the sampling program was operated continuously except for occasional equipment washings. Since there is contact with aqueous waters the process belongs to Subcategory C. A flow diagram for the process is shown in Figure 4-24.

The liquid propylene feedstock (65 percent) combined with recycled hydrocarbons, is absorbed in 75 percent sulfuric acid to form a solution of diisopropyl sulfate and isopropyl acid sulfate. The reaction takes place at approximately 400 psig and 60°C. The sulfated hydrocarbon solution is converted to an acid solution of isopropyl alcohol, ether, and polymer by hydrolysis reactions with the addition of

FIGURE 4-24
ISOPROPANOL- HYDROLYSIS OF PROPYLENE

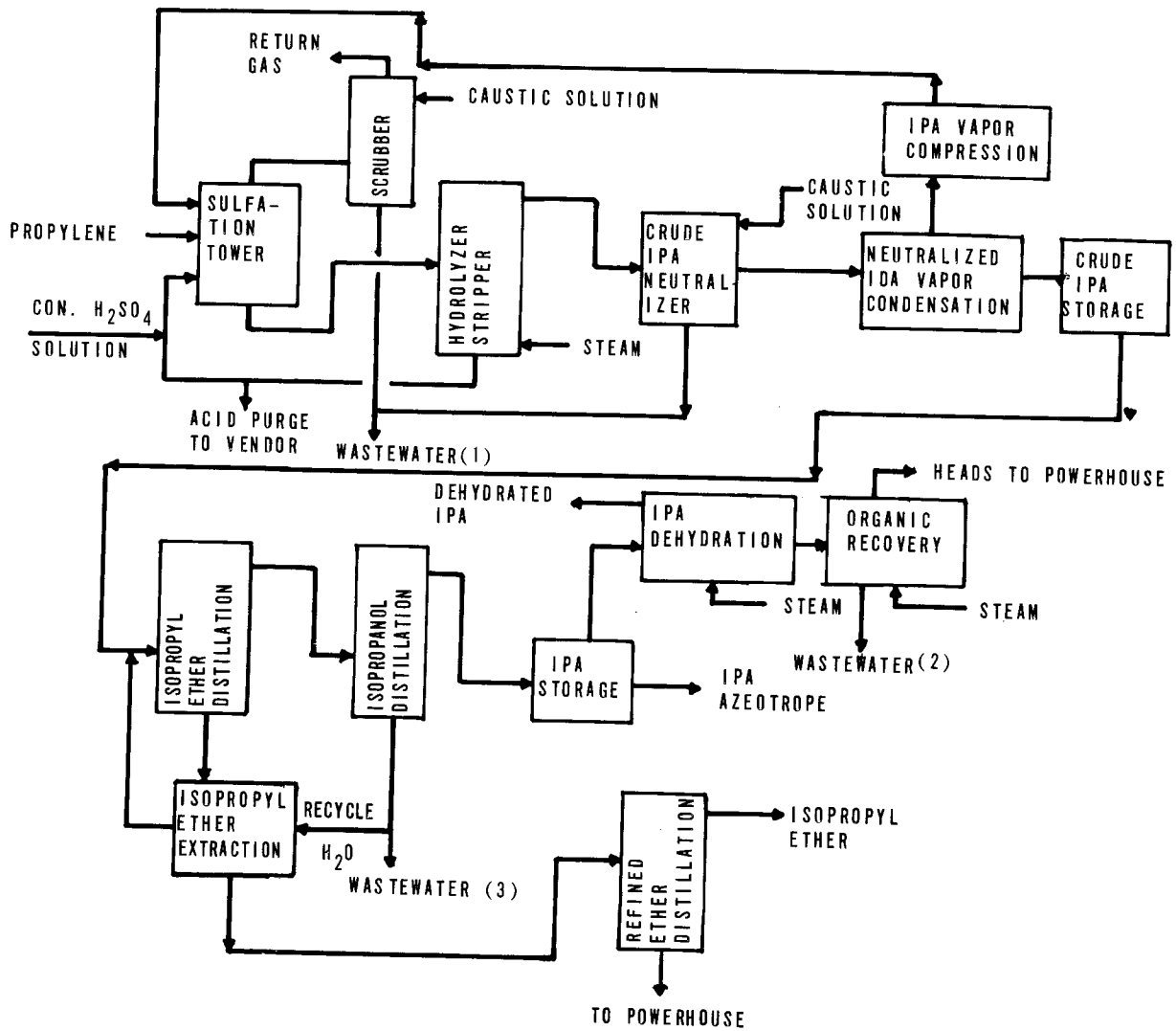

dilution water in the hydrolyzer-stripper. Hydrolyzed reaction products are steam-stripped from the acid and the vapors are condensed following neutralization with a caustic solution.

Dilute acid is returned for reconcentration. The liquid products are then charged to a distillation column, where isopropyl alcohol is separated from isopropyl ether. The ether goes overhead while remaining isopropanol is extracted with recycled water and returned to the crude storage tank. The ether is then distilled and stored for subsequent sale. If a dry isopropanol is required, the azeotropic mixture is broken with benzene.

During the sampling visit, isopropanol was being produced at the normal rated capacity; thus the waste waters are considered to be typical of the everyday operation. The major sources of waste water include the crude isopropanol waterwash scrubber, the crude isopropanol caustic scrubber, the isopropanol azeotrope distillation step, and the organic (benzene) recovery step. Process raw waste loads calculated from flow measurements and the total pollutant loadings are indicated in the tabulation below:

	Sample Period #1	Sample Period #2
PROCESS FLOW		
liter/kkg	2,537	2,537
gal/M lb	304	304
BOD_5		
mg/liter[1]	400	386
lb/M lb[2]	1.01	.979
COD		
mg/liter[1]	1,123	1,132
lb/M lb[2]	2.85	3.13
TOC		
mg/liter[1]	508	530
lb/M lb[2]	1.29	1.34

[1]Raw waste concentrations are based on unit weight of pollutant per unit volume of process waste waters.
[2]Raw waste loadings are based on unit weight of

pollutant per 1000 unit weights of product.

Waste streams included in the above calculations are continuous. However, there are occasional washings which were not sampled during the plant visit. The organic stripper is cleaned with water once per month. The cleaning procedure requires approximately 100,000 gallons of water. It is believed that this stream should not be included in the RWL calculations since it can be disposed of by incineration or combined with the process waste water stream on an intermittent basis and treated. Although it is not possible to specify quantitative values for pollution parameters such as BOD_5, COD and TOC for this stream, Therefore, the RWL presented in the above tabulation can be considered as representative of the process. Another discontinuous source of waste is the yearly cleaning of the absorption tower which yields approximately 1000 lbs of carbon tar for landfill disposal.

Noncontact waste water includes cooling water. The process uses approximately 100 kg of once-through cooling water per kg of product. The treatment of the intake cooling water consists of bar screening and chlorination. Boiler blowdown is an additional noncontact flow. The blowdown is added to the cooling water return system. Hot phosphate softening is employed to treat the boiler feedwater.

The process RWL data presented was used to define BPCTCA. The wastes from this plant are neutralized and discharged to the local municipal treatment plant.

Product: Oxalic Acid

Process: Nitric Acid Oxidation of Carbohydrates

Process RWL Subcategory: C

Chemical Reaction:

$$\underset{\text{glucose}}{C_6H_{12}O_6} + \underset{\text{nitric acid}}{6HNO_3} \longrightarrow 3HOOCCOOH + \underset{\text{nitric acid}}{6NO} + 6H_2O$$

Typical Material Requirements:

Basis: 1000 kg oxalic acid dihydrate

Glucose (60 percent)	960 kg
Nitric Acid (90 percent)	2,340 kg
Sulfuric Acid (100 percent)	52 kg

The uses for oxalic acid center around its calcium-ion removal and reducing properties. It is used as a laundry "sour", as a bleach for removing iron stains from a variety of materials, and in cleaning compounds. It also finds use in automobile radiator cleaners, leather tanning and manufacture, chemical processing, photography, medicinals, dyes, and inks.

Figure 4-25 is a process flow diagram of oxalic acid production via nitric acid oxidation of carbohydrates. Carbohydrates (in the form of corn starch), vanadium catalyst, steam, sulfuric acid, and nitric acid are added to the reactor. The reaction time is twelve hours and the reactors are sequenced so as to continuously provide products for the remainder of the processing equipment. Spent nitric acid is withdrawn from the reactor and recovered. The reaction products go to a vacuum crystallizer followed by a wringer. The liquid effluent from the wringer goes to a liquid-solid separation step, in which the solids are recycled to the crystallizer while the liquid proceeds to an evaporator. The discharge from the evaporator is recycled to the reactor. The crude oxalic acid crystals from the wringer are redissolved and then filtered. The solids from the filter are disposed by landfill while the oxalic acid is recrystallized under vacuum conditions. The crystals proceed to a second wringer and the liquid from this wringer undergoes a liquid-liquid separation step along with liquid from the previous crystallization step. Some liquid is recycled to the crystallizer, while the remaining portion

FIGURE 4-25
OXALIC ACID-NITRIC ACID OXIDATION OF CARBOHYDRATES

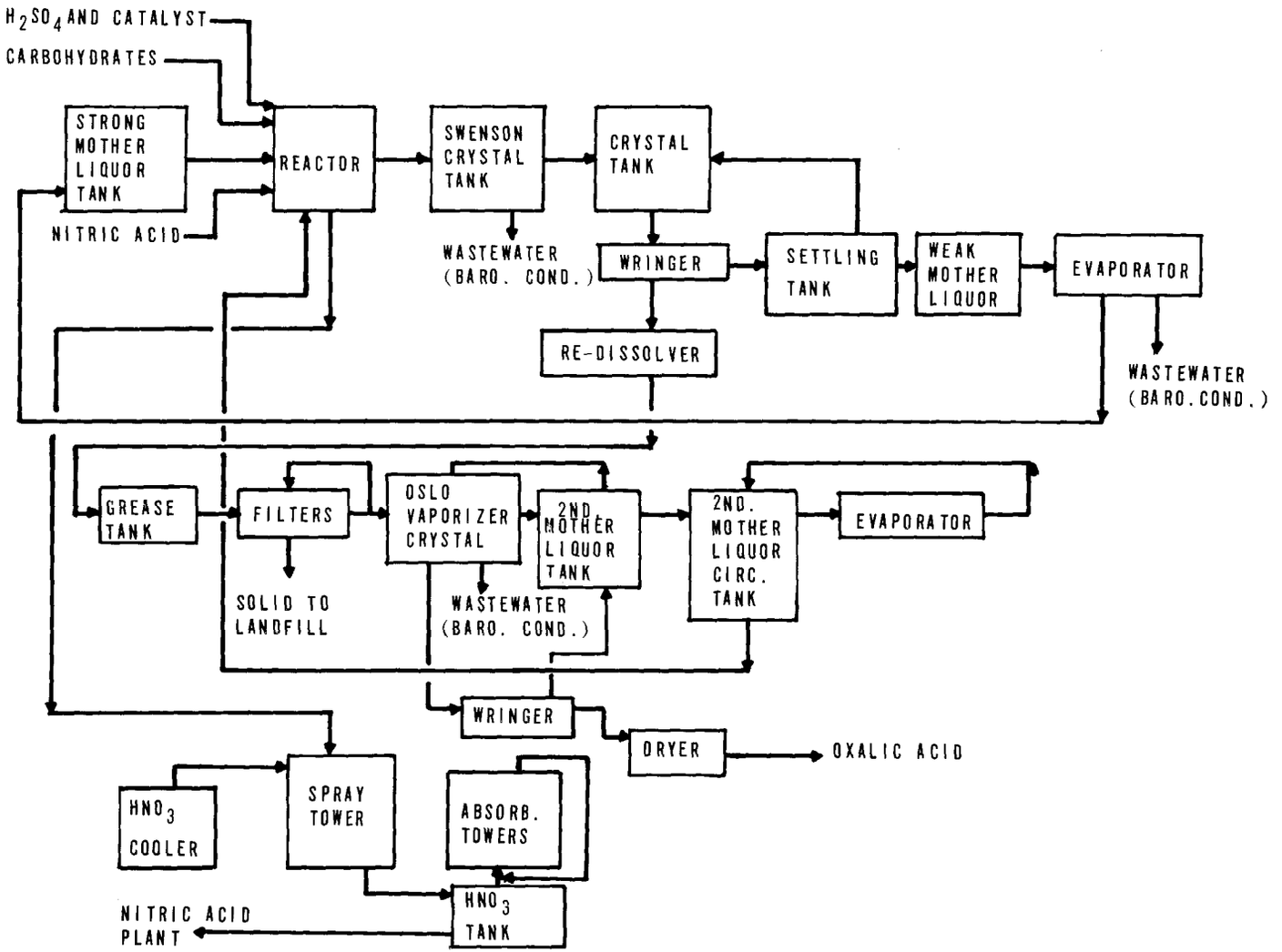

proceeds to a second liquid-liquid separation step. Some of the liquid is recycled to the reactor and the remainder goes to an evaporator. The discharge from the evaporator is recycled to the liquid-liquid separator. The oxalic acid crystals from the wringer are dried and packaged for sale.

The waste waters from this process consist exclusively of barometric condenser water. This effluent was sampled and its flow measured. The process RWL calculated from the flow measurements and the analyses of the samples are indicated in the tabulation below:

PROCESS FLOW

liter/kkg	436,000
gal/M lb	52,300

BOD5 RWL

mg/liter[1]	3
kg/kkg[2]	1.31

COD RWL

mg/liter[1]	10
kg/kkg[2]	4.36

TOC RWL

mg/liter[1]	3
kg/kkg[2]	1.31

[1]Raw waste concentrations are based on unit weight of pollutant per unit volume of process waste waters.
[2]Raw waste loadings are based on unit weight of pollutant per 1000 unit weights of product.

The high flows and low concentrations seen above are a result of the vacuum system associated with the process. These data were used to define BPCTCA. The wastes from the process are currently discharged to a municipal treatment plant.

The alternate route in the manufacture of oxalic acid is via sodium formate. Sodium formate is produced by the reaction of solid sodium hydroxide and carbon monoxide at 200°C and 150 psi in an autoclave. After the reaction is completed, the pressure is reduced and the temperature is raised to 400°C. The sodium formate is converted into sodium oxalate, which is then precipitated with calcium hydroxide to form calcium oxalate. The calcium oxalate is then acidified with sulfuric acid to form oxalic acid.

Product: Calcium Stearate

Process: Neutralization of Stearic Acid

Process RWL Subcategory: C

Chemical Reactions:

$$2\ C_{17}H_{35}COOH + 2\ NaOH + CaCl_2 \longrightarrow (C_{17}H_{35}COO)_2\ Ca + 2\ NaCl + 2\ H_2O$$

stearic acid — sodium hydroxide — calcium chloride — calcium stearate

Calcium stearate belongs to a group of water-insoluble metallic soaps. Their water insolubility differentiates them from ordinary soap, and their solubility or solvation in organic solvents accounts for their manifold uses. The precipitation process is the classical method of preparing metallic soaps, including calcium stearate. It is now used primarily in making high melting-point soaps which precipitate as light, fluffy powders and can be recovered by filtration.

Raw materials for the production of calcium stearate include stearic acid, sodium hydroxide, and calcium chloride. A flow diagram of the process is presented in Figure 4-26. The feedstocks are fed continuously into a reactor, where a two-stage precipitation process takes place. In the first reaction, an alkali soap is formed by reacting the stearic acid with caustic soda. In the second step, the alkali soap is treated with a water solution of the calcium chloride to precipitate the calcium stearate. Sodium chloride remains dissolved in the mother liquor. The resulting slurry, containing about 10 percent of calcium stearate, is continuously fed to a filtration step for solids concentration. Vacuum filters are employed, and the filter cake is subsequently washed. The partially dried filter cake is then placed in tray dryers, where the remaining water is removed. The dried soap may then be ground and separated to produce a powder of uniform particle size.

The major water pollution sources of the process are waste water discharged from the filtration step and from the "Battery-Limit" clean-up water. Multiple waste water samples were obtained during the plant visit in the survey period. Process RWL calculated from flow measurements and

FIGURE 4-26
CALCIUM STEARATE - NEUTRALIZATION OF STEARIC ACID

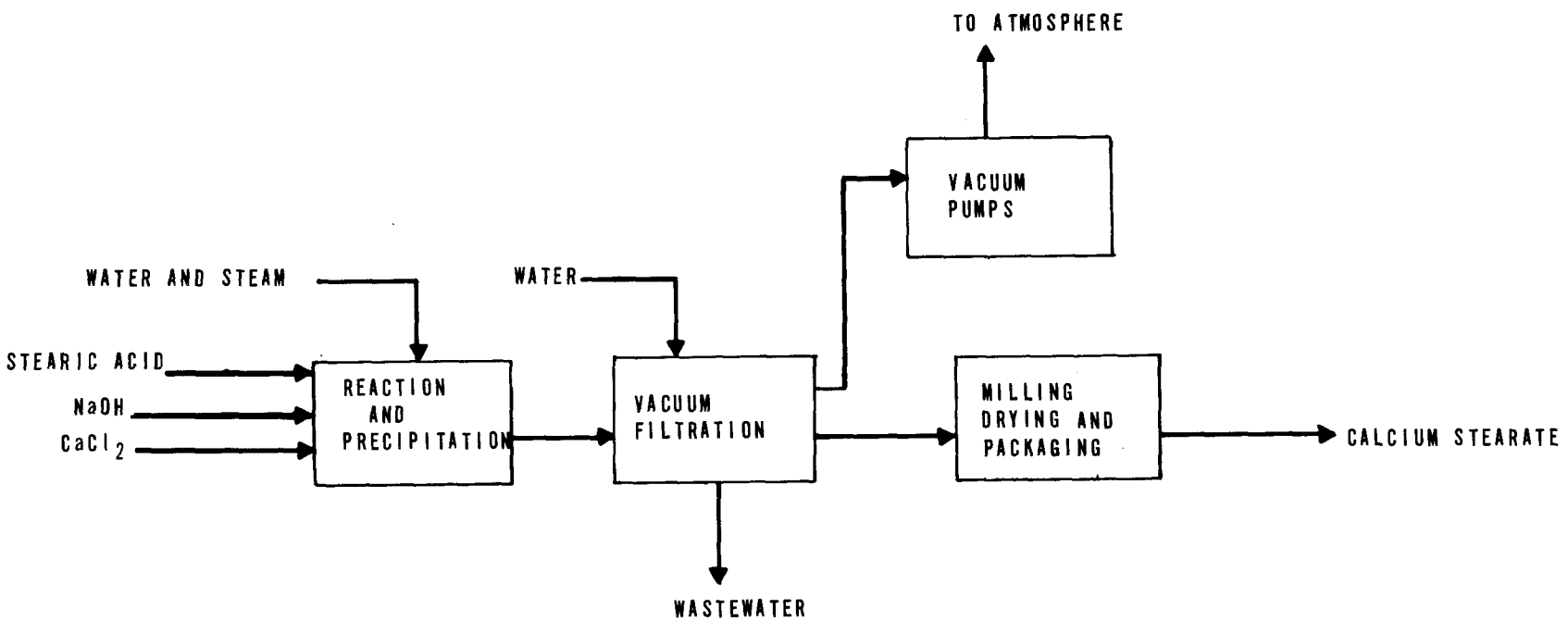

the analyses of these streams are presented in the following tabulation:

PROCESS FLOW	
liter/kkg	54,100
gal/M lb	6,460
BOD_5 RWL	
kg/kkg[1]	13.8
COD RWL	
kg/kkg[1]	32.8
TOC RWL	
kg/kkg[1]	23.1

[1] Raw waste loadings are based on unit weight of pollutant per 1,000 unit weights of product.

The high flow of the waste stream can be explained by the fact that a considerable quantity of water is utilized during the filtration step to wash the solid cake. The analytical results also indicate high concentrations of calcium and chloride in the waste streams; these are attributed to excess raw material required by the reaction and to the reaction by-product, salt.

Product: Hexamethylene Tetramine

Process: Synthesis with Ammonia and Formaldehyde

Process RWL Subcategory: C

Chemical Reactions:

$$6HCHO + 4NH_3 \rightarrow (CH_2)_6N_4 + H_2O$$

formaldehyde ammonia hexamethylene tetramine

Two manufacturing plants were surveyed during the field data collection program. Flow diagrams designated Plant 1 and Plant 2 are shown in Figures 4-27 and 4-28.

Both plants combine aqueous formaldehyde and ammonia in a liquid phase reactor to produce an aqueous solution of hexamethylene tetramine. The reaction shown above produces about 0.8 kg of water per kg of hexamethylene, and can be run with either an excess of ammonia or formaldehyde in the reaction mixture. The ammonia is used preferably in a substantially anhydrous state, in either gaseous or liquid form initially. In view of the high exothermic nature of the synthesis reaction, the desired control and stabilization of the reaction temperature is somewhat more readily achieved if the ammonia is introduced in liquid form so as to take advantage of the cooling resulting from its vaporization.

Reaction temperatures of 20°C - 75°C constitute the range specified for manufacture of hexamethylene tetramine. The reaction is conducted at essentially atmospheric pressure, although slightly superatmospheric pressures may be employed for operating convenience. The production of hexamethylene tetramine is carried out in the liquid phase in the presence of an aqueous solution of the product as a rule. No catalyst is employed in the reaction of ammonia with formaldehyde to give hexamethylene tetramine.

In both plants the liquid effluent from the reactor is concentrated in a vacuum evaporator, where water from the reactor and formaldehyde feedstock are drawn off. In Plant 1, the overhead from the evaporator is sent to a vapor-liquid separator with the liquid phase recycled to the evaporator; the water vapor from the separator is passed through a noncontact surface cooler and then sent to a second vapor-liquid separator; and condensate is drawn off

FIGURE 4-27
HEXAMETHYLENE TETRAMINE—SYNTHESIS WITH AMMONIA AND FORMALDEHYDE

PLANT 1

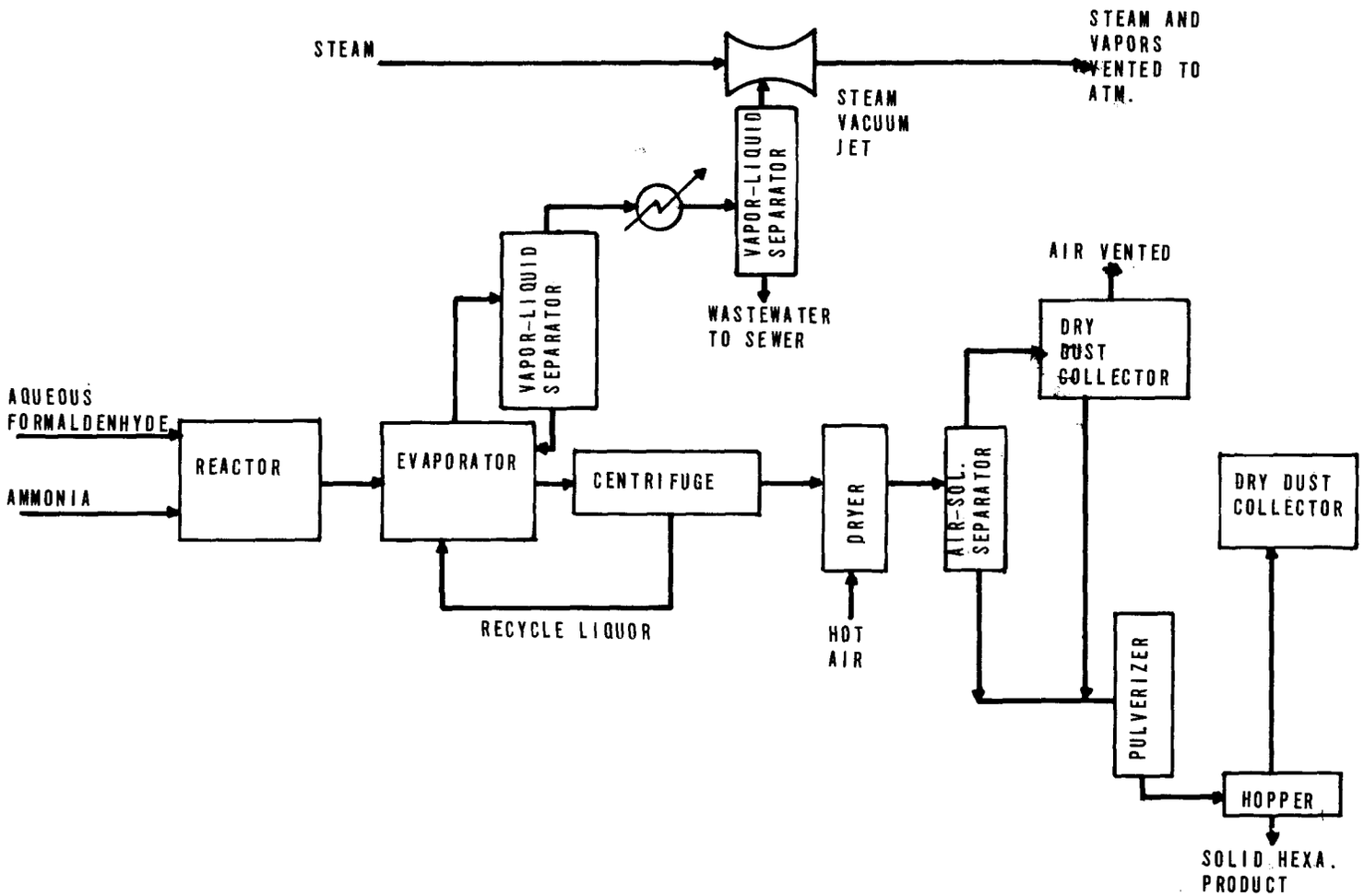

FIGURE 4-28
HEXAMETHYLENE TETRAMINE — SYNTHESIS WITH AMMONIA AND FORMALDEHYDE
PLANT 2

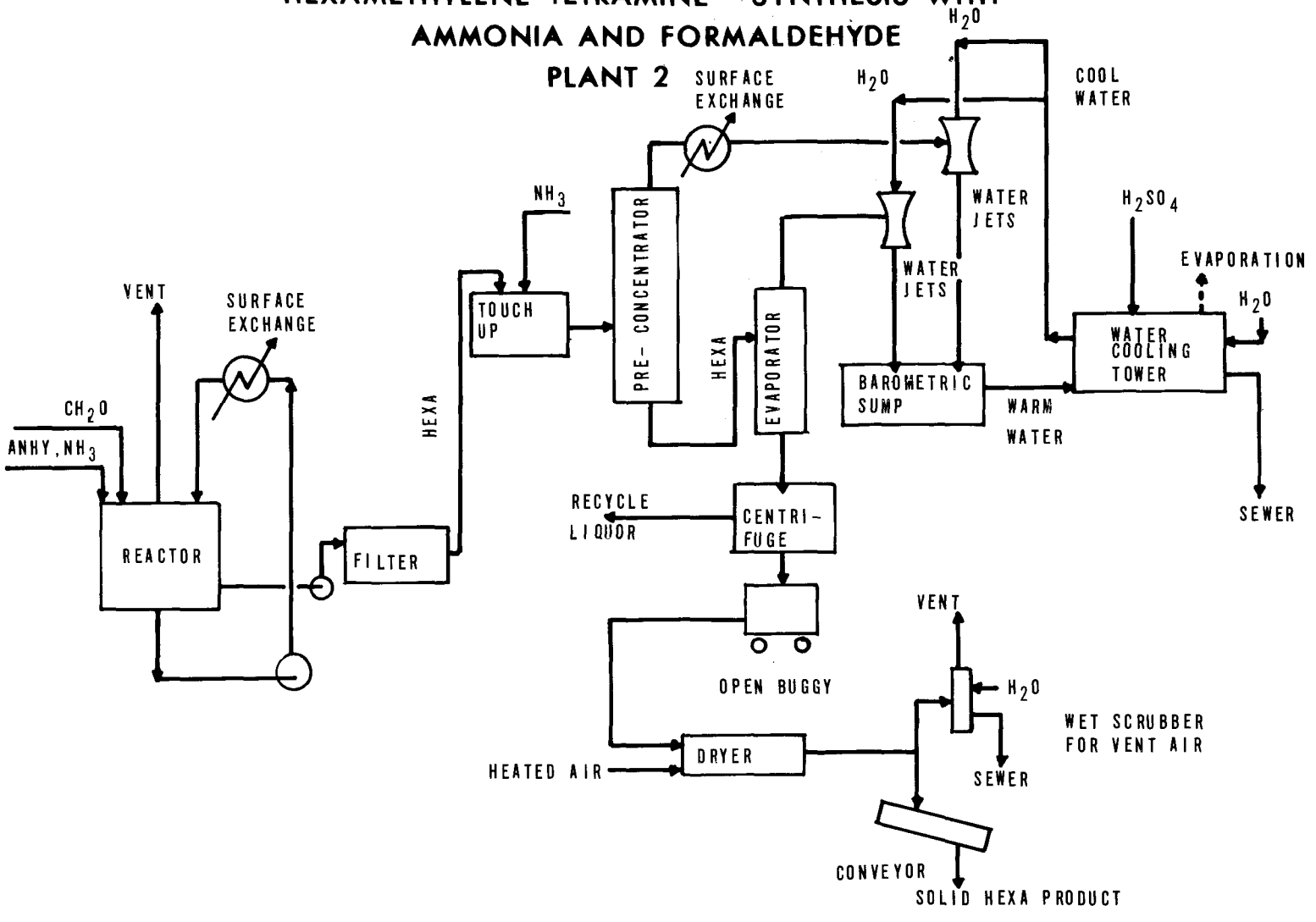

from this second separator and discharged to the sewer as waste water.

A steam jet is used to draw vacuum on the evaporator. Water vapor from the second separator is drawn off into the steam line as shown in Figure 4-28. The steam and water vapor then pass through a jet and are subsequently vented to the atmosphere.

The concentrated liquid effluent from the evaporator is sent to a centrifuge where solid crystals of hexamethylene are separated. The concentrate is recycled to the evaporator.

Hexamethylene crystals from the centrifuge are dried by hot air and pulverized before being shipped off in bags or drums. Air from this part of the process is cleaned using dry dust collectors.

A sampling program covering several weeks' operation at Plant 1 was conducted. The data on process RWL are summarized below on a probability basis:

	Process RWL Plant 1			
	Flow (liters/kkg)	BOD5 (kg/kkg)	COD (kg/kkg)	TOC (kg/kkg)
10% Occurrence	3,200	4.6	18.8	4.5
50% Occurrence	3,200	9.2	29.4	9.8
90% Occurrence	3,200	13.7	40.0	15.1

It should be noted that the RWL data presented from Plant 1 do not include the additional flows and pollutant loads from carry-over into the steam jet vacuum system. Some appreciation for the magnitude of these quantities can be gained by examining the process used in Plant 2.

A flowsheet for this process is shown in Figure 4-28. The liquid effluent from the reactor is sent to a pre-conditioner and evaporator operating in series. Water jets operating in a similar fashion to a barometric condenser draw vacuum on both units. Water from both jets is collected in a barometric sump. The warm water from the barometric sump is circulated through a forced draft evaporative cooling tower, with the cooled water recycled to the vacuum jets.

Sulfuric acid is added to the water in the cooling tower to react with the excess ammonia present. This is done to control the ammonia vapors which would be stripped off with the water vapor produced by evaporation in the tower.

Ammonium sulfate is produced by the reaction between ammonia and sulfuric acid.

A blowdown must be taken from the tower because the evaporation loss is not sufficient to balance the water formed in the chemical reaction to produce hexamethylene and the water present in the aqueous formaldehyde feed. It is also necessary to control the level of dissolved solids present in the circulating contact cooling water.

A second waste water stream is discharged from a wet scrubber used with the dryer for the hexamethylene crystal. The following tabulations summarize the RWL contribution from both the scrubber discharge and cooling tower blowdown.

	Process RWL Plant 2			
	Flow (liter/kkg)	BOD5 (kg/kkg)	COD (kg/kkg)	TOC (kg/kkg)
Cooling Tower Blowdown	5553.	71.5	116	42.7
Scrubber Blowdown	488.	11.7	112	28.3
Total RWL	6041.	83.2	228	71.0

These data, from Plant 2, are significantly higher, both with respect to flow and loading, than those obtained from Plant 1. The flow and loadings attributed to the wet scrubber in Plant 2 are not sufficient to explain the difference between the two plants. Instead, the difference relates back to the fact that Plant 1 does not condense the steam used to draw vacuum on the evaporator. Although Plant 1 uses a surface condenser ahead of the vapor-liquid separator, there may be significant carryover of contaminants to the steam jet. These contaminants are then vented to the atmosphere with the uncondensed steam. The data shown for Plant 2 also may not fully show the magnitude of this difference in that the flow from the cooling tower represents a blowdown and does not include evaporation losses.

The water circulation rate between the cooling tower and barometric condensers for Plant 2 is approximately 73,900 liters/kkg of hexamethylene.

The RWL data from Plant 1 at 50% occurrence was (median value) selected as the basis for BPCTCA. These waste waters are discharged to a municipal treatment plant, as are the wastes from Plant 2.

Product: Hydrazine Solutions

Process: The Raschig Process

Process RWL Subcategory: C

Chemical Reactions:

$$NaOH + Cl_2 \rightarrow \underset{\text{sodium hypochloride}}{NaOCl} + HCl$$

$$NaOCl + NH_3 \rightarrow \underset{\text{chloramine}}{NH_2Cl} + NaOH$$

$$NH_2Cl + NH_3 \rightarrow \underset{\text{hydrazine}}{N_2H_4} + HCl$$

The principal use for hydrazine is as a military missile fuel in which anhydrous hydrazine is required. Hydrazine also has a number of nonmilitary applications. The most important of these is maleic hydrazine, a plant growth regulator used for tobacco suckering and tree pruning. Other uses include wash-and-wear finishes, pharmaceuticals, anti-oxidants used in foam, hydrazine monobromide, and soldering flux.

A process flow diagram for the manufacture of hydrazine hydrate is shown in Figure 4-29.

Sodium hydroxide and chlorine are mixed in a reactor system to produce sodium hypochlorite. Glue is added to the solution as an inhibitor until the mix is viscous. A dilute solution of ammonia (5 to 15 percent) is added until a molar ratio of 3 NH_3 to 1 hypochlorite is obtained. This mixture forms chloramine which, when reacted with anhydrous ammonia in a ratio of 20:1 to 30:1, produces hydrazine. The reaction temperature normally reaches 130°C.

The effluent from the hydrazine reactor is fed to an ammonia recovery still where excess ammonia is taken off overhead and recycled back to the reactors. The tails are fed to an evaporator where concentrated sodium chloride is removed. The vapors from the evaporator are fractionated to yield (as bottoms) a commercial grade of hydrazine hydrate.

Anhydrous hydrazine may be produced from hydrazine hydrate by extractive distillation. Hydrazine salts are produced by neutralizing hydrazine hydrate with the appropriate acid and

FIGURE 4-29

HYDRAZINE HYDRATE-THE RASCHIG PROCESS

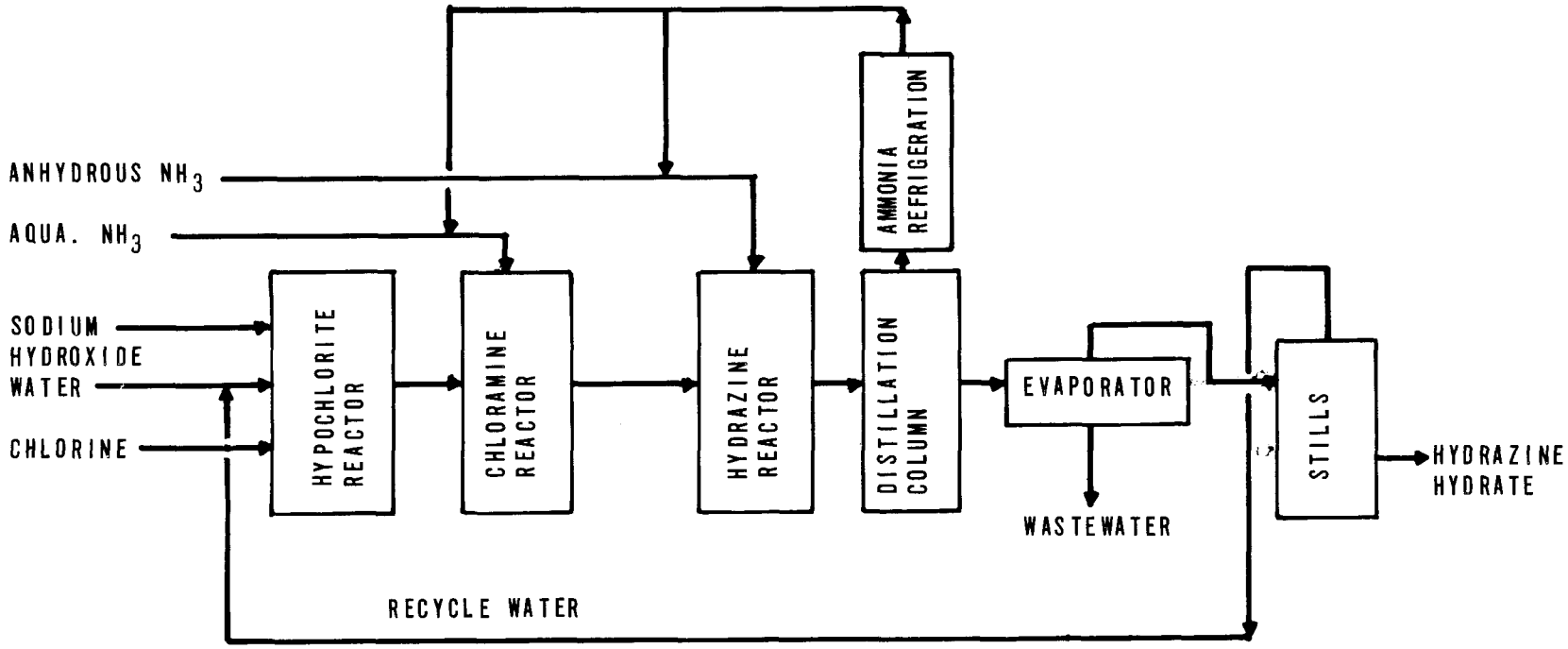

then dehydrating the resulting slurry. The salts produced are hydrazine hydrobromide, hydrazine hydrochloride and hydrazine sulfate.

The waste water stream from this process is a sodium chloride solution from the crystallizing evaporator. Process RWL calculated from the flow measurements and analyses of the waste water obtained in the sampling survey are indicated in the following tabulation. The extreme high chloride concentration in the waste water results in an inhibitory effect on the BOD_5 test and, consequently, the analytical results show a high COD/BOD_5 ratio. The low TOC is due to the lack of organic carbon involved in the process.

PROCESS FLOW

liter/kkg	30,300
gal/M lb.	3,630

BOD_5 RWL

mg/liter[1]	300
kg/kkg[2]	9.09

COD RWL

mg/liter[1]	3,800
kg/kkg[2]	115

TOC RWL

mg/liter[1]	-
kg/kkg[2]	-

[1]Raw waste concentrations are based on unit weight of pollutant per unit volume of process waste waters.
[2]Raw waste loadings are based on unit weight of pollutant per 1000 unit weight of product.

The process RWL shown above is the basis for BPCTCA.

Product: Isobutylene

Process: Extraction with Sulfuric Acid from a Mixture of C_4 Hydrocarbons

Process RWL Subcategory: C

High-purity isobutylene is required for applications such as the production of butyl rubber and the alkylation of aromatics. In the U.S., the most common process for manufacturing pure isobutylene is extraction with 65 percent sulfuric acid. The feedstock is usually a mixed C_4 cut from a refinery. The process is continuous and is characterized by extensive contact between water (as H_2SO_4) and hydrocarbons. As such, it is assigned to process Subcategory C (Aqueous Phase Reactions). It should be noted that regeneration of the sulfuric acid absorbent is considered as an integral part of the process.

A flow diagram for the extraction process is shown in Figure 4-30. The process consists of a countercurrent extraction system. The effluent from the final stage is flashed and goes to a regenerator where heat reverses the reaction and regenerates both acid and isobutylene. Temperature is kept below the point where polymerization would become a problem. Sulfuric acid is removed from the bottom of the regenerator and recycled after reconcentration. The regenerator off-gas, containing isobutylene and some light polymer plus t-butyl alcohol, is fractionated to produce 99+ percent isobutylene, and the bottoms can be further fractionated into t-butyl alcohol and diisobutylene.

Process RWL's for isobutylene extraction are summarized in the following tabulation:

PROCESS FLOW

liter/kkg	20,400
gal/M lbs.	2,440

BOD_5 RWL

mg/liter[1]	669
kg/kkg[2]	13.6

COD RWL

mg/liter[1]	3,150
kg/kkg[2]	64.1

FIGURE 4-30

ISOBUTYLENE—EXTRACTION FROM C_4 HYDROCARBONS WITH SULFURIC ACID

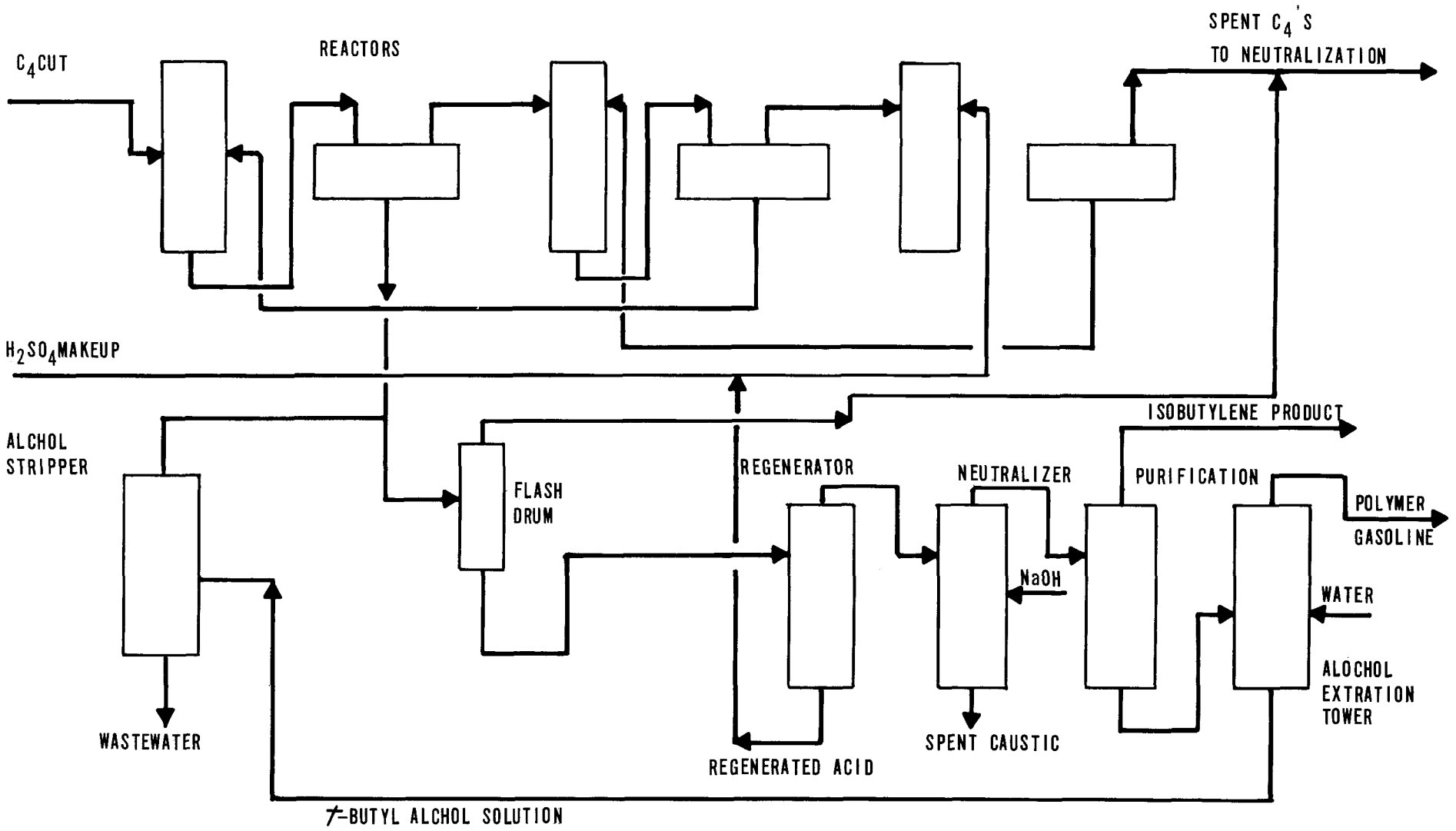

TOC RWL

mg/liter[1]	633
kg/kkg[2]	12.9

[1]Raw waste concentrations are based on unit weight of pollutant per unit volume of process waste waters.
[2]Raw waste loadings are based on unit weight of pollutant per 1,000 unit weights of product.

This process RWL data is the basis for BPCTCA. The wastes from this process are combined with those from other processing areas and treated by the activated sludge process before discharge.

Product: Sec-Butyl Alcohol

Process: Sulfonation and Hydrolysis of Mixed Butylenes

Process RWL Subcategory: C

Chemical Reactions:

$$\underset{\text{Butene-2}}{CH_3CH = CHCH_3} + \underset{\text{Sulfuric Acid}}{H_2SO_4} \longrightarrow \underset{\text{Sec-Butyl Sulfate}}{CH_3CH_2CHCH_3}$$

$$\underset{\text{Sec-Butyl Sulfate}}{CH_3CH_2CHCH_3 \atop HSO_4} + \underset{\text{Water}}{H_2O} \longrightarrow \underset{\text{Sec-Butyl Alcohol}}{CH_3CH_2CH(OH)CH_3} + \underset{\text{Sulfuric Acid}}{H_2SO_4}$$

Secondary butyl alcohol is made from mixed butylenes. However, because of its alternate uses, isobutylene is normally extracted from the C4 feedstock prior to the manufacture of secondary butyl alcohol. This is also done to prevent the formation of excessive quantities of tertiary butyl alcohol from isobutylene.

Normal butylenes are first absorbed by concentrated sulfuric acid (75 percent) to form isobutyl sulfate. This is subsequently hydrolyzed with water to secondary butyl alcohol and dilute sulfuric acid. A flow diagram for the process is shown in Figure 4-31. The extensive requirements for contact water usage make this continuous process typical of Subcategory F. The reconcentration of sulfuric acid for recycle is considered an integral part of the process. It should also be noted that this process for secondary butyl alcohol is analogous to that used to produce isopropyl alcohol from propylene.

The weak acid bottoms from the hydrolysis are reconcentrated by multistage vacuum evaporation. Normally, three evaporators in series are used to bring the acid concentration back to 75 percent strength. However, during the sampling program, only two were in service, with the final stage down for cleaning. This type of operation is possible by pulling a higher vacuum on the first two evaporators.

The overhead vapors from the first evaporator are drawn through a surface condenser which utilizes noncontact

FIGURE 4-31

SEC—BUTYL ALCOHOL—SULFONATION AND HYDROLYSIS OF MIXED BUTYLENES

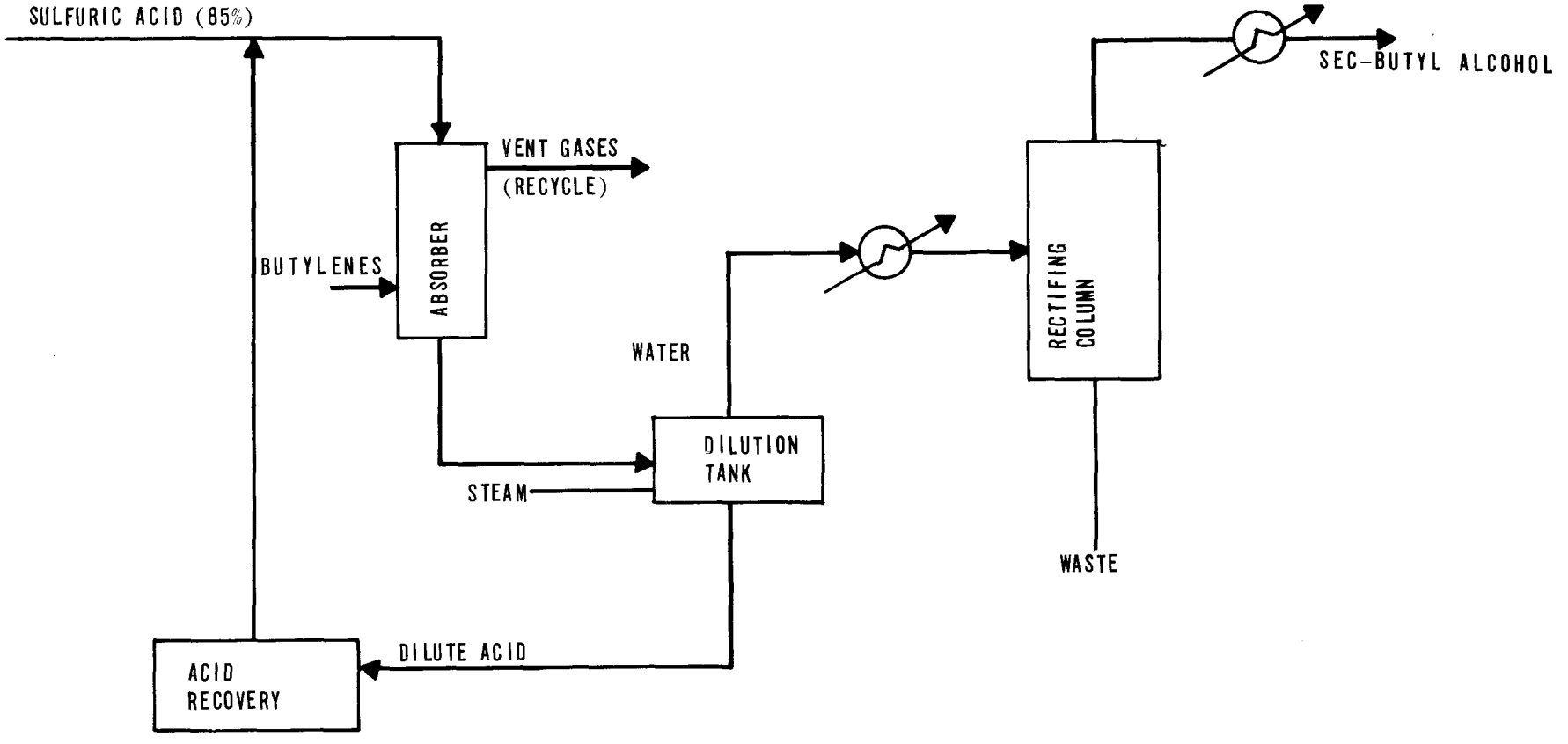

cooling water. The noncondensible vapors are entrained in two barometric condensers operating with steam jet vacuum pumps in series. The second- and third-stage evaporators are also equipped with this condenser-steam jet arrangement.

Apart from dehydrogenation to butadiene, secondary butyl alcohol production is the main end use for normal butylenes. Secondary butyl alcohol itself is used mainly as a solvent or to make secondary butyl acetate or methyl ethyl ketone. It should be noted that the alcohol product is obtained as an aqueous solution in this process. The product is really an azeotropic binary mixture drawn as a side stream from the crude secondary butyl alcohol scrubber-stripper. It contains approximately 70 wt percent (36 mole percent) alcohol and 30 wt percent (64 mole percent) water, and is withdrawn at a minimum boiling point of approximately 90°C. Dehydration of the alcohol is accomplished in subsequent processes, and this waste water is not included in the wasteload computed for the alcohol process.

During the field data collection program, two plants utilizing the previously described process were sampled. The following brief tabulation summarizes the RWL for each plant:

	Plant 1	Plant 2
PROCESS FLOW		
liters/kkg	64,900	626
gal/M lb		
BOD5 RWL		
mg/liter[1]	374	22,800
kg/kkg[2]	24.3	14.2
COD RWL		
mg/liter[1]	3,280	62,000
kg/kkg[2]	213	38.8
TOC RWL		
mg/liter[1]	665	38,300
kg/kkg[2]	43.2	23.9

[1]Raw waste concentrations are based on unit weight of pollutant per unit volume of process waste waters.
[2]Raw waste loadings are based on unit weight of pollutant per 1,000 unit weights of product.

The RWL from Plant 2 was used to define BPCTCA. This plant utilizes much more internal recycle than Plant 1.

Product: Acrylonitrile

Process: Ammonoxidation of Propylene

Process RWL Subcategory: C

Chemical Reaction:

$$2\ CH_2CHCH_3 + 2\ NH_3 + 3\ O_2 \longrightarrow 2\ CH_2\ CHCN + 6\ H_2O$$

propylene Ammonia acrylonitrile

Acrylonitrile is used in the manufacture of acrylic fibers, Acrylonitrile- Butadiene-Styrene (ABS) and Stryene-Acrylonitrile (SAN) resins, and nitrile rubber.

A typical process flow diagram for the manufacture of acrylonitrile via ammonoxidation of propylene is shown in Figure 4-32.

Raw materials for the production of acrylonitrile are propylene, air, and ammonia. These feeds are introduced into a fluid bed catalytic reactor operating at 5 - 30 psig and 200°C to 260°C. The reactor effluent is scrubbed in a counter-current absorber and the organic materials are recovered from the absorber water by distillation. Hydrogen cyanide, water, light ends, and high boiling impurities are removed from the crude acrylonitrile by fractionation to produce a specification acrylonitrile product.

Although the actual ammonoxidation reaction is vapor-phase, the process was considered within Subcategory C because of the aqueous separation and purification train.

The major water pollution sources of this process are the process waste waters discharged from the steam stripping columns as shown in the process flow diagram. Process RWL calculated from flow measurements and analyses of the waste streams are indicated in the following tabulation:

FIGURE 4-32
ACRYLONITRILE — AMMOXIDATION OF PROPYLENE

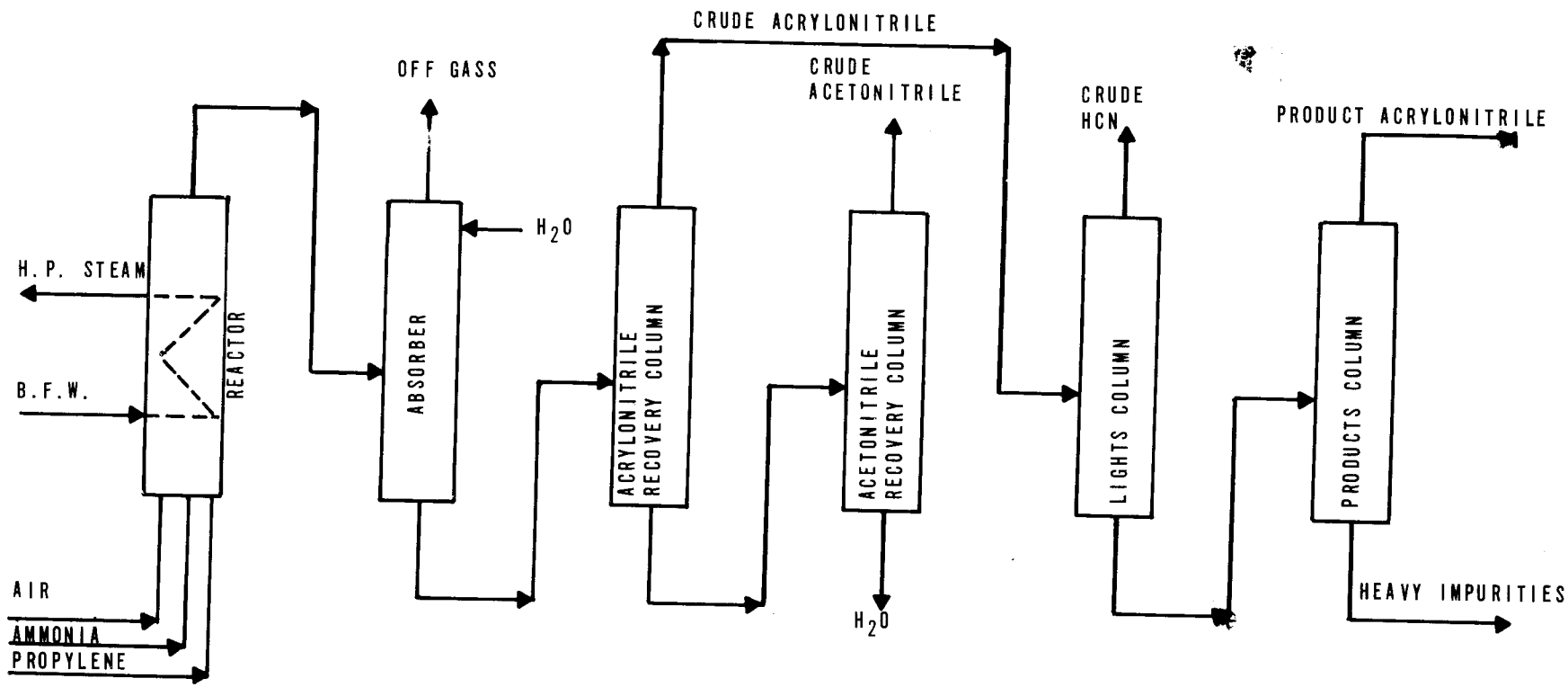

	Plant 1			Plant 2	Plant 2	Plant 3
			Sampling Periods			
	#1	#2	#3	#1	#2	#1
PROCESS FLOW						
liter/kkg	3,920	3,920	3,920	6,590	4,010	2,820
gal/M lb	471	471	471	790	480	338
BOD5 RWL						
mg/liter[1]	18,000	18,700	19,300	3,330	13,900	----
kg/kkg[2]	71.7	73.3	75.8	21.9	55.5	----
COD RWL						
mg/liter[1]	57,400	60,300	60,700	21,100	36,200	41,100
kg/kkg[2]	229	237	238	139	145	116
TOC RWL						
mg/liter[1]	25,600	24,000	25,100	8,700	15,300	19,100
kg/kkg[2]	102	94.2	98.6	57.3	61.2	53.9

[1] Raw waste concentrations are based on unit weight of pollutant per unit volume of process waste waters.
[2] Raw waste loadings are based on unit weight of pollutant per 1000 unit weight of product.

The foregoing data indicate that the RWL of Plant 1 is higher than that of Plants 2 and 3. This difference is attributed to the discharges by Plant 1 of light hydrocarbons that are removed as the overhead from the acetonitrile purification column comes into the sewer lines. The analytical results from the sampling survey also reveal that, in addition to the pollution parameters shown in the above tabulation, the concentration of parameters such as nitrogen, sulfate, and cyanide may be at levels potentially hazardous to the biological pretreatment process.

An average of the RWL data from Plants 2 and 3 was considered as the basis for BPCTCA. It should be noted that all of the plants surveyed currently use deep-well injections to dispose of wastes from the manufacture of acrylonitrile.

The alternative routes for the manufacture of acrylonitrile include: 1) catalytic dehydration of ethylene cyanohydrin; 2) catalytic reaction of acetylene and hydrogen cyanide; and 3) catalytic reaction of propylene with nitric oxide. However, present practice concentrates exclusively on the ammonoxidation of propylene.

Product: Cresol (Synthetic)

Process: Methylation of Phenol

Process RWL Subcategory: C

Chemical Reaction:

$$C_6H_5OH + CH_3OH \longrightarrow CH_3C_6H_4OH + H_2O$$

phenol methanol cresol

Cresol (cresylic acid) is an isomeric mixture (o-, m-, and p-cresol) obtained by refining the phenolic constituents present in coal tar, refining the petroleum acids formed during the thermal and catalytic cracking of petroleum, or by producing cresols synthetically. Cresols are used primarily as raw materials for the production of phenolic resins, tricresylphosphate, disinfectants, and solvents.

The facility visited during the field survey produced an isomeric mixture of cresols by the methylation of phenol. Figure 4-33 is a process flow diagram of this production technique.

The first step in the process is the preparation of the reactor feed. Fresh and recycled methanol and phenol are mixed in a weight ratio close to 2.5:1. The mixed stream is then vaporized, and condensing Dowtherm vapors are used to vaporize and heat the feed to 300°C. The reaction is carried out at atmospheric pressure in a mixed-bed reactor which contains activated alumina catalyst. The heat of reaction is removed by passing liquid Dowtherm through the tubes imbedded in the mixed bed of the reactor. (The heat of reaction is approximately 20 Kcal/mole.) Some of the heat evolved by the reaction will be taken up as sensible heat by the reactants, which are heated from 300°C to the reaction temperature of 350°C. The contact time in the reactor for 52 percent reaction completion is less than 30 seconds. A typical reaction mixture distribution on a water-free basis is given below.

	Weight %
Phenol	48
o-Cresol	30
m- and p-Cresol	12
2, 6-Xylenol	15
Anisoles and Hexamethylbenzene	5

FIGURE 4-33

CRESOLS, SYNTHETICS-METHYLATION OF PHENOL

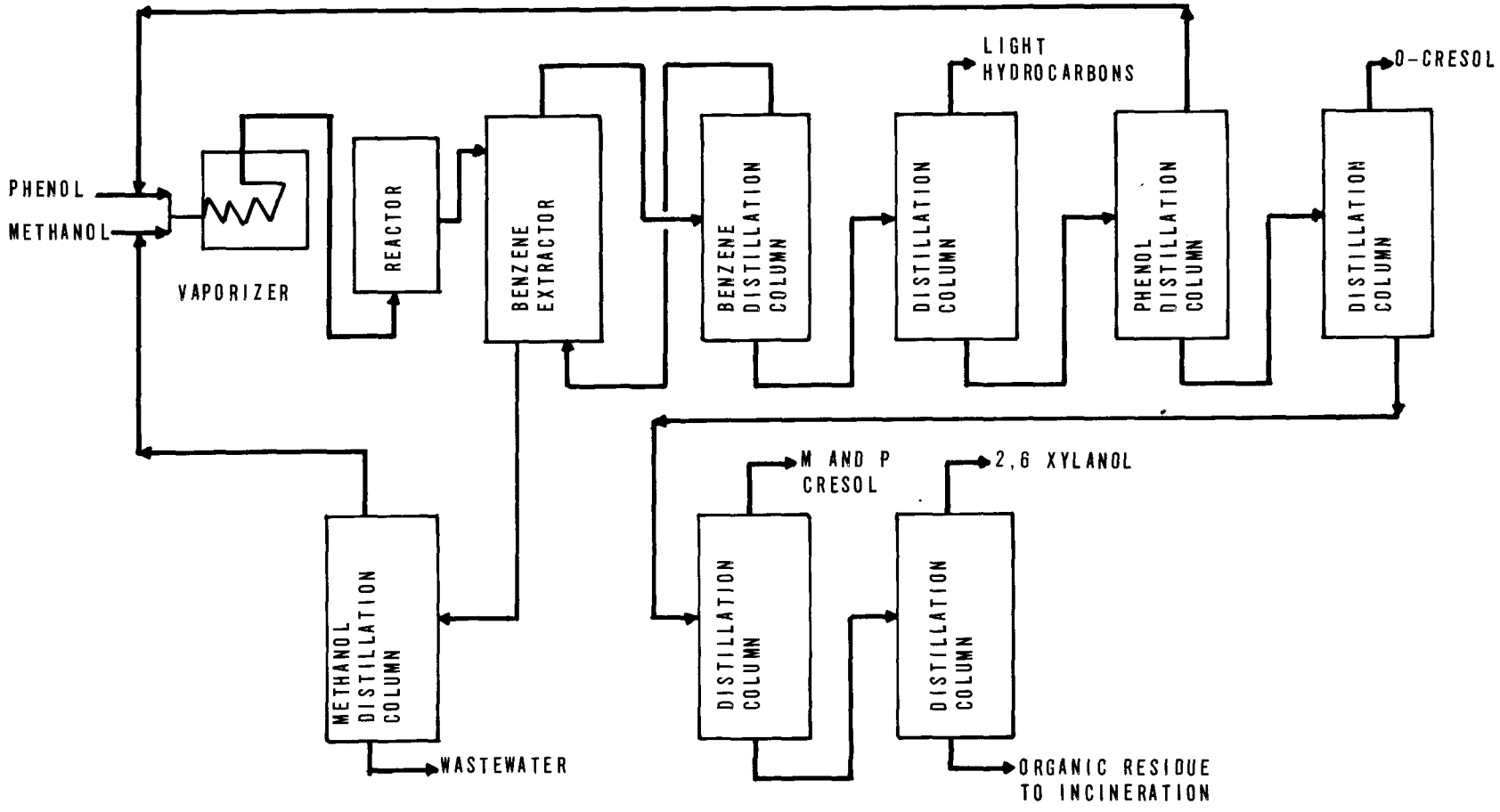

The vapors leaving the reactor are condensed and cooled to about 25°C, and then sent to a phase separator. The vapor space is provided with a vent in order to periodically remove any noncondensables (CO_2, CH_4) which might be produced in the reactor. The weight percent of water in the liquid phase is below 10 percent.Consequently, an aqueous phase will not appear, because the water will stay in the organic phase. The solubility level of water in phenol is close to 34 gms/100 gms phenol at 25°C. The presence of cresols and xylenol undoubtedly decreases the solubility limit, but the decrease is not sufficient to form a separate aqueous phase.

The liquid phase is sent to an extraction column in which benzene (containing some methanol) is circulated countercurrent to the liquid product stream. The phenol, cresols, xylenols, and by-products are transferred to the benzene phase, while the water and the methanol form an aqueous phase.

The aqueous phase is then sent to a methanol recovery column, in which methanol is removed as the distillate, while water (with small amounts of phenol) remains as bottoms. The methanol is recycled to the reactor feed-preparation section, while the water is discharged. The organic phase, containing benzene and the reactor products, is sent to the benzene recovery column, where this solvent is distilled overhead and recycled to the extraction unit. This column is operated at atmospheric pressure, with an overhead temperature close to 75°C. Cooling water is used in the condenser, and condensing Dowtherm vapors are used in the reboiler.

The bottoms stream leaving the solvent recovery still is sent to the distillation column, in which anisole and light by-products are removed in the overhead. Phenol is recovered in a subsequent distillation step and recycled to the reactor section. The bottoms from the phenol recovery column are then sent to the product recovery section. In the first column, o-cresol is recovered as distillate; in the second, m-and p-cresol isomeric mixture is distilled overhead. The bottoms are sent to the 2, 6-xylenol column, in which this co-product is distilled off, while the bottoms containing the heavier by-products (such as hexamethyl-benzene) are sent to organics disposal.

The major water pollution source is the water stream withdrawn as the bottom of methanol recovery column. Process RWL's calculated from flow measurements and analyses

of the waste water samples are indicated in the following tabulation:

PROCESS FLOW

liter/kkg	334
gal/M lb.	40

BOD5 RWL

mg/liter[1]	143,000
kg/kkg[2]	47.7

COD RWL

mg/liter[1]	303,000
kg/kkg[2]	101

TOC RWL

mg/liter[1]	104,000
kg/kkg[2]	34.7

[1]Raw waste concentrations are based on unit weight of pollutant per unit volume of process waste waters.
[2]Raw waste loadings are based on unit weight of pollutant per 1,000 unit weights of product.

The analytical results also indicate that the phenol concentration in the waste stream is at a level which may be hazardous to biological treatment processes if not properly acclimated. The waste stream can either be pretreated with lime to form calcium phenolate before being discharged into a biological treatment processes or can be steam stripped to reduce the phenol concentrations.

The process RWL is the basis for BPCTCA. The waste from the plant is currently discharged to the municipal treatment plant.

Product: p-Aminophenol

Process: Catalytic Reduction of Nitrobenzene

Process RWL Subcategory: C

Chemical Reactions:

$$C_6H_5NO_2 + 2\,H_2 \xrightarrow[\text{metal catalyst}]{H_2SO_4} C_6H_4(OH)NH_2 + H_2O$$

nitrobenzene — p-aminophenol

Typical Material Requirements:

Basis	1000 kg p-Aminophenol
Nitrobenzene	1800 kg
Sulfuric Acid	1550 kg
Surfactant	20 kg
Anhydrous Ammonia	500 kg
Toluene	80 kg
Hydrogen Gas	
Nitrogen Gas	
Antioxidants	
By-Products	
Aniline	220 kg

p-Aminophenol is versatile in its use as a dye intermediate. It can be used in the preparation of disperse, nitro, acid, mordant, direct, sulfur, and oxidation dyes. It is also widely used as a photographic developer. The by-product aniline produced during the reaction also has wide uses in the dye, drug, rubber, plastics, and animal-feed industries.

Production of p-aminophenol is based upon the reduction of nitrobenzene with hydrogen in the presence of aqueous sulfuric acid and a metal- containing catalyst (platinum, palladium, or mixtures of the two), as shown in Figure 4-34. The raw materials (nitrobenzene, deionized water, hydrogen gas, sulfuric acid, surfactants, and the metal catalyst) are fed into a reactor at a temperature ranging from about 60° to 120°C. Prior to completion of the reaction, the reduction of the nitrobenzene is interrupted for catalyst recovery and recycle. During the reaction a distinct interface forms between the reaction products and the

FIGURE 4-34
PARA-AMINOPHENOL- CATALYTIC REDUCTION OF NITROBENZENE

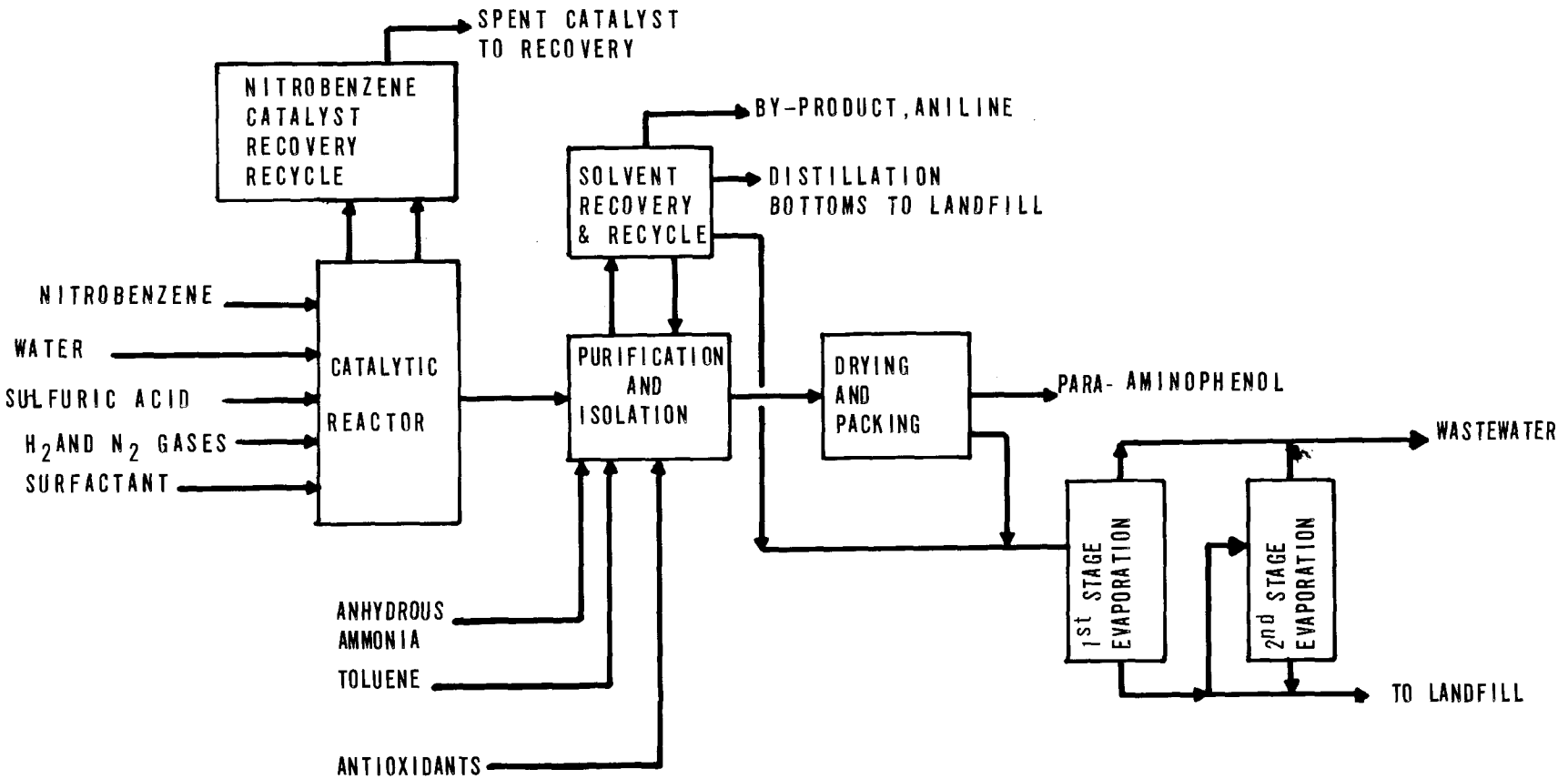

catalyst-containing nitrobenzene. To recover the catalyst the nitrobenzene layer is separated and used in a subsequent reduction step.

The reaction products proceed to a purification and isolation step. Additional materials (anhydrous ammonia and toluene) are added to facilitate separation of the by-product aniline from product p-aminophenol. After isolation of the aniline, solvent is recovered and recycled to the purification and isolation step. Following purification, the p-aminophenol is dried and packaged for sale.

The major pollution sources of the process are the waste waters generated during the aniline recovery step and the p-aminophenol drying step. These waste waters are collected and passed through two evaporators connected in series. This evaporation process separates the very concentrated ammonium sulfate wastes for landfill disposal. It was claimed by the plant which was visited during the sampling survey that the evaporation process should be considered as pollution abatement facilities rather than as part of the manufacturing process. However, separate samples of influent to the evaporator and effluent were analyzed and the RWL's are presented in the following tabulation.

	Influent to Evaporators		Effluent from Evaporators
	Sample Period #1	Sample Period #2	Sample Period #1
PROCESS FLOW			
Liter/kkg	15,000	15,000	12,600
gal/M lb	1,800	1,800	1,510
BOD_5 RWL			
mg/liter[1]	59,300	59,300	3,300
kg/kkg[2]	890	886	41.6
COD RWL			
mg/liter[1]	115,000	101,000	5,850
kg/kkg[2]	1,725	1,508	73.7
TOC RWL			
mg/liter[1]	33,600	27,100	1,730
kg/kkg[2]	505	407	21.7

[1]Raw waste concentrations are based on unit weight of pollutant per unit volume of process waste waters.
[2]Raw waste loadings are based on unit weight of pollutant per 1000 unit weights of product.

The process RWL based on the effluent from the evaporators was considered as the basis for BPCTCA. The effluent from the evaporators (aqueous condensate) is combined with waste waters from other processes and treated in an activated sludge plant prior to discharge to surface waters.

Noncontact waste waters include cooling tower blowdown and boiler condensate. Each of these wastestreams is bled continuously for the control of dissolved solids. The streams are combined with the treated process waste waters and eventually discharged to a receiving stream.

p-Aminophenol can also be prepared conveniently by the Beehamp method of reducing p-nitrophenol in the presence of iron filings in an acid medium. Alternatively, the product may be prepared by catalytic hydrogenation of p-nitrophenol, by treatment of phenylhydroxylamine with an acid catalyst, (such as sulfuric acid), by reduction of azoxybenzene in acid solution, and by treatment of p-chlorophenol with ammonia.

Product: Propylene oxide

Process: Chlorohydrin Process

Process RWL Subcategory: C

Chemical Reactions:

$$C_3H_6 + HOCl \longrightarrow HOCH_2CH_2CH_2Cl$$

propylene hypochloric acid propyl chlorohydrin

$$2\ HOCH_2CH_2CH_2Cl + Ca(OH)_2 \longrightarrow 2\ CH_3CH\underset{O}{\frown}CH_2 + CaCl_2 + 2\ H_2O$$

propyl chlorohydrin lime propylene oxide calcium chloride water

The most important outlet for propylene oxide is in the manufacture of propylene glycol. It is also used during the production of polyethers, which are in turn used in the manufacture of urethane foams and elastomers.

The manufacture of propylene oxide from propylene is similar to that of ethylene oxide by the chlorohydrin route. In fact, many propylene oxide manufacturing facilities are converted ethylene oxide plants which were rendered obsolete by the advent of direct oxidation. In recent years, considerable research has been undertaken to discover a viable process for making propylene oxide without using chlorine. A number of alternatives have been developed, including epoxidation of propylene by means of hydroperoxide and direct oxidation of propylene.

Production of propylene oxide by the chlorohydrin process involves a reaction between propylene and chlorine. The process flow sheet is shown in Figure 4-35. The raw materials are fed into a reactor and water is added. The reaction products are primarily chlorohydrin and dichlorohydrin. Vent gases from the reactor are passed through a water scrubber. A second stage caustic scrubber is also employed to neutralize potential acid carry-over in the off-gases.

Following the caustic scrubbing, the gases are passed to an oil absorption unit where propylene dichloride is

FIGURE 4-35

PROPYLENE OXIDE CHLOROHYDRIN PROCESS

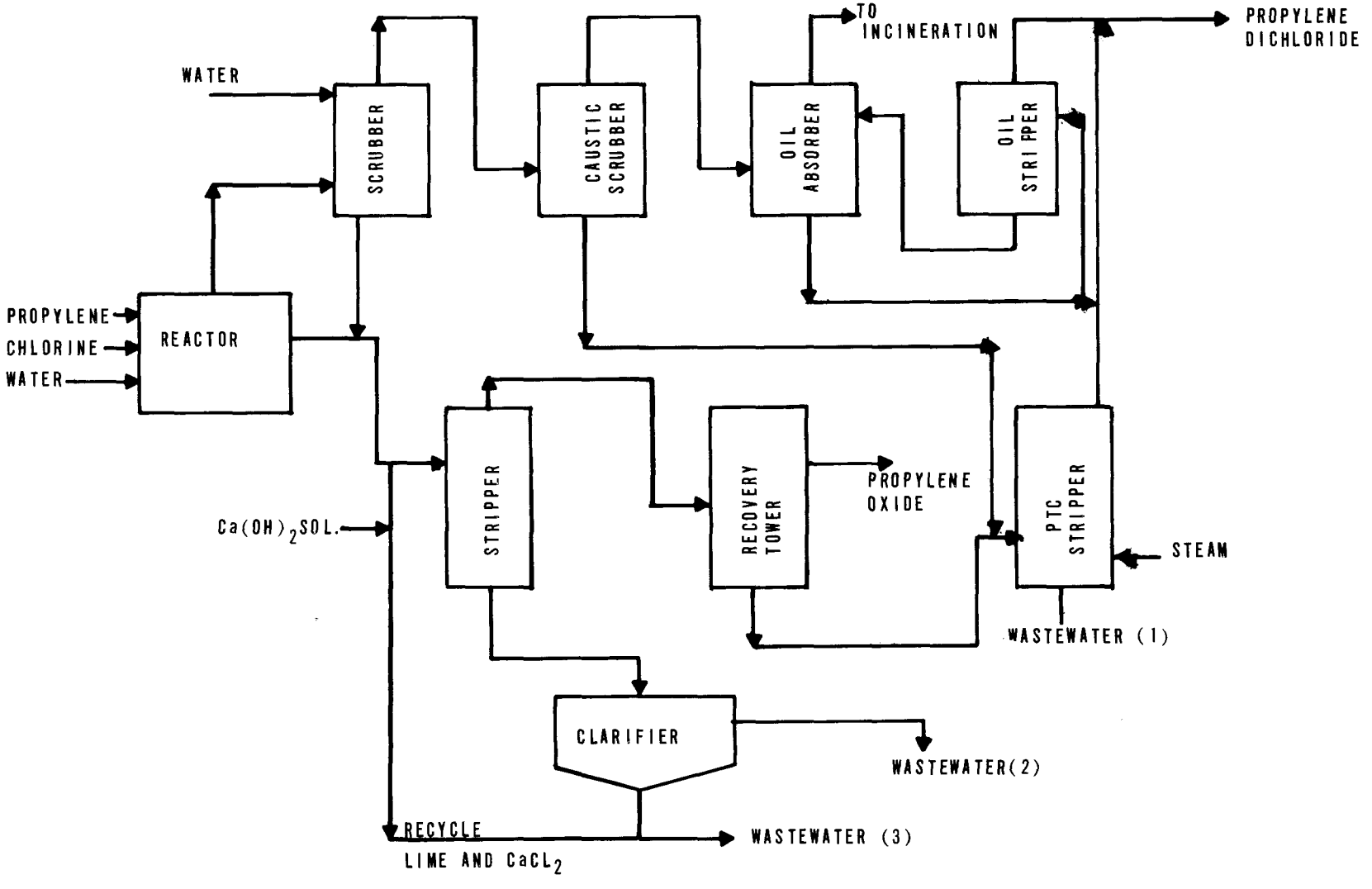

selectively concentrated and recovered. (An activated carbon adsorption system may be substituted for the oil absorption unit.) Other reactor gases, such as a propylene and propane are often vented to a fuel gas supply. At some installations, pure propane may be recovered in a dehydrator (activated alumina).

Reaction products, containing mainly propyl-chlorohydrin, are sent to a saponification reactor. A lime slurry is fed into the reactor along with live steam. In the reactor, propyl-chlorohydrin is converted to propylene oxide. Dichlorohydrin is also converted to propylene dichloride, which may be recovered as a by-product. Following the lime addition, the products are passed through a stripper. The products (propylene oxide and propylene dichloride) are separated from unreacted lime and calcium chloride. The unreacted lime solution is passed through a clarifier from which the underflow, containing unreacted lime, is recycled back to the saponification reactor; the overflow is discharged as waste water.

The product is first passed through a recovery tower, where propylene oxide is separated. The underflow, containing propylene dichloride, is sent to a steam stripper where propylene dichloride is separated from other impurities. The propylene dichloride is combined with the propylene dichloride separated from the off-gases. Bottoms from the stripper constitute a second major waste stream.

Production facilities for propylene oxide were visited during the sampling period, and samples of the process waste waters were obtained. Process raw waste loads calculated from flow measurements and analyses of these waste waters are indicated in the tabulation below:

	Plant 1		Plant 2	Plant 3
	Sample Period #1	Sample Period #2	Sample Period #1	Sample Period #1
PROCESS FLOW				
liters/kkg	60,000	50,200	69,300	66,000
gal/M lb.	7,150	6,020	8,300	7,910
BOD5 RWL				
mg/liter[1]	290	575	480	578
kg/kkg[2]	17.2	28.9	33.2	38.1
COD RWL				
mg/liter[1]	2,480	2,740	1,680	2,580
kg/kkg[2]	148	138	116	170

TOC RWL				
mg/liter[1]	310	320	365	385
kg/kkg	18.6	16.0	25.3	25.4

NOTE: [1]Raw concentrations are based on unit weight of pollutant per unit volume of process waste waters.

[2]Raw waste loadings are based on unit weight of pollutant per 1000 unit weights of product.

A plant average of the values presented above was used as the basis for BPCTCA. The waste waters from all three plants are currently combined with wastes from other processes and pumped to settling basins from which they are discharged. The high flows may be partially explained by the fact that a large quantity of water is required in the reactor and also in the many scrubbers. Furthermore, a large quantity of stoichiometric water is formed during the reaction.

It is possible that both pollutant loadings and flows may vary at other production facilities. The pollutant loadings may be greatly increased if propylene dichloride is not recovered following separation of the propylene oxide. At such an installation, the flows would probably be lower since the propylene dichloride stripper would not be required.

An additional feature of the process plant visited during the sampling period which may differ at other installations relates to the recycling of unreacted lime. A clarifier had been installed to remove lime and calcium chloride from the waste water. These materials were then recycled to the reactor, thus reducing the total flow and the pollutant loadings. This practice was considered as part of the process since required materials were recycled.

Product: Pentaerythritol

Process: Aldehyde Condensation

Process RWL Subcategory: C

Chemical Reactions:

$$4HCHO + CH_3CHO + NaOH \longrightarrow C(CH_2OH)_4 + HCOONa$$

formaldehyde	acetaldehyde	sodium hydroxide	pentaerythritol	sodium formate

The most important end use of pentaerythritol is in the manufacture of alkyl resins. Next in importance are pentaerythritol resin esters, which are used in floor polish and in flexographic inks. Other applications of pentaerythritol esters are in the manufacture of fire-retardant paints, use as high pressure lubricants, and production of PVC plasticizers of low volatility suitable for use in wire insulation.

A typical process flow diagram for producing pentaerythritol by aldehyde condensation is shown in Figure 4-36. The major pollution sources of the process are residue from the distillation column and mother liquors withdrawn from the purification units. The condensates from the steam jets which are used to pull vacuum are recycled back to the process, and are not considered waste waters. The process RWL calculated from the flow measurements and analyses of waste water samples obtained in the sampling period are presented in the following tabulation:

PROCESS FLOW	
liters/kkg	10,200
gal/M lbs	1,220
BOD_5 RWL	
mg/liter[1]	38,100
kg/kkg[2]	390
COD RWL	
mg/liter[1]	155,000
kg/kkg[2]	1,580

FIGURE 4-36
PENTAERYTHRITOL — ALDEHYDE CONDENSATION

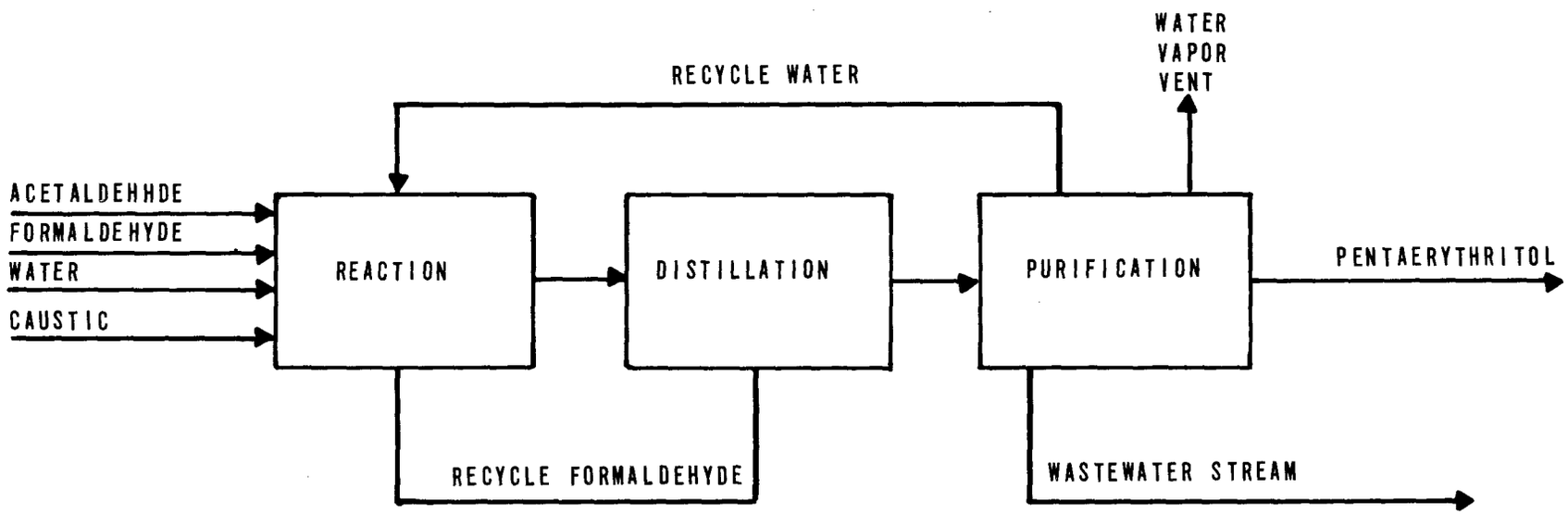

TOC RWL

mg/liter[1]	81,200
kg/kkg[2]	830

[1]Raw waste concentrations are based on unit weight of pollutant per unit volume of process waste waters.
[2]Raw waste loadings are based on unit weight of pollutant per 1000 unit weights of product.

The above process RWL data were used as the basis for BPCTCA. The waste water from this process is combined with other wastes for treatment in an activated sludge plant.

Product: Saccharin

Process: Synthesis from Phthalic Anhydride Derivatives

Process RWL Subcategory: C

Saccharin is the imide of the mixed anhydride of o-carboxylbenzenesulfonic acid. It is a powerful sweetening agent, having a sweetness from 550 to 750 times stronger than cane sugar. Saccharin has no food value and is used as a sugar substitute in many applications.

A continuous process for the manufacture of saccharin from pnthalic anhydride derivatives is shown in Figure 4-37.

The phthalic anhydride derivatives along with water and a 50 percent sodium hydroxide solution enter the reactor. A metal catalyst is used during the reaction. The fumes leaving this reactor are scrubbed with water and sodium hydroxide. The resultant waste water flows to a neutralization tank, where caustic is added to raise the pH.

The product mixture from the first reactor is then chlorinated in the second reactor, and the fumes from this reaction include chlorine, hydrochloric acid, and water vapor. These fumes are also piped to the aforementioned caustic scrubber. A portion of the metal catalyst is removed from the second reactor for regeneration. The catalyst is treated with sodium hydroxide and then filtered. The filtrate goes to the neutralizer, while the catalyst is recycled to the first reactor.

The products from the second reactor are reacted with NH3 in the third reactor, while any unreacted ammonia is vented to an absorber where the ammonia is absorbed with water and returned to the third reactor. An organic solvent is used to extract the product saccharin from the reaction mixture. The raffinate stream from the extraction operation is first neutralized and then distilled to recover the solvent. The extracted phase is steam stripped to recover more solvent, which is condensed and recycled back to the third reactor. The aqueous solution leaving the stripper is precipitated by the addition of hydrochloric acid. The precipitate is further concentrated by filtration, crystallized under vacuum conditions and then dried to produce the product saccharin. The filtrate is neutralized by a caustic solution prior to its discharge to the sewer.

The major water pollution sources of the process are the waste waters from the caustic scrubber, catalyst filtration

FIGURE 4-37
SACCHARIN — SYNTHESIS FROM PHTHALIC ANHYDRIDE DERIVATIVES

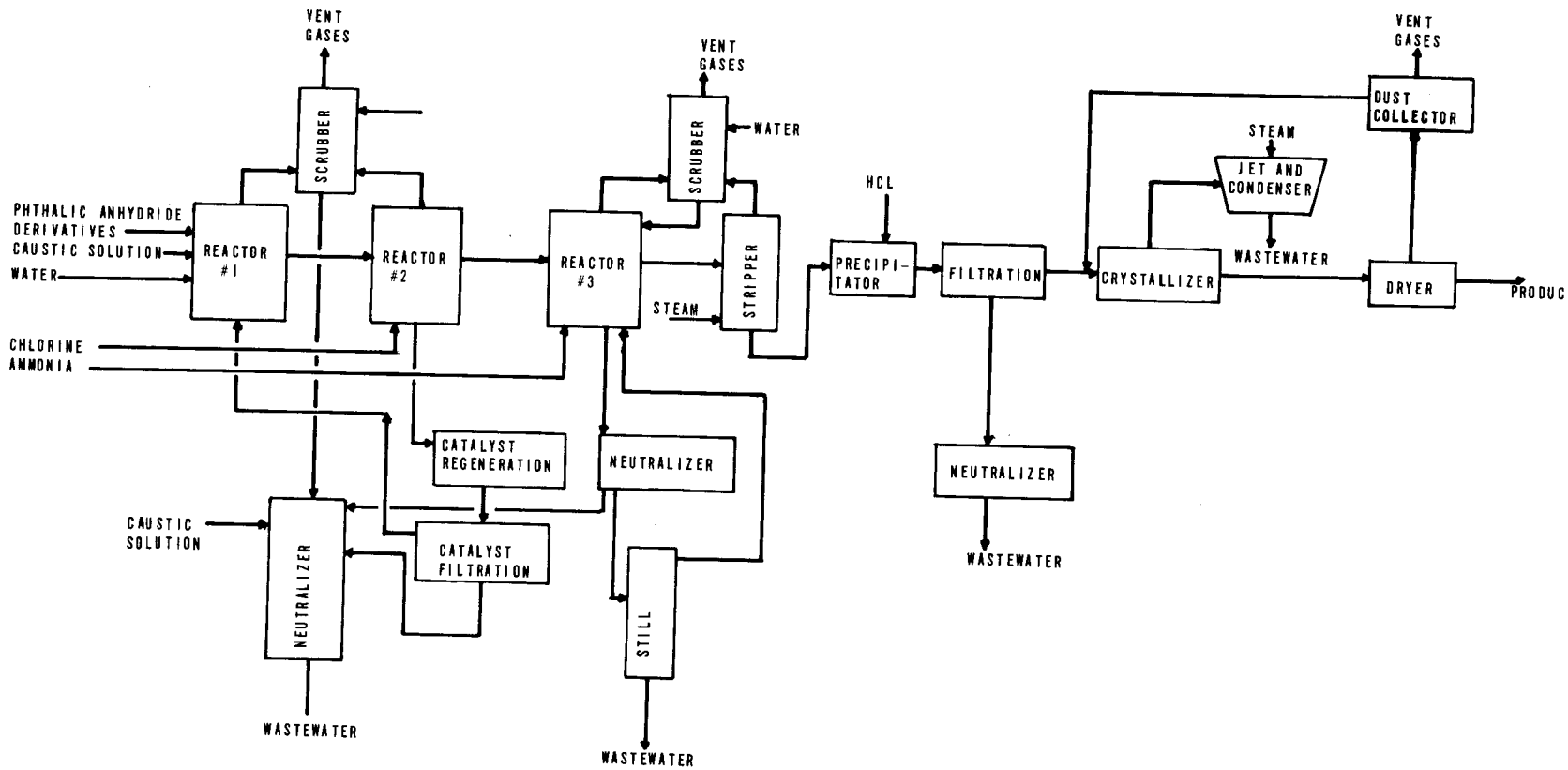

unit, solvent recovery still, product filtration unit, and barometric condenser. Process RWL's calculated from flow measurements and analyses of the waste water streams are presented in the following tabulation. The analytical results also indicate that, in addition to the parameters shown in the tabulation, pollution parameters such as nitrogen, sulfate, chloride, and metals may be at levels which can be potentially hazardous to the biological treatment process.

PROCESS FLOW	
liter/kkg	269,000
gal/M lb	32,200
BOD5 RWL	
mg/liter[1]	940
kg/kkg[2]	253
COD RWL	
mg/liter[1]	3,270
kg/kkg[2]	879
TOC RWL	
mg/liter[1]	1,430
kg/kkg[2]	384

[1]Raw waste concentrations are based on unit weight of pollutant per unit volume of process waste waters.
[2]Raw waste loadings are based on unit weight of pollutant per 1,000 unit weights of product.

Product: o-Nitroaniline

Process: Ammonolysis of o-Nitrochlorobenzene

Process RWL Subcategory: D

Chemical Reaction:

$$\underset{\text{o-nitrochlorobenzene}}{NO_2C_6H_4Cl} + \underset{\text{Ammonia}}{NH_3} \text{ (excess)} \xrightarrow{H_2O} \underset{\text{o-Nitroaniline}}{NO_2C_6H_4NH_2} + \underset{\text{ammonium chloride}}{NH_4Cl}$$

The manufacture of o-nitroaniline is similar to that of p-nitroaniline, which is described in the next section. A typical process flow diagram is shown in Figure 4-38.

The o-nitrochlorobenzene and ammonia enter the batch reactor, and o-nitroaniline is formed. The excess ammonia in the reaction mixture is distilled off the absorbers, from which ammonia is recycled back to the reactor. The aqueous stream from the distillation step goes to a washing operation and proceeds to dehydration and refining operations. Both the dehydration and the refining steps are performed under vacuum and steam jets with barometric condensers are generally used in pulling vacuum for these operations. The refined o-nitroaniline may be used directly or it may be further transformed into a flake.

The major water pollution sources of the process are waste waters withdrawn from the scrubber in the ammonia-recovery system, from the washing step, and the condensates from barometric condensers. Process RWL's calculated from flow measurements and analyses of the waste water streams are indicated in the following tabulation. The analytical results also indicate that waste streams may contain high concentrations of nitrogen and chloride which may be potentially hazardous to biological treatment processes.

PROCESS FLOW	
liter/kkg	269,000
gal/M lb	32,200
BOD5 RWL	
mg/liter[1]	61
kg/kkg[2]	16

FIGURE 4-38

ORTHO-NITROANILINE—AMMONOLYSIS OF ORTHONITROCHLOROBENZENE

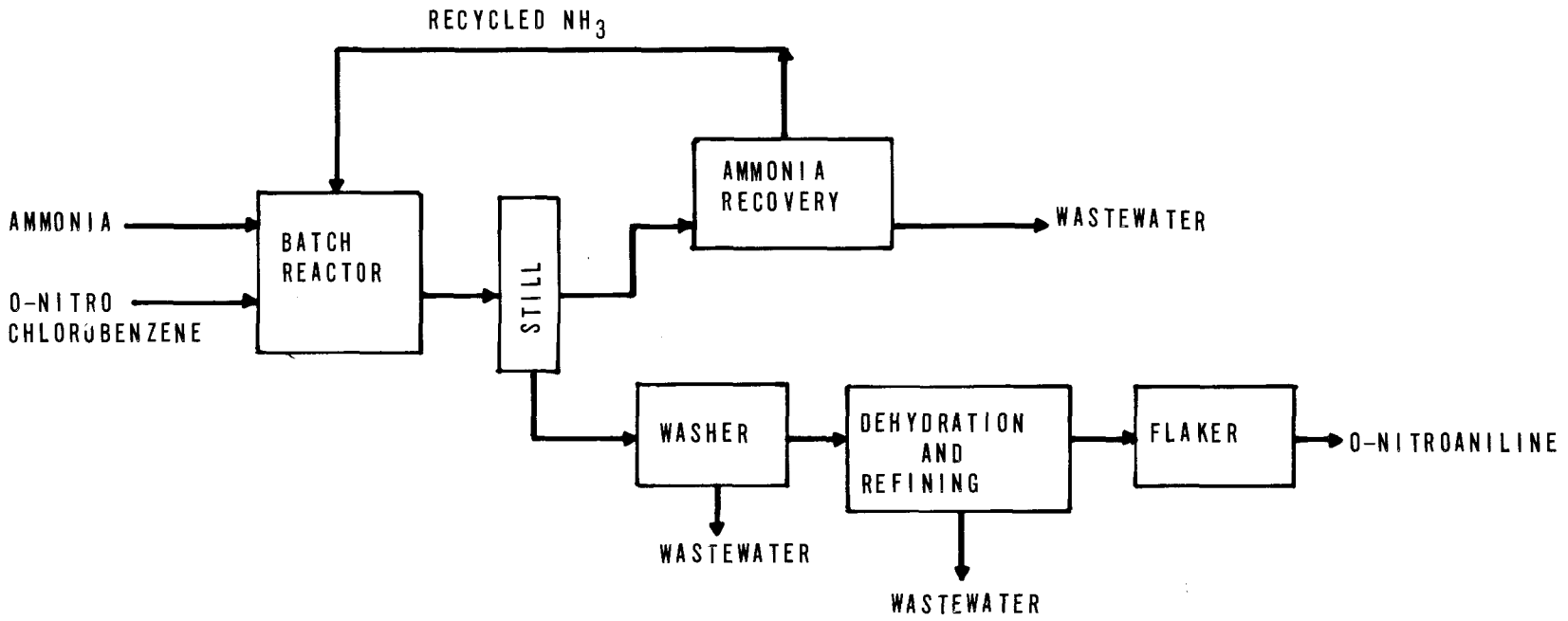

COD RWL	
mg/liter[1]	391
kg/kkg[2]	105
TOC RWL	
mg/liter[1]	115
kg/kkg[2]	30.9

[1]Raw waste concentrations are based on unit weight of pollutant per unit volume of process waste waters.
[2]Raw waste loadings are based on unit weight of pollutant per 1000 unit weights of products.

Product: p-Nitroaniline (PNA)

Process: Ammonolysis of p-Nitrochlorobenzene

Process RWL Subcategory: D

Chemical Reactions:

$$NO_2C_6H_4Cl + NH_3 \text{ (excess)} \xrightarrow{H_2O} NO_2C_6H_4NH_2 + NH_4Cl$$

Ammonia

p-nitrochlorobenzene p-nitroaniline ammonium chloride

p-Nitroaniline is an important intermediate for dyes and pigments and also for the preparation of numerous antioxidants and antiozonants of the N-substituted p-phenylenediamine type.

A typical process flow diagram for batchwise manufacturing of p-nitroaniline is shown in Figure 4-39.

p-Nitroaniline is manufactured by heating p-nitrochlorobenzene with aqueous ammonia at 175°C under pressure. A jacketed autoclave, provided with efficient stirrers, is used as the reactor. Molten p-nitrochlorobenzene is added to aqueous ammonia (28 percent) and heated gradually. The temperature is increased over a period of 3 hours to 175°C at a pressure of 530-580 psi, and these latter conditions are maintained for 16 hours to complete the reaction.

Some of the ammonia gas is then vented to an absorption system. The excess ammonia in the reaction mixture is also distilled off to absorbers, from which it is recycled back to the reactor. The aqueous reaction mixture is passed through a pressure filter and sent to wooden crystallizing tubs, where the p-nitroaniline separates as a finely divided, canary yellow crystalline mass. After cooling to 30°C, the solid product (averaging 99 percent purity) is removed by centrifuging. The centrate passes through an elaborate system of catch boxes to cool it to room temperature, and additional product settles out. This is recovered periodically by siphoning the water from the catch boxes.

The solid cake leaving the centrifuge is then passed through drying and packaging steps. Dust collectors and scrubbers

FIGURE 4-39

PARA-NITRO ANILINE—AMMONOLYSIS OF PARA - NITROCHLOROBENZENE

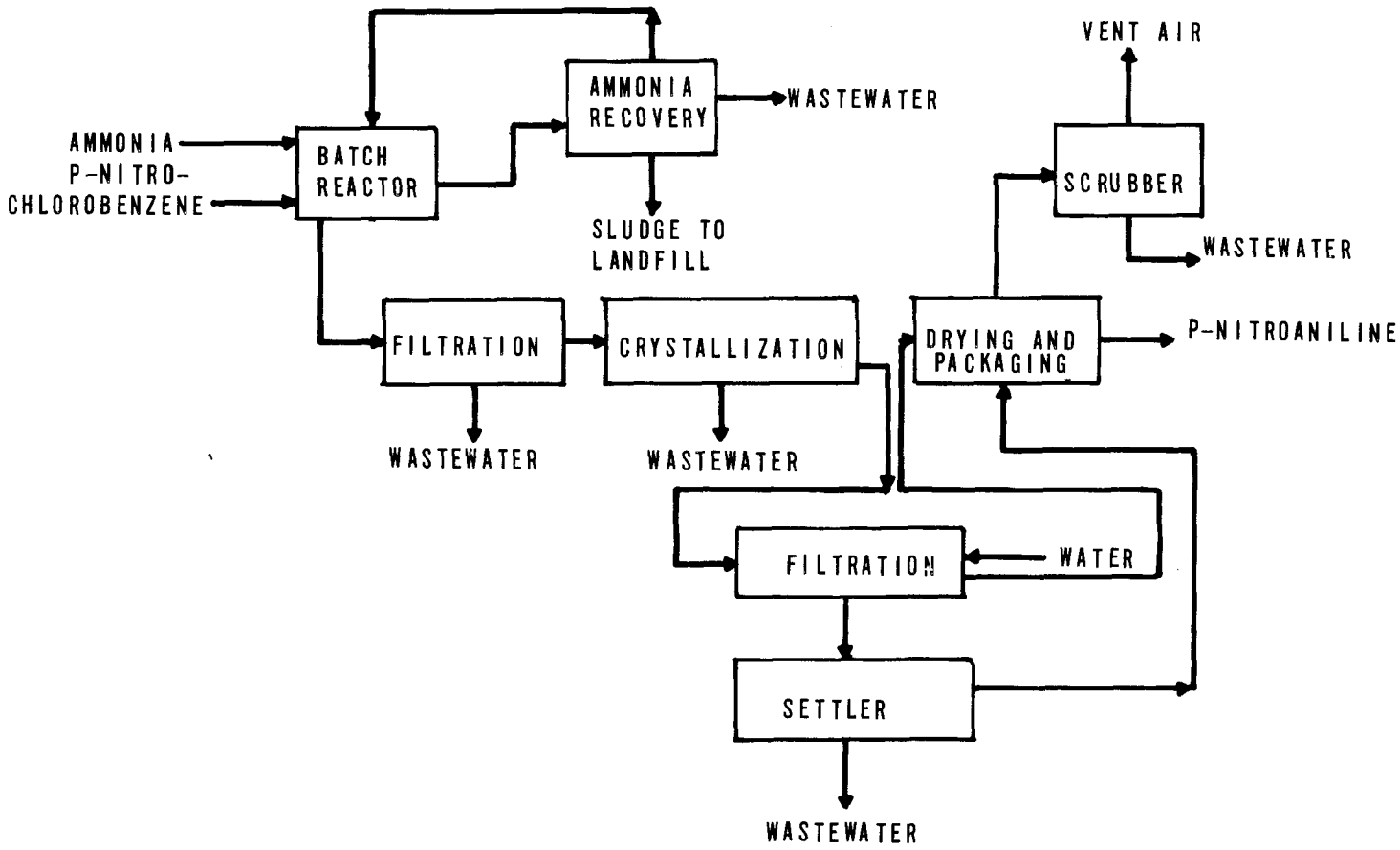

are used in the drying steps to remove the dust in the vent gases.

The major pollution sources of this process are waste waters withdrawn from scrubbers, filtration units, and the crystallization unit. Process RWL's calculated from flow measurements and analyses of the waste water streams obtained in the survey period are shown in the following tabulation. The analytical results also indicate that, in addition to the parameters shown in the tabulation, pollution parameters such as nitrogen, chloride and calcium may be at levels potentially hazardous to biological treatment processes.

PROCESS FLOW	
liter/kkg	39,100
gal/M lb	4,680
BOD5 RWL	
mg/liter[1]	65
kg/kkg[2]	2.55
COD RWL	
mg/liter[1]	2,030
kg/kkg[2]	79.1
TOC RWL	
mg/liter[1]	570
kg/kkg[2]	22.2

[1]Raw waste concentrations are based on unit weight of pollutant per unit volume of process waste waters.
[2]Raw waste loading are based on unit weight of pollutant per 1000 unit weights of product.

These data are the basis for BPCTCA.

Continuous processes can also be employed for ammonolysis of p-nitrochlorobenzene. In such a process, preheated aqueous ammonia is forced through an inlet pipe to the bottom of the vertical reaction cylinder, then passes upward through an annular space, and overflows through a central outlet pipe leading to a still, where excess ammonia is stripped off before the product is crystallized. The space above the overflow pipe provides a vapor space to absorb fluctuations in the internal pressure. The lower part of the cylinder, where the major part of the reaction occurs, is provided with packing and is constructed of stainless steel to minimize corrosion. The operating pressure is about 1200 psi.

Product: Pentachlorophenol

Process: Chlorination of Phenol

Process RWL Subcategory: D

Chemical Reaction:

$$C_6H_5OH + 5Cl_2 \rightarrow C_6Cl_5OH + 5HCl$$

Pentachlorophenol is widely used as a wood preservative, especially in such applications as residential construction where creosote would be undesirable. It is also used as a fungicide in paint and adhesives, and in paper mills.

Although pentachlorophenol can be manufactured by continuous processes, it is generally produced by batch reaction as in the facility visited during the survey period. A simplified process flow diagram for the production of pentachlorophenol via the chlorination of phenol is shown in Figure 4-40.

Phenol and chlorine are fed to the reactor where the chlorination reaction occurs. The product of the first step of the reaction is trichlorophenol, which is further chlorinated to form pentachlorophenol.

The product mixture leaving the second reactor is discharged into a quench vessel, in which the gases are separated from the molten product stream. The gases proceed to the HCl absorber and caustic scrubber, while the liquid stream is solidified in a flaker. The solidified pentachlorophenol is then passed into a rotary kiln for glazing.

The major water pollution sources of this process are the waste streams generated at the caustic scrubber, flaker, and glazing units. Process RWL's calculated from flow measurements and analyses of the samples obtained in the survey period are shown in the following tabulation.

	Sampling Period #1	Sampling Period #2
PROCESS FLOW		
liter/kkg	2,960	2,960
gal/M lb	354	354
BOD5 RWL		
mg/liter[1]	330	306

FIGURE 4-40
PENTACHLOROPHENOL- CHLORINATION OF PHENOL

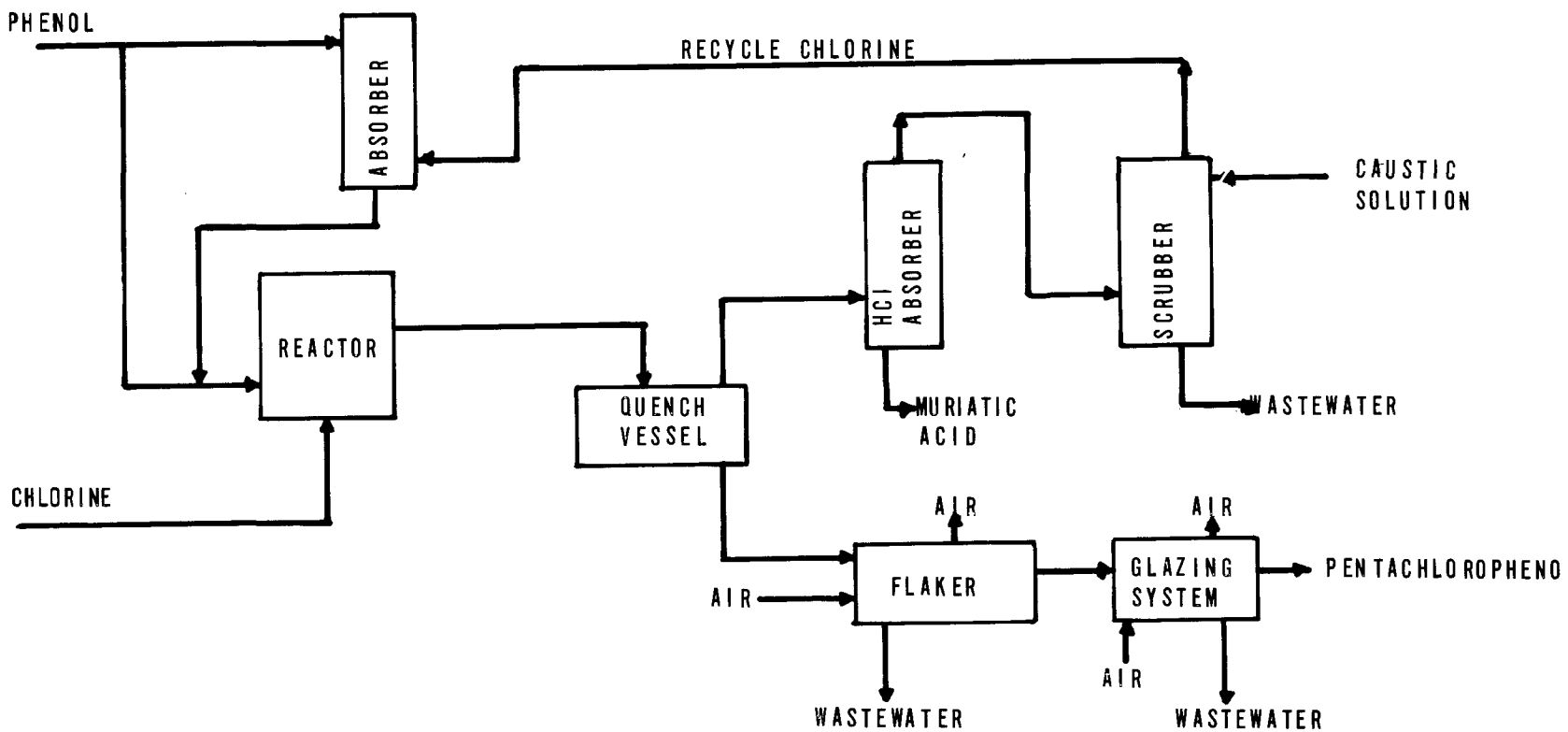

kg/kkg[2]	0.975	0.906
COD RWL		
mg/liter[1]	5,740	6,020
kg/kkg[2]	17	17.9
TOC RWL		
mg/liter[1]	768	781
kg/kkg[2]	2.27	2.31

[1]Raw waste concentrations are based on unit weight of pollutant per unit volume of process waste waters.
[2]Raw waste loadings are based on unit weight of pollutant per one thousand unit weight of product.

The analytical results also indicate that parameters such as chloride, phenol, and sulfate may be at levels potentially hazardous to biological treatment processes.

The demand for pentachlorophenol in the U.S. is approximately 40 million pounds per year, of which 15 million pounds are used in mixtures with creosote. Pentachlorophenol can also be made by caustic fusion of hexachlorobenzene, which is currently a cheapter route but gives a product contaminated with NaCl.

Products: Fatty Acids and Primary Derivatives

Process RWL Subcategory: D

Fatty acids are organic acids characterized by a straight chain carbon structure terminating in a single carboxyl group. The carbon structure may contain only saturated carbon atoms or may contain one or more double bonds.

In general, the saturated acids having 12 to 18 carbon atoms are of major commercial concern. Their uses tend to reflect their stability or lack of easy reactivity at any point along the chain except at the carboxyl position. Saturated acids, including those saturated by hydrogenation, comprise about one-third of all fatty acids commercially produced.

Acids of reduced hydrogen content, having one or more double bonds between carbon atoms along the chain, constitute the other main fatty acid family of significant commercial importance. The unsaturated acids of the ethylenic family are made up of a number of separate series of the following compositions:

$C_nH_{2n-2}O_2$	(monoethenoic)
$C_nH_{2n-4}O_2$	(diethenoic)
$C_nH_{2n-6}O_2$	(triethenoic)

The chemical reactivity and utility of unsaturated fatty acids in various polymeric or "drying" reactions is determined in part by the number of double bonds along the carbon chain. These double bonds also introduce different properties arising from the location along the chain, i.e. conjugated and nonconjugated fatty acids. A different structure also results from a reversed positioning of those parts of the molecule on either side of the double bond, known as cis and trans isomerism.

To avoid confusion of terms, it is necessary to distinguish between fatty acids as defined by the organic chemist and fatty acids as commercially produced and sold. The term "stearic acid" is an example of this confusion.

Here the commercial product name has priority, going back to the splitting of tallow for the manufacture of hard, high-melting candles, before individual acids of definite composition had been isolated or identified.

Historically, commercial stearic acid has been a crystalline combination of the chemist's palmitic and stearic acids in a

55 to 45% ratio, respectively, with some small percentage of unsaturated acids. This ratio is that which naturally occurred in the mixed acid derived from splitting tallow, after most of the liquid acids were removed by the original pressing method. The liquid acids so removed were known as oleic acid, or red oil.

Other commercial acids have been identified by origin - for instance, coconut fatty acid or cottonseed fatty acid - in terms reflecting the characteristic ratio in which the component acids exist when released from the glycerides of these oils. Fractionation to separate or to enrich the wanted acids, however, has made identification by origin obsolete as a means of characterizing many of today's acids. Blends and "cuts" are offered to meet particular market demands, such as drying characteristics in paint films. Composition expressed in terms of component acids as the chemist defines them is now finding its way more and more into product descriptions and specifications.

Table 4-3 lists 15 of the most important commercial fatty acids, along with their composition in terms of specific constituent acids.

In addition to the saturated and unsaturated acids, primary derivatives based upon these acids modified by amination, esterification, ozonation, and polymerization are considered within the context of this study. Also, the processing associated with the recovery and purification of by-product glycerine is considered. The relation between glycerine and fatty acid production will become apparent during subsequent discussion. However, at this point it is noted that the production of other products (such as soaps) from fatty acids is not considered within the context of this subcategory.

Raw materials for the production of fatty acids fall into three groups:

1. Tall oil derived from Kraft papermaking.
2. Animal tallow and grease.
3. Vegetable oils and soap stocks.

As a raw material for fatty acid production, crude tall oil ranks first in volume. Crude tall oil is a mixture of rosin acids and free fatty acids (in addition to a large percentage of water and impurities) and is a by-product of kraft papermaking. Most of the crude tall oil is fractionated, and the separated rosin acids and tall oil fatty acids are sold directly to consumers after

TABLE 4-3

Some Examples of Commercial Fatty Acids Showing Typical Percentage of Constituent Acids

Typical commercial fatty acids		Caproic	Capylic	Capric	Lauric	Myristic	Palmitic	Stearic	Arachidic	Behenic	Oleic	Linoleic	Linolenic
	C-atoms	6	8	10	12	14	16	18	20	22	18	18	18
	Double bonds	0	0	0	0	0	0	0	0	0	1	2	3
Stearic acid (T.P. type)							50	48					
Stearic acid (S.P. type)						1	51	43			6		
High palmitic							75	20			5		
Solid fatty acid (Hydrogenated tallow type)						2	35	59			4		
Solid fatty acid (Hydrogenated vegetable type)						1	29	68			2		
Solid fatty acid (Hydrogenated fish type)						10	35	28	15	10	2		
High lauric acid (Distilled coconut)			1	7	49	17	9	2			6	2	
Oleic acid (red oil) (Distilled)						2	7	2			79	10	
Oleic acid (Multiple distilled)						3	5	1			85	6	
Animal fatty acid (Distilled)						4	25	15			50	4	2
Vegetable fatty acid (Distilled cottonseed)						1	24	2			33	39	1
Vegetable fatty acid (Distilled soybean							11	4			29	51	5
Vegetable fatty acid (Fractionated soybean)											39	60	1
Tall oil fatty acid							2				51	47	
Distilled linseed fatty acid							6	3			19	24	47

purification. The fatty acids derived directly from tall oil can be used in the manufacture of primary derivatives such as dimers, polyamides, nitriles, primary amines, di-fatty tertiary amines, and fatty quatenary ammonium chloride. The major constituents of tall oil fatty acid are oleic acid and linolenic acid which contain two and three double bonds respectively (see Table 4-3). It should be noted that the production of tall oil fatty acid involves only distillation of free acids and is simpler than the processes used to manufacture fatty acids from animal and vegetable sources.

There are four main types of animal fats: edible tallow, inedible tallow, lard and inedible grease. Inedible tallow and grease are important raw materials as a primary source of stearic and oleic acids. These materials are supplied to fatty acid manufacturers from meat packing and rendering plants. It should be noted that fatty acid production is a relatively small part of the tallow market, with the major end use of tallow being in the production of soap.

Coconut oil (obtained by crushing coconuts) is an important vegetable raw material for fatty acid and fatty ester production, because of its high C8, C10, and C12content. Although soybean and cottonseed oil are produced in large quantities, they are not often used for fatty acid manufacture because of their high costs. However, by-products from the refining of these oils for other end uses are used in the manufacture of fatty acids. These by-products are called "soap stocks" or "foots" and vary in composition, depending on the refining process by which they are produced.

It should be noted that fatty acids are present in animal and vegetable sources as glycerides. Tall oil, which is not a glyceride, is the only raw material which contains high concentrations of free fatty acids. The three-pronged glycerol linkage, typical of all fats, must be severed in the production of all fatty acids derived from animal and vegetable sources. The chemical reaction for this cleavage involves the following hydrolysis:

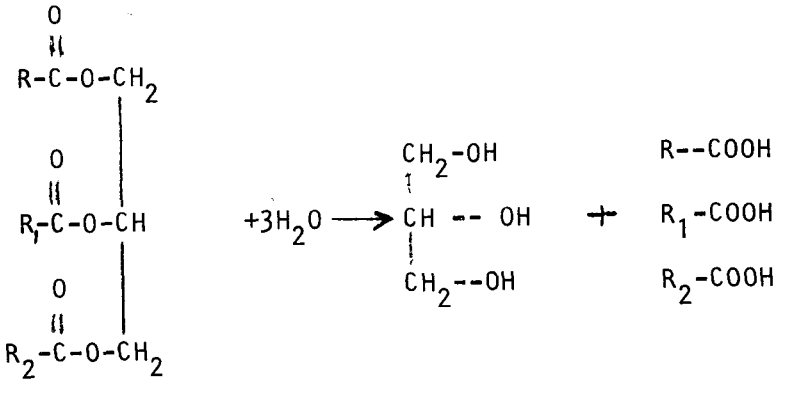

Fat (triglyceride) Glycerine Fatty acids

The products of the reaction are crude glycerine and fatty acids.

Depending upon the nature of the feedstock and the desired end-product fatty acids, different combinations of the following processing steps may be found in a fatty acid plant:

1. Pretreatment for Purification of Feedstock
2. Saponification/Acidulation of Feed or Products
3. Hydrogenation of Feed or Product Acids
4. Hydrolysis of Feed (Fat Splitting)
5. Distillation of Product Acids
6. Distillation for Glycerine Recovery
7. Separation of Saturated and Unsaturated Acids

The following paragraphs briefly describe each of these processing steps. A generalized process flow diagram showing their interrelation is presented in Figure 4-41.

Pretreatment

Many of the impurities present in the feedstock will decompose, volatilize, or contaminate the product acids and must be removed. Water-soluble salts will deposit on heating surfaces. Mineral acid will attack the fatty acid upon heating and attack the equipment as well. Water-washing and drying of feedstock containing these impurities are essential.

Feedstock containing gums, proteinaceous material, calcium, and iron soaps should also be acid-washed. Acid-washing is generally performed in lead- or monel-lined tanks. A common method is to treat a charge of melted fat at about 60°C with 2 to 4% sulfuric acid in a fairly concentrated (30 to 50%) solution, with good agitation for about 1 hr. The charge is then heated to 90°C with open steam. After settling, the acid water is drawn off, and the charge is washed with water to remove the mineral acid. Acid-washing breaks up calcium and iron soaps that act as catalysts forming ketones or remain as soap in still bottoms. Sulfuric acid removes proteins and other organic impurities.

Acid-washing also removes impurities that hinder hydrolysis. Bleaching with acid clays is effective in removing oxidized acids and impurities that hinder splitting and/or hydrogenation.

Saponification/Acidulation

FIGURE 4-41

GENERALIZED PROCESS FLOW DIAGRAM ILLUSTRATING THE MANUFACTURE OF FATTY ACIDS FROM GLYCERIDE FEEDSTOCKS

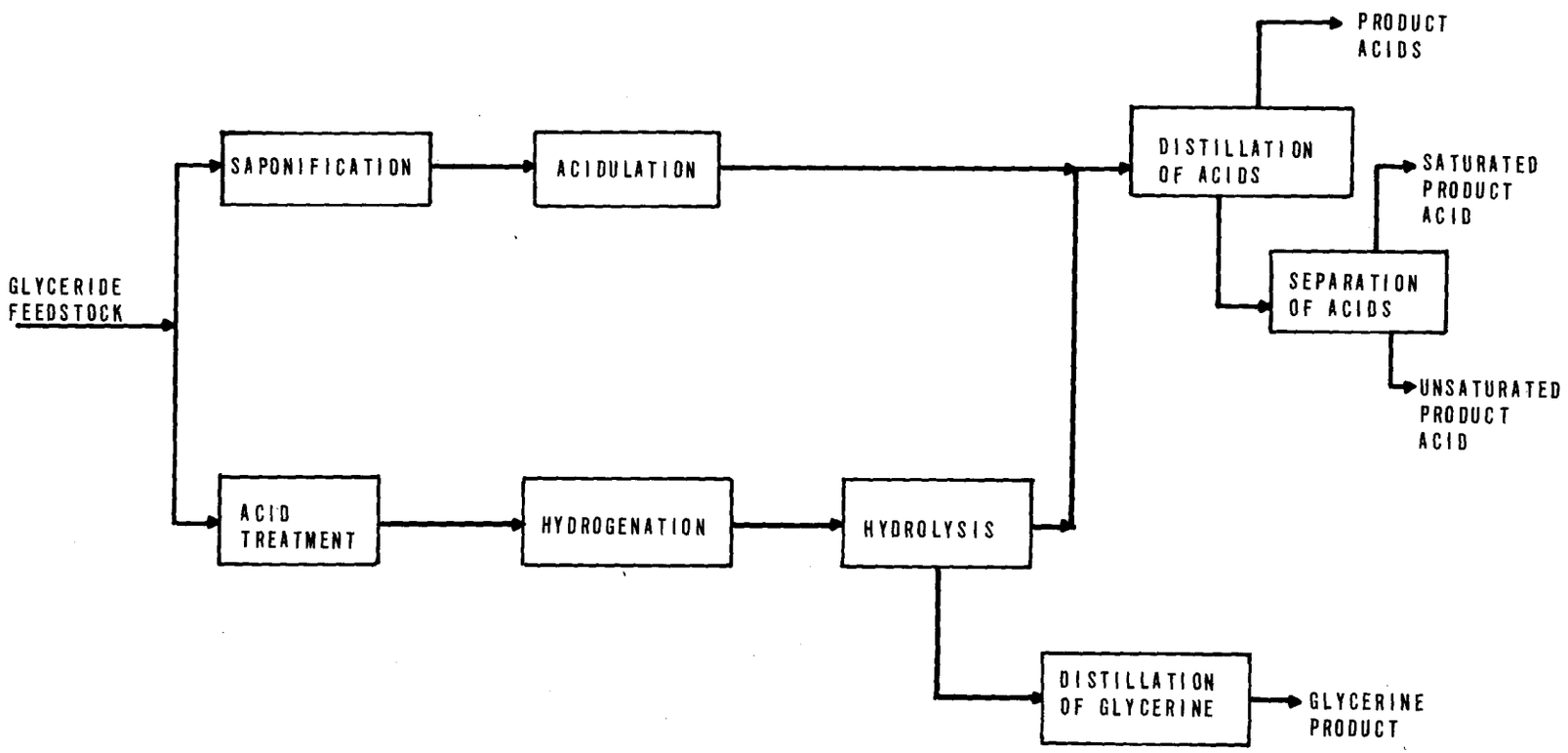

In special cases where feedstock is the by-product "soap stock" or "foots" produced in the caustic refining of vegetable oils, the saponification of the feed followed by acidulation is a convenient means of manufacturing fatty acids. It has an advantage in the handling of raw refinery foots because very little additional caustic soda is required to complete the saponification prior to the acid treatment. Completely saponified foots upon acidulation yield raw material satisfactory for distillation. Although more expensive than the other methods using water, it gives practically 100% conversion and avoids the use of high temperatures. The splitting of fatty acids from waxes and sperm oil is done by complete saponification, using anhydrous alkali, followed by steam distillation to remove the high molecular weight alcohols. Subsequent splitting of the soap is performed with sulfuric acid.

Hydrogenation

Hydrogenation is the process of adding hydrogen to materials that are deficient in hydrogen, e.g. oleic acid, which requires one molecule of hydrogen to form the C18 saturated acid. Either the glyceride or the fatty acid can be hydrogenated. The process is essentially the same, with the exception that the acid must be processed in a corrosion-resistant apparatus, usually stainless steel.

Refined oils, fats and fatty acids that have been properly distilled are hydrogenated with little difficulty. Impure materials or mixtures of fatty acids and neutral oil, such as acidulated foots, are hydrogenated only after they have been specially treated, and then usually with difficulty.

Hydrogen addition to the unsaturated groups occurs only by means of a catalyst. Reduced nickel, the usual hydrogenation catalyst, is made by reducing nickel salts, i.e., formate, carbonate, or the aluminum nickel alloy.

Hydrogenation is done in both batch and continuous processes. The batch process, which is older and not as generally used today, uses a vessel that is equipped with a top-entering agitator and a system for heating and cooling. It is built to operate at pressures of from 25 to 250 psi (in some instances up to 500 psi and higher). The nickel catalyst is added to the pre-dried charge in amounts varying from about 0.05 to 0.5%. The vessel is purged several times with hydrogen and then brought up to reaction temperature with steam. Once reaction starts, however, it is exothermic, and cooling is required to prevent overheating of the catalyst and stock. The exothermic heat is

significant with the absorption of 1 lb-mole of hydrogen releasing about 40,000 Btu, and requires substantial cooling surface as well as good agitation. Good agitation is also required to keep replenishing the reaction with hydrogen gas. Reactors in use today vary in size from those holding a few pounds to large ones holding 50,000 lbs.

Continuous methods for the hydrogenation of all classes of chemicals have been developed in recent years, especially in connection with petrochemicals and for petroleum processing in general. The fat and fatty acid industries have been much slower in developing and using continuous methods, owing perhaps to the wide variety of products produced, the relatively smaller volumes, and the need for modifying the product by partial and selective hydrogen addition.

Hydrolysis

Hydrolysis or splitting is the process of reacting the fat with water to form glycerine and fatty acid. A series of three hydrolysis steps is required to obtain free acid and free glycerine. It is believed that the reactions are homogeneous taking place mainly in the fat phase, as the solubility of water in fat is greater than the solubility of fat in water.

It is necessary only to mix fat with water to cause some hydrolysis, but the reaction is very slow. However, when sulfuric acid is added to fat, the sulfonated products formed increase the solubility of water in fat, and hydrolysis takes place at a faster rate. Solubility is further increased by the use of an alkaline catalyst, i.e., zinc oxide, magnesium hydroxide, or calcium oxide.

A major development in hydrolysis techniques was made by Twitchell, who developed the sulfonic acid catalyst bearing his name. Since the solubility of water in fat increases very rapidly at high temperature, high-pressure autoclaves, both of the batch and continuous type, have been developed.

Commercial fat splitting is carried out by several processes, each of which has advantages and disadvantages. The selection depends upon the type of raw material, size of the operation, and the number of different kinds of raw materials handled.

A. Twitchell Process

The Twitchell process, developed in 1890, is still used to some extent in the United States. It is carried out

in a lead- or monel-lined tank at atmospheric pressure. The charge consists of fat mixed with about 50 wt.% water, 1% sulfonic acid catalyst, and 0.5% sulfuric acid. The mixture is then boiled with open steam for 16 to 24 hrs, allowed to settle, and the sweet water is drawn off and replaced with fresh water. The boiling is continued until a split of about 95% is reached. The overall split depends upon the glycerol concentration of the sweet water.

By countercurrent use of water, it is possible to obtain high splits and high concentrations of sweet water, usually 10 to 15%. The advantages of the Twitchell operation are its relatively simple equipment and the use of low temperatures. Low-temperature operation is highly desirable for splitting stocks containing multiple unsaturation. Disadvantages are the length of time required, high steam consumption, and poisoning of the catalyst, which necessitate the pretreatment of most stocks, especially the lower grade variety.

B. Batch Autoclave

Batch autoclaving is a very old method, which, as originally developed, used a closed cylindrical pressure vessel with agitation provided by open-steam injection to a continuous vent. Typical temperatures are about 185°C, equal to about 150 psi. About 2% lime, zinc oxide, and so forth are used. The amount of water is about 50 wt.% of the fat. The degree of split reaches an equilibrium at about 90%. To obtain a higher split, the glycerine water must be replaced with fresh water.

This catalytic autoclave process is suitable for all types of fats and has the advantage over the Twitchell process of a shorter reaction period and the production of lighter colored fatty acid because of the absence of air. A more recent development in autoclave splitting is the use of higher temperatures and higher pressures requiring no catalyst. This process is usually carried out using mechanical agitation, with the temperature held at about 238°C under a pressure of 450 psi. Splitting is rapid, and there is no catalyst to remove. Its disadvantage is the effect of high temperature on stocks having a high degree of unsaturation.

C. Continuous Countercurrent Splitting

Over the past 30 years, several companies have designed and built successful continuous hydrolyzers which have

replaced the older methods. Fat enters near the base of the hydrolyzer and passes upward through the column and exits through a pipe near the top. Steam from the high-pressure steam boiler, at 750 psi, is injected at two locations, the top addition into a water-distributing tray and the lower addition through a sparger pipe near the fat-water interface.

The fat rises slowly through the column in a continuous phase while the water drips through it, constantly replacing the glycerine-laden water that is in solution in the fat. At the bottom of the tower, the glycerine water collects and is removed continuously to maintain a constant interface level near the base of the tower.

The fatty acid leaves the top of the tower through a pressure control valve set to maintain about 720 psi, sufficiently high to prevent vaporization of water at the required operating temperature, usually about 250 to 260°C.

The fat must be under pressure for about 2 hrs to reach a split of 96 to 99%. The reaction time required may vary, depending upon the type of fat and quantity of water used. It is usual practice to remove sweet water with a concentration between 12 to 20% glycerine.

Continuous splitting has the advantage of yielding high splits and more concentrated glycerine solutions than any other process. It has a high capacity and short reaction time. It requires less room, less process inventory, and less labor. It does, however, restrict flexibility in changing stocks. The high temperatures, as mentioned above, have the advantage of speeding up the hydrolysis reaction; however, it has a real disadvantage when handling highly unsaturated fat, such as fish oil, because these oils tend to polymerize.

Recovery and Purification of Glycerine

The dilute (10-20 wt.%) glycerine solution ("sweet water") may be concentrated by taking water overhead in an evaporator or distillation column. In most operations, non-contact steam is used to drive off the water to an approximate 80% glycerine concentration. The noncontact steam may be condensed and used in the hydrolysis reactor. The separated water vapor and some glycerine are normally condensed in a barometric condenser and discharged. Additional treatment steps for purification of glycerine

water may include filtration, ion exchange, and activated carbon adsorption.

Distillation

Distillation as a means of purifying fatty acids has been in use for the better part of a century. It is an economical and successful method of producing high-purity fatty acids. It is beset with many problems because fatty acids have high boiling points and decompose when held at elevated temperatures. The early distillers soon discovered that processing temperatures must be held at about 250°C maximum to limit decomposition. At higher temperatures, fatty acids first lose water, forming anhydrides, and later, under continued heating, break down into ketones and hydrocarbons. Unsaturated fatty acids polymerize, forming dimers, trimers, and so forth.

The early stills were operated at atmospheric pressure and large quantities of injected steam were used to maintain the temperature at 250°C. As better equipment became available, the stills were operated at lower and lower pressures until today most fatty acid stills operate at pressures of between 5 and 50 mm Hg abs. At low pressures, fatty acids will distill without injected steam, but it is usually desirable to use some injected steam because even a small amount will aid in preventing the formation of anhydrides. When stills are operated at pressures lower than the vapor pressure of the available cooling water, it is necessary to provide a steam compressor in addition to the ordinary air pumps to maintain desired operating pressures.

Fatty acid stills now in general use may be classified into three general types: 1) those for semicontinuous batch operation; 2) those for continuous simple distillation; and 3) those for continuous fractional distillation. If only a decolorizing step is necessary (one that removes the unhydrolyzed oil, polymers, and high-boiling color bodies), a simple distillation will produce satisfactory results. If considerable amounts of color bodies (low-boiling unsaponifiable matter and compounds that cause color reversion) are present, some means of fractionally concentrating these "low boilers", either by fractional distillation or fractional condensation, is required. If the component acids must be separated, an efficient fractionating still is necessary.

Separation Processes

Separation of tallow fatty acids into solid (saturated) and liquid (unsaturated) components cannot be accomplished by the fractionation methods previously described because major components have the same chain length and an insignificant difference in molecular weight. Two major separation processes have achieved commercial significance in the separation of solid saturated acids from liquid unsaturated acids, namely, the panning and pressing method and solvent crystallization.

The panning and pressing process at one time accounted for a major portion of the total production of stearic and oleic acids. The idea of pressing liquid fatty acids from solid fatty acids probably occurred from observing the production of lard oil. In fact, equipment used for the pressing of grease to yield lard oil was initially used for the separation of fatty acids. This method is used for the separation of animal fatty acids to produce commercial stearic and oleic acids. Simply, this method involves the crystallization of solid or saturated fatty acids in a solvent of liquid or unsaturated fatty acids. Consequently, the solid (saturated) fatty acids must exhibit a reasonably good crystal formation so that the liquid acids may be easily and efficiently expressed.

In the production of commercial stearic acid, the optimum crystal structure is attained when the saturated acids of the fatty acid mixture have a composition of 55% palmitic acid and 45% stearic acid. Limited variation in this ratio may be tolerated in actual practice, but the variation in normal animal fats is sufficient so that blending is necessary to secure a proper crystalline structure. Fatty acid mixtures of a noncrystalline structure may be partially separated by the pressing method.

In the panning and pressing operation, properly prepared melted fatty acids are cascaded into rectangular aluminum trays, which are stacked in racks in cold-storage rooms. Cooling takes place very slowly to assure the formation of large and well-defined crystals. Cooling by mechanical refrigeration to a final temperature of 180°C is attained in a cold-storage room in about 6 to 8 hrs. The solidified cakes of fatty acids are removed from the trays, wrapped in burlap or cotton cloths, and stacked in vertical hydraulic presses. Metal sheet separators are placed between every two layers of wrapped cakes to serve as stabilizers to conduct the expressed oleic acid to a trough at the edge of the press. Pressure is very slowly applied to the stack of

cakes until a maximum of approximately 3,000 psi is attained. The expressed oleic acid amounts to about 50 to 60% of the original fatty acids. Depending upon the temperature of the cakes of fatty acid during pressing, the titer of the oleic acid will range from 6 to 10°C.

The pressed cake, now referred to as "cold pressed cake", is melted, again cascaded into racks of aluminum trays in an open room, and allowed to solidify at room temperature. The solidified cake is placed in hair mat slings suspended between steam-heated hollow metal plates in a horizontal ram press. Application of pressure and heat removes most of the oleic acid along with a small portion of the solid acids, resulting in a mixture of fatty acids known as "hot press oil". The pressed cake from this "hot pressing operation" is called "double-pressed" stearic acid. It contains about 5 to 8% oleic acid and has a titer of approximately 54 to 55°C. In much the same manner "triple-pressed" acid is produced with the additional production of hot press oil. Triple-pressed stearic acid contains from 1 to 3% oleic acid and has a titer of approximately 55 to 56°C. The hot press oil has a composition of saturated and unsaturated acids similar to the feedstock and is therefore mixed with the incoming fatty acid feed. As a result, about 40% of the fatty acids in this process is being recycled.

The panning and pressing method is gradually being replaced by the newer solvent methods, as has countercurrent extraction by immiscible solvents.

Solvent processes utilizing a liquid-liquid extraction method have been proposed, but the solubility of mixed fatty acids in solvents results in an inefficient separation. This has limited the commercial use of these methods.

Separation methods involving the crystallization of one-component fatty acids from a solvent solution of a mixture of fatty acids eliminate, to a large extent, the effect of mutual solubility. Solvent crystallization methods may be applied to the separation of most fatty acid mixtures, provided the component acids can be selectively removed in a solid state, from a solvent solution of the mixture.

Of the many solvent crystallization separation methods proposed, the Emersol Process is most commonly employed. This process involves the controlled crystallization of fatty acids from a polar solvent to achieve a separation of solid fatty acids from liquid fatty acids. Separation of saturated acids or of triglycerides may also be accomplished. One of the best illustrations of the

application of this process is in the separation of animal fatty acids to yield commercial stearic acid and oleic acid.

Animal fatty acids are dissolved in 90% methanol to yield a 25 to 30% concentration. The methanol solution of the fatty acids is pumped continuously to a multitubular crystallizer fitted with agitator scraper blades and cooled to about -15°C. Cooling is accomplished by circulating refrigerated methanol through the jackets of the crystallizer tubes. During chilling the solid fatty acids crystallize from the solvent solution to form a slurry that is fed to a rotary vacuum filter. The solid acids filter to form a cake that is continuously washed with fresh 90% methanol and then discharged from the filter. This filter cake containing approximately 40 to 60% methanol is melted and pumped to a solvent recovery still in which the solvent is removed from the fatty acids and returned to the system. The solid acids are discharged from the still ready for finishing and packaging operations into commercial stearic acid.

The filtrate containing the liquid acids is passed through a heat exchanger to a solvent recovery still. The discharged liquid acids from the still are ready for finishing and packaging into commercial oleic acid. Reported capacities of the Emersol units range from 2000 to 5000 lbs of fatty acids per hour. At present, there are seven units in operation in the United States, Great Britain, Holland, and Australia.

Certain other separation methods, although not yet commercial, have interesting possibilities. A solvent crystallization process for separating tallow fatty acids using hexane as a solvent has been employed. Much has been published on the separation of fatty acid mixtures by use of urea or thiourea complexes. Urea or thiourea adducts or complexes of fatty acids have varying degrees of stability, depending on the carbon chain length and configuration of the molecule. This difference in adduct stability is the basis for obtaining a separation of the fatty acids.

Recovery of Fatty Acids from Tall Oil

When nonglyceride feedstocks such as tall oil are used, a different process from that shown in Figure 4-41 must be used.

In the production of tall oil fatty acids and rosin by fractional distillation, crude tall oil is passed through a vaporizer into a fractionating column where the volatile rosin and fatty acids are separated from higher-boiling and

nonvolatile impurities, which are drawn off as pitch. The vapor enters the fractionation column and is separated into three fractions: 1) rosin that is taken off at the bottom of the column, 2) a fatty acid containing from 1 to 5% rosin near the top of the column, and 3) a heads fraction overhead, containing a high percentage of low-boiling fatty acids (mainly palmitic), unsaponifiables, and color bodies. The fatty acid fraction is then passed into a third column where it is further stripped of rosin, unsaponifiables, and color and odor bodies to yield a product with a rosin content of 0.3 to 2.0% and unsaponifiables content of 0.3 to 1.5%. The fraction containing 25 to 35% rosin, taken off at the bottom of this column, is either sold as such or refractionated. By taking fatty acids off at the second column or at various points on the third column, the rosin content of the fatty acids can be varied.

The fractionation of tall oil presents a number of problems. Both the fatty acids and the rosin have low vapor pressures and are subject to decomposition on heating. Either very high vacuum or vacuum with the addition of superheated steam is needed to keep the temperature low enough to prevent damage to the products. Overheating must be prevented during vaporization by creating high flow velocities in heaters and vaporizers, and entrainment must also be prevented. The equipment is, therefore, specifically designed for the purpose. Various types of fractionating trays, grid trays, sieve trays, and bubble-cap trays are used; all of them have certain advantages and disadvantages and unless they are carefully chosen and designed for the purpose, will fail to produce the desired results.

Different operating schemes are used by the various producers, employing single and multiple tower system. A two-tower system can produce excellent results by refractionating the fatty acids. This raises the operating cost but the investment cost for the plant is lower.

For the purposes of this study, the previously described unit operations and chemical conversions are defined to be the basic steps necessary to produce fatty acids. Field sampling was used to establish raw waste loads for plants encompassing these steps. Because of the batch or semi-continuous nature of the operations, it was not possible to break out the total RWL according to individual step sources. Rather, combined waste streams from the acid production areas were sampled in most cases. A total of 6 plants were sampled. Table 4-4 indicates the specific operations relating to acid and derivatives production. Table 4-5 summarizes the RWL data related to acid production

TABLE 4-4

CHEMICAL CONVERSIONS AND UNIT OPERATIONS CONTRIBUTING TO PROCESS RAW WASTE LOADS FOR THE MANUFACTURE OF FATTY ACIDS AND PRIMARY DERIVATIVES (BASED ON PLANTS SURVEYED)

Plant 1

Acid Production

1. Acid Washing
2. High Pressure Fat Splitting
3. Glycerine Recovery and Purification
4. Solvent Separation of Fatty Acids
5. Hydrogenation of Fatty Acids

Derivatives

1. Dimerization & Trimerization[1]
2. Ozonation
3. Esterification
4. Ammination

[1] Wastewater included with acid product.

Plant 2

Acid Production

1. Pretreat. by Filt. and Acid Wash
2. Hydrogenation of Tallow
3. Hydrolysis by Twitchell Proc.
4. Glycerine Recovery
5. Distillation of Fatty Acids
6. Separation of Acids by Pressing

Plant 3

Acid Production

1. Saponification
2. Acidulation
3. Hydrogenation
4. Fat Splitting
5. Glycerine Recovery (b)
6. Distillation

(b) Wastewater from Glycerine Recovery Sampled Separately.

Derivatives

1. Esterification (c)
2. Ammination (c)

(c) Esters & Ammine Sampled Separately

Plant 4

Acid Production

1. Pretreat. by Filt.
2. Hydrogenation
3. Fat Splitting
4. Glycerine Recovery
5. Distillation

Derivatives

1. Esterification

Plant 5 (d)

Acid Production

1. Hydrogenation
2. Fat Splitting
3. Glyceride Recovery
4. Distillation

Derivatives

1. Esterification
2. Ammination

(d) Production Units for Acids & Derivatives could not be sampled separately.

Plant 6 (e)

Acid Production

1. Distillation from Tall Oil

Derivatives

1. Dimerization & Trimerization
2. Ammination

(e) Only production units for derivatives were sampled.

for 5 plants, and presents an arithmetic average for these operations. It is noted that the RWL data presented in Table 4-5 are based on samples taken after gravity separation of fatty acids from the waste water. It is common practice to recycle the skimmed material back to the acid pretreatment section of the plant for recovery.

Table 4-6 summarizes the raw waste loads calculated from production of primary derivatives. The data shown relate to groups of processes in operation during the sampling program. Primary derivative products include esters, amines, nitriles, dimers and trimers, polyamides, and fatty quaternary ammonium chloride. An average RWL value for these processing operations is provided in Table 4-6.

The average values shown in Tables 4-5 and 4-6 are the basis for BPCTCA.

TABLE 4-5

PROCESS RWL ASSOCIATED WITH MANUFACTURE OF FATTY ACIDS (ALL RWL BASED ON SAMPLES TAKEN AFTER GRAVITY SKIMMING FREE FATTY ACIDS FROM WASTEWATER)

	Flow (lit./kkg)	BOD (kg/kkg)	COD (kg/kkg)	TOC (kg/kkg)
Plant 1 (1 day)	10,300 (a)	12.7	44.3	4.89
(1 day)	10,300 (a)	18.5	52.5	10.3
Plant 2 (1 day)	63,900	12.8	23.6	4.41
Plant 3 (1 day)	3,700 (b)	11.7	37.3	10.6
(1 day)	45,500 (c)	14.6	41.6	14.3
Plant 4 (1 day)	65,900	5.8	21.5	1.2
Plant 5 (1 day)	12,100 (d)	15.6	42.4	13.6
(1 day)	12,100 (d)	37.5	53.2	18.9
Average	28,000	16.1	39.6	9.8

(a) RWL includes wastewater from dimerization
(b) RWL does not include wastewater from glycerine recovery
(c) RWL based only on glycerine recovery (i.e., based on glycerine)
(d) RWL includes small contribution from derivatives

TABLE 4-6

PROCESS RWL ASSOCIATED WITH MANUFACTURE OF PRIMARY DERIVATIVES FROM FATTY ACIDS (NOTE RWL BASED ON SAMPLES TAKEN AFTER GRAVITY SKIMMING FREE OIL INDICATED BY ASTERISK)

	Flow (lit./kkg)	BOD (kg/kkg)	COD (kg/kkg)	TOC kg/kkg)
Plant 1* (1 day)	4,590	16.5	32.6	9.75
(1 day)	4,590	17.0	41.3	14.7
Plant 3				
Esters (1 day)	127,000[1]	26,500	54,700	13,600
Amines (1 day)	18,800[2]	495	1,070	245
Plant 4* (1 day)	8,920	28.6	14.7	5.7
Plant 6* (1 day)	5,700	9.82	23.0	3.73
Average (Exclude Plant 3)	6,400	18.0	27.9	8.47

[1] Sample taken prior to methanol recovery

[2] Sample from blowdown on recirculating system

Product: Ionone and Methylionone

Process: Condensation and Cyclization of Citral

Process RWL Subcategory: D

Chemical Reactions:

$$\text{Citral} + \text{Acetone} \xrightarrow{NaOH} \text{pseudo-Ionone}$$

$$\text{pseudo-Ionone} \xrightarrow{H_2SO_4} \alpha\text{-Ionone} + \beta\text{-Ionone}$$

Ionones and methylionones are used in perfumery and flavors; the beta ionone isomer is an intermediate in the manufacture of vitamin A.

The production of ionones and methylionones involves two steps. First, the pseudo-ionone is prepared by the condensation of citral obtained from lemongrass oil. The condensation reaction uses either acetone or methyl ethyl ketone to produce pseudo-ionone or pseudo-methylionone. Then these pseudo-ionones are cyclized with an acid catalyst. Commercial ionones are generally mixtures of the alpha and beta isomer, with one form predominating, although separations are sometimes made through bisulfite compounds.

A typical process flow diagram for producing ionone/methylionone is shown in Figure 4-42. Citral, acetone/methyl ethyl ketone, sodium hydroxide, and organic solvent are put into the first batch reactor. The solvent from this reaction step is recycled, and the product vapors are condensed and stored in a receiver. The crude product from the receiver is then distilled to remove the heavy-end residues and washed with caustic solution to obtain pseudo-ionone (or pseudo-methylionone).

These materials are fed into the second reactor, where cyclization is accomplished via a carbonium ion reaction with H_3PO_4, H_2SO_4, or BF_3 as catalyst. The reaction products proceed through a series of washing tanks, where the products are quenched with sulfuric acid and then washed by water, caustic solution, and acid solution.

After the washing steps, the product mixture is discharged into a series of distillation columns, where the organic solvent and heavy end residue are recovered and withdrawn from the main product stream. The product vapor leaving the

FIGURE 4-42

IONONE/METHYLIONONE-CONDENSATION AND CYCLIZATION OF CITRAL

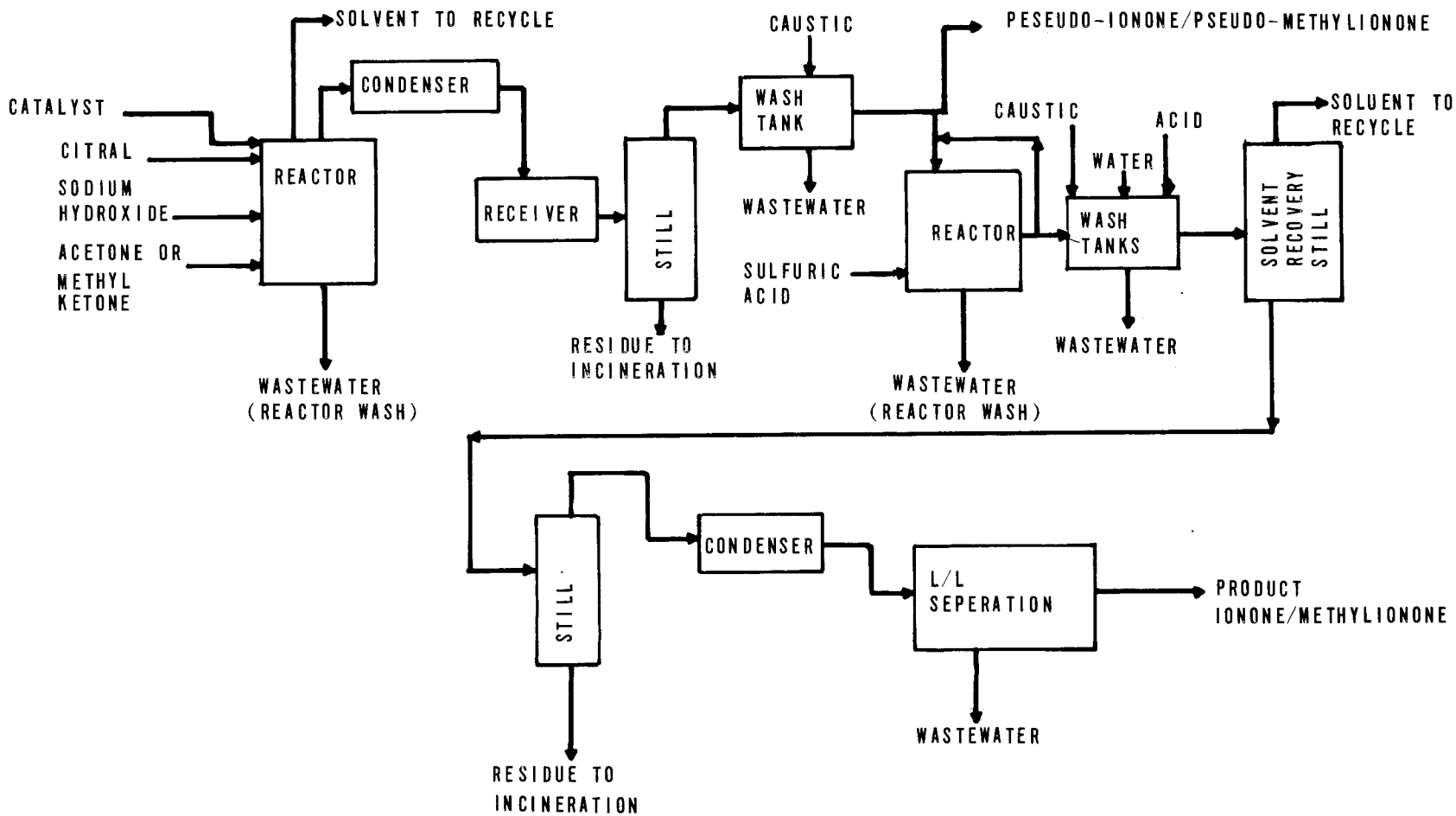

last distillation column is condensed and sent to a liquid-liquid separator for removal of water.

The major water pollution sources of this process are waste waters from the various washing steps and from periodic reactor washings. During the sampling visit, pseudo-ionone was being produced; hence the waste water samples obtained at the facility reflect ionone production RWL. However, the RWL of methyl-ionone is believed to be of the same order of magnitude as that of ionone. Process RWL's calculated from flow measurements and the analyses of the waste water streams are indicated in the following tabulation:

PROCESS FLOW

liter/kkg	9,370
gal/M lb	1,120

BOD5 RWL

mg/liter[1]	2,600
kg/kkg[2]	24

COD RWL

mg/liter[1]	10,000
kg/kkg[2]	98

TOC RWL

mg/liter[1]	3,600
kg/kkg[2]	34

[1]Raw waste concentrations are based on unit weight of pollutant per unit volume of process waste waters.

[2]Raw waste loadings are based on unit weight of pollutant per 1,000 unit weights of product.

The analytical results also indicate that, in addition to the parameters shown in the tabulation, pollution parameters such as pH, sulfate, oil, and chloride may be at levels potentially hazardous to biological treatment processes.

These data, shown above, were used to determine BPCTCA. The wastes from this plant are discharged to a municipal treatment plant.

Product: Methyl Salicylate

Process: Esterification of Salicylic Acid with Methanol

Process RWL Subcategory: D

Chemical Reactions:

Methyl salicylate, the methyl ester of salicylic acid, also known as "oil of wintergreen" is used as a flavoring compound in mouthwash and certain food products. A diagram of process is shown in Figure 4-43.

$$(C_6H_4OH)\ COOH + CH_3OH \longrightarrow (C_6H_4OH)\ COOCH_3 + H_2O$$

salicylic acid methanol — methyl salicylate

Raw waste loads for the production of methyl salicylate are indicated in the following tabulation:

PROCESS FLOW	
liter/kkg	1,735
BOD5 RWL	
kg/kkg	22.0
COD RWL	
kg/kkg	93.9
TOC RWL	
kg/kkg	37.9

FIGURE 4-43

METHYL SALICYLATE— ESTERIFICATION OF SALICYLIC ACID

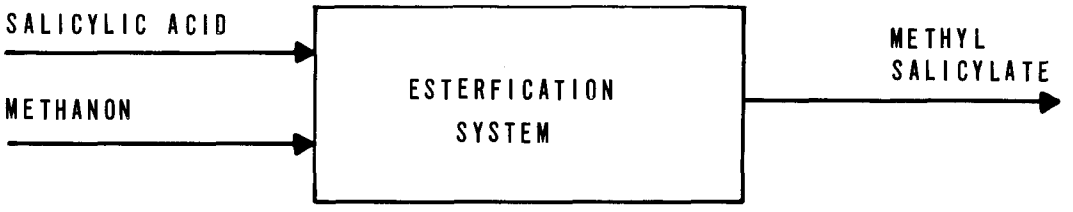

Products: Miscellaneous Batch Chemicals
Intermediates
Dyes
Rubber Chemicals

Process: Numerous Batch Processes (Batch Chemicals Complex)

Process RWL Subcategory: D

The RWL data presented and discussed in the following paragraphs were obtained by sampling the total effluent from a large chemical plant. This plant manufactures thousands of chemicals within the five general classifications indicated above. In this case, it was impossible to sample each of the process operations on an individual basis.

Daily 24-hour composite samples were taken over a period of 9 days, followed by three 5-day composite samples over the next 15 days. The measured flows and concentrations were put on a production basis by means of a weekly production activity report supplied by the manufacturer. The RWL data obtained in this manner are summarized in Table 4-7.

The RWL data shown in Table 4-7 represent the total raw waste from the plant. Examination of the data based on the nine consecutive 24-hour composite samples indicates significant variation. For example, the calculated mean for BOD is 20.4 kg/kkg of product with high and low values of 27.4 and 11.9 during the nine-day period.

It is significant to note that the three 5-day composite samples show approximately the same range of variability. The calculated average BOD raw waste load for the three periods is 24.1 kg/kkg, with high and low values of 35.8 and 14.1 respectively. BPCTCA raw waste loads for the batch chemicals complex was based upon the 5 day composite samples.

This type of variation may be caused principally by the fact that in this type of chemical plant it is difficult to relate production data to the exact sampling periods, and consequently, calculated ratios will always have this type of error present.

Production at a batch chemical complex involves the startup and shutdown of thousands of discrete batch processing operations on a day-today basis. Although the plant maintains a materials inventory, this is usually updated only on a monthly basis. In this particular case, the manufacturers expended considerable effort to provide weekly production figures based on changes in the materials inventory.

Table 4-7

RWL Data for Batch Chemical Complex

Sample Period	Flow L/kkg	BOD (kg/kkg)	COD (kg/kkg)	TOC (kg/kkg)
24 hr. composite	65,300	19.6	63.5	17.0
" "	74,800	16.5	68.4	19.5
" "	90,100	27.0	90.1	23.4
" "	89,300	27.4	96.4	29.9
" "	71,300	23.8	83.9	22.1
" "	113,000	27.4	99.4	29.2
" "	68,800	11.9	55.3	17.9
" "	70,400	13.0	60.4	23.9
" "	78,700	16.9	77.0	23.6
Average	80,100	20.4	77.2	22.9
5-day composite	70,600	22.4	80.9	27.1
" "	65,500	14.1	76.6	27.1
" "	100,000	35.8	144.	40.1
Average	78,700	24.1	100.5	31.4

Products: Citronellol and Geraniol

Process: Distillation of Citronella Oil

Process RWL Subcategory: D

Chemical Structure:

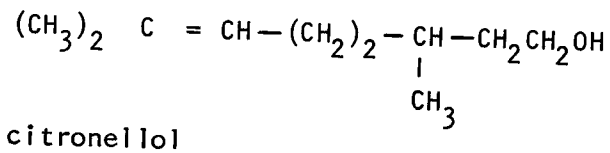

citronellol

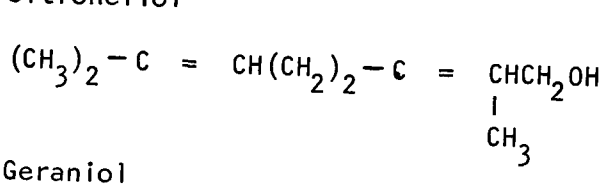

Geraniol

Citronellol and Geraniol are used as odorants in perfumery. Natural geraniol is produced by the distillation of citronella oil. Citronellol is made by limited hydrogenation of geraniol. Figure 4-44 is a process flow diagram of geraniol and citronellol production. Citronella oil, the raw material, is vacuum distilled to separate citronellol. The remaining citronella oil components undergo a three-stage potassium hydroxide washing prior to vacuum steam distillation followed by vacuum distillation. In this step, geraniol and citronellol are recovered; the geraniol fraction is washed with a caustic solution and then water. The geraniol terpene fraction then undergoes boration and washing prior to being rerun through the vacuum distillation step.

As shown in Figure 4-44, the major wastestreams from the process are vacuum jet condensates and waste water from product washes. The following tabulation summarizes the RWL calculated for the process:

Flow	
liters/kkg	10,000
gal/1000 lb	1,199
BOD5	
mg/l	5,810
kg/kkg	58.1
COD	
mg/l	11,100

FIGURE 4-44
CITRONELLOL AND GERANIOL-CITRONELLA OIL DISTILLATION

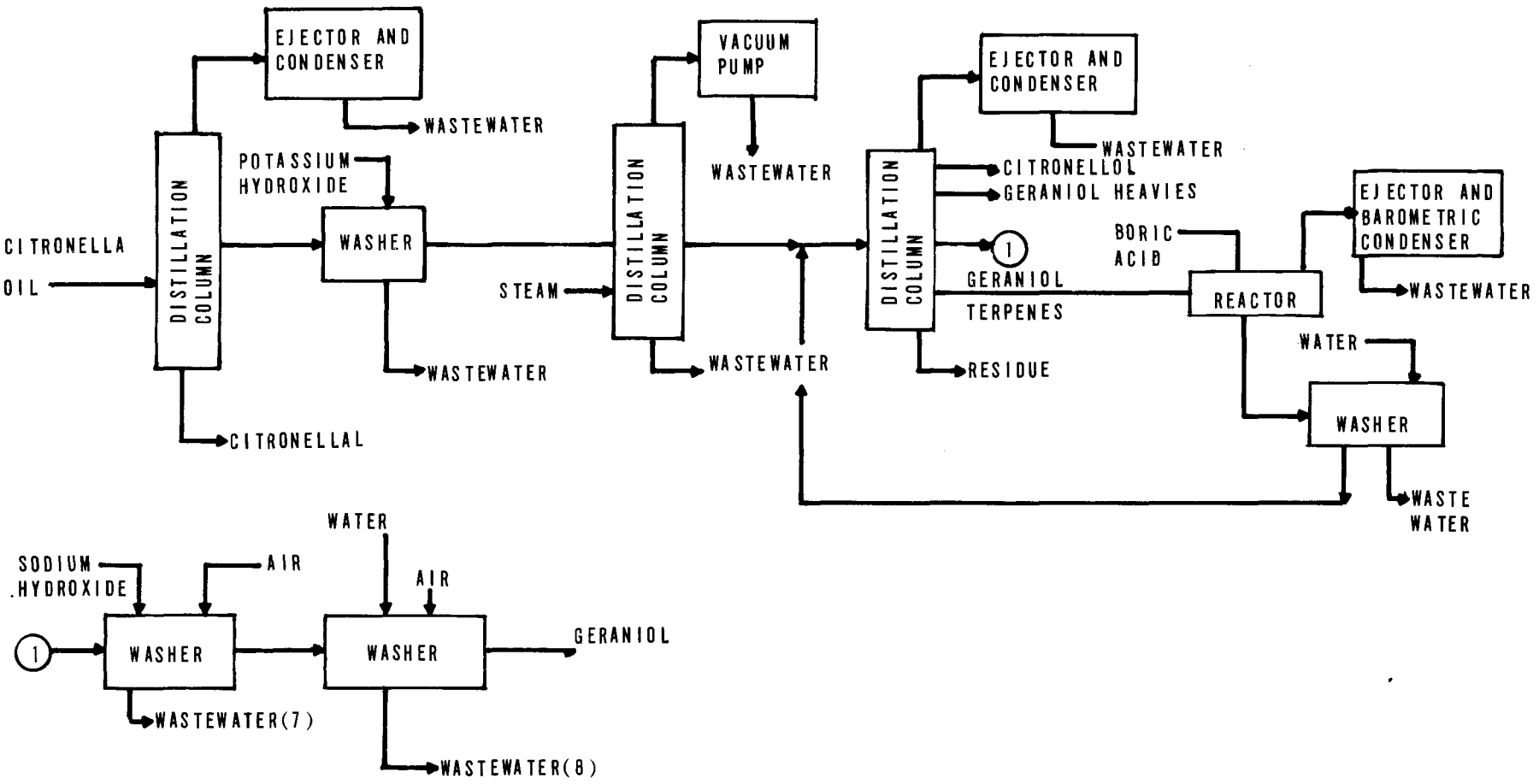

kg/kkg	111
TOC	
mg/l	3,770
kg/kkg	37.7

The foregoing values used to define BPCTCA.

Product: Plasticizers

Process: Condensation of Phthalic Anhydride

Process RWL Subcategory: D

Plasticizers are organic chemicals that are added to synthetic resins to improve workability during fabrication, to modify the natural properties of these resins, and to develop new improved properties not present in the original resins. This type of chemical is manufactured by liquid-phase batch reactions.

A generalized process flow diagram is shown in Figure 4-45, while the overall chemical reaction is given below:

$$\underset{\text{phthalic anhydride}}{C_6H_4C_2O_3} + \underset{\text{alcohol}}{2ROH} \longrightarrow \underset{\text{phthalate}}{C_6H_4C_2O_2(OR)_2} + H_2O$$

Feed materials, an alcohol and an anhydride, along with an acid catalyst, are fed into a reactor. The esterification is carried out at a pressure of about 10 psig and at temperatures ranging from 35 - 180°C, for six to 20 hours, depending on the feed and the desired product. The reactor effluent is either sent directly to a wash tank or passed through a filter press to remove solids, depending on whether activated charcoal or a catalyst neutralizer has been added to the reactor.

Caustic soda (or soda ash) is used in the wash tank to remove unreacted acid and anhydride. Waste water from the washing is sent to a series of settling tanks before being discharged to the sewer. Oil removed in the settling tanks is recycled back to the reactor.

The plasticizer stream from the wash tank flows to a stripper, where any remaining alcohol is taken overhead and recycled to the batch reactor. The main stream from the stripper is further polished by an activated carbon filter to obtain 99.5+ percent purity plasticizer.

RWL data obtained from a plant survey are summarized in the following tabulation. Since the plant surveyed is designed

FIGURE 4-45

PLASTICIZERS—CONDENSATION OF PHTHALIC ANHYDRIDE

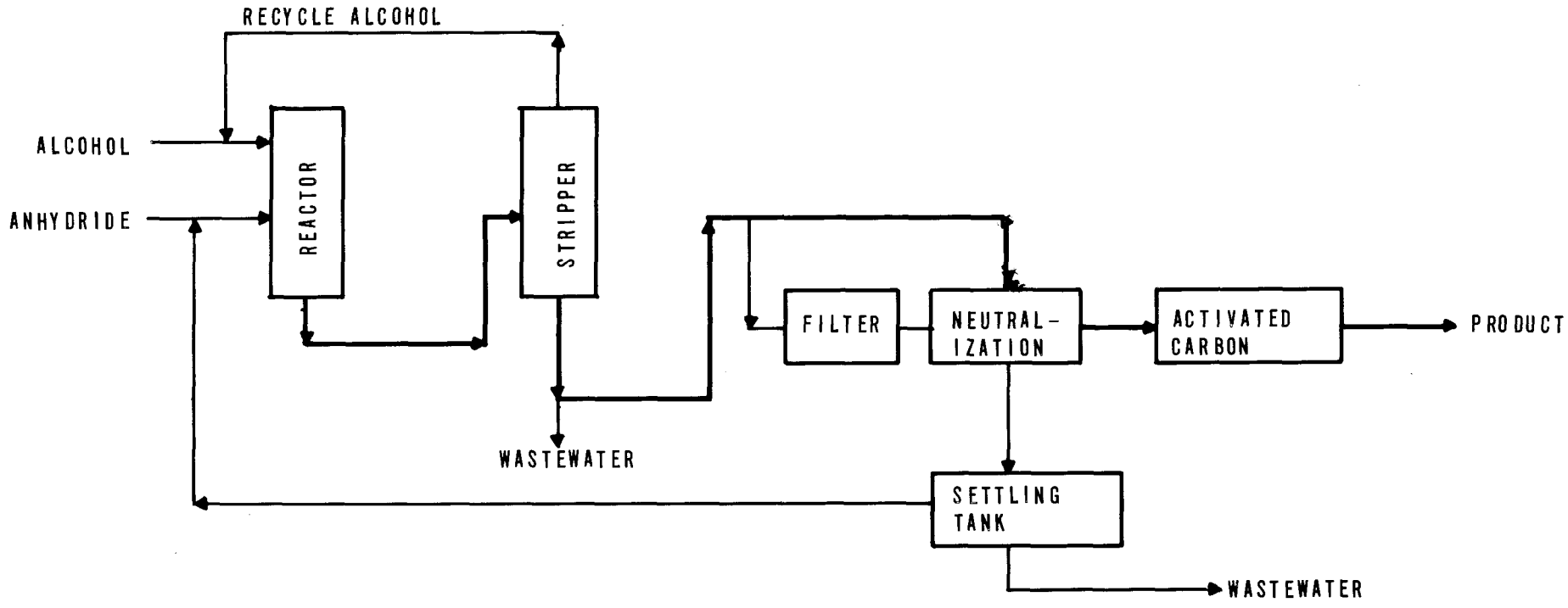

strictly for manufacturing of one plasticizer (diethyl phthalate), it requires less frequent reactor clean-up.

PROCESS FLOW

liter/kkg	653
gal/M lbs	78.3

BOD5 RWL

mg/liter[1]	82,600
kg/kkg[2]	53.9

COD RWL

mg/liter[1]	127,000
kg/kkg[2]	82.6

TOC RWL

mg/liter[1]	51,200
kg/kkg[2]	33.4

[1]Raw waste concentration are based on unit weight of pollutant per unit volume of process waste waters.
[2]Raw waste loadings are based on unit weight of pollutant per 1000 unit weights of product.

These data were used as the basis for BPCTCA.

Product: Dyes and Dye Intermediates

Process: Batch Chemical Reactions

Process RWL Subcategory: D

Dyes may be defined as intensely colored substances which, when applied to a substrate, impart color to this substrate by a process which, at least temporarily, destroys any crystal structure of the colored substances. The dyes are retained in the substrate by adsorption, solution, and mechanical retention, or by ionic or covalent chemical bonds. Pigments, on the other hand, are usually applied in vehicles (although the substrates themselves may serve as vehicles, e.g., in the mass coloration of polymeric materials), and retain, to some degree, their crystal or particulate structure.

The color of a dye is due to electronic transitions between molecular orbitals of the molecule, the probability of these transitions determining the intensity of the color. The energy differences between the orbitals determine whether the "color" falls in the visible range of the electromagnetic spectrum and, if it does, the precise shade or hue. Only organic molecules of considerable complexity, containing extensive conjugated systems and polar or semipolar substituents, are useful as dyes.

Much of the complexity of present-day dye technology arises from the great diversity of materials to be dyed, such as foods, drugs, cosmetics, waxes, greases, solvents, plastics, rubber, photographic film, leather, fur, paper, and, primarily, textiles. In the textile field, the introduction of synthetic fibers, such as cellulose acetate, nylon, polyester, acrylics, cellulose triacetate, and polypropylene, as well as the more stringent fastness requirements and the continuous-dyeing techniques, have presented the dye manufacturer and user with new problems. These problems cannot be separated from one another. For example, the new polyester fibers are sometimes dyed by a continuous heat-treatment process requiring new dyes with a new fastness property, sublimation fastness and a special physical form. Dispersed dyes, for instance, are more hydrophobic than those used previously for cellulose acetate. They must also be nonvolatile (i.e. must not sublime off the fiber during the heat treatment) and must have a physical form, either powder or paste, which gives rapid and stable dispersions in the dye bath.

Dye intermediates are derived from a wide variety of aromatic organic compounds, such as benzene, naphthalene, anthracene, higher polycyclic derivatives, and heterocyclics. The United States Tariff Commission lists some 230 compounds under the heading "cyclic intermediates", of which more than 210 are used in the dye industry. Many of the large-volume intermediates have a principal use outside the dye industry. For example, about 60 percent of the aniline produced is used in the rubber industry, and practically the entire phenol and phthalic anhydride production is consumed by the plastics industry. Originally, however, all three of these materials were exclusively dye intermediates.

The dyes themselves are usually much more complicated than the intermediates from which they are derived. Some dyes are mixtures, while others (such as aniline and sulfur colors) are still unknown structures. Therefore, systematic chemical names are rarely used. Almost all dyes also have a multiplicity of trade names in addition to their common names. Despite the diversity of trade names, a certain amount of rationality can be found in these names. Thus, most may be considered to be divided into three parts, as in the example of Cibacete/Brilliant Blue/BG. The first part usually gives the particular dyeing class, and, from this trade name, we learn that the dye is a disperse dye intended for application on acetate. Cibanone would be the same manufacture's designation for a vat dye of high fastness. The second part of the name is obviously the color, and the third part (BG in this case) refers to the shade. Often the letters subdivide the numerous reds, oranges, blues, and greens into bluish (B), greenish (G), yellowish (Y) (or G for the German "gelb"), and reddish (R) shades. A number in front of these letters indicates their depth, as in the name "Crystal Violet 6B". Other letters show other properties. Thus, K stands for cold dyeing (the German "kalt"), L for lightfastness, N for new, CF for copper free (as in the case of goods to be vulcanized), A for acetate left unstained, W for washfastness, and S for sublimation fastness. Strength and physical form are designated at times by such terms as Conc. (concentrated), Dbl. Pst. (double-strength paste), Pdr. (powder), etc.

Dyes have been classified by a wide variety of schemes. Classes based on usage and application are useful to the dyer and also to the dye manufacturer who must supply the demands. However, this type of classification results in groups containing a great diversity of chemical structures. Table 4-8 is arranged according to a usage classification and indicates briefly the major substrates, method of

Table 4-8

Usage Classification of Dyes

Class[1]	Major Substrates[2]	Method of Application	Major Chemical Types	Remarks
Acid	Wool,[2] silk, nylon, and polyacrylic	Applied usually from neutral to acid dyebaths	Azo, including premetallized dyes, anthraquinone, triphenylmethane, azine, xanthene, nitro, and nitroso	The very important premetallized dyes are members of this class
Azoic dyes and components (ingrain)	Cotton[2,3] (also silk, wool, and fur) and blacks on acetate and polyester	Fiber impregnated with coupling component and treated with solution of stabilized diazonium salt	Azo	
Basic	Cotton[2,3] leather, paper, wool, silk, polyacrylics, and other synthetics	Dyed on tannin mordanted cotton, directly on other materials	Triarylmethane, azo, azine, xanthene, thiazine, polymethine, oxazine, and acridine	"Cationic Dyes"
Direct	Cotton,[2,3] paper, and nylon	Applied from neutral or slightly alkaline baths containing additional electrolyte	Disazo, trisazo, and polyazo as well as a small number of phthalocyanine, stilbene, oxazine, and thiazole	Second most important class of dyes
Disperse	Cellulose acetate, triacetate, nylon, polyacrylic, and polyester	Fine aqueous dispersions often applied by high temperature "pressure" or lower temperature "carrier" dyeings. On cloth padded dye may be baked on or "thermofixed"	Simple azo, anthraquinone, and nitroarylamine	New fast-growing field of dyes important for synthetic fibers
Reactive	Cotton,[2,3] wool, silk, and nylon	Fixation on the fiber under alkaline conditions	Azo, anthraquinone, phthalocyanine, and stilbene	New class first introduced in 1956; bonds chemically to the fiber
Mordant	Wool,[2] silk, nylon, and anodized aluminum	Applied in conjunction with chelating salts of Al, Cr, and Fe	Anthrquinone, azo, oxazine, triphenylmethane, nitroso, and xanthene	
Solvent	Organic solvents; examples are inks, gasoline, laxquers, wood stain, cosmetics, plastics, and wax	Dissolution in the appropriate solvent or medium	Azo, triphenylmethane, anthraquinones, and copper phthalocyanine derivatives	
Sulfur	Cotton	Dissolved in water (with the addition of sodium sulfide for the insoluble types); exhausted with Glauber's salts	Sulfur dyes	
Vat	Cotton[2,3] and wool	By vatting (dye solubilized by reduction with sodium hydrosulfite), exhaustion on the fiber and reoxidation	Anthraquinone, polycyclic quinones, and indigo	
Optical Brighteners[4]	All Fibers, soaps, detergents, oils, paints, and plastics	From aqueous solution or dispersion or by incorporation in the mass	Stilbene, dibenzothiophenes, azoles, coumarin, and pyrazine	

[1] For Food, Drug, and Cosmetic dyes see Colors for foods, drugs, and cosmetics.
[2] Indicates major use.
[3] Includes all other cellulosic fibers and viscose.
[4] See Brighteners, optical.

application, and representative chemical types. A second type of classification based on chemical structure has also been used in the industry. Table 4-9 is arranged according to chemical classification, giving typical examples of the characteristic structural units and the application dying classes which fall in each chemical group. Tables 4-10 and 4-11 show U.S. production and sales of dyes by usage and chemical classification.

The primary source of organic raw materials for the dye industry has traditionally been products recovered from the fractional distillation of coal tar. Hence, the name "coal-tar dyes" is frequently used in place of the more correct "synthetic dyes". Coal tar is a by-product of the gasification (or carbonization) of coal, the primary purpose of which is the production of coke for steel manufacture and the gas for industrial and domestic heating. The coal tar is refined by distillation. From over 300 products which have been isolated and characterized the most important for the dye industry are benzene, toluene, xylene, naphthalene, anthracene, acenaphthene, pyrene, pyridine, carbazole, phenol, and cresols. The petroleum industry is now supplying an increasing proportion of the primary raw materials, notably benzene, toluene, xylene, and more recently, naphthalene.

In addition to the organic materials above, a great variety of inorganic chemicals are used in the dye industry. These include sulfuric acid and oleum for sulfonation, nitric acid for nitration, chlorine and bromine for halogenation, caustic soda potash for fusion and neutralization and sodium nitrate for diazotization, as well as hydrochloric acid sodium carbonate, sodium sulfate, sodium sulfite, sodium sulfide, aluminum chloride, sodium dichromate, manganese dioxide, iron powder, and many others.

The great number of intermediates used to manufacture dyes, and the comparatively small tonnages involved, make manufacture by continuous processes uneconomical. Anthraquinone, produced from anthracene by catalytic air oxidation, is one of the very few intermediates used solely by the dye industry that is made by a continuous process. Other large-volume intermediates (e.g., aniline, phthalic anhydride, and phenol) are also manufactured by continuous process but, as mentioned previously, the bulk of production is used in other industries.

The batch processes for the production of dyes and intermediates are carried out in reaction kettles made from cast iron, stainless steel, or steel, often lined with

Table 4-9

Chemical Classification of Dyes

Class	Dyeing Classes	Remarks
Nitroso	Acid, disperse, mordant	Dyed as a metal chelate
Nitro	Acid, disperse, mordant	
Azo monoazo disazo trisazo polyzao	Acid, direct, mordant, disperse, basic, reactive	A large and varied class produced almost without exception by the coupling of a diazotized aromatic amine to a phenol, amine, pyrazolone, or other coupling component
Azoic	Azoic	Insoluble dye formed directly on fiber from soluble components by diazotization and coupling
Stilbene	Direct, reactive	Class also includes mixtures of indeterminate constitution made for example by condensation of nitro stilbene compounds and aromatic amines
Diphenylmethane (ketone imine)		
Triarylmethane	Basic, acid, mordant	Brilliantly colored dyes of only moderate lightfastness
Xanthene	Basic acid, mordant	Pure, bright hues
Acridine	Basic (sulfur)	Basic dyes used chiefly on leather; also for antiseptics
Quinoline	Acid, basic, direct, disperse	Used for cotton, paper, and more recently in disperse dyeing
Methine and Polymethine		Important in photography
Thiazole	Direct, basic, reactive (sulfur)	
Indamine and indophenol		Intermediates for photographic and sulfur dyes
Azine	Acid, basic, oxidation (sulfur)	The first commercially important synthetic dye; Perkin's Mauve belongs to this class
Oxazine	Basic, mordant direct (sulfur)	
Thiazine	Basic, mordant vat (sulfur)	
Sulfur	Sulfur, vat	Obtained by heating a variety of organic compounds with sulfur or polysulfides to give disulfide or sulfoxide bridges
Aminoketone and hydroxyketone		The natural dye logwood is included in this class
Anthraquinone	Acid, mordant, vat, dispersed, basic, direct, reactive	Condensed polycyclic quinonoid dyes of great importance
Indigoid	Vat, acid	Derivatives of indigo and thioindigo
Phthalocyanine	Acid, direct, azoic, vat, sulfur, basic reactive	Only blue or green dyes and pigments (of high lightfastness) are found in this class
Oxidation bases	Incompletely characterized oxidation products from amines, diamines, and aminophenols	Aniline Black is a member of this class

Table 4-10

U. S. Production of Dyes
by Classes of Application, 1965

Class of Application	Production in 1,000 lbs.	Sales Quantity in 1,000 lbs.	Sales Value in $1,000's	Sales Unit Value $/lb.
Total	207,193	189,965	292,284	1.54
Acid	20,395	18,666	39,025	2.09
Azoic dyes and components:				
Azoic compositions	2,100	2,043	3,968	1.94
Azoic diazo components, bases (fast color bases)	1,558	1,310	2,057	1.57
Azoic diazo components, salts (fast color salts)	2,835	2,646	2,683	1.01
Azoic coupling components (naphthol AS and derivatives)	3,172	2,429	4,669	1.92
Basic	10,573	9,553	23,907	2.50
Direct	36,080	33,663	50,970	1.51
Disperse	15,514	13,522	32,878	2.43
Fiber-reactive	1,586	1,558	6,744	4.33
Fluorescent brightening agents	19,420	18,284	34,516	1.89
Food, drug, and cosmetic colors	2,923	2,736	10,238	3.74
Mordant	4,745	4,246	5,706	1.34
Solvent	9,837	8,930	15,351	1.72
Sulfur	18,648	17,471	9,960	0.57
Vat	57,511	52,439	48,728	0.93
All Other	296	469	884	1.88

Source: Synthetic Organic Chemicals, U. S. Tariff Commission

Table 4-11

U. S. Production and Sales of Dyes
by Chemical Classification 1964

Chemical Class	Production in 1,000 lbs.	Sales: Quantity in 1,000 lbs.	Sales: Value in $1,000's	Sales: Unit Value $/lb.
Total	184,387	178,273	264,023	1.48
Anthraquinone	41,661	40,675	66,889	1.64
Azo, total	57,897	57,367	96,579	1.68
Azoic	8,787	7,399	12,149	1.64
Cyanine	373	362	1,113	3.07
Indigoid	5,729	6,144	3,302	0.54
Ketone Imine	731	782	1,614	2.06
Methine	1,074	974	3,367	3.46
Nitro	720	679	1,258	1.85
Oxazine	172	144	601	4.17
Phthalocyanine	1,987	1,868	4,800	2.57
Quinoline	637	519	1,658	3.19
Stilbene	18,488	17,640	29,166	1.65
Sulfur	17,776	17,268	9,798	0.57
Thiazole	462	480	1,043	2.17
Triarylmethane	5,607	5,312	12,682	2.39
Xanthene	1,312	737	3,473	4.71
All Other	20,974	19,923	14,531	0.73

Source: Synthetic Organic Chemicals, U. S. Tariff Commission
in 1965 total dye production increased 12.5% to
207 million lb.

rubber, glass (enamel), brick,carbon blocks, or stainless steel. These kettles have capacities ranging from 500 to 10,000 gallons and are equipped with mechanical agitators, thermometers, condensers, etc., depending upon the nature of the operation. Products are transferred from one piece of equipment to another by gravity flow, pumping, or by blowing with air or inert gas. Plate and frame filter-presses, boxes, and centrifuges are used for the separation of solid products from liquids. Where possible, the intermediates are used for the subsequent manufacture of other intermediates or dyes without drying. Where drying is required, air or vacuum ovens (in which the product is spread on trays) and rotary dryers are used. Less frequently used are drum dryers (flakers) and spray dryers, although the latter are becoming increasingly important.

Most of the material handling is manual, and labor costs represent a significant part of the final dye price. Automatic process control, based on feedback from temperature, redox potential, and pH measurement is finding increasing use in the industry.

The actual manufacture of intermediates and dyes proceeds by a series of chemical reaction steps. The major steps and associated chemical reactions typical of each are listed as follows:

Step 1 - <u>Addition of Functional Groups to Raw Materials</u>

The attachment of one or more chemical groups to the aromatic hydrocarbon raw material. Typical reactions include sulfonation, nitration, halogenation, and oxidation. Normally, the starting raw material (such as benzene, toluene anthracene, etc.) is reacted in the presence of aqueous sulfuric or nitric acid.

Step 2 - <u>Replacement of Functional Groups on Intermediates Produced in Step 1</u>

The replacement of the functional groups introduced in Step 1 by other groups of higher reactivity which cannot be introduced directly. The starting materials for this step may be the intermediate produced in Step 1 or intermediates purchased from another manufacturer. Typical reactions include: caustic fusion, to replace a sulfonic acid group with a hydroxyl group; replacement of a sulfonic acid group by an amino group by reaction with

ammonia; and replacement of halogen atoms by hydroxyl or amino groups.

Step 3 - Further Modification of Functional Groups On Intermediates from Step 2

This step involves the further modification or development of functional groups on the intermediates produced in Step 2 (or purchased intermediates). There can be few generalizations about these reactions, as each particular case depends on the specified end product required. Examples of these reactions include alkylation of functional groups by reactions of the intermediate with an alcohol, acylation with organic acid chlorides or anhydrides, and other rearrangements.

Step 4 - Combination of Two or More Intermediates to Form a Dye

In this step, two or more intermediates are combined to form a product having a skeletal, if not complete, dye structure. Typical reactions include diazotization and coupling, condensation and dimerization. It should be noted that many of these products may themselves also be intermediates in the synthesis of dyes of greater complexity.

When defining the production of dyes and intermediates at a specific plant, it must be understood that some manufacturers purchase the intermediates associated with Steps 1, 2, and 3, so that Step 4 may be the only chemical reaction processing done at the plant. Other manufacturers carry out Steps 1, 2, 3, and 4 in the synthesis of a dye product. Although the final quantities of dye product sold at each plant might be the same, the actual production activity (as measured by intermediates production) would be drastically different.

It should also be noted that production schedules vary drastically in dye plants.

Both the types and specific quantities of dyes and intermediates which are manufactured change on a week-to-week basis.

Because of the nature of the batch operations, it was not possible to isolate dye products according to chemical or usage classification for the development of production-based raw waste load data. Instead, the entire plant was sampled

for periods up to one month. Waste water flows and analyses were developed on a 24-hour composite basis. Production for the corresponding period was defined to include all dyes and intermediates which were separated within the establishment during the sampling period. A commodity was considered separated when it was isolated from the reaction mixture and/or when it was weighed, analyzed, or otherwise measured.

It should be noted that in some cases, it was not possible to differentiate between production as 100 percent active ingredients and as standardized material. The difference between these two relates to quantity of inert diluent which is added to some dyes prior to shipment to the user. The raw waste load data presented subsequently are based primarily on standardized material. The ratio of standardized material to 100 percent active ingredients can be as high as 10 to 1. This means that if the raw waste loads were based on 100 percent active ingredients, the data reported should be increased by a factor of ten (depending on the specific plant.)

The following tabulation summarizes the raw waste load data obtained from six plants sampled during both phases of this study.

Process RWL for Dyes and Intermediates

Plant	Flow (lit./kkg)	BOD5 (kg/kkg)	COD (kg/kkg)	TOC (kg/kkg)
1. (10% occurrence)		5	50	40
(50% occurrence)	795,000	79	1,850	790
(90% occurrence)		156	3,700	1,580
2. (10% occurrence)		17	104	25.0
(50% occurrence)	205,000	62	212	57.0
(90% occurrence)		106	318	89.5
3. (10% occurrence)		278	1,060	350
(50% occurrence)	1,840,000	602	1,595	502
(90% occurrence)		930	2,155	656
4. (sampled 3 days)	32,800	-	195	205
	32,800	1.18	19.5	5.24
	32,800	-	189	49.2

Process RWL for Dyes and Intermediates
(continued)

Plant	Flow (lit./kkg)	BOD5 (kg/kkg)	COD (kg/kkg)	TOC (kg/kkg)
5. (sampled 2 days)	114,000	220	1,075	450
	114,000	126	652	269
6. (sampled 1 day)	175,000	59	175	60
Mean based on 50% Plants 1, 2, 3	395,000	248	1,219	449

Only Plants 1, 2, and 3 were used to compute the mean RWL shown, as they were sampled for 1 month (30 days.) In such case, the 50% occurrence value was used.

Product: Toner and Lake Pigments

Process RWL Subcategory: D

Pigments are various organic and inorganic water insoluble substances. They are used in surface coatings, and also in the ink, plastic, rubber, ceramic, paper, and linoleum industries to impart color. A large number of pigments are produced because different products require a particular choice of material to give maximum coverage, economy, opacity, color, durability, and desired reflectance.

Organic pigments may be subclassified into toners and lakes. Toners are insoluble organic dyes that may be used directly as pigments because of their durability and coloring power. Toners are used in paints, printing inks, and wallpapers, and especially for the pigment printing method for textiles, which employs pigments of metal phthalocyanines and other types. Lakes result from the precipitation of organic colors, usually of synthetic origin, with salts of Ca, Ba, Cr, Al, or phosphomolybdic acid. The dye molecule frequently contains -OH or -SO3H groups. Such lakes, when ground in oil or other media, form the pigments of many of our paints and inks. Some basic dyes are used for the tinting of paper in a water-dispersed form or phosphomolybdic (or tungstic) acid lakes. Wallpapers are frequently colored with lakes from basic dyes containing a sulfonic acid group. The use of pigments in the "dope" before spinning rayon, acetate, and synthetic fibers is growing rapidly and is producing excellent colors of outstanding all-around fastness.

One facility visited during the field survey produced toners for the pigment printing of textiles. Figure 4-46 is a process flow diagram for the manufacture of this product. Hydrochloric acid, sodium nitrite, water, an amine, and sulfamic acid are put into the first reactor. The coupler is prepared in the second reactor. This entails the addition of a coupling agent, sodium hydroxide, water, and steam. The reaction products from both reactors then proceed to a third reactor, where they are combined with acetic acid, sodium acetate, and water. The pigment which forms in this reactor is filtered. The solid phase is recovered as the pigment dye, while the mother liquor is presently discharged into the sewer.

Samples were obtained on two successive days to characterize the wastewater from this process. The samples for the two days indicate that the characteristics of the waste water are quite variable, attributable mainly to the batch nature

FIGURE 4-46
PIGMENT DIAZOTIZATION AND COUPLING

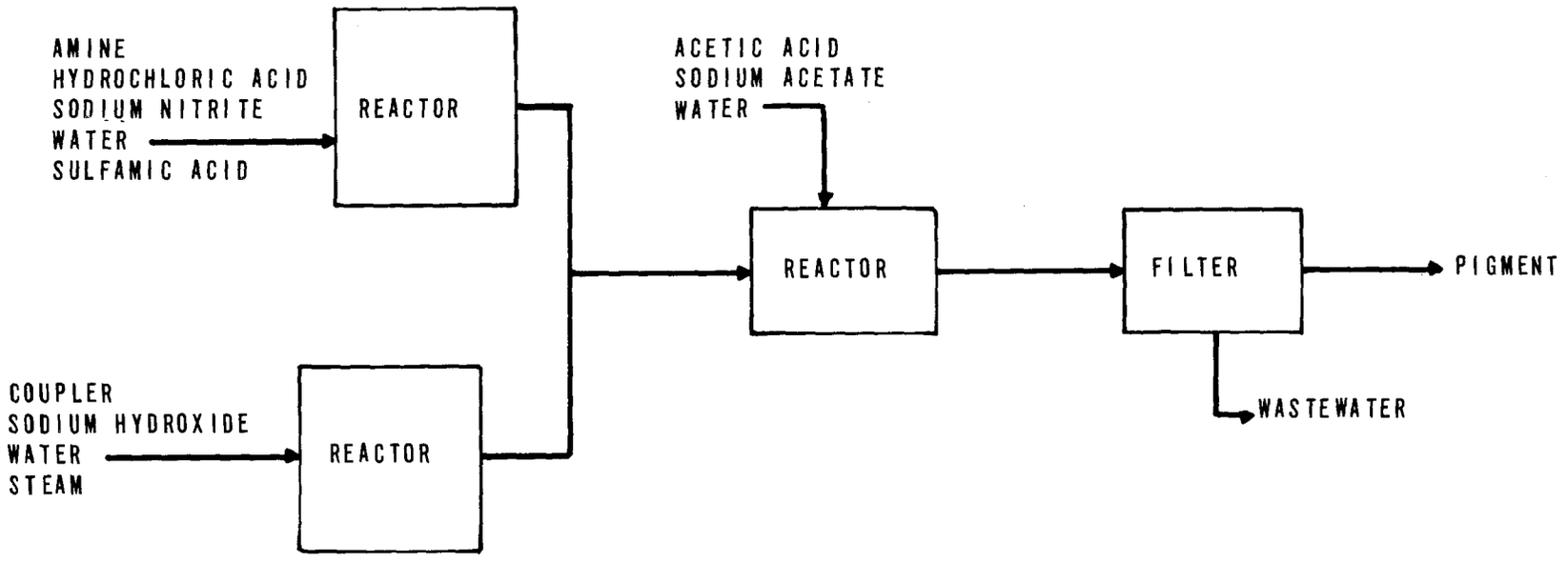

of the operation. The second plant produced lakes for use in paints.

The following tabulation of process RWL, calculated from flow measurements and the analyses of the waste water stream, includes data obtained for both plants.

	Plant 1 (Toners) 1st Day		Plant 2 (Lakes) 2nd Day
PROCESS FLOW			
liter/kkg	313,000	313,000	1,000,000
gal/M lb	37,500	37,500	
BOD5RWL			
mg/liter[1]	3,000	640	1,470
kg/kkg[2]	940	200	
COD RWL			
mg/liter[1]	11,300	1,000	4,930
kg/kkg[2]	3,520	315	
TOC RWL			
mg/liter[1]	750	570	819
kg/kkg[2]	235	178	

[1]Raw waste concentrations are based on unit weight of pollutant per unit volume of process waste waters.
[2]Raw waste loadings are based on unit weight of pollutant per 1,000 unit weight of product.

The average RWL from Plant 1 was considered as BPCTCA for toners while the RWL from Plant 2 was considered as BPCTCA for lakes.

Product: Citric Acid

Process: Fermentation of Molasses

Process RWL Subcategory: D

Reactions:

$$C_{12}H_{22}O_{11} \text{ or } C_6H_{12}O_6 + H_2O \longrightarrow C_6H_8O_7 + CO_2 + H_2O$$

sucrose or dextrose water citric acid carbon dioxide water

Typical Material Requirements

	1000 kg citric acid
Molasses	2500 kg
Nutrients	10 to 15 kg
Sulfuric Acid (95%)	1100 kg
Lime	700 kg

Citric acid is one of the widely employed organic acids. Its major use is as an acidulant in carbonated beverages, jams, jellies, and other foodstuffs. Another important use of citric acid is in the medicinal field, including the manufacture of citrates and effervescent salts. There are a few industrial uses, including citric acid as a sequestering agent, and acetyl tributyl citrate as a vinyl resin plasticizer.

Except for small amounts produced from citric fruit wastes, citric acid is manufactured by aerobic fermentation of crude sugar or molasses. The fermentation changes sugar, a straight-chain compound, into a branched chain.

Production of citric acid may proceed by either of two methods: fermentation in shallow pans, or fermentation in aerated tanks. Both processes may be used simultaneously as shown in Figure 4-47. In the tray process, a sugar solution is placed in the trays, and air is circulated for 9 to 12 days over hundreds of shallow, pure-aluminum trays. The trays are placed in a closed cabinet provided with facilities for sterilization, ventilation, and temperature

FIGURE 4-47
CITRIC ACID-OXALIC ACID-FERMENTATION OF MOLASSES

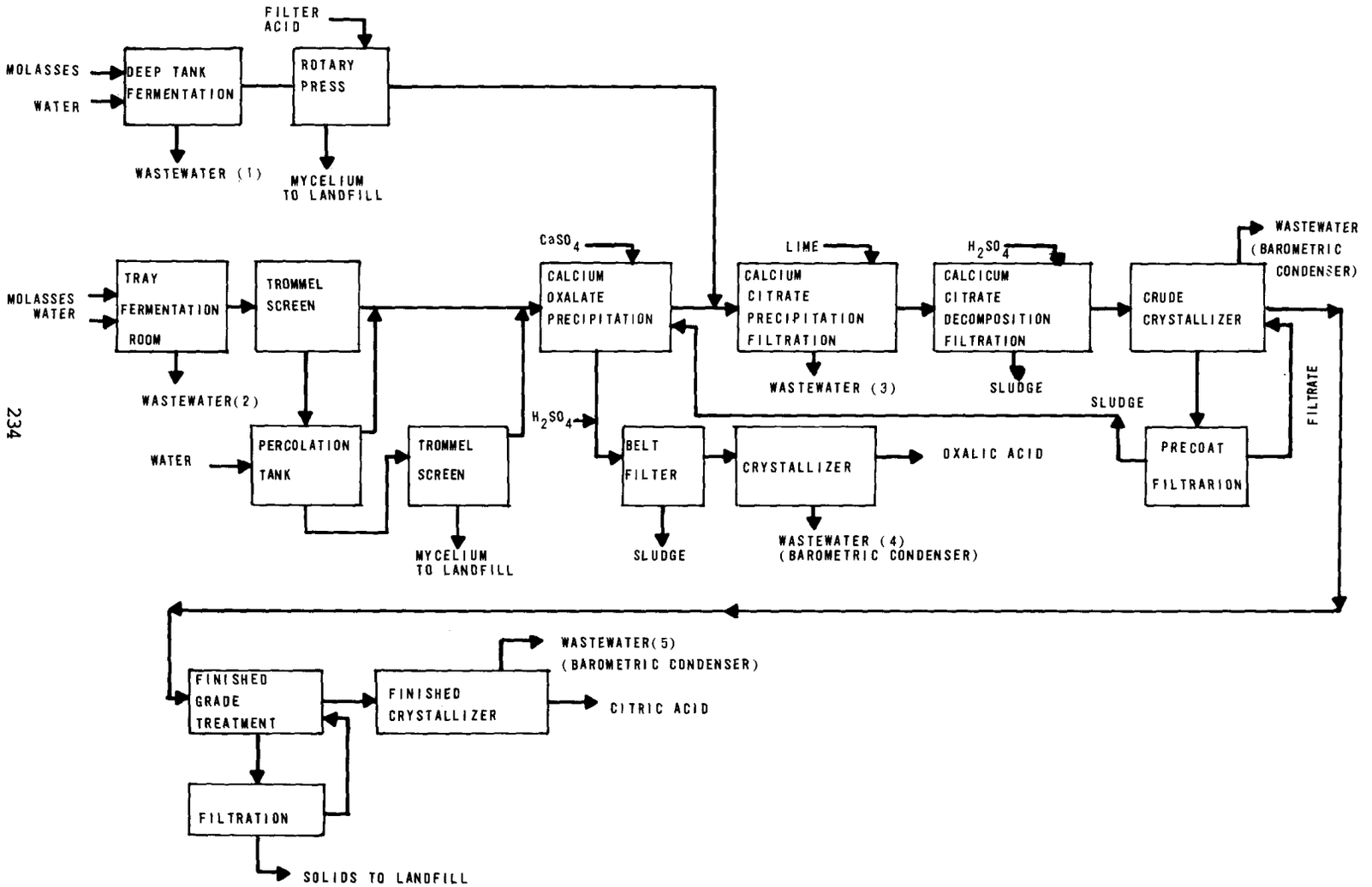

control. After fermentation, the mycelium from the yeast used is removed from the broth by screens or filters, and the spent mycelium is washed and disposed. Mycelium washwater containing citric acid is combined with acid separated in the filtration step. The citric acid then passes through an oxalic acid recovery stage. (Oxalic acid is available for recovery only from the tray process.) The addition of calcium sulfate precipitates calcium oxalate. Addition of sulfuric acid recrystallizes the calcium sulfate, and the solids are removed by filtration. Hydrous oxalic acid is then crystallized under a vacuum pulled by a barometric condenser.

After removal of the oxalic acid, the broth is combined with the liquor produced in the deep tanks. The essential steps of the deep tank process are similar to the tray process, but a different type of mycelium culture is grown and oxalic acid is not generated as a by-product. Molasses and water are first introduced into the deep fermentation tanks. Air is introduced to maintain aerobic conditions and to keep the tank contents well mixed. The fermentation process is complete after approximately 4 to 9 days at 30 to 32°C. The tanks are then emptied and partially filled with boiling water to sterilize them prior to the next batch. The crude liquor is filtered to remove the mycelium, and the broth is combined with the broth produced in the tray processes.

Citric acid is recovered from the broth by precipitation with calcium hydroxide. The solution is then passed through a series of filters for removal of the crystallized calcium citrate. Both filtrate and washwater used during the filtration process are discharged as waste. The calcium citrate is then chemically reacted with sulfuric acid to form calcium sulfate and citric acid. The calcium sulfate is removed by filtration to purify the citric acid. Some of the filter cake is recycled to the oxalic acid precipitation process, while the remainder is wasted. The crude citric acid is then concentrated from 30 to 60 percent in a double-effect evaporator equipped with a two-stage steam jet to pull the vacuum. Barometric condensers are employed following the steam jets. Since the citric acid does not vaporize, the only loss in the evaporator is by entrainment. Thus, entrainment separators are used prior to the condensers.

The crude product crystals are redissolved in water during the finishing step. Treatment processes, including granular activated carbon, are employed to remove trace heavy metals and color. The white liquid is then crystallized (utilizing a barometric condenser), dried, and packaged for sale.

To determine the raw waste load, samples of the various wastestreams were obtained. These wastestreams included tray and deep tank washwaters, filtrate from the calcium citrate filtration step, and barometric waste waters from the purification steps. A waste water stream (barometric condenser waste water) resulting from the purification of oxalic acid was included in the raw waste load; thus, production is expressed as the combined total of oxalic and citric acids in their anhydrous forms. Process raw waste loads calculated from flow measurements and the analyses of these streams are indicated in the following tabulation:

	Oxalic plus Citric Acids (Anhydrous form)
Process Flow	
liter/kkg	477,000
gal/M lb	57,200
BOD5 RWL	
mg/liter[1]	690
kg/kkg[2]	328
COD RWL	
mg/liter[1]	1,380
kg/kkg[2]	657
TOC RWL	
mg/liter[1]	507
kg/kkg[2]	242

[1]Raw waste concentrations are based on unit weight of pollutant per unit volume of process waste waters. [2]Raw waste loadings are based on unit weight of pollutant per 1000 unit weights of product.

The foregoing data was used as the basis for BPCTCA. The wastes from this plant are currently discharged to surface water without treatment.

The analytical results also indicate that, in addition to the parameters shown in the tabulation, pollution parameters such as sulfate, nitrogen, chloride, calcium, magnesium, and zinc may be at levels potentially hazardous to biological treatment processes. Proper pretreatment to reduce the aforementioned parameters may be necessary before the

wastestreams can be discharged into any biological treatment unit.

Noncontact waste waters include cooling water and steam condensate. The total cooling water usage is approximately 107,000 gallons per 1000 lbs of product. A large quantity of the cooling water is employed in tube-and-shell heat exchangers. The total steam usage (live plus reboiler) is estimated to be 15,500 lbs per 1000 lbs of product.

Product: Naphthenic Acid

Process: Extraction and Acidification of Caustic Sludge from Petroleum Refinery

Process RWL Subcategory: D

Chemical Structure: Naphthenic acids are cyclo-paraffinic organic acids and usually are mono-carboxylic

The term "naphthenic acid" is applied to the mixture of carboxylic acids obtained from the alkali washes of petroleum fractions. They are complex mixtures of normal and branched aliphatic acids, alkyl derivates of cyclopentane- and cyclohexane-carboxylic acids, and cyclopentyl and cyclohexyl derivates of aliphatic acids. Naphthenic acids are used chiefly in the form of metallic salts which are soluble in oils and organic solvents. Copper naphthenate is an excellent fungicide for wood and canvas treating. The lead, manganese, zinc, and iron salts are used as dryers (oxidation catalysts) for paints and varnishes.

The naphthenic acids are present in caustic sludge primarily as sodium naphthenates. Figure 4-48 is a process flow diagram of naphthenic acid recovery. The caustic sludge, which has been used to scrub the light distillate crude oil fractions, is treated with water and an alcohol soap solvent. The resulting oil and soap phases are separated; the oil phase is stripped with the oil going to fuel and the solvent recovered overhead. The soap phase is treated with an oil solvent, and another oil phase/soap phase separation takes place. The oil phase is recycled to the caustic sludge, while the soap phase is treated with an acid. The naphthenic acids are then separated from the solvent.

The solvent proceeds to a stripper where it is recovered as the overhead and sent to solvent storage. The bottoms from this column are quenched with water and discharged to the sewer. The extracted naphthenic acids go to a stripper, where solvent is taken overhead and sent to storage. The bottoms from the stripper are vacuum distilled. The bottoms from the vacuum still are sent to fuel, while the naphthenic acids are recovered.

Process RWL calculated from flow measurements and the analyses of waste water streams are indicated in the following tabulation. In addition, the sulfate concentrations in the waste water are extremely high may be potentially hazardous to biological treatment processes.

FIGURE 4-48

NAPHTHENIC ACID - EXTRACTION AND ACIDIFICATION OF CAUSTIC SLUGE FROM PETROLEUM REFINERY

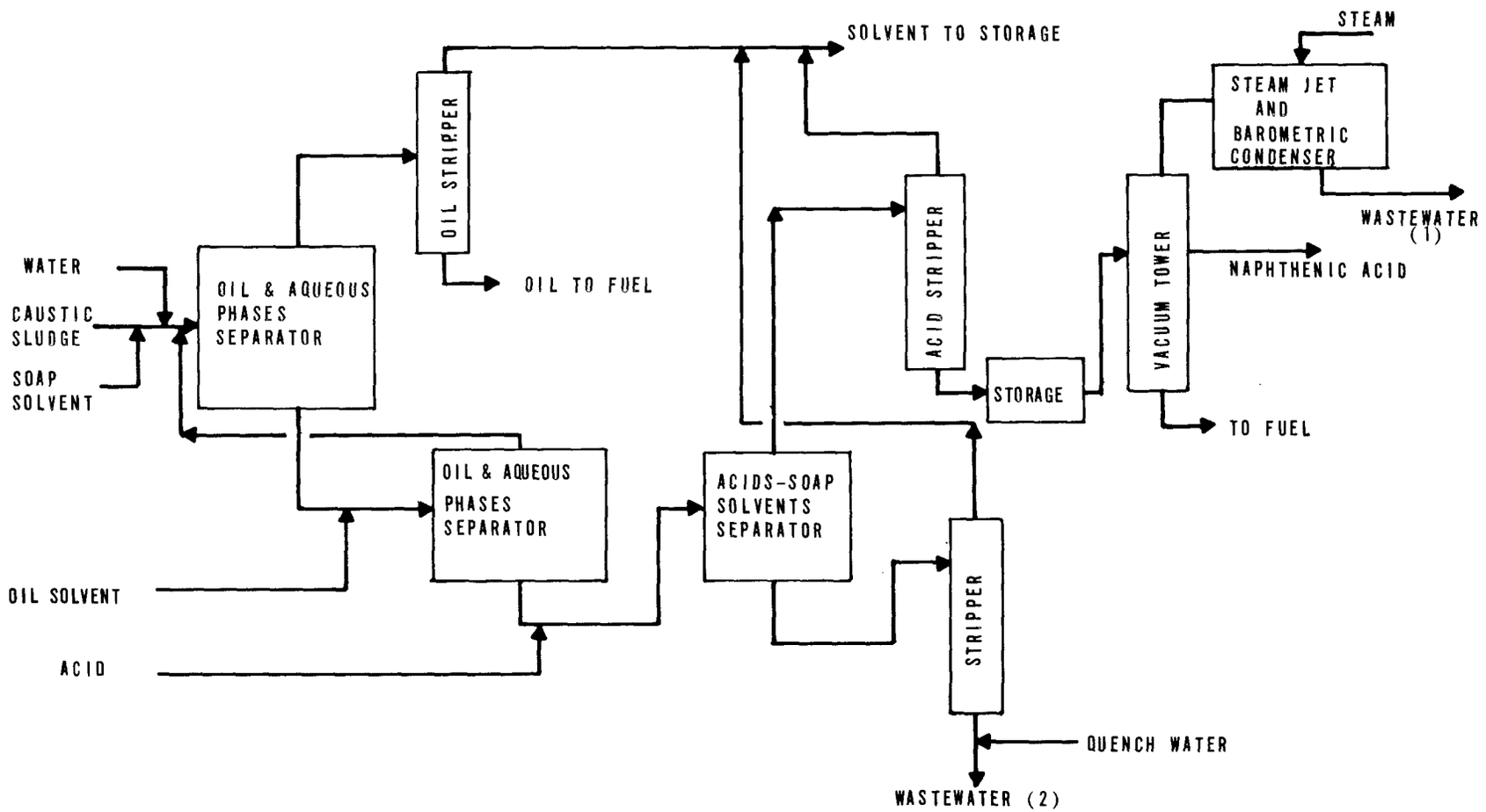

PROCESS FLOW	
liter/kkg	39,800
gal/M lb	4,760
BOD5 RWL	
mg/liter[1]	3,550
kg/kkg[2]	141
COD RWL	
mg/liter[1]	7,500
kg/kkg[2]	298
TOC RWL	
mg/liter[1]	2,630
kg/kkg[2]	104

[1]Raw waste concentrations are based on unit weight of pollutant per unit volume of process waste waters.
[2]Raw waste loadings are based on unit weight of pollutant per 1,000 unit weights of product.

These data presented above were the basis for BPCTCA.

The process plant visited during the field data collection program used direct-contact cooling to reduce the temperature of the bottoms stream from the soap stripper. The substitution of noncontact cooling would reduce the water requirements for this process by approximately 75 percent. However, the raw wasteload would not be appreciably affected.

Product: Monosodium Glutamate (MSG)

Process: Batch Fermentation of Beet Sugar Molasses

Process RWL Subcategory: D

Chemical Reaction:

Fermentation (Glutamic Acid Production)

Fermentation (Glutamic Acid Production)

Beet Sugar (sucrose) + Bacteria Culture + O_2 + NH_3 $\longrightarrow$

$$\begin{array}{l} NH_2\text{-}CH\text{-}COOH \\ \quad\;\; | \\ \quad CH_2\text{-}CH_2\text{-}COOH \end{array} + H_2O + CO_2 + \text{Bacteria Mass}$$

glutamic acid

MSG Conversion and Neutralization

$$\begin{array}{l} NH_2\text{-}CH\text{-}COOH \\ \quad\;\; | \\ \quad CH_2\text{-}CH_2\text{-}COOH \end{array} + NaOH \longrightarrow \begin{array}{l} NH_2\text{-}CH\text{-}COOH \\ \quad\;\; | \\ \quad CH_2\text{-}CH_2\text{-}COONa \end{array} + H_2O$$

mono sodium glutamate

Typical Raw Materials

Beet Sugar Molasses, Ammonia (NH3), Bacteria Culture, Nutrient Salts, Compressed Air, Diatomaceous Earth, Filter Aid, Hydrochloric Acid (HCl), Sodium Hydroxide (NaOH), Steam Cooling Water and Bleaching Activated Carbon

Monosodium Glutamate (MSG) is an amino acid salt which is used as a flavor enhancer. MSG is produced by the conversion of Glutamic Acid (GA) with caustic. There are several routes to obtaining the GA, including hydrolysis of Steffen's Waste Liquor with caustic or acid, acid hydrolysis of wheat and corn gluten, and fermentation of a carbohydrate.

The process visited during the field data collection program was the fermentation of beet molasses (sucrose) to produce glutamic acid. This fermentation reaction is a batch reaction; subsequent separation processes and the conversion of the glutamic acid to monosodium glutamate are done on a semi-continuous basis (refer to Figure 4-49).

FIGURE 4-49

SODIUM GLUTAMATE — FERMENTATION OF BEET SUGAR MOLASSES

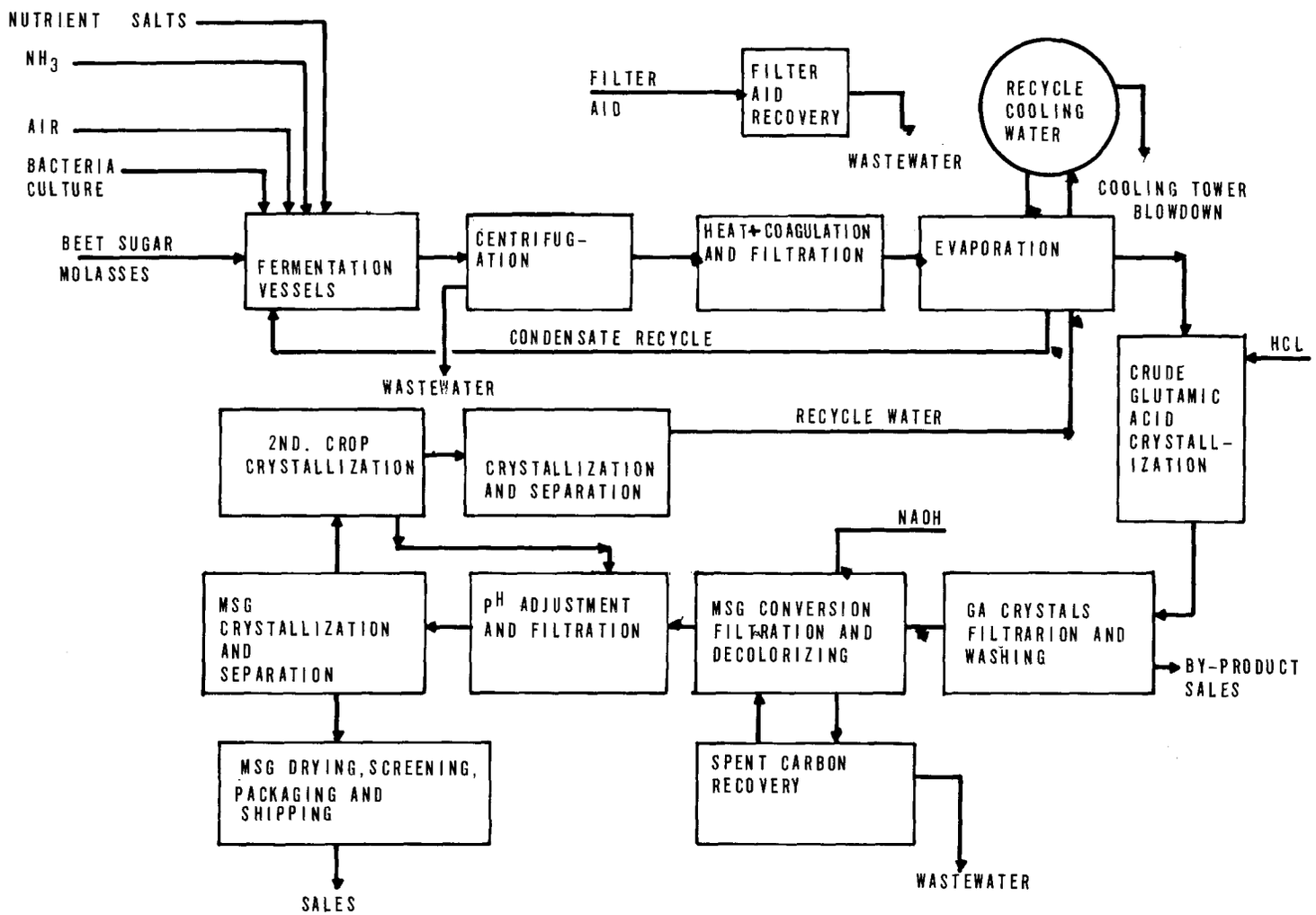

The aerobic fermentation of the sugar beet molasses occurs in a jacketed vessel, which is either steam-heated or water-cooled to maintain temperature. The cooling water may be recirculated without organic pickup. The pH of the fermenting liquor is monitored and controlled by ammonia addition. The added ammonia also supplies the amino group in the product formulation and supplements the nitrogen content of the raw molasses for bacteria culture growth. The surplus air from the fermentation vessels contain odorous compounds; therefore, these gases are sent to the boilers for air makeup, and the odorous materials are thermally destroyed.

At the completion of the fermentation reaction, the bacteria cell mass (cell cream) is separated via centrifuges and discarded (point No. 2). This cell mass represents the most significant part of the raw waste load. The high pollutant loading and commensurate high substrate content of this waste stream make it a prime candidate for by-product recovery and sale.

The clarified centrate is heat treated to precipitate miscellaneous proteinaceous material. The precipitated material and any fugitive cell mass are then removed via vacuum filtration. The resulting sludge is cyclone classified to recover most of the filter aid material. The waste stream (point B, appcor cyclone overflow) is characterized as heavily contaminated with inert and organic suspended solids. Intermittent discharge of filter precoat material impacts considerably on the RWL for all parameters measured (point No. 3).

The clarified filtrate (glutamic acid solution) is concentrated via a two-stage evaporation process. The condensate of the first effect is recycled as water make-up to the fermentation process. The second-stage vapors are condensed in barometric contact condensers. The barometric condenser system is serviced with recirculated cooling-tower water. The blowdown (point No. 7) from this cooling-tower system was found to be highly contaminated with materials exerting a significant biochemical oxygen demand.

The concentrated glutamic acid (GA) solution is treated with concentrated hydrochloric acid to a pH of 3.2, the isoelectric point of GA. The GA is crystallized out of solution, filtered, and washed. The wash water, which represents the major blowdown of impurities from the system, is recovered and sold as an animal feed supplement, "Dynaferm". The primary constituent of Dynaferm is GA, but it also contains many other salts and proteinaceous

impurities which escape the heat coagulation/ filtration treatment. This stream was not sampled during the data-gathering survey, but its recovery and sale probably impact very favorably in reducing the RWL.

The GA crystals are then solubilized and partially converted to MSG with caustic. The GA/MSG solution is decolorized with activated carbon. The spent carbon is recovered and thermally regenerated; this represents a significant in-process pollution control measure because the color bodies and other adsorbed impurities are oxidized in the regeneration furnace. There are three small water discharges (points No. 4, 5 and 6) which do not significantly impact on the RWL.

Potential odors in the exhaust gases from the carbon regeneration facilities are oxidized via a thermal afterburner. The three discharges (point D) from the carbon regeneration are significant in volume but contribute little of any of the pollutants monitored during the survey.

Further downstream processing includes: pH adjustment, filtration, MSG crystallization, and separation of water and GA. These streams are recycled in order to retain valuable product and by-product materials.

The results of combining the two grab composites of all major contributing sources to waste water discharges yielded values which compare to 62 percent and 11 percent BOD5 occurrence probability of the historical data; this indicates that the samples are representative of the MSG production facility surveyed.

The RWL can be reduced significantly from those levels of pollutants measured during the data gathering survey. The approach with the greatest potential for reducing the RWL is the recovery and sale of cell cream (point No. 2) for animal feed. It is not possible to mark the impact of cell cream recovery precisely, but it is estimated that approximately 20 to 50 percent of the suspended solids RWL could be removed. A somewhat similar impact on the organic and oxygen-demanding parameters would also be experienced. The prospects for recovery of this material depend on the development of nearby markets and favorable economics.

The recovery of the precoat waste water (point No. 3) is also an attractive alternative to discharge. This material, soluble and suspended, could be recirculated to achieve almost total recovery.

The RWL for MSG production during the survey and the estimated impact on RWL in regard to recovery of cell cream and precoat wastes are shown in the following tabulation:

	Sample Period #1	Sample Period #2	RWL after Reduction
PROCESS FLOW			
liter/kkg	67,000	67,000	62,200
gal/m lb	8,030	8,020	7,460
BOD5 RWL			
mg/liter[1]	1,510	1,020	980
kg/kkg[2]	101	68.4	61
COD RWL			
mg/liter[1]	4,060	4,410	3,600
kg/kkg[2]	272	296	224
TOC RWL			
mg/liter[1]	1,360	1,350	1,090
kg/kkg[2]	91.4	90.5	67

[1] Raw waste concentrations are based on unit weight of pollutant per volume of process waste waters.
[2] Raw waste loading are based on unit weight of pollutant per 1,000 units of products.

Product: Tannic Acid

Process: Extraction of Natural Vegetable Matter

Process RWL Subcategory: D

Tannic Acid, a glucoside of gallic acid, can be obtained by extraction of natural vegetable matter with water. The water extract is then concentrated and upon drying yields technical tannin, which is used as a mordant in dyeing and as a source of gallic acid. Extraction of nutgalls with alcohol or other bleachings, or extraction with mild reducing agents (such as sodium bisulfite) and evaporation of the extract yield medicinal grade tannin. Tannic acid is commonly used for burns, as an astringent, in gargles, and to precipitate proteins in wineries and breweries.

Figure 4-50 shows a typical flow diagram for tannic acid manufacture. The raw materials (natural nutgalls) are fed into the preparation section and ground into small pieces. The ground material is then batchwise extracted with an organic solvent. The slurry raffinate phase is diluted with water, put through a steam stripper for solvent recovery, and discharged into the sewer. The extract phase, a mixture of organic solvent, extracted material, and a small amount of water, is steam stripped for removal of the solvent. The solvent is then condensed and recycled to the extraction step.

The steam-stripped aqueous solution containing tannic acid is cooled and passed through a filter press for removal of suspended solids. The filtrate (containing tannic acid) is concentrated in an evaporator before final drying and packaging. The evaporation step employs steam jets to pull a vacuum, and the gases are subsequently condensed in barometric condensers. Waters from the barometric leg are recycled to the cooling towers for reuse.

The major pollution source from the process is the slurry waste stream withdrawn as the bottom of the raffinate stripper. The intermittent reactor washings, as well as "battery limits" clean-up, also contribute to the RWL of the process. The amounts of contaminants were estimated to be 5 percent of that of the major waste stream. The results of the sampling survey are summarized in the following tabulation.

FIGURE 4-50

TANNIC ACID- EXTRACTION OF NATURAL VEGETABLE MATTER

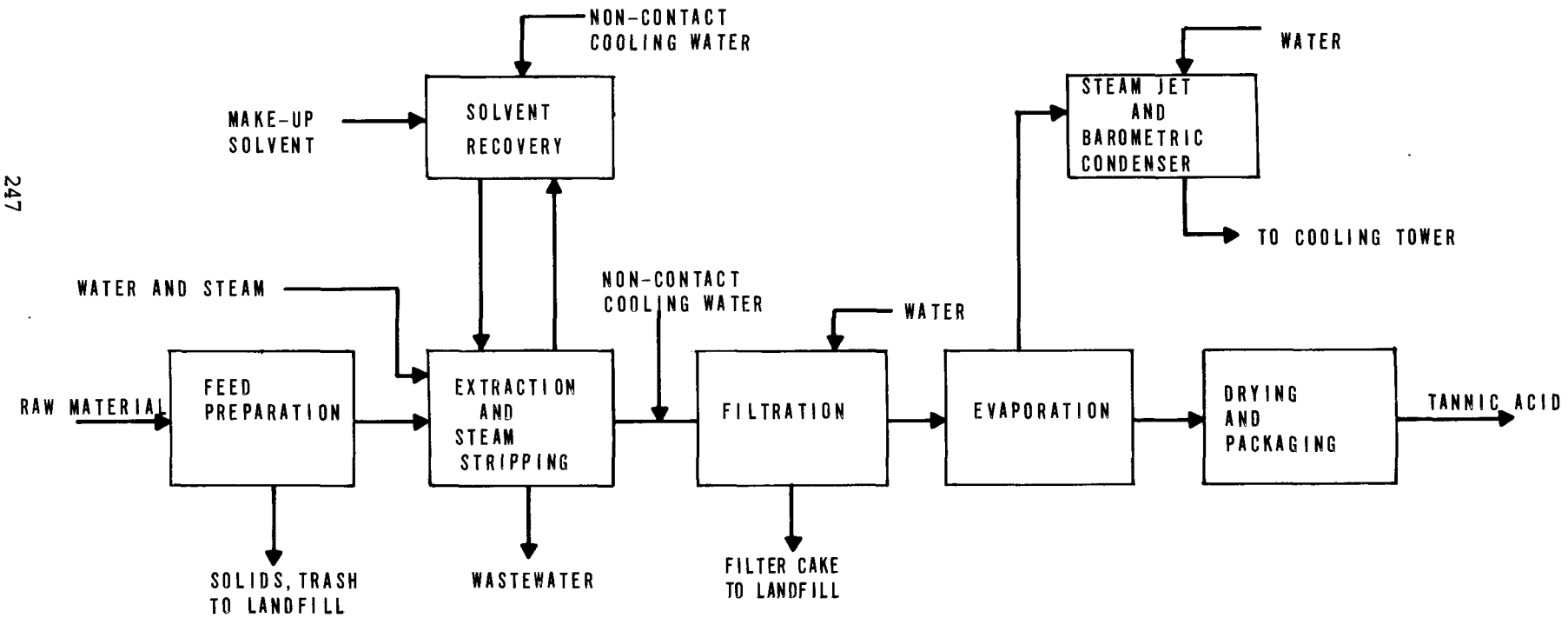

	Tannic Acid		
	Sample Period #1	Sample Period #2	Sample Period #3
PROCESS FLOW			
liter/kkg	10,000	10,000	10,000
gal/M lb	1,200	1,200	1,200
BOD5 RWL			
mg/liter[1]	16,100	14,700	15,100
kg/kkg[2]	161	147	151
COD RWL			
mg/liter[1]	109,000	99,400	112,000
kg/kkg[2]	1,093	995	1,120
TOC RWL			
mg/liter[1]	14,000	16,800	21,000
kg/kkg[2]	140	168	210

[1]Raw waste concentrations are based on unit weight of pollutant per unit volume of process waste water.
[2]Raw waste loadings are based on unit weight of pollutant per 1,000 unit weight of product.

The water from the barometric condensers in the evaporation step was not included in the foregoing RWL calculations. Since the organics in the evaporation step are not volatile, the pollutant loading in the barometric water is low. Furthermore, this water has been totally recycled for reuse in the process.

The analytical results indicate that the high RWL of this process is attributable to the high amounts of suspended organic vegetable matter present in the slurry stream. The removal of suspended solids from this stream can substantially reduce the RWL of the process. As was indicated during the sampling survey, the following three possible methods for removal/disposal of suspended solids are being investigated.

1. Filtration and landfill disposal of Suspended Solids (SS).

2. Filtration and incineration of SS.

3. Filtration and recycle of SS into other industrial and/or agricultural uses.

The RWL of the process should be based on the amounts of contaminants in the filtrate, and is subject to further investigation. Noncontact cooling water is employed in the solvent recovery area and prior to filtration. The total quantity of noncontact cooling water is estimated to be approximately 641 lbs per lb of product.

Product: Vanillin

Process: Alkaline oxidation of spent sulfite liquor

Process RWL Subcategory: D

Chemical Reactions:

$$\text{Spent sulfite liquor} + O_2 + NaOH \longrightarrow C_6H_3\ (OCH_3)\ \ (CHO)\ OH$$

(lignosulfonic acid) vanillin

Vanillin is one of the most widely used food flavors. It is also used in perfumery and in the deodorizing of manufactured goods. During the plant visit, company representatives indicated that approximatley one- third of the vanillin produced at this plant is used for flavor manufacture, with the remaining two-thirds used for perfumes and other miscellaneous items.

A typical process flow diagram for the manufacture of vanillin is shown in Figure 4-51.

Waste sulfite liquor containing about 15 percent sulfite solids (mainly lignosulfonic acid), supplied by paper mills, is treated with lime in a series of three tanks. In the first stage (pH = 10.5) calcium sulfate (principally) precipitates. In the second, the pH is increased to 12.0 to precipitate calcium lignosulfonate. In the third a further excess of lime is added. Thickened liquors from the third stage are then reused as a supplementary lime source in the first tank. The precipitated calcium lignosulfonate from the second tank is filtered under vacuum, and redissolved in a caustic soda solution to yield a solution containing 3.5 percent lignin solids and 10 percent caustic soda.

The alkaline solution is then pumped to a falling-film contactor countercurrent to a carefully controlled flow of air, which oxidizes the sulfonate to sodium vanillate. In one application of the process, the oxidation reaction is carried out at 1,500 psi and 225°C. Residence time of the liquid in the contactor is on the order of 4 minutes. The overall liquor-oxygen ratio equals 0.02 volumes of liquor per volume of air (STP). At these conditions, an 18 to 20 percent conversion of lignin to vanillin is effected, and minimum overoxidation is minimized. Because the reaction is exothermic, the temperature of the effluent liquor rises to about 250°C. The vanillate from the oxidizer is then

FIGURE 4-51

VANILLIN — ALKALINE OXIDATION OF SPENT SULFURIC LIQUOR

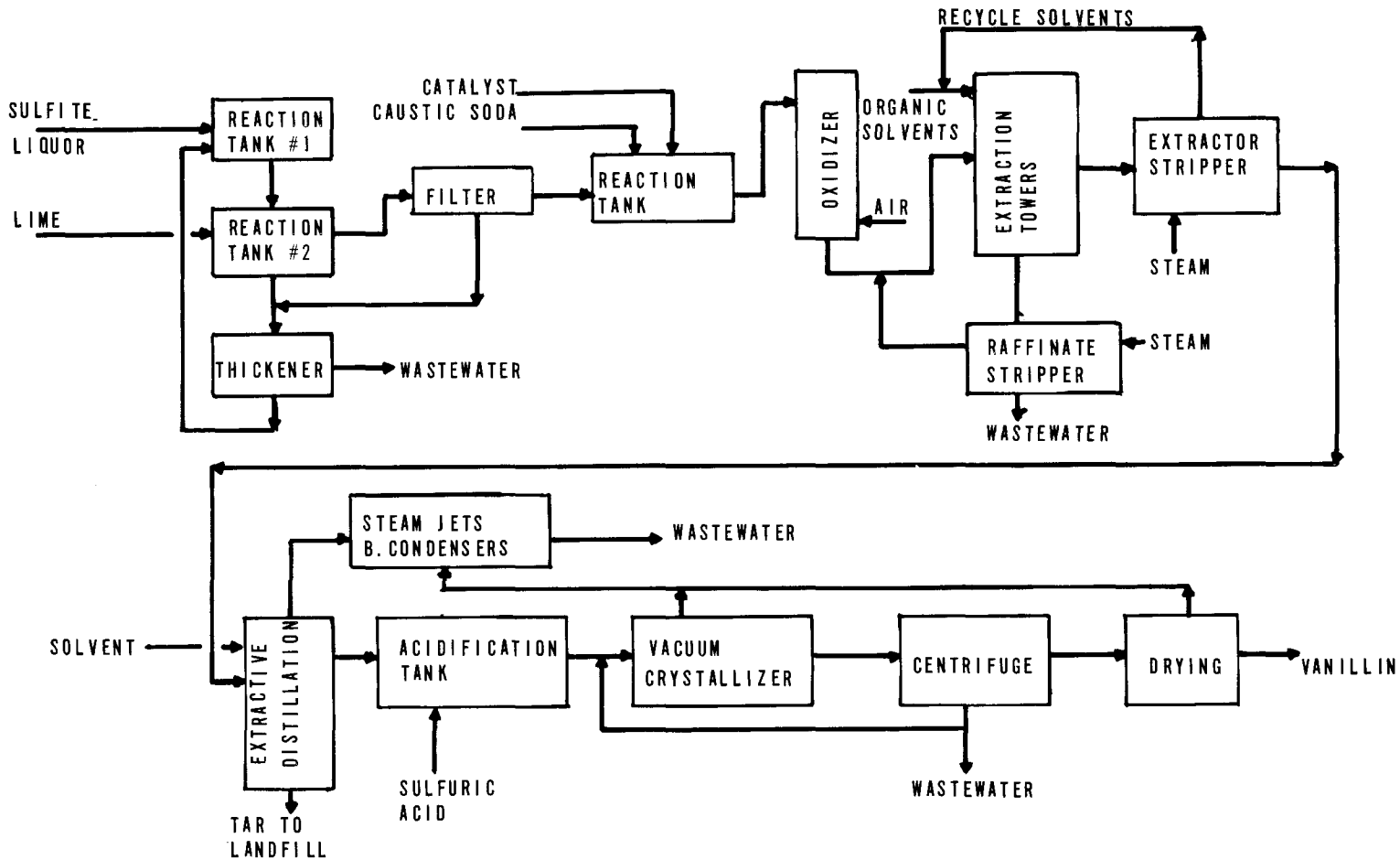

extracted with organic solvents, such as butane or isopropanol, in a conventional one- or two-stage countercurrent process. Both the extracted and raffinate phases are steam stripped to recover, respectively, organic solvents and vanillate, which are then recycled back to the process line. The vanillate separated from the organic solution is further purified by vacuum extractive distillation followed by acidification. Vanillin is then recovered by vacuum crystallization, centrifuging, and vacuum tray-drying.

The air oxidation process described has replaced a former process in which nitrobenzene was used as the oxidizing agent. Also, a Canadian plant has installed an air oxidation process similar to that described, but with lime replacing caustic as the alkaline agent. Other differences are the use of carboyhydrate-free waste sulfite liquor from an alcohol plant, the use of toluene as the extracting agent, and vacuum distillation to separate vanillin from contaminating by-products.

The major pollution sources of the process are waters discharged from the pretreatment of sulfite solution, the raffinate stripper, the centrifuge filtration, and the steam jets connected with the barometric condensers. Process RWL's calculated from the flow measurements and analyses of the aforementioned waste streams are presented in the following tabulation.

	Sample Period #1	Sample Period #2
PROCESS FLOW		
liter/kkg	133,000	133,000
gal/M lb	15,900	15,900
BOD5 RWL		
mg/liter[1]	17,900	17,500
kg/kkg[2]	2,380	2,320
COD RWL		
mg/liter[1]	118,000	116,000
kg/kkg[2]	15,600	15,400
TOC RWL		
mg/liter[1]	30,400	29,900
kg/kkg[2]	4,030	3,960

1Raw waste concentrations are based on unit weight of pollutant per unit volume of process waste waters.

2Raw waste loadings are based on unit weight of pollutant per 1,000 unit weights of product.

The high raw waste loads shown in the tabulation may be explained by the fact that spent sulfite liquor is a waste product from paper mill operations producing only 15 to 20 percent yield to vanillin. The remaining unusable spent sulfite liquor must be discharged as a waste. The analytical results also indicate that, in addition to the parameters shown in the tabulation, pollution parameters such as dissolved solids, sulfate, and phenol concentrations may be at levels potentially hazardous to biological treatment processes.

An average for the two sampling periods was used was the basis for BPCTCA.

The primary noncontact waste water flows are cooling tower and boiler blowdown. Samples of the boiler blowdown have been taken, and the flow has been estimated. Samples of the cooling tower blowdown were not taken, because typical analyses were not available and the flows are highly variable. The cooling tower make-up averages approximately 120 gpm and the cooling water makes approximately 3 cycles. A phosphate corrosion inhabitor and a biocide are added to the make-up.

SECTION V

WASTE CHARACTERIZATION

The process RWL data obtained for each of the 55 Secondary Organic Products were discussed previously in Section IV - Industry Categorization. These descriptions related the raw waste flows and loadings to specific sources such as chemical conversions and unit operations within each product-product grouping. The discussions in this section relate to the RWL values assigned to each product/process, and compare waste loadings and concentrations between product/processes.

The RWL data for each product/process shown in Tables 5-1, 2, 3, and 4 have been inserted in the major process Subcategories A, B, C, and D. For orientation, concentrations have been calculated for each parameter by dividing the raw waste loading by the corresponding contact process waste water flow. Examination of these data indicates quite a large spread in flows, loadings, and resulting concentrations. These values include the following parameters:

Process Waste Water Flow (liters/kkg of product)
BOD Raw Waste Load (kg BOD/kkg of product)
COD Raw Waste Load (kg COD/kkg of product)
TOC Raw Waste Load (kg TOC/kkg of product)

Although the sampling data indicate that in some cases there is considerable variation between two manufacturers who nominally operate the same process, and between different time sampling periods for the same manufacturers, it was necessary to specify one set of values for each product-process grouping. This was done in the most equitable manner possible from the data available. Rather than arbitrarily choosing the lowest observed value for each product-product grouping, an effort was made to choose values which represent the most complete and reliable data base. Other factors such as the application of good housekeeping and in-process controls were also considered in selecting the raw waste loads values for each product/process. In cases where alternate means of disposal are used, such as in the use of deep wells, the total raw wastes were accounted for as input to the model BPCTCA biological treatment system. Thus, limitations for processes where deep wells or other alternate disposal

methods are used would apply in the situation where these alternate disposal methods were no longer feasible.

The BOD concentrations shown are based on waste waters coming directly from the process and do not necessarily represent the waste concentrations which a typical single stage biological waste treatment plant would accept. If the plant manufactured a single product which generated concentrated wastes, these may be diluted with steam condensate or other noncontact waters prior to biological treatment depending upon the design and management of the plant in question. In a multi-product plant, the concentrated waste water could be diluted with less concentrated wastes from other processes. In almost all instances, the actual treatment plant which accomplishes waste reduction will be accepting the combined wastes from multiple processes, whose overall concentrations are lower, because of the addition of waste waters from product/processes of smaller loads and slightly contaminated waste waters such as steam condensate, pump seals, etc.

Those 27 product/processes which were selected for effluent limitations guidelines are included in Table 5-1 thru 5-4. As indicated in an earlier section of this report, the Phase II effluent limitations for organic chemicals involve process-by-process determinations. This approach differs from that taken in Phase I where process raw waste loads from processes with similar raw waste loads were combined and averaged. Effluent limitations were then derived by application of a reduction factor or concentration to the average or mean raw waste load for the group of processes.

TABLE 5-1

Major Subcategory A Process Raw Waste Loads

Product	Process Description	Process Raw Waste Loads			
		Flow	BOD5	COD	TOC
		l/kkg	kg/kkg (mg/l)	kg/kkg (mg/l)	kg/kkg (mg/l)
BTX Aromatics	Fractional Distillation	46.7	0.015 (322)	0.053 (1137)	0.015 (328)
Cumene	Alkylation of Benzene with Propylene	--	--	--	--
p-Xylene	Isomerization, Crystallization, and Filtration of mixed Xylene	44.3	0.01(238)	0.025(580)	0.007(159)

TABLE 5-2

Major Subcategory B Process Raw Waste Loads

Product	Process Description	Process Raw waste Loads			
		Flow	BOD5	COD	TOC
		l/kkg	kg/kkg (mg/l)	kg/kkg (mg/l)	kg/kkg (mg/l)
Adiponitrile	Chlorination of Butadiene	9770	19.2 (1970)	135 (13,800)	44 (4500)
Benzoic Acid and Benzaldehyde	Catalytic Oxidation of Toluene with Air	2840	25.6 (9010)	50.8 (17,900)	19.6 (6900)
Chlorinated Methanes	Chlorination of Methyl Chloride & Methane Mixture	2800	0.22(77)	0.94(335)	0.37(132)
Chlorobenzene	Chlorination of Benzene	50	0.015 (300)	0.38 (7700)	0.24 (4780)
Chlorotoluene	Chlorination of Toluene	121,000	0.24 (2)	1.82 (15)	0.24 (2)
Diphenylamine	Deamination of Aniline	526	0.087(164)	0.31 (600)	0.23 (430)
Hexamethylene Diamine	Hydrogenation of Adiponitrile	1,010	3.97 (3930)	21.1 (20,900)	5.15 (5100)
Hexamethylene Diamine	Ammonolysis of 1,6 - Hexanediol	1,100	4 (3640)	11.7 (10,600)	2.5 (2260)
Maleic Anhydride	Oxidation of Benzene	2,300	108 (47,000)	287(126,000)	120 (52,500)
Methyl Chloride	Esterification of Methanol with Hydrochloric Acid	583	0.92(1569)	67.8(116,300)	17.6 (30,270)
Methyl Ethyl Ketone	Dehydrogenation of Sec. - Butyl Alcohol	1,310	3.92 (3000)	2.1 (1630)	0.68 (520)
Perchloroethylene	Chlorination of Chlorinated Hydrocarbons	5,400	0.44 (80)	2.83 (525)	0.17 (30)
Phthalic Anhydride	Oxidation of Naphthalene		Incinerated		
Phthalic Anhydride	Oxidation of o-Xylene	593	0.13 (215)	0.64 (1080)	0.02 (34)
Tricresyl Phosphate	Condensation of Cresol and Phosphorus Oxychloride	28,000	1.12 (40)	11.4 (410)	1.96 (70)

TABLE 5-3

Major Subcategory C Process Raw Waste Loads

Product	Process Description	Process Raw Waste Loads			
		Flow	BOD5	COD	TOC
		l/kkg	kg/kkg (mg/l)	kg/kkg (mg/l)	kg/kkg (mg/l)
Acetic Esters					
Ethyl Acetate	Esterification of Ethyl Alcohol with Acetic Acid	1,299	0.049 (38)	0.102 (79)	0.034 (26)
Propyl Acetate	Esterification of Propyl Alcohol with Acetic Acid	1,190	0.008 (7)	0.012 (10)	0.005 (4)
Acrylonitrile	Ammoxidation of Propylene	4,470	38.7(8620)	133(32,800)	57.5(14,400)
p-Aminophenol	Catalytic Reduction of Nitrobenzene	12,600	41.6 (3300)	73.7 (5850)	21.7 (1730)
Calcium Stearate	Neutralization of Stearic Acid	54,100	13.8 (255)	32.8 (605)	23.1 (430)
Caprolactam	DSM Caprolactam Process	29,100	47.1 (1620)	93 (3200)	--
Cyclohexanone Oxime	Hydroxylamine Process	1910	--	6.29 (3300)	--
Cresol, Synthetic	Methylation of Phenol	334	47.7 (143,000)	101 (303,000)	34.7 (104,000)
Formic Acid	Hydrolysis of Formamide	135,000	1.05(7.8)	4.5 (33)	1.4 (10)
Hexamethylene Tetramine	Synthesis with Ammonia	3,200	9.2(2875)	29.4 (9200)	9.8 (3060)
Hydrazine Solutions	The Raschig Process and Formaldehyde	30,300	9.09 (300)	115 (3800)	0.18 (6)
Isobutylene	Extraction from a Mixture of C4 Hydrocarbons	20,400	13.6 (670)	64.1 (3150)	12.9 (630)
Isopropanol	Hydrolysis of Propylene	2,540	0.99 (393)	2.99 (1130)	1.32(520)
Oxalic Acid	Nitric Acid Oxidation of Carbohydrates	436,000	1.31 (3)	4.36 (10)	1.31 (3)
Pentaerythritol	Aldehyde Condensation	10,200	390 (38,100)	1580 (155,000)	830 (81,200)
Propylene Glycol	Hydrolysis of Propylene Oxide	5,500	0.016 (3)	0.055 (10)	0.006 (1)
Propylene Oxide	Chlorohydrin Process	63,500	31.5 (495)	143 (2250)	22.7(355)
Saccharin	Synthesis from Phthalic Anhydride Derivatives	269,000	253 (940)	879 (3270)	384 (1430)
Sec. Butyl Alcohol	Sulfonation and Hydrolysis of Mixed Butylenes	626	14.2 (22,800)	38.8 (62,000)	23.9 (38,300)

TABLE 5-4

Major Subcategory D Process Raw Waste Loads

Product	Process Description	Process Raw Waste Loads			
		Flow	BOD5	COD	TOC
		l/kkg	kg/kkg (mg/l)	kg/kkg (mg/l)	kg/kkg (mg/l)
Citric Acid	Fermentation of Molasses	477,000	328 (690)	657 (1380)	242 (507)
Citronellol and Geraniol	Citronella Oil Distillation	10,000	58.1(5810)	111 (11,000)	37.7(3770)
Dyes and Dye Intermediate	Batch Manufacture	947,000	248 (260)	1219 (1290)	450 (475)
Fatty Acids	Hydrolysis of Natural Fats	28,000	16.1 (575)	39.6 (1410)	9.8 (350)
Fatty Acid Derivatives		6,400	18 (2810)	27.9 (4360)	8.47(1320)
Ionone and Methylionone	Condensation and Cyclization of Citral	9,370	24 (2600)	98 (10,000)	34 (3600)
Methyl Salicylate	Esterification of Salicylic Acid with Methanol	1,735	22 (12,680)	93.9 (54,100)	37.9 (21,800)
Miscellaneous Batch Chemicals		78,700	24.1 (306)	101 (1280)	31.4 (400)
Monosodium Glutamate	Fermentation of Beet Sugar Molasses	62,200	61 (980)	224 (3600)	67 (1090)
Naphthenic Acid	Extraction and Acidification of Caustic Sludge from Petroleum Refinery	39,800	141 (3550)	298 (7500)	104 (2630)
o-Nitroaniline	Ammonolysis of o-Nitrochlorobenzene	269,000	16 (61)	105 (390)	30.9 (105)
p-Nitroaniline	Ammonolysis of p-Nitrochlorobenzene	39,100	2.55 (65)	79.1 (2030)	22.2 (570)
Pentachlorophenol	Chlorination of Phenol	2,960	0.94 (318)	17.5(5880)	2.29 (775)
Pigments	Diazotization and coupling of amine, sulfuric, etc.				
Toners		313,000	570 (1820)	1920 (6100)	207 (660)
Lakes		1,000,000	1470 (1470)	4930 (4930)	820 (820)
Plasticizers	Condensation of Phthalic Anhydride	650	54 (82,600)	82.6 (127,000)	33.4 (51,400)
Tannic Acid	Extraction of Natural Vegetable Matter	10,000	153 (15,300)	1070 (107,000)	173 (17,300)
Vanillin	Alkaline Oxylation of Spent Sulfite Liquor	133,000	2350 (17,700)	15,500(117,000)	4000 (30,200)

SECTION VI

SELECTION OF POLLUTANT PARAMETERS

Twenty-eight parameters were examined during the field data collection program. These parameters are listed in Table 6-1, and all field sampling data are summarized in Supplement B. Based on the degree of impact on the overall environment, the pollutants which are applicable to control and treatment were then determined.

The rationale and justification for the major pollutants are discussed. This discussion will provide the basis for selection of parameters upon which the actual effluent limitations were postulated and prepared. These pollutants parameters for which no effluent limits were established, but which may be of concern to water quality in certain locations, are also discussed.

Pollutants observed from the field data that were present in sufficient concentrations so as to interfere with, be incompatible with, or pass inadequately treated through publicly-owned works are discussed in Section XII.

RATIONALE FOR SELECTION OF IDENTIFIED PARAMETERS

5-Day Biochemical Oxygen Demand (BOD5)

This parameter is an important measure of the oxygen consumed by microorganisms in the aerobic decomposition of the wastes at 20°C over a five-day period. More simply, it is an indirect measure of the biodegradability of the organic pollutants in the waste. BOD5 can be related to the depletion of oxygen in the receiving stream or to the requirements of the waste treatment. Low BOD5 values in the raw waste are frequently the result of the dilutional effects of non process waters or less contaminated waste streams. High values are due to a combination of factors, such as undiluted condenser waters, frequent spills, and a relatively large amount of drainage of high strength liquids from the raw material.

Biochemical oxygen demand (BOD) is a measure of the oxygen consuming capabilities of organic matter. The BOD does not in itself cause direct harm to a water system, but it does exert an indirect effect by depressing the oxygen content of the water. Sewage and other organic effluents during their processes of decomposition exert a BOD, which can have a catastrophic effect on the ecosystem by depleting the oxygen

Table 6-1

List of Pollutants and Indicators of Pollution
Examined for the Organic Chemicals Industry

Chemical Oxygen Demand	Total Dissolved Solids
Biochemical Oxygen Demand	Chlorides
Total Organic Carbon	Hardness - Total
Total Suspended Solids	Total Phosphorus
Oil (Freon extractables)	Calcium
Ammonia Nitrogen	Magnesium
Total Kjeldahl Nitrogen	Zinc
Phenol	Copper
Cyanide - Distillation	Iron
Color	Chromium - Total
Sulfate	Cadmium
pH	Colbalt
Acidity	Lead
Alkalinity	Nickel
Chlorine, residual	Vanadium

supply. Conditions are reached frequently where all of the oxygen is used and the continuing decay process causes the production of noxious gases such as hydrogen sulfide. Water with a high BOD indicates the presence of decomposing organic matter and possible high bacterial counts that degrade its quality and potential uses.

If the BOD_5 of the final effluent of an organic chemicals plant discharged into a receiving body is too high, it will reduce the dissolved oxygen level in that stream to below a level that will sustain most fish life; i.e., below about 4 mg/l. Many states currently restrict the BOD_5 of effluents to below 20 mg/l if the stream is small in comparison with the flow of the effluent. A limitation of 200 to 300 mg/l of BOD_5 is often applied for discharge to a municipal sewer, and surcharge rates often apply if the BOD_5 is above the designated limit.

If a high BOD is present, the quality of the water is usually visually degraded by the presence of decomposing materials and algae blooms which result from the decomposition and oxidation of the organic matter.

A 20-day biochemical oxygen demand (BOD_{20}), sometimes called "ultimate" BOD is usually a better measure of the waste load than BOD_5. However, the test for BOD_{20} requires 20 days to run, and is an impractical measure for most purposes.

Dissolved oxygen (DO) is a water quality constituent that, in appropriate concentrations, is essential not only to keep organisms living but also to sustain species reproduction, vigor, and the development of populations. Organisms undergo stress at reduced DO concentrations that make them less competitive and able to sustain their species within the aquatic environment. For example, reduced DO concentrations have been shown to interfere with fish population through delayed hatching of eggs, reduced size and vigor of embryos, production of deformities in young, interference with food digestion, acceleration of blood clotting, decreased tolerance to certain toxicants, reduced food efficiency and growth rate, and reduced maximum sustained swimming speed. Fish food organisms are likewise affected adversely in conditions with suppressed DO. Since all aerobic aquatic organisms need a certain amount of oxygen, the consequences of total lack of dissolved oxygen due to a high BOD can kill inhabitants of the affected area.

The accepted method for BOD analyses is described in the Standard Methods for the Examination of Water and Waste Waters published by the American Public Health Association.

The BOD test is a biochemical test for which microorganisms are used to oxidize the organic matter in the wastewater. Standard Methods notes that for certain industrial wastes, more meaningful results may sometimes be realized by the use of specialized seed material containing organisms adapted to the use of the organic compounds present. The use of acclimated seed does not always result in more meaningful results or higher numerical values. Data using specific organic chemicals indicated that the use of acclimated seed can result in lower BOD values than were obtained by using non-acclimated seed.

The BOD analyses obtained as part of the sampling conducted during this study were run using reasonable and prudent steps to evaluate and overcome any potential problems due to acclimation of seed. The technique that was used in this study was compared with that used by the laboratory of one of the large organic chemical industries. The comparison was good.

BOD_5 is included in the recommended effluent limitations because its discharge to a stream is harmful to aquatic life since it depletes the oxygen supply. It is also the parameter most widely used by the industry to characterize its untreated and treated wastes and is an important parameter in the design of biological waste treatment systems.

Chemical Oxygen Demand (COD)

COD is another measure of oxygen demand. It measures the oxygen required to oxidize organic (and some inorganic) pollutants under a carefully controlled direct chemical oxidation by a dichromate sulfuric acid reagent using specific catalysts.

COD is a much more rapid measure of oxygen demand than BOD_5, and is potentially very useful. However, it does not have the same significance, and at the present time cannot be substituted for BOD_5, because COD:BOD_5 ratios vary with the types of wastes. The COD measures more than only those materials that will readily biodegrade in a stream and, hence, deplete the stream's dissolved oxygen supply.

A major disadvantage is that the COD test does not differentiate between biodegradable and nonbiodegradable organic material. In addition, the presence of inorganic reducing chemcials (sulfides, etc.) and chlorides may interfere with the COD test.

Standard Methods, the principal reference for analytical work in this field, cautions that aromatic compounds and straight-chain alphatic compounds, both prevalent in the organic chemicals industry, are not completely oxidized during the COD test. The addition of silver sulfate, a catalyst, aids in the oxidation of the straight-chain alcohols and acids but does not affect aromatic hydrocarbons. The exact extent of this partial oxidation has not been documented in the literature.

COD provides a rapid determination of the waste strength. Its measurement will indicate a serious plant or treatment malfunction long before the BOD5 can be run. A given plant or waste treatment system usually has a relatively narrow range of COD:BOD5 ratios, if the waste characteristics are fairly constant, so experience permits a judgment to be made concerning plant operation from COD values.

The organic chemicals industry does produce chemicals which may be in the effluent from a secondary treatment plant and which can be a source of chemicals in the environment that can be hazardous to humans, animals, and aquatic life. These chemicals can be effectively reduced by incorporating the COD limit in the industry effluent limitation.

The COD test measures the presence of both rapidly biodegradable and less biodegradable oxygen-demanding matter. For a specific waste, the difference between the measured BOD and COD value is an index of the oxygen demand of organic matter which is resistant to short term biodegradation. While the laboratory conditions employed in the COD test will not be found in a receiving stream, a portion of the oxygen demand measured by the COD will be exerted in the receiving stream. It is the latter oxygen demand that is of concern in water pollution control activities and which requires control, especially in an industry where many residues may not degrade rapidly.

The COD test is a reasonable index for the presence of organic chemicals in a waste or effluent, is a reasonable estimate of the ultimate oxygen demand of the wastes from this industry, and can be a measure of hazardous materials in the environment.

Effluent limitations guidelines were established for the COD pollutant parameter for BATEA. Its use for BPCTCA and New Sources is not precluded if a suitable correlation with BOD5 is established.

Total Organic Carbon (TOC)

TOC is a measure of the amount of carbon in the organic material in a waste water sample. The TOC analyzer thermally oxidizes a small volume of sample at 150°C. The carbon dioxide from the combustion chamber is condensed and sent to an infrared analyzer, where the carbon dioxide is monitored. This carbon dioxide value corresponds to the total inorganic value. Another portion of the same sample is thermally oxidized at 950°C, which converts all the carbonaceous material to carbon dioxide; this value corresponds to the total carbon value. TOC is determined by subtracting the inorganic carbon from the total carbon value. Only organic matter capable of being incorporated into the small sample volume (approximately 40 millimeters) can be measured. Primarily soluble and colloidal organic material can be measured by this analysis.

The TOC value is affected by any one or more of the following:

1. The water vapor may be only partially condensed and may appear in the infrared adsorption band of carbon dioxide and can therefore inflate the reported value.

2. The sample volume involved in the TOC analyzer is so small (approximately 40 microliters) that it can easily become contaminated, with dust, for example.

3. Industrial wastes from the organic chemicals industry with low vaporization points may vaporize before 150°C and therefore be reported as inorganic carbon.

Effluent limitations were not established for the TOC parameter, although its use is not precluded if a suitable correlation with BOD_5 or COD is established. It has only been in recent years that TOC has been used as a measure of waste water quality.

Total Suspended Solids (TSS)

This parameter measures the suspended material that can be removed from the waste waters by laboratory filtration. Suspended solids are a visual and easily determined measure of pollution and also a measure of the material that may settle in tranquil or slow-moving streams. A high level of suspended solids is an indication of high BOD_5. Generally, suspended solids range from one-third to three-fourths of the BOD_5 values in the raw waste. Suspended solids are also

a measure of the effectiveness of solids removal systems such as clarifiers and fine screens.

Suspended solids frequently become a limiting factor in waste treatment when the BOD_5 is less than about 20 mg/l. In fact, in highly treated waste, suspended solids usually have a higher value than the BOD_5, and in this case, it may be easier to lower the BOD_5 even further, perhaps to 5 to 10 mg/l, by filtering out the suspended solids. Suspended solids in the treated waste waters generally correlate well with BOD_5, COD, and total volatile solids.

Suspended solids also may inhibit light penetration and thereby reduce the primary productivity of algae (photosynthesis). Because of the strong impact suspended solids can have on receiving waters, suspended solids were included in the effluent limitations recommended in this report.

Suspended solids include both organic and inorganic materials. The inorganic components include sand, silt, and clay. The organic fraction includes such materials as grease, oil, and various organic matter from the manufacturing process. These solids may settle out rapidly and bottom deposits are often a mixture of both organic and inorganic solids. They adversely affect fisheries by covering the bottom of the stream or lake with a blanket of material that destroys the fish-food bottom fauna or the spawning ground of fish. Deposits containing organic materials may deplete bottom oxygen supplies and produce hydrogen sulfide, methane, and other undesirable gases.

In raw water sources for domestic use, state and regional agencies generally specify that suspended solids in streams shall not be present in sufficient concentration to be objectionable or to interfere with normal treatment processes. Suspended solids in water may interfere with many industrial processes, and cause foaming in boilers, or encrustations on equipment exposed to water, especially as the temperature rises. Suspended solids are undesirable in water for textile industries, paper and pulp, beverages, dairy products, laundries, dyeing, photography, cooling systems, and power plants. Suspended particles also serve as a transport mechanism for pesticides and other substances which are readily sorbed into or onto clay particles.

Solids may be suspended in water for a time, and then settle to the bed of the stream or lake. These settleable solids discharged with man's wastes may be inert, slowly biodegradable materials, or rapidly decomposable substances.

While in suspension, they increase the turbidity of the water, reduce light penetration and impair the photosynthetic activity of aquatic plants.

Solids in suspension are aesthetically displeasing. When they settle to form sludge deposits in the stream or lake bed, they are often damaging to the life in water, and they retain the capacity to displease the senses. Solids, when transformed to sludge deposits, may do a variety of damaging things, including blanketing the stream or lake bed and thereby destroying the living spaces for those benthic organisms that would otherwise occupy the habitat. When of an organic and therefore decomposable nature, solids use a portion or all of the dissolved oxygen available in the area. Turbidity is principally a measure of the light absorbing properties of suspended solids. It is frequently used as a substitute method of quickly estimating the total suspended solids when the concentration is relatively low.

TSS RWL values for the Phase 2 products surveyed are presented in Tables 6-2 through 6-5. TSS raw waste loads are generally not a significant factor in this industry. Much of the TSS eventually discharged to surface waters are biological solids which have been produced in the end-of-pipe biological treatment facilities many of which are removed before effluent discharge. The effluent limitations are partially based on a concentration value which will be attainable with adequate solids handling facilities. This subject is discussed in detail in Section VII.

Total Volatile Solids (TVS)

The total volatile solids measurement is a rough measure of the amount of organic matter in the waste water. Actually, it is the amount of combustible material in both the total dissolved solids and total suspended solids. Total volatile solids in the raw and treated waste waters from this industry generally correlate fairly well with SS, grease, and COD. Because of these correlations and because total volatile solids is a relatively easy parameter to determine, it could be used as a rapid method to determine a serious plant or treatment system malfunction. Volatile solids in receiving waters are food for microorganisms.

Effluent limitations for total volatile solids were not established because TVS will be limited by limitations on other pollutant parameters such as BOD_5 and suspended solids.

Oil

Table 6-2

Miscellaneous RWL for Subcategory A

	Phase II Data		Supplementary Phase I RWL Data				
	p-Xylene	Cumene	BTX	BTX	BTX	Ethyl Benzene	Ethyl Benzene
Flow, gal/1,000 lbs	5.25	.04	87.5	52.3	5.56	55.5	39.7
Phenol							
mg/l	.16	14.6	.155	1.98	.2	1.94	1.03
kg/kkg	.00001	Negligible	.00009	.00087	.00001	.00069	.000335
NH_3-N							
mg/l	1.0	3.4	1.27	18.0	142.7	13.2	11.8
kg/kkg	.00005	Negligible	.0010	.00785	.00662	.00546	.00387
TKN							
mg/l	3.12	8.2	4.05	49.3	322.4	18.2	105.5
kg/kkg	.00013	Negligible	.0028	.0215	.0154	.00772	.0355
CN							
mg/l		.02			.818		
kg/kkg		Negligible			.00004		
Sulfate							
mg/l	2.6	12.3	140	5,860	1,400	23.9	12.8
kg/kkg	.00011	Negligible	.0872	2.56	.0649	.0160	.00578
Oil							
mg/l	746	21	251	26	9	55	9
kg/kkg	.0327	Negligible	.709	.011	.0004	.0318	.00298
T-P							
mg/l	4.76	.005	.45	1.112	.033	.079	.0178
kg/kkg	.00021	Negligible	.00035	.00049	.00000	.00004	.00006
Zn							
mg/l	.287	.13	1.49	.116	.343	2.46	30.5
kg/kkg	.00001	Negligible	.00095	.00005	.00002	.00087	.0102
Cu							
mg/l	.44	.05	< .08	.09	.05	.18	21.5
kg/kkg	.00002	Negligible	< .00006	.00004	.00000	.00006	.00721
Fe							
mg/l	2.30	109	1.45	13.8	1.57	2.55	7.9
kg/kkg	.00010	.00003	.00090	.006	.00007	.00096	.00149
Cr-Total							
mg/l	2.50	.01	5.16	.171	.01	1.26	.807
kg/kkg	.00011	Negligible	.00315	.00008	.00000	.00089	.00027
Cd							
mg/l	< .05	.01	< .05	.127	.01	.052	.051
kg/kkg	0	Negligible	< .00005	.00006	.00000	.00003	.00002
TSS							
mg/l	17.3	100	44.5	331	9	61.5	5
kg/kkg	.00076	.00003	.0270	.1445	.0004	.0254	.00172
TDS							
mg/l	162	138	2,045	47,600	21	20,300	13,200
kg/kkg	.0711	.00004	.343	20.8	.00097	6.68	4.44
Cl^-							
mg/l	32	37	168	3,280	36	4,410	50,800
kg/kkg	.0014	.00001	.103	1.43	.00169	1.48	16.9

Table 6-3

Miscellaneous RWL for Subcategory B

Product	Flow	Phenol		NH_3-N		TKN		CN	
	gal/1000 lb	mg/l	kg/kkg	mg/l	kg/kkg	mg/l	kg/kkg	mg/l	kg/kkg
Benzoic Acid via Benzene	340	.16	.00044	< 15.3	0.043	33.5	.095	0	0
Maleic Anhydride via Benzene	788	2.10	.014	16.6	.109	16.6	.109	----	------
Maleic Anhydride via Benzene	274	1.47	.0034						
Adiponitrile	1170	.103	.00102	1,940	18.9	3,730	36.4	187	1.83
Chloromethanes	336	.03	.00007	.7	.00191	2.1	.00591	----	------
Chloromethanes	71.6	.035	.00002	1.95	.00116	6.05	.0036	----	------
Chlorotolulene	14,500	.04	.00436	-----	--------	-----	-------	----	------
Methyl Ethyl Ketone	156			< 1.4	<.0018	5.2	.0068		
Methyl Ethyl Ketone		.01	.00001	2.1	.00167	4.5	.00355		
Diphenylamine	63			15,500	8.15	16,700	8.78		
HMDA (Adiponitrile)	203	.638	.00108	4,540	7.69	4,000	6.78	.638	.00108
HMDA (Adiponitrile)	121	.073	.00073	3,080	3.1	4,400	4.44	16.7	.0202
Hexamethylene Diamene (Hexanediol)	132	.01	.00001	7,630	8.40	9,170	10.10		
Methyl Chloride	1,430	.01	.00011	.1	.0012	1.9	.0230		
Methyl Chloride	101	.07	.00006	1.9	.0016	69.3	.0585		
Methyl Chloride	69.9	.05	.00003	.55	.000325	1.9	.00110		
Perchloroethylene	642	.09	.00048	.2	.00107	4.6	.0247		
Phthalic Anhydride (o-xylene)	71.2	.21	.00013	10.4	.00618	18.8	.0112		
Tricresyl Phosphate	3,350	10.8	.304	3.65	.102	11.8	.344		
Supplementary Phase I RWL Data									
Acetone	276			0	0	1.8	.0041		
Ethylene Dichloride	28.2	.27	.00006	10.4	.0024	17.9	.0042		
Vinyl Chloride	17.0	<.01	0			4.6	.00066		
Vinyl Chloride	135	.36	.00040	.7	.00079	2.85	.00379		
Styrene	733	1.83	.0112	23.5	.143	29.8	.182		
Styrene	250	1.13	.00252	5.15	.00763	12.3	.0364		

Table 6-3
(continued)

Miscellaneous RWL for Subcategory B

Product	Fe		Cr-Total		Ca		TSS		TDS		Cl^-	
	mg/l	kg/kkg	mg/l	kg/kkg	mg/l	kg/kkg	mg/l	kg/kkg	mg/l	kg/kkg	mg/l	kg/kkg
Benzoic Acid via Benzene	.78	.00222	.076	.00022	.10	.00029	118	.334	34,900	98.9	290	.823
Maleic Anhydride via Benzene	101	.665			.42	.0028	17	.109	56,000	371		
Maleic Anhydride via Benzene	30	.069	1.74	.0040	< .05	< .00011	2,380	5.44	53,700	122	18	.0421
Adiponitrile	1.58	.0154	.0973	.000953	.161	.00156	56.3	.55	124,000	1,210	83,400	814
Chloromethanes	14.3	.0403	7.7	.0217	.050	.00014	89	.251	28,300	79.3		
Chloromethanes							1,170	.702	4,100	2.45	3,570	2.12
Chlorotolulene									467	56.5	325	39.3
Methyl Ethyl Ketone												
Methyl Ethyl Ketone	.68	.00054	.05	.00004	.05	.00004					56	.0446
Diphenylamine	.29	.000155	.05	.00003	.05	.00003	8.5	.00447	16	.00842	6,300	17.6
HMDA (Adiponitrile)	.30	.00219	.141	.00024	.05	.000085	53.5	.0905	3,600	6.10	26	.0437
HMDA (Adiponitrile)	1.11	.000113	.053	.000053	.05	.00005	4	.00404	535	.541	489	.492
Hexamethylene Diamene (Hexanediol)	.25	.00028	.027	.00003	.027	.00003			29	.0316	5,190	5.71
Methyl Chloride	5.81	.0695	.050	.00060	.052	.00062	28	.333	336	4.01	11,500	137
Methyl Chloride	18.8	.0159	.644	.00054	.050	.00004	7,100	6.001	23,500	19.8	2,760	2.330
Methyl Chloride	4.12	.0024	.088	.00005	.215	.000125	1,380	.802	117,000	68.1	------	------
Perchloroethylene	5.98	.0321	9.45	.0507	.05	.00027	25.5	.136	1,700	9.20	33,600	180
Phthalic Anhydride (o-xylene)	.5	.0003	4.01	.00238	.01	.00001	29	.0172	541	.321	92	.0547
Tricresyl Phosphate	1.31	.0366	.041	.00115	.041	.00115	4	.110	615	17.2	2,560	71.5
Supplementary Phase I RWL Data												
Acetone	37.7	.0089	.05	.00001	.10	.00002	14.5	.00341	46,000	10.8	18,900	4.45
Ethylene Dichloride												
Vinyl Chloride	2.06	.00029	.06	.00001	< .05	.00001	26	.00369	85,200	12.1	18,900	4.45
Vinyl Chloride	13.6	.0153	2.55	.00287	.05	.00006	68	.0766	13,300	15.0	11,300	12.7
Styrene	.33	.00199	.056	.00034	< .05	.00031	8.5	.0504	69.8	.263	7.7	.0472
Styrene	7.9	.00149	.015	.00002	.055	.000025	1,230	.118	42.5	.114	3.5	.0072

Table 6-3
(continued)

Miscellaneous RWL for **Subcategory B**

Product	Sulfate		Oil		T - P		Zn		Cu	
	mg/l	kg/kkg	mg/l	kg/kkg	mg/l	kg/kkg	mg/l	kg/kkg	mg/l	kg/kkg
Benzoic Acid via Benzene	36.3	.103	43	.121	.27	.00078	4.19	.012	.06	.00017
Maleic Anhydride via Benzene			482	3.17	137	.902	5.42	.036	2.20	.014
Maleic Anhydride via Benzene			2,020	4.62			.26	.00059	.17	.00039
Adiponitrile	156	1.53	1,270	12.400	12.3	.12	.328	.0032	48	.479
Chloromethanes	349	.98	12	.0335	.678	.00190	5.16	.0145	.19	.00054
Chloromethanes	2,590	10.5	0	.00017	.12	.000075	8.06	.00482		
Chlorotolulene	28.0	3.39	----	-------	-----	-------	-----	-------	.15	.0182
Methyl Ethyl Ketone	1.20	.0016	441	.576	.005	.00001				
Methyl Ethyl Ketone	1.0	.00079	280	.222	.02	.00002	.49	.00039	.08	.00006
Diphenylamine	1.0	.00053	18	.0096	1.057	.00056	.085	.000045	.05	.00003
HMDA (Adiponitrile)	5.12	.00869	1,380	2.33	.375	.000635	74.5	.000125	.185	.00032
HMDA (Adiponitrile)	15.7	.0158	1,270	12.3	2.03	.00205	.28	.000283	.05	.00005
Hexamethylene Diamene (Hexanediol)	.538	.00059	36	.0398	.212	.00023	.022	.00002	.08	.00003
Methyl Chloride	3,020	36	460	5.500	.057	.00068	14	.168	.07	.00084
Methyl Chloride	482	8.85	33	.0278	.172	.00015	23.6	.200	26.3	.0223
Methyl Chloride	5,800	446	121	.0707	.039	.00002	33.8	.0198	.125	.000075
Perchloroethylene	6,840	36.6	0	.000445	.0535	.000285	4.05	.022	.06	.00032
Phthalic Anhydride (o-xylene)	106	.0630	6	.00351	1.24	.00074	.72	.00043	.07	.00004
Tricresyl Phosphate	54	1.513	10.5	.297	1.19	.0335	.327	.0914	.07	.00197
Supplementary Phase I RWL Data										
Acetone	3.60	.0083	2,370	5.47	.388	.00090				
Ethylene Dichloride	21.0	.0049	13	.0029	.048	.00001	.11	.00002	.85	.00020
Vinyl Chloride	4.0	.00057	19	.00264	1.36	.00019	.33	.00005	.70	.00010
Vinyl Chloride	145	.163	7	.00744	.059	.00055	2.0	.00226	.205	.00023
Styrene	< 4.29	.0265	< 29	.181	.027	.00016	.053	.00032	< .05	.00031
Styrene	1.0	.00208	18	.0013	.015	.00001	.135	.00019	.115	.00011

Table 6-4

Miscellaneous RWL for Subcategory C

Product	Flow	Phenol		NH_3-N		TKN		CN		Sulfate		Oil		T-P	
	gal/1000 lb	mg/l	kg/kkg	mg/l	kg/kkg	mg/l	kg/kkg	mg/l	kg/kkg	mg/l	kg/kkg	mg/l	kg/kkg	mg/l	kg/kkg
Hexamethylene Tetramine	557	.16	.00072	395	2.39	6,650	32.90			367	2.22	50	.19	1.07	.0044
Hexamethylene Tetramine	384	< .01	< .00002	7,040	22.5	8,260	26.50			< 9.3	< .0050	131	.419	.177	.00057
Synthetic Cresols	250	6,500	13.6	2.7	.0057	4.9	.0102	< .02	< .00004	< 6.5	< .0136	5,600	11.6	.169	.00035
Sec. Butyl Alcohol	7,780	.38	.025	0	0	3.1	.200			1,280	83.2	408	26.4	.079	.0051
Isobutylene	2,440	.01	.00012	9.4	.190	12.6	.256			1,210	24.50	1,030	20.9	1.07	.0217
Pentaerythritol	1,230	.17	.00178	< 1.1	< .012	2.3	.023			2,570	26.20	369	3.77	.081	.00082
Ethyl Acetate	155	0	0	.8	.00104	< 2.0	< .00259			1.0	.00129	203	.263	0	0
Propyl Acetate	142	0	0	.7	.00083	1.8	.00213			1.4	.00166	265	.314	.05	.00006
Calcium Stearate	6,460	.014	.00067	.8	.0568	6.0	.322	.0202	.00110	112	6.06	169.2	9.10	.0134	.00072
Hydrazine	3,630			1.0	.0297	11.3	.342			---	---	19	.569	.176	.00533
Isopropanol	304	.01	.00003	1.1	.00281	1.95	.00501			366	.931	15	.0380	.153	.00039
Acrylonitrile	338	2.28	.0064	13,600	38.3	22,000	62.1	270	.755	2,700	64.10	168	.475	.152	.00043
Acrylonitrile	570	.165	.000705	2,600	10.26	4,040	16.9	197	.970	5,300	74.3	135	.657	6.15	.0298
Propylene Glycol															
Propylene Oxide	6,580	1.15	.0381	1.5	.0875	3.8	.209			---	---	98.5	5.45	1.04	.061
Saccharin	32,200	.01	.0032	130.3	35.0	5,980	604			2,060	553			.07	.0189
Formic Acid	16,000	.0056	.00087	1.43	.193	5.07	.686	.02	.00267	4.67	.623	43.4	5.77	.042	.00561
Oxalic Acid	52,300	---	---	3.2	1.41	5.9	2.56	.02	.00873	5.6	2.44			.02	.00873

Table 6-4
(continued)

Miscellaneous RWL for Subcategory C

Product	Zn		Cu		Fe		Cr-Total		Cd		TSS		TDS		Cl^-	
	mg/l	kg/kkg	mg/l	kg/kkg	mg/l	kg/kkg	mg/l	kg/kkg	mg/l	kg/kkg	mg/l	kg/kkg	mg/l	kg/kkg	mg/l	kg/kkg
Hexamethylene Tetramine	1.4	.0085	.07	.00032	1.61	.0097	2.02	.012	<.05	<.00023	27	.106	2,320	10.1	40.5	.149
Hexamethylene Tetramine											6	.0192	971	3.11	234	.75
Synthetic Cresols	.19	.0004	<.05	<.0001	6.07	.013	<.05	<.0001	<.05	<.0001	9	.0188	33.5	.0699	1.5	.0034
Sec. Butyl Alcohol																
Isobutylene																
Pentaerythritol	.543	.0055	.20	.0020	8.65	.088	1.44	.0148	.093	.00095	129	1.31	289,000	2,960	868	8.86
Ethyl Acetate	.43	.00056	.77	.001	.55	.00071	<.05	<.00007	<.05	<.00007	1	.00129	66	.085	7	.00917
Propyl Acetate	.07	.00008	3.49	.00414	1.15	.00136	<.05	<.00006	<.05	<.00006	10	.0119	85	.101	3	.00335
Calcium Stearate	.049	.00262	.04	.00221	.108	.00590	.041	.00221	.041	.00221	26.7	1.43	6,020	324	3,870	208
Hydrazine	.13	.00394	.14	.00424	4.30	.130	.15	.00454	.23	.00697	1,180	35.8	118,000	3,590	98,700	991
Isopropanol	2.84	.00722	.17	.000435	2.88	.00731	.051	.00013	.051	.00013	4.5	.0121	2,550	6.46	214	.542
Acrylonitrile	.052	.00002	<.05	<.00014	3.13	.0088	<.05	<.00014	<.05	<.00014	630	1.78	57,200	161	858	2.42
Acrylonitrile	2.10	.00922	.05	.000235	4.24	.0182	.01	.00005	.052	.00024	184	.915	36,500	181	125	.616
Propylene Glycol																
Propylene Oxide	26.6	1.56	.25	.0138	23.9	1.39	.334	.0191	.111	.00614	4,520	263	44,700	2,460	24,800	351
Saccharin	.071	.0190	27.6	7.43	.25	.0665	.051	.0138	.062	.0166	33	8.83	14,500	3,900	5,050	356
Formic Acid	.107	.0142	.08	.0107	.05	.0104	.089	.0119	.05	.00668	6.8	.902	40.9	5.45	6	.792
Oxalic Acid	.01	.00436	.05	.0218	.01	.00436	.1	.0436	.05	.0218	10	4.36	36	15.7	6	2.58

Table 6-5

Miscellaneous RWL for Subcategory D

Product	Flow	Phenol		NH_3-N		TKN		CN		Sulfate		Oil		T-P	
	gal/1000 lb	mg/l	kg/kkg	mg/l	kg/kkg	mg/l	kg/kkg	mg/l	kg/kkg	mg/l	kg/kkg	mg/l	kg/kkg	mg/l	kg/kkg
Fatty Acids	7,900	.02	.00138	1.5	.096	4.6	.303			33.6	2.21	54	3.56	.39	.026
Fatty Acids	440	.55	.00202	121	.447	147	.540			1,400	152	1,190	4.36	129	.474
Fatty Acids & Derivat.	1,450	1.19	.0144	934	11.30	2,430	29.4			1,860	22.5	600	7.25	2.30	.0279
Fatty Acids & Derivat.	7,650	.06	.00383	86.1	5.50	87.6	5.59			280	17.9	68	4.34	.10	.00638
Fatty Acids	1,230	.45	.00461	3.75	.0364	21.2	.218			456	4.69	1,070	11.0	9.53	.0982
Pentachloro Phenol	354	37.6	.112	211.	.624	223	.661	.078	.00023	914	2.70	3	.00753	.038	.000115
Esters from Fatty Acids	1,070	.07	.00059	4.2	.0375	13.4	.119			192	1.71	4,000	35.7	3.3	.029
Methyl Esters	15,200	.33	.042	40	5.07	109	13.8			960	122	4,250	540	1.67	.212
Fatty Acid Derivatives	550	.20	.00088	.55	.0026	15.5	.071			640	2.94	701	3.22	2.01	.0092
Fatty Acid Derivatives	688	.54	.00312	620	3.56	640	3.67			1,640	9.42	470	2.70	18.7	.107
Naphthenic Acid	4,760	8.57	.341	3.7	.147	6.3	.252	.02	.00079	3,230	128	255	10.12	.194	.0077
Glycerine	5,450	10.6	.482	5.5	.248	980	44.5			4,200	191	8	.350	2.48	.113
Fatty Acid Amides	2,250	.04	.00068	7,730	145	7,890	148			2.4	.045	467	8.77	.02	.00038
Batch Chemicals	9,560	1.83	.19	36.7	2.87	53.7	4.16	.02	.00154	1,220	98.6	43.7	3.35	1.90	.156
Tannic Acid	1,200	2.37	.0238	1.8	.0180	350	3.50	.0237	.000303					595	5.96
Sodium Glutamate	8,030	.05	.0035	241	16.1	458	30.6			279	18.7	85	5.69	15.2	1.02
Plasticizers (Diethyl Phthalate)	78.3	.01	.00001	1.1	.00073	3.9	.00258	.04	.00003	2,030	1.33	12,500	8,170	3.29	.00215
Dyes	3,930	.63	.0205	82.1	2.69	126	4.14	.041	.0014	548	18.0	334	10.9	.142	.0047
para-Nitro-Aniline	4,680	7.15	.279	1,590	62.1	1,830	71.5			92.5	3.61	332	12.9	.493	.0193
Miscellaneous Dyes	221,000	16.9	31.2	17.2	31.7	27.9	51.6	.432	.756	1,020	578	74	136	10.5	19.4
Azo Dye	26,200	7.49	1.57	15.0	3.08	32.3	6.63	.085	.018	442	90.7	106	24.8	.53	0.113
ortho-Nitro-Aniline	32,200	7.97	2.14	1,150	310	7,340	976			103	27,700	10	2,600	.531	.143
Vanillin	15,900	147	19.5	4.05	.536	181	24.0			5,330	33.5	72	9.56	.087	.0115
Citric Acid	57,100	.07	.0309	51.8	24.7	91.2	43.5	.026	.0123	2,070	986	19	8.85	.101	.0484
Ionone & Methyl Ionone	1,370	1.04	.0119	44.5	.508	53.2	.608	.023	.00026	3,980	45.3	383	4.37	.293	.00335
Citronellol Geraniol	1,220	0.00	0.00	9.3	.0943	11.8	.120	.020	.00020	40.8	0.414	2,630	26.6	.797	.00808
Pigments	37,500	1.81	.565	2.1	.66	13.9	4.33	.026	.00814	564	176	67	20.9	.309	.0967

Table 6-5
(continued)

Miscellaneous RWL for Subcategory

Product	Zn		Cu		Fe		Cr-Total		Cd		TSS		TDS		Cl^-	
	mg/l	kg/kkg	mg/l	kg/kkg	mg/l	kg/kkg	mg/l	kg/kkg	mg/l	kg/kkg	mg/l	kg/kkg	mg/l	kg/kkg	mg/l	kg/kkg
Fatty Acids	.104	.0069	.05	.0033	3.06	.202	.05	.0033	.05	.0033	128	8.44	370	24.4	67	4.40
Fatty Acids											780	2.86	61,900	227	84	.308
Fatty Acids & Derivat.	.755	.00913	.075	.00091	3.67	.0445	.65	.0079	.05	.00061	669	8.10	2,630	31.8	61.5	.074
Fatty Acids & Derivat.	.17	.011	.05	.0032	.01	.00064	.05	.0032	.05	.0032	57	3.64	1,150	73.4	4,320	275
Fatty Acids	.31	.0032	1.73	.0178	2.85	.0294	2.32	.0240	.05	.00052	1,560	16.0	1,378	14.2	70	.721
Pentachloro Phenol	.272	.00081	.185	.00054	2.69	.00796	.107	.000315	.15	.00044	155	.46	8,950	26.4	291,000	860
Esters from Fatty Acids	.66	.0059	.05	.00045	21.4	.191	.35	.0031	.05	.00045	3,840	34.2	770	6.88	119	1.06
Methyl Esters											551	69.8	5,720	726	27	3.41
Fatty Acid Derivatives	.79	.00365	.22	.00101	2.71	.0125	3.25	.0149	.05	.00023	211	.970	3,490	16.0	100	.651
Fatty Acid Derivatives	1.60	.0092	.10	.00057	2.13	.012	.05	.0029	.05	.00029	748	4.29	2,400	13.9	71	.408
Naphthenic Acid	.302	.0139	.05	.002	9.23	.366	.05	.002	.05	.002	68.5	2.72	7,690	305	69	2.75
Glycerine	.450	.021	.40	.0182	11.2	.509	.05	.0022	.05	.0022	928	42.2	10,800	490	17	.791
Fatty Acid Amides											494	9.27			326	6.12
Batch Chemicals	1.312	.110	.587	.0442	9.05	.744	1.15	.0988	.05	.00383	42.6	3.28	3,250	261	776	61.4
Tannic Acid	3.52	.0347	.807	.008	28.6	.287	.518	.00519	.035	.00035			108,000	1,080		
Sodium Glutamate											2,260	151,000	1,650	110	85	5.68
Plasticizers (Diethyl Phthalate)	3.95	.00258	97.9	.0640	4.49	.00293	.076	.00005	.151	.0001	101	.0661	94,800	61.9	160	.104
Dyes	.413	.0135	61.6	2.02	5.62	.184	.56	.0184	.06	.00197	121	3.97	42,400	1,390	12,100	398
para-Nitro-Analine	.229	.00892	.11	.00417	5.48	.214	.147	.00574	.073	.00287	1,430	56.1	13,300	520	5,780	226
Miscellaneous Dyes	.580	1.07	.775	1.43	7.62	14.1	12.6	3.28	.050	.0924						
Azo Dye	.287	.0614	.941	.192	4.58	.940	.572	.136	.049	.0100	99.3	20.4	3,150	646	1,130	215
ortho-Nitro-Analine	.068	.0184	.05	.0142	2.79	.751	.05	.0135	.05	.0135	270	72.5	2,020	543	306	82.3
Vanillin	.517	.0686	7.59	1.00	17.2	2.28	.458	.0607	.186	.0247	24.5	3.26	348,000	46,300	---	---
Citric Acid	3.30	1.57	.25	.120	2.09	.996	.055	.0264	.05	.0238	78	36.9	41,300	19,700	15,500	423
Ionone & Methyl Ionone	1.47	.0168	9.31	.106	25.0	.286	.112	.00128	.090	.00102	124	1.42	85,400	976	191	2.18
Citronellol Geraniol	.317	.00322	.08	.00081	.98	.00996	.062	.00063	.061	.00062	21	.211	32,600	330	282	2.86
Pigments	.135	.0423	.26	.207	.85	.266	.05	.0157	.05	.0157	59	18.4	1,940	606	621	194

Oil, also called oil and grease, or hexane solubles, is a pollutant parameter that can be in the wastes from the organic chemicals industry. Oil can form unsightly films on the water, interfere with aquatic life, disturb biological processes in sewage treatment plants, and become a fire hazard. It also can be a food source for microorganisms and exhibit an oxygen demand. Oil emulsions may adhere to the gills of fish or coat and destroy algae or other plankton. Deposition of oil in the bottom sediments can serve to prohibit normal benthic growths, thus interrupting the aquatic food chain. Soluble and emulsified material ingested by fish may taint the flavor of the fish flesh. Water soluble components may exert toxic action on fish. Floating oil may reduce the re-aeration of the water surface and in conjunction with emulsified oil may interfere with photosynthesis. Water insoluble components damage the plumage and coats of fowls and water animals. Oil and grease in a water can result in the formation of objectionable surface slicks preventing the full aesthetic enjoyment of the water. Oil spills can damage the surface of boats and can destroy the aesthetic characteristics of beaches and shorelines.

Oil RWL's for the major Subcategories A, B, C, and D are presented in Tables 6-2 through 6-5. Although some of the raw waste loads show high concentrations of oil, effluent limitations were not considered to be warranted. The explanation for not limiting oil discharges is that this pollutant parameter is of secondary importance whenever other primary pollutant parameters are controlled such as for BOD_5 and TSS.

Nitrogen

Ammonia nitrogen in the raw waste is one of the many forms of nitrogen in a waste stream. Anaerobic decomposition of protein, which contains organic nitrogen, leads to the formation of ammonia. Thus, anaerobic lagoons or digesters can produce increased levels of ammonia. Also, septic (anaerobic) conditions within the plant in traps, basins, etc., may lead to increased ammonia in the waste water.

Ammonia is a common product of the decomposition of organic matter. Dead and decaying animals and plants along with human and animal body wastes account for much of the ammonia entering the aquatic ecosystem. Ammonia exists in its non-ionized form only at higher pH levels and is the most toxic* in this state. The lower the pH, the more ionized ammonia is formed and its toxicity decreases. Ammonia, in the presence of dissolved oxygen, is converted to nitrate (NO_3^-)

*The term toxic or toxicity is used herein in the normal scientific sense of the word and not as a specialized term referring to Section 307(a) of the Act.

by nitrifying bacteria. Nitrite (NO_2), which is an intermediate product between ammonia and nitrate, sometimes occurs in quantity when nitrification is not complete. Nitrification may occur in an aerobic treatment process and in streams. Ammonia will deplete the oxygen supply in a stream and its oxidation products are nutrients for aquatic growth.

Nitrates are considered to be among the poisonous ingredients of mineralized waters, with potassium nitrate being more poisonous than sodium nitrate. Excess nitrates cause irritation of the mucous linings of the gastrointestinal tract and the bladder. The symptoms are diarrhea and diuresis. Drinking one liter of water containing 500 mg/l of nitrate can cause such symptoms.

Infant methemoglobinemia, a disease characterized by certain specific blood changes and cyanosis, may be caused by high nitrate concentrations in the water used for preparing feeding formulae. While it is impossible to state precise concentration limits, water containing more than 10 mg/l of nitrate nitrogen (NO_3-N) is not recommended for infants. Nitrates are also harmful in fermentation processes and can cause disagreeable tastes in beer.

In streams polluted with municipal sewage, up to one half of the nitrogen in the sewage may be in the form of unionized ammonia, and municipal sewage may carry up to 35 mg/l of total nitrogen. It has been shown that at a level of 1.0 mg/l unionized ammonia, the ability of hemoglobin to combine with oxygen is impaired and fish may suffocate. Evidence indicates that ammonia exerts a considerable toxic effect on all aquatic life within a range of less than 1.0 mg/l to 25 mg/l, depending on the pH and dissolved oxygen level present.

Ammonia can add to the problem of eutrophication by supplying nitrogen through its breakdown products. Some lakes in warmer climates, and others that are aging quickly are sometimes limited by the nitrogen available. Any increase will speed up the plant growth and decay process.

Kjeldahl Nitrogen (TKN)

Kjeldahl Nitrogen (TKN) measures the amount of ammonia and organic nitrogen. When used in conjunction with the ammonia nitrogen, the organic nitrogen can be determined by the difference. Under septic conditions, organic nitrogen decomposes to form ammonia. Kjeldahl nitrogen is a good indicator of the crude protein in the waste water. Kjeldahl

nitrogen has not been a common parameter for regulation and is a much more useful parameter for raw waste than for final effluent.

Ammonia and TKN RWL data of major significance for Tables 6-2 thru 6-5 are summarized below:

Subcategory	Product	RWL Concentration NH3 mg/l	RWL Concentration TKN-N mg/l
B	Acrylonitrile	13,600	22,000
	Diphenylamine	15,500	16,700
	Hexamethylenediamine	7,630	9,170
C	Hexamethylenetetramine	7,040	8,260
D	Fatty Acids and Derivatives	1-7,730	5-7,890

Effluent limitations were not established for TKN since as a rule those product processes with high TKN values also have high BOD values. The oxidation of the TKN would be at least partially measured by the BOD analysis. Thus limitations based upon BOD would in effect control the TKN in the effluent. Ammonia limitations were not established for these product processes. It was determined that need for such limitation should be established on a plant by plant basis after consideration of the individual plants' total waste load and/or water quality considerations in effect at the particular plant location.

Phenol

Phenols and phenolic wastes are derived from petroleum, coke, and chemical industries; wood distillation; and domestic and animal wastes. Many phenolic compounds are more toxic than pure phenol. Their toxicity varies with the combination and general nature of total wastes. The effect of combinations of different phenolic compounds is cumulative.

Phenols and phenolic compounds are both acutely and chronically toxic to fish and other aquatic animals. Also, chlorophenols produce an unpleasant taste in fish flesh that destroys their recreational and commercial value.

It is necessary to limit phenolic compounds in raw water used for drinking water supplies, as conventional treatment methods used by water supply facilities do not normally remove phenols. The ingestion of concentrated solutions of

phenols will result in severe pain, renal irritation, shock and possibly death.

Phenols also reduce the utility of water for certain industrial uses, notably food and beverage processing, where it creates unpleasant tastes and odors in the product.

Phenols can be removed in biological treatment systems and reduce the problems described above.

Phosphorus

Phosphorus, commonly reported as P, is a nutrient for aquatic plant life and can therefore cause an increased eutrophication rate in water courses. The threshold concentration of phosphorus in receiving bodies that can lead to eutrophication is about 0.01 mg/l. Phosphorus in raw waste from the organic chemical industry is a result of cleaning operation. In some cases phosphorus is part of the product processes formulation and would enter the waste water from spills and equipment wash down.

During the past 30 years, a formidable case has developed for the belief that increasing standing crops of aquatic plant growths, which often interfere with water uses and are nuisances to man, frequently are caused by increasing supplies of phosphorus. Such phenomena are associated with a condition of accelerated eutrophication or aging of waters. Phosphorus is not the sole cause of eutrophication, but there is evidence to substantiate that it is frequently the key element required by fresh water plants and is generally present in the least amount relative to need. Therefore, an increase in phosphorus allows use of other, already present, nutrients for plant growths. Phosphorus is usually described, for this reasons, as a "limiting factor."

When a plant population is stimulated in production and attains a nuisance status, a large number of liabilities are immediately apparent. Dense populations of pond weeds make swimming dangerous. Boating and water skiing and sometimes fishing may be eliminated because of the mass of vegetation that serves as an physical impediment to such activities. Plant populations have been associated with stunted fish populations and with poor fishing. Plant nuisances may emit vile stenches, impart tastes and odors to water supplies, reduce the efficiency of industrial and municipal water treatment, impair aesthetic beauty, reduce or restrict resort trade, lower waterfront property values, cause skin rashes to man during water contact, and serve as a desired substrate and breeding ground for flies.

Phosphorus in the elemental form is particularly toxic, and subject to bioaccumulation in much the same way as mercury. Colloidal elemental phosphorus will poison marine fish (causing skin tissue breakdown and discoloration). Also, phosphorus is capable of being concentrated and will accumulate in organs and soft tissues. Experiments have shown that marine fish will concentrate phosphorus from water containing as little as 1 ug/l.

Adequate amounts of phosphorus must be in a waste water to permit adequate microbial growth in a biological treatment system and hence obtain satisfactory treatment plant performance. If inadequate amounts of phosphorus are not in a waste water to achieve adequate biological treatment plant performance, supplemental phosphorus will have to be added to the waste water of the biological treatment system.

Effluent limitation for phosphorus were not established because in general the concentrations in the waste water were too low to warrant specific controls.. With specific product/processes phosphorus may have to be added, rather than removed, to assure adequate phosphorus for the biological treatment systems.

Total Dissolved Solids, Chlorides, Sulfides

In natural waters the dissolved solids consist mainly of carbonates, chlorides, sulfates, phosphates, and possibly nitrates of calcium, magnesium, sodium, and potassium, with traces of iron, manganese and other substances.

Many communities in the United States and in other countries use water supplies containing 2000 to 4000 mg/l of dissolved salts, when no better water is available. Such waters are not palatable, may not quench thirst, and may have a laxative action on new users. Waters containing more than 4000 mg/l of total salts are generally considered unfit for human use, although in hot climates such higher salt concentrations can be tolerated whereas they could not be in temperate climates. Waters containing 5000 mg/l or more are reported to be bitter and act as bladder and intestinal irritants. It is generally agreed that the salt concentration of good, palatable water should not exceed 500 mg/l.

Limiting concentrations of dissolved solids for fresh-water fish may range from 5,000 to 10,000 mg/l, according to species and prior acclimatization. Some fish are adapted to living in more saline waters, and a few species of fresh-water forms have been found in natural waters with a salt

concentration of 15,000 to 20,000 mg/l. Fish can slowly become acclimatized to higher salinities, but fish in waters of low salinity cannot survive sudden exposure to high salinities, such as those resulting from discharges of oil-well brines. Dissolved solids may influence the toxicity of heavy metals and organic compounds to fish and other aquatic life, primarily because of the antagonistic effect of hardness on metals.

Waters with total dissolved solids over 500 mg/l have decreasing utility as irrigation water. At 5,000 mg/l water has little or no value for irrigation.

Dissolved solids in industrial waters can cause foaming in boilers and cause interference with cleanness, color, or taste of many finished products. High contents of dissolved solids also tend to accelerate corrosion.

Specific conductance is a measure of the capacity of water to convey an electric current. This property is related to the total concentration of ionized substances in water and water temperature. This property is frequently used as a substitute method of quickly estimating the dissolved solids concentration.

Cyanide

Cyanides in water derive their toxicity primarily from undissolved hydrogen cyanide (HCN) rather than from the cyanide ion (CN^-). HCN dissociates in water into H^+ and CN^- in a pH dependent reaction. At a pH of 7 or below, less than 1 percent of the cyanide is present as CN^-; at a pH of 8, 6.7 percent; at a pH of 9, 42 percent; and at a pH of 10, 87 percent of the cyanide is dissociated. The toxicity of cyanides is also increased by increases in temperature and reductions in oxygen tensions. A temperature rise of 10°C produced a two- to threefold increase in the rate of the lethal action of cyanide.

Cyanide has been shown to be poisonous to humans, and amounts over 18 ppm can have adverse effects.

Trout and other aquatic organisms are extremely sensitive to cyanide. Amounts as small as 0.1 part per million can kill them. Certain metals, such as nickel, may complex with cyanide to reduce lethality especially at higher pH values, but zinc and cadmium cyanide complexes are exceedingly toxic.

When fish are poisoned by cyanide, the gills become considerably brighter in color than those of normal fish, owing to the inhibition by cyanide of the oxidase responsible for oxygen transfer from the blood to the tissues.

The following is a summary of cyanide data which is significant:

Subcategory	Product	RWL Concentration mg/l
B	Adiponitrile	187
	Hexamethylene Diamine	20
C	Acrylonitrile	270

The cyanide results from the previous processes were determined using Standard Method's Cyanide Titration Procedure with and without preliminary distillation. The following is a comparison of results from one plant:

	CN mg/l
Standard Method Titration Procedure	4,870
Standard Method Distillation - Titration Procedure	940

It has been reported that aldehydes combine with HCN to form cyanohydes during distillation and that this complex interferes with the titration procedure. Based on this analytical experience, it is recommended that only the titration procedure be used with these waste waters.

Heavy Metals

Heavy metals (such as zinc, copper and cadmium) are inhibitory to microorganisms because of their ability to tie up proteins in their key enzyme systems.

Cadmium

Cadmium in drinking water supplies is extremely hazardous to humans, and conventional treatment, as practiced in the United States, does not remove it. Cadmium is cumulative in the liver, kidney, pancreas, and thyroid of humans and other animals. A severe bone and kidney syndrome in Japan has been associated with the ingestion of as little as 600 ug/day of cadmium.

Cadmium is an extremely dangerous cumulative toxicant, causing insidious progressive chronic poisoning in mammals, fish, and probably other animals because the metal is not excreted. Cadmium could form organic compounds which might lead to mutagenic or tetratogenic effects. Cadmium is known to have marked acute and chronic effects on aquatic organisms.

Cadmium acts synergistically with other metals. Copper and zinc substantially increase its toxicity. Cadmium is concentrated by marine organisms, particularly molluscs, which accumulate cadmium in calcareous tissues and in the viscera. A concentration factor of 1000 for cadmium in fish muscle has been reported, as have concentration factors of 3000 in marine plants, and up to 29,600 in certain marine animals. The eggs and larvae of fish are apparently more sensitive than adult fish to poisoning by cadmium, and crustaceans appear to be more sensitive than fish eggs and larvae.

Chromium

Chromium, in its various valence states, is hazardous to man. It can produce lung tumors when inhaled and induces skin sensitizations. Large doses of chromates have corrosive effects on the intestinal tract and can cause inflammation of the kidneys. Levels of chromate ions that have no effect on man appear to be so low as to prohibit determination to date.

The toxicity of chromium salts toward aquatic life varies widely with the species, temperature, pH, valence of the chromium, and synergistic or antagonistic effects, especially that of hardness. Fish are relatively tolerant of chromium salts, but fish food organisms and other lower forms of aquatic life are extremely sensitive. Chromium also inhibits the growth of algae.

In some agricultural crops, chromium can cause reduced growth or death of the crop. Adverse effects of low concentrations of chromium on corn, tobacco and sugar beets have been documented.

Copper

Copper salts occur in natural surface waters only in trace amounts, up to about 0.05 mg/l, so that their presence generally is the result of pollution. This is attributable to the corrosive action of the water on copper and brass tubing, to industrial effluents, and frequently to the use

of copper compounds for the control of undesirable plankton organisms.

Copper is not considered to be a cumulative systemic poison for humans, but it can cause symptoms of gastroenteritis, with nausea and intestinal irritations, at relatively low dosages. The limiting factor in domestic water supplies is taste. Threshold concentrations for taste have been generally reported in the range of 1.0-2.0 mg/l of copper, while as much as 5-7.5 mg/l makes the water completely unpalatable.

The toxicity of copper to aquatic organisms varies significantly, not only with the species, but also with the physical and chemical characteristics of the water, including temperature, hardness, turbidity, and carbon dioxide content. In hard water, the toxicity of copper salts is reduced by the precipitation of copper carbonate or other insoluble compounds. The sulfates of copper and zinc, and of copper and cadmium are synergistic in their toxic effect on fish.

Copper concentrations less than 1 mg/l have been reported to be toxic, particularly in soft water, to many kinds of fish, crustaceans, mollusks, insects, phytoplankton and zooplankton. Concentrations of copper, for example, are detrimental to some oysters above .1 ppm. Oysters cultured in sea water containing 0.13-0.5 ppm of copper deposited the metal in their bodies and became unfit as a food substance.

Zinc

Occurring abundantly in rocks and ores, zinc is readily refined into a stable pure metal and is used extensively for galvanizing, in alloys, for electrical purposes, in printing plates, for dye-manufacture and for dyeing processes, and for many other industrial purposes. Zinc salts are used in paint pigments, cosmetics, pharmaceuticals, dyes, insecticides, and other products too numerous to list herein. Many of these salts (e.g., zinc chloride and zinc sulfate) are highly soluble in water; hence it is to be expected that zinc might occur in many industrial wastes. On the other hand, some zinc salts (zinc carbonate, zinc* oxide, zinc sulfide) are insoluble in water and consequently it is to be expected that some zinc will precipitate and be removed readily in most natural waters.

In zinc-mining areas, zinc has been found in waters in concentrations as high as 50 mg/1 and in effluents from metal-plating works and small-arms ammunition plants it may

*The term toxic or toxicity is used herein in the normal scientific sense of the word and not as a specialized term referring to Section 307(a) of the Act.

occur in significant concentrations. In most surface and ground waters, it is present only in trace amounts.

Concentrations of zinc in excess of 5 mg/l in raw water used for drinking water supplies cause an undesirable taste which persists through conventional treatment. Zinc can have an adverse effect on man and animals at high concentrations.

In soft water, concentrations of zinc ranging from 0.1 to 1.0 mg/l have been reported to be lethal to fish. Zinc is thought to exert its toxic action by forming insoluble compounds with the mucous that covers the gills, by damage to the gill epithelium, or possibly by acting as an internal poison. The sensitivity of fish to zinc varies with species, age and condition, as well as with the physical and chemical characteristics of the water. Some acclimatization to the presence of zinc is possible. It has also been observed that the effects of zinc poisoning may not become apparent immediately, so that fish removed from zinc-contaminated water to zinc-free water (after 4-6 hours of exposure to zinc) may die 48 hours later. The presence of copper in water may increase the toxicity of zinc to aquatic organisms, but the presence of calcium or hardness may decrease the relative toxicity.

Observed values for the distribution of zinc in ocean waters vary widely. The major concern with zinc compounds in marine waters is not one of acute toxicity, but rather of the long-term sub-lethal effects of the metallic compounds and complexes. From an acute toxicity point of view, invertebrate marine animals seem to be the most sensitive organisms tested. The growth of the sea urchin, for example, has been retarded by as little as 30 ug/l of zinc.

Zinc sulfate has also been found to be lethal to many plants, and it could impair agricultural uses. Due to its potential toxicity, zinc can be a pollutant parameter requiring the establishment of an effluent limitation.

The following concentrations of heavy metals have been reported as being inhibitory to biological treatment:

Pollutant	Inhibitory Concentration mg/L
Copper	1.0
Zinc	5.0 - 10.0
Cadmium	0.02*
Total Chromium	3.0
Iron	5.0*

*Inhibitory to anaerobic sludge digestion.

The following is a summary of the metals data from Tables 6-2 through Tables 6-5 which is considered significant in regard to inhibition of biological treatment:

Subcategory	Product	Metal RWL Concentration mg/L	
B	Adiponitrile	48	- Copper
	Chloromethanes	14.3	- Iron
		7.7	- Total Chromium
	Methyl Chloride	26.3	- Copper
		0.21	- Cadmium
		18.8	- Iron
		33.8	- Zinc
	HMDA	74.5	- Zinc
	Maleic Anhydride	0.4	- Cadmium
	Perchloroethylene	9.45	- Total Chromium
C	Propylene Oxide	0.1	- Cadmium
		23.9	- Iron
		26.9	- Zinc
	Saccharin	27.6	- Copper
	Hydrazine	0.23	- Cadmium
D	Plasticizers	97.9	- Copper
	Dyes	61.6	- Copper
	Vanillin	17.2	- Iron
	Miscellaneous	12.6	- Total Chromium

Effluent limits are established for copper for the manufacture of plasticizers, dyes, pigments and toners. Chromium is limited for the manufacture of dyes, pigments and toners. These metals were considerably higher in load based on lbs per 1000 lbs product for these product segments. Therefore effluent limits were established for copper and chromium for these segments.

pH, Acidity and Alkalinity

Waters with pH outside the 6.0 to 9.0 range can affect the survival of most organisms, particularly invertebrates. The usual pH for raw waste falls between 6.0 and 9.0. This pH range is close enough to neutrality that it does not significantly affect treatment effectiveness or effluent quality. However, some control may be required particularly if pH adjustment has been used in the production processes. The pH of the waste water then should be returned to its normal range before discharge. The effect of chemical additions for pH adjustment should be taken into consideration, as new pollutants could result.

Acidity and alkalinity are reciprocal terms. Acidity is produced by substances that yield hydrogen ions upon hydrolysis and alkalinity is produced by substances that yield hydroxyl ions. The terms "total acidity" and "total alkalinity" are often used to express the buffering capacity of a solution. Acidity in natural waters is caused by carbon dioxide, mineral acids, weakly dissociated acids, and the salts of strong acids and weak bases. Alkalinity is caused by strong bases and the salts of strong alkalies and weak acids.

The term pH is a logarithmic expression of the concentration of hydrogen ions. At a pH of 7, the hydrogen and hydroxyl ion concentrations are essentially equal and the water is neutral. Lower pH values indicate acidity while higher values indicate alkalinity. The relationship between pH and acidity or alkalinity is not linear or direct.

Waters with a pH below 6.0 are corrosive to water works structures, distribution lines, and household plumbing fixtures and can thus add such constituents to drinking water as iron, copper, zinc, cadmium and lead. The hydrogen ion concentration can affect the "taste" of the water. At a low pH, water tastes "sour". The bactericidal effect of chlorine is weakened as the pH increases, and it is advantageous to keep the pH close to 7. This is very significant for providing safe drinking water.

Extremes of pH or rapid pH changes can exert stress conditions or kill aquatic life outright. Dead fish, associated algal blooms, and foul stenches are aesthetic liabilities of any waterway. Even moderate changes from "acceptable" criteria limits of pH are deleterious to some species. The relative toxicity to aquatic life of many materials is increased by changes in the water pH. Metalocyanide complexes can increase a thousand-fold in toxicity with a drop of 1.5 pH units. The availability of

many nutrient substances varies with the alkalinity and acidity. Ammonia is more lethal with a higher pH.

The lacrimal fluid of the human eye has a pH of approximately 7.0 and a deviation of 0.1 pH unit from the norm may result in eye irritation for the swimmer. Appreciable irritation will cause severe pain.

Effluent limits for pH have been established for all subcategories to decrease the difficulties noted above.

SECTION VII

CONTROL AND TREATMENT TECHNOLOGIES

The waste loads discharged from the organic chemicals industry to receiving streams can be reduced to desired levels, including no discharge of pollutants, by conscientious water management including recycle, in-plant waste controls, process revisions, and by the use of waste treatment systems.

Control and treatment technologies which are available for waste waters in the organic chemicals industry can encompass the entire spectrum of waste water treatment technology. The selection of a particular technology is dependent on the technology economics and the desired magnitude of the final effluent concentration. Control and treatment technology may be divided into two major groupings:

1. In-plant pollution abatement.
2. End-of-pipe treatment.

After discussing the available performance data, conclusions will be made relative to the reduction of various pollutants commensurate with the following distinct technology levels.

1. Best Practicable Control Technology Currently Available (BPCTCA).
2. Best Available Technology Economically Achievable (BATEA).
3. Best Available Demonstrated Control Technology (BADCT) for New Source Performance Standards.

To assess the economic impact of these proposed effluent limitations on the industry, model treatment systems have been proposed which are considered capable of attaining the recommended RWL reduction. It should be noted that the particular systems chosen for use in the economic analysis are not the only systems which are capable of attaining the specified pollutant reductions.

There exist many alternate systems which, either taken singly or in combination, are capable of attaining the effluent limitations and standards recommended in this report. These alternate choices include:

1. Various types of end-of-pipe waste water treatment.
2. Various in-plant modifications and installation of pollution control equipment.

3. Various combinations of end-of-pipe and in-plant technologies.

The complexity of the Organic Chemicals Industry dictated the use of only one treatment model for each effluent level. The use of a single treatment model for these waste waters is done only to facilitate the economic analysis and should not be inferred as the only feasible technology to meet the limitations.

The individual manufacturer within the Organic Chemicals Industry must make the ultimate choice of what specific combination of pollution control measures is best-suited to his situation in complying with the limitations and standards presented in this report.

In-Plant Pollution Abatement

The complexity of the organic chemicals industry precludes the possibility of providing a specific list of process modifications or control measures which are applicable to all of the Industry's processes.

The elimination or reduction of in-plant pollution depends upon any one of the following factors:

1. Plant process selection to minimize pollution.

Present corporate environmental awareness requires that new products and processes be evaluated with regard to their environmental aspects.

2. The modification of process equipment to improve product recovery or to minimize pollution.

These areas have been discussed thoroughly in the Phase I Development Document.

3. Maintenance and good housekeeping practices minimize pollution.

The competitive nature of the industry in conjunction with the flammable nature of many of its products requires most producers to operate their plants in the most efficient manner possible. This necessitates good maintenance and housekeeping practices. However, there are other segments of the industry that have minimized maintenance expenditures and whose management does not adequately fund their environmental control staff nor

support them in their quest to enforce rigid housekeeping regulations.

4. The age of the plant and process equipment as it impacts on pollution.

Poorly maintained process equipment does not warrant consideration under this age consideration. The real problem is that older plants generally have larger waste water loads than newer plants. In addition, older plant layouts often do not allow for economic modifications to the process equipment to minimize pollution and, in many cases, make segregation of storm and process waters difficult but not impossible.

The following in-process controls will lessen the raw waste load to the treatment facility:

1. the substitution of noncontact heat exchangers for direct contact water cooling;
2. the use of nonaqueous quench media as a substitute for water where direct contact quench is required;
3. the recycle of process water, such as between absorber and stripper;
4. the reuse of process water (after treatment) as a make-up to evaporative cooling towers through which noncontact cooling water is circulated;
5. the use of process water to produce low pressure steam by noncontact heat exchangers in reflux condensers of distillation columns;
6. recycle cooling for contact water systems (barometric condensers);
7. the recovery of spent acids or caustic solutions for reuse;
8. the recovery and reuse of spent catalyst solutions;
9. the use of nonaqueous solvents for extraction of products with subsequent recovery of solvents; and
10. addition of demisters.

Guidelines for Prevention, Control and Reporting of Spills have been developed by the Manufacturing Chemists Association (MCA) for use in the organic chemicals industry and other industries. This 22 page document notes how to assess the potential of spills and how to prevent spills. Plants in the organic chemical industry should use such guidelines as part of good practice in-plant waste control. Numerous articles are available that indicate that significant in-plant controls can be instituted in organic chemical plants to decrease the waste output.

The production of organic chemicals results in many types of contaminated waste waters, and the treatment methods employed cover the range of known practical techniques. In-plant control is the first step in instituting treatment practices. Such controls include the salvage of unreacted chemicals, recovery of by-products, multiple reuse of water, good housekeeping techniques to reduce leaks and spills, and changes in processing methods. These controls can result in reducing the concentrations of almost all potential pollutants and can, most importantly, reduce the volumes of waste waters requiring treatment.

Flow equalization equipment can be an important part of in-plant waste water control. Equalization facilities consist of a holding tank and pumping equipment designed to reduce the fluctuations of waste water flow through materials recovery and waste treatment systems. They can be economically advantageous, whether the industry is treating its own wastes or discharging into a city sewer after some pretreatment. The equalizing tank should have sufficient capacity to provide for uniform flow to treatment facilities throughout a 24-hour day. The tank is characterized by a varying flow input and a constant flow output.

The major advantages of equalization are that treatment systems can be smaller since they can be designed for the 24-hour average rather then the peak flows, and many secondary waste treatment systems operate much better when not subjected to shock loads or variations in feed rate.

Many plants do not require any special tanks to achieve flow equalization because of the manner in which they are operated. For example, plants with large continuous systems or a number of batch systems (10 to 20) with staggered cooling cycles that operate most of the day are inherently achieving a near-constant flow of waste water. Other plants need to institute procedures or equipment to achieve flow and waste load equalization.

Drainage or spills from raw materials may contribute significantly to the total raw waste load. These sources can be controlled or eliminated by containing them and attempting recovery and reuse or disposal in a non liquid manner.

The following list of spill prevention and control techniques that are commonly found throughout the liquid handling industries and apply equally well to the organic chemicals industry:

1. Diked areas around storage tanks.

For flammable substances these are required; however, as a passive barrier to tank rupture, and tank and pipe connection leaks, a diked tank storage area is considered the first-line barrier to containing and reducing the spread of large-volume spills.

2. Tank level indicators and alarms.

The sounding of alarms at prescribed levels during tank filling could be expected to minimize the common occurrence of overflow when reliance is on manual gauging for control.

3. Above-ground transfer lines.

Above-ground installation permits rapid detection of pipeline failures and minimizes hazardous polluting substances from polluting ground waters. Although increasing the possible mobility into surface waters, long-term considerations are believed to favor above-ground transfer lines.

4. Curbed process areas.

Spills from processing equipment must often be removed rapidly from the area but prevented from spreading widely in the immediate area; consequently, curbed areas connected to collecting sewers are indicated.

5. Area catchment basins or slop tanks.

For containment of small spills and leaks in the immediate area thereby effecting removal at the highest concentrations, local catchment basins can provide significant flexibility in preventing spills from entering water courses.

6. Holding lagoons for general plant area.

Lagoons which can be used to segregate spills and prevent them from passing as slugs into waste water treatment plant or water courses, give the surge capabilities necessary for handling large volume or highly toxic spills.

7. Initial waste water treatment.

For treatment of floating substances or for the chemical neutralization or destruction of spilled materials, the initial waste water treatment plants serve to ameliorate the more drastic effects of spills in receiving waters.

8. Availability of spill cleanup equipment.

Vacuum trucks, booms, neutralizing chemicals and other similar equipment represent obvious contingency planning to cope with spills.

9. Routine preventative maintenance schedule.

10. Spill control plan.

The formalization of a plan for coping with spills and the training of personnel in courses of action similar to plant safety programs is a highly desirable approach of coping with spills in a manner which would avoid entry into water courses and sewers thereby avoiding the disruption of waste water treatment facilities.

The application of ancillary control techniques requires judicious planning of operational philosophy, organization, and specific management and control measures.

Operational Philosophy

Each plant management needs to formulate a "Spill Exposure Index" which will reveal potentially-serious problems in connection with its operation. Once the problems are defined, remedies and the costs of implementing them are not difficult to determine. The next step is establishing priorities, a budget, and a commitment to capital and operating expenditures. As new production projects are proposed for a plant site, each should incorporate adequate measures for spill prevention as an integral part of its design. Capital investment in this category should be considered to be important as an investment in process equipment or, alternatively, in more elaborate waste water handling procedures.

One approach is the development of a classification index (taking into consideration the minimum aquatic biological toxicity, and effect on waste treatment plant performance) which establishes ratings of hazardous polluting substances and recommends the minimum acceptable containment measures.

Organization

Since most of the prevention and control measures represent added inconvenience and costs in the eyes of the plant operating staff, even when wholeheartedly accepted, establishment of an independent group, with a direct assignment to minimize spills and authorized to take action, is especially desirable.

Specific Measures

In a facility with a "high spill exposure index" there should be a review of the designs and conditions to determine the potential consequences of spills and leaks in an objective manner. The review should consider the design of the process and equipment and should involve a piece-by-piece physical inspection. In common with most successful projects, there is no substitute for careful attention to details. All possible accidents and departures from routine should be considered and then analyzed in terms of the hazard and the corrective action or control measures which could be applied.

All plant facilities need to be included, both process and service units. A number of potential sources of leaks and spills can frequently be eliminated without real inconvenience to the process.

In the process area, a number of spill exposure conditions are often found. One of the most serious is limited storage between coupled process units which may not be in balanced operation. Intermediate storage of this type is most often designed on the basis of surge volume provided. But often operating rates are difficult to adjust, and overflow of the surge tank results. When spill prevention per se becomes an important criterion, a major revision in standard operating procedure, and perhaps a revised standard for the size of storage may be called for. Small leaks at shafts of pumps, agitators, and valve stems are frequently tolerated; and in the case of rotating equipment, is desirable for shaft lubrication and cooling. In the aggregate, such losses may be significant spills and should be prevented or contained. Sampling stations and procedures should also be reviewed to curtail unnecessary discard of small quantities of process fluids. Vent systems are potential points of accidental spill and, on hot service, may allow a continuous spill due to vaporization and condensation.

The major hazard in storage areas is catastrophic failure of the tank, an accident which on economic grounds alone justifies careful attention to tank design, maintenance and inspection. Containment of a large spill is desirably

provided by diking or curbing, but these systems need analysis as to proper operation both in standby status and in the event of a spill; safety principles and operating convenience can both be in conflict with spill prevention and the differences must be reconciled. Venting and tank overflow problems can be severe because of the cyclic nature of storage operations; accessories such as heating or cooling systems, agitators, instrumentation, and fire prevention control systems all can represent potential for spill.

Loading, unloading, and transfer operations are particularly accident prone. Where materials with obviously high hazard are involved, a high degree of reliability of the transfer system is achievable at a cost which is reasonable. This reliability can be achieved by provision of adequate equipment but also in large measure by strict adherence to well thought out procedures. Carelessness and shortcuts in operation can often occur. The same philosophy applied to less dangerous materials can be fruitful. Permanent piping, swing joint systems and flexible hoses can be used successfully for transfer and each has its place. Each has inspection and maintenance problems as well. The design of transfer lines must consider such questions as leaving them full or empty when idle, purging before and after use, protection with check valves, and manifolding. Multiple use of a transfer line should be avoided but when necessary on economic or other grounds the design should provide a clear indication to the operator that valves are properly set. Remote setting of valves, and panel indication of valve position are practical systems that could be more widely employed.

The emphasis on in-plant pollution control technology must be based equally on adequate, well-maintained equipment and on operational vigilance and supervision. Attention to these details will often result in reducing significantly not only the total loads on waste water treatment plants but, most importantly, reducing the variability of pollutant flows with a concomitant improvement in the quality of treated waste waters emitted to receiving bodies.

End-of-Pipe Treatment

Because of the scarcity of treatment plant performance data, it was determined to be reasonable to combine the Phase I and II treatment technology data for this study. A summary of the types of treatment technology which were observed during both phases is listed in Table 7-1. During the Phase II study, 70 individual plants were surveyed; however, 6 of

Table 7-1

Organic Chemicals Study
Treatment Technology Survey

Type of Treatment or Disposal Facility	Number of Plants Observed	
	Phase I	Phase II
Activated Sludge	7	9
Activated Sludge-aerated lagoon	2	0
Activated Sludge-polishing pond	0	1
Activated Sludge-solar evaporation pond	0	1
Trickling Filter-activated sludge	1	0
Aerated lagoon-settling pond	3	1
Aerated lagoon-no solids separation	2	1
Facultative Anaerobic lagoon	4	4
Stripping Tower	1	1
No current treatment - system in planning stage	3	7
To Municipal Treatment Plant	5	23
Deep-well disposal	2	6
Physical Treatment, e.g., API Separator	4	3
Activated Carbon	0	6
Incineration	0	1
TOTAL	34	64

the 70 plants were previously surveyed during the Phase I study. Table 7-1 has been prepared taking this duplication into consideration. Of the plants surveyed in Phase II which are subcategorized in A, B, C, or D over 80 percent provide their own waste treatment facilities, while 60 percent of the Subcategory D plants discharge to municipally owned treatment facilities.

A description of the treatment technologies that may be used with the wastes from this industry is first presented followed by data obtained in the Phase I and Phase II surveys.

Waste water treatment technology in the organic chemicals industry relies heavily upon the use of biological treatment methods. These are supplemented by appropriate initial treatment to insure that proper conditions, especially by pH controls and equalization, are present in the feed to the biological system.

Initial treatment for the removal of solids is not routinely required in the industry and is installed on a selective basis where the quantity of solids would interfere with subsequent treatment. The initial step in waste water treatment is often equalization basins for control of pH. Consequently, the disposal of sludges or solids from this initial treatment step is not the same type of problem as encountered in municipal sewage systems.

Technologies for removal of pollutants from water have been investigated for many years. The technologies that appear applicable to the waste waters of this industry are identified in the following paragraphs.

There are many variations of the basic activated sludge process that can be used with success. There are also many variations of treatment system operation that can be incorporated to assist in meeting effluent limits and there are many approaches to upgrading existing systems when they fail to perform effectively. Specific plants in this industry have modified their operation and design to achieve better performance. Reports on such modifications can be noted in the literature. Manuals to improve the design and performance of treatment systems are available from the Environmental Protection Agency. The available design, operational and upgrading techniques are within the capability of the organic chemicals industry to consider and apply.

Oil Removal

For those waste waters having significant quantities of oil, gravity separators are particularly useful. The API separator is the most widely used gravity separator. The basic design is a long rectangular basin, with enough detention time for most of the oil to float to the surface and be removed. Most API separators are divided into more than one bay to maintain laminar flow within the separator, making the separator more effective. API separators are usually equipped with scrapers to move the oil to the downstream end of the separator where the oil is collected in a slotted pipe or on a drum. On their return to the upstream end, the scrapers travel along the bottom moving the solids to a collection trough. Any sludge which settles can be dewatered and either incinerated or disposed of as landfill.

The gravity separator usually consists of a pre-separator (grit chamber) and a main separator, usually rectangular in shape, provided with influent and effluent flow distribution and stilling devices and with oil skimming and sludge collection equipment. It is essential that the velocity distribution of the approach flow be as uniform as possible before reaching the inlet distribution baffle.

Another type of separator that has been used in refineries is the parallel plate separator. The separator chamber is subdivided by parallel plates set at a 45° angle, less than six inches apart. This increases the collection area while decreasing the overall size of the unit. As the water flows through the separator, the oil droplets coalesce on the underside of the plates and travel upwards where the oil is collected. The parallel plate separator can be used as the primary gravity separator, or following an API separator.

If the effluent from the gravity separators is not of sufficient quality to insure effective treatment before entering the biological or physical-chemical treatment system, other processes such as clarifiers and dissolved air flotation units may be used to reduce the oil and solids concentration.

Clarifiers use gravitational sedimentation to remove oil and solids from a waste water stream. Often it is necessary to use chemical coagulants such as alum or lime to aid the sedimentation process. These clarifiers are usually equipped with a skimmer to remove any floating oil. Clarifiers used after a biological system normally do not have skimmers as there should be no floating oils at that

point. The sludge from the clarifiers is usually treated before final disposal.

Dissolved Air Flotation (DAF)

These systems are used to remove suspended material with a specific gravity close to that of water. The dissolved air system generates a supersaturated solution of waste water and air by pressurizing waste water and introducing compressed air, then mixing the two in a detention tank. This "supersaturated" waste water flows to a large flotation tank where the pressure is released, thereby generating numerous small air bubbles which effect the flotation of the suspended organic material by one of three mechanisms: 1) adhesion of the air bubbles to the particles of matter; 2) trapping of the air bubbles in the floc structure of suspended material as the bubbles rise; and 3) adsorption of the air bubbles as the floc structure is formed from the suspended organic matter. In most cases, bottom sludge removal facilities are also provided.

There are three process alternatives that differ by the proportion of the waste water stream that is pressurized and into which the compressed air is mixed. In the total pressurization process, the entire waste water stream is raised to full pressure for compressed air injection.

In partial pressurization only a part of the waste water stream, either a portion of the influent or recycled effluent, is raised to the pressure of the compressed air for subsequent mixing. If a sidestream of influent is pressurized, the pumping required in the system is reduced. In the recycle pressurization process, treated effluent from the flotation tank is recycled and pressurized for mixing with the compressed air and then, at the point of pressure release, is mixed with the influent waste water. Operating costs may vary slightly, but performance should be essentially equal among the alternatives.

Improved performance of the air flotation system is achieved by coagulation of the suspended matter prior to treatment. This is done by pH adjustment or the addition of coagulant chemicals, or both. Aluminum sulfate, iron sulfate, lime, and polyelectrolytes are used as coagulants in the raw waste. These chemicals are essentially totally removed in the dissolved air unit, thereby adding little or no load to the downstream waste treatment systems. However, the resulting float and sludge may become a less desirable raw material for recycling as a result of chemical coagulation addition. A slow paddle mix will improve coagulation. One

of the manufacturers of dissolved air flotation equipment indicated a 60 percent suspended solids removal and 80 to 90 percent grease removal without the addition of chemicals. With the addition of 300 to 400 mg/l of inorganic coagulants and a slow mix to coagulate the organic matter, the manufacturer indicated that 90 percent or more of the suspended solids and more than 90 percent of the grease can be removed. Total nitrogen reduction between 35 and 70 percent was found in dissolved air units surveyed in the meat packing industry.

The reliability of the dissolved air flotation process and of the equipment is well established. The usefulness of the dissolved air process can be realized by proper installation and operation. The feed rate and process conditions must be maintained at the proper levels at all times to assure this reliability. This fact is not always understood, and thus full benefit is frequently not achieved.

Anaerobic Processes

The high concentrations of organic matter in the waste waters from this industry make these wastes suited to anaerobic treatment. Anaerobic or facultative microorganisms, which function in the absence of dissolved oxygen, break down the organic wastes to intermediates such as organic acids and alcohols. Methane bacteria then convert the intermediates primarily to carbon dioxide and methane. Much of the organic nitrogen present in the influent is converted to ammonia nitrogen. If sulfur compounds are present, hydrogen sulfide will be generated. Acid conditions are undesirable because methane formation is suppressed and noxious odors develop. Anaerobic processes are economical because they provide high overall removal of BOD_5 with low power cost and low land requirements. Two types of anaerobic processes that may be used are the anaerobic lagoon and the anaerobic filter.

Anaerobic lagoons are not widely used in this industry but could be used as the first step in a secondary treatment sequence. BOD removal efficiencies of over 50 percent generally can be achieved in the lagoons. These lagoons are relatively deep (3 to 5 meters, or about 10 to 17 feet), low surface area systems with typical waste loadings of 240 to 320 kg BOD_5/1,000 cubic meters (15 to 20 lb BOD_5/1,000 cubic feet) and detention times of five to ten days. A scum layer may be allowed to accumulate on the surface of the lagoon to retard heat loss, to ensure anaerobic conditions, and hopefully to retain obnoxious odors. Plastic covers of nylon-reinforced Hypalon, polyvinyl chloride, and styrofoam

have been used on occasion to reduce heat loss. The waste water flow inlet should be located near, but not on, the bottom of the lagoon. In some installations, sludge is recycled to ensure adequate anaerobic seed for the influent. The outlet from the lagoon should be located to prevent short circuiting of the flow and carry-over of the scum layer.

For best operation, the pH should be between 7.0 and 8.5. At a lower pH, methane-forming bacteria will not survive, the acid formers will predominate and the system will not perform effectively. At a high pH (above 8.5), acid-forming bacteria will be suppressed and lower the lagoon efficiency.

Advantages of an anaerobic lagoon system are initial low cost, ease of operation, and the ability to handle shock waste loads, and a consistent quality effluent. Disadvantages of an anaerobic lagoon are the hydrogen sulfide generated from sulfate-containing waters and the increased ammonia concentrations in the effluent. If acid conditions develop, severe odor problems result. Anaerobic lagoons used as the first stage in secondary treatment are usually followed by aerobic units. Anaerobic lagoons are not permitted in some states or areas where the ground water is high or the soil conditions are adverse (e.g., too porous), or because of odor problems.

The anaerobic filter represents the newest anaerobic treatment process. The unit is useful for the treatment of dilute soluble wastes and in denitrifying oxidized effluents for nitrogen control. The filter consists of a bed of submerged media through which waste flows in an upward direction. The anaerobic organisms grow within the bed and either cling to the media or grow in the voids. The filter has a large capacity for retaining microorganisms. Of the types of media that have been tested, one-inch rounded stones appear to be the best.

Wastes with COD concentrations of over 750 mg/l appear well suited for this process. COD removal efficiencies of 90+ percent have been obtained with hydraulic detention times greater than 18 hr and with wastes having COD concentrations up to 2,000 mg/l.

The microorganisms remain in the filter for a long time, even though the hydraulic retention time is short. No solids recycle is incorporated in the anaerobic filter. The filter responds to changing waste loads and has been indicated to operate well on a periodic basis.

Difficulties will be encountered with wastes that will clog the filter media and therefore high solids wastes are not appropriate unless solids removal precedes the anaerobic filter. The wastes must have adequate alkalinity to buffer any pH reduction during treatment. Initial start up of an anaerobic filter should be done carefully to establish the proper organisms. Once the methane organisms are established, oxidized conditions should not be permitted to occur in the filter.

Aerobic Lagoons

Aerobic lagoons (stabilization lagoons or oxidation ponds) are large surface area, shallow lagoons, usually 1 to 2.3 meters (3 to 8 feet) deep, loaded at a BOD_5 rate of 20 to 50 pounds per acre. Detention times vary from about one month to six or seven months; thus, aerobic lagoons require large areas of land.

Aerobic lagoons serve three main functions in waste reduction:

Allow solids to settle out;

Equalize and control flow;

Permit stabilization of organic matter by aerobic and facultative microorganisms.

If the pond is deep, 1.8 to 2.4 meters (6 to 8 feet), the waste water near the bottom may be void of dissolved oxygen and anaerobic organisms may be present. Therefore, settled solids can be decomposed into inert and soluble organic matter by aerobic, anaerobic, or facultative organisms, depending upon the lagoon conditions. The soluble organic matter is also decomposed by microorganisms. It is essential to maintain aerobic conditions in at least the upper six to twelve inches in shallow lagoons, since aerobic microorganisms cause the most complete removal of organic matter. Wind action assists in carrying the upper layer of liquid (aerated by air-water interface and photosynthesis) into the deeper portions. The anaerobic decomposition generally occurring in the bottom converts solids to liquid organics, which can become nutrients for the aerobic organisms in the upper zone.

Algae growth is common in aerobic lagoons. This currently is a drawback when aerobic lagoons are used for final treatment because the algae appear as suspended solids and contribute BOD_5. Algae added to receiving waters are thus

considered a pollutant. Algae in the effluent may be reduced by drawing off the lagoon effluent at least 30 cm (about 14 inches) below the surface, where concentrations are usually lower, maintenance cleaning of the lagoon, installation of a "polishing" clarifier or combination of these actions. Algae in the lagoon, however, play an important role in stabilization. They use CO_2, sulfates, nitrates, phosphates, water and sunlight to synthesize their own organic cellular matter and give off oxygen. The oxygen may then be used by other microorganisms for their metabolic processes.

The effluent quality of a lagoon system can be affected adversely during certain periods of the year by the algae generated in the lagoons. The quantity of algae in the lagoon effluent can be variable and result in difficulties in meeting the effluent limitations. These algae can settle out in the bottom of a receiving stream or lake, undergo death and degradation, exert an oxygen demand in effluent samples and in the stream, and will be measured as part of the solids in the effluent.

There are, however, a variety of approaches that can be used to control the quantity of solids in the effluent. Most of these approaches either are in use or have been demonstrated to the point that they can be used where needed. Under specific design and operational conditions, each approach can be economical. The more applicable approaches include microstraining, coalgulation-flocculation, land disposal, granular media or intermittent sand filtrations, and chemical control.

Microstrainers have been used successfully in numerous applications for the removal of algae and other suspended material from water. In a series of nine investigations over a period of years, an average removal of 89 percent of net plankton was observed. Microstraining requires little maintenance and can have practical application for the removal of algae from stabilization ponds or lagoons on an as needed basis.

Coagulation-flocculation, followed by sedimentation, has been applied extensively for the removal of suspended and colloidal material from water. Coagulation-flocculation requires competent operating personnel and adequate disposal of the sludge that will be produced.

Land disposal for all or a portion of the lagoons effluent during periods when the effluent limitations are not being met can be a feasible approach. The effluent limitations

are in mass units, thus a reduction in outflow to a stream during periods of high algae content may compensate for the increased solids concentrations and permit the mass limitations to be attained. Spray irrigation in a controlled manner onto adjacent land can be accomplished without additional environmental problems.

In filtration, the suspended material is removed by physical screening, sedimentation, and inter particle action. For separation of algae cells from lagoon effluents, granular media filtration can be economic and produce a satisfactory effluent.

Chemical measures for the control of excessive algae growths in lagoons are dependent upon the type, magnitude, and frequency of growth, the local conditions, and the degree of control that is necessary.

Recommended chemicals have included copper sulfate for algal control. Additional chemicals have been used with varying success. Recommendations usually should be directed to the specific problem within a specific body of water. For maximum effectiveness, algal control measures should be undertaken before the development of the algal bloom.

Thus, there are many alternatives that can be used for algae control and/or removal to assure that the lagoon effluent quality meets the described limitations. The approach of choice at a specific location will be a function of land availability, available operating personnel, degree of difficulty in meeting the limitations, and overall waste management economics.

Ice and snow cover in winter reduces the overall effectiveness of aerobic lagoons by reducing algae activity, preventing mixing, and preventing reaeration by wind action and diffusion. This cover, if present for an extended period, can result in anaerobic conditions. The adverse effects of this condition can be substantially overcome by supplemental aeration using submerged aerators. When there is no ice and snow cover on large aerobic lagoons, high winds can develop a wave action that can damage dikes. Riprap, segmented lagoons, and finger dikes are used to prevent wave damage. Finger dikes, when arranged appropriately, also prevent short circuiting of the waste water through the lagoon. Rodent and weed control, and dike maintenance are all essential for good operation of the lagoons.

Advantages of aerobic lagoons are that they reduce the suspended solids and colloidal matter, and oxidize the organic matter of the influent to the lagoon. They also permit flow control and waste water storage. Disadvantages are reduced effectiveness during winter months that may require supplemental aeration, increase design capacity, and require possible provisions for no discharge for periods of three months or more. In addition, there are relatively large land requirements, the potential algae growth problem leading to higher suspended solids, and odor problems for a short time in spring, after the ice melts and before the lagoon becomes aerobic again.

Aerobic lagoons usually are the last stage in secondary treatment and frequently follow anaerobic or anaerobic-plus-aerated lagoons. Large aerobic lagoons allow plants to store waste waters for discharge during periods of high flow in the receiving body of water or for irrigation purposes during the summer. These lagoons are popular in rural areas where land is available and relatively inexpensive.

Aerated Lagoons

The aerated lagoon is a smaller, deeper aerobic pond equipped with mechanical aerators or diffused air units. The addition of oxygen enables the aerated lagoon to have a higher concentration of microbes than the oxidation pond. The retention time in aerated lagoons is usually shorter, between three and ten days. Many aerated lagoons are operated without final clarification. As a result, biological solids are discharged in the effluent, causing the effluent to have high BOD_5 and solids concentrations. As the effluent standards become more strict, final clarification will be increasing in use.

Aerated lagoons use either fixed mechanical turbine-type aerators, floating propeller-type aerators, or a diffused air system for supplying oxygen to the waste water. The lagoons usually are 2.4 to 4.6 meters (8 to 15 feet) deep, and have a detention time ranging from hours to days. BOD_5 reductions in completely mixed aerated lagoons may range from 40 to 60 percent, with little or no reduction in suspended solids. Because of this, aerated lagoons are compared to extended aeration units without sludge recycle.

Advantages of this system are that it can rapidly add dissolved oxygen (DO) to meet the oxygen demand, provides BOD_5 reduction, and requires a relatively small amount of land. Disadvantages include the power requirements and the fact that the aerated lagoon, in itself, usually does not

reduce BOD_5 and suspended solids adequately to be used as the final stage in a high performance secondary system.

Activated Sludge

Controlled biological treatment using activated sludge or one of its modifications can be used to treat the wastes from the organic chemicals industry. In the conventional activated sludge process, recycled biologically active sludge or floc is mixed in aerated tanks or basins with waste water. The microorganisms in the floc adsorb organic matter from the wastes and convert it by oxidation-enzyme systems to such stable products as carbon dioxide, water, and sometimes nitrates and sulfates or nitrogen gas (denitrification). The detention time required for adequate waste stabilization depends on the type of waste and its concentration, but the average time is about six hours. The floc, which is a mixture of microorganisms (bacteria, protozoa, and filamentous types), acquired waste, and inert fractions, can assimilate organic matter rapidly when properly active; hence, the name activated sludge. Oxygen is introduced by mechanical aerators, diffused air systems, or other means.

From the aeration tank, the mixed sludge and waste water, in which little nitrification generally has taken place, are discharged to a sedimentation tank. Here the sludge settles, producing a clear effluent, low in BOD_5, and a settled biologically active sludge. A portion of the settled sludge, normally about 20-25 percent, is recycled to serve as an inoculum and to maintain a high mixed liquor suspended solids content. Excess sludge is removed (wasted) from the system to thickeners and anaerobic digestion, to chemical treatment and dewatering by filtration or centrifugation, or to land disposal where it is used as fertilizer and soil conditioner to aid secondary crop growth.

This conventional activated sludge process can reduce BOD_5 and suspended solids up to 95 percent. However, it cannot readily handle shock loads and widely varying flows and therefore might require upstream flow equalization.

Although the microorganisms remove almost all of the organic matter from the waste being treated, much of the converted organic matter remains in the system in the form of microbial cells. These cells have a relatively high rate of oxygen demand and must be removed from the treated waste water before discharge. Thus, final sedimentation and

recirculation of biological solids are important elements in an activated sludge system.

Sludge is wasted on a continuous basis at a relatively low rate to prevent build-up of excess activated sludge in the aeration tank. Shock organic loads usually result in an overloaded system and poor sludge settling characteristics. Effective performance of activated sludge facilities requires pretreatment to remove inhibiting material. Equalization also is useful to prevent shock loadings from upsetting the aeration basin. Because of the high rate and degree of organic stabilization possible with activated sludge, application of this process to the treatment of organic chemicals waste waters has been receiving increasing attention.

Many variations of the activated sludge process are currently in use. Examples include: the tapered aeration process, which has greater air addition at the influent where the oxygen demand is the highest; step aeration, which introduces the influent waste water along the length of the aeration tank; and contact stabilization. The contact stabilization process is useful where the oxygen demand is in the suspended or colloidal form. The completely mixed activated sludge plant uses large mechanical mixers to mix the influent with the contents of the aeration basin, decreasing the possibility of upsets due to shock loadings. The Pasveer or oxidation ditch is a variation of the completely mixed activated sludge process that is widely used in Europe. In this process, horizontal cage rotors are used to provide aeration and mixing in a narrow oval ditch.

The activated sludge process has several disadvantages. Because of the amount of mechanical equipment involved, its operating and maintenance costs are higher than other biological systems such as aerated lagoons or aerobic ponds. The small volume of the aeration basin makes the process more subject to upsets than either oxidation ponds or aerated lagoons.

The activated sludge process is capable of achieving very low concentrations of BOD_5, COD TSS, and oil, dependent upon the influent waste loading and the particular design basis. Reported efficiencies for BOD_5 removal are in the range of 80 to 99 percent.

Filtration

A variety of filters can be used to remove the solids in a treated waste water: intermittent sand filters, slow sand

filters, rapid sand filters and mixed media filters. BOD_5 removal occurs primarily as a function of the degree of solids removal. The effluent from the sand filter is of high quality. A summary of available information indicates that effluent suspended solids concentrations of less than 10 mg/l can be met. Although the performance of a sand filter is well known and documented, it is not in common use in the organic chemical industry because use of refinements of this type has not been needed to reach current waste water standards.

Waste water filtration technology has been applied to biological treatment effluents for some time but with greater rapidity in the past decade. Major use has been with municipal waste waters but it has also been used for industrial waste waters. A chemical plant in England used sand filtration for effluent solids reduction prior to 1960.

Filtration has been applied to biologically treated waste waters in the petroleum refining industry. A full scale mixed media filtration system is presently operating at the Marathon Oil Company, Robinson, Illinois. Review of the self-reporting data from the facility after installation of the filters and after 20 months of operation indicated the following removal efficiencies by the filter: BOD-22%, TSS-72%. The average concentration of BOD and TSS applied to the filters was 12.3 and 42 mg/l respectively.

Knowledge of waste water filtration technology has progressed to the point that design manuals and information are readily available. There is ample reason to believe that waste water filtration can be applied to the biologically treated wastes from the organic chemicals industry.

A slow sand filter is a specially prepared bed of sand or other mineral fines on which doses of waste water are intermittently applied and from which effluent is removed by an under-drainage system.

It removes solids primarily at the surface of the filter. The rapid sand filter is operated to allow a deeper penetration of suspended solids into the sand bed and thereby achieve solids removal through a greater cross section of the bed. The rate of filtration of the rapid filter is up to 100 times that of the slow sand filter. Thus, the rapid sand filter requires substantially less area than the slow sand filter; however, the cycle time averages about 24 hours in comparison with cycles of up to 30 to 60 days for a slow sand filter. The larger area required for

the latter means a higher first cost. For small plants, the slow sand filter can be used as tertiary treatment. The rapid sand filter can be applied following secondary treatment. If a rapid sand filter were used as secondary treatment, it would tend to clog quickly and require frequent backwashing, resulting in a high water use. This wash would also need treatment prior to discharge particularly if the rapid sand filter were used in secondary treatment applications with only conventional solids removal upstream in the plant. Thus its use generally occurs after secondary treatment.

The rapid sand filters operate essentially unattended with pressure loss controls and piping installed for automatic backwashing. They are contained in concrete structures or in steel tanks.

In a rapid sand filter, as much as 80 percent of the head loss can occur in the upper few inches of the filter. One approach to increase the effective filter depth is the use of more than one media in the filter. Other filter media have included coarse coal, heavy garnet or ilmenite media, and sand. There is no one mixed media design which will be optimum for all waste water filtration problems.

Although a mixed media filter can tolerate higher suspended solids loadings than can other filtration processes, it still has an upper limit of applied suspended solids at which economically long runs can be maintained. With activated sludge effluent suspended solids loadings of up to 120 mg/l, filter runs of 15-24 hour at 5 gpm/ft^2 have been maintained when operating to a terminal head loss of 15 feet of water.

The effluent quality produced by plain filtration of secondary effluents is essentially independent of filter rate within the range of 5-15 gpm/ft primarily due to the high strength of the biological floc. The following quality of filter effluents is presented as general guides to the suspended solids concentration which might be achieved when filtering a secondary effluent of reasonable quality, without chemical coagulation: high rate trickling filter, 10-20 mg/l, two stage trickling filter, 6-15 mg/l, contract stablization, 6-15 mg/l, conventional activated sludge plant, 3-10 mg/l, and activated sludge plant with a load factor less than 0.15, 1-5 mg/l.

The slow sand filter has been in use for 50 years and more. It has been particularly well suited to small cities and isolated treatment systems serving hotels, motels,

hospitals, etc., where treatment of low flow is required and land and sand are available. Treatment in these applications has been of sanitary or municipal-type raw waste. Rapid sand filters have received most attention as the principal method to treat water supplies. More recently, applications as a tertiary treatment mode for municipal and joint municipal-industrial waste water facilities have proven successfuly. Multi-media filters were developed for general use in the mid 1960's. These filters also have been used for potable water treatment and tertiary treatment of waste water since that time.

The reliability of all principal types of filters seems to be well established. When the sand filter is operated intermittently, there should be little danger of resultant discharge of untreated effluent or poor quality effluent. The need for bed cleaning becomes evident with the reduction in quality of the effluent or in the increased cycle time, both of which are subject to monitoring and control.

With larger sized slow sand filters, the labor in maintaining and cleaning the surface should receive adequate consideration. Cleaning of the rapid sand filter requires backwashing of the bed of sand. Backwashing is an effective cleaning procedure and the only constraint is to minimize the washwater required in backwashing, since this must be disposed of in an appropriate manner other than discharging a stream. Chlorination, both before and after sand filtration, particularly in the use of rapid filters may be desirable to minimize or eliminate potential odor problems and slimes that may cause clogging.

The rapid sand filter has been used extensively in water treatment plants. Its use in tertiary treatment of secondary treated effluents appears to be a practical method of reducing BOD_5 and suspended solids to levels below those expected from conventional secondary treatment.

Carbon Adsorption

Activated carbon can be used to reduce the pollutional load of many kinds of waste waters. It is particularly well suited for removal of various dissolved organic materials. Most but not all dissolved organics can be adsorbed by carbon. The exact degree of removal from the liquid phase depends upon a number of factors. An important aspect of carbon adsorption is its capability of removing organics which are not completely removed by conventional biological treatment. Since some biodegradable organics are also

adsorbable, carbon can be used in either of two ways: to upgrade or to replace conventional biological treatment.

Carbon removes dissolved organics through the action of two distinctly different mechanisms. The first is adsorption, which removes the dissolved organics from solution. Organic molecules in solution are drawn to the porous surface of the carbon granule by inter-molecular attraction forces, where the organics become substrates for biological activity. Biodegradation is thus the second mechanism by which carbon improves water quality. Adsorption is the principal mechanism by which the dissolved organics are removed from solution. Adsorption is probably predominant when a carbon column is first put into service. As operation proceeds, however, the biological process grows in importance as the numbers of microorganisms increase.

Waste water treatment with activated carbon involves two major and separate process operations. The water is contacted with the carbon by passing it through a vessel filled either with carbon granules or with a carbon slurry. Impurities are removed from the water by adsorption when sufficient contact time is provided. The carbon system usually consists of a number of columns or basins used as contactors. These are connected to a regeneration system.

After a period of use, the carbon adsorptive capacity is exhausted. The carbon must then be taken out of service and regenerated thermally by combustion of the organic adsorbate. Fresh carbon is routinely added to the system to replace that lost during hydraulic transport and regeneration. These losses include both attrition due to physical deterioration and burning during the actual regeneration process.

The activated carbon process utilizes granular or powdered activated carbon to adsorb pollutants from waste water. The adsorption is a function of the molecular size and polarity of the adsorbed substance. Activated carbon preferentially adsorbs large organic molecules that are non polar.

The function of activated carbon is the removal of dissolved organics. However, while many organics are adsorbed, those molecules which are small or highly polar are not readily captured. Methanol, formic acid, or sugars, for example, are not easily adsorbed. Such readily biodegradable organic chemicals can be removed by biological treatment. Where such chemicals are in the waste water, activated carbon should be used after biological treatment. An important aspect of carbon adsorption is its capability of removing

organics which are not completely removed by conventional biological treatment.

Unless the suspended solids content of the waste water to be treated is low, prehaps less than 50-65 mg/l, it is advisable to employ dual-media filtration, chemical coagulation, or other particulate removal techniques before applying the waste water to the carbon bed. Activated carbon is too expensive to be used primarily as a filter medium. Thus an activated carbon unit frequently follows a solids removal process, usually a sand filter which prevents plugging of the carbon pores. From the filter, the water can flow to a bank of carbon columns arranged in series or parallel. As the water flows through the columns the pollutants are adsorbed by the carbon, gradually filling the pores. At intervals, portions of the carbon are removed to a furnace where the adsorbed substances are burnt off. The regenerated carbon is reused in the columns, with some makeup added, because of handling and efficiency losses.

Detailed evaluation of carbon adsorption as a possible waste water treatment technology began in 1960-61 as part of the mandate of Congress (PL 87-88) to investigate advanced waste treatment technology.

In recent years, many carbon adsorption applications have been evaluated on a full scale. These include granular activated carbon, powdered activated carbon, carbon adsorption as the entire waste water treatment process, carbon added to existing activated sludge systems, and carbon adsorption following biological treatment. The latter appears to be the most applicable for the wastes from the organic chemicals industry. Activated carbon technology has been demonstrated and shown to be feasible in a number of applications of granular activated carbon systems currently in use by industry.

Process designs for carbon adsorption systems are readily available from consultants and equipment manufacturers. Process design procedures are available in the literature and a design manual is available from the Environmental Protection Agency. Several of the companies producing organic chemicals have subsidiaries or components that have developed significant practical experience on carbon adsorption and are attempting to market that experience by providing services to other industries in the treatment of their wastes.

The effluent quality obtainable from granular carbon treatment depends on the character of the waste water being

treated. Therefore, in documenting the probable effluent quality of carbon plants, the nature of the raw waste water and the type of pretreatment is important.

Other Technology

Among the available waste water treatment technologies, the following have reached a reasonable stage of development and/or can be transferred from other industries when their unique capabilities are required.

Ammonia Stripping

The removal of ammonia from alkaline solution is the major potential application for air stripping. Although the process has been demonstrated in moderately large operations, its selection will depend upon the nature of the waste waters and requirements for the removal of nitrogenous substances. Scale formation in equipment, typical of a cooling tower configuration, can cause operational problems or demand close control of the chemistry of the system. In addition, air stripping of ammonia is temperature sensitive, proceeding at slow rates at low temperatures. The stripped substances are usually in such low concentrations that they are not considered to be air pollutants.

Chemical Oxidation

Chemicals such as chlorine, permanganate, hypochlorite, and ozone may be used to chemically oxidize some pollutants. Breakpoint chlorination for destruction of ammonia in treated waters from municipal sewage plants has long been recognized and ozone has been used for the treatment of potable water. The application of oxidative chemicals requires that specific determination be made of their effectiveness in removing the pollutants, and in particular, to determine if the reaction products are innocuous. As a particular example, the chloramines produced by chlorine and ammonia are more toxic to aquatic life than the ammonia. Similarly, the toxic aspects of the chemicals must be carefully evaluated to insure that the removal of one type of pollution does not result in creating a different or, perhaps, even more severe pollution problem. It is expected that chemical oxidation will be employed on a highly selective basis such as in the destruction of cyanide where its overall effectiveness is assured.

Foam Separation

Surfactants added to a waste water followed by air diffused in the liquid to produce a foam can effect the concentration of various substances often found in waste waters. However, successful development above the pilot plant scale has not been demonstrated and its usefulness as a treatment technology will be limited.

Algal Systems

Nutrient removal by the growing of algae is well known; however, it has not achieved any significant acceptance due

primarily to (1) the necessity of having a relatively warm climate with high incidence of sunshine and (2) the difficulties of removing the algae from the waste water before discharge.

Incineration

Destruction of pollutants by combustion or incineration is technically feasible regardless of the concentration insofar as the products of combustion do not create an air pollution problem. At the present time, incineration of concentrated liquid wastes containing phenolic compounds is being practiced. Equipment is available for achieving incineration of virtually any type of waste; however, the use of supplementary fuel is usually required. Incineration is not frequently used because of the high cost of energy. In some instances where the removal of pollutants cannot be achieved in a less costly manner or because disposal of the removed pollutants still presents a severe problem, incineration may be an appropriate method of water pollution control

Wet Air Oxidation

The oxidation of organic pollutants by introducing air or oxygen into water under pressures of from 300 to 1800 psig has been primarily used for the destruction of sludges. For the oxidation to proceed autogenously, it is necessary that a sufficient concentration of oxidizable substances be present to provide the exothermic energy necessary to maintain the required temperatures. Partial oxidation of concentrated biological streams such as the sludges from initial and biological treatment results in a stabilized solid which can be used as a soil conditioner. Wet air oxidation will continue to be considered primarily for the destruction of concentrated pollutants such as slurries or sludges.

Liquid-Liquid Extraction

The transfer of mass between two immiscible phases, known as liquid-liquid extraction, is often capable of achieving high degrees of removal and recovery of selected components. The technology has been well developed in the chemical and nuclear fuel industries but has been infrequently applied to the treatment of waste water streams. Liquid-liquid extraction would be employed to remove a relatively valuable component or a particular noxious substance from a waste water stream prior to additional treatment. A typical example is the recovery of phenolic compounds. Loss of the

extracting liquid to the water stream must be considered since it may then be a pollutant which requires further removal before discharge of the treated waste water.

Ion-Exchange

The removal of ions from water by the use of ion-exchange resins has been well established in the field of water treatment. Man-made resins or naturally occurring minerals such as zeolites or clinoptilolite have been used. The removal of zinc from viscose rayon wastes by ion-exchange has been demonstrated; however, successful long-time operation has not been achieved. Ion exchange has been used for the removal of nitrates, and clinoptilolite has been shown to be effective in the removal of ammonium ion from waste waters. Although ion exchange can be an effective method for the removal of ionic species from waters, the economic necessity for regeneration of the ion-exchange media results in a concentrated liquid stream for which further disposal must be considered. The use of ion exchange in waste water treatment would be limited to the selective removal or concentration of pollutants for which more economically effective methods are not available. Since ion-exchange regenerates added mass to the waste stream from the regeneration, ultimate disposal of concentrated streams from ion-exchange systems will contain more total dissolved solids than removed from the waste waters.

Reverse Osmosis

Desalination research and development efforts have been responsible for the development of reverse osmosis as a method for removal of ionic species from waste waters. Nonionic species also can be removed; however, control of membrane fouling must be given special consideration. The major process advantage of reverse osmosis is its low energy demand when compared with evaporation and electrodialysis; however, the costs of replacement membranes may be an offsetting factor to the total cost picture. The applicability of reverse osmosis to the treatment of waste water streams can only be determined by laboratory and pilot plant tests on the waste water of concern. As in the case of ion exchange, reverse osmosis produces a concentrated stream containing the removed pollutants and further consideration must be given to its disposal.

Evaporation

Evaporation has been well developed and widely used for the desalination of seawater. Furthermore, it is a well developed operation in the chemical process industries. Direct evaporation is the most energy consuming of the water removal processes; therefore, elaborate multi-stage systems are required to effect energy economy. Its application to the concentration of selected waste water streams is established; however, evaporation is usually used in conjunction with other process operations where the energy demands and resulting concentrated solutions can be justified on the basis of most economic overall performance.

This approach can be expected to continue in the face of rising energy costs and increasingly stringent limitations on waste water discharges. The technical feasibility of evaporation will have to be determined for specific situations since a highly concentrated waste water may cause fouling of heat transfer substances. Also, volatile species which can be removed by the steam stripping action and, consequently, appear in the condensate would mean further treatment before reuse or discharge. The disposal of highly concentrated streams of pollutants must be considered.

Electrodialysis

Developed for the desalination of water, electrodialysis is a separation technique that would be expected to compete with ion exchange, reverse osmosis, freezing and evaporation for the removal of pollutants from waste water streams. As in the case of all of these, electrodialysis for waste water treatment must be chosen on the basis of achieving the necessary performance under required operating conditions.

PLANT SURVEY PROGRAM

Single-Stage Biological Treatment

During the plant survey program, historic waste water treatment plant performance data were obtained when available. The data were statistically analyzed, and, when possible, the individual plant performance was evaluated with respect to the original design basis. Subsequent to this evaluation, a group of plants was selected as being exemplary in performance as indicated by effectiveness of BOD_5 removal. These particular exemplary plants are indicated in Table 7-2, which is a summary of all of the historic performance data made available by industry for the purposes of the study. The amount of analytical data used in the statistical analyses are indicated in the "data base column" of Table 7-2. The following is a summary of the average reductions capable of exemplary treatment plants:

Table 7-2

Historic Treatment Plant Performance
50% Probability of Occurrence

Plant No.	Treatment System	Category	COD % Removal	COD Effluent mg/l	BOD % Removal	BOD Effluent mg/l	TOC % Removal	TOC Effluent mg/l	SS % Removal	SS Effluent mg/l	Data Base Duration (months)	Data Base Performance Period
1[1]	AL	D	75	320	97	10	--	--	--	--	6(Sept-Feb)	daily average
2[1,2]	AS-AL	C	96.4	470	--	--	--	--	--	163	12	daily average
3[1]	AS	D	63	200	93.5	16	--	--	--	55	12	monthly average
4[1]	AS	B	64.2	120	--	15	--	--	--	--	14	monthly average
5[1,2]	TF-AS	B	73.5	83	--	--	--	--	--	--	14	monthly average
6	AL	B-C	--	--	--	291	--	--	--	665	12	weekly average
7	AL	C	--	165	--	9.9	--	--	--	81	12	monthly average
8[1]	AL	B	--	75	--	23.5	--	--	--	24.3	12	monthly average
9[1]	AS	C	--	--	83	152	60	170	--	130	7(Aug-Feb)	daily average
10[1]	AS	B	74.5	80	90.1	20	--	--	--	--	12	weekly average
11[1,2]	AS-AL	C	--	--	99.7	20	97	100	-370	145	12	daily average
12	AS	A-B	85	97	--	59	--	--	--	--	12	monthly average
13	AS	B-C	--	610	--	294	--	295	--	189	14	monthly average
14	AS	B	--	--	73	410	42	780	--	280	14	monthly average
15	AL		--	226	--	63	--	--	--	--	6(July-Dec)	weekly average
16[1]	AS	D	--	--	82.5	362	--	--	--	289	8(Aug-Mar)	monthly average
17[1]	AS	D	67	1,760	--	--	--	--	--	--	6(June-Oct)	daily average
18	AS	D	25.4	1,520	63.6	303	--	--	--	480	12	weekly average
19[1]	AS	D	--	--	97.6	157	--	--	--	--	5(June-Sept)	monthly average
20[1]	AS	C	--	296	98.8	46.9	--	--	--	--	5(June-Sept)	weekly average
Exemplary Plant Average			74	378	93	82.2	79	135	--	134		
Exemplary Single Stage Plants - Average			69		92		60		--	65[3]		

[1] Plants considered to be exemplary in performance.

[2] Multiple-stage biological treatment.

[3] Plant 16 is not included in average.

Table 7-3

Treatment Plant Survey Data[1]

Plant No.	Treatment System	Category	COD % Removal	COD Effluent mg/L	Total BOD % Removal	Total BOD Effluent mg/L	TOC % Removal	TOC Effluent mg/L	TSS % Removal	TSS Effluent mg/L	TDS Effluent mg/L	Oil & Grease Effluent mg/L
2[2]	AS-AL	C	64	2,300	90	427	32	2,710	Negative	4,700	2,300	-
3[2]	AS	D	71	284	73	74	71	132	Negative	62	3,100	1[3]
4[2]	AS	B	57	214	82	13	35	80	40	14	2,900	4[3]
5[2]	TF-AS	B	59	133	92	12	43	61	97	44	1,430	2[3]
6	AL	B-C	66	980	73	235	11	573	Negative	362	3,000	11[3]
8[2]	AL	B	69	92	84	6	26	52	99	3	690	-
9	AS	C	75	595	92	75	69	242	Negative	50	3,810	12[3]
11[2]	AS-AL	C	94	337	99	16	27	343	Negative	145	2,690	1[3]
13	AS	B-C	65	940	90	177	64	470	120	338	1,520	6[3]
16[2]	AS	D	54.8	1,650	82.1	300	80.8	280	43.6	552	10,990	226[4]
17[2]	AS	D	60.0 77.3	1,400 1,000	81.4 90.0	240 310	63.4 76.8	410 360	Negative	1,300 732	3,750 4,060	24[4] 22[4]
18	AS	D	22.1	2,680	16.7	650	-	1,025	42.9	1,170	2,050	106[4]
19[2]	AS	D	59.5	5,100	69.8	1,800	55.8	1,700	Negative	2,500	8,360	-
20[2]	AS	C	96.2	317	99.5	19	96.6	114	Negative	100	1,950	19[4]
21	AL	C	62	600	78	27	66	47	89	30	9,800	-
22	AS	B	16.1	1,370	47.5	210	8.3	550	53.4	82	15,400	<.03[4]
23	AS	B	95.4	147	92.6	41	95.4	35	Negative	37	580	21[4]
Average[5]			72		87		58					

[1] Based on 24 hrs composite samples.
[2] Plants considered to be exemplary in performance based on historical data.
[3] Oil and grease are reported as carbon tetachloride extractables.
[4] Oil and grease are reported as Freon extractables.
[5] Includes exemplary plants as well as Plant 23.

	COD Removal percent	BOD Removal percent	TOC Removal percent	Effluent TSS mg/l
Exemplary Single- and Multiple-Stage Plants	74	93	79	134
Exemplary Single-Stage Plants	69	92	60	65

Major differences in performance data were observed for TOC removals because only two historic data points were available.

During the survey program, 24-hour composite samples were obtained in order to verify the plant historic performance data, as well as to provide a more complete waste water analytical profile. These results are presented in Table 7-3. The following is a summary of the average reductions capable of being attained by exemplary treatment as verified by composite sampling:

	COD Removal percent	BOD Removal percent	TOC Removal percent
Exemplary Treatment Plants	72	87	58

The results of the composite sampling program compared well with the historic data, thus, verifying the historic plant information. The TOC removal of 58 percent would seem to substantiate the lower value of 60 percent as previously indicated (Table 7-2). As indicated by the TSS removal data, 9 of the 17 plants surveyed had negative TSS removal. Over 75 percent of the plants had inadequate solids handling facilities.

There are very wide variations in the suspended solids data obtained in the verification sampling (Table 7-3). These variations are beyond the normal variations experienced at well designed and operated biological treatment plants. A major problem was that the biological sludge in many facilities is not wasted, thereby increasing TSS effluent levels. Unless one is thoroughly familiar with the operation of the particular plant surveyed, it is difficult to interpret TSS data, much less use it to set effluent limits. For this reason, recommendations concerning TSS for the technology levels BATEA and BADCT were based on the performance experience of adequately designed units functioning in other industries.

Multiple-Stage Biological Treatment

During the course of the plant surveys, three plants were observed to have multiple-stage biological treatment. Plant 5 (see Table 7-2) required two-stage treatment for phenol removal, while Plants 2 and 11 required it because of relatively high raw waste loads and rigid water quality criteria. Multiple biological treatment is being used in the industry and can achieve high pollutant removals. The Phase I recommendation that biological treatment be considered BPCTCA is further substantiated by the Phase II survey data.

Performance of Industry Treatment Systems

As part of the survey conducted for this phase of the industry, no waste water treatment technology was found that was unique to the organic chemicals industry. The application of end-of-pipeline waste water treatment technology throughout the industry includes similar operational steps. The waste water treatment technology presently used in the industry is generally applicable across all industry subcategories.

End-of-pipe treatment technology is based upon well established methods, such as biological treatment, which can be carried out in various types of equipment and under a wide variety of operating conditions. The treatment systems for the organic chemicals industry can be affected by intermittent, highly concentrated waste loads due to the nature of certain pollutant generating operations or to inadvertent spills and leaks. The effective control methods for such intermittent loads are to prevent their occurence or provide sufficient volumetric capacity in equalization basins to ameliorate their effect.

A combination of methods may be used depending upon the nature of the process operations, safety requirements (such as the dumping of reactors to prevent runway reactions and possible explosions), and the availability of land area for the construction of equalization basins. For presently-operating plants, the most practical solution is the installation of an equalization basin of sufficient volume and residence time to insure that any "slugs" of pollutants can be mixed into larger volumes. This will usually guarantee that concentration levels are lowered to the point where the operability of the ensuing treatment step, usually the biological system, will not be overly affected unless the pollutants are highly toxic to the microorganisms.

The importance of equalization prior to biological treatment cannot be overstressed when the potential exists for large variations in either flow or concentrations of waste waters. Equalization basin design may vary from simple basins, which prevent short circuiting of inlet waste waters to the basin outlet going into the waste water treatment plant, to basins which are equipped with mixers to insure rapid and even mixing of influent waste water flows with the basin volume. In either case, the operability and reliability of an equalization basin should be high with minimal expenditure of operating labor and power. The results are well-designed and well-operated equalization basins that insure that the subsequent treatment steps, especially those steps sensitive to fluctuating conditions (i.e., biological treatment), are not confronted with widely varying conditions which may drastically affecc overall performance.

The operability, reliability and consistency of biological waste water treatment systems are subject to a host of variables. Some of the most important are the nature and variability of both the flow and the waste water composition. The best overall performance of biological treatment systems is realized when the highest consistency of flow and waste water composition occurs. While it must be recognized that no waste water stream can be expected to have constant flow at constant composition, it is possible to insure that these effects are ameliorated by equalization basins. Equalization, coupled with attention to such items as the possible occurrence of chemicals toxic to microorganisms, is the basis for achieving the maximum potential in operability, reliability, and consistency of biological systems. Although in-line instrumentation such as pH, dissolved oxygen and total organic carbon analyzers are available, their usage, except for pH and, infrequently, dissolved oxygen, for in-line control is minimal. The reliability of some in-line instrumentation for control has not been developed to a degree where it is frequently used. Control of the biological waste water treatment process relies principally on adequate designs and judicious attention to the physical aspects of the plant. Well-trained, conscientious operators are most important in achieving the maximum potential reliability and consistency in biological treatment plants.

Achieving a high degree of operability and consistency in a waste water treatment plant is contingent upon the application of good process design considerations and an effective maintenance program. The most important factor is the incorporation of dual pieces of equipment where historical experience indicates that high maintenance or

equipment modification is apt to occur. Although the highest degree of performance reliability would be achieved by installing two independent waste water treatment facilities, each capable of handling the entire waste water load, practical installations and operating costs as well as the well-demonstrated operability of waste treatment plants, indicate that a judicious blend of parallelism, surge capacity, and spare equipment are the major factors to be considered. Some of the most critical parameters that should be incorporated in the design of waste water treatment for the organic chemicals industry are as follows:

1. Provision for surge capacities in equalization basins or special receiving basins to permit repair and maintenance of equipment.

2. Installation of excess treatment capacity or provisions for rapidly overcoming effects which may destroy or drastically reduce the performance of biologically based treatment systems.

3. Installation of spare equipment, such as pumps and compressors, or multiple units, such as surface aerators, so that operations can be continued at either full or reduced capacity.

4. Layout of equipment and selection of equipment for ease of maintenance.

Filtration

Supplemental organic pollutant and solids removal is being practiced within the industry in one particular case using a polishing pond. One major problem during summer periods is algal blooms which, if unchecked, can drastically increase the TSS and COD of the polishing pond effluent. In addition, the acreage requirements of this system limit its potential uniform application.

As described earlier, filtration can do an excellent job of removing particulate matter from the effluent of biological treatment systems. Where appropriate technology, such as filtration, is not routinely used in the industry and hence, operating treatment plant data is not available, the following approaches would be used in deciding whether filtration technology was appropriate for consideration: (a) utilize performance data from waste water treatment situations where filtration had been used, (b) attempt to obtain reasonable estimates using samples of biological

treatment plant effluent, or (c) a combination of these options. The combination option was investigated.

To quantify the effectiveness of effluent filtration for this industry, the following steps were taken. First, the existing literature and data on filtration of effluents from biological waste treatment plants were reviewed to ascertain the general performance that could be expected. Second, samples of the effluents from biological treatment plants treating organic chemical waste waters were tested using laboratory filter tests to see if the results of such tests appeared reasonable as compared to the results from other situations described in the literature. The results are presented in Table 7-4. Average percent COD, BOD, and TOC removals associated with filtration are 20, 17, and 20, respectively. Comparison of the laboratory and literature data revealed that filtration was a feasible technology for this industry.

Carbon Adsorption

Granular activated carbon technology is continuously being developed and is beginning to compete actively with biological treatment as a viable treatment alternative or as a biological treatment effluent polishing process for some industrial wastes. This technology has been applied to the waste of the organic chemicals industry. The technology has been used with other waste waters and has been demonstrated at the pilot plant and full scale plant levels. To identify whether carbon adsorption can be used with the waste waters from this industry, plants using activated carbon were surveyed and carbon adsorption isotherms were run on the effluent from biological waste treatment plants treating organic chemical industry wastes.

During the plant survey program, 6 activated carbon plants treating raw waste waters were surveyed, and the results are presented in Table 7-5. The most interesting fact is that domestic waste water treatment experience indicates that efficient treatment is provided with contact times between 10 and 50 minutes, while the design contact times in Table 7-5 vary between 22 and 660 minutes (calculated on an empty column basis). These higher contact times are required because of the much higher raw waste loads generated by industry.

The major problems encountered in trying to compare design criteria and present performance of carbon plants are as follows:

Table 7-4

Effectiveness of Filtration Tests on
Biological Treatment Plant Effluents

Plant	Percent Removal		
	COD	BOD	TOC
3	9	4	3
15	87	56	78
15	85	*	82
14	24	28	14
9	11	None	5
9	10	None	17
13	32	36	8
4	None	None	None
24	8	2	20
12	21	None	7
21	3	None	8
16	84.3	57.8	75.9
25	39.3	**	39.4
20	8.5	17.2	33.0
35	51.4	***	27.7
26	26.2	71.4	41.2
27	***	12.5	25.0
18	86.8	72.1	90.6
17	88.4	55.6	91.6
19	33.3	***	66.0
[1] Average of selected data	20	17	20
Average of all data	42	26 38****	37

[1] Average does not include plants 15, 16, 17, 18, and 26, since these plants have excessively high effluent TSS. These high effluent TSS values are the result of poor performance of the final clarifiers. The purpose of the filtration tests was to quantify the effectiveness of filtration on typical effluents from a properly designed and operated biological plant, the data from atypical effluents are excluded.

* Error in control BOD value

** No initial BOD determination.

*** Data not available.

****Average of samples excluding indeterminate answers.

1. In most cases, design loadings, both organic and hydraulic, have not yet been attained. This means the new plants are sometimes grossly under-loaded.

2. Thermal carbon regeneration is presently an art which is acquired only with actual operating experience. For this reason, start-up problems are often extended, and it is not unusual for the pollutant concentrations of the activated carbon effluent to be higher than the design value. This situation continues until the carbon is regenerated thoroughly.

3. Plants with insufficient spill protection and/or inadequate housekeeping practices may discharge specific low molecular weight hydrocarbons which are not amenable to adsorption. This situation results in an erratic plant performance.

The carbon adsorption isotherm is widely used to screen the applicability of different activated carbons, to calculate theoretical exhaustion rates, and determine if carbon adsorption technology can be applied to specific waste waters. The comparison of isotherm and design exhaustion rates for Plant 29 in Table 7-5 further substantiates the fact that isotherm data are preliminary and should not be used for design purposes. However, carbon isotherm data do indicate relative amenability of the particular waste water to treatment by carbon adsorption and to identify reasonable removal efficiencies. In addition, several existing plants in this and other industries use carbon in combination with activated sludge systems for industrial waste treatment.

To investigate the possibility of using activated carbon technology on the effluents from biological treatment plants treating organic chemical waste waters, series of carbon isotherms were run at standard conditions using a contact time of 30 minutes. The results of the isotherms are presented in Tables 7-6 and 7-7. BOD carbon isotherm data performed on the biological treatment plant effluents yielded only two usable data points. Average performance values are presented hereafter. Table 7-8 contains TOC and COD carbon exhaustion data from a recent survey made of plants in this and other industries.

Table 7-5

Organic Chemical Plants Using
Activated Carbon to Treat Raw Wastewaters

Plant	Pretreatment	Removal Efficiencies-%		Flows-gpd		Hydraulic Loading gpm/sq.ft.		Contact Time-minutes		Carbon Exhaustion Rate	
		Design	Present	Design	Present	Design	Present	Design	Present	Design	Isotherm
28	Solids Removal and Equalization 9-hr detention time	----	Polyol-11	100,000	55,000	5.6	3.0	22	40	0.4 lb. polyol / lb. carbon	----
29	Equalization 150-day detention time	TOC-94	TOC-89	20,000	7,000	0.49	0.17	540	1,550	0.07 lb. TOC / lb. carbon	0.19 lb. TOC / lb. carbon
30	Equalization, Neutralization and solids removal	Phenol-89	Phenol-94	750,000	500,000	4.6	3.1	69	104	.028 lb. phenol / lb. carbon	----
31	Equalization and Neutralization	----	TOC-91	30,000	20,000	----	----	660	912	----	----
32	Equalization and Neutralization	Phenol-99.9	Phenol-95	72,000	22,000	2.0	0.6	215	75	----	----
33	Equalization, Neutralization and solids removal	Color-90	----	800,000	----	7.7	----	27	----	5.4 lbs. color / lb. carbon	----

Table 7-6

Summary COD Carbon Isotherm Data
(Performed on Biological Treatment Plant Effluent)

Plant No.	Carbon Exhaustion Rate: lbs COD Removed / lb Carbon	Carbon Exhaustion Rate: lbs Carbon / 1,000 gallons	Max. Soluble COD Removal (%)	Category
14	0.035	232	22	B
15	0.8	8.9	87	
15	0.2	28.6	87	
3	1.35	1.87	74	D
9	0.30	13.9	84	C
9	0.36	13.3	75	
13	0.42	10.6		
13	0.36	12.6	70	B-C
4	0.51	2.2	57	B
24	0.34	32.2	69	B
12	4.5	0.27	87	B
21	0.11	21.4	3	C
16	.12	29.5	50.2	D
25	----------	----------	57.8	
20	4.0	.25	41.6	C
35	----------	----------	42.4	B-C
26	.45	2.0	72.8	A
18	----------	----------	83.4	D
23	.069	3.9	63.6	B
27	----------	----------	20.4	B
17	0.094	44.3	93.9	D
Average[1]	**.41**	**15.7**	**69.0**	

[1] The average does not include Plants No. 12, 14, 20 and 21.

Table 7-7

Summary TOC Carbon Isotherm Data
(Performed on Biological Treatment Plant Effluent)

Plant	Influent TOC (soluble) mg/L	Effluent TOC (Soluble) mg/L	TOC Removal %	Carbon Exhaustion: lbs. TOC Removed / lb. Carbon	Carbon Exhaustion: lbs. Carbon / 1,000 gal
16	87	58	33.4	---	---
25	43	5	88.4	.01	35.9
20	28	12	37.2	---	---
35	34	4	88.3	.13	2.25
26	20	2	90.0	1.35	.12
18	104	19	81.6	.0036	241
23				---	---
27	6	3	50.0	---	---
17	148	20	86.6	.0485	25.4
19					
Average [1]			87	.063	21.77

[1]Average includes Plant Nos. 17, 25, and 35.

Table 7-8

Summary of TOC and COD Carbon Exhaustion Rate

Plant	TOC Carbon Exhaustion Rate Pounds Per 1,000 Gallons*	Wastewater Influent Concentration(TOC)	Practical Effluent Objective	%TOC Removal @ Objective	COD Carbon Exhaustion Exhaustion Rate Pounds Per 1000 Gallons*	Wastewater Influent concentration(COD)	Practical Effluent Objective	% COD Removal @ Objective
A	1.8	18	3	83	3.5	47	<10	>89
B	2.1	22	2	90	2.0	75	<10	>87
C	1.9	186	37	80	11.8	520	22	96
D	6.2	100	15	85	9.7	275	10	96
E	14.0	200	6	97	5.6	405	35	91
F	4.5	19	2	89	2.4	50	<10	>80
G	8.4	105	15	86	4.4	290	<10	>96
H	4.6	82	3	96	2.6	220	17	92
I	3.6	60	5	92	7.3	190	60	68
J	9.2	114	9	92	18.8	215	<10	>95
Mean	5.6	91	10	89	6.8	229	19	89
Standard Deviation	3.9	65	11	6	5.3	154	16	9

*Minimum theoretical exhaustion rate based on use of two-stage fixed bed contacting system.

Parameter	Carbon Exhaustion Rate lbs removed/lb carbon	Soluble Pollutant Removal percent
COD	0.41	69
BOD	0.03	89
TOC	0.06	87

Inspection of the specific data in Tables 7-6 through 7-8 indicates that carbon adsorption has varying degrees of amenability with regard to cost effective waste water treatment. However, the data does indicate that biologically treated waste waters from the organic chemicals industry are readily treatable using activated carbon. Following identification of the feasibility, typical design data for carbon adsorption systems were used to establish the design of model BAT treatment systems for costing purposes. The laboratory data were not used to establish the design. The actual design data are identified in Chapter IX.

BPCTCA Treatment Systems

The review of the industry historic treatment plant data was to quantify BPCTCA reduction factors, which would then be applied to BPCTCA raw waste load values for each subcategory in order to generate recommended effluent limitation. Based on the previous discussions of biological treatment, the following pollutant reduction factors are considered achievable with BPCTCA treatment technology:

Parameter	Percent Reduction Factors Applied to Average BPCTCA Range	Average	Minimum Average Effluent Concentration mg/l
BOD1	83-99	93	20
COD		74	--
TSS			30

1Controlling Parameter

The BPCTCA effluent discharge recommendations are made only for BOD and TSS.

To evaluate the economic effects of the BPCTCA effluent limitations on the organic chemicals industry, it was necessary to formulate a BPCTCA treatment model. The model selected was single stage activated sludge. (See Figure 7-1.) It is recognized that specific industry plants may choose other biological treatment systems to meet the BPCTCA limitations. Since it is impossible to anticipate the cost

Figure 7-1

BPCTCA Waste Treatment Model

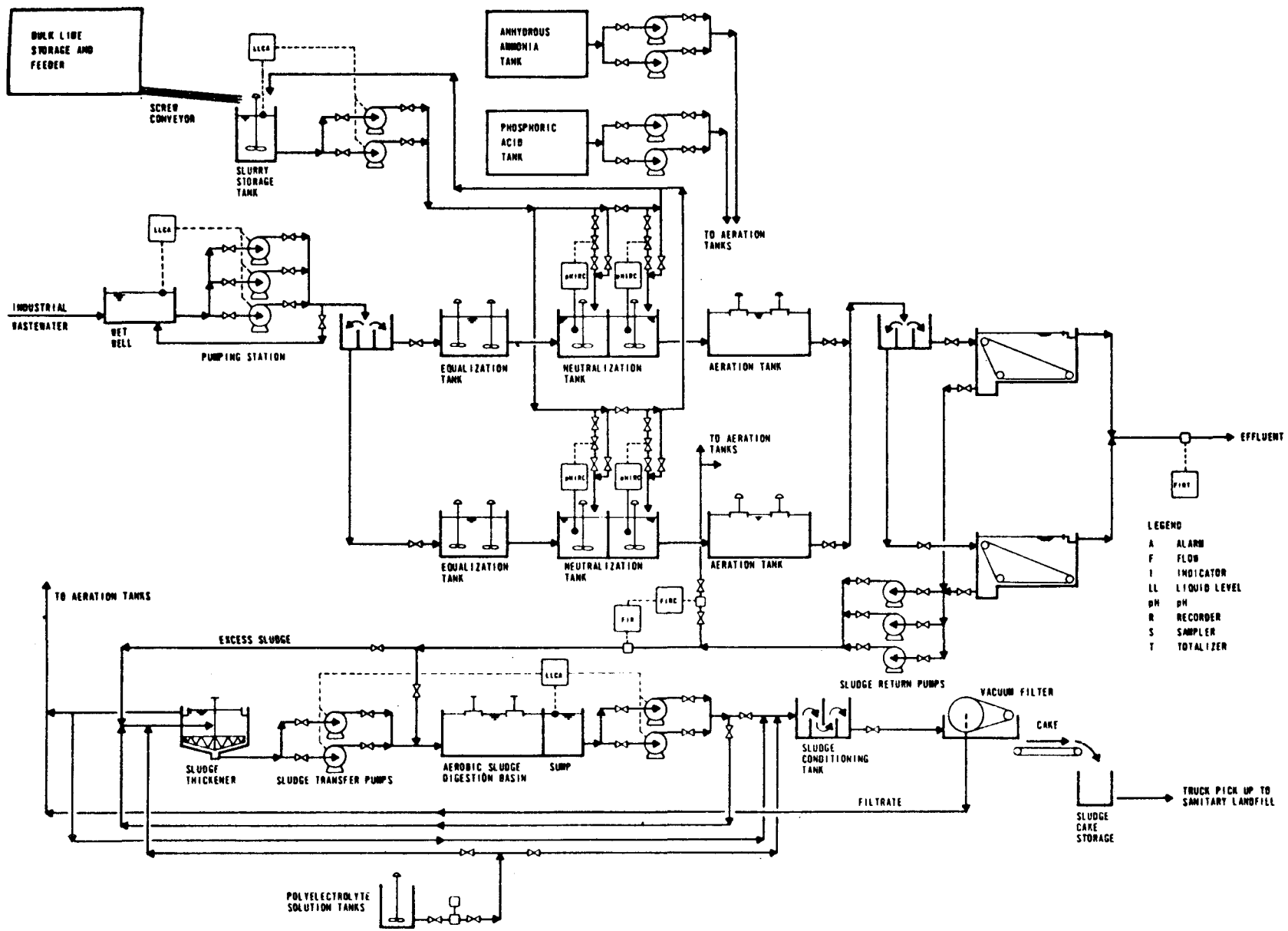

Figure 7-2

BATEA Waste Treatment Model

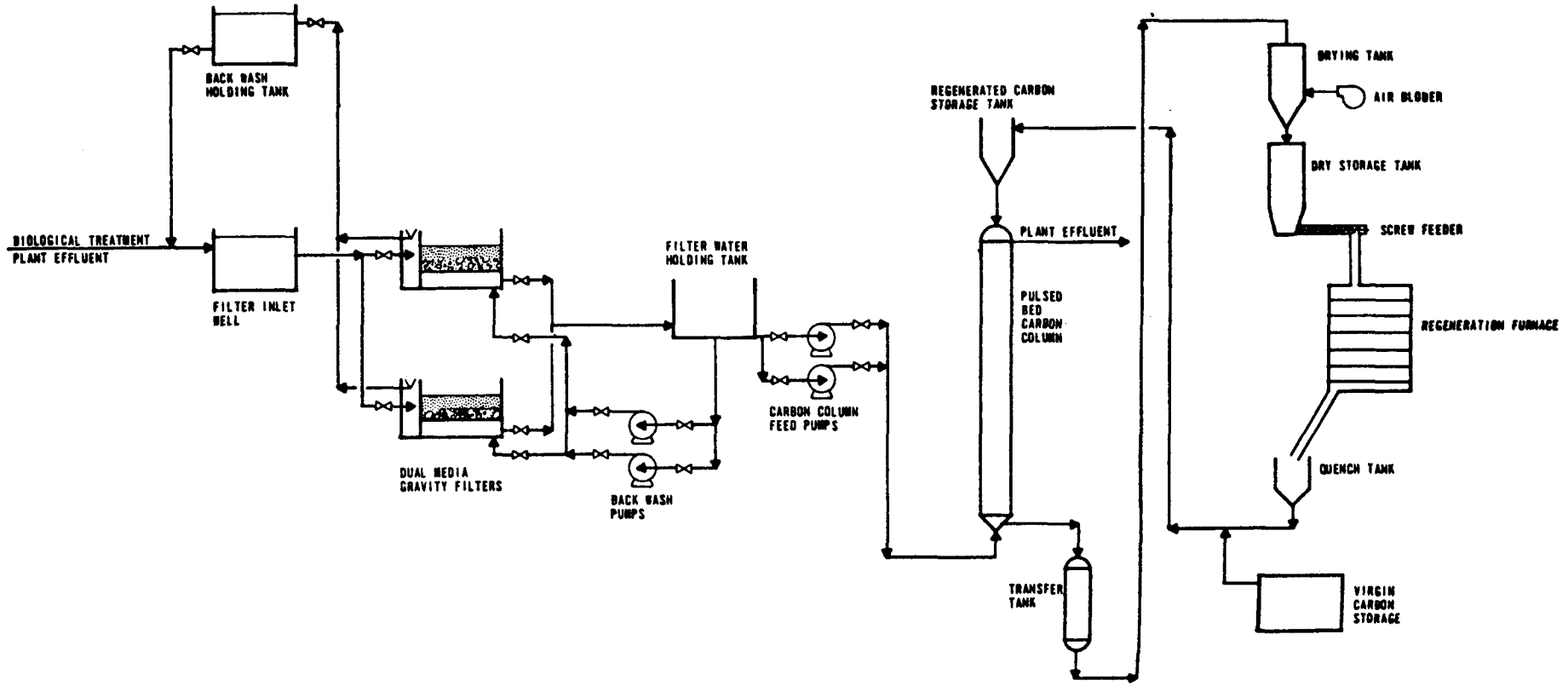

of every possible treatment system that could be used, a common system was chosen, single stage activated sludge. The model serves the function of representing a maximum effluent treatment cost which might actually be significantly lower due to in-process modifications or other methods of effluent treatment.

BATEA Treatment Systems

Based on the previous performance data from multiple-stage biological treatment plants, existing carbon treatment plants and various carbon isotherms, it has been possible to formulate waste reduction factors commensurate as BATEA treatment technology:

Parameter	Percent Reduction Factors Applied to BPCTCA Effluent Limitation	Minimum Average Effluent Concentration
BOD	89	10
COD	69	50
TSS		15

The BATEA effluent discharge limitations will have two controlling parameters, i.e., BOD and COD. The major emphasis, however, should be on COD removal since the major portion of the carbonaceous oxygen demanding materials should have been removed with BPCTCA technology.

The BATEA treatment model used for economic evaluation of the proposed limitations includes the BPCTCA treatment model followed by dual media filtration and carbon adsorption. A typical flow diagram is shown in Figure 7-2. The BATEA design basis and the unit sizing criteria are discussed in the Phase 1 study. The carbon regeneration facilities were sized using 0.41 lb COD removed/lb carbon, which is the average result as determined from the carbon isotherm data.

BADCT Treatment Systems

Based on the previous filtration data, it has been possible to formulate waste reduction factors commensurate as BADCT treatment technology:

Parameter	Percent Reduction Factors Applied to BPCTCA Effluent Limitation	Minimum Average Effluent Concentration mg/l
BOD	17	--
COD	20	--
TSS		15

The BADCT treatment model used for economic evaluation of the proposed limitations includes the BPCTCA treatment model followed by dual media filtration.

Although dual media filtration of biologically treated wastewaters has not been practiced on a plant scale in this industry, at least one other industry, the petroleum refining industry, does successfully employ this technology. However, rather than adopt performance requirements based on results obtained in other industries, the removals of pollutants observed in the laboratory filtration tests were used to establish removal factors.

Filtration

Laboratory experiments were conducted with the recognition that results were not actual operating data, but rather that the results would allow a comparison to be made with existing data resulting from filtration of other biologically treated effluents. The laboratory experiments therefore did provide reasonable results, as compared to data in the literature. In adopting filtration as an appropriate technology for this industry in the above manner, the judgement was made that such technology has been adequately demonstrated, if not routinely applied.

In using the average removals from the laboratory filtration studies to establish the BADCT limitations, a conservative approach was taken. Available data from other situations indicates that higher percent removals can be achieved. In determining the average percent removals (Table 7-4), certain data were not included (plants 15, 16, 17, 18, and 26) because it was felt that the data from these plants would bias the results, i.e., could indicate higher results than otherwise might occur. If all of the data had been used the average percent removals would have been: COD 42%; BOD 26%; and TOC 31%. These removals are about double those chosen as representative.

In choosing the values that were used as indicative of the results of filtration, reasonable conservative percent removals were chosen. Such a choice used the best available technical judgement and an evaluation of results obtained by filtration in other waste water situations. Reliance was not placed solely on the laboratory filtration tests.

SECTION VIII

COST, ENERGY AND NONWATER QUALITY ASPECTS

Cost

This section provides quantitative cost information relative to assessing the economic impact of the proposed effluent limitations on the organic chemicals industry. In order to evaluate the economic impact on a uniform treatment basis, end-of-pipe treatment models were proposed which will provide the desired level of treatment as follows:

Technology Level	Treatment Model
BPCTCA	Single-Stage Activated Sludge.
BADCT	Activated Sludge and Filtration.
BATEA	Activated Sludge, Filtration, and Carbon Adsorption.

The method used to attain the effluent limitations whether through in-plant controls or by end-of-pipe treatment is left up to the individual manufacturer as to which is the most attractive economically.

Extensive annual and capital cost estimates were prepared for numerous end-of-pipe treatment models, which were presented in the Phase 1 study. As an expedient, these cost estimates were linearly extrapolated to include the similar Phase 2 treatment models.

The capital and annual cost for BPCTCA, BATEA and New Sources are presented in Table 8-1 for each product/process segment. It is noted that these costs reflect treatment of wastes from a single product plant situation. The relevant flow and production rates are also included in Table 8-1 for each situation. These rates were based upon those which are typical for each process.

These costs are presented with the understanding that most plants in this industry are multi-product plants which treat a mixture of waste waters. Thus, in some cases, costs are larger than actual costs for the multi-product plant due to economies of scale. In evaluating the economic impact of the costs of treatment, the costs presented in Table 8-1 may need to be adjusted to account for the economy of scale for the particular plant's actual flow.

Table 8-1

ORGANIC CHEMICALS INDUSTRY (PHASE II)
ECONOMICS SUMMARY

(All Costs Shown Are Cumulative Totals)

			BPCTCA				BADCT				BATEA			
				Annual Costs				Annual Costs				Annual		
	Production Lbs/Day	Waste-Water Gal/Day	$ Capital Cost	$ Per Year	$ Per 1000 Gal.	$ Per 1000 Lbs.	$ Capital Cost	$ Per Year	$ Per 1000 Gal.	$ Per 1000 Lbs.	$ Capital Cost	$ Per Year	$ Per 1000 Gal.	$ Per 1000 Lbs.
Cumene	822,000	33	Zero	3,600	300	0.012	Zero	3,600	300	0.012	Zero	3,600	300	0.012
Para-Xylene	550,000	2,900	383,000	148,000	135	0.72	398,000	151,000	138	0.73	413,000	176,000	162	0.86
BTX Aromatics	1,041,000	5,800	454,000	160,000	72.8	0.41	479,000	164,000	74.8	0.50	495,000	193,000	88.8	0.58
Chlorotoluene	30,000	436,000	953,000	281,000	1.77	25.7	1,150,000	314,000	1.98	28.8	1,400,000	383,000	2.41	35.0
Chloromethanes	356,000	120,000	583,000	190,000	4.35	1.47	676,000	206,000	4.71	1.59	839,000	257,000	5.88	1.99
Chlorobenzene	300,000	1,800	386,000	143,000	217	1.31	401,000	156,000	237	1.42	416,000	182,000	277	1.66
Diphenylamine	100,000	6,300	411,000	153,000	64.6	4.08	436,000	158,000	66.4	4.19	519,000	171,000	72.4	4.57
Perchloroethylene	50,000	32,000	424,000	160,000	13.7	8.87	468,000	167,000	14.3	9.28	536,000	203,000	17.4	11.1
Phthalic Anhydride	342,000	24,000	505,000	171,000	19.5	1.37	544,000	178,000	20.3	1.43	577,000	222,000	25.3	1.78
Tricresyl Phosphate	50,000	168,000	762,000	225,000	3.64	12.2	880,000	245,000	3.97	13.3	1,100,000	308,000	4.99	16.7
Methylethyl Ketone	274,000	43,000	1,660,000	498,000	31.7	4.98	1,710,000	507,000	32.3	5.07	1,840,000	530,000	35.0	5.50
Hexamethylenediamine	548,000	66,000	3,600,000	916,000	38.1	4.58	3,670,000	928,000	38.6	4.64	4,360,000	1,160,000	48.2	5.81
Hexamethylenediamine	548,000	72,000	3,350,000	805,000	30.6	4.04	3,420,000	817,000	31.1	4.10	3,890,000	960,000	36.5	4.82
Adiponitaile	548,000	642,000	10,700,000	2,800,000	11.9	14.0	11,000,000	2,850,000	12.1	14.2	12,800,000	3,780,000	16.1	18.9
Benzoic Acid	164,000	56,000	5,640,000	1,490,000	72.8	24.8	5,700,000	1,500,000	73.3	25.0	6,080,000	1,620,000	79.1	27.0
Methylchloride	82,000	118,000	1,670,000	470,000	10.9	15.7	1,760,000	485,000	11.3	16.2	2,150,000	603,000	14.0	20.2
Maleic Anhydride	137,000	38,000	711,000	691,000	49.8	13.7	711,000	691,000	49.8	13.7	711,000	691,000	49.8	13.7
Ethyl Acetate	503,000	78,000	539,000	182,000	6.41	1.00	629,000	198,000	6.94	1.08	BADCT	BADCT	BADCT	BADCT
Propyl Acetate	197,000	28,000	RWL	RWL	RWL	RWL	RWL	RWL	RWL	RWL	RWL	RWL	RWL	RWL
Propylene Glycol	500,000	330,000	RWL	RWL	RWL	RWL	RWL	RWL	RWL	RWL	RWL	RWL	RWL	RWL
Oxalic Acid	27,400	939,000	1,410,000	402,000	1.17	40.0	1,750,000	467,000	1.36	46.5	2,230,000	576,000	1.68	57.4
Fornic Acid	50,000	1,710,000	RWL	RWL	RWL	RWL	RWL	RWL	RWL	RWL	RWL	RWL	RWL	RWL
Cyclohexanone Oxime	150,000	40,000	SEE CAPROLACTAM											
Isopropanol	1,370,000	366,000	1,070,000	293,000	2.20	0.62	1,270,000	328,000	2.46	0.69	1,730,000	446,000	3.35	0.93
Calcium Stearate	80,000	519,000	1,390,000	365,000	1.93	12.0	640,000	408,000	2.16	13.5	2,140,000	525,000	2.78	17.5
Hexamethylenetetramine	22,000	80,000	850,000	241,000	8.24	30.0	940,000	256,000	8.75	32.0	1,290,000	358,000	12.2	44.7
Hydrazine	6,000	2,300	522,000	179,000	213	81.7	558,000	185,000	220	84.5	574,000	218,000	260	99.5
Isobutylene	137,000	335,000	1,560,000	389,000	3.18	8.22	1,740,000	420,000	3.43	8.84	2,450,000	624,000	5.1	12.9
Sel-Butyl Alcohol	218,000	16,400	1,900,000	557,000	93.1	7.38	1,950,000	565,000	94.5	7.48	2,530,000	741,000	124	9.69
Acrylonitrile	658,000	353,000	2,400,000	677,000	5.25	3.18	2,600,000	712,000	5.52	3.32	6,430,000	2,040,000	15.8	8.86
Synthetic Cresols	50,000	2,000	203,000	124,000	170	6.82	203,000	124,000	170	6.82	203,000	124,000	170	6.82
Caprolactam	685,000	2,390,000	22,700,000	5,610,000	6.43	22.4	23,200,000	5,710,000	6.55	22.8	26,800,000	6,760,000	7.75	27.0
Para-Aminophenol	50,000	75,600	2,820,000	632,000	22.9	32.4	2,890,000	644,000	23.3	33.0	3,220,000	740,000	26.8	37.9
Propylene Oxide	548,000	4,180,000	11,100,000	12,490,000	1.62	12.7	11,800,000	2,630,000	1.71	13.4	13,600,000	3,000,000	1.96	15.3
Pentaerythritol	68,500	83,800	1,270,000	1,390,000	45.4	55.6	1,270,000	1,390,000	45.4	55.6	1,270,000	1,390,000	45.4	55.6
Saccharin	25,000	807,000	3,640,000	1,010,000	3.44	111	3,910,000	1,060,000	3.60	116	5,280,000	1,460,000	4.96	160
Ortho-Nitroaniline	50,000	1,610,000	1,530,000	446,000	0.76	24.7	1,950,000	522,000	0.89	28.6	2,910,000	752,000	1.27	40.8
Para-Nitroaniline	65,000	305,000	911,000	259,000	2.32	10.9	1,110,000	295,000	2.63	12.3	1,740,000	455,000	4.09	19.2
Pentachlorophenol	50,000	16,100	503,000	168,000	28.5	9.2	546,000	175,000	29.8	9.59	572,000	255,000	43.4	14.0
Fatty Acids	150,000	504,000	1,760,000	488,000	2.65	8.91	2,000,000	530,000	2.87	9.65	2,660,000	700,000	3.79	12.7
Fatty Acid Derivatives	150,000	116,000	1,500,000	389,000	9.17	7.06	1,610,000	402,000	9.47	7.29	2,180,000	481,000	11.4	8.75
Ionone & Methyl Ionone	600	675	Zero	73,900	300	337	Zero	73,900	300	337	Zero	73,900	300	337
Methyl Salicylate	10,000	20,800	655,000	102,000	13.5	2.81	908,000	109,000	14.3	2.98	704,000	139,000	18.3	3.81
Misc. Batch Chemicals	1,000,000	9,450,000	6,180,000	1,910,000	0.56	5.31	7,380,000	2,150,000	0.63	5.97	12,900,000	3,700,000	1.08	10.2
Citronellol & Geraniol	1,400	1,700	86,100	15,800	25.5	30.9	90,700	16,800	27.0	32.7	134,000	27,900	44.8	54.3
Plasticizers	50,000	3,900	143,000	26,100	18.3	1.43	151,000	27,500	19.4	1.52	223,000	46,100	32.4	2.54
Dyes & Dye Intermediates	10,000	1,138,000	1,260,000	431,000	1.04	118	1,620,000	395,000	1.19	135	2,780,000	1,260,000	1.91	217
Toner Pigments	10,000	375,000	1,960,000	548,000	4.00	150	2,160,000	583,000	4.26	160	3,220,000	911,000	6.66	250
Lake Pigments	10,000	1,200,000	4,890,000	1,260,000	2.88	345	5,280,000	1,330,000	3.04	364	8,090,000	2,180,000	4.98	597
Citric Acid	100,000	5,720,000	5,480,000	1,570,000	0.75	43.0	5,650,000	1,740,000	0.83	47.6	9,840,000	2,970,000	1.42	81.2
Naphthenic Acid	22,000	99,700	1,480,000	414,000	11.4	51.6	1,570,000	429,000	11.8	53.4	2,080,000	578,000	15.9	72.0
Monosodium Glutamate	33,000	246,200	1,090,000	291,000	3.24	24.2	1,240,000	317,000	3.52	26.3	1,640,000	420,000	4.67	34.9
Tannic Acid	55,000	661,000	1,240,000	320,000	13.3	15.9	1,310,000	332,000	16.2	19.4	1,710,000	442,000	20.8	24.9
Vanillin	10,000	160,730	5,000,000	1,310,000	22.2	359	5,110,000	1,330,000	22.5	364	10,600,000	3,330,000	56.6	911

Energy

The BPCTCA treatment models were designed assuming sludge dewatering using vacuum filtration with sludge cake disposal to a sanitary landfill. An alternative sludge disposal method is incineration, which oxidizes the sludge organics and evaporates the water in the sludge. The remaining inorganic ash is 10 percent of the original volume. The offsetting factor is the substantial amount of energy required to realize this volume reduction.

Since the previous cost tables are computed using August 1971 dollars, the recent energy crisis has not impacted on these figures. The future availability and pricing of energy will play an ever increasing role in the selection of waste water treatment processes and sludge handling alternatives.

Nonwater Quality Aspects

The major nonwater quality consideration which may be associated with in-process control measures is the use of alternative means of ultimate disposal. As the process RWL is reduced in volume, alternate disposal techniques (such as incineration, ocean discharge, and deep-well injection) may become feasible. Recent regulations are tending to limit the applicability of ocean discharge and deep-well injection because of the potential long-term detrimental effects associated with these disposal procedures. Incineration is a viable alternative for concentrated waste streams, particularly those associated with Subcategory C. Associated air pollution and the need for auxiliary fuel, depending on the heating value of the waste, are considerations which must be evaluated on an individual basis for each use.

Other nonwater quality aspects, such as noise levels, will not be perceptibly affected. Most chemical plants generate fairly high noise levels -- 85-95 dB(a) -- within the battery limits because of equipment such as pumps, compressors, steam jets, flare stacks, etc. Equipment associated with in-process or end-of-pipe control systems would not add significantly to these levels.

SECTION IX

BEST PRACTICABLE CONTROL TECHNOLOGY CURRENTLY AVAILABLE (BPCTCA)

The application of best practicable control technology currently available (BPCTCA) for the secondary organic products segment of the organic chemicals manufacturing point source category should include the utilization of both in-process controls as well as end-of-process treatment technologies. The goal of these controls and technologies is the reduction and eventual elimination of pollutants from all discharges. These pollutants are responsible for most of the degradation this industry presently inflicts upon the aquatic environment. The following discussions describe the pollution control technologies commensurate with BPCTCA and the procedure used to establish effluent limitations guidelines.

The nature of the specific manufacturing process will determine the combination of process controls and modifications which are best suited for at-source water pollution control. However, some practices are generally applicable to all process plants within this point source category.

The first of these is the implementation of process observation and sampling programs to determine the identity, location, quantity, and composition of all aqueous streams within the plant. Monitoring should include all aqueous process streams as well as storage tank drainage, flare and pump seal waters, storm runoff, and waste water associated with support activities such as laboratories, materials receiving and shipment, and intake waters treatment. Although not considered as major sources of pollutants, utility waters and steam condensate from noncontact cooling and heating should also be included in any such survey. The flows and loadings developed should be allocated to the different processes in the plant in terms of production-based ratios. This provides a clear understanding as to which specific products require high water utilization or generate large amounts of water-borne pollutants. At the present time, this information has been developed by only a very few manufacturers within this industry.

Waste characterization studies of this type logically lead to the selection of various streams for segregation or the application of at-source controls. Exemplary chemical process plants segregate all waste waters which become

contaminated with organic chemical pollutants. These waste waters include contact wastes which flow continuously from within the process battery limits as well as intermittent waste waters which have contacted chemicals in other sections of the plant. The segregation and collection of these contaminated wastes from noncontaminated streams such as noncontact cooling waters appreciably reduce the volume of waste water to be treated in a centralized waste water treatment plant.

In most chemical manufacturing processes, the volume of non-contact cooling water required is between 3 and 100 times greater than the water which contacts chemicals within the process. The exact ratio depends upon whether the plant uses once-through cooling water or a recirculating system with cooling towers. However, the quantity of pollutants present in these waters generally is less than one percent of that present in contact waters. The major pollutants associated with noncontact waters are inorganic anions and cations existing as dissolved solids and chemicals to control slimes, algae, and corrosion. These materials do not normally affect dissolved oxygen levels in receiving waters.

In exemplary plants where contact waters are collected separately from noncontact waters, it is possible to design and operate a treatment system which has been sized to treat the optimum hydraulic and organic pollutant loadings from the manufacturing operations. Fluctuations in influent concentration can be reduced by equalization of the wastes. This practice also serves to smooth out shock loads resulting from process upsets. Such shock loads can result in conditions which could cause the treatment system to perform at less than design efficiency due to hydraulic or organic overlaods or to toxic or inhibitory conditions.

One of the most common at-source controls utilized by organic chemical plants is the separation and selective burning of hydrocarbon by-products. These materials are invariably formed because very few chemical reactions are 100 percent selective in the formation of the desired product. In almost every plant surveyed for the production of secondary organic products, some waste organic chemicals are disposed of by burning or hauling to landfill disposal. Although they may not be significant on a flow volume basis, these materials, if flammable, should not be discharged to the sewer and if not flammable would increase the quantities of hydrocarbons present in waste waters by an order of magnitude if they were combined with aqueous process wastes.

The devices used for burning may range from simple flares (for materials with high vapor pressures) to complex liquid waste incinerators or pyrolysis furnaces with extensive air pollution control equipment. In many cases, waste organic by-products are suitable as auxiliary boiler fuel. Although the continuation of this practice should be evaluated to insure that adequate air pollution control devices are utilized, it represents a significant contribution to the reduction of hydrocarbons present in the waste waters from most plants surveyed. For this reason, it is considered as one of the generally applicable in-process control practices that should be considered for BPCTCA.

A second practice involves the separation of insoluble organic chemicals from process waste waters. In many cases, this can be accomplished by simple gravity separation or the use of flotation systems. The fatty acid product/process grouping uses this technique to advantage. Insoluble hydrocarbon skimmings are collected and treated by filtration and sulfuric acid addition to increase product yields.

Process modifications consistent with BPCTCA include the regeneration and reuse of aqueous working fluids in the process. This is normally done by vacuum evaporation. Typical examples include the regeneration of sulfuric acid in processes to produce isobutylene and secondary butyl alcohol.

Other modifications include the direct recycle of a working aqueous fluid such as the absorbent in a gas scrubber or water used in barometric condensers. These techniques are utilized in the processes to manufacture benzoic acid and hexamethylenetetramine. In these cases, the volume of contact water discharged is reduced from a once-through operation to the blowdown from a recirculating system. Because of the diverse nature of even the limited number of processes examined in this study, it is not possible to generalize beyond practices such as sewer segregation and nonaqueous disposal of specific organic chemical waste water components. For this reason, BPCTCA effluent limitations guidelines were calculated based upon an end-of-process treatment model. However, it is expected that the industry will incorporate in-process controls whenever possible to reduce waste water discharges.

End-of-process treatment technologies commensurate with BPCTCA are based on the utilization of biological systems such as the activated sludge process, extended aeration, aerated lagoons, trickling filters, and anaerobic and

facultative lagoons. These systems may include additional treatment operations such as equalization, neutralization, primary clarification with separation of insoluble material, and nutrient addition. Final removal of suspended solids is accomplished by clarification.

Although the activated sludge process is considered as the treatment system most generally applicable to the wide variety of wastes generated by this industry, it must be recognized that many specific processes generate wastes which, if directly treated, would be toxic or inhibitory to a biological system accepting only those wastes. However, most of these wastes become noninhibitory if the influent concentrations are reduced from the extremely high values existing in the raw waste. This has been demonstrated in biological systems treating chlorinated hydrocarbons from the manufacture of ethylene dichloride and vinyl chloride and in systems which treat the combined wastes from a batch chemical plant where the treatability of individual batch wastes may vary widely.

BPCTCA does not preclude the use of carbon adsorption or other types of physical/chemical treatment to achieve BPCTCA effluent limitations guidelines if such treatment is more appropriate or cost effective.

At the present time, most manufacturers have elected to dispose of toxic, inhibitory, or difficult wastes by means other than waste water treatment systems, such as by deep-well injection or ocean dumping. The geographic location of many plants manufacturing these materials has made this a rather common practice. If deep-well injection or ocean dumping were considered as viable alternatives consistent with BPCTCA, some of the process plants surveyed would not discharge any process wastes to receiving waters. However, because of the potential danger of underground leakage or contamination inherent in the practice of deep-well disposal, effluent limitations guidelines have been developed as if these wastes were to be treated for discharge to surface waters.

The effluent limitations guidelines for BPCTCA were developed using a step-wise approach starting with the process raw waste load (RWL). The process RWL is the production-based ratio relating pollutants to specific products manufactured by specific processes. During the field sampling program, the process RWL was developed for different manufacturing operations by sampling contact process waste waters. The RWL is the necessary link between the wide diversity of products and manufacturing operations

existing in this industry and the production-based effluent limitations guidelines.

A single set of RWL values was first established for each of the secondary product-product groups covered in Phase II of this study. It was necessary to develop single numerical values for flow as well as values for each of the three waste load parameters despite the fact that field sampling data indicated that significant variation exists between sampling periods for a single process and between different manufacturers operating nominally the same process.

The single set of values assigned to each process was designated as the RWL which can be obtained through the application of in-process pollution control practices which are commensurate with BPCTCA. These practices were discussed previously in this section. The actual RWL values were indicated with each of the separate process descriptions presented in Section IV.

It should be noted that the lowest observed values were not arbitrarily chosen as RWL for BPCTCA. Factors such as process plant age, size, geographic location, and method of discharge (to surface waters or to a municipal treatment plant) were considered when drastically differing RWL were obtained for the same process.

There were many cases where only a single value from one sampling period could be developed for the process, or where the RWL varied drastically between sampling periods or between manufacturers for no apparent reason. In such cases it was necessary to use either the single value or the arithmetic mean as the RWL assigned to the process.

In some of the batch or semi-batch manufacturing operations associated with the batch and semi-continous processes subcategory, it was not possible to develop individual RWL's for each of the hundreds of specific batch processes in operation. However, commodities such as dyes and dye intermediates, fatty acids, primary derivatives of fatty acids, plasticizers, and pigments were considered as subgroups of materials whose manufacturing operations can be considered as a segment of the industry for which effluent limitations and standards can be applied.

The RWL values assigned to each of the 55 secondary organic product-product groupings were then placed in the major process subcategories described in Section IV (Industry Categorization). Consideration of differences in the feedstocks, unit operations, and chemical conversions is

implicit in this method of subcategorization as discussed in Section IV.

Tables 5-1 through 5-4, show the raw waste loads for each of the 55 product/process segments investigated in this study. Only 29 product/process segments were selected for the application of effluent limitations and guidelines. The raw waste loads and applicable reduction factors or concentrations are presented in Table 9-1 for the 29 product/processes.

Although the effluent limitations guidelines for BPCTCA may be obtained by whatever combination of in-process and end-of-process means is best suited to the individual manufacturers, the numerical values for the guidelines were calculated through the application of waste reduction factors based upon the use of a biological treatment system. The waste reduction factors used for calculating the BPCTCA effluent limitations guidelines for the BOD and COD parameters are listed as follows:

BOD	range 83 - 99 percent reduction (93 percent average)
COD	74 percent reduction

These factors are based upon the performance of biological treatment systems described in Section VII - Control and Treatment Technologies. The performance data used to develop these factors, in many cases, were obtained over a full year's operation and are indicative of treatment systems which accept a wide variety of wastes. For this reason, these same reduction factors were applied to the BPCTCA mean RWL for each subcategory in the following manner:

(1) The reduction factor of 93 percent was applied to the subcategory mean raw waste load whenever the effluent concentration for the subcategory mean flow, gallons per 1000 lb product is between 20 and 30 mg/l.

(2) Whenever the resultant concentration is below 20 mg/l after applying the 93 percent reduction factor, a less stringent effluent reduction was determined based on the concentration limiting basis of 20 mg/l.

(3) Whenever the resultant effluent concentration is above 30 mg/l with 93 percent reduction a higher

reduction is required based on 30 mg/l effluent up to a maximum reduction of 99 percent.

It is noted that BOD should be used as the controlling parameter for BPCTCA effluent limitation guidelines. The values specified for COD should only be used where it can be demonstrated through the use of biological treatability studies that the waste (even after dilution with other wastes from the plant) can not be effectively reduced in a biological system. In such cases it is anticipated that some combination of in-process controls, coupled with end-of-process systems such as activated carbon adsorption applied to any of the 29 product-product groupings, can provide the required 74 percent reduction of COD. In addition, the 74 percent represents an overall efficiency and therefore can be related to the end-of-process treatment facilities in which some product/process having greater or less than this volume will be treated. It should also be noted that compliance with both the BOD and COD effluent limitations is not required. Reduction of the BOD to levels developed through the application of the 93 percent reductions is considered generally for BPCTCA end-of-process reduction of the principal pollutant, BOD_5. Due to the extremely high waste load observed in some of the subcategory groups, and the need for in-process controls to assure that these wastes are treatable, reduction factors higher than 93 percent were recommended for specific cases.

The remaining two general pollutant parameters for which BPCTCA effluent limitations guidelines are specified are total suspended solids (TSS) and pH. The basis for these limitations guidelines are as follows:

TSS	60 mg/l	(30 day maximum average)
	135 mg/l	(maximum daily limitation)
pH	6-9	

The long term TSS concentration from which the above limitations were derived is 30 mg/l. Variability factors of 2.1 and 3.9 were then applied to the long term concentration of 30 mg/l in order to obtain the 30 day maximum average and the daily maximum limitations.

BPCTCA effluent values for the BOD and COD parameters were obtained in the manner indicated previously. These values shown as the BPCTCA effluent should not be directly applied as effluent limitations guidelines. They must be first multiplied by adjustment factors based on treatment plant performance developed in Section XIII. The last two columns

in Table 9-1 indicate the actual effluent limitations guidelines for BPCTCA which have been adjusted for:

1. The maximum average of daily values for any period of 30 consecutive days = 2.1 x long term average.

2. The maximum value for any one day = 3.9 x long term average.

The total effluent limitation for a multi-process plant would be the summation of these values relating to individual processes. Limitations for TSS and pH relate to the entire facility and should be applied in the manner shown in Table 9-1.

Finally, effluent limitations for specific pollutant parameters which are applicable to specific product/process segments were determined to be applicable to BPCTCA. Cyanide limitations are also established for HMDA, acrylonitrile and adiponitrile product/processes based upon the achievement of effluent concentrations below 0.5 mg/l and 1.0 mg/l for the average of 30 consecutive days and the daily maximum respectively. Heavy metals limitations for the plasticizers segment (Cu) were based upon the achievability of less than 1 mg/l concentration (daily maximum basis and 0.5 mg/l/30 day maximum average).

TABLE 9-1

DEVELOPMENT OF BPCTCA EFFLUENT LIMITATIONS
SIGNIFICANT ORGANIC PRODUCTS SEGMENT OF THE ORGANIC CHEMICALS
MANUFACTURING POINT SOURCE CATEGORY

SUBCATEGORY	RAW WASTE LOAD FLOW L/kkg	RAW WASTE LOAD FLOW gal/1000 lb	RAW WASTE LOAD BOD5 lb/1000 lb or kg/kkg(mg/l)	RAW WASTE LOAD COD lb/1000 lb or kg/kkg(mg/l)	BASIS for BPCTCA LIMITS	BOD5 LIMIT(1)	TSS LIMIT(1) @ 30 mg/l
Nonaqueous Process - Subcategory A							
BTX Aromatics	46.7	5.6	0.015(32)	0.053(113)	93% (23 mg/l)	0.0010	0.0014
Cumene	Negligible		Negligible		N/A	Negligible	Negligible
p-xylene	44.3	5.3	0.01 (238)	0.025(580)	20 mg/l (91%)	0.00090	0.0013
Process With Process Water Contact Only as Steam Diluent, Quench or Vent Gas Absorbent - Subcategory B							
Chloromethanes	2800	335	0.22 (77)	0.94 (335)	20 mg/l (74%)	0.056	0.084
Diphenylamine	526	63	0.087(164)	0.31 (600)	20 mg/l (88%)	0.010	0.016
Phthalic Anhydride (oxidation of o-xylene)	593	71	0.13(215)	0.64(1,080)	20 mg/l (91%)	0.012	0.018
Hexamethylenediamine(2) (adiponitrile process)	1,010	121	3.97(3,930)	21(20,900)	99% (39 mg/l)	0.040	0.030
Hexamethylenediamine(2) (hexanediol process)	1,100	132	4.0(3.630)	11.7(10,600)	99% (36 mg/l)	0.040	0.033
Methyl ethyl ketone	1,310	157	3.9(3,000)	2.1(1,630)	30 mg/l (99%)	0.039	0.039
Adiponitrile(2)	9,770	1,170	19.2(1,970)	135(13,800)	30 mg/l (98.5%)	0.29	0.29
Benzoic Acid &Benzaldehyde	2,840	340	25.6(9,010)	51(17,900)	99% (90 mg/l)	0.26	0.085
Maleic Anhydride	2,300	274	108(47,000)	287(126,000)	99% (470 mg/l)	1.1	0.069
Aqueous Liquid Phase Reaction Systems - Subcategory C							
Ethyl Acetate	1,290	155	0.049(38)	0.1(79)	20 mg/l (47%)	0.026	0.039
Isopropanol	2,540	304	0.99 (393)	2.99 (1,127)	93% (27 mg/l)	0.069	0.076
Calcium Stearate	54,100	6,460	13.8(255)	32.8(605)	20 mg/l (92%)	1.1	1.6
Hydrazine	30,300	3,630	9.09 (300)	115 (3800)	21 mg/l (93%)	0.64	0.91
Isobutylene	20,400	2,440	13.6(670)	64.1(3,150)	30 mg/l (96%)	0.61	0.61
Sec Butyl Alcohol	626	75	14.2(22,800)	38.8(62,000)	99% (228 mg/l)	0.14	0.019
Acrylonitrile(2)	4,470	536	38.7(8,620)	133 (32,800)	99% (87 mg/l)	0.39	0.13
p aminophenol	12,600	1,510	41.6(3,300)	73.7(5,850)	99% (33 mg/l)	0.42	0.38
Batch and Semi-Continuous Process - Subcategory D							
o-nitroaniline	269,000	32,200	16 (61)	105(390)	20 mg/l (67%)	5.4	8.1
p-nitroaniline	39,100	4,680	2.55(65)	79.1(2,030)	20 mg/l (69%)	0.78	1.2
Ionone and Methylionone	9,370	1,120	24 (2,600)	94 (10,000)	30 mg/l (99%)	0.28	0.28
Methyl Salicylate	1,735	208	22 (12,680)	93.9(54,100)	99% (126 mg/l)	0.22	0.052
Citronellol and Geraniol	10,000	1,199	58 (5,810)	111 (11,000)	99% (58 mg/l)	0.58	0.30
Plasticizers (3)	650	78	54 (82,600)	83 (127,000)	99% (826 mg/l)	0.54	0.020
Tannic Acid	10,000	1,200	153 (15,300)	1,070(107,000)	99% (153 mg/l)	1.5	0.30

(1) Variability factors applicable for the daily maximum and 30 day maximum average are 3.9 x and 2.1 x (mean limit) respectively.
(2) Limitations for cyanide established on the basis of 1.0 mg/l and 0.5 mg/l for the daily maximum and 30 day maximum average limitation.
(3) Limitation for total copper established on the basis of 1.0 mg/l and 0.5 mg/l for the daily maximum and 30 day maximum average limitation.

SECTION X

BEST AVAILABLE TECHNOLOGY ECONOMICALLY ACHIEVABLE (BATEA)

Best available technology economically achievable (BATEA) for the Secondary Products segment of the organic chemicals point source category is based upon the most exemplary combination of in-process and end-of-process treatment and control technologies.

In-process practices include those mentioned previously for BPCTCA as well as the following:

1. The reuse of aqueous waste streams from one process in another so that the discharge is eliminated.

2. The recycle of waste streams from one unit operation within a process to another with the subsequent recovery of a product or co-product.

3. The concentration and disposal of waste waters by means which eliminate the discharge entirely.

Process modifications for BATEA go beyond those described for BPCTCA in that they would require changes to major unit operations or chemical conversions within the process. For example, recycle of aqueous waste streams for product recovery might involve replacement of existing distillation columns or reactors.

Other examples of practices consistent with BATEA include: the reuse of aqueous hydrochloric acid streams in the manufacture of different chlorinated methanes; the recycle of aqueous waste streams for product recovery in the manufacture of hexamethylene diamine, maleic anhydride, and methyl ethyl ketone; and the use of evaporators or incinerators to completely eliminate discharges in the manufacture of phthalic anhydride and p-aminophenol.

The wide diversity of the organic chemicals industry prevents prescribing a concise list of process modifications which are applicable to the industry as a whole (or even to the small fraction of its products covered in both phases of this study). This problem is aggravated by the fact that the industry as a whole zealously guards information relating to the nature of specific manufacturing processes. This secrecy may or may not be warranted in order to maintain a competitive positions. However, it is difficult to develop effluent limitations guidelines based solely upon

the application of in-process technologies. Therefore, although the use of in-process techniques may represent a viable alternative for specific manufacturers, general effluent limitations guidelines for BATEA have been developed based upon the application of additional end-of-process treatment technologies.

Treatment commensurate with BATEA requires the application of activated carbon adsorption or the use of additional biological systems in series with the treatment previously described for BPCTCA. The specific choice of which system should be utilized depends upon the specific process or group of processes in operation at any given facility.

The performance of these treatment systems has been discussed in Section VII - Control and Treatment Technologies. The incremental waste reductions associated with these technologies is indicated as follows for the BOD and COD parameters:

BOD 89 percent reduction (BATEA effluent is 11 percent of BPCTCA effluent).

COD 69 percent reduction (BATEA effluent is 31 percent of BPCTCA effluent).

Effluent limitations guidelines for BATEA were calculated by applying these reduction factors to average effluent for BPCTCA shown in Table 9-1.

There are specific subcategories where the direct use of these reduction factors will still result in effluent concentrations which are below the capabilities of the control systems considered as BATEA. In this case, effluent limitations for BATEA were obtained by applying minimum concentration of 10 mg/l BOD_5 and 50 mg/l COD from the mean waste water flow from each subcategory group.

Cyanide limits for HMDA, adiponitrile and acrylonitrile products are based on achievable concentration of 0.5 mg/l and 0.25 mg/l for the daily maximum and 30 day maximum average limitations respectively. Copper (Cu) limitations for plasticizers are also based on achievable concentrations of 0.5 mg/l and 0.25 mg/l respectively.

It is also noted that the BATEA requires suspended solids removal to an average concentration of 15 mg/l through the use of filtration or other treatment technique which is equally effective.

The effluent limitation guidelines for BATEA are presented in Table 10-1. The BOD, COD and TSS values specified as the average effluent for BATEA should not be directly applied before adjustment for variations in treatment plant performance. The factors used here are the same as for BPCTCA and are discussed in Section XIII - Variation in Treatment Plant Performance.

TABLE 10 - 1

DEVELOPMENT OF BATEA EFFLUENT LIMITATION FOR THE SIGNIFICANT ORGANIC PRODUCTS SEGMENT OF THE ORGANIC CHEMICALS MANUFACTURING POINT SOURCE CATEGORY

	BPCTCA EFFLUENT LIMITATION			BOD5 BATEA (1) EFFLUENT LIMITATION		COD BATEA (2) EFFLUENT LIMITATION		TSS (1) LIMIT @ 15 mg/l
	FLOW L/kkg	BOD5 lb/1000 lb or kg/kkg (mg/l)	COD lb/1000 lb or kg/kkg (mg/l)	BASIS mg/l or %	LIMITATION lb/1000 lb or kg/kkg(mg/l)	BASIS mg/l or %	LIMITATION lb/1000 lb or kg/kkg	lb/1000 lb or kg/kkg
Nonaqueous Process - Subcategory A								
BTX Aromatics	46.7	0.0010(23)	0.04	10 mg/l (57%)	0.00047	69%	0.0042	0.00070
Cumene	No Discharge	No Discharge	No Discharge	No Discharge		No discharge		No Discharge
p-xylene	44.3	0.00090(20)	0.0065	10 mg/l (50%)	0.00045	69%	0.0022	0.00066
Process With Process Water Contact Only as Steam Diluent, Quench or Vent Gas Absorbent - Subcategory B								
Chloromethanes	2800	0.056(20)	0.24	10 mg/l (50%)	0.028	50 mg/l	0.14	0.042
Diphenylamine	526	0.010(20)	0.081	10 mg/l (50%)	0.053	50 mg/l	0.26	0.0080
Phthalic Anhydride (oxidation of o-xylene)	593	0.012(20)	0.17	10 mg/l (50%)	0.0060	69%	0.050	0.0090
Hexamethylenediamine (adiponitrile process)(3)	1,010	0.040(39)	5.5	10 mg/l (74%)	0.010	69%	1.7	0.015
Hexamethylenediamine (hexanediol process)(3)	1,100	0.040(36)	3.0	10 mg/l (72%)	0.011	69%	0.94	0.016
Methyl ethyl ketone	1,310	0.039(30)	0.55	10 mg/l (67%)	0.013	69%	0.17	0.020
Adiponitrile(3)	9,770	0.29(30)	35	10 mg/l (67%)	0.10	69%	11	0.14
Benzoic Acid & Benzaldehyde	2,840	0.26(90)	13	10 mg/l (89%)	0.028	69%	4.1	0.042
Maleic Anhydride	2,300	1.1(470)	75	89% (50 mg/l)	0.12	69%	23	0.035
Aqueous Liquid Phase Reaction Systems - Subcategory C								
Ethyl Acetate	1,290	0.026 (20)	0.065	10 mg/l (50%)	0.013	50 mg/l	0.065	0.020
Isopropanol	2,540	0.069(27)	0.78	10 mg/l (63%)	0.025	69%	0.24	0.038
Calcium Stearate	54,100	1.1(20)	8.5	10 mg/l (50%)	0.54	50 mg/l	2.7	0.81
Hydrazine	30,300	0.64 (21)	30	10 mg/l (50%)	0.3	69%	9.2	0.45
Isobutylene	20,400	0.61(30)	17	10 mg/l (67%)	0.20	69%	5.1	0.30
Sec Butyl Alcohol	626	0.14(228)	10	89% (25 mg/l)	0.016	69%	3.1	0.0095
Acrylonitrile(3)	4,470	0.39(87)	35	10 mg/l (89%)	0.045	69%	11	0.067
p aminophenol	12,600	0.42(33)	19	10 mg/l (70%)	0.13	69%	5.9	0.19
Batch and Semi-Continuous Process - Subcategory D								
o-nitroaniline	269,000	5.4(20)	27	10 mg/l (50%)	2.7	50 mg/l	13	4.0
p-nitroaniline	39,100	0.78(20)	20	10 mg/l (50%)	0.39	69%	6.3	0.59
Ionone and Methylionone	9,370	0.28(30)	25	10 mg/l (67%)	0.094	69%	7.8	0.14
Methyl Salicylate	1,735	0.22(126)	24	89% (14 mg/l)	0.024	69%	7.5	0.026
Citronellol and Geraniol	10,000	0.58(58)	29	10 mg/l (83%)	0.10	69%	8.9	0.15
Plasticizers (4)	650	0.54(826)	22	89% (91 mg/l)	0.059	69%	6.6	0.0095
Tannic Acid	10,000	1.5(153)	278	89% (17 mg/l)	0.17	69%	86	0.15

(1) Effluent limits for daily maximum and 30 day maximum average are based on variability factors 3.9 x and 2.1 x (mean limit).
(2) COD values are not limitations on BPCTCA but are utilized as 74% reduction basis for BATEA limitations.
(3) Limitation for cyanide established on the basis of 0.5 mg/l and 0.25 mg/l for the daily maximum and 30 day maximum average.
(4) Limitation for copper established on the basis of 0.5 mg/l and 0.25 mg/l for the daily maximum and 30 day maximum average.

SECTION XI

NEW SOURCE PERFORMANCE STANDARDS

Determination of the best available demonstrated control technology (BADCT) for new sources of the 29 product/process segments involves the evaluation of the most exemplary in-process control measures with exemplary end-of-process treatment. Some major in-process controls which were fully described in Section VII are applicable to new sources as follows:

(1) The substitution of noncontact heat exchanger using air, water or refrigerants for direct contact water cooling equipment (barometric condensers);

(2) The use of nonaqueous quench media, e.g., such as furnace oil, as a substitute for water, where direct contact quench is required;

(3) The recycle of process water, such as between absorber and stripper;

(4) The reuse of process water (after treatment) as make-up to evaporative cooling towers through which noncontact cooling water is circulated;

(5) The reuse of process water to produce low pressure steam by noncontact heat exchangers in reflex condensers or distillation columns;

(6) Recycle cooling for contact water systems (barometric condensers);

(7) The recovery of spent acid or caustic solutions for reuse;

(8) The recovery and reuse of spent catalyst solutions;

(9) The use of nonaqueous solvents for extraction of products with subsequent recovery of solvent; and

(10) Addition of demisters.

Although these control measures are generally applicable, no attempt was made to identify all of these or any single one as universally applicable. There are other equally appropriate control measures which should be carefully explored and utilized by new plants in this industry.

The end-of-process treatment model has been determined to be biological treatment with the additional suspended solids removal by clarification, sedimentation, sand and/or dual media filtration.

Although biological treatment has been described as the basis for the BADCT, it is recognized that chemical-physical systems such as activated carbon may also be employed as an end-of-process technology or as an in-process or by-product recovery system. It may also be necessary to remove certain wastes which are toxic to or interfere with biological waste treatment systems by in-process chemical-physical control processes.

The BOD_5 reductions that were used to develop the BADCT limitations are discussed in Section VII, Control and Treatment Technology. These reductions were applied to the effluent obtained from BPCTCA and are listed as follows:

> BOD_5 17% reduction (BADCT effluent is 83% of BPCTCA effluent).
>
> COD 20% reduction (BADCT effluent is 80% of BPCTCA effluent).

As with BPCTCA, the major oxygen demand pollutant parameter is BOD_5 for which effluent limitations guidelines are established. TSS limitations are based upon an achievable concentration of 15 mg/liter. Cyanide limitations for HMDA, acrylonitrile and adiponitrile products, as well as copper limits for plasticizers, were based upon the same technologies and achievable limits as BPCTCA (Section IX).

The variability associated with the BADCT model treatment process was assumed to be nearly the same as that for BPCTCA since both systems are identical except for filtration which is added to the biological system for BADCT.

Standards of performance for new sources are presented in Table 11-1.

TABLE 11 - 1

DEVELOPMENT OF STANDARDS OF PERFORMANCE FOR THE SIGNIFICANT ORGANIC PRODUCTS SEGMENT OF THE ORGANIC CHEMICALS MANUFACTURING POINT SOURCE CATEGORY

SUBCATEGORY	BPCTCA EFFLUENT		NSPS EFFLUENT (1)	
	FLOW	BOD5	BOD5 LIMITATION	TSS LIMITATION (at 15 mg/l)
	L/kkg	lb/1000 lb or kg/kkg (mg/l)	kg/kkg or lb/1000 lb	kg/kkg or lb/1000 lb
Nonaqueous Process - Subcategory A				
BTX Aromatics	46.7	0.0010(23)	0.00083	0.00070
Cumene	No Discharge	No Discharge	No Discharge	No Discharge
p-xylene	44.3	0.00090(20)	0.00075	0.00066
Process With Process Water Contact Only as Steam Diluent, Quench or Vent Gas Absorbent - Subcategory B				
Chloromethanes	2,800	0.056(20)	0.046	0.042
Diphenylamine	526	0.010(20)	0.0083	0.0080
Phthalic Anhydride (oxidation of o-xylene)	593	0.012 (20)	0.010	0.0090
Hexamethylenediamine (adiponitrile process)(2)	1,010	0.040(39)	0.033	0.015
Hexamethylenediamine (hexanediol process)(2)	1,100	0.040(36)	0.033	0.016
Methyl ethyl ketone	1,310	0.039(30)	0.032	0.020
Adiponitrile (2)	9,770	0.29(30)	0.24	0.14
Benzoic Acid and Benzaldehyde	2,840	0.26(90)	0.22	0.042
Maleic Anhydride	2,300	1.1(470)	0.91	0.035
Aqueous Liquid Phase Reaction Systems - Subcategory C				
Ethyl Acetate	1,290	0.026(20)	0.022	0.020
Isopropanol	2,540	0.069(27)	0.057	0.038
Calcium Stearate	54,100	1.1(20)	0.91	0.81
Hydrazine	30,300	0.64 (21)	0.53	0.45
Isobutylene	20,400	0.61(30)	0.51	0.30
Sec Butyl Alcohol	626	0.14(228)	0.12	0.0095
Acrylonitrile(2)	4,470	0.39(87)	0.32	0.067
p-aminophenol	12,600	0.42(33)	0.35	0.19
Batch and Semi-Continuous Process - Subcategory D				
o-nitroaniline	269,000	5.4(20)	4.5	4.0
p-nitroaniline	39,100	0.78(20)	0.65	0.59
Ionone and Methylionone	9,370	0.28(30)	0.23	0.14
Methyl Salicylate	1,735	0.22(126)	0.18	0.026
Citronellol and Geraniol	10,000	0.58(58)	0.48	0.15
Plasticizers (3)	650	0.54(826)	0.45	0.0095
Tannic Acid	10,000	1.5(153)	1.2	0.15

(1) Effluent limitation for the daily maximum and 30 day maximum average are based on variability factors 3.9 x and 2.1x (mean limit).

(2) Limitation for cyanide established on the basis of 1.0 mg/l and 0.5 mg/l for the daily maximum and 30 day maximum average.
(3) Limitation for copper established on the basis of 1.0 mg/l and 0.5 mg/l for the daily maximum and 30 day maximum average.

SECTION XII

PRETREATMENT GUIDELINES

Pollutants from specific processes within the organic chemicals industry may interfere with, pass through inadequately treated, or otherwise be incompatible with a publicly owned treatment works. The following section examines the general waste water characteristics of the industry and the pretreatment unit operations which may be applicable.

A review of the waste water characteristics indicated that certain products can be grouped together on the basis of pollutants requiring pretreatment. Accordingly, the previously determined subcategories were divided into two Sub-Groups as follows:

Subgroup 1	Subgroup 2
Subcategory A	Subcategory C
Subcategory B	Subcategory D

The principal difference in the general characteristics of the process waste waters from the manufacture of chemicals in these two Subgroups is that the waste waters of Subgroup 1 are more likely to include significant amounts of free and emulsified oils (petroleum origin), whereas the waste waters of Subgroup 2 are more likely to include significant amounts of heavy metals. Detailed analyses for specific products in the industry are presented in Section IV.

The types and amounts of heavy metals in the waste water depend primarily on the manufacturing process and on the amounts and types of catalysts lost from the process. Most catalysts are expensive, and therefore are recovered for reuse. Only recoverable catalysts (heavy metals), generally in small concentrations, appear in the waste water. The products and processes in Subgroup 2 are most likely to have heavy metals in their waste water, and waste waters associated with dye/pigment production (Subcategory D) also may have high heavy metal concentrations due to the production of metallic dyes. Fatty acid waste waters (Subcategory D) contain free and emulsified oil (animal and vegetable origin) of significance.

The manufacture of acrylonitrile (Subcategory C) produces a highly toxic waste water which is difficult to treat biologically unless adequate provisions are made for

pretreatment of these waste waters for removal of the cyanide pollutant. The toxicity characteristics have been attributed to the presence of hydrogen cyanide in excessive quantities (200 mg/l). In addition, the waste water is generally acidic (pH 4 to 6) and contains high concentrations of organic carbon (TOC = 18,500 mg/l). These waste waters are generally segregated from other process wastes and are disposed of by other means (e.g. incineration); they are not generally discharged to municipal collection systems. For these reasons, the pretreatment unit operations developed in the following section do not include the process waste waters from the manufacture of acrylonitrile.

Table 12-1 shows the pretreatment unit operations which may be necessary to protect joint waste water treatment processes.

Oil separation may be required when the oil (petroleum origin) content of the waste water exceeds 100 mg/l. Animal and vegetable oils in the fatty acid waste waters should be segregated in order to minimize solids separation problems in the waste water treatment facility.

The heavy metals present in organic chemical wastes are in many cases so low in concentration that heavy metals removal is not required from the standpoint of treatability characteristics. However, the effluent limitations for toxic pollutants may require additional pretreatment (chemical precipitation) for removal of these materials.

The pretreatment unit operations generally consist of equalization, neutralization, and oil separation. In addition, phenol recovery (to reduce the phenol concentrations) and spill protection for spent acids and spent caustics may be required in some cases.

Biological Treatment Inhibition

The scope of this study did not allow for a specific toxicity evaluation of individual product waste waters. However, the completeness of the RWL analytical data did provide a waste water profile which could be used to evaluate possible biological inhibition. The list and concentrations of inhibitory pollutants in EPA's Federal Guidelines - Pretreatment of Discharge to Publicly Owned Treatment Works were examined, and specific comments are presented in Section VI. This previous list was amended in the Phase I report to include phenol and iron:

Parameter	Inhibition to Biological Treatment	Inhibition to Anaerobic Sludge Digestion
Phenol	50 mg/l	---
Iron	---	5 mg/l

Table 12-1

Pretreatment Unit Operations For the Organic Chemicals Industry

Pretreatment Sub-Group	Suspended Growth Biological System	Fixed Growth Biological System	Independent Physical - Chemical System
1	Oil Separation + Equalization + Neutralization + Spill Protection + Chemical Precipitation[1]	Oil Separation + Equalization + Neutralization + Spill Protection + Chemical Precipitation[1]	Oil Separation + Equalization + Neutralization + Chemical Precipitation[1]
2[2]	Equalization + Neutralization + Spill Protection + Chemical Precipitation[1]	Equalization + Neutralization	Equalization + Neutralization

[1]Need for chemical precipitation depends on extent of catalyst recovery.

[2]Oil separation may be required for the fatty acid industry.

SECTION XIII

ALLOWANCE FOR VARIABILITY IN TREATMENT PLANT PERFORMANCE

Variabilty in Biological Waste Treatment Systems

In the past, effluent requirements for wastewater treatment plants have been related to the achievement of a desired treatment efficiency based on long term performance. There are, however, factors that affect the performance and hence the effluent quality or treatment efficiency over the short term, such that short term performance requirements cannot be taken directly from the longer term data. Knowledge of these factors must be incorporated in the development of effluent limitations and in decisions of whether a treatment plant is in compliance with the limitations.

The effluent limitations promulgated by EPA and developed in this Document include values that limit both long term and short term waste discharges. These restrictions are necessary to assure that deterioration of the nation's waters does not occur on a short term basis due to heavy intermittent discharges, even though an annual average may be attained.

Most of the factors that bring about variations in treatment plant performance can be minimized through proper dosing and operation. Some of the controllable causes of variability and techniques that can be used to minimize their effect include:

A. Storm Runoff

Storm water holding or diversion facilities should be designed on the basis of rainfall history and area being drained. The collected storm runoff can be drawn off at a constant rate to the treatment system. The volume of this contaminated storm runoff should be minimized through segregation and the prevention of contamination. Storm runoff from outside the plant area, as well as uncontaminated runoff, should be diverted around the plant or contaminated area.

B. Flow Variations

Products-process upsets and raw waste variations can be reduced by properly sized equalization units. Equalization is a retention of the wastes in a suitably designed and operated holding system to average out the influent before allowing it into the treatment system.

C. Spills

Spills of certain materials in the plant can cause a heavy loading on the treatment system for a short period of time. A spill may not only cause higher effluent levels as it goes through the system, but may inhibit a biological treatment system and therefore have longer term effects. Equalization helps to lessen the effects of spills. However, long term reliable control can only be attained by an aggressive spill prevention and maintenance program including training of operating personnel. Industrial associations such as the Manufacturing Chemists Association have developed guidelines for prevention, control and reporting of spills. These note how to assess the potential of spill occurrence and how to prevent spills. Each industrial organic chemical plant should be aware of the MCA report and institute a program of spill prevention using the principles described in the report. If every plant were to use such guidelines as part of plant waste management control programs, its raw waste load and effluent variations would be decreased.

D. Start-up and Shut-down

These periods should be reduced to a minimum and their effect dampened through the use of equalization facilities and by proper scheduling of manufacturing cycles.

E. Climatic Effects

The design and choice of type of a treatment system should be based on the climate at the plant location so that this effect can be minimized. Where there are severe seasonal climatic conditions, the treatment system should be designed and sufficient operational flexibility should be available so that the system can function effectively.

F. Treatment Process Inhibition

Chemicals likely to inhibit the treatment processes should be identified and prudent measures taken to see that they do not enter the wastewater in concentrations that may result in treatment process inhibition. Such measures include the diking of a chemical use area to contain spills and contaminated wash water, using dry instead of wet clean-up of equipment, and changing to non-inhibiting chemicals.

The common indicator of the pollution characteristics of the discharge from a plant historically has been the long-term average of the effluent load. However, the long-term (yearly) average is not the only parameter on which to base an effluent limitation. Shorter term averages also are needed, both as an indication of performance and for enforcement purposes.

Wherever possible, the best approach to develop the annual and shorter term limitations is to use historical data from the industry or product-process line in question. If enough data is available, the shorter term limitations can be developed from a detailed analysis of the hourly, daily, weekly, or monthly data. Rarely, however, is there an adequate amount of short term data. However, using data which show the variability in the effluent load, statistical analyses can be used to compute short term limits (30 day average or daily) which should be attained, provided that the plant is designed and run in the proper way to achieve the desired long term average load. These analyses can be used to establish variability factors for effluent limitations or to check those factors that have been developed.

During the industry survey, EPA tried to use all historical performance data that were available. Unfortunately, data were available only for four plants, Amoco, Joliet, Illinois; Amoco, Decatur, Alabama; DuPont, Belle, West Virginia; and Union Carbide at Institute, West Virginia. The Agency used long term performance information from these facilities to establish the variability factors for the Phase I regulations. The counsel for industry petitioners in challenges to the Phase I regulations vigorously objected to the use of these data points, or said that if these data were to be used, much higher variability factors should be derived.

For the Significant Organic Products Segment of the Organic Chemicals Manufacturing Point Source Category EPA has used a data base consisting of 21 organic chemicals, plastics and petrochemical plant performance data, to establish daily maximum and monthly average variability factors. While these plants make different products, Agency analysis revealed that they can be grouped because the treatment plant characteristics and response to flow and constituent variables, for example, are similar. Plants examined include the Amoco, Decatur, Alabama, Yorktown, Va. and Joliet, Illinois plants; B.F. Goodrich, Fredricktown, N.J. facility; B.W. Marlion, Ottawa, Illinois; Borden Chemical, Illiopolis, Illinois; Celanese Fiber, Rock Hill, S.C.;

F.M.C. Corporation, Fredricksburg, Va.; Fiber Industries, Salisbury, N.C.; Champlin, Corpus Christi, Texas; Marathon, Texas City, Texas; Shell, Houston, Texas and Martinez, California; and several oil refineries about which data were supplied by the American Petroleum Institute.

The BOD5 variability from these plants has been calculated in the following way: it is known from the properties of normal distribution that 99 percent of all effluent observations will have a value less than $\mu + 2.3270$ and that $C\underline{99}/C\underline{50} = 10^{2.327 \times \sigma}$. The relationship between the average value, median value and standard deviation of the logarithm of a log normally distributed variable can be expressed: $A = 10^{\mu+(2.303\ \sigma^2) \div 2}$ and $C\underline{50} = 10^{\mu}$, therefore, $C\underline{50}/A = 10^{-(2.303\ \sigma^2) \div 2}$. Using these bases, the daily maximum variability factor ($C\underline{99}/A$) equals 2.10. These are the factors that have been used to generate effluent regulations for the product-processes covered by this Document.

The data base upon which EPA's variability factors are based is the most extensive available. Commenters on these and prior EPA Development Documents have suggested no other source of information on which to base BOD5, TSS or COD variability factor calculation. While it is known that the behavior of waste characteristics such as COD and TSS are not precisely the same as BOD5 in variations of effluent, and that use of different treatment techniques can alter expected variations, there are not data sources for COD which can be used to generate separate variability numbers. While there is slight information available on TSS variability, it is not enough upon which to rely solely, and appears to be consistent with the BOD5 variability factors. If anyone has more or better information available, the Agency will readily consider it. For these reasons, EPA has used factors of 2.1 and 3.9 for all pollutant parameters, for regulations covering existing plants and new sources.

SECTION XIV

ACKNOWLEDGMENTS

This report was prepared for the Environmental Protection Agency by the staff of Roy F. Weston Co. under the direction of Mr. James Dougherty, Project Director. The following individuals of the staff of Roy F. Weston Co. made significant contributions to this effort:

Mr. David Smallwood, Project Manager
Mr. Charles Mangan, Project Engineer
Mr. Kent Patterson, Project Engineer
Mr. James Weaver, Project Engineer
Dr. Sun-nan Hong, Project Engineer

Mr. John A. Nardella, Project Officer, Effluent Guidelines Division, contributed to the overall supervision of this study and preparation of the draft report.

Mr. Allen Cywin, Director, Effluent Guidelines Division, and Mr. Walter J. Hunt, Chief, Effluent Guidelines Development Branch, offered guidance and helpful suggestions. Members of the Working Group/Steering Committee who coordinated the internal EPA review are acknowledged:

Mr. Walter J. Hunt, Effluent Guidelines Division, Chairman
Mr. John A. Nardella, Effluent Guidelines Division, Project Officer
Mr. George Rey, Office of Research and Development
Dr. Thomas Short, Ada Laboratory, Office of Research and Development
Mr. David G. Davis, Office of Planning and Evaluation
Mr. James Rogers, Office of General Counsel
Mr. Wayne Smith, NFIC, Denver
Mr. John Lank, Region IV, Atlanta
Mr. Joseph Davis, Region III, Philadelphia
Mr. Ray George, Region III, Philadelphia
Mr. Albert Hayes, Office of Solid Waste Management
Mr. Frank Kover, Office of Toxic Substances

Special appreciation is given to Dr. Raymond Loehr, Effluent Guidelines Division Program Advisor, Dr. Robert Swank, EPA Athens, Georgia Laboratory, and Dr. W. Lamar Miller, Effluent Guidelines Division, for reviewing this document and suggesting technical and editorial improvements.

Acknowledgement and appreciation is also given to the secretarial staffs of both Effluent Guidelines Division and Roy F. Weston Co. for their efforts in the typing of drafts,

necessary revisions, and final preparation of the effluent guidelines document. Appreciation is especially given to the following:

Ms. Kay Starr, Effluent Guidelines Division
Ms. Brenda Holmone, Effluent Guidelines Division
Ms. Nancy Zrubek, Effluent Guidelines Division

Appreciation is also extended to both the Manufacturing Chemists' Association and the Synthetic Organic Chemical Manufacturers' Association for the valuable assistance and cooperation given to this program. Appreciation is also extended to those companies which participated in this study:

Accent International, Inc.
Allied Chemical Corporation
American Cyanamid Company
Armak Chemcial Company
BASF - Wyandotte Company
Benzeroid Organics, Inc.
Borg Warner Chemicals, Inc.
Celanese Chemical Company
Conoco Chemicals, Inc.
E.I. DuPont de Nemours, Inc.
Emery Industries, Inc.
Exxon Chemical Company, U.S.A.
General Mills, Inc.
Givaudan Corporation
Glyco Chemicals, Inc.
A. Gross & Company
Hercules, Inc.
Hooker Chemical Corporation
Jefferson Chemical Company
Kraftco Corporation
Mallinckrodt Chemical Company
Monsanto, Inc
Olin Corporation
Petro - Tex Chemical Corporation
Pfizer, Inc.
Pit - Consol Chemical Company
Roma Chemicals, Inc.
Rubicon Chemicals, Inc.
Shell Chemical Corporation
Sherwin - Williams Corporation
Stepan Chemical Company
Sun Oil Company
Tenneco Chemicals, Inc.
Union Carbide Corporation
Vulcan Materials Company
USS Chemicals, Inc.
Vistron Corporation

SECTION XV

BIBLIOGRAPHY

This bibliography supplements the main bibliography previously presented in the Phase I study.

Development Document for Proposed Effluent Limitations Guidelines and New Source Performance Standards for the Major Organic Products. U. S. Environmental Protection Agency; EPA 440/1-73/009; December, 1973.

Development Document for Effluent Limitations Guidelines and Standards of Performance - Organic Chemicals Industry - Draft. Prepared by Prepared by Roy F. Weston, Inc. for U. S. Environmental Protection Agency; Contract No. 68-01-1509; June, 1973.

Hager, Donald. "A Survey of Industrial Wastewater Treatment by Granular Activated Carbon." Presented at the 4th Joint Chemical Engineering Conference; Vancouver, British Columbia; September 10, 1973.

Kennedy, D. C., and others. "A New Adsorption/Ion Exchange Process for Treating Dye Waste Effluents." Rohm and Haas Company; Philadelphia, Pennsylvania.

Pattison, E. Scott, editor. Fatty Acids and Their Industrial Applications. New York: Marcel Dekker, Inc., 1968.

Bibliography From the Phase I Development Document

Albright, P.N., "The Present Status of Phenol Waste Treatment" Public Works, Vol. 98, No. 6 (June 1967), 124-127.

"Are You Drinking Biorefractories Too?" Environmental Science and Technology, Vol. 7 No.1 (January 1973), 14-15.

Bengly, M., "The Disposal of Liquid and Solid Effluents and Oil Refineries." Proceedings of 21st Industrial Waste Conference, Purdue University (May 1966), 759-767.

Beychok, M.R., "Wastewater Treatment." Hydrocarbon Processing, Vol. 50, No. 12 (December 1971), 109-112.

Black, G.M., and Schoonman, W., "Save Water: Air Condense Steam." Hydro-carbon Processing, Vol. 49, No. 10 (October 1970), 101-103.

Borkowski, B., "The Catalytic Oxidation of Phenols and Other Impurities in Evaporated Effluents." Water Research, Vol. 1 (Pergamon Press, 1967), 367-385.

Browning, J.E., ed., "Activated Carbon Bids for Wastewater Treatment Jobs." Chemical Engineering, Vol. 77, No.9 (September 1970), 32-34.

Carnes, A., Eller, J.M., and Martin, J.C., "Reuse of Refinery and Petrochemical Wastewaters." Industrial Water Engineering, Vol. 9, No. 3 (June/July 1972), 25-29.

[1]Donal Hager, "A Survey of Industrial Wastewater Treatment by Granular Activated Carbon" Presented at the 4th Joint Chemical Engineering Conference; Vancouver, British Columbia; Sept. 10, 1973.

Dorris, T.C., Patterson, D., and Copeland, B.J., "Oil Refinery Effluent Treatment in Ponds." Journal of the Water Pollution Control Federation, Vol. 35, No. 7 (July 1963), 932-939.

Easthagen, J.H., Skrylov, V., and Purvis, A.L., "Development of Refinery Wastewater Control at Pascagoula, Mississippi." Journal of Water Pollution Control Federation, Vol. 37, No. 12 (December 1965), 1671-1678.

Eisenhauer, H.R., "Increased Rate and Efficiency of Phenolic Waste Ozonization." Journal of Water Pollution Control Federation, Vol. 43, No. 2 (February 1971), 200-202.

Elkin, H.F., "Activated Sludge Process Applications to Refinery Effluent Waters." Sewage and Industrial Wastes, Vol. 28, No. 9 (September 1956), 1122-1129.

Emery, R.M., Welch, E.B., and Christman, R.F., "The Total Organic Carbon Analyzer and Its Application to Water Research." Journal of Water Pollution Control Federation, Vol. 43, No. 9 (September 1971), 1834-1844.

Ewing, R.C., "Modern Waste Treatment Plant," Oil and Gas Journal, Vol. 68, No. 9 (September 1970), 66-69. (June 1960), 377-379.

Figueroa, L.O., "Water Pollution Control at Phillips Puerto Rico Petrochemical Complex." Chemical Engineering, Vol. 67, No. 6 (June 1960), 377-379

Franzen, A.E., Shogan, V.G., and Grutsch, J.F., "Successful Tertiary Treatment at American." Oil and Gas Journal, Vol. 70, No. 4 (April 1972), 48-49.

Gilliam, A.S., and Anderegy, F.C., "Biological Disposal of Refinery Wastes." Proceedings of 14th Industrial Waste Conference, Purdue University (May 1959), 145-154.

Gloyna, E.F., Brady, S.O., and Lyles, H., "Use of Aerated Lagoons and Ponds in Refinery and Chemical Waste Treatment." Journal of Water Pollution Control Federation, Vol. 41, No. 3 (March 1969), 429-438.

Gloyna, E.F., Ford, D.L., and Eller, J., "Water Reuse in Industry." Journal of Water Pollution Control Federation, Vol. 42, No. 2 (February 1970), 237-242.

Gazzi, L., and Pasero, R., "Selection." Hydrocarbon Processing, Vol. 49, No. 10 (October 1970), 83-90.

Harris, A.J., "Water Pollution Control Activities of the Central Ontario Lakeshore Refineries." Journal of Water Pollution Control Federation, Vol. 35, No. 9 (September 1963), 1154-1165.

Hart, J.A., "Air Flotation Treatment and Reuse of Refinery Waste Water." Proceedings of 25th Industrial Waste Conference, Purdue University (May 1970), 1-14.

Hart, J.A., "On Improving Wastewater Quality." Industrial Water Engineering, Vol. 7, No. 8 (September/October 1970), 20-26.

Henshaw, T.B., "Adsorption/Filtration Plant Cuts Phenols from Effluent." Chemical Engineering, Vol. 78, No. 5 (May 1971), 47-55.

Hovious, J.C., Conway, R.A., and Garze, C.W., "Anaerobic Lagoon Pretreatment of Petrochemical Wastes." Journal of Water Pollution Control Federation, Vol. 45, No. 1 (January 1973), 71-84.

Jaeschke, L., and Trobisch, K., "Treat HPI Wastes Biologically." Hydrocarbon Processing, Vol. 46, No. 7 (July 1967), 11-115.

Kent, J.A., Industrial Chemistry, Reinhold Publishing Corp., New York (1962).

Kumke, G.W., Conway, R.A., and Creagh, J.P., "Compact Activated Sludge Treatment of Combined Petrochemical Municipal Waste." Water and Wastes Engineering, Vol. 9, No. 11 (November 1972), 342-351.

Lewis, W.L., "New Process To Remove Phenols from Wastewater." Journal of Water Pollution Control Federation, Vol. 40, No. 5 (May 1968), 869-872.

Lund, H.F., ed., Industrial Pollution Control Handbook; McGraw-Hill, Inc. New York (1971).

Mapstone, G.E., "Control Cooling Tower Blowdown." Hydrocarbon Processing, Vol. 46, No. 1 (January 1967), 155-160.

McKinney, R.E., "Biological Treatment Systems for Refinery Wastes." Journal of Water Pollution Control Federation, Vol. 36, No. 3 (March 1967), 346-359.

McPhee, W.T., and Smith, A.R., "From Refinery Wastes to Pure Water." Proceedings of 16th Industrial Waste Conference, Purdue University (May 1961), 311-326.

"Methods for Chemical Analysis of Water and Wastes." Environmental Protection Agency, National Environmental Research Center, Analytical Quality Control Laboratory, Cincinnati, Ohio (1971).

Morissey, A.J., and LaRocca, S.A., "Wastewater Load Evaluated at a MultiProduct Organic Chemical Plant." Industrial Water Engineering, Vol. 7, No. 5 (May 1970), 173-178.

Mytelka, A.I., and Manganelli, R., "Energy-Induced Changes in an Azo Dyesstuff Waste." Journal of Water Pollution Control Federation, Vol. 40, No. 2 (February 1968), 260-268.

1972-73 OPD Chemical Buyers Directory, Chemical Marketing Reporter. Schnell Publishing Co., Inc., New York (1973).

Parmelley, C.S., and Fox, R.D., "Reuse Comes our Ahead." Water and Wastes Engineering, Vol. 9, No. 11 (November 1972).

Paulson, E.G., "The War on Pollution." Oil and Gas Journal, Vol. 68, No. 6 (June 1970), 85-92.

Perry, J.H., Chemical Engineer's Handbook, McGraw-Hill, Inc. New York (1963).

Polss, P., "What Additives Do for Gasoline." Hydrocarbon Processing, Vol. 52, No. 2 (February 1973), 61-68.

Prather, V., "Advanced Treatment of Petroleum Refinery Wastewater by Autoxidation." Journal of Water Pollution Control Federation, Vol. 42, No. 4 (April 1970), 596-603.

Pursell, W.L., and Miller R.B., "Waste Treatment of Shelly Oil Company's ElDorado, Kansas Refinery." Proceedings of 16th Industrial Waste Conference, Purdue University (May 1961), 292-303.

Rambow, C.A., "Industrial Wastewater Reclamation." Proceedings of 23rd Industrial Waste Conference, Purdue University (May 1968), 1-9.

Rey, G., Lacy, W.I., and Cywin, A., "Industrial Water Reuse; Future Pollution Solution." Environmental Science and Technology, Vol. 5, No. 9 (September 1971), 842-845.

Rose, B.A., "Water Conservation Reduces Load." Industrial Water Engineering, Vol. 6, No. 9 (September 1969), 4-8.

Rose, W.L., Gorringe, G.E., "Activated Sludge Plant Handles Loading Variations." Oil and Gas Journal, Vol. 70, No. 10 (October 1972), 62-65.

Ross, W.K., and Sheppard, A.A., "Biological Oxidation of Petroleum Phenolic Waste Waters." Proceedings of 10th Industrial Waste Conference, Purdue Univeraity (May 1955), 106-119.

Santoleri, J.J., "Chlorinated Hydrocarbon Waste." Chemical Engineering Process, Vol. 69, No. 1 (January 1973), 68-74.

Sawyer, G.N., "Fertilization of Lakes by Agriculture and Urban Drainage." Journal of New England Water Works Association, (1949).

"Sequential Gasification." Oil and Gas Journal, Vol. 70, No. 10 (October 1972), 116-117.

Shreve, R.N., Chemical Process Industries, third edition; McGraw-Hill, Inc., New York (1956).

Smallwood, D.S., Ramanathan, M., and Dougherty, J.H., "Reference Effluent Guidelines for Organic Chemical Industries, Process Narratives." Roy F. Weston, Inc. report to Environmental Protection Agency, Washington, D.C., Contract No. 14-12-963, (Unpublished).

Snoeyink, V.L., Weber, W.J., and Mark, H.B., "Sorption of Phenol and Nitrophenol by Active Carbon." Environmental Science and Technology, Vol. 3, No. 10 (October 1969), 918-926.

"Sohio Uses Sewage-Plant Effluent as Stop Feedwater." Oil and Gas Journal, Vol. 70, No. 2 (February 1972), 80-82.

"Standard Methods for the Examination of Water and Wastewater." American Public Health Association, Inc., New York (1971).

Steck, W., "The treatment of Refinery Wastewater with Particular Consideration of Phenolic Streams." Proceedings of 21st Industrial Waste conference, Purdue University (May 1966), 783-790.

Stroud, P.W., Sorg, L.V., Lamkin, J.C., "The First Large Industrial Waste Treatment Plant on the Missouri River." Proceedings of 18th Industrial Waste Conference, Purdue University (May 1963), 460-475.

Taras, M.J., ed., Standards Methods for the Examination of Water and Wastewater American Public Health Assocation, Washington, D.C., (1971).

Thompson, C.S., Stock, J., and Mehta, D.L., "Cost and Operating Factors for Treatment of Oily Waste Water." Oil and Gas Journal, Vol. 70, No. 11 (November 1972), 53-56.

Thompson, S.J., "Techniques for Reducing Refinery Waste Water." Oil and Gas Journal, Vol. 68, No. 10 (October 1970), 93-98.

Vania, G.B., Bhatla, M.N., Thompson, A.F., and Bralston, C.W., "Process Development, Design, and Full-Scale Operational Experience at a Petrochemical Manufacturing Wastewater Treatment Plant." Proceedings of 44th Conference of the Water Pollution Control Conference (October 1971), 1-25.

Water; Atmospheric Analysis, Part 23, "Standard Method of Test for Bio-Chemical Oxygen Demand of Industrial Water and Industrial Waste Water." 1970 Annual Book of ASTM Standards, American Society for Testing and Materials, Philadelphia, Pennsylvania (1970).

"Water Quality Criteria." State Water Quality Control board, Publication No. 3-A, Sacramento, California (1963).

Wigren, A.A., and Burton, F.L., "Refinery Wastewater Control." Journal of Water Pollution Control Federation, Vol. 44, No. 1 (January 1972), 117-128.

Summary of EPA Research Development and Demonstration Projects Utilizing Activated Carbon Adsorption Technology

EPA Advanced Wastewater Treatment Demonstration Grant No. 17080 EDV, "Tertiory Treatment by Lime Addition at Santee, California, "Santee County Water District, Santee, California, January 12, 1966.

EPA Advanced Wastewater Treatment Demonstration Grant No. 802719, "Interim Wastewater Treatment Plant Demonstration, Covington Kentucky, "Campbell and Kenton Counties Sanitation District, July 23, 1973.

EPA Advanced Wastewater Treatment Demonstration Grant No. 80266, "Physical Chemical Treatment Evaluation", Metropolitan Sewer Board Minneapolis, St. Paul Minn., January 1, 1974.

EPA Storm and Combined Sewer Research Grant No. 802433 Rice University, Houston, Texas, "Maximum Utilization of Water Resources in a Planned Community, July 16, 1973.

EPA Industrial Research Grant No. 17020 EPF, "Adsorption from Aqueaus Solution", University of Michigan, Ann Arbor Michigan, October 1, 1969.

EPA Industrial Demonstration Grant No. 12050GXE, "Treatment of Oil Refinery Wastewaters for Reuse Using a Sand Filter Activated Carbon System, B.P. Oil Company, Marcus Hook, Pennsylvania January 1, 1971.

EPA Industrial Demonstration Grant No. 12020EAS "Recondition and Reuse of Organically Contaminated Waste Sodium Chloride Brines, Dow Chemical Company, Midland, Michigan, January 6, 1969.

EPA Advanced Wastewater Treatment Demonstration Grant No. 11060 EGP, "Advanced Waste Treatment at Painesville, Ohio, City of Painesville, Ohio, December 15, 1969.

EPA Research Grant No. 12040 HPK, "Organic Compounds in Pulp Mill Lagoon Discharge", University of Washington.

EPA Research Study No. 21ACU07, "Development of Analog Chemical Treatment", EPA NERC Cincinnati, Ohio, January 7, 1972.

EPA Research STudy No. 21 ABD 06, "Process Modification to Enhance Removal of Heavy Metals, NERC Cincinnati, Ohio January 4, 1973.

EPA Advanced Wastewater Treatment Demonstration Grant No. 11010 EHI, "Teritory Treatment of Combined Storm Water Sanitary Relief Discharge and Sewage Treatment Plant Effluent", Sanitary District of East Chicago, January 12, 1966.

EPA Advanced Waste Treatment Demo Grant No. 11010 DAB, "Chemical Clarification and Carbon Filtration and Adsorption as Secondary Treatment for Rocky River Wastewater Treatment Plant, Cuyahoga County, Ohio Sewer District, August 16, 1968.

EPA Industrial Demonstration Grant No. 801431, "An Activated Carbon Secondary Treatment System for Purification of a Chemical Plant Wastewater for maximum Reuse, "Hercules, Inc., January 3, 1973.

EPA Demonstration Grant No. 800554, "Carbon Adsorption and Regeneration for Petrochemical Waste Treatment", University of Missouri, Columbia, Missouri, January 6, 1972.

EPA Research Contract No. 68-01-0183 "Physical Chemical Treatment of Municipal Waste", Envirotech Corporation Salt Lake City, Utah, July 4, 1972.

EPA Research Contract No. 68-01-0137, "Development and Demonstration of Device for on Board Treatment of Wastes from Vessels," AWT Systems Inc., Wilmington Delaware, March 6, 1971

EPA Research Contract No. 68-01-0130, "Device for on Board Treatment of Wastes from Vessels", Fairs banks Morse, Inc., Beloit, Wisconsin, March 6, 1971.

EPA Research Contract No. 68-01-0099, "Development of Modular Transportable Prototype System for Treating Spilled Hazardous Materials", Hernord, Inc., Milwaukee, Wisconsin, June 29, 1971.

EPA Research Contract No. 68-01-0077, "Process for Housing and Community Development Industries", Levitt and Son, Nassau County, New York, June 15, 1971.

EPA Research Contract No. 68-01-0013, "Waste Heat Utilization in Waste Water Treatment", URS Research Company, San Mateo, California, December 31, 1970.

EPA Research Contract No. 58-01-0901, "Study of Improvements in Granular Carbon Adsorption Process", FMC Corporation, Princeton, New Jersey, June 26, 1970.

EPA Advanced Waste Treatment Contract No. 58-01-0444, "Carbon Adsorption and Electro dialipes for Demineralization at Santee California," Santee Coutny Water District, Santee California, June 29, 1968.

EPA Research Contract No. 58-01-0400, "Activated Carbon Powder Treatment in Slurry Clarifiers", Infilco, Fullers Company, Tucson, Arizona, June 9, 1968.

EPA Research Contract No. 58-01-0075, "Study of Powdered Carbons for Waste Water Treatment, "West Virginia Pulp and Paper Company, Covington, Virginia, June 29, 1967.

EPA Research Study No. 21ABK-31, "Treatability of Organic Compounds", EPA NERC Cincinnati, Ohio January 7, 1973.

EPA Research Study No. 21 ABK 16, "Treatability of Organic

EPA Research Study No. 21 ACP 09, "Removal of Toxi Metals in Physical Chemical Pilot Plant", EPA NERC Cincinnati, Ohio January 1, 1972.

EPA Research Study No. 16 ACG-05, "Identify Pollutants in Physical Chemical Treated Wastes", EPA NERC Corvallis, Oregon, January 8, 1971.

EPA Advanced Waste Treatment Demonstration Grant No. 800685, "A Demonstration of Enhancement of Effluent from Trickling Filter Plant", City of Richardson, Texas, December 24, 1971.

EPA Advanced Waste Treatment Demonstration Grant No. 801026, "Removal of Heavy Metals by Waste Water Treatment Processes", City of Dallas, Texas, January 2, 1972.

EPA Advanced Waste Treatment Demonstration Grant No. 801401, "Piscataway Model Advanced Waste Treatment Plant", Washington Suburban Sanitary Commission, Hyattsville, Maryland, January 1, 1967.

EPA Research Grant No. 800661, "Oxidation Mechanisms on Supported Chromia Catalysts, "Purdue Research Foundation, Lafayette, Indiana, January 6, 1970.

EPA Research Grant No. 12130 DRO, "Deep Water Pilot Plant Treatability Study", Delaware River Basin Commission, Trenton, New Jersey, July, 1971.

SECTION XVI

GLOSSARY AND ABBREVIATIONS

Act

The Federal Water Pollution Act Amendments of 1972.

Aerobic

In the presence of oxygen.

Anaerobic

Living or active in absence of free oxygen.

Aquatic Life

All living forms in natural waters, including plants, fish, shellfish, and lower forms of animal life.

Aromatics

Hydrogen compounds involving a 6-carbon, benzene ring structure.

Best Available Technology Economically Achievable (BATEA)

Treatment required by July 1, 1983 for industrial discharge to surface waters as defined by section 301 (b) (2) (A) of the Act.

Best Practicable Control Technology Currently Achievable (BPCTCA)

Treatment required by July 1, 1977 for industrial dsicharge to surface waters as defined by section 301 (b) (1) (A) of the Act.

Best Available Demonstrated Technology (BADT)

Treatment required for new source as defined by section 306 of the Act.

Biochemical Oxygen Demand (BOD)

Oxygen used by bacteria in consuming a waste substance.

Blowdown

A discharge from a system, designed to prevent a buildup of some material, as in boiler and cooling tower to control dissolved solids.

By-Product

Material which, if recovered, would accrue some economic benefit, but not necessarily enough to cover the cost of recovery.

Capital Costs

Financial charges which are computed as the cost of capital times the capital expenditures for pollution control.

Catalyst

A substance which can change the rate of a chemical reaction, but which is not itself involved in the reaction.

Category and Subcategory

Divisions of a particular industry which processed different traits which affect water quality and treatability.

Chemical Oxygen Demand (COD)

Oxygen consumed through chemical oxidation of a waste.

Clarification

The process of removing undissolved materials from a liquid. Specifically, removal of solids either by settling or filtration.

Effluent

The flow of waste waters from a plant or wash water treatment plant

Depreciation

The cost reflecting the deterioration of a capital asset over its useful life.

End-of-Pipe Treatment

Treatment of overall refinery wastes, as distinguished from treatment of individual processing units.

Filtration

Removal of solid particules or liquids from other liquids or gas streams by passing the liquid or gas stream through a filter media.

Industrial Waste

All wastes streams within a plant. Included are contact and noncontact waters. No included are wastes typically considered to be sanitary wastes.

Investment Costs

The capital expenditures required to bring the treatment of control technology into operation. These include the traditional expenditures such as design; purchase of land and materials; site preparation; construction and installation; etc., plus any additional expenses required to bring the technology into operation including expenditures to establish related necessary solid waste disposal.

New Source

Any building, structure, facility or investment from which there is or may be a discharge of pollutants and whose contribution is commercial after publication of the proposed regulation.

pH

A measure of the relative acidity or alkalinity of water. A pH of 7.0 indicates a neutral condition. A greater pH indicates alkalinity and a lower pH indicates acidity. A one unit change in pH indicates 10 fold change in acidity and alkalinity.

Pretreatment

Treatment proved prior to discharge to a publicly owned treatment works.

Process Effluent or Discharge

The volume of water emerging from a particular use in the plant.

Plant Effluent or Discharge After Treatment

The volume of waste water discharge from the industrial plant. In this definition, any waste treatment device is considered part of the industrial plant.

Raw Waste Load

Untreated waste effluent or waste effluents.

Secondary Treatment

Biological treatment provided beyond primary clarification.

Sludge

The settled solids from a thickener or clarifier. Generally, almost any flocculated settled mass.

Surface Waters

Navigable waters. The waters of the United States, including the territorial seas.

Total Suspended Solids (TSS)

Any solids found in waste water or in the stream which in most cases can be removed by filtration. The origin of suspended matter may be man-made wastes or natural sources such as silt from erosion.

Waste Discharged

The amount (usually expressed as weight) of some residual substance generated by a plant process or the plant as whole and which is suspended or dissolved in water. This quantity is measured before treatment.

Waste Loading

Total amount of pollutant substance, generally expressed as pounds per day.

Abbreviations

AL - Aerated Lagoon

AS - Activated Sludge

BADT - Best Available Demonstrated Technology

BATEA - Best Available Technology Economically Achievable

BPCTCA - Best Practicable Control Technology Currently Available

BOD - Biochemical Oxygen Demand

BTX - Benzene-Toluene-Xylene mixture

COD - Chemical Oxygen Demand

cu m - cubic meter(s)

DAF - Dissolved Air Flotation

DO - Dissolved Oxygen

gpm - Gallons per minute

k - thousand(e.g., thousand cubic meters)

kg - Kilogram(s)

l - liter

lb - pound(s)

LPG - Liquified Petroleum Gas

M - Thousand (e.g., thousand barrels)

mgd - Millions gallons per day

mg/l - Milligrams per liter (parts per million)

MM - Million (e.g., million pounds)

psig - pounds per square inch, gauge (above 14.7 psig)

RWL - Raw Waste Load

sec - Second-unit of time

scf - Standard cubic feet of gas at 60°F and 14.7 psig

SIC - Standard Industrial Classification

SS - Suspended Solids

TOC - Total Organic Carbon

TSS - Total Suspended Solids

VSS - Volatile Suspended Solids

METRIC TABLE

CONVERSION TABLE

MULTIPLY (ENGLISH UNITS)		by	TO OBTAIN (METRIC UNITS)	
ENGLISH UNIT	ABBREVIATION	CONVERSION	ABBREVIATION	METRIC UNIT
acre	ac	0.405	ha	hectares
acre - feet	ac ft	1233.5	cu m	cubic meters
British Thermal Unit	BTU	0.252	kg cal	kilogram - calories
British Thermal Unit/pound	BTU/lb	0.555	kg cal/kg	kilogram calories/kilogram
cubic feet/minute	cfm	0.028	cu m/min	cubic meters/minute
cubic feet/second	cfs	1.7	cu m/min	cubic meters/minute
cubic feet	cu ft	0.028	cu m	cubic meters
cubic feet	cu ft	28.32	l	liters
cubic inches	cu in	16.39	cu cm	cubic centimeters
degree Fahrenheit	°F	0.555(°F-32)*	°C	degree Centigrade
feet	ft	0.3048	m	meters
gallon	gal	3.785	l	liters
gallon/minute	gpm	0.0631	l/sec	liters/second
horsepower	hp	0.7457	kw	killowatts
inches	in	2.54	cm	centimeters
inches of mercury	in Hg	0.03342	atm	atmospheres
pounds	lb	0.454	kg	kilograms
million gallons/day	mgd	3,785	cu m/day	cubic meters/day
mile	mi	1.609	km	kilometer
pound/square inch (gauge)	psig	(0.06805 psig +1)*	atm	atmospheres (absolute)
square feet	sq ft	0.0929	sq m	square meters
square inches	sq in	6.452	sq cm	square centimeters
ton (short)	ton	0.907	kkg	metric ton (1000 kilograms)
yard	yd	0.9144	m	meter

* Actual conversion, not a multiplier

U.S. ENVIRONMENTAL PROTECTION AGENCY (A-107)
WASHINGTON, D.C. 20460

POSTAGE AND FEES PAID
ENVIRONMENTAL PROTECTION AGENCY
EPA-335