October 1975

Environmental Monitoring Series

ANALYSIS OF CARBON-14 AND TRITIUM IN REACTOR STACK GAS

Environmental Monitoring and Support Laboratory
Office of Research and Development
U.S. Environmental Protection Agency
Cincinnati, Ohio 45268

RESEARCH REPORTING SERIES

Research reports of the Office of Research and Development, U.S. Environmental Protection Agency, have been grouped into five series. These five broad categories were established to facilitate further development and application of environmental technology. Elimination of traditional grouping was consciously planned to foster technology transfer and a maximum interface in related fields. The five series are:

1. Environmental Health Effects Research
2. Environmental Protection Technology
3. Ecological Research
4. Environmental Monitoring
5. Socioeconomic Environmental Studies

This report has been assigned to the ENVIRONMENTAL MONITORING series. This series describes research conducted to develop new or improved methods and instrumentation for the identification and quantification of environmental pollutants at the lowest conceivably significant concentrations. It also includes studies to determine the ambient concentrations of pollutants in the environment and/or the variance of pollutants as a function of time or meteorological factors.

This document is available to the public through the National Technical Information Service, Springfield, Virginia 22161.

EPA-600/4-75-011
October 1975

ANALYSIS OF CARBON-14 AND TRITIUM IN REACTOR STACK GAS

by

Seymour Gold

Radiochemistry and Nuclear Engineering Branch
Environmental Monitoring and Support Laboratory
Cincinnati, Ohio 45268

ENVIRONMENTAL MONITORING AND SUPPORT LABORATORY
OFFICE OF RESEARCH AND DEVELOPMENT
U.S. ENVIRONMENTAL PROTECTION AGENCY
CINCINNATI, OHIO 45268

DISCLAIMER

This report has been reviewed by the Environmental Monitoring and Support Laboratory, U.S. Environmental Protection Agency, and approved for publication. Mention of trade names or commercial products does not constitute endorsement or recommendation for use.

FOREWORD

Environmental measurements are required to determine the quality of ambient waters and the character of waste effluents. The Environmental Monitoring and Support Laboratory - Cincinnati conducts research to:

- Develop and evaluate techniques to measure the presence and concentration of physical, chemical, and radiological pollutants in water, wastewater, bottom sediments, and solid waste.
- Investigate methods for the concentration, recovery, and identification of viruses, bacteria and other microbiological organisms in water. Conduct studies to determine the responses of aquatic organisms to water quality.
- Conduct an Agency-wide quality assurance program to assure standardization and quality control of systems for monitoring water and wastewater.

With future reliance on nuclear power stations for energy sources as a possibility, environmental monitoring programs must be improved and tested to measure accurately the radiation exposure to concerned individuals. The Environmental Protection Agency has been engaged in studies of this nature to develop methodology and to provide information for evaluating such monitoring programs. One aspect of this type of study is the development of a technique to measure the concentration and the chemical species of two biologically significant radiogases, ^{3}H and ^{14}C, which are discharged into the environment by these power stations.

Dwight G. Ballinger
Acting Director
Environmental Monitoring and Support Laboratory
Cincinnati

ABSTRACT

The analysis of gases from nuclear power stations includes determination of tritium and ^{14}C in several molecular forms. In this procedure, tritium water vapor is collected in a freeze trap, and ^{14}C (as CO_2) is collected by precipitation in bubblers.

Water vapor, hydrogen, carbon dioxide, and methane gas carriers are added to a gas sample. The sample is drawn into the gas analysis system by means of a vacuum pump and is flushed through the system with purified air. HTO is collected in a freeze trap at -80 °C, and $^{14}CO_2$ is precipitated as barium carbonate with freshly prepared barium hydroxide in a bubbler. Water mist from the bubblers is then removed from the gas stream as the sample passes through a silica gel spray trap. The gas is then passed through the catalytic oxidation chamber, which converts the remaining gaseous hydrogen and carbon compounds to water and carbon dioxide. The water is collected in a second freeze trap, and the CO_2 is precipitated in a second bubbler. The water fractions are weighed and then rinsed with dioxane into plastic vials and counted by liquid scintillation. The barium carbonate precipitates are centrifuged, washed, and transferred to stainless steel planchets for weighing. The precipitates are then transferred to glass vials and counted by liquid scintillation as a suspension.

Minimum detectable levels for both ^{3}H and ^{14}C are 0.4 picocuries per sample for samples varying in size from 1 cc to 20 liters.

ACKNOWLEDGEMENTS

The valuable assistance of Mrs. Betty Jacobs, Physical Science Technician, in the initial stages of the investigation is gratefully acknowledged. In addition, Mrs. Eleanor Martin, Physical Science Technician, and Mr. David Currie, University of Cincinnati Co-op Student, tested the procedure and provided pertinent comments toward its operation. Their efforts are also greatly appreciated.

INTRODUCTION

The analysis of gases from nuclear power stations includes determination of tritium and ^{14}C in several forms. In this procedure, tritium water vapor and ^{14}C in CO_2 are collected in a freeze trap and by chemical absorption, respectively. All other species of ^{3}H and ^{14}C are catalytically oxidized at 550 C to water and CO_2 and then collected as above. Early workers used copper oxide to convert hydrogen and carbon monoxide to H_2O and CO_2.[1,2] More recently,[3] tritium in the atmosphere has been oxidized to HTO with palladium. In this procedure, a more active catalyst is used to convert all forms of hydrogen and carbon compounds, including methane,[4] to H_2O and CO_2.

Water vapor, hydrogen, carbon dioxide, and methane gas carriers are added to a gas sample. The sample is drawn into the gas analysis system by means of a vacuum pump and is flushed through the system with purified air. HTO is collected in a freeze trap at -80C and $^{14}CO_2$ is precipitated as barium carbonate with freshly prepared barium hydroxide.[5] Water mist from the bubblers is removed from the gas sample at this point by passing it through a silica gel spray trap. The gas is then passed through a catalytic oxidation chamber that converts the remaining gaseous hydrogen and carbon compounds to water and carbon dioxide. The water is collected in a freeze trap, and the CO_2 is collected as barium carbonate in a bubbler, as before. The water is rinsed with dioxane into a plastic vial and counted by liquid scintillation. The barium carbonate precipitates are centrifuged, washed, and transferred to stainless steel planchets for weighing. The precipitates are then transferred to glass vials, and counted by liquid scintillation as a suspension.[6]

MATERIALS AND METHODS

REAGENTS

Acetone
Barium chloride, $BaCl_2$: 0.5 M (CO_2-free)
Carbon dioxide carrier: gas
1,4-Dioxane, $C_4H_8O_2$: scintillation grade
Distilled water: boiled (CO_2-free)
Dry ice
Hydrogen carrier: gas
Methane carrier: gas
Palladium sponge (+40 mesh); supplier: Mathey Bishop, Malvern, PA
Scintillation solution (dioxane), prepared reagent
Scintillation solution (toluene), prepared reagent

Sodium hydroxide, NaOH: 18 M (CO_2-free)
Toluene, $C_6H_5CH_3$: scintillation grade

Prepared Reagents:

Scintillation solution (dioxane) for tritiated water: mix thoroughly 7 g PPO, 1.5 g bis-MSB, and 120 g naphthalene diluted to 1 liter with 1,4-dioxane (scintillation grade). Use 16 ml per sample.

Scintillation solution (toluene) for Barium ^{14}Carbonate: dissolve 6 g PPO, 0.25 g dimethyl-POPOP diluted to 1,000 ml with toluene (scintillation grade). Add 45 g Cab-o-sil and stir with a magnetic stirrer. Use 16 ml per sample.

EQUIPMENT

Tube furnace with temperature controller to operate at 550 ± 20 C with a minimum heating length of 10 cm.

Pyrex tube, 9-mm OD. Fill to 10 cm length with catalyst and place catalyst tube within furnace.

Gas handling system (see Figure 1):
- Freeze traps (see Figure 2)
- Flowmeter with range of 100 to 1,000 cc per min
- Gas bottle, glass sample holder, 500 cc
- Gas bubblers (midget impingers) (see Figure 3)
- Glass-teflon needle valve to regulate flow
- Glass stopcocks, straight and three-way, standard taper plugs with 2-mm bore
- Manometer, 0 to 8,000 mm Hg range
- Pyrex tubing, 7-mm OD
- Rubber tubing for connections
- Vacuum pump

Air purification:
Three tubes consisting of indicating silica gel, Ascarite 8-20 mesh, and 13X-1.68 mm molecular sieve pellets (see Figure 1 for order).

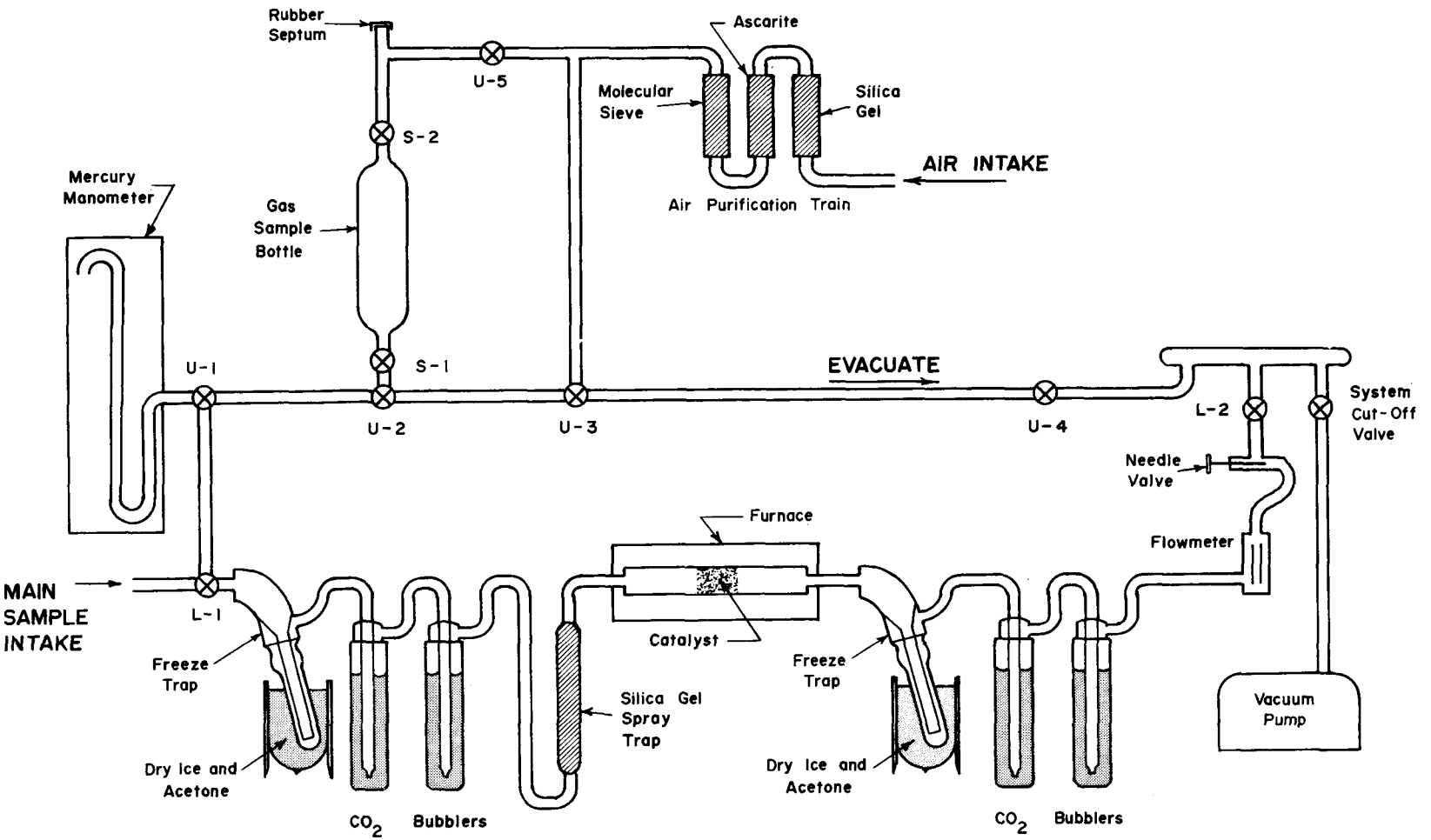

Figure 1. Gas handling system

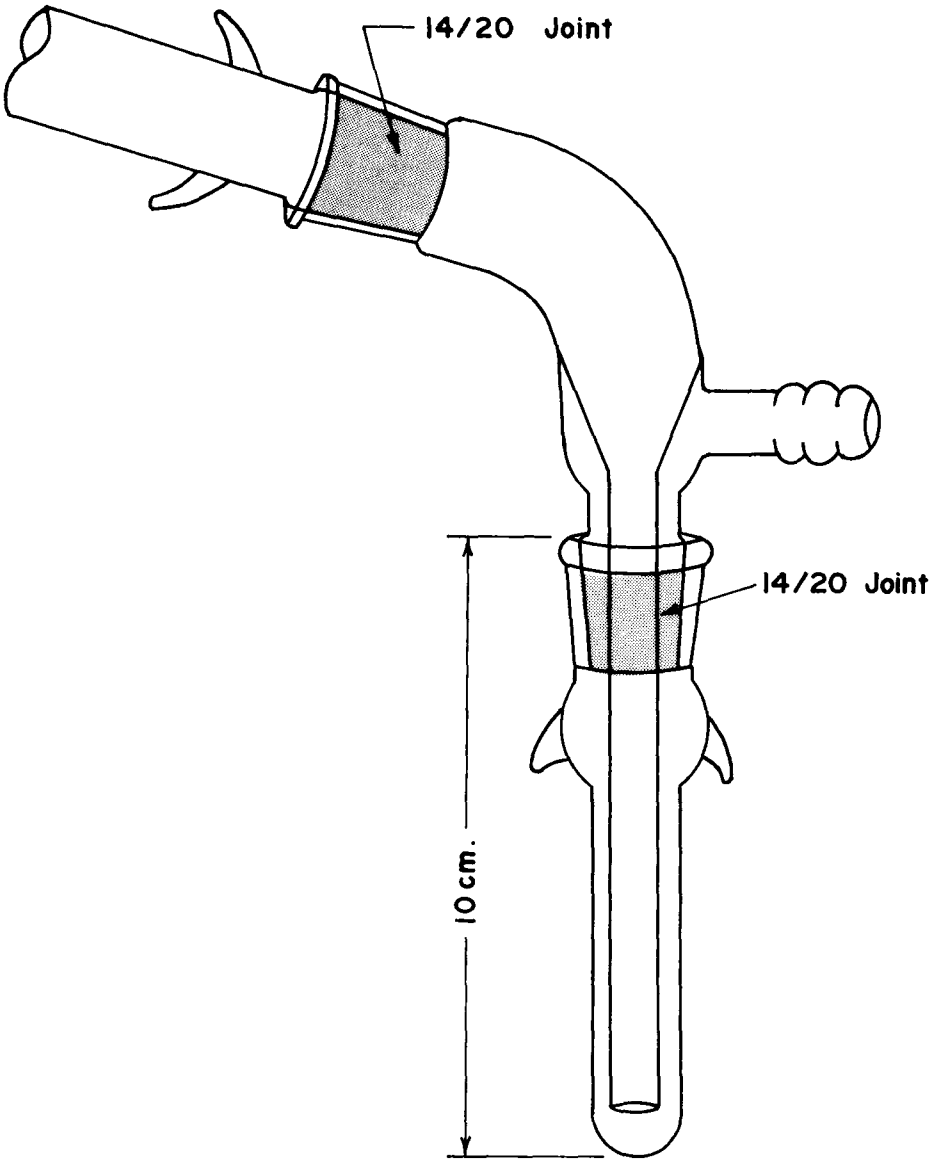

Figure 2. Freeze trap assembly.

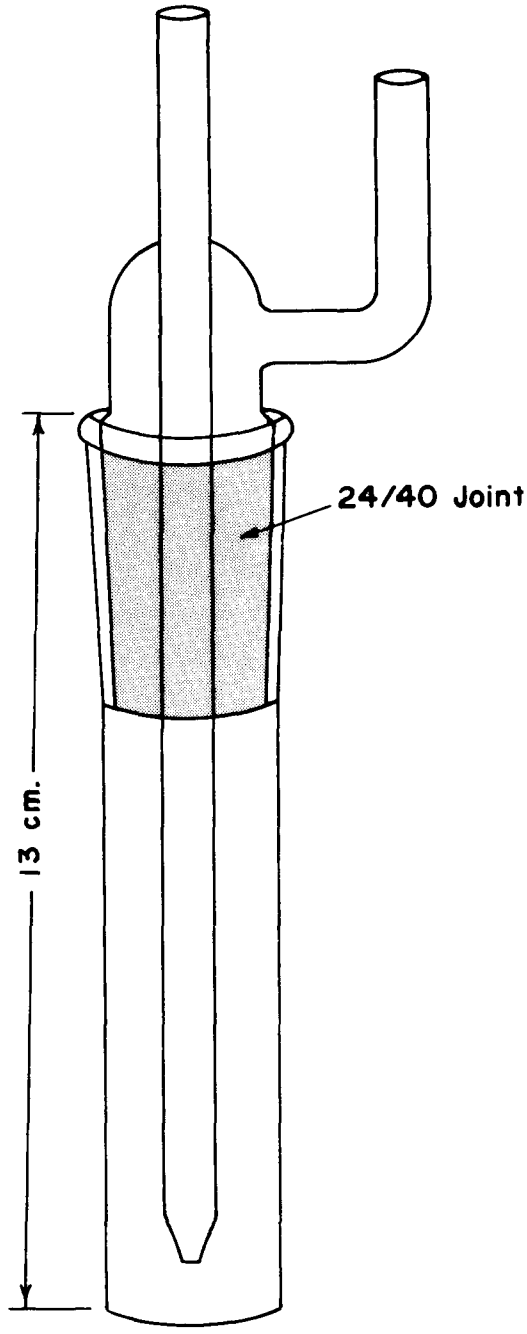

Figure 3. Gas bubbler "midget impinger"

GAS ANALYSIS METHOD

A. Flushing the gas handling system (Figure 4).

With the pump running and the furnace at the proper temperature, open all valves necessary to allow air to flow through valves U-5, S-2, S-1, U-2, U-1, L-1, and L-2; have valves U-3 and U-4 closed. Flush the system for 10 min at 500 ml per min, or longer. When flushing the system, substitute glass tubing in place of the freeze traps and bubblers.

B. Evacuating gas sample bottle (Figure 5).

1. After flushing the system, close valves U-5, L-1, and L-2. Adjust valve U-1 to connect manometer and leg between U-1 and L-1 to system. Adjust valve U-3 to evacuate sample bottle (open to system, closed to air intake). Open valve U-4 to start evacuation. At this point, S-2, S-1, and U-2 are also open.

2. When 0-mm pressure is reached, turn valve U-3 to allow clean, dry air to enter sample bottle; then turn the valve to evacuate again. Repeat twice.

3. Close valves U-3 and U-4.

C. Preparing the gas sample bottle for blank run.

1. Flush the system (see A) and evacuate the gas sample bottle (see B).

2. When evacuation is completed, close valves S-2 and S-1 to hold vacuum in sample bottle, and leg between S-2 and U-5.

3. Shut off valve U-4. Open valve U-3 to allow the rest of the system to come to equilibrium with the atmosphere. Then shut off valve U-3.

D. Filling the gas sample bottle for normal sample run (Figure 6).

1. Flush the system (see A) and evacuate the sample bottle (see B).

When evacuation is complete, close valve S-2 to keep sample from going into the line above sample bottle. Valves S-1, U-2, and U-1 should be open.

2. Attach sample to main sample intake. Calculate pressure needed to fill sample bottle with the volume desired for analysis as follows:

Volume of gas (room conditions) in bottle

$$= \frac{\text{pressure in bottle}}{\text{atmospheric pressure}} \times \text{volume of bottle.}$$

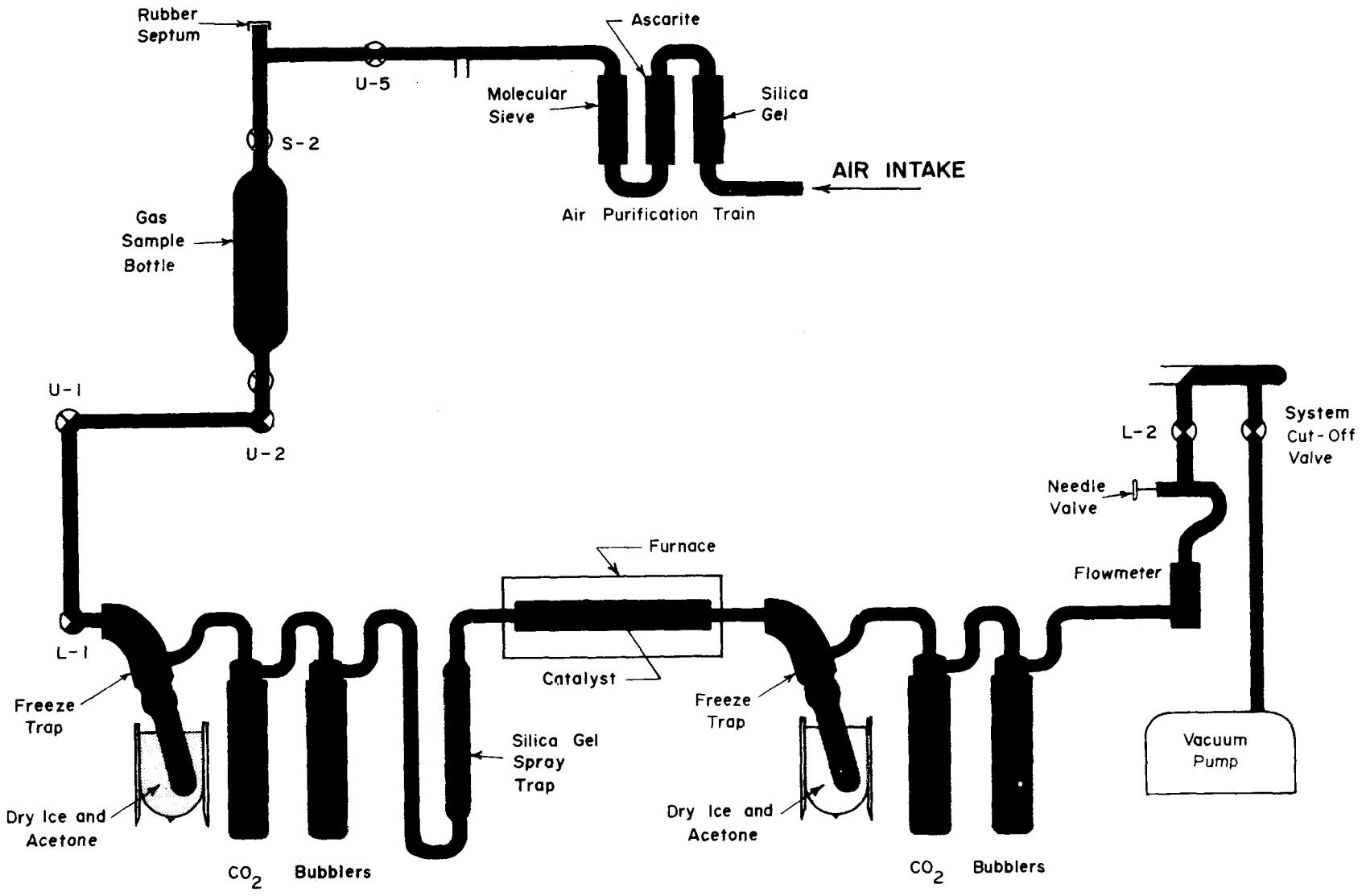

Figure 4. Gas flow through the system.

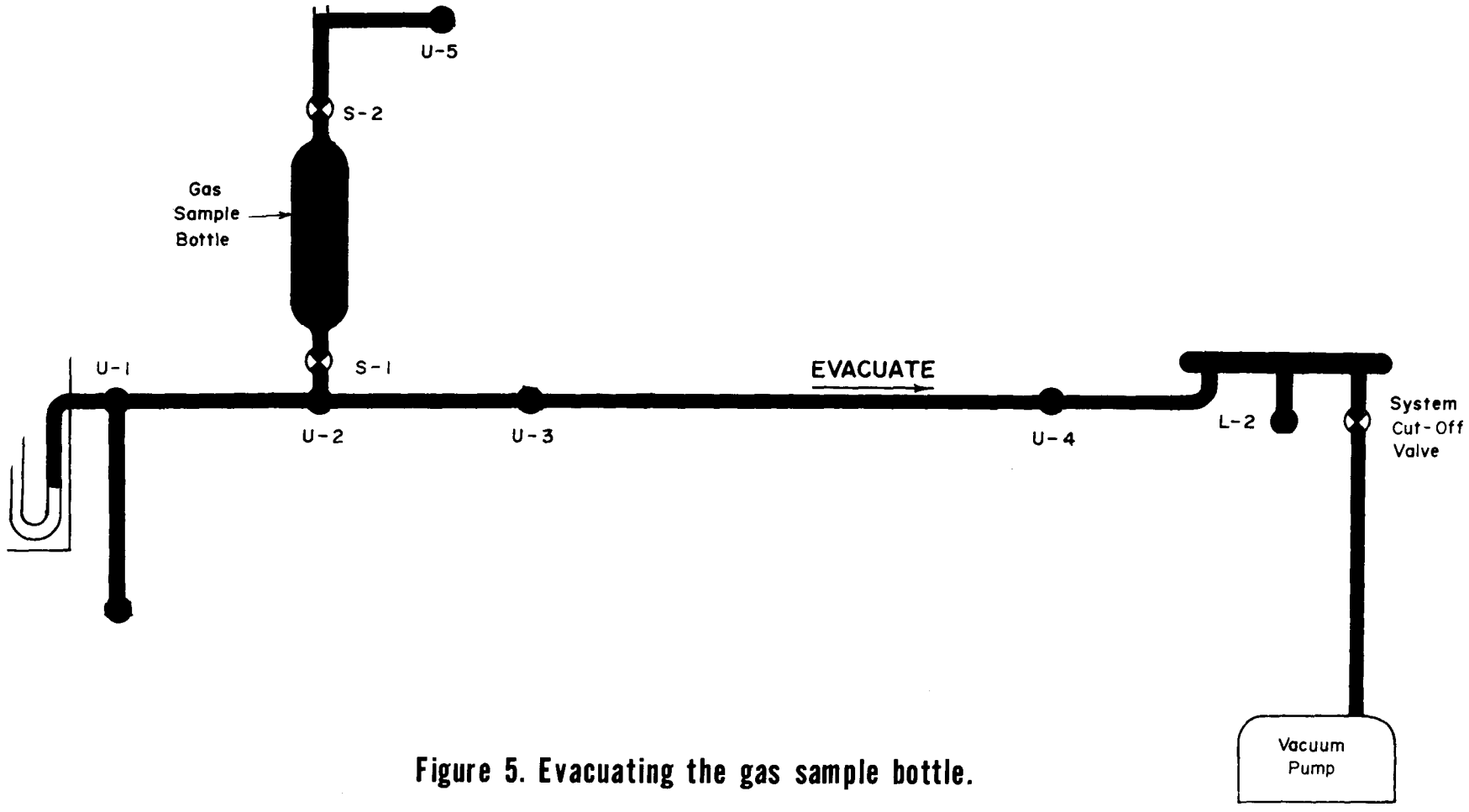

Figure 5. Evacuating the gas sample bottle.

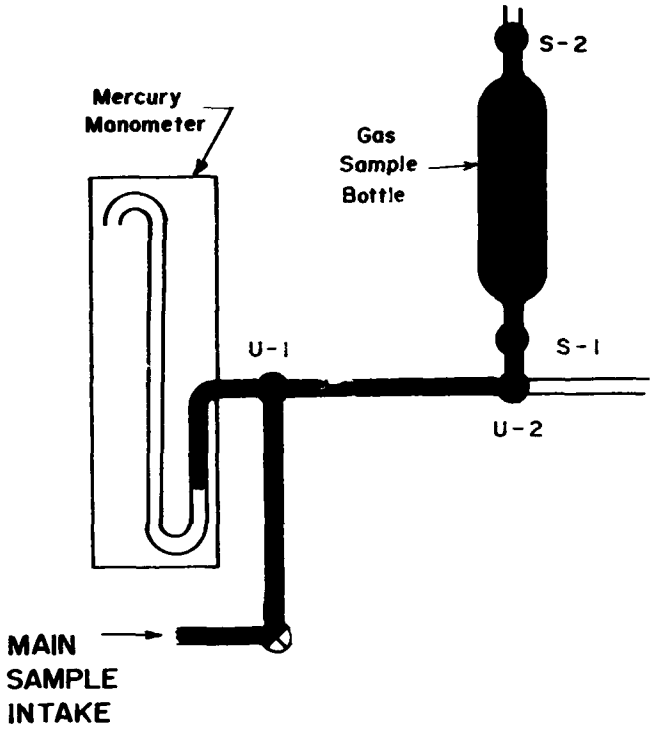

Figure 6. Filling the evacuated gas bottle with the sample.

Open valve L-1 to allow sample to flow from main sample intake to gas bottle. Shut L-1 when desired pressure is reached. Now close S-1. Flush the lines between L-1 and S-1 alternating vacuum and clean air, using valve U-2.

E. Adding carrier to the sample bottle.

1. Carriers are added to the sample bottle by first injecting them into the rubber septum above sample bottle. Fill a hypodermic syringe with the proper amount of carrier and inject through rubber cap. With valve S-1 closed, open valve S-2 to allow carrier to be drawn into bottle, then close the valve. When adding water to the sample, allow air into the line first so that the vacuum will not cause the addition of more than is required. After carriers are added, open valves S-2 and U-5 to equalize pressure with the atmosphere in all lines except for gas bottle between S-1 to U-5.

2. Disconnect the manometer by turning valve U-1. Connect lower system with upper system by turning valve L-1.

F. Gas flow during analyses (Figure 4).

1. After sample bottle has been prepared and carriers added, place freeze traps and bubblers in proper positions. Cool the bottom of the freeze trap in a dry ice/acetone mixture in dewar containers. Close needle valve. Open valves L-2, L-1, U-1, U-2, and S-2; then open needle valve slowly until a few bubbles escape in bubblers.

2. Open valve S-1 slowly, watching bubblers to be sure that there is no excess pressure or vacuum in the sample bottle. Open valve U-5 slowly, then adjust needle valve to proper flow rate. Allow gas sample to flow through for a time equal to 6 x [(vol. sample bottle, cc)/flow rate in cc/min)] + 5 min. Upon completion of analysis, close valve L-2, remove freeze traps and bubblers, and replace with glass tubing.

PROCEDURE

Procedure time for one sample is 2 to 3 hours, depending on sample size.

1. Connect the apparatus for gas analysis as shown in Figure 1.

2. Prepare fresh reagent in the bottom of each of the two pairs of gas bubblers (Figure 3) by mixing approximately 20 ml boiled distilled water, 1.0 ml 0.5 M $BaCl_2$ solution (CO_2-free), and 10 drops 18 M NaOH (CO_2-free) in each bubbler. (Two bubblers are used in series to ensure absorption of any CO_2 not trapped in the first bubbler.) Bring volume to 25 ml with additional boiled distilled water. Close the bubblers and seal the ends of the inlet and outlet tubes with rubber tubing seals (a short piece of rubber tubing with a piece of solid glass rod in one end) to prevent absorption of CO_2 from the air.

3. Weigh two freeze trap assemblies (Figure 2) to $\pm$ 0.1 mg. Each assembly consists of a freeze trap with a hollow glass stopper at the inlet end and a small rubber tubing seal at the outlet end.

4. Flush the system as described in A of the preceding section and evacuate the gas bottle as in B.

5. Prepare the gas sample bottle either for a blank or for the gas sample to be analyzed as in the preceding sections C or D. Place bubblers and freeze traps in the system. Cool freeze trap with dry ice/acetone mixture. Add 3 cc CO_2 carrier, 3 cc CH_4 carrier, and 10 cc H^2 carrier at room conditions as in section E. Add 3.0 mg water with a microliter syringe if the sample contains no water vapor.

6. With the furnace temperature at 550 C, pass the gas sample through the system at a rate of approximately 100 cc/min, as in section F.

7. After the sample has been completely swept from the sample chamber, turn off the vacuum pump. Remove the bubblers and attach rubber tubing seals. Remove the freeze traps and seal with hollow glass stopper and rubber tubing seals (see step 3).

8. Transfer each of the solutions containing the $BaCO_3$ from the first pair of bubblers with boiled distilled water, in a wash bottle, to two 50-ml polypropylene tubes with caps, and heat in a warm-water bath. Cap the tubes, centrifuge, discard the supernatants, and combine the precipitates. Do the same for the second pair of bubblers.

9. Wash each of the combined precipitates with 30 ml boiled distilled water. Cap the tubes and centrifuge and discard the wash solutions.

10. Take up each precipitate in 5 ml boiled distilled water and transfer quantitatively to tared stainless steel planchets. Dry under a heat

lamp, cool to room temperature, and weigh. Calculate theoretical yields from carrier volume by correcting to STP conditions. (At 20C and 760 mm, the 3.0 cc CO_2 or 3.0 cc CH_4 should give 24.61 mg $BaCO_3$ for a 100 percent chemical yield.

11. Quantitatively scrape each dry $BaCO_3$ precipitate from the planchets with a clean rubber policeman and transfer each one to a glass scintillation vial. Add 15 ml scintillation solution (toluene), and shake thoroughly. Place in liquid scintillation counter and allow samples to dark adapt before counting.

12. Prepare background and standard ^{14}C samples as follows:
    ^{14}C background - 15 ml scintillation solution (toluene)
    20 mg $BaCO_3$
    100 λ toluene

    ^{14}C standard - 15 ml scintillation solution (toluene)
    20 mg $BaCO_3$
    100 λ ^{14}C std in toluene.
    Count alternately with samples at predetermined settings.

13. After the two freeze traps containing HTO have reached room temperature, weigh carefully. Determine yields, corrected to STP conditions. (The 3.0 cc CH_4 + 10 cc H_2 should give 11.98 mg H_2) for a 100 percent chemical yield.)

14. Rinse the water sample from each trap into separate glass scintillation vials with 4 ml each of dioxane. To each, add 16 ml of scintillation solution (dioxane) and mix thoroughly. Place in liquid scintillation counter and allow to dark adapt before counting.

15. Prepare background and HTO standard samples as follows:
    ^{3}H background - 16 ml scintillation solution (dioxane)
    3.5 ml dioxane
    500 λ H_2O (distilled)

    ^{3}H standard - 16 ml scintillation solution (dioxane)
    3.5 ml dioxane
    500 λ tritiated water.
    Count alternately with samples at predetermined settings.

CALCULATION

Calculate the concentration of the tritium and ^{14}C activity in picocuries per milliliter as follows:

$$D = \frac{C}{2.22 \times EVR}$$

where: C = net count rate, counts per min
E = counter efficiency for tritium or for ^{14}C
V = milliliters of sample used
R = fractional chemical yield
2.22 = conversion factor from d/m to picocuries.

METHOD CAPABILITIES

The sensitivity of this method is shown in Table 1. The decontamination factor is greater than 10^4 since no other nuclides are detectable in the counting vial.

Table 1. Sensitivity

Nuclide	Counting efficiency	Background c/m	MDL* (pCi/cc)	Average chemical yield
^{3}H	44%	8.4	0.4/1 cc sample 0.001/400 cc "	100
^{14}C	62%	18.4	0.4/1 cc sample 0.001/400 cc "	100

* The minimum detectable level when counted 3 times for 300 min each.

REFERENCES

1. Taylor, Guy B., An Apparatus for the Analysis of Complex Mixtures of Gas, Ind. Eng. Chem. 6:845-848 (1914).
2. Burrelle, G. A. and Oberfell, C. G., The Use of Copper Oxide for Fractionation Combustion of Hydrogen and Carbon Monoxide in Gas Mixtures, Ind. Eng. Chem. 8:228-231.
3. Ostland, M. G., A Rapid Field Sampling for Tritium in Atmospheric Hydrogen, Report ML 70075, Rosenstiel School of Marine and Atmospheric Sciences, Univ. of Miami, Miami, Florida (1970).
4. Anderson, R. B., Stein, K. C., Feenan, J. J. and Hofer, L. J. E., Catalytic Oxidation of Methane, Ind. & Eng. Chem. 53,10:809-812 (1961).
5. Wilson, C. L. and Wilson, D., Comprehensive Analytical Chemistry, Vol. 1A, Classical Analysis, Elsevier Publishing Co., New York, N. Y., 1959, p. 306.
6. Ott, D. G., Richmond, C. R., Trujillo, T. T. and Foreman, H., Cab-o-Sil Suspensions for Liquid Scintillation Counting, Nucleonics 17,9:106-108 (1959).

TECHNICAL REPORT DATA
(Please read Instructions on the reverse before completing)

1. REPORT NO. EPA-600/4-75-011	2.	3. RECIPIENT'S ACCESSION NO.
4. TITLE AND SUBTITLE ANALYSIS OF CARBON-14 AND TRITIUM IN REACTOR STACK GAS		5. REPORT DATE October 1975 (Issuing Date)
		6. PERFORMING ORGANIZATION CODE
7. AUTHOR(S) Seymour Gold		8. PERFORMING ORGANIZATION REPORT NO.
9. PERFORMING ORGANIZATION NAME AND ADDRESS Environmental Monitoring and Support Laboratory, Office of Research and Development, U.S. Environmental Protection Agency, Cincinnati, Ohio 45268		10. PROGRAM ELEMENT NO. 1HA327
		11. CONTRACT/GRANT NO.
12. SPONSORING AGENCY NAME AND ADDRESS Same as above		13. TYPE OF REPORT AND PERIOD COVERED In-house
		14. SPONSORING AGENCY CODE EPA-ORD

15. SUPPLEMENTARY NOTES

16. ABSTRACT

The analysis of gases from nuclear power stations include determination of tritium and ^{14}C in several molecular forms. In this procedure, tritium water vapor is collected in a freeze trap, and ^{14}C (as CO_2) is collected by precipitation in bubblers. Water vapor, hydrogen, carbon dioxide, and methane gas carriers are added to a gas sample. The sample is drawn into the gas analysis system by means of a vacuum pump and is flushed through the system with purified air. HTO is collected in a freeze trap at -80°C, and $^{14}CO_2$ is precipitated as barium carbonate with freshly prepared barium hydroxide in a bubbler. Water mist from the bubblers is then removed from the gas stream as the sample passes through a silica gel spray trap. The gas is then passed through the catalytic oxidation chamber, which converts the remaining gaseous hydrogen and carbon compounds to water and carbon dioxide. The water is collected in a second freeze trap, and the CO_2 is precipitated in a second bubbler. The water fractions are weighed and then rinsed with dioxane into plastic vials and counted by liquid scintillation. The barium carbonate precipitates are centrifuged, washed, and transferred to stainless steel plachets for weighing. The precipitates are then transferred to glass vials and counted by liquid scintillation as a suspension. Minimum detectable levels for both ^{3}H and ^{14}C are 0.4 picocuries per sample for samples varying in size from 1 cc to 20 liters.

17. KEY WORDS AND DOCUMENT ANALYSIS

a. DESCRIPTORS	b. IDENTIFIERS/OPEN ENDED TERMS	c. COSATI Field/Group
Carbon-14 Tritium Flue gases--combustion products		13-B

18. DISTRIBUTION STATEMENT RELEASE TO PUBLIC	19. SECURITY CLASS *(This Report)* UNCLASSIFIED	21. NO. OF PAGES 21
	20. SECURITY CLASS *(This page)* UNCLASSIFIED	22. PRICE

EPA Form 2220-1 (9-73)

U. S. GOVERNMENT PRINTING OFFICE: 1975-657-695/5327 Region No. 5-11

U.S. ENVIRONMENTAL PROTECTION AGENCY
Office of Research and Development
Technical Information Staff
Cincinnati, Ohio 45268

OFFICIAL BUSINESS
PENALTY FOR PRIVATE USE, $300
AN EQUAL OPPORTUNITY EMPLOYER

POSTAGE AND FEES PAID
U.S. ENVIRONMENTAL PROTECTION AGENCY
EPA-335

Special Fourth-Class Rate
Book

If your address is incorrect, please change on the above label; tear off; and return to the above address.
If you do not desire to continue receiving this technical report series, CHECK HERE ☐; tear off label, and return it to the above address.