United States
Environmental Protection
Agency

Enforcement And
Compliance Assurance
(2223A)

EPA 310-R-97-007
September 1997

EPA

Profile Of The Fossil Fuel Electric Power Generation Industry

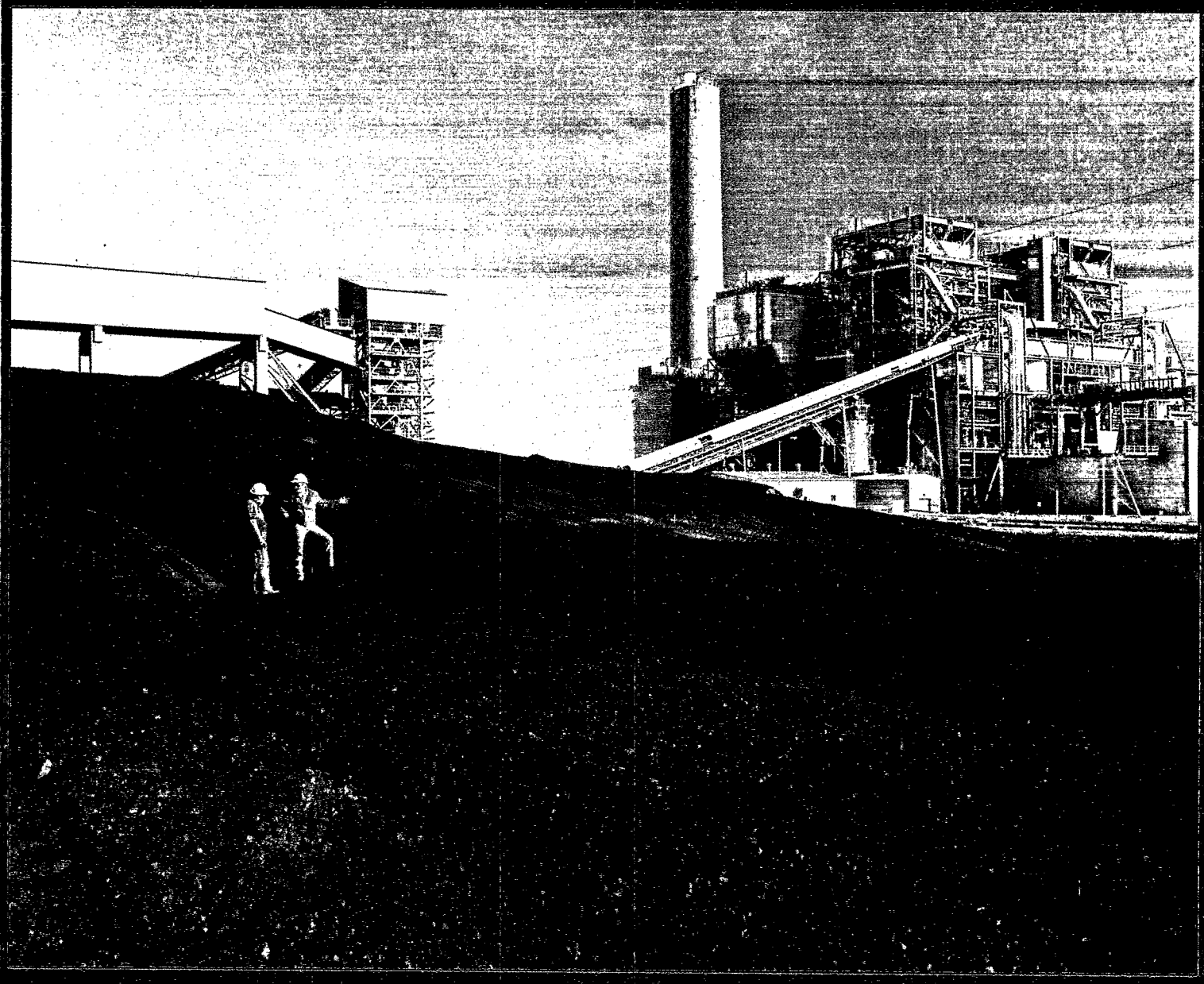

SECTOR EPA 25 NOTEBOOKS

EPA Office Of Compliance Sector Notebook Project

UNITED STATES ENVIRONMENTAL PROTECTION AGENCY
WASHINGTON, D.C. 20460

NOV 18 1997

THE ADMINISTRATOR

Message from the Administrator

Since EPA's founding over 25 years ago, our nation has made tremendous progress in protecting public health and our environment while promoting economic prosperity. Businesses as large as iron and steel plants and those as small as the dry cleaner on the corner have worked with EPA to find ways to operate cleaner, cheaper and smarter. As a result, we no longer have rivers catching fire. Our skies are clearer. American environmental technology and expertise are in demand around the world.

The Clinton Administration recognizes that to continue this progress, we must move beyond the pollutant-by-pollutant approaches of the past to comprehensive, facility-wide approaches for the future. Industry by industry and community by community, we must build a new generation of environmental protection.

The Environmental Protection Agency has undertaken its Sector Notebook Project to compile, for major industries, information about environmental problems and solutions, case studies and tips about complying with regulations. We called on industry leaders, state regulators, and EPA staff with many years of experience in these industries and with their unique environmental issues. Together with an extensive series covering other industries, the notebook you hold in your hand is the result.

These notebooks will help business managers to understand better their regulatory requirements, and learn more about how others in their industry have achieved regulatory compliance and the innovative methods some have found to prevent pollution in the first instance. These notebooks will give useful information to state regulatory agencies moving toward industry-based programs. Across EPA we will use this manual to better integrate our programs and improve our compliance assistance efforts.

I encourage you to use this notebook to evaluate and improve the way that we together achieve our important environmental protection goals. I am confident that these notebooks will help us to move forward in ensuring that -- in industry after industry, community after community -- environmental protection and economic prosperity go hand in hand.

Carol M. Browner

Recycled/Recyclable • Printed with Vegetable Oil Based Inks on 100% Recycled Paper (40% Postconsumer)

EPA/310-R-97-007

EPA Office of Compliance Sector Notebook Project

Profile of the Fossil Fuel Electric Power Generation Industry

September 1997

Office of Compliance
Office of Enforcement and Compliance Assurance
U.S. Environmental Protection Agency
401 M St., SW (MC 2223-A)
Washington, DC 20460

For sale by the U.S. Government Printing Office
Superintendent of Documents, Mail Stop: SSOP, Washington, DC 20402-9328
ISBN 0-16-049399-4

This report is one in a series of volumes published by the U.S. Environmental Protection Agency (EPA) to provide information of general interest regarding environmental issues associated with specific industrial sectors. The documents were developed under contract by Abt Associates (Cambridge, MA), Science Applications International Corporation (McLean, VA), and Booz-Allen & Hamilton, Inc. (McLean, VA). This publication may be purchased from the Superintendent of Documents, U.S. Government Printing Office. A listing of available Sector Notebooks and document numbers is included at the end of this document.

All telephone orders should be directed to:

Superintendent of Documents
U.S. Government Printing Office
Washington, DC 20402
(202) 512-1800
FAX (202) 512-2250
8:00 a.m. to 4:30 p.m., EST, M-F

Using the form provided at the end of this document, all mail orders should be directed to:

U.S. Government Printing Office
P.O. Box 371954
Pittsburgh, PA 15250-7954

Complimentary volumes are available to certain groups or subscribers, such as public and academic libraries, Federal, State, and local governments, and the media from EPA's National Center for Environmental Publications and Information at (800) 490-9198. For further information, and for answers to questions pertaining to these documents, please refer to the contact names and numbers provided within this volume.

Electronic versions of all Sector Notebooks are available via Internet on the Enviroene World Wide Web. Downloading procedures are described in Appendix A of this document.

Cover photograph courtesy of Arizona Electric Power Cooperative, Inc.

Sector Notebook Contacts

The Sector Notebooks were developed by the EPA's Office of Compliance. Questions relating to the Sector Notebook Project can be directed to:

Seth Heminway, Coordinator, Sector Notebook Project
US EPA Office of Compliance
401 M St., SW (2223-A)
Washington, DC 20460
(202) 564-7017

Questions and comments regarding the individual documents can be directed to the appropriate specialists listed below.

Document Number	Industry	Contact	Phone (202)
EPA/310-R-95-001.	Dry Cleaning Industry	Joyce Chandler	564-7073
EPA/310-R-95-002.	Electronics and Computer Industry	Steve Hoover	564-7007
EPA/310-R-95-003.	Wood Furniture and Fixtures Industry	Bob Marshall	564-7021
EPA/310-R-95-004.	Inorganic Chemical Industry	Walter DeRieux	564-7067
EPA/310-R-95-005.	Iron and Steel Industry	Maria Malave	564-7027
EPA/310-R-95-006.	Lumber and Wood Products Industry	Seth Heminway	564-7017
EPA/310-R-95-007.	Fabricated Metal Products Industry	Scott Throwe	564-7013
EPA/310-R-95-008.	Metal Mining Industry	Anthony Raia	564-6045
EPA/310-R-95-009.	Motor Vehicle Assembly Industry	Anthony Raia	564-6045
EPA/310-R-95-010.	Nonferrous Metals Industry	Jane Engert	564-5021
EPA/310-R-95-011.	Non-Fuel, Non-Metal Mining Industry	Anthony Raia	564-6045
EPA/310-R-95-012.	Organic Chemical Industry	Walter DeRieux	564-7067
EPA/310-R-95-013.	Petroleum Refining Industry	Tom Ripp	564-7003
EPA/310-R-95-014.	Printing Industry	Ginger Gotliffe	564-7072
EPA/310-R-95-015.	Pulp and Paper Industry	Maria Eisemann	564-7016
EPA/310-R-95-016.	Rubber and Plastic Industry	Maria Malave	564-7027
EPA/310-R-95-017.	Stone, Clay, Glass, and Concrete Ind.	Scott Throwe	564-7013
EPA/310-R-95-018.	Transportation Equip. Cleaning Ind.	Virginia Lathrop	564-7057
EPA/310-R-97-001.	Air Transportation Industry	Virginia Lathrop	564-7057
EPA/310-R-97-002.	Ground Transportation Industry	Virginia Lathrop	564-7057
EPA/310-R-97-003.	Water Transportation Industry	Virginia Lathrop	564-7057
EPA/310-R-97-004.	Metal Casting Industry	Jane Engert	564-5021
EPA/310-R-97-005.	Pharmaceuticals Industry	Emily Chow	564-7071
EPA/310-R-97-006.	Plastic Resin and Manmade Fiber Ind.	Sally Sasnett	564-7074
EPA/310-R-97-007.	Fossil Fuel Elec. Power Generation Ind.	Rafael Sanchez	564-7028
EPA/310-R-97-008.	Shipbuilding and Repair Industry	Anthony Raia	564-6045
EPA/310-R-97-009.	Textile Industry	Belinda Breidenbach	564-7022
EPA/310-R-97-010.	Sector Notebook Data Refresh, 1997	Seth Heminway	564-7017

[This page intentionally left blank.]

FOSSIL FUEL ELECTRIC POWER GENERATION INDUSTRY (SIC 4911, 493) TABLE OF CONTENTS

LIST OF TABLES iv

LIST OF FIGURES vi

LIST OF ABBREVIATIONS AND ACRONYMS vii

I. INTRODUCTION TO THE SECTOR NOTEBOOK PROJECT 1
- A. Summary of the Sector Notebook Project 1
- B. Additional Information 2

II. INTRODUCTION TO THE FOSSIL FUEL ELECTRIC POWER GENERATION INDUSTRY 3
- A. Introduction, Background, and Scope of the Notebook 3
- B. Characterization of the Fossil Fuel Electric Power Generation Industry 4
  - 1. Product Characterization 5
  - 2. Industry Size and Geographic Distribution of the Fossil Fuel Electric Power Generation Industry 5
  - 3. Industry Size and Geographic Distribution of Traditional Utilities 7
  - 4. Industry Size and Geographic Distribution of Nonutilities 13
  - 5. Economic Trends 19

III. INDUSTRIAL PROCESS DESCRIPTION 23
- A. Industrial Processes in the Fossil Fuel Electric Generation Industry 23
  - 1. Steam Turbine Generation 23
  - 2. Internal Combustion Generation 32
  - 3. Gas Turbine Generation 33
  - 4. Combined-Cycle Generation 34
  - 5. Cogeneration 35
  - 6. Supporting Operations 36
- B. Raw Material Inputs and Pollution Outputs 38
  - 1. Fossil Fuels and Other Raw Material Inputs 38
  - 2. Pollutant Outputs 40

IV. WASTE RELEASE PROFILE 47
A. Available Solid Waste Release Data for the Fossil Fuel Electric Power Generation Industry 47
B. Available Water Release Information for the Fossil Fuel Electric Power Generation Industry 51
C. Available Air Emissions Data for the Fossil Fuel Electric Power Generation Industry 53
1. Annual Emissions Estimated by the Department of Energy, Energy Information Administration 53
2. AIRS Database Annual Estimated Releases for the Electric Power Generation Industry 54
3. Hazardous Air Pollutant Emissions Estimates for Fossil Fuel Electric Utility Steam Generating Units 56

V. POLLUTION PREVENTION OPPORTUNITIES 71
A. Pollution Prevention Technologies in the DOE Clean Coal Technology Demonstration Program 72
1. Emerging Technologies 72
2. Coal Processing for Clean Fuels 76
B. Other Pollution Prevention Technologies 77
C. Other Pollution Prevention and Waste Minimization Opportunities 79
1. Process or Equipment Modification Options 79
2. Inventory Management and Preventative Maintenance for Waste Minimization 85
3. Potential Waste Segregation and Separation Options 86
4. Recycling Options 87
5. Facility Maintenance Wastes 89
6. Storm Water Management Practices 92
7. Training and Supervision Options 94
8. Demand-Side Management Programs 94

VI. SUMMARY OF APPLICABLE FEDERAL STATUTES AND REGULATIONS 95
A. General Description of Major Statutes 95
B. Industry-Specific Requirements 106
C. Pending and Proposed Regulatory Requirements 116

VII. COMPLIANCE AND ENFORCEMENT HISTORY 119
A. Fossil Fuel Electric Power Generation Industry Compliance History 123
B. Comparison of Enforcement Activity Between Selected Industries 125
C. Review of Major Legal Actions 130
1. Review of Major Cases 130
2. Supplemental Environmental Projects 131

VIII. COMPLIANCE ASSURANCE ACTIVITIES AND INITIATIVES 133
A. Sector-Related Environmental Programs and Activities 133
B. EPA Voluntary Programs 134
C. Trade Association/Industry Sponsored Activity 137
1. Environmental Programs 138
2. Summary of Trade Associations 138

IX. CONTACTS/ACKNOWLEDGMENTS/RESOURCE MATERIALS/ BIBLIOGRAPHY 143

APPENDIX A - INSTRUCTIONS FOR DOWNLOADING THIS NOTEBOOK A-1

LIST OF TABLES

Table 1: Comparison of Utility and Nonutility Electric Power Generation (1995) 6
Table 2: Revenues From Major Utility Generators (1995) 9
Table 3: Top Ten Investor-Owned Utilities Ranked by Revenue From Sales to Ultimate Consumers (1995) 9
Table 4: Top Ten Publicly Owned Generator Utilities Ranked by Megawatt Sales to Ultimate Consumers (1994) 10
Table 5: Existing Capacity of All U.S. Utilities by Prime Mover (fossil fuels, renewable fuels, and other fuels) (1995) 12
Table 6: Fossil-Fueled Utility Capacity by Prime Mover (1995) 12
Table 7: Utility Generating Capability and Net Generation by Energy Source (1995) . . . 13
Table 8: Major SIC Codes and Industrial Categories Where Nonutility Power Generation Activities Are Found 16
Table 9 : Existing Capacity of Nonutilities by Prime Mover (1995) 18
Table 10: Nonutility Capacity by Fossil Fuel Energy Source (1995) 18
Table 11: 1995 Nonutility Net Generation by Primary Fossil Fuel Energy Source and Type of Producer (thousand megawatthours) 19
Table 12: Characteristics of Various Types of Stokers 26
Table 13: Summary of Typical Waste Streams and Pollutants Generated at Fossil Fuel Electric Power Generation Facilities Based on Fuel Type 43
Table 14: Generation and Disposition of Utility Fly and Bottom Ash, 1994 (thousand short tons) 48
Table 15: Generation and Disposition of Utility FGD Sludge, 1994 (thousand short tons) 49
Table 16: Estimated Nonutility Generation of Coal Ash, 1990 50
Table 17: List of Pollutants Reported in 1992 PCS Data from Steam Electric Facilities . . 52
Table 18: Estimated 1995 Emissions From Fossil Fuel Steam Electric Generating Units at Electric Utilities by Fuel Type (thousand short tons) 53
Table 19: Criteria Pollutant Releases (short tons/year) 55
Table 20: Estimated Releases of TRI Chemicals 58
Table 21: Median Emission Factors Determined From Test Report Data, and Total 1990 and 2010 HAP Emissions, Projected With the Emission Factor Program for Inorganic HAPs From Coal-Fired Units 61
Table 22: Median Emission Factors Determined From Test Report Data, and Total 1990 and 2010 HAP Emissions, Projected With the Emission Factor Program for Inorganic HAPs From Oil-Fired Units 62
Table 23: Median Emission Factors Determined From Test Report Data, and Total 1990 and 2010 HAP Emissions, Projected With the Emission Factor Program for Inorganic HAPs From Gas-Fired Units 63
Table 24: Median Emission Factors From Test Report Data, and Total 1990 and 2010 HAP Emissions, Projected With the Emission Factor Program for Organic HAPs From Coal-Fired Units 64

Table 25: Median Emission Factors from Test Report Data, and Total 1990 and 2010 HAP Emissions, Projected with the Emission Factor Program for Organic HAPs from Oil Fired Units 68
Table 26: Median Emission Factors From Test Report Data, and Total 1990 and 2010 HAP Emissions, Projected With the Emission Factor Program for Organic HAPs From Gas-Fired Units 70
Table 27: Summaries of Clean Coal Technologies Under DOE's Clean Coal Technology Demonstration Program 73
Table 28: Pollution Prevention Opportunities for Reducing Cooling Tower Emissions . . . 81
Table 29: Pollution Prevention Options for Fireside Washes 82
Table 30: Pollution Prevention Options for Boiler Cleaning Wastes 85
Table 31: Inventory Management and Preventative Maintenance Waste Minimization Opportunities 87
Table 32: Current and Potential Uses for Fly Ash 88
Table 33: Pollution Prevention Opportunities For Facility Maintenance Wastes 91
Table 34: Common Pollution Prevention Practices for Managing Runoff at Coal Storage and Handling Areas 92
Table 35: Storm Water Pollution Prevention Opportunities at Fossil Fuel Electric Power Generation Facilities 93
Table 36: New Source Performance Standards 109
Table 37: Waste Streams and Pollutants Regulated Under National Effluent Limitation Guidelines for the Steam Electric Generating Point Source Category 113
Table 38: Five-Year Enforcement and Compliance Summary for the Fossil Fuel Electric Power Generation Industry 124
Table 39: One-Year Enforcement and Compliance Summary for Selected Industries . . . 126
Table 40: Five-Year Enforcement and Compliance Summary for Selected Industries . . . 127
Table 41: Five-Year Inspection and Enforcement Summary by Statute for Selected Industries 128
Table 42: One-Year Inspection and Enforcement Summary by Statute for Selected Industries 129
Table 43: List of Power Plants That Participated in the Environmental Leadership Program For 1995 and 1996 135

LIST OF FIGURES

Figure 1: Total Utility and Nonutility Electric Power Net Generation Based on Fuels (1995) . 7
Figure 2: Total Utility Electricity Sales to Ultimate Consumers 8
Figure 3: Geographic Distribution of U.S. Utility Electric Power Net Generation 11
Figure 4: Nonutility Capacity by Type of Producer 15
Figure 5: Geographic Distribution of U.S. Nonutility Electric Power Net Generation 17
Figure 6: Steam Turbine Generation 25
Figure 7: Stoker Coal Feeder 27
Figure 8: Typical Cyclone Coal Burners 28
Figure 9: Tangential Firing Pattern 29
Figure 10: Flow Pattern of Horizontal Firing 30
Figure 11: Flow Pattern of Arch Firing 31
Figure 12: Typical Bubbling Fluidized-Bed Boiler 32
Figure 13: Simple Gas Turbine Cycle 33
Figure 14: Combined Cycle with Heat Recovery 34
Figure 15: Cogeneration Plant Schematic 36
Figure 16: Waste Streams Generated at a Typical Fossil Fuel Electric Power Generation Plant 44

LIST OF ABBREVIATIONS AND ACRONYMS

ACAA	American Coal Ash Association
AEE	Association of Energy Engineers
AEPCO	Arizona Electric Power Cooperative
AFS	AIRS Facility Subsystem (CAA database)
AIRS	Aerometric Information Retrieval System (CAA database)
APPA	American Public Power Association
ANL	Argonne National Laboratory
BACT	Best Available Control Technology
BIFs	Boilers and Industrial Furnaces (RCRA)
BOD	Biochemical Oxygen Demand
BPJ	Best Professional Judgment
BTU	British Thermal Unit
CAA	Clean Air Act
CAAA	Clean Air Act Amendments of 1990
$CaCl_2$	Calcium Chloride
CAPI	Clean Air Power Initiative
CCGT	Combined-Cycle Gas Turbine
CCP	Coal Combustion Product
CCT	Clean Coal Technology Demonstration Project (DOE)
CERCLA	Comprehensive Environmental Response, Compensation, and Liability Act
CERCLIS	CERCLA Information System
CEQ	Council for Environmental Quality
CFC	Chlorofluorocarbon
CHIEFs	Clearing House of Inventory Emissions Factors
CO	Carbon Monoxide
CO_2	Carbon Dioxide
COD	Chemical Oxygen Demand
CP&L	Carolina Power and Light
CSI	Common Sense Initiative
CWA	Clean Water Act
D&B	Dun and Bradstreet Marketing Index
DOE	Department of Energy
DSA	Dimensionally stable
DSM	Demand Side Management
EA	Environmental Assessment
EDS	Effluent Data Statistics System
EEI	Edison Electric Institute
EIA	Energy Information Administration (DOE)
EIS	Environmental Impact Statement
ELP	Environmental Leadership Program
EMS	Environmental Management System

EPA	U.S. Environmental Protection Agency
EPACT	Energy Policy Act of 1992
EPCRA	Emergency Planning and Community Right-to-Know Act
EPRI	Electric Power Research Institute
EPSA	Electric Power Supply Association
EWG	Exempt Wholesale Generators
FAC	Free Available Chlorine
FBC	Fluidized Bed Combustion
FERC	Federal Energy Regulatory Commission
FGD	Flue Gas Desulfurization
FIFRA	Federal Insecticide, Fungicide, and Rodenticide Act
FINDS	Facility Indexing System
FONSI	Finding of No Significant Impact
HAPs	Hazardous Air Pollutants (CAA)
HCFC	Hydrochloroflourocarbon
HSDB	Hazardous Substances Data Bank
HSWA	Hazardous and Solid Waste Amendments of 1984
IDEA	Integrated Data for Enforcement Analysis
ICCR	Industrial Combustion Coordinated Rulemaking
IGCC	Integrated Coal Gasification Combined-cycle
IPP	Independent Power Producer
KW	Kilowatt
LAER	Lowest Achievable Emissions Rate
LDR	Land Disposal Restrictions (RCRA)
LEPC	Local Emergency Planning Committee
MACT	Maximum Achievable Control Technology (CAA)
MCL	Maximum Contaminant Level
MCLG	Maximum Contaminant Level Goal
MEK	Methyl Ethyl Ketone
MSDS	Material Safety Data Sheet
MW	Megawatt
NAAQS	National Ambient Air Quality Standards (CAA)
NAFCOG	North American Fuel Cell Owner Group
NAFTA	North American Free Trade Agreement
NAICS	North American Industry Classification System
NCDB	National Compliance Database (for TSCA, FIFRA, EPCRA)
NCP	National Oil and Hazardous Substances Pollution Contingency Plan
NEPA	National Environmental Policy Act
NERC	North American Reliability Council
NEIC	National Enforcement Investigation Center
NESHAP	National Emission Standards for Hazardous Air Pollutants
NGFC	Natural Gas Fuel Cell
NMHC	Non-Methane Hydrocarbon
NO_2	Nitrogen Dioxide
NOV	Notice of Violation

NO_X	Nitrogen Oxide
NPDES	National Pollutant Discharge Elimination System (CWA)
NPL	National Priorities List
NRECA	National Rural Electric Cooperative Association
NRC	National Response Center
NSR	New Source Review
NSPS	New Source Performance Standards (CAA)
OAR	Office of Air and Radiation
OAQPS	Office of Air Quality Planning and Standards
OECA	Office of Enforcement and Compliance Assurance
OIT	Office of Industrial Technology (DOE)
OPA	Oil Pollution Act
OPPTS	Office of Prevention, Pesticides, and Toxic Substances
OSHA	Occupational Safety and Health Administration
OSW	Office of Solid Waste
OSWER	Office of Solid Waste and Emergency Response
OTAG	Ozone Transport Assessment Group
OW	Office of Water
P2	Pollution Prevention
PAH	Polycyclic Aromatic Hydrocarbon
Pb	Lead
PCB	Polychlorinated Biphenyl
PCS	Permit Compliance System (CWA Database)
PEPCO	Potomac Electric Power Company
PETC	Pittsburgh Energy Technology Center
PM	Particulate Matter
PMN	Premanufacture Notice
POTW	Publicly Owned Treatment Works
PSD	Prevention of Significant Deterioration (CAA)
PSES	Pretreatment Standards for Existing Sources
PSNS	Pretreatment Standards for New Sources
PSE&G	Public Service Electric and Gas
PT	Total Particulate Emissions
PUHCA	Public Utility Holding Company Act
PURPA	Public Utility Regulatory Policies Act
QF	Qualifying Facility (PURPA)
RACT	Reasonably Achievable Control Technology
RCRA	Resource Conservation and Recovery Act
RCRIS	RCRA Information System
RDF	Refuse Derived Fuel
SARA	Superfund Amendments and Reauthorization Act
SDWA	Safe Drinking Water Act
SEP	Supplementary Environmental Project
SERC	State Emergency Response Commission
SIC	Standard Industrial Classification

SIP	State Implementation Plan (CAA)
SO_2	Sulfur Dioxide
SO_X	Sulfur Oxides
TCRIS	Toxic Chemical Release Inventory System
TDSS	Total Dissolved Suspended Solids
TOC	Total Organic Carbon
TRC	Total Residual Chlorine
TRI	Toxic Release Inventory
TRIS	Toxic Release Inventory System
TSCA	Toxic Substances Control Act
TSDF	Treatment, Storage, or Disposal Facility (RCRA)
TSS	Total Suspended Solids
UARG	Utility Air Regulatory Group
UIC	Underground Injection Control (SDWA)
UST	Underground Storage Tanks (RCRA)
USWAG	Utility Solid Waste Activities Group
UWAG	Utility Water Act Group
VOC	Volatile Organic Compound

FOSSIL FUEL ELECTRIC POWER GENERATION INDUSTRY (SIC 4911, 493)

I. INTRODUCTION TO THE SECTOR NOTEBOOK PROJECT

I.A. Summary of the Sector Notebook Project

Integrated environmental policies based upon comprehensive analysis of air, water, and land pollution are a logical supplement to traditional single-media approaches to environmental protection. Environmental regulatory agencies are beginning to embrace comprehensive, multi-statute solutions to facility permitting, enforcement and compliance assurance, education/outreach, research, and regulatory development issues. The central concepts driving the new policy direction are that pollutant releases to each environmental medium (i.e., air, water, and land) affect each other and that environmental strategies must actively identify and address these inter-relationships by designing policies for the "whole" facility. One way to achieve a whole facility focus is to design environmental policies for similar industrial facilities. By doing so, environmental concerns that are common to the manufacturing of similar products can be addressed in a comprehensive manner. Recognition of the need to develop the industrial "sector-based" approach within the U.S. Environmental Protection Agency (EPA) Office of Compliance led to the creation of this document.

The Sector Notebook Project was originally initiated by the Office of Compliance within the Office of Enforcement and Compliance Assurance (OECA) to provide its staff and managers with summary information for 18 specific industrial sectors. As other EPA offices, states, the regulated community, environmental groups, and the public became interested in this project, the scope of the original project was expanded to its current form. The ability to design comprehensive, common sense environmental protection measures for specific industries depends on knowledge of several interrelated topics. For the purposes of this project, the key elements chosen for inclusion are general industry information (economic and geographic); a description of industrial processes; pollution outputs; pollution prevention opportunities; Federal statutory and regulatory framework; compliance history; and a description of partnerships that have been formed between regulatory agencies, the regulated community, and the public.

For any given industry, each topic listed above could alone be the subject of a lengthy volume. However, in order to produce a manageable document, however, this project focuses on providing summary information for each topic. This format provides the reader with a synopsis of each issue and references where more in-depth information is available. Text within each profile was researched from a variety of sources and was usually condensed

from more detailed sources pertaining to specific topics. This approach allows for a wide coverage of activities that can be further explored based upon the citations and references listed at the end of this profile. To check the information included, each notebook went through an external review process. The Office of Compliance appreciates the efforts of all those who participated in this process who enabled the development of more complete, accurate, and up-to-date summaries. Many of those who reviewed this notebook are listed as contacts in Section IX and may be sources of additional information. The individuals and groups on this list do not necessarily concur with all statements within this notebook.

I.B. Additional Information

Providing Comments

The OECA Office of Compliance plans to periodically review and update the notebooks and will make these updates available both in hard copy and electronically. If you have any comments on the existing notebook, or if you would like to provide additional information, please send a hard copy and computer disk to the EPA Office of Compliance, Sector Notebook Project (2223-A), 401 M Street, SW, Washington, DC 20460. Comments can also be uploaded to the Enviroene World Wide Web for general access to all users of the system. Follow instructions in Appendix A for accessing this system. Once you have logged in, procedures for uploading text are available from the on-line Enviroene Help System.

Adapting Notebooks to Particular Needs

The scope of the industry sector described in this notebook approximates the national occurrence of facility types within the sector. In many instances, industries within specific geographic regions or states may have unique characteristics that are not fully captured in these profiles. The Office of Compliance encourages state and local environmental agencies and other groups to supplement or repackage the information included in this notebook to include more specific industrial and regulatory information that may be available. Additionally, interested states may want to supplement the "Summary of Applicable Federal Statutes and Regulations" section with state and local requirements. Compliance or technical assistance providers may also want to develop the "Pollution Prevention" section in more detail. Please contact the appropriate specialist listed on the opening page of this notebook if your office is interested in assisting us in further development of the information or policies addressed within this volume. If you are interested in assisting in the development of new notebooks for sectors not covered in the original 18, please contact the Office of Compliance at (202) 564-2395.

II. INTRODUCTION TO THE FOSSIL FUEL ELECTRIC POWER GENERATION INDUSTRY

This Sector Notebook addresses the fossil fuel electric power generation industry, which comprises the majority of the total electric power generation industry. This subset of the industry includes only facilities that use either coal, petroleum, or gas as the energy source to generate electricity and does not include facilities that use nuclear or renewable (e.g., wood, solar) energy sources exclusively. However, this subset would include power generation activities at facilities that use both fossil fuels and another energy source. In addition, the scope of this profile is further limited to address only those facilities that generate electricity either as a primary activity or as an ancillary activity. The profile does not include facilities and activities associated with the transmission and distribution of electricity.

II.A Introduction, Background, and Scope of the Notebook

Fossil fuel electric power generation facilities are classified under Standard Industrial Classification (SIC) code 49, which includes establishments engaged in electric, gas, and sanitary services. These facilities can be further classified under the following three- and four-digit SIC codes from the *Standard Industrial Classification (SIC) Manual* of the Office of Management and Budget.

- **SIC 4911 - Electric Services**: Establishments that are engaged in the generation, transmission, and/or distribution of electric energy for sale.

- **SIC 493 - Combination Electric and Gas, and Other Utility Services**: Establishments providing electric or gas services in combination with other services. Establishments are classified here only if one service does not constitute at least 95 percent of revenues.

It should be noted that these SIC codes do not make the necessary distinctions between fuels used and generation versus transmission and distribution activities. Data available to characterize the fossil fuel electric power generation industry that use these SIC codes also may not distinguish between these categories of facilities. Where these categories of facilities and/or activities cannot be distinguished in the available data, it will be so noted within the profile.

Fossil fuel electric power generation facilities are also classified under a new system called the North American Industry Classification System (NAICS), which replaced the existing SIC codes in January 1997. The NAICS classification code for fossil fuel electric power generation is 221112.

Power generation facilities and activities exist in association with both traditional utilities or nonutility power producers. Traditional utilities are the regulated industry that produces and provides electricity for public use. Prior to 1980, nonutilities consisted of industrial manufacturers that produced electricity for their own use. Currently, nonutilities not only consist of industrial manufacturers, but also other industrial groups that provide electricity and other services for their own use and/or for sale to others. These categories are discussed further below.

This section provides background information on the size, geographic distribution, electricity production, sales, and economic condition of the fossil fuel electric power generation industry. The type of facilities described within the document are also described in terms of their SIC codes. Additionally, this section lists the largest companies in terms of sales.

II.B Characterization of the Fossil Fuel Electric Power Generation Industry

The U.S. Department of Energy's (DOE) Energy Information Administration (EIA) collects, evaluates, and disseminates information on the fossil fuel electric power generation industry. This information is published annually. In addition, industry trade associations collect information.

Available statistics on the fossil fuel electric power generation industry typically characterize the industry in terms of capacity, generating capability, net generation, and revenues. These terms are defined as follows:

- **Capacity** is the amount of electric power delivered or required for which a generator, turbine, or system has been rated by the manufacturer.

- **Capability** is the maximum load that a generating unit can be expected to carry under specified conditions for a given period of time without exceeding approved limits of temperature or stress. The net capability of a generating unit is always less than the rated capacity.

- **Net generation** is the total amount of electricity generated minus the electricity used by the facility itself.

- **Revenue** is the total amount of money received by a firm from sales of its products and/or services, gains from the sales or exchange assets, interest and dividends earned on investments, and other increases in the owner's equity except those arising from capital adjustments.

The following sections briefly summarize information available to characterize the industry.

II.B.1 Product Characterization

The product in fossil fuel electric power generation is electricity. Ancillary activities associated with the generation of electricity may generate other products, however. For example, cogeneration systems produce electricity, as well as another form of usable energy (i.e., steam or heat). In addition, utilities with SIC code 493 may produce other products, such as gas. These other products are beyond the scope of this profile.

II.B.2 Industry Size and Geographic Distribution of the Fossil Fuel Electric Power Generation Industry

In general, the power generation industry comprises both traditional and nontraditional electric-producing companies. They are called "utility" and "nonutility" power producers, respectively. A key difference between utilities and nonutilities is that utilities own generation, transmission, and distribution functions. Thus, utilities are "vertically" oriented. Nonutilities, on the other hand, generally own only generation capabilities. Often, the nonutilities must rely on utilities to sell the electricity they produce.

A utility power producer is generally defined as any person, corporation, municipality, State political subdivision or agency, irrigation project, Federal power administration, or other legal entity that is primarily engaged in the retail or wholesale sale, exchange, and/or transmission of electric energy. In 1995, there were 3,199 utilities in the United States; however, only 700 of these utilities generated electric power. The remainder were electric utilities that purchased wholesale power from others for the purpose of distribution over their lines to the ultimate consumer. The 700 utilities that generated power had a total of 3,094 power plants or stations.[1]

A nonutility power producer is defined as any person, corporation, municipality, State political subdivision or agency, Federal agency, or other legal entity that either (1) produces electric energy at a qualifying facility (QF)[a] as defined under the Public Utility Regulatory Policies Act (PURPA) or (2) produces electric energy but is primarily engaged in business activities other than the sale of electricity. In 1995, there were 4,190 nonutility power-generating facilities. Generation by nonutility power producers accounted for approximately 12 percent of the total U.S. electric generation. Fifty-six percent of the electricity generated by nonutilities was sold to electric utilities.[2]

---

[a] To receive status as a QF under PURPA, a facility must meet certain ownership, thermal output size, and efficiency criteria established by the Federal Energy Regulatory Commission (FERC). QFs are guaranteed that electric utilities will purchase their output at a reasonable price.

Table 1 provides electric power generation statistics for the year 1995 that allows comparison between electric power generation by both utilities and nonutilities based on the fuels used.

Table 1: Comparison of Utility and Nonutility Electric Power Generation (1995)

Energy Source	Utility Generation (thousand megawatthours)	Nonutility Generation (thousand megawatthours)***	Total U.S. Generation (thousand megawatthours)***
Fossil	2,021,064	287,696	2,308,760
Nuclear	673,402	—(†)	673,402
Hydroelectric*	293,653	14,515	308,168
Renewable and other**	6,409	98,295	104,704
Total	**2,994,528**	**400,505**	**3,395,033**

* Includes hydroelectric, conventional, and pumped storage.
** Includes geothermal, solar, waste, wind, photovoltaic, and biomass; projects for which there were two primary energy sources; and projects that did not identify the primary energy source. Nonutility data includes nuclear.
*** Totals may not equal sum of components because of independent rounding.
† Nonutility facilities using nuclear are including under "Renewable and other."

Sources: (a) *Electric Power Annual, 1995, Volume 1.* U.S. Department of Energy, Energy Information Administration, Washington, DC. July 1996. DOE/EIA-0348(95/1); and (b) *1995 Capacity and Generation of Non-Utility Sources of Energy.* Prepared by the Edison Electric Institute, Washington, DC. November 1996.

Based on these numbers and as shown in Figure 1, fossil fuel electric power generation represented 68 percent of the total U.S. electric power generation industry's total production of electricity in that year (both utility and nonutility combined). Nuclear energy represented 20 percent, renewable energy sources represented about 12 percent, and other energy sources represented less than 1 percent of the electricity production.

Figure 1: Total Utility and Nonutility Electric Power Net Generation Based on Fuels (1995)

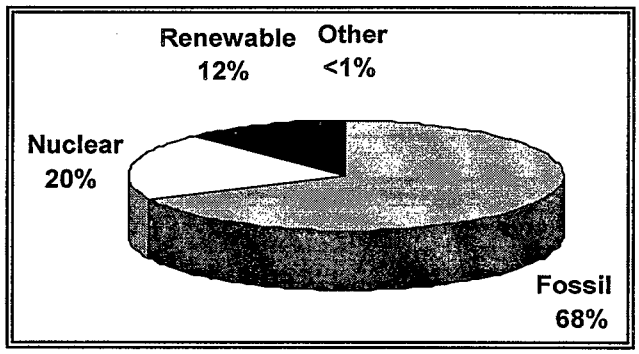

In general, statistics on utility and nonutility electric power production are not aggregated. The following sections provide a more in-depth discussion of the information available to characterize the utility and nonutility electric power generators.

II.B.3 Industry Size and Geographic Distribution of Traditional Utilities

Ownership Categories and Revenues

Electric utilities are divided into four ownership categories: investor-owned, publicly owned, cooperative-owned, and Federally owned. These categories are described as follows:

- **Investor-owned utilities** produce a return for investors. They either distribute profits to stockholders as dividends or reinvest the profits. Investor-owned utilities are regulated entities that are granted a service monopoly in certain geographic areas and are obliged to serve all consumers and charge reasonable prices.

- **Publicly-owned utilities** are non-profit local government agencies (e.g., municipalities, counties, States, and public utility districts) that serve communities and nearby consumers at cost, returning excess funds to the consumer in the form of community contributions, economic and efficient facilities, and lower rates.

- **Cooperative utilities** are owned by their members and are established to provide electricity to those members. Cooperatives typically provide electric service to small rural communities of 1,500 or less.

- **Federal electrical utilities** do not generate power for profit. The Federal government is primarily a producer and wholesaler of electricity, and

preference in the purchase of the electricity is given to publicly owned and cooperative electric utilities.

In 1995, there were 244 investor-owned, 2,014 publicly owned, 10 Federal, and 931 cooperative utilities. Figure 2 shows the percentage of 1995 U.S. electricity sales to ultimate consumers based on ownership type. Total sales were 1,013 billion kilowatthours. Only a portion of these utilities own and/or operate fossil fuel electric power generation capacity.

Figure 2: Total Utility Electricity Sales to Ultimate Consumers [3]

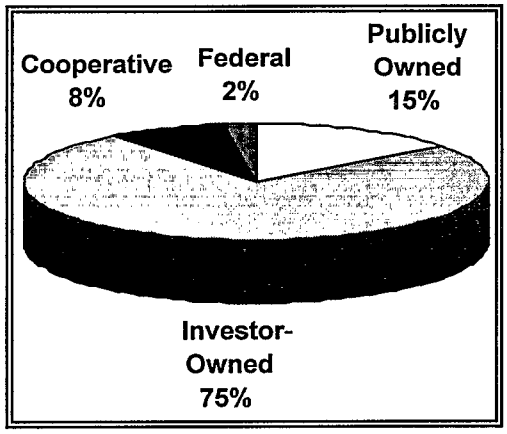

Among the ownership classes, investor-owned utilities account for more than 75 percent of all retail sales and revenues. In 1995, revenues from major utility generators totaled 208 billion dollars. Table 2 provides the revenues from major utility generators based on ownership category. Tables 3 and 4 list the 1995 top ten investor-owned and publicly owned utilities based on revenues from sales and megawatts sales to ultimate consumers, respectively. It should be noted that these data are for all electric utility activities, not just those that generate electricity.

Table 2: Revenues From Major Utility Generators (1995)

Ownership Category	Revenue (billion $)
Investor-Owned	164
Publicly Owned	26
Cooperative	17
Federal	1
Total	**208**

Source: *Electric Power Annual 1995, Volume II.* U.S. Department of Energy, Energy Information Administration, Washington, DC. July 1996. DOE/EIA-0384(95)/2.

Table 3: Top Ten Investor-Owned Utilities Ranked by Revenue From Sales to Ultimate Consumers (1995)

Utility Name	Revenue (thousand dollars)	% of Total
Southern California Edison Co.	7,575,448	4.64
Pacific Gas and Electric Co.	7,569,507	4.63
Commonwealth Edison Co.	6,634,832	4.06
Texas Utilities Electric Co.	5,450,444	3.34
Florida Power & Light Co.	5,325,258	3.26
Consolidated Edison Co. - NY, Inc.	5,005,860	3.07
Virginia Electric & Power Co.	3,979,071	2.44
Georgia Power Co.	3,972,189	2.43
Public Service Electric & Gas	3,886,566	2.38
Duke Power Co.	3,843,227	2.35
Subtotal	**53,242,403**	**32.61**

Source: *Financial Statistics of Major U.S. Investor-Owned Electric Utilities - 1995.* U.S. Department of Energy, Energy Information Administration, Washington, DC. December 1996. DOE/EIA-0437/(95)/1.

Table 4: Top Ten Publicly Owned Generator Utilities Ranked by Megawatt Sales to Ultimate Consumers (1994)

Utility Name	Megawatt Sales	% of Total
City of Los Angeles (CA)	20,430,075	8.61
Salt River Project (AZ)	16,058,298	6.77
Power Authority of State of NY	13,212,615	5.57
San Antonio Public Service Board (TX)	13,027,064	5.49
City of Seattle (WA)	8,874,039	3.74
Jacksonville Electric Authority (FL)	8,817,618	3.72
Sacramento Municipal Utility District (CA)	8,458,156	3.57
South Carolina Public Service Authority	7,423,460	3.13
City of Austin (TX)	7,308,134	3.08
Omaha Public Power District (NE)	7,066,940	2.98
Subtotal	**110,676,399**	**46.65**

Source: *Financial Statistics of Major U.S. Publicly-Owned Electric Utilities - 1994.* U.S. Department of Energy, Energy Information Administration, Washington, DC. December 1995. DOE/EIA-0437/(94)/2.

Geographic Distribution of Utilities

Fossil fuel electric power generation by utilities occurs across the United States. Figure 3 provides the total electric power net generation for each State. Higher values for net generation from utilities generally mirror higher population densities and industrial centers. The States with the highest utility net generation included were California, Texas, Illinois, Ohio, Pennsylvania, and Florida. The amount and geographical distribution of capacity by energy source are a function of availability and price of fuels and/or regulations. Energy sources used by utilities generally show a geographical pattern, such as significant coal and petroleum-fired capacity in the East and gas-fired capacity in the Coastal South.[4]

Figure 3: Geographic Distribution of U.S. Utility Electric Power Net Generation

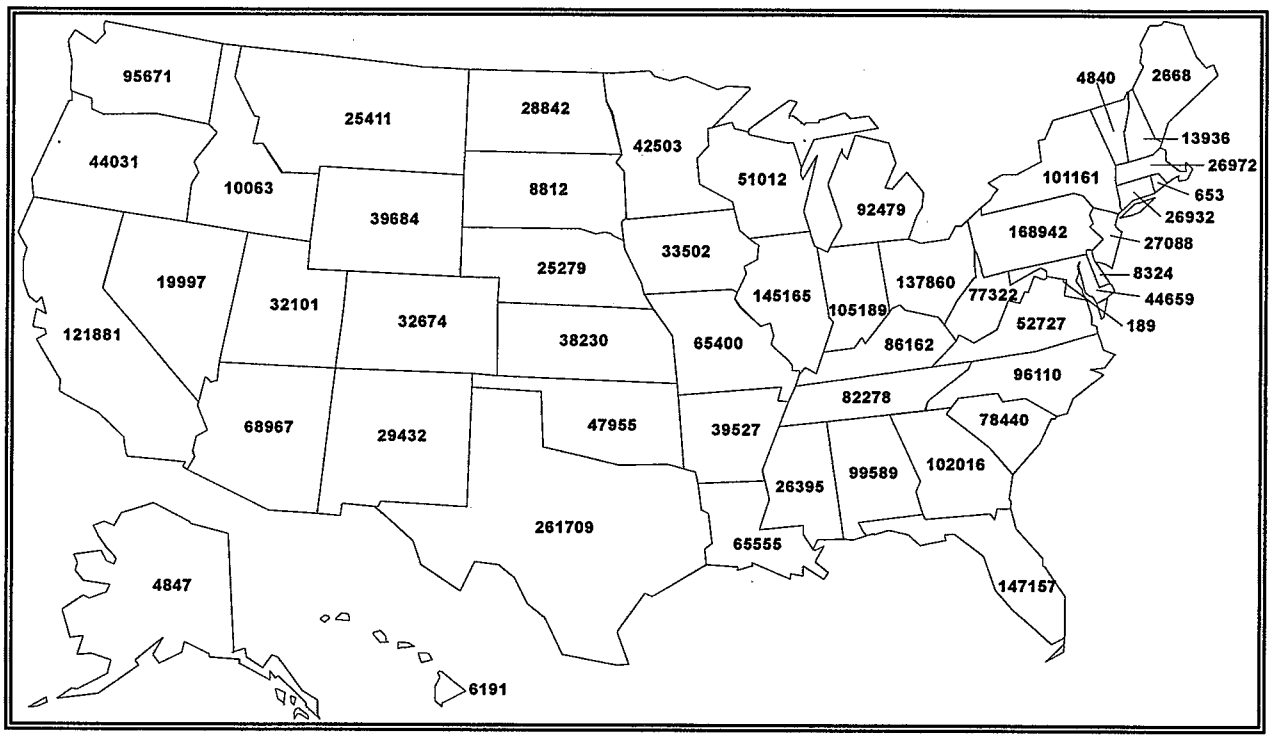

Source: *Electric Power Annual, 1995, Volume I and II.* U.S. Department of Energy, Energy Information Administration, Washington, DC. July 1996. DOE/EIA-0348(95)/1&2.

Existing Utility Capacity and Electricity Generation

In general, electric power generation utilities use several technologies to generate electric power. These technologies, known as prime movers, are steam turbines, gas turbines, internal combustion engines, combined-cycle, hydraulic turbines, and others (e.g., geothermal, solar, and wind). Combined-cycle facilities use a technology in which electricity is produced from otherwise lost heat exiting from one or more gas (combustion) turbines. The exiting heat is routed to a conventional boiler or to a heat recovery steam generator for utilization by a steam turbine in the production of electricity. This process increases the efficiency of the generating unit. Table 5 shows the 1995 existing capacity that employs these technologies and the percent of total U.S. utility capacity. Steam turbines are associated with 77 percent of the total U.S. utility capacity.

Table 5: Existing Capacity of All U.S. Utilities by Prime Mover (fossil fuels, renewable fuels, and other fuels) (1995)		
Prime Mover	**Generating Capacity (megawatts)****	**Percent of Total U.S. Capacity**
Steam Turbines*	579,647	77
Gas Turbines	58,329	7
Internal Combustion	4,985	>1
Combined-Cycle (gas and steam)	14,578	2
Hydraulic Turbines (hydroelectric)	91,114	12
Others	1,888	>1
Total	**750,542**	**100**

* Includes nuclear generators.
** Total may not equal sum of components because of independent rounding.

Source: *Inventory of Power Plants in the United States, as of January 1, 1996.* U.S. Department of Energy, Energy Information Administration, Washington, DC. December 1996. DOE/EIA-0095(95).

Not all of the existing capacity uses fossil fuels. Only a subsection of steam turbine, gas turbine, internal combustion, and combined-cycle capacity (657,539 megawatts) uses fossil fuels. More than 75 percent of the total existing capacity is fossil-fueled. Table 6 presents the 1995 capacity that used fossil fuels for each prime mover. In 1995, approximately 86 percent of the fossil-fueled electric power generation capacity was from steam turbine systems.

Table 6: Fossil-Fueled Utility Capacity by Prime Mover (1995)*		
Prime Mover	**Generating Capacity (megawatts)**	**% of Fossil-Fueled Capacity**
Steam Turbine	475,860	86
Gas Turbine/Internal Combustion	73,166	14
Total	**549,026**	**100**

* Includes combined-cycle capacity.

Source: *Inventory of Power Plants in the United States, As of January 1, 1996.* U.S. Department of Energy, Energy Information Administration, Washington, DC. December 1996. DOE/EIA-0095(95).

Fossil fuel-fired steam electric utilities had the capability to produce 445,627 megawatts of electricity, or more than 50 percent of the net generating capability at U.S. electric utilities. Gas turbine and internal combustion

facilities combined had the capability to produce 61,424 megawatts of electricity, or 11.5 percent of generating capability at U.S. electric utilities in 1995.

In 1995, coal was used as the energy source to generate the most electricity in the utility industry, accounting for net generation of 1,652,914 thousand megawatthours of electricity, consuming 829,007 thousand short tons of coal. Gas-fired generators generated 307,306 thousand megawatthours, consuming 3,196,507 million cubic feet of gas, and petroleum-fired generators generated 60,844 thousand megawatthours of electricity, consuming 102,150 thousand barrels of petroleum (not including petroleum coke). Many utility generators have the flexibility to switch fuel sources in response to market conditions. Table 7 provides the 1995 U.S. utility generating capacity and net generation for each fossil fuel energy source.

Table 7: Utility Generating Capability and Net Generation by Energy Source (1995)

Energy Source	Generating Capability (megawatts)	Net Generation (thousand megawatthours)
Coal	301,484	1,652,914
Gas	135,749	307,306
Petroleum	70,043	60,844
Total	**507, 276**	**2,020,822**

Source: *Electric Power Annual, 1995, Volume 1.* U.S. Department of Energy, Energy Information Administration, Washington, DC. July 1996. DOE/EIA-0348(95/1).

II.B.4 Industry Size and Geographic Distribution of Nonutilities

Nonutility Classifications

There are three categories of nonutilities:

- **Cogeneration** is the major technology used among nonutility power producers. This technology, which is discussed in greater detail in Section III, is the combined production of electric power and another form of useful energy (e.g., heat or steam). To receive QF status under PURPA, a cogeneration facility must meet certain operating criteria to "produce electrical energy and another form of useful thermal energy through the sequential use of energy." Depending upon the technology used, a facility may also be required to meet specific efficiency criteria. QFs are guaranteed that electric utilities will purchase their output at the incremental cost that an electric utility would incur to produce or purchase an amount of power equivalent to that purchased from QFs.

QFs are also guaranteed that electric utilities will provide backup service at prevailing (non-discriminatory) rates.

Fossil-fueled steam turbine systems are used in most industrial applications of cogenerating processes, while gas turbine systems are used in most other processes (e.g., commercial). Diesel engine systems are limited in their application to cogeneration because they provide less useable process heat per unit of electric power input.

- **Small Power Producers** are designated under PURPA regulations based on fuel consumption of a renewable energy source greater than 75 percent. This means that most nonutility fossil fuel electric power generators are not likely to carry this designation. In limited cases however, a facility may use fossil fuel in conjunction with a renewable energy source.

- **Other Nonutility Generators** are facilities not classified in the previous categories that produce electric power for their own use and for sale to electric utilities. These facilities include:

  - Independent power producers (IPPs)
  - Nonqualifying cogenerators
  - Exempt wholesale generators (EWGs)
  - Other commercial and industrial establishments.

FERC defines IPPs as producers of electric power other than QFs that are unaffiliated with franchised utilities in the IPP's market area and that for other reasons lack significant market power. The IPPs may lack market power due to siting or access to transmission. The EWGs are engaged exclusively in the business of wholesale electric generation and are exempt from corporate organizational restrictions under the Public Utility Holding Company Act of 1935.

In 1995, the makeup of the nonutility industry, based on capacity, included 76.2 percent cogenerators, 15.8 percent small power producers, and 8 percent other nonutility producers. Figure 4 illustrates the percent capacity of the different classes of nonutility power producers.[5]

Figure 4: Nonutility Capacity by Type of Producer

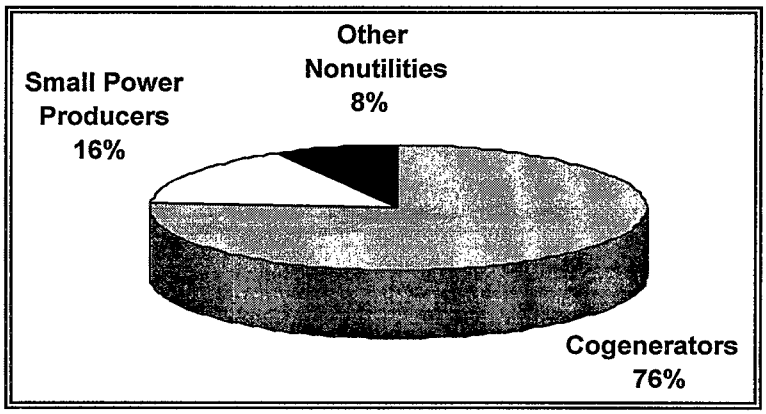

Qualified facilities comprised 78 percent of the total nonutility capacity in 1995. Non-qualified facilities were 12.9 percent of the capacity.

Nonutility power generation facilities and activities may be found in association with commercial and industrial facilities. Table 8 lists SIC codes and industries where power generation facilities and activities may be found.

In 1995, nonutility generation capacity within the chemical industry (SIC Code 28) accounted for 21 percent of the nonutility capacity and 23 percent of the total nonutility generation. The paper industry (SIC Code 26) accounted for 17 percent of the nonutility capacity and 18 percent of the generation. The coal, oil, and gas mining and refining industries (SIC Codes 12, 13, and 29) accounted for 12 percent of the total nonutility capacity and 13 percent of the generation.[6]

Table 8: Major SIC Codes and Industrial Categories Where Nonutility Power Generation Activities Are Found

Major SIC Code	Industrial Category
01, 02	Agricultural Production - Crops, Livestock, and Animals
07	Agricultural Services
10	Metal Mining
12	Coal Mining
13	Oil and Gas Extraction
20	Food and Kindred Products
21	Tobacco Products
22	Textile Mill Products
23	Apparel & Other Finished Fabric Products
24	Lumber and Wood Products (Except Furniture)
25	Furniture and Fixtures
26	Paper and Allied Products
27	Printing, Publishing, and Allied Industries
28	Chemicals and Allied Products
29	Petroleum Refining and Related Industries
30	Rubber and Miscellaneous Plastics Products
31	Leather and Leather Products
32	Stone, Clay, Glass, and Concrete Products
33	Primary Metal Industries
34	Fabricated Metal Products (Except Machinery)
35	Industrial and Commercial Machinery/Computer Equipment
36	Electronic and Other Electrical Equipment
37	Transportation Equipment
38	Measuring, Analyzing, and Controlling Instruments
39	Jewelry, Silverware, and Plated Silver
42, 45, 47, 48, 49	Transportation, Communications , Electric, Gas, and Sanitary Services
53, 54, 55, 58	Retail Trade
60, 65	Finance, Insurance, and Real Estate
70, 72, 80, 82, 83, 84, 86, 87	Services
91, 92, 97	Public Administration

Source: *Directory of U.S. Cogeneration, Small Power, and Industrial Power Plants.* June 1995.. Giles, Ellen and Fred Yost. Twelfth Edition. Utility Data Institute, A Division of McGraw- Hill Company. UDI-2018-95.

Geographic Distribution of Nonutilities

Fossil fuel electric power generation by nonutilities occurs all across the United States. Figure 5 provides the total nonutility electric power net generation for each State. As with the utilities, higher values for net generation for nonutilities generally mirror higher population densities and industrial centers. The States with the highest nonutility net generation included were California, Texas, Virginia, New York, Florida, and New Jersey.

Figure 5: Geographic Distribution of U.S. Nonutility Electric Power Net Generation

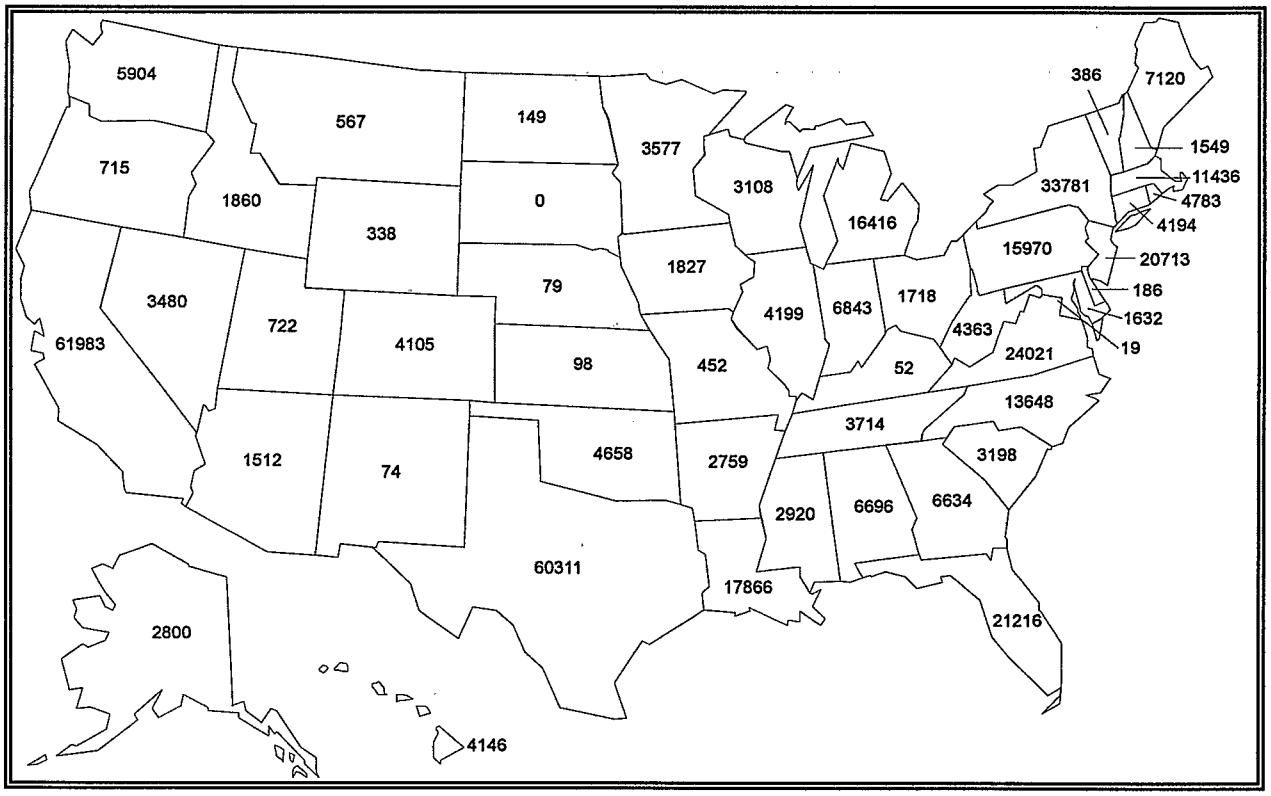

Source: *Electric Power Annual Volume I and II.* July 1995. U.S. Department of Energy, Energy Information Administration, Washington, DC. DOE/EIA-0348(95)/1&2.

Existing Nonutility Capacity and Electricity Generation

As in the traditional utilities, nonutilities use steam turbines, gas turbines, internal combustion engines, hydraulic turbines, and combined-cycle systems to generate electricity. Steam turbines accounted for 42 percent of all the capacity and combined-cycle generating systems accounted for 27 percent. Table 9 provides existing 1995 nonutility generating capacity by prime mover technology.

The majority (more than 68 percent) of existing 1995 nonutility capacity is attributed to fossil-fueled electricity production.[7] Many facilities are able to switch from one fossil fuel to another if the fuel supply is interrupted or the economics warrant it. Some facilities are even able to switch from fossil fuels to renewable energy sources, while still others can use combustors that can burn two or more different fuels simultaneously, in varying combinations, to generate a desired heat output. Thus, the nonutility industry can be very adaptable, depending upon the type of equipment at a facility and based on economic conditions. Table 10 provides the 1995 nonutility capacity associated with each fossil fuel energy source.

Table 9 : Existing Capacity of Nonutilities by Prime Mover (1995)		
Prime Mover	**Generating Capacity (megawatts)**	**Percent of Total U.S. Capacity**
Steam Turbines	28,192	42
Combined-Cycle	17,417	27
Gas Turbines	12,081	18
Internal Combustion	2,018	3
Hydraulic Turbines	3,410	5
Others*	3,297	5
Total	**66,415**	**100**

* Includes nuclear generators.

Source: *1995 Capacity and Generation of Nonutility Sources of Energy.* Edison Electric Institute, Washington, DC. November 1996.

Table 10: Nonutility Capacity by Fossil Fuel Energy Source (1995)		
Fossil Fuel	**Generating Capacity (megawatts)**	**Percent of Total Fossil Fuel Nonutility Capacity**
Gas	33,221	73
Coal	10,324	23
Petroleum	1,657	4
Total	**45,202**	**100**

Source: *1995 Capacity and Generation of Nonutility Sources of Energy.* Edison Electric Institute, Washington, DC. November 1996.

The majority of the nonutility power producers use fossil fuels to generate electricity. Fossil fuels accounted for more than 287 million megawatthours, which was 72 percent of the total electricity produced by nonutilities in 1995.[8]

Gas was the fossil fuel used to generate the most electricity in the nonutility industry, providing a total of 213 million megawatthours of electricity in 1995. Coal was used to produce 70 million megawatthours of electricity, and petroleum was used to produce 4 million megawatthours of electricity. Table 11 provides 1995 nonutility generation by power producer class and energy source.

Table 11: 1995 Nonutility Net Generation by Primary Fossil Fuel Energy Source and Type of Producer (thousand megawatthours)

Energy Source	Cogenerators	Small Power Producers	Other Nonutility Power Producers	Total U.S. Nonutility Generation
Gas	200,080	0	13,357	213,437
Coal	63,440	0	6,740	70,180
Petroleum	3,957	0	121	4,079
Total	**267,477**	**0**	**20,218**	**287,696**

Source: *1995 Capacity and Generation of Nonutility Sources of Energy.* Edison Electric Institute, Washington, DC. November 1996.

II.B.5 Economic Trends

Change in Structure of the Utility Electric Power Industry

Utility electric power generation is one of the largest industries that remains regulated in the United States. Change is rapidly occurring in this industry due to the issuance by the FERC of Orders 888 and 889 (dated April 24, 1996), which encourage wholesale competition. Order 888 deals with issues of open access to transmission networks and stranded costs; Order 889 requires utilities to establish systems to share information on the availability of transmission capacity. To date, many States have initiated activities related to retail competition, and legislative proposals have been introduced into the U.S. Congress on restructuring the electric power industry.

With a competitive industry structure eminent, investor-owned utilities have been downsizing staff and reorganizing their company structures to lower costs. They have lowered costs by taking advantage of lower fuel prices and modifying fuel acquisition procedures. This has resulted in lower operation and maintenance costs. Some large investor-owned utilities have begun to expand their business investments into such areas as energy service companies; oil and gas exploration, development, and production; foreign ventures; and telecommunications. Numerous utilities are planning to improve their position in a competitive market through mergers and acquisitions. In 1995, 13 investor-owned utilities merged or had mergers pending.[9]

Publicly owned and cooperative utilities are expected to be affected by the posturing of the investor-owned companies. Although they can sell electricity at a competitive price, increased competition from investor-owned utilities and electricity marketing companies may require them to lower costs.

Many have already begun to reduce staff and engage in other cost-cutting measures. Mergers are also expected to occur among public utilities, however, not at the same rate as the investor-owned.

Stranded costs are a major concern for this industry as they move to a competitive market. Stranded costs are costs that have been incurred by the utilities to serve their consumers but cannot be recovered if the consumers choose other electricity suppliers. Estimates of stranded costs have been from $10 to $500 billion. Currently, utilities are looking for ways to mitigate stranded costs, and regulators are looking at alternatives for recovering these costs.[10]

The structure of the electric power industry is undergoing other changes. In the past, the electric power industry has been dominated by utilities, especially regulated investor-owned utilities. It is expected that utility generators will continue to dominate capacity in the United States, increasing from 703 gigawatts in 1995 to 724.4 gigawatts in 2015. In addition, nonutilities will continue to increase their role in the industry. Recent legislation has had an effect. For example, PURPA in 1978 has allowed QF status, and the Energy Policy Act of 1992 (EPACT) has removed constraints on utility ownership of significant shares of nonutility producers. In 10 years (1985-1995), the nonutility role in U.S. electric power industry has grown from 4 percent to 11 percent of the total generation.[11]

With the advent of a more competitive market, a new type of firm called "power marketers" has arisen in the electric power generation industry. Power marketers buy electric energy and transmission and other services from utilities, or other suppliers, and resell the products for profit. This practice started in the late 1980s, and growth in this market has increased competition in the wholesale market. Nine wholesale marketers existed in 1992; 180 existed by the end of 1995. The growth and success of power marketers signal a potential for fundamental change in the wholesale electricity business.

Projected Growth in the Power Generation Industry

Demands for electricity have slowed in recent years due to several factors. These factors include market saturation of electric appliances, improvements in equipment efficiency, utility investments in demand-side management programs, and legislation establishing more stringent equipment efficiency standards. In the 1960s, electricity demand grew by more than 7 percent a year. By the 1980s, this growth had slowed to only 1 percent per year. A further decline in growth is expected into the next century.[12]

Despite the slower demand growth, 319 gigawatts of new generating capacity are expected to be needed by 2015. This need is both a result of the demand and because of the amount of capacity that is expected to be retired. In particular, approximately 38 percent of the existing nuclear capacity is expected to be retired, in addition to 16 percent of the existing fossil-fueled steam turbine capacity. Of the new capacity needed, 81 percent is projected to be combined-cycle or combustion turbine technology expected to be fueled with natural gas or both oil and gas. Both of these technologies supply peak and intermediate capacity, but combined-cycle units can also be used to meet baseload requirements.

Before building new capacity, many utilities are exploring other alternatives to meet the growth demand. Some of these alternatives are life extension and repowering, power imports, demand-side management programs, and purchase from cogenerators. Even with these alternatives, a projected 1,063 new plants (assuming approximately 300 megawatts capacity per plant) will be needed by 2015 to meet the growing demand and to offset the retirements.[13]

[This page intentionally left blank.]

III. INDUSTRIAL PROCESS DESCRIPTION

This section describes the major industrial processes within the fossil fuel electric power generation industry, including the materials and equipment used and the processes employed. The section is designed for those interested in gaining a general understanding of the industry and for those interested in the interrelationship between the industrial process and the topics described in subsequent sections of this profile -- pollutant outputs, pollution prevention opportunities, and Federal regulations. This section does not attempt to replicate published engineering information that is available for this industry. Section IX lists available resource materials and contacts.

This section describes commonly used production processes, associated raw materials, the by-products produced or released, and the materials either recycled or transferred offsite. This discussion, coupled with schematic drawings of the identified processes, provide a concise description of where wastes may be produced in the process. This section also describes the potential fate (via air, water, and soil pathways) of these waste products.

III.A Industrial Processes in the Fossil Fuel Electric Generation Industry

The majority of the electricity generated in the United States today is produced by facilities that employ steam turbine systems.[14] Other fossil fuel prime movers commonly used include gas turbines and internal combustion engines. Still other power generation systems employ a combination of the above, such as combined-cycle and cogeneration systems. The numbers of these systems being built are increasing as a result of the demands placed on the industry to provide economic and efficient systems.

The type of system employed at a facility is chosen based on the loads, the availability of fuels, and the energy requirements of the electric power generation facility. At facilities employing these systems, other ancillary processes must be performed to support the generation of electricity. These ancillary processes may include such supporting operations as coal processing and pollution control, for example. The following subsections describe each system and then discuss ancillary processes at the facility.

III.A.1 Steam Turbine Generation

The process of generating electricity from steam comprises four parts: a heating subsystem (fuel to produce the steam), a steam subsystem (boiler and steam delivery system), a steam turbine, and a condenser (for condensation of used steam). Heat for the system is usually provided by the combustion

of coal, natural gas, or oil. The fuel is pumped into the boiler's furnace. The boilers generate steam in the pressurized vessel in small boilers or in the water-wall tube system in modern utility and industrial boilers. Additional elements within or associated with the boiler, such as the superheater, reheater, economizer and air heaters, improve the boiler's efficiency.

Wastes from the combustion process include exhaust gases and, when coal or oil is used as the boiler fuel, ash. These wastes are typically controlled to reduce the levels of pollutants exiting the exhaust stack. Bottom ash, another byproduct of combustion, also is discharged from the furnace.

High temperature, high pressure steam is generated in the boiler and then enters the steam turbine. At the other end of the steam turbine is the condenser, which is maintained at a low temperature and pressure. Steam rushing from the high pressure boiler to the low pressure condenser drives the turbine blades, which powers the electric generator. Steam expands as it works; hence, the turbine is wider at the exit end of the steam. The theoretical thermal efficiency of the unit is dependent on the high pressure and temperature in the boiler and the low temperature and pressure in condenser. Steam turbines typically have a thermal efficiency of about 35 percent, meaning that 35 percent of the heat of combustion is transformed into electricity. The remaining 65 percent of the heat either goes up the stack (typically 10 percent) or is discharged with the condenser cooling water (typically 55 percent).

Low pressure steam exiting the turbine enters the condenser shell and is condensed on the condenser tubes. The condenser tubes are maintained at a low temperature by the flow of cooling water. The condenser is necessary for efficient operation by providing a low pressure sink for the exhausted steam. As the steam is cooled to condensate, the condensate is transported by the boiler feedwater system back to the boiler, where it is used again. Being a low-volume incompressible liquid, the condensate water can be efficiently pumped back into the high pressure boiler.

A constant flow of low-temperature cooling water in the condenser tubes is required to keep the condenser shell (steam side) at proper pressure and to ensure efficient electricity generation. Through the condensing process, the cooling water is warmed. If the cooling system is an open or a once-through system, this warm water is released back to the source water body. In a closed system, the warm water is cooled by recirculation through cooling towers, lakes, or ponds, where the heat is released into the air through evaporation and/or sensible heat transfer. If a recirculating cooling system is used, only a small amount of make-up water is required to offset the cooling tower blowdown which must be discharged periodically to control

the build-up of solids. Compared to a once-through system, a recirculated system uses about one twentieth the water.[15] Figure 6 presents a typical steam generation process.

There are several types of coal-fired steam generators. A description of each follows. The classification of these generators is based on the characteristics of the coal fed to the burners and the mode of burning the coal. Coal-fired steam generation systems are designed to use pulverized coal or crushed coal. Before the coal is introduced to the burners, it must be processed, as discussed in Section III.A.6.

Figure 6: Steam Turbine Generation

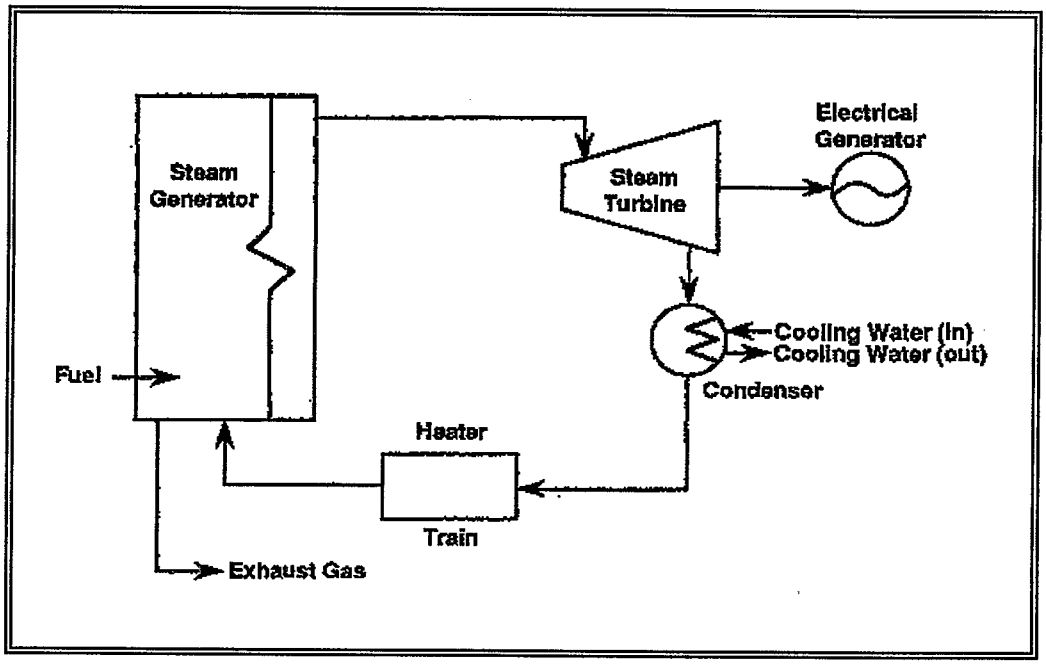

Stoker-Fired Furnace

Stoker-fired furnaces are designed to feed coal to the combustion zone on a traveling grate. Stokers can be divided into three general groups, depending on how the coal reaches the grate of the stoker for burning. The three general types of stokers are (1) underfeed, (2) overfeed, and (3) spreader configurations. Table 12 presents the general characteristics of these three general types of stokers. Figure 7 presents a schematic of a stoker coal feeder.

Table 12: Characteristics of Various Types of Stokers

Stoker Type and Subclass	Burning Rate * (BTU/hr/ft^2)	Characteristics
Spreader		
Stationary	450,000	Capable of burning a wide range of coals, best in handling fluctuating loads, high fly ash carry over, low load smoke.
Traveling grate	750,000	
Vibrating grate	400,000	
Overfeed		
Chain grate and traveling grate	600,000	Low maintenance but difficult in burning caking coals.
Vibrating grate	400,000	Low maintenance but difficult in burning weakly caking coals, smokeless operation.
Underfeed		
Single or double retort Multiple retort	400,000	Capable of burning caking coals and a wide range of coals, high maintenance, low fly ash carry over, suitable for continuous load operation.

* Maximum amount of British thermal units per hour per square foot of grate in the stoker.

Source: *Coal Handbook*, Robert Meyers (Ed.). Marcel Dekker, Inc. New York, NY, 1981 as referenced in *Wastes from the Combustion of Coal by Electric Utility Power Plants*. Report to Congress. US. Environmental Protection Agency, Office of Solid Waste. Washington, DC. February 1988. EPA/530-SW-88-002.

Figure 7: Stoker Coal Feeder

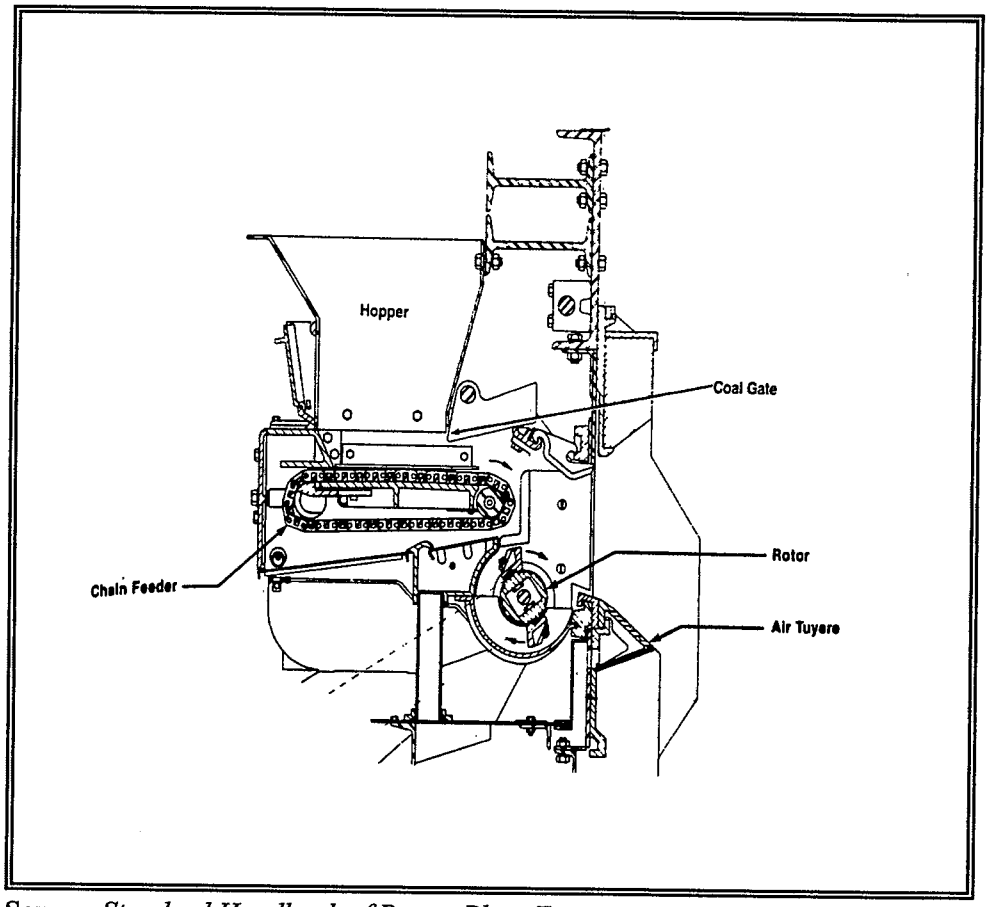

Source: *Standard Handbook of Power Plant Engineering*. Elliot, Thomas C. ed. McGraw-Hill, Inc. New York NY. 1989. Reproduced with permission of the McGraw-Hill Companies.

In a cyclone-fired furnace, fuel is fired under intense heat and air is injected tangentially to create a swirling motion as shown in Figure 8. The resulting hot gases exit through the cyclone bore into the cyclone in the furnace. Ash becomes a molten slag that is collected below the furnace. Coal is the primary cyclone fuel, but oil and gas are used as startup, auxiliary, and main fuels.

Figure 8: Typical Cyclone Coal Burners

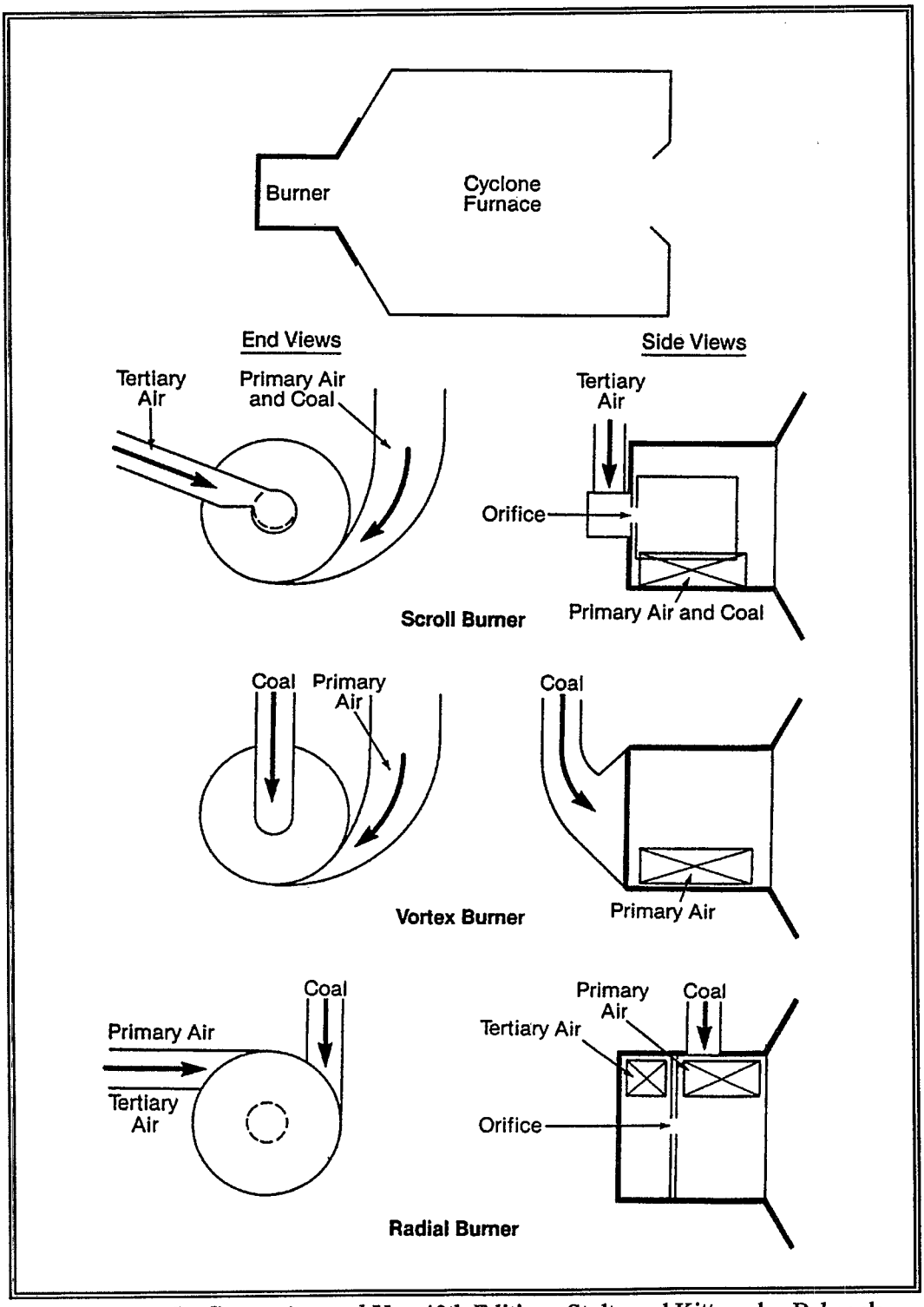

Source: *Steam, Its Generation and Use*; 40th Edition. Stultz and Kitto, eds. Babcock and Wilcox, Barbeton, OH. 1992. Reproduced with permission from the Babcock and Wilcox Co.

Tangential-Fired Furnace

In a tangential-fired furnace, both air and fuel are projected from the corners of the furnace along lines tangent to a vertical cylinder at the center. A rotating motion is created, allowing a high degree of mixing. This system provides great flexibility for multiple fuel firing (see Figure 9).[16]

Figure 9: Tangential Firing Pattern

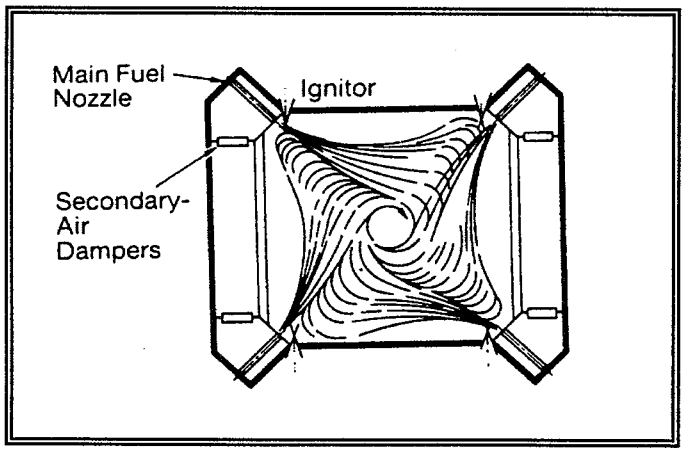

Source: *Standard Handbook of Power Plant Engineering*. Elliot, Thomas C. ed. McGraw-Hill, Inc. New York, NY. 1989. Reproduced with permission of the McGraw-Hill Companies.

Horizontal or Wall-Fired Furnace

In horizontal or wall-fired systems, pulverized coal and primary air are introduced tangentially to the coal nozzle. The degree of air swirl and the contour of the burner throat establish a recirculation pattern extending several throat diameters into the furnace. The hot products of combustion are directed back toward the nozzle to provide the ignition energy necessary for stable combustion. In this system, burners are located in rows on the front wall (see Figure 10) or both front and rear walls.[17]

Figure 10: Flow Pattern of Horizontal Firing

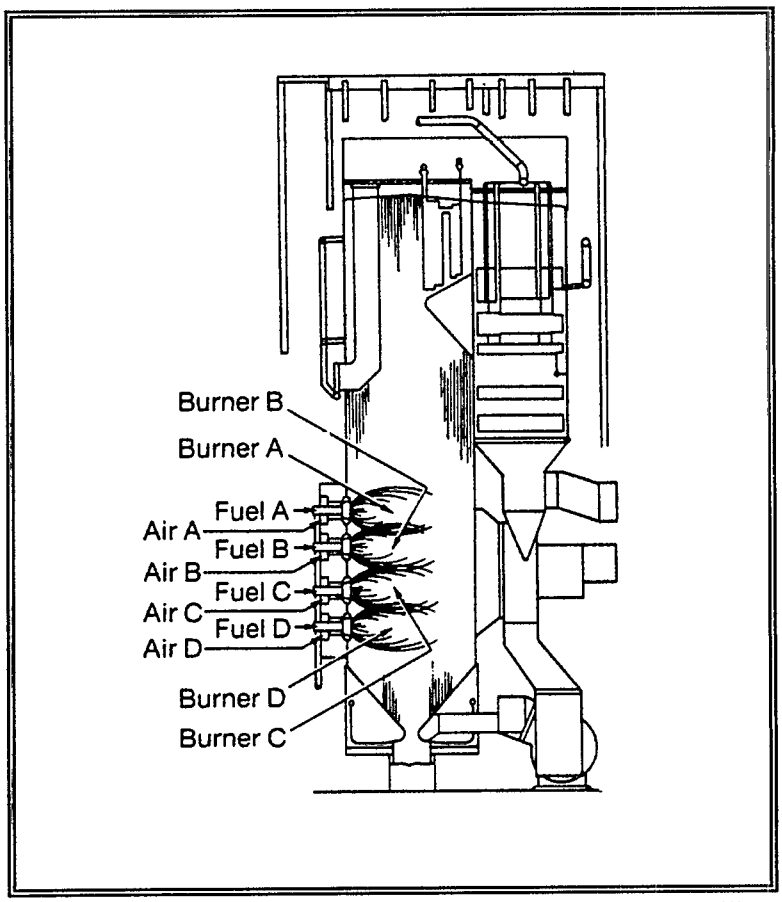

Source: *Standard Handbook of Power Plant Engineering*. Elliot, Thomas C. ed. McGraw-Hill, Inc. New York, NY. 1989. Reproduced with permission of the McGraw-Hill Companies.

Arch-Fired Systems

Vertical-fired systems are used to fire solid fuels that are difficult to ignite, such as coals with moisture and ash-free volatile matter of less than 13 percent. In this system, the pulverized coal is discharged through a nozzle surrounded by heated combustion air. High-pressure jets are used to prevent fuel-air streams from short circuiting. The firing system produces a looping flame with hot gases discharging at the center (see Figure 11).[18]

Figure 11: Flow Pattern of Arch Firing

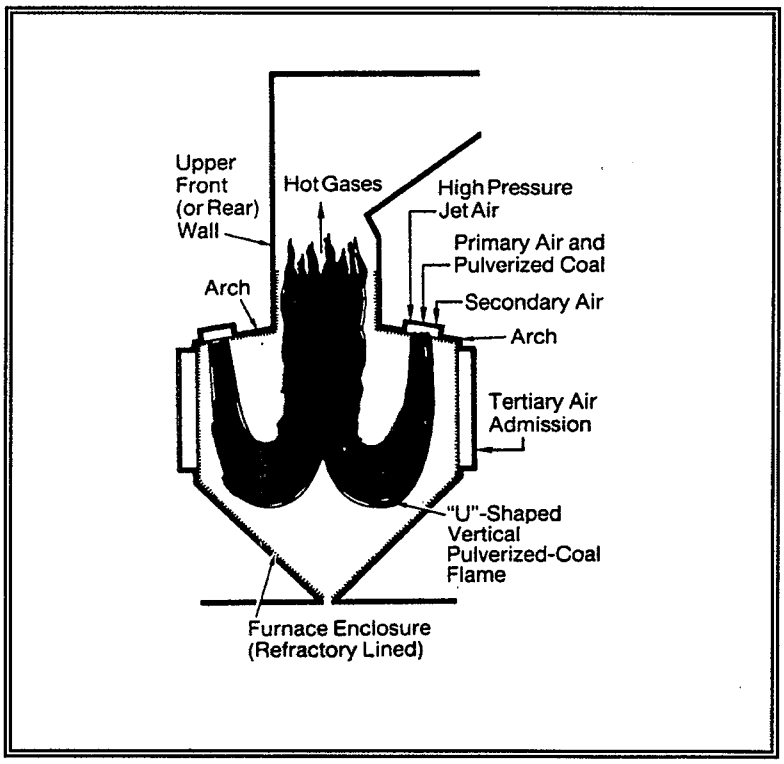

Source: *Standard Handbook of Power Plant Engineering*. Elliot, Thomas C. ed. McGraw-Hill, Inc. New York, NY. 1989. Reproduced with permission of the McGraw-Hill Companies.

Fluidized-Bed Combustors

In fluidized-bed combustors, fuel materials are forced by gas into a state of buoyancy. The gas cushion between the solids allows the particles to move freely, thus flowing like a liquid. By using this technology, SO_2 and NO_X emissions are reduced because an SO_2 sorbent, such as limestone, can be used efficiently. Also, because the operating temperature is low, the amount of NO_X gases formed is lower than those produced using conventional technology.

Fluidized-bed combustors are divided into two categories: circulating fluidized-beds and bubbling fluidized-beds (see Figure 12). Fluidized-bed combustors can operate at atmospheric pressure or in a pressurized chamber. In the pressurized chamber, operating pressures can be 10 to 20 times the atmospheric pressure. Pressurized fluidized-bed furnaces provide significant gain in overall thermal efficiency over atmospheric fluidized-bed furnances. [19]

Figure 12: Typical Bubbling Fluidized-Bed Boiler

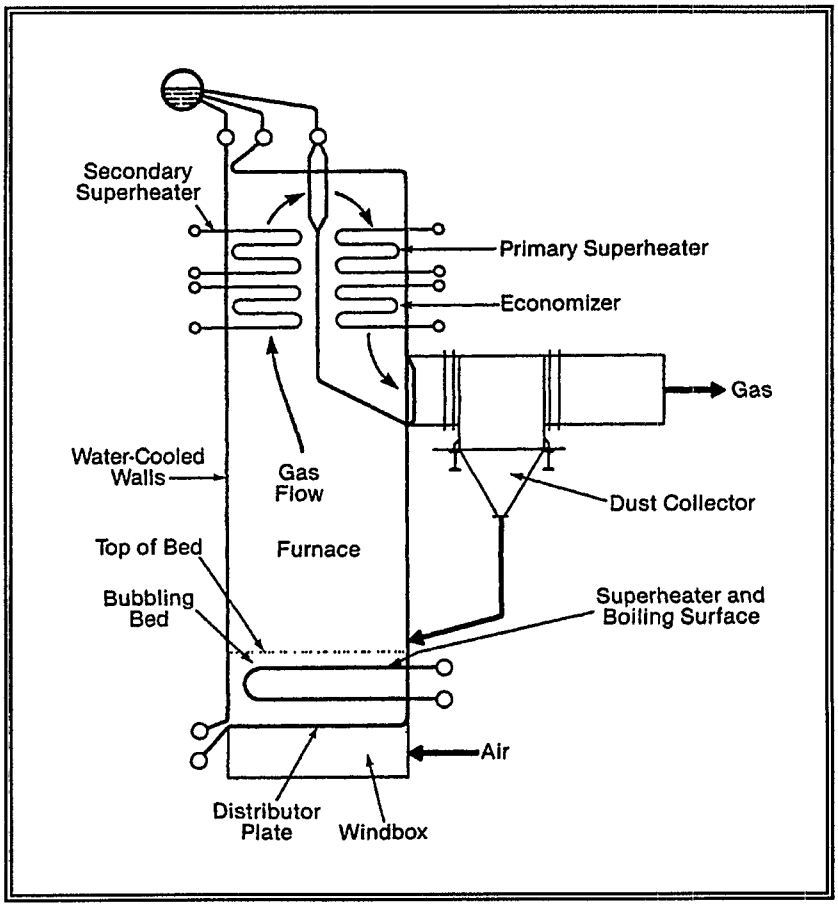

Source: Adapted from *Steam, Its Generation and Use*; 40th Edition. Stultz and Kitto, eds. Babcock and Wilcox, Barbeton, OH. 1992. Reproduced with permission from the Babcock and Will Cox. Co.

Fluidized-bed combustion allows for the use of high sulfur coals, high fouling and slagging fuels, and low British Thermal Unit (BTU) fuels. High ash coals burned in fluidized-beds require less preparation than in pulverized coal combustors. Additionally, fluidized-bed combustors require less maintenance than pulverized coal combustors.

III.A.2 Internal Combustion Generation

Internal combustion generating units, also known as diesel engines, have one or more cylinders in which fuel combustion occurs. Internal combustion generating units convert the chemical energy of fuels into mechanical energy in a design similar to an automobile engine. Attached to the shaft of the generator, the engine provides the mechanical energy to drive the generator

to produce electricity. Internal combustion generating units for power plants are typically designed to operate on either four- or two-stroke cycles.

Internal combustion generators are small and range in capacity from 2 to 6 megawatts. They are more efficient than gas turbines.[20] In addition, capital costs are low, they are easily transported, and they can generate electricity almost immediately upon startup. For this reason, internal combustion generators are often used for small loads and for emergency power.[21]

III.A.3 Gas Turbine Generation

Gas turbine systems operate in a manner similar to steam turbine systems except that combustion gases are used to turn the turbine blades instead of steam. In addition to the electric generator, the turbine also drives a rotating compressor to pressurize the air, which is then mixed with either gas or liquid fuel in a combustion chamber. The greater the compression, the higher the temperature and the efficiency that can be achieved in a gas turbine. Exhaust gases are emitted to the atmosphere from the turbine. Unlike a steam turbine system, gas turbine systems do not have boilers or a steam supply, condensers, or a waste heat disposal system. Therefore, capital costs are much lower for a gas turbine system than for a steam system.

In electrical power applications, gas turbines are typically used for peaking duty, where rapid startup and short runs are needed. Most installed simple gas turbines with no controls have only a 20- to 30-percent efficiency. Figure 13 presents a schematic of a simple gas turbine system.

Figure 13: Simple Gas Turbine Cycle

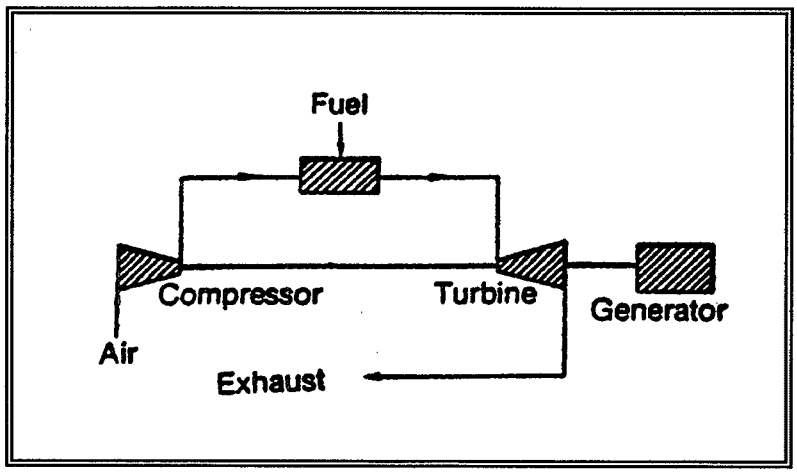

Source: *Standard Handbook of Power Plant Engineering*. Elliot, Thomas C. ed. McGraw-Hill, Inc. New York, N.Y. 1989.

III.A.4 Combined-Cycle Generation

Combined-cycle generation is a configuration using both gas turbines and steam generators. In a combined-cycle gas turbine (CCGT), the hot exhaust gases of a gas turbine are used to provide all, or a portion of, the heat source for the boiler, which produces steam for the steam generator turbine. This combination increases the thermal efficiency over a coal- or oil- fueled steam generator. The system has an efficiency of about 54 percent, and the fuel consumption is approximately 25 percent lower. Combined-cycle systems may have multiple gas turbines driving one steam turbine (see Figure 14).[22]

Figure 14: Combined Cycle with Heat Recovery

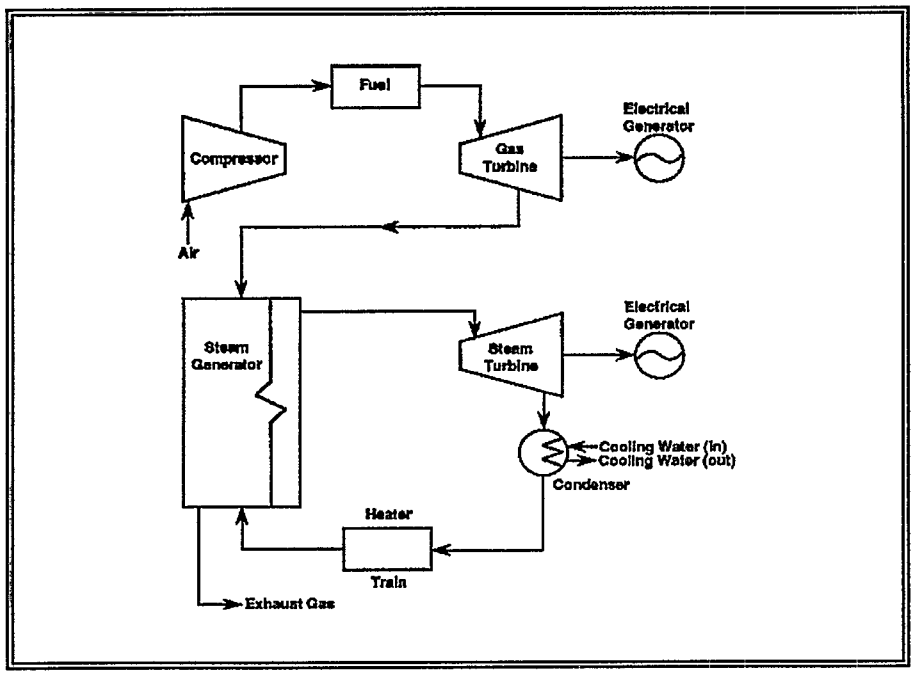

There are four major classifications of combined-cycle facilities:

- **Gas Turbine Plus Unfired Steam Generator**: A steam generator is installed at the discharge of a gas turbine to recover the heat in the gas turbine exhaust so as to create steam in the steam generator. The fuel is fired only in the gas turbine.

- **Gas Turbine Plus Supplementary-Fired Steam Generator**: A portion of the oxygen in the gas turbine exhaust is used to support further combustion in a supplementary firing system in the connecting duct between the gas turbine and the steam generator.

- **Gas Turbine Plus Furnace-Fired Steam Generator**: This generator is the same as the gas turbine plus supplementary-fired steam generator, except that essentially all of the oxygen from the gas turbine exhaust is used to support further combustion.

- **Supercharged Furnace-Fired Steam Generator Plus Gas Turbine**: A steam generator is placed between the air compressor and the gas turbine. The air compressor is used to pressurize the boiler where the fuel is fired. The products of combustion that have been cooled within the boiler are then discharged through a gas turbine.

In addition, integrated coal gasification combined-cycle (IGCC) units are combined systems that are in the demonstration stage, but are expected be in commercial operation by the year 2000. In an IGCC system, coal gas is manufactured and cleaned in a "gasifier" under pressure, thereby reducing emissions and particulates. The coal gas then is combusted in a CCGT generation system.

III.A.5 Cogeneration

Cogeneration is the merging of a system designed to produce electric power and a system used for producing industrial heat and steam. Cogeneration accounted for 75 percent of all nonutility power generation in 1995.[23] This system is a more efficient way of using energy inputs and allows the recovery of otherwise wasted thermal energy for use in an industrial process. Cogeneration technologies are classified as "topping cycle" and "bottoming cycle" systems, depending on whether electrical (topping cycle) or thermal (bottoming cycle) energy is derived first.

Most cogeneration systems use a topping cycle. This is shown as a steam turbine topping system in Figure 15. The process steam shown in Figure 15 is condensed as it delivers heat to an industrial process, and the resulting return condensate is returned back to the boiler as shown.

Facilities that cogenerate may be eligible for QF status under PURPA. To qualify, the facility must produce electric energy and "another form of useful thermal energy through sequential use of energy," and meet certain ownership, operating, and efficiency criteria established by FERC (See 18 CFR Part 292). In a topping cycle system, the fuel is used to generate power

with a steam boiler or gas turbine cycle combustor. The waste heat from the power generation process is then used in an industrial process.[24]

Figure 15: Cogeneration Plant Schematic

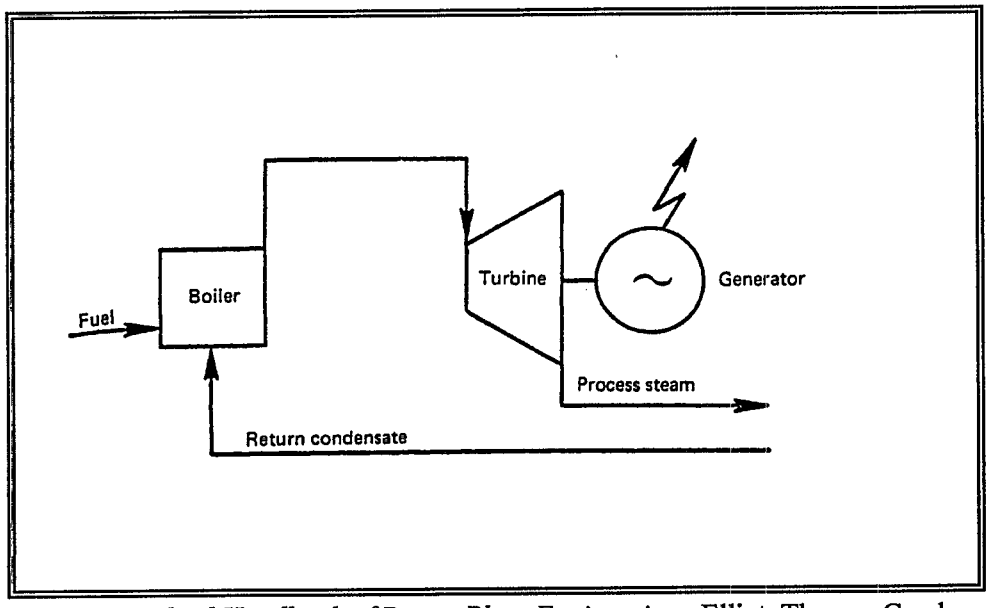

Source: *Standard Handbook of Power Plant Engineering*. Elliot, Thomas C. ed. McGraw-Hill, Inc. New York, NY. 1989. Reproduced with permission of the McGraw-Hill Companies.

III.A.6 Supporting Operations

Many operations associated with fossil fuel electric power generation facilities are not directly involved in the production of electricity but serve in a supporting role. This section discusses some of the major supporting processes.

Coal Processing

Fifty-seven percent of coal used in power plants is transported from mines by rail.[25] Coal is also transported by truck and barge. Once coal arrives at the plant, it is unloaded to live storage, dead storage, or directly to the stoker or hopper. Live storage is an enclosed silo or bunker next to conveyors leading to the pulverizer. Dead storage is exposed outdoors and is the backup supply. Coal unloading devices depend on the size and type of plant. Coal arriving by rail may be unloaded directly into the storage area or to conveyors leading directly to generation units. Coal arriving by barge is unloaded by buckets, which are part of coal towers or unloading bridges.[26] Coal shipped by truck generally needs little equipment for unloading.

Precautions must be taken in the transportation and storage of coal. In transporting coal during warmer months and in dry climates, dust suppression may be necessary. Dust suppression is typically accomplished through the use of water, oil, or calcium chloride ($CaCl_2$). In winter months, antifreeze chemicals are applied to the coal. Because coal oxidizes easily in open air, it should be stored in layered piles to minimize air flow. Hot areas should be removed from the pile to prevent fire; water should not be added to reduce the heat, since the water increases the air flow and, therefore, would increase the oxidation of the coal.

Coal may be cleaned and prepared before being either crushed or pulverized. Impurities in coal, such as ash, metals, silica, and sulfur, can cause boiler fouling and slagging. Coal cleaning can be used to reduce sulfur in the coal to meet sulfur dioxide (SO_2) emissions regulations. Cleaning the coal is a costly process that increases its fuel efficiency, yet reduces the size of the particles. Coal cleaning is typically performed at the mine by using gravity concentration, flotation, or dewatering methods. Some smaller stoker plants purchase pre-cleaned, pre-crushed coal.[27]

Coal is transported from the coal bunker or silo to be crushed, ground, and dried further before it is fired in the burner or combustion system. Many mechanisms can be used to grind the coal and prepare it for firing. Pulverizers, cyclones, and stokers are all used to grind and dry the coal. Increasing the coal's particle surface area and decreasing its moisture content greatly increases its heating capacity. Once prepared, the coal is transported within the system to the combustion system, or boiler. Devices at the bottom of the boilers catch ash and/or slag.

Air Pollution Control Processes

Air pollution control devices found in fossil fuel-fired systems (particularly steam electric power facilities) include particulate removal equipment, sulfur oxide (SO_X) removal equipment, and nitrogen oxide (NO_X) removal equipment. Particulate removal equipment includes electrostatic precipitators, fabric filters, or mechanical particulate collectors, such as cyclones. SO_X removal equipment includes sorbent injection technologies and wet and dry scrubbers. Both types of scrubbers result in the formation of calcium sulfate and sulfite as waste products. NO_X emission control systems include low NO_X burners and selective catalytic or non-catalytic reduction technologies. The selective catalytic and non-catalytic reduction technologies convert oxides of nitrogen into nitrogen gas and water.

Other Processes to Mitigate Environmental Impacts

Control technologies are used at many utility electric power generation facilities to mitigate the environmental impacts of cooling water intake structures. These technologies may include intake screening systems, passive intake system (physical exclusion devices), or fish diversion and avoidance systems. Technologies used to mitigate thermal pollution include cooling towers, cooling ponds or lakes, and sprinklers. Other control technologies may include recycling and reuse equipment for metals recovery; evaporators; and physical, chemical, and biological wastewater treatment.

III.B Raw Material Inputs and Pollution Outputs

The primary raw material used in fossil fuel electric power generation is the fossil fuel needed as the energy source to drive the prime mover (i.e., turbine). Fossil fuels employed in the United States predominantly include coal, petroleum, and gas. Other inputs include water (for cooling and steam generation) and chemicals used for equipment cleaning and maintenance. Pollution outputs include solid waste pollution, wastewater pollution, air pollution, and thermal pollution. The following subsection discusses the major sources of raw materials and the sources of emissions associated with the power generation industry.

III.B.1 Fossil Fuels and Other Raw Material Inputs

The major types of fossil fuels used for electricity generation in the United States are coal, petroleum, gas. Other fossil fuels used include petroleum coke, refinery gas, coke oven gas, blast furnace gas, and liquefied petroleum gas. These latter fuels are used much less frequently and, therefore, will not be discussed in this notebook.

Coal

Coal is the most abundant fossil fuel in the United States and the most frequently used energy source for U.S. electricity generation. More than one-half of all electricity generated by utilities comes from coal-fired facilities.[28] Although the use of coal has decreased since the 1970s, some areas of the country use coal almost exclusively.

Coals used for electric power generation are very heterogeneous and vary in content, depending on the location of the mine. The major chemical makeup, which includes carbon, hydrogen, and oxygen, also contains impurities, such as minerals and sulfur. These impurities are a major concern because they contribute to the pollutants produced during combustion of the coal.

Of all the fossil fuel used for electricity generation, coal requires the most extensive processing, handling, storage, and loading and unloading facilities. Coal firing requires the use of crushers, pulverizers, ash handling equipment, dust control, emissions control equipment, and soot blowers.

Petroleum

Petroleum, or crude oil, is the source of various fuel oils used as the energy source for power generation. As an energy source, petroleum accounts for less than five percent of all electricity receipts in the United States. However, numerous utilities in the New England States, New York, Florida, and Hawaii still rely on petroleum as an energy source.[29]

Most petroleum used for power generation is refined prior to use. Typical fuel oils include fuel oil numbers 4, 5, and 6 (heavy oil) and constitute the majority of all petroleum receipts at electric utilities. Smaller amounts of fuel oil number 2 (light oil) are used typically for startup and flame stabilization of the boilers.[30] Other less frequently used sources include topped crude, kerosene, and jet fuel.

Fuel oils used for electricity generation require special handling, storage, and loading and unloading facilities. Oil requires ash handling equipment, dust control, emissions control equipment, soot blowers, and, in some instances, warming and heating facilities.

Gas

Gas is used less than coal as a primary fuel source at power generation utilities. Gas is widely used for industrial electric power generation, however. Gas is used in those areas of the United States where it is readily accessible or in States in which environmental laws for air emissions are stringent (e.g., California). Many of the facilities that use gas also use petroleum in dual-fired generating units. The use of one fuel over the other is based on economics.

Natural gas must be treated to produce commercial fuel. Natural gas comprises primarily methane and ethane. Natural gas suitable for use as a fuel in power generation facilities must be at least 70-percent methane, 60-percent propane, or 25-percent hydrogen. The fuel may come in either a gaseous or liquid form.[31]

Gas has one advantage over other fuels in that it is a cleaner burning fuel. Therefore, some electric utilities use gas in order to comply with environmental regulations. Gas used for generating electricity requires

relatively little special handling (piping) and may or may not require storage facilities.

Other Inputs

In addition to fossil fuels, electric power generation requires other material inputs. These inputs include (1) water for steam condensation and equipment cooling, (2) lime or limestone, as a sorbent for pollution control equipment, (3) chlorine and/or biocides to prevent biofouling of steam condensers and cooling towers, (4) chemical solvents, oils, and lubricants for equipment cleaning and maintenance.

III.B.2 Pollutant Outputs

Pollutants are generated as byproducts from the burning of fossil fuels to generate electricity. The combustion process releases highly regulated pollutants, such as NO_X, carbon monoxide (CO), particulate matter (PM), SO_2, volatile organic compounds (VOCs), organic hydrocarbons, and trace metals, into the air. Combustion waste, the majority of which is ash waste, is created during combustion processes using coal or oil for fuel. Non-combustion wastes, such as cooling, process, and storm waters, that are discharged from fossil fuel electric power generation facilities have the potential to release pollutants (e.g., chlorine, heavy metals, and thermal pollution) into surface waters. The following discussion highlights each of the waste streams created during the generation of fossil fuel electric power.

Air Emissions

Air emissions from the stack gases from coal- and oil-fired boilers include four of six criteria pollutants regulated through the National Ambient Air Quality Standards (NAAQS) under the Clean Air Act (CAA) as amended: NO_X, CO, SO_2, and PM. Amounts of SO_2 emitted depend largely on the amount of sulfur present in the coal or oil and the method used to generate steam.

Other emissions regulated by the CAA commonly contained in emission gases are total organic carbon (TOC) as methane, non-methane hydrocarbons (NMHC), and VOCs. Traces of lead, another criteria pollutant, and other metals and minerals are also found. These metals are present in the coal and oil. Sulfur is also found in these fuels (more in coal than in oil), and fly ash is the product of sulfur and other mineral materials that do not combust.

Fugitive dust from coal piles and fuel handling equipment is another source of particulates. In addition, fugitive emissions of VOCs can arise from coal

piles during low temperature devolatilization. Thermal rise plumes are also discharged from cooling towers. These plumes contain such pollutants as heat and some trace materials in the water vapor.

Compared to a fossil-fueled steam turbine generating system with no air pollution controls, a gas-fired power generation system with no controls emits less tonnage of NO_X and SO_2 and trace amounts of TOC, particulate matter, and CO.

Combined-cycle gas turbines have virtually no SO_2 emissions because of the purity of natural gas. Because oil and coal are not used, solid waste is eliminated, and CO_2, NO_X, and thermal pollution are cut by 60 percent.

Cogeneration is considered a pollution prevention technology. Other benefits of cogeneration are reduced fuel consumption and lower air emissions. Because of their smaller size, however, cogeneration systems in the United States tend to have lower stack heights. Therefore, air emissions to the immediate atmosphere contribute to increased local pollution.

Combustion Wastes

Two principal wastes are associated with the combustion of fossil fuels: ash waste and flue gas desulfurization (FGD) wastes. The quantities of these wastes generated depend upon the fossil fuel burned.

Ash waste -Two types of ash are generated during combustion of fossil fuels: bottom ash and fly ash. Ash that collects at the bottom of the boiler is called bottom ash and/or slag. Fly ash is a finer ash material that is borne by the flue gas from the furnace to the end of the boiler. Bottom ashes are collected and discharged from the boiler, economizer, air heaters, electrostatic precipitator, and fabric filters. Fly ash is collected in the economizer and air heaters or is collected by the particulate control equipment. Coal-fired facilities generate the largest quantity of ash; gas facilities generate so little that separate ash management facilities are not necessary. Fly and bottom ash may be managed separately or together in landfills or in wet surface impoundments.

Ashes differ in characteristics depending upon the content of the fuel burned. For coal, the chemical composition of ash is a function of the type of coal that is burned, the extent to which the coal is prepared before it is burned, and the operating conditions of the boiler. These factors are very plant- and coal-specific. Generally, however, more than 95 percent of ash is made up of silicon, aluminum, iron, and calcium in their oxide forms, with magnesium, potassium, sodium, and titanium representing the remaining major

constituents. Ash may also contain a wide range of trace constituents in highly variable concentrations. Potential trace constituents include antimony, arsenic, barium, cadmium, chromium, lead, mercury, selenium, strontium, zinc, and other metals.

Flue gas desulfurization waste - If coal or oil is the fuel source, the FGD control technologies result in the generation of solid wastes. Wet lime/limestone scrubbers produce a slurry of ash, unreacted lime, calcium sulfate, and calcium sulfite. Dry scrubber systems produce a mixture of unreacted sorbent (e.g., lime, limestone, sodium carbonates, calcium carbonates), sulfur salts, and fly ash. Sludges are typically stabilized with fly ash. Sludges produced in a wet scrubber may be disposed of in impoundments or below-grade landfills, or they may be stabilized and disposed of in landfills. Dry scrubber sludges may be managed dry or wet.

Non-Combustion Wastes

Non-combustion wastes can be categorized into contact and noncontact wastes. Contact wastes come in contact with combustion wastes and, therefore, contain the same constituents as the combustion wastes. In many cases, these contact wastes are managed with the combustion wastes. Non-contact wastes do not come in contact with ashes or FGD wastes and may be managed separately. Table 13 summarizes the typical waste streams, potential pollutants, and ways of managing these pollutants. Figure 16 shows where the waste streams are generated at a typical steam electric power plant.

Table 13: Summary of Typical Waste Streams and Pollutants Generated at Fossil Fuel Electric Power Generation Facilities Based on Fuel Type

Fuel Type	Wastes/Pollutant	Air Emissions	Combustion Wastes	Non-Combustion Wastes
Coal	Process wastes	Flue gas and heat - thermal rise plume.	Bottom ash, fly ash, and FGD wastes desulfurization, and fly ash.	*Contact†:* ash transport, gas-side boiler cleaning,* FGD blowdown, coal pile runoff, pyrite waste, floor drains. *Noncontact:* once-through cooling water,* cooling system blowdown,* boiler blowdown,* water-side boiler cleaning,* demineralizer regenerent.*
	Pollutants	SO_2, NO_X, CO_2, CO (more from small boilers), VOCs, TOC, PM, metals, sulfur.	Heavy metals, ferrous sulfate, sulfuric acid, sulfate, $CaSO_3$, and CaO.	Chlorine, organic chemicals, metals, pH, TSS, TDSS, ferrous sulfate, sulfuric acid, metals, pyrite.
Oil	Process wastes	Flue gas and heat - thermal rise plume.	Bottom ash and fly ash.	*Contact†:* ash transport, gas-side boiler cleaning,* FGD blowdown, floor drains. *Noncontact:* once-through cooling water,* cooling system blowdown,* boiler blowdown,* water-side boiler cleaning,* demineralizer regenerent.*
	Pollutants	Low SO_2, NO_X (as NO_X particulate), CO_2, sulfur, and PM compared to coal. Metals and TOC.	VOCs and heavy metals.	Chlorine, organic chemicals, metals, pH, TSS, TDSS, ferrous sulfate, sulfuric acid, metals.
Gas	Process wastes	Flue gas.	None.	*Contact†:* infrequent gas-side boiler cleaning,* floor drains. *Noncontact:* once-through cooling water,* cooling system blowdown,* boiler blowdown,* water-side boiler cleaning,* demineralizer regenerent.*
	Pollutants	Low No_X, and SO_2 compared to oil and coal. Thermal pollution is 60% less than coal.	None.	Chlorine, organic chemicals, metals, pH, TSS, TDSS, metals.

*** Waste streams at facilities with steam turbines. † In contact with combustion wastes.**

Figure 16: Waste Streams Generated at a Typical Fossil Fuel Electric Power Generation Plant

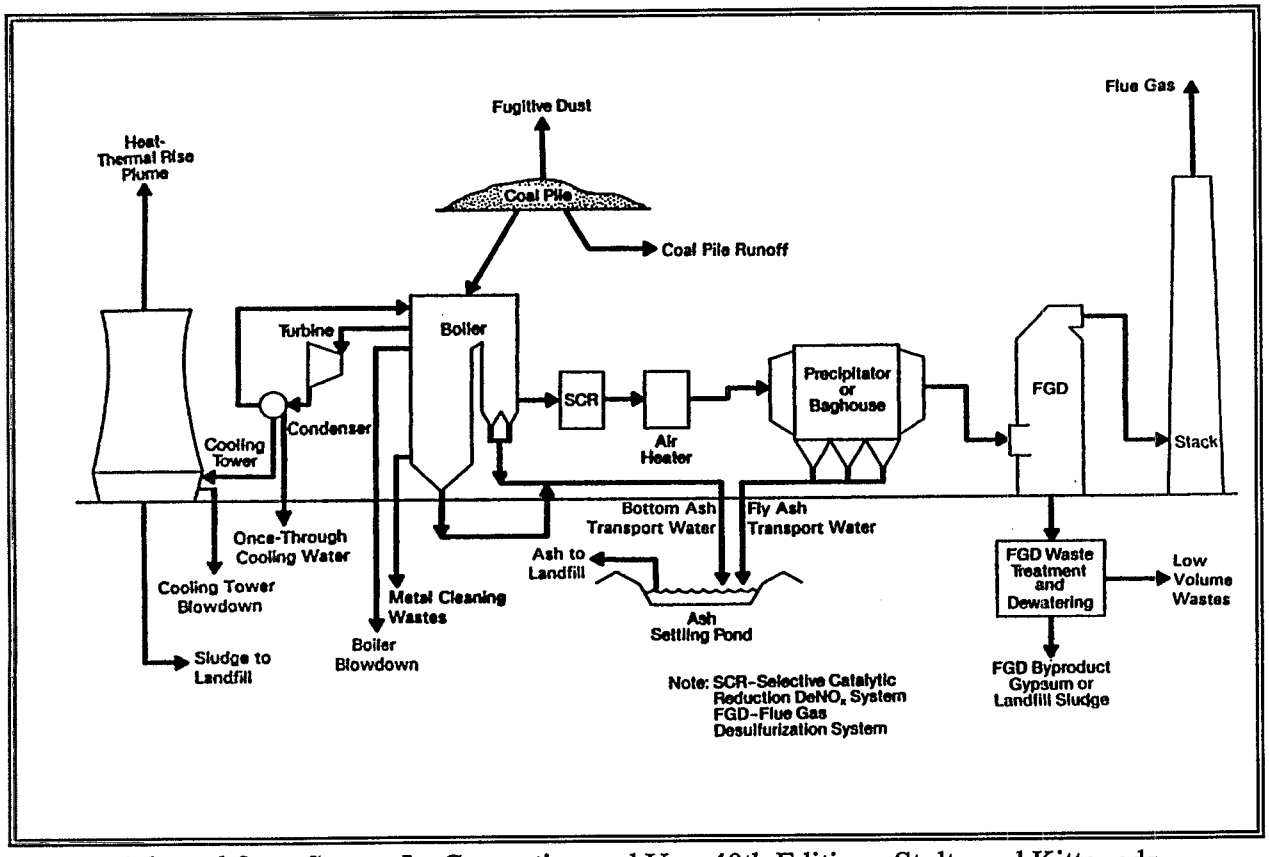

Source: Adapted from Steam, Its Generation and Use, 40th Edition. Stultz and Kitto, eds. Babcock and Wilcox, Barbeton, OH. 1992. Reproduced with permission from the Babcock and Wilcox Co.

Contact, Non-Combustion Wastes

Metal and boiler cleaning waste (gas-side) - Gas-side metal and boiler cleaning wastes are produced during maintenance of the gas-side of the boiler, including the air preheater, economizer, superheater, stack, and ancillary equipment. Residues from coal combustion (soot and fly ash) build up on the surfaces of the equipment and must be removed periodically. This buildup is typically removed with plain, pressurized water containing no chemical additives. Wastewaters are sometimes neutralized and metals precipitated. At coal plants, the wastewater is most often put into the ash ponds without treatment.

Ash transport wastewater - Ash produced from the combustion of coal or oil is typically collected in a sluice water that is then sent to settling ponds for

disposal. The ash settling pond discharge may contain dissolved and suspended solids, heavy metals (nickel, iron, vanadium), organometalic compounds, and magnesium compounds when magnesium oxides are used for corrosion control.

Flue gas desulfurization blowdown - Blowdown from FGD systems is discharged when the recycled liquor begins to build up chlorine. The discharge contains calcium sulfate, calcium chloride, and sodium chloride. Depending upon fly ash carryover, the wastewater may contain metal ions.

Coal pile runoff - Open storage of coal allows contact with rain and/or other precipitation. These storm waters react with the minerals in the coal to produce a leachate contaminated with ferrous sulfate and sulfuric acid. The low pH of the leachate reacts with the coal, thereby accelerating dissolution of metals in the coal.

Pyrite waste - Coal mills or pulverizers reduce the size of the feed coal going into the boiler. During this process, various impurities, such as hard coal, rocks, and pyrites (an iron-based mineral), are mechanically separated from the feed stream. This solid waste is typically collected and fed into the bottom ash transport system and eventually co-disposed with the ash in either a landfill or an impoundment.

Floor drains - Floor and yard drains collect rainfall, seepage, leakage wastewaters from small equipment cleaning operations, process spills, and leaks. As a result, the pollutants found in the wastewaters are variable. The waste streams may contain coal dust, oil, and detergents.

Noncontact, Non-combustion Wastes

Once-through cooling water - When a steam turbine is used to drive the electric generator the process is called "steam electric." Steam electric units require large amounts of cooling water for steam condensation and efficient thermal operation. The cooling water flow rate through the condenser is by far the largest process water flow, normally equating to about 98 percent of the total process water flow for the entire unit. In a once-through cooling water system, water is usually taken into the plant from surface waters, but sometimes ground waters or municipal supplies are used. The water is passed through the condenser where it absorbs heat and is then discharged to a receiving water. Chlorine, which is added intermittently to the cooling water to control biofouling, is a pollutant of concern in cooling water discharge. Heat is also a concern.

Cooling tower blowdown - Cooling water is recirculated when the water supply is inadequate to sustain a once-through system or when thermal discharges are regulated or undesirable. In a system that recirculates cooling water, heat from the water is transferred to the atmosphere via cooling towers, cooling ponds, or spray facilities. The recirculated water eventually builds up dissolved solids and suspended matter. Cooling tower blowdown (a percentage of the recirculated water) is discharged regularly and additional fresh makeup water is treated and added into the recirculating system to relieve this buildup of solids. Pollutants of concern in cooling tower blowdown discharges include chlorine, organic chemicals, and trace metals from biofouling and corrosion control.

Boiler blowdown - Water to make steam may be recirculated and eventually build up impurities in the boiler. This water is periodically purged from the system. Boiler blowdown is typically alkaline, is low in total dissolved solids, and contains chemical additives used to control scale and corrosion. Blowdown also contains trace amounts of copper, iron, and nickel.

Metal and boiler cleaning waste (water-side) - Metal cleaning wastes are produced during cleaning of the boiler tubes, superheater, and condenser located on the water-side or steam-side of the boiler. Scale and corrosion products build up in the boiler and must be removed with chemical cleaning using an acid or alkaline solution. The composition of the waste solvents depends on the construction material of the feedwater system, but largely consists of iron with lesser amounts of copper, nickel, zinc, chromium, calcium, and magnesium. Spent solvents may be treated in numerous ways: (1) neutralization and then discharge, (2) evaporation in other operating boilers onsite, (3) dedicated holding ponds, (4) mixing with rinsate and sending to ash impoundments, or (5) disposal offsite.

Demineralizer Regenerant - Boiler systems may require treatment of boiler makeup water prior to use. Ion exchange resins used in the treatment of the water accumulate cations and anions removed from the raw water. These resins are regenerated using a strong acid, such as sulfuric acid, or a strong base, such as sodium hydroxide. Regenerant wastes contain dissolved ions removed from the raw wastewater and excess acid or base. Often, the waste is directed into the ash impoundment for disposal or to a settling pond with other liquid wastes prior to discharge.

IV. WASTE RELEASE PROFILE

This section provides estimates and reported quantities of wastes released from the fossil fuel electric power generation industry. Currently, this information is not available from the Toxics Release Inventory (TRI) under the Emergency Planning and Community Right-to-Know Act (EPCRA). However, regulations promulgated on May 1, 1997, would require facilities that combust coal and/or oil for the purpose of generating power for distribution in commerce to begin reporting in 1999 (for the period from January 1 to December 31, 1998). Because TRI reporting is not currently required, other sources of waste release data have been identified for this profile.

This section comprises three subsections. The first section provides available data on releases of solid wastes from fossil fuel electric power generation facilities. The second section provides available data on releases to surface waters. A third section provides available data on releases of criteria pollutants and hazardous pollutants to the air.

IV.A Available Solid Waste Release Data for the Fossil Fuel Electric Power Generation Industry

As described previously, the primary solid waste releases from coal- and oil-fired steam electric facilities are fly ash and bottom ash produced during the combustion process. An increasing number of facilities must condition flue gases to remove sulfur compounds, which results in the generation of another solid waste typically referred to as FGD sludge. The following tables present aggregated ash and FGD sludge generation estimates for utility and nonutility steam electric facilities.

Table 14 presents the estimated quantity of fly and bottom ash (combined) for utility boilers in 1994. Coal ash figures have been derived from 1994 DOE, EIA Form EIA-767 utility survey responses. These responses are compiled by the Edison Electric Institute (EEI) in their *Power Statistics Database.*[32] The oil ash figures were developed by the Electric Power Research Institute (EPRI) based on utility-provided estimates, as well as extrapolations based on oil consumption and particulate collection efficiencies for individual plants. Gas-fired facilities are not presented in the table because gas combustion does not generate measurable quantities of particulate ash. In general, coal-fired utilities produce ash at approximately 10 percent of the fuel consumption rate. This high rate of production confirms that ash management can represent an important operational consideration at coal plants. In contrast, oil-fired utilities produce much less than 0.1 percent of the total ash produced by the coal-fired facilities. This

figure reflects the low ash content of oil compared with coal, the typically lower requirements for particulate collection devices at coal-fired facilities, the small average particle size of oil ash, and the small contribution that oil currently makes to total U.S. electricity generation.

Table 14: Generation and Disposition of Utility Fly and Bottom Ash, 1994 (thousand short tons)

Fuel Type	Number of Plants	Quantity Sold	Quantity Removed by Contractor	Quantity Landfilled	Quantity Ponded	Quantity Used Onsite, Given Away, or Disposed of in Other Ways	Total Quantity Collected for the Record Year (1994)
Coal*	404	12,122	8,762	24,849	19,929	4,014	69,676
Coal/Gas	32	830	546	636	133	83	2,228
Coal/Nuclear	2	279	0	0	26	29	334
Coal/Oil	26	368	401	303	470	180	1,722
Coal/Oil/Gas	2	1	41	45	0	0	87
Coal/Wood	1	0	0	0	0	0	0
Subtotal Coal	**467**	**13,600**	**9,750**	**25,833**	**20,558**	**4,306**	**74,047**
Oil**	73	n/a	n/a	n/a	n/a	n/a	23
Totals	**540**	**13,600**	**9,750**	**25,833**	**20,558**	**4,306**	**74,070**

* Coal ash values provided in EEI *Power Statistics Database (1994 Data)*. Prepared by Utility Data Institute, McGraw-Hill, Washington, DC. 1995. Plants include only those reporting coal as primary or secondary fuel. Includes 88 facilities reporting zero waste generation: 26 facilities reported zero fuel consumption and 62 facilities did not exceed the capacity and/or ash generation reporting thresholds for the DOE EIA 767 Survey.

** Oil ash values are for 1995. Source: *Oil Combustion By-Products -- Chemical Characteristics and Management Practices: Draft Report.* Electric Power Research Institute, Palo Alto, California. March 1997.

Table 14 also indicates the range of management options employed by utilities in managing coal ash. While the figure varies considerable between operators and sites, roughly one-third of all U.S. utility coal ash finds its way to some type of beneficial use project. Of the material remaining in traditional disposal environments, the majority is managed in onsite impoundments or landfills. These units vary in size, design, and environmental controls, depending on the age, the State, and the operator.

Table 15 presents similar findings for utility FGD sludge generation and management. Again, the data reflect utility responses to the Form EIA-767, as compiled by EEI in the *Power Statistics Database*. Note that there are no oil-fired utility boilers equipped with FGD scrubbers. The quantity of FGD

sludge generated at a given plant is a function of the sulfur content of the coal consumed, the total quantity of coal consumed, the type of scrubber

Table 15: Generation and Disposition of Utility FGD Sludge, 1994 (thousand short tons)

Fuel Type	Number of Plants	Quantity Sold	Quantity Removed by Contractor	Quantity Landfilled	Quantity Ponded	Quantity used onsite, given away, or disposed of in other ways	Total Quantity Collected for the record year (1994)
Coal	71	118	759	8,286	4,082	708	13,953
Coal/Gas	4	106	6	479	0	5	596
Coal/Nuclear	0	0	0	0	0	0	0
Coal/Oil	2	18	5	55	0	0	78
Coal/Oil/Gas	1	0	0	33	0	0	33
Coal/Wood	0	0	0	0	0	0	0
Totals	**78**	**242**	**770**	**8,853**	**4,082**	**713**	**14,660**

Source: EEI *Power Statistics Database (1994 Data)*. Prepared by Utility Data Institute, McGraw-Hill, Washington, DC. 1995.

employed, the efficiency of reaction of the scrubber, and other factors. The majority of FGD sludge is managed in onsite landfills or impoundments.

Table 16 presents an estimate of the 1990 coal ash generation by nonutility fossil fuel combustors, broken out by major industrial category. Based on EPA Office of Air and Radiation's 1990 *Particulate Inventory Database (Version 3)*, the ash figures are derived from the estimated 1990 coal consumption and coal ash content for the boiler population. The table includes all coal combustors permitted as major sources of criteria pollutants under the CAA and, therefore, includes many combustors that do not produce electricity. The electric generators, however, may be expected to represent the largest of the nonutility combustors and the greatest portion of the fuel usage by that population, such that the estimates shown provide at least a fair picture of the ability of the population to generate ash.

Compared with the utility coal ash estimates presented above, the nonutility universe represents only roughly 5 percent of the total U.S. ash generation. This fact reflects the generally small boiler size and the small aggregate coal consumption represented by nonutility combustors. Two industry categories, paper and chemicals manufacturing, represent 50 percent of all nonutility coal consumption, with only five industry categories accounting for more than 80 percent of all nonutility coal consumption.

Table 16: Estimated Nonutility Generation of Coal Ash, 1990

Standard Industrial Classification	Number of Facilities	Number of Boilers	Total Capacity (MMBTU)	Estimated Ash Generation (1,000 tons)
2600-2699, Paper and Allied Products	139	243	61,348	1,189
2800-2899, Chemicals and Allied Products	116	276	54,031	1,025
3300-3399, Primary Metals Industries	45	85	20,344	500
2000-2099, Food and Kindred Products	94	151	21,391	402
4900-4999, Electric, Gas, and Sanitary Services	29	83	30,234	392
3700-3799, Transportation Equipment	57	162	14,581	125
2200-2299, Textile Mill Products	58	101	7,272	107
1400-1499, Mining and Quarrying of Non-Metallic Minerals, Except Fuels	7	15	6,620	76
3800-3899, Measuring, Analyzing, and Controlling Instruments	1	3	1,976	66
3000-3099, Rubber and Miscellaneous Plastic Products	20	37	3,779	63
TOTALS (Top Ten Ash Producing SIC Categories)	**566**	**1,156**	**221,576**	**3,945**
Percentage of Total Universe	**76**	**79**	**89**	**93**
TOTALS (Complete Nonutility universe)	**749**	**1,467**	**249,437**	**4,263**

Source: *Nonutility Fossil Fuel Combustion: Sources and Volumes - Revised Draft Report.* Prepared for U.S.EPA, Office of Solid Waste by Science Applications International Corporation, McLean, VA. December 1996.

As discussed previously, steam electric facilities may generate a variety of other solid wastes. These may include boiler and cooling water treatment wastes, coal mill rejects, boiler cleaning wastes, and a variety of smaller waste streams incidental to power generation of ancillary activities. At coal plants, these waste streams typically are small compared with ash and sludge generation. At oil- and gas-fired plants, they may represent the largest solid wastes present at the site. Unfortunately, available data sources do not provide credible estimates of the total quantity of these materials generated at utility and nonutility steam electric sites.

IV.B Available Water Release Information for the Fossil Fuel Electric Power Generation Industry

The EPA Office of Water, Office of Science and Technology, Engineering and Analysis Division, has collected water release data in evaluating the need for revisions to the 1982 Effluent Limitations Guidelines and Standards for the Steam Electric Point Source Category. The EPA has identified 53 chemicals (29 priority and 24 nonconventional) as pollutants of interest in wastewaters discharged from steam electric power generation facilities. These pollutants were identified in the EPA Permit Compliance System (PCS) database. The PCS is a computerized information management system maintained by the EPA Office of Enforcement. The PCS contains data on permit conditions, monitoring, compliance, and enforcement data for facilities regulated by the National Pollutant Discharge Elimination System (NPDES) Program. The information contained in the database is generally limited to only those facilities that have been classified as "major" by EPA based on factors such as effluent design flow and physical, chemical, and locational characteristics of the discharge. Information on facilities designated as "minor" is not required to be entered into the PCS database.

The data collected included 1992 records of pollutant releases from facilities with primary SIC codes 4911 and 4931. Approximately 512 facilities were identified in PCS as "major" steam electric facilities. Please note that facilities that use nuclear energy to drive steam turbines are also covered in the universe evaluated under this study. An option in the PCS system called Effluent Data Statistics (EDS) was used to generate the annual loading values. For the purposes of the effluent guideline study, the EDS-derived data were subjected to numerous refinements in an attempt to overcome limitations in the database. These refinements included review of the data by monitored facilities, as arranged by the Utility Water Act Group (UWAG) and the EEI. The industry still contends, however, that the loadings of pollutants in these data are over estimated.[33] Therefore actual loadings cannot be provided in this Sector Notebook.

Table 17 provides a list of the pollutants found in the 1992 PCS data for steam electric effluents.

Table 17: List of Pollutants Reported in 1992 PCS Data from Steam Electric Facilities*

Priority Pollutant	Pollutant	Priority Pollutant	Pollutant
	Iron	X	Trichloromethane
	Chlorine	X	Beryllium
	Aluminum		Ethylene glycol
	Boron		Nitrosomorpholine, N-
	Fluoride	X	Mercury
	Boric Acid	X	Pentachlorophenol
X	Zinc	X	Silver
	Barium	X	Thallium
	Magnesium	X	Antimony
X	Copper		Molybdenum
	Ammonia		Benzonitrile
	Iron Sulfate		Titanium
	Manganese		Polychlorinated biphenyls, NOS
X	Chromium, trivalent	X	Dichloromethane
X	Nickel	X	Tetrachloroethane
X	Lead		Dibenzofuran
X	Arsenic	X	Toluene
X	Chromium		Xylene
X	Selenium		Lithium
	Bromine	X	Benzene
	Hydrogen Sulfide	X	Ethylbenzene
X	Chromium, hexavalent	X	Phenanthrene
X	Cadmium	X	Pyrene
	Vanadium	X	PCB-1254
X	Cyanide	X	PCB-1260
X	Phenol	X	Chlorophenol, 2-
	Hydrazine		

* Based on estimated data supplied by members (representing 80 facilities) of the electric utility industry.

Source: *Preliminary Data Summary for the Steam Electric Point Source Category.* U.S. Environmental Protection Agency, Office of Water, Washington, D. C. July 1996. (EPA-921-R-96-010).

IV.C Available Air Emissions Data for the Fossil Fuel Electric Power Generation Industry

Three existing sources of data for estimating the releases to the air from the fossil fuel electric power generation industry were identified. The following sections discuss the available data and associated limitations.

IV.C.1 Annual Emissions Estimated by the Department of Energy, Energy Information Administration

Emissions data for traditional utility steam electric facilities that generate 10 or more megawatts electricity using fossil fuels are derived or obtained directly from information collected in an annual survey by the DOE EIA. This survey (Form EIA-767) is a restricted-universe census used to collect boiler-specific data from almost 900 electric utility power plants. The emissions are calculated based on fuel consumption data and using emission factors from the EPA report AP-42, *Compilation of Air Pollutant Emission Factors* and reduction factors for control equipment, where applicable. The CO_2 emissions are estimated using additional information about fuel quality. Table 18 provides the estimated 1995 emissions for utility fossil fuel steam electric generating units that generate 10 or more megawatts electricity.

Table 18: Estimated 1995 Emissions From Fossil Fuel Steam Electric Generating Units at Electric Utilities by Fuel Type (thousand short tons)

Fuel	Net Generation (thousand megawatts)	SO_2	NO_X	CO_2
Coal	1,652,914	11,248	6,508	1,752,527
Gas	307,306	1	533	161,969
Petroleum	60,844	321	92	50,878

Source: *Electric Power Annual 1995, Volume 2.* Energy Information Administration, Department of Energy, Washington, DC. DOE/EIA-0348(95)/2. December 1996.

As indicated in the table, the majority of the emissions from utility fossil fuel steam electric generating units come from coal-burning facilities. This is due in part because there is more coal-fired capacity than other fossil-fueled capacity in use. SO_2 emissions are higher in coal-burning facilities due to the higher sulfur content in coals than in other fuels. The average sulfur content in coals ranges from 0.3 percent in the West to approximately 2.5 percent in the East. Petroleum burned at utility power plants ranges from almost no sulfur to about 3.5 percent. The amount of sulfur contained in natural gas is relatively small.

The Form EIA-767 does not collect data for facilities employing internal combustion engines, gas turbines, or combined-cycle systems or steam electric plants generating less than 10 megawatts electricity. The EIA conducted a study in 1991 to estimate air emissions from these generating units, using a methodology similar to that used on the larger steam electric facilities. The study indicated that emissions of SO_2, NO_X, and CO_2 are less than 0.1, 1.2, and 1.1 percent, respectively, of total utility air emissions.[34]

The EIA collects similar fuel consumption and quality information for nonutility power producers. However, EIA provides only aggregate statistics on estimated emissions for all fuels (fossil and renewable energy sources) and does not separate out emissions for fossil-fueled facilities. These statistics are not provided in this document since the capacity of nonutility generation using nonrenewable energy sources is large.

IV.C.2 AIRS Database Annual Estimated Releases for the Electric Power Generation Industry

The Aerometric Information Retrieval System (AIRS) is an air pollution data delivery system managed by the Technical Support Division in EPA's Office of Air Quality Planning and Standards (OAQPS), located in Research Triangle Park, North Carolina. The AIRS is a national repository of data related to air pollution monitoring and control. It contains a wide range of information related to stationary sources of air pollution, including the emission of a number of air pollutants that may be of concern within a particular industry. States are the primary suppliers of data to AIRS. Data are used to support monitoring, planning, tracking, and enforcement related to implementation by EPA staff, the scientific community, other countries, and the general public. The following criteria pollutant emissions and estimated TRI pollutant release data for the fossil fuel electric power generation industry were extracted from this database.

AIRS Estimated Criteria Pollutant Emissions

The AIRS database contains data on criteria pollutants: CO, NO_X, particulate matter (PM) of 10 microns or less (PM10), total particulate emissions (PT), SO_2, and VOCs. Criteria pollutant releases for the fossil fuel electric power generation industry were accessed using SIC codes 4911 and 4931. It should be noted that accessing the data using SIC codes does not allow the segregation of emissions for facilities that use fossil fuels from facilities that use nuclear, renewable, or a combination of fuels. Therefore, the annual emissions taken from the AIRS database will overestimate the emissions from the fossil fuel subsector of the power generation industry. Table 19

presents the criteria pollutant data available for this industry. Pollutant releases for other industries are also included in the table.

Table 19: Annual Air Pollutant Releases (tons/year)

Industry Sector	CO	NO_2	PM_{10}	PT	SO_2	VOC
Metal Mining	4,670	39,849	63,541	173,566	17,690	915
Nonmetal Mining	25,922	22,881	40,199	128,661	18,000	4,002
Lumber and Wood Production	122,061	38,042	20,456	64,650	9,401	55,983
Furniture and Fixtures	2,754	1,872	2,502	4,827	1,538	67,604
Pulp and Paper	566,883	358,675	35,030	111,210	493,313	127,809
Printing	8,755	3,542	405	1,198	1,684	103,018
Inorganic Chemicals	153,294	106,522	6,703	34,664	194,153	65,427
Organic Chemicals	112,410	187,400	14,596	16,053	176,115	180,350
Petroleum Refining	734,630	355,852	27,497	36,141	619,775	313,982
Rubber and Misc. Plastics	2,200	9,955	2,618	5,182	21,720	132,945
Stone, Clay and Concrete	105,059	340,639	192,962	662,233	308,534	34,337
Iron and Steel	1,386,461	153,607	83,938	87,939	232,347	83,882
Nonferrous Metals	214,243	31,136	10,403	24,654	253,538	11,058
Fabricated Metals	4,925	11,104	1,019	2,790	3,169	86,472
Electronics and Computers	356	1,501	224	385	741	4,866
Motor Vehicles, Bodies, Parts and Accessories	15,109	27,355	1,048	3,699	20,378	96,338
Dry Cleaning	102	184	3	27	155	7,441
Transportation	128,625	550,551	2,569	5,489	8,417	104,824
Metal Casting	116,538	11,911	10,995	20,973	6,513	19,031
Pharmaceuticals	6,586	19,088	1,576	4,425	21,311	37,214
Plastic Resins and Synthetic Fibers	16,388	41,771	2,218	7,546	67,546	74,138
Textiles	8,177	34,523	2,028	9,479	43,050	27,768
Fossil Fuel ElectricPower Generation	366,208	5,986,757	140,760	464,542	13,827,511	57,384
Ship Building and Repair	105	862	638	943	3,051	3,967

Source: U.S. EPA Office of Air and Radiation, AIRS Database, 1997.

AIRS Estimated TRI Pollutant Emissions

Data were collected from the AIRS database by the EPA Office of Pollution Prevention and Toxics, Environmental Assistance Division, Toxics Release Inventory Branch in support of the TRI expansion project discussed

previously. The data set that was downloaded included the most recent data available for each facility up to and including 1995 data. The data presented in Table 20 are estimates of TRI releases based on air releases reported in the AIRS Facility Subsystem (AFS) from facilities within SIC codes 4911 and 4931. The data contain quantities of directly reported TRI chemicals, as well as quantities of additional TRI chemicals extrapolated from reported releases of PM and VOCs. The PM and VOC releases were matched with chemical profiles contained in the SPECIATE database (Version 1.5). The SPECIATE is a computerized format of the EPA Air Emissions Species Manual and is available for download from the Clearing House of Inventory and Emissions Factors (CHIEFs). The data presented are based only on apportionment of "original" species profiles in the SPECIATE database -- those species profiles that were developed specifically for the source of the release where it has been applied. Despite the use of only the highest quality profiles in the SPECIATE database, these data should only be used as a preliminary indication of potential releases and not as actual air releases. These data have been provided for illustrative purposes only and should not be used in comparisons with other release data.

IV.C.3 Hazardous Air Pollutant Emissions Estimates for Fossil Fuel Electric Utility Steam Generating Units

Estimates of hazardous air pollutant (HAP) emissions from fossil fuel electric utility steam generating units have been developed by OAQPS and are reported in a report entitled, *Study of Hazardous Air Pollutant Emissions from Electric Utility Steam Generating Units - Interim Final Report* (Volumes 1-3).[35] These estimates are based on emissions test data from 52 units obtained from extensive emission tests by the EPRI, DOE, the Northern States Power Company, and EPA. The testing program covered a wide range of facility types with a variety of control scenarios. Therefore, the data are considered to be generally representative of fossil fuel utility steam electric generating units as a whole. This study estimated the average annual emissions for each of 684 power plants. A total of 67 HAPs were identified in the emission testing program as potentially being emitted from these facilities.

It should be noted that the report states that because of the small sample sizes for specific boiler types and control scenarios, there are uncertainties in the data. Therefore, the data for individual plants may either underestimate or overestimate the actual emissions. According to the report, the average annual emissions estimates will be roughly within a factor of plus or minus three of the actual annual emissions. However, it is recognized that the analysis had numerous limitations, such as not including data on potential upsets or unusual operating conditions, and it is possible that the range of

uncertainty is greater. Tables 21, 22, and 23 present data on estimated inorganic HAPs from coal-fired, oil-fired, and gas-fired utility steam electric facilities. Tables 24, 25, and 26 present data on estimated organic HAPs from coal-fired, oil-fired, and gas-fired utility steam electric facilities.

Table 20: Estimated Releases of TRI Chemicals *		
CAS NO.	Chemical Name	Total Releases (pounds per year)
71556	1,1,1-Trichloroethane (Methyl chloroform)	52,923,638
79005	1,1,2-Trichloroethane	422,954
95636	1,2,4-Trimethylbenzene	264,682
106934	1,2-Dibromoethane (Ethylene dibromide)	1,820,797
95501	1,2-Dichlorobenzene	22,292
107062	1,2-Dichloroethane (Ethylene dichloride)	35,222,942
106990	1,3-Butadiene	7,443,883
541731	1,3-Dichlorobenzene	672
106467	1,4-Dichlorobenzene	378,018
112345	2-(2-Butoxyethoxy)ethanol	103,100
124174	2-(2-Butoxyethoxy)ethanol acetate	0
111900	2-(2-Ethoxyethoxy)ethanol	885,978
111773	2-(2-Methoxyethoxy)ethanol	0
111762	2-Butoxyethanol	21,929,191
110805	2-Ethoxyethanol	998,125
111159	2-Ethoxyethyl acetate	111,202
109864	2-Methoxyethanol	60
90437	2-Phenylphenol	8,507
101779	4,4'-Methylenedianiline	43
75070	Acetaldehyde	2,010,699
107028	Acrolein	1,528,324
79107	Acrylic acid	3,657
107131	Acrylonitrile	783,041
7429905	Aluminum (fume or dust)	75,792,629
7664417	Ammonia	43,518,590
62533	Aniline	311,982
120127	Anthracene	139,265
7440360	Antimony	1,789,097
7440382	Arsenic	9,329,119
1332214	Asbestos (friable)	8,123
7440393	Barium	1,435,995
56553	Benz(a)anthracene	1,839
71432	Benzene	149,967,605
218019	Benzo(a)phenanthrene	1,609
50328	Benzo(a)pyrene	1,381
100447	Benzyl chloride	0
7440417	Beryllium	10,997
92524	Biphenyl	85,493
7726956	Bromine	949,230
141322	Butyl acrylate	11,240
123728	Butylaldehyde	110,921
7440439	Cadmium	13,733,816

Table 20 (continued): Estimated Releases of TRI Chemicals*		
CAS NO.	Chemical Name	Total Releases (Pounds per Year)
75150	Carbon disulfide	27,330,674
56235	Carbon tetrachloride	81,376
7782505	Chlorine	71,501,754
108907	Chlorobenzene	171,894
75456	Chlorodifluoromethane (HCFC-22)	162,070
75003	Chloroethane (Ethyl chloride)	31,182,710
67663	Chloroform	13,340
74873	Chloromethane (Methyl chloride)	178,484
126998	Chloroprene	57,294
75729	Chlorotrifluoromethane (CFC-13)	9,053
7440473	Chromium	2,632,999
7440484	Cobalt	211,262
7440508	Copper	3,058,579
8001589	Creosote	0
1319773	Cresol (mixed isomers)	239,994
98828	Cumene	725,684
110827	Cyclohexane	96,418,561
108930	Cyclohexanol	6,031
84742	Dibutyl phthalate	1,248,555
75718	Dichlorodifluoromethane (CFC-12)	97,414
75092	Dichloromethane (Methylene chloride)	1,414,455,336
76142	Dichlorotetrafluoroethane (CFC-114)	5,847
131113	Dimethyl phthalate	669,536
106898	Epichlorohydrin	66,000
140885	Ethyl acrylate	117,509
100414	Ethylbenzene	68,347,539
74851	Ethylene	53,298,159
107211	Ethylene glycol	76,627
75218	Ethylene oxide	541,571
7782414	Fluorine	6,068,173
50000	Formaldehyde	61,211,875
64186	Formic acid	467,279
76131	Freon 113 [Ethane, 1,1,2-trichloro-1,2,2,-trifluoro-]	7,587,241
7647010	Hydrochloric acid	5,809,931
78842	Isobutyraldehyde	109,758
67630	Isopropyl alcohol (mfg-strong acid process)	32,059,970
7439921	Lead	72,091,837
108383	m-Xylene	32,874,142
108316	Maleic anhydride	324,171
7439965	Manganese	2,969,118
7439976	Mercury	394,924
67561	Methanol	44,028,966

Table 20 (continued): Estimated Releases of TRI Chemicals *		
CAS NO.	Chemical Name	Total Releases (Pounds per Year)
96333	Methyl acrylate	0
78933	Methyl ethyl ketone	91,926,327
108101	Methyl isobutyl ketone	20,020,683
80626	Methyl methacrylate	16,208
74953	Methylene bromide	52,241
101688	Methylenebis(phenylisocyanate) (MBI)	130
101688	Methylenebis(phenylisocyanate) (MDI)	130
76153	Monochloropentafluoroethane (CFC-115)	6,199
68122	N,N-Dimethylformamide	2,700,310
71363	n-Butyl alcohol	12,653,277
110543	n-Hexane	107,548,181
91203	Naphthalene	434,275
7440020	Nickel	7,884,920
7697372	Nitric acid	214,564
98953	Nitrobenzene	0
95476	o-Xylene	41,115,640
106423	p-Xylene	2,327,391
85018	Phenanthrene	84,032
108952	Phenol	15,017,545
7723140	Phosphorus (yellow or white)	7,980,941
85449	Phthalic anhydride	2,491,887
123386	Propionaldehyde	49,400
115071	Propylene (Propene)	45,955,707
75569	Propylene oxide	183,593
78922	sec-Butyl alcohol	990,420
7782492	Selenium	173,886
7440224	Silver	289,686
100425	Styrene	28,155,503
7664939	Sulfuric acid	1,320,503
75650	Tert-Butyl alcohol	4,660
127184	Tetrachloroethylene (Perchloroethylene)	14,623,885
7440280	Thallium	<1
108883	Toluene	421,985,085
79016	Trichloroethylene	27,838,379
75694	Trichlorofluoromethane (CFC-11)	1,315,878
7440622	Vanadium (fume or dust)	7,256,367
108054	Vinyl acetate	1,011,166
75014	Vinyl chloride	10,200,715
1330207	Xylene (mixed isomers)	191,013,108
7440666	Zinc (fume or dust)	20,353,738

* Data in this table should not be used for comparison with other environmental data from other sources. It is only provided for illustrative purposes. Please note the limitations of the data explained in the text.

Table 21: Median Emission Factors Determined From Test Report Data, and Total 1990 and 2010 HAP Emissions, Projected With the Emission Factor Program for Inorganic HAPs From Coal-Fired Units *

Coal-Fired Units: Inorganic HAPs	Number of Stack Factors: PM Control **	Median Stack Factor: PM Control (lb/trillion Btu)***	Number of Stack Factors: PM and SO_2 Control**	Median Stack Factor: PM and SO_2 Control (lb/trillion Btu)**	Estimated Total 1990 Emissions (tons)	Estimated Total 2010 Emissions (tons)
Antimony	7	1.4	4	0.13	11	14
Arsenic	21	2.9	8	0.9	54	62
Beryllium	12	0.45	5	0.14	6.6	7.6
Hydrogen Chloride	15	21,000	9	1,290	137,000	150,000
Hydrogen Cyanide (HCN) †	All HCN factors were combined	Number of Factors: 5	Median Factor: 28 lb/trillion Btu		240	320
Hydrogen Fluoride	14	4,200	6	106	19,500	25,600
Cadmium	18	0.72	9	1	1.9	2.3
Chromium	22	8.4	10	4	70	83
Cobalt	10	2.7	6	1	21	27
Lead	21	4.8	9	5.8	72	83
Manganese	21	15	9	15	180	232
Mercury	20	3.9	10	3.4	51	65
Nickel	21	8.3	10	5.2	48	57
Phosphorous (P)††	All P Factors were Combined	Number of Factors: 10	Median Factor 31 lb/trillion Btu		270	350
Selenium	19	62	9	8	190	230

* Compounds are listed in the following sequence: inorganic, organic, and dioxin/furan/polycyclic aromatic hydrocarbons (PAHs). Median emission factors were determined from organic HAP concentrations at the stack, control device outlet, or boiler outlet when at least one of typically three measured flue gas concentrations was detected.

** Stack factors for inorganic HAPs were taken from test reports when at least one of typically three measured flue gas concentrations was detected. These factors were not used to develop the estimated emissions.

*** Since the inorganic emissions were not directly estimated from stack factors, total emissions of inorganic HAPs projected with the computer program and from median stack factors will vary.

† Nationwide hydrogen cyanide emissions were detected from stack emission factors and not from emission median factors.

†† Nationwide phosphorous emissions were detected from stack emission factors and not from emission median factors.

Source: *Study of Hazardous Air Pollutant Emission from Electric Utility Steam Generating Units--Interim Final Report, Volumes 1-3.* U.S. Environmental Protection Agency, Office of Air Quality Planning and Standards. Research Triangle Park, NC. EPA-453/R-96-013b. October 1996.

Table 22: Median Emission Factors Determined From Test Report Data, and Total 1990 and 2010 HAP Emissions, Projected With the Emission Factor Program for Inorganic HAPs From Oil-Fired Units*

Oil-Fired Units: Inorganic HAPs	Number of Stack Factors: PM Control **	Median Stack Factor: PM Control (lb/trillion Btu)***	Number of Stack Factors: No PM Control **	Median Stack Factor: No PM Control (lb/trillion Btu) ***	Estimated Total 1990 Emissions (tons)	Estimated Total 2010 Emissions (tons)
Arsenic	2	0.32	8	5.3	5	2.5
Beryllium	2	0.33	4	0.21	0.45	0.23
Cadmium	1	0.32	9	1.6	1.7	0.87
Chromium	4	3.7	8	5.7	4.7	2.4
Cobalt	2	6.1	3	27	20.3	10.3
Hydrogen Chloride	4	2900	2	2300	2870	1456
Hydrogen Fluoride	3	230	2	140	144	73
Lead	3	2.6	8	9	10.6	5.3
Manganese	3	15	9	16	9.5	4.8
Mercury	3	0.24	3	0.48	0.25	0.13
Nickel	4	180	9	410	389	197
Phosphorous (P)†	All P Factors were Combined	Number of Factors: 3	Median Factor 110 lb/trillion Btu		68	34
Selenium	1	1.4	8	3.8	1.7	0.84

* Compounds are listed in the following sequence: inorganic, organic, and dioxin/furan/polycyclic aromatic hydrocarbons (PAHs). Median emission factors were determined from organic HAP concentrations at the stack, control device outlet, or boiler outlet when at least one of typically three measured flue gas concentrations was detected.

** Stack factors for inorganic HAPs were taken from test reports when at least one of typically three measured flue gas concentrations was detected. These factors were not used to develop the estimated emissions.

*** Since the inorganic emissions were not directly estimated from stack factors, total emissions of inorganic HAPs projected with the computer program and from median stack factors will vary.

† Nationwide phosphorous emissions were detected from stack emission factors and not from emission median factors.

Source: *Study of Hazardous Air Pollutant Emission from Electric Utility Steam Generating Units--Interim Final Report Volumes 1-3.* U.S. Environmental Protection Agency, Office of Air Quality Planning and Standards. Research Triangle Park, NC. EPA-453/R-96-013b. October 1996.

Table 23: Median Emission Factors Determined From Test Report Data, and Total 1990 and 2010 HAP Emissions, Projected With the Emission Factor Program for Inorganic HAPs From Gas-Fired Units *

Gas-Fired Units: Inorganic HAPs	Number of Stack Factors: No PM Control	Median Stack Factor: No PM Control (lb/trillion Btu)	Estimated Total 1990 Emissions (tons)	Estimated Total 2010 Emissions (tons)
Arsenic	2	0.14	0.16	0.25
Cadmium	1	0.044	0.054	0.086
Chromium	2	0.96	1.2	1.9
Cobalt	1	0.12	0.14	0.23
Lead	2	0.37	0.44	0.68
Manganese	2	0.3	0.37	0.59
Mercury	2	<0.38	0.0016	0.0024
Nickel	2	2.3	2.3	3.5
Phosphorous	1	2.2	1.3	2

* Compounds are listed in the following sequence: inorganic, organic, and dioxin/furan/polycyclic aromatic hydrocarbons (PAHs). Median emission factors were determined from organic HAP concentrations at the stack, control device outlet, or boiler outlet when at least one of typically three measured flue gas concentrations was detected.

Source: *Study of Hazardous Air Pollutant Emission from Electric Utility Steam Generating Units--Interim Final Report Volumes 1-3*. U.S. Environmental Protection Agency, Office of Air Quality Planning and Standards. Research Triangle Park, NC. EPA-453/R-96-013b. October 1996.

Table 24: Median Emission Factors From Test Report Data, and Total 1990 and 2010 HAP Emissions, Projected With the Emission Factor Program for Organic HAPs From Coal-Fired Units

Coal-Fired Units: Organic HAP	Number of Emission Factors	Median Emission Factor (lb/trillion Btu)	Computer Program: 1990 Total Tons	Computer Program: 2010 Total Tons
1,1,2-Trichloroethane	1	4.7	40	53
2-chloroacetophenone	3	0.29	2.4	3.2
2,4 -Dinitro toluene	3	0.015	0.13	0.17
Acetaldehyde	12	6.8	58	76
Acetophenone	7	0.68	5.8	7.7
Acrolein	6	3.3	28	37
Benzene	20	2.5	21	28
Benzyl chloride	1	0.0056	0.048	0.063
Bis(2-ethylhexyl) phthalate	9	4.1	35	46
Bromoform	1	6.6	57	75
Carbon disulfide	8	4.3	37	48
Carbon tetrachloride	2	3.3	28	37
Chlorobenzene	2	3.2	27	36
Chloroform	2	3.2	28	36
Cumene	1	0.29	2.5	3.2
Dibutyl phthalate	5	2.8	24	32
Ethylbenzene	5	0.40	3.5	4.6
Ethylchloride	1	2.4	20	27
Methylchloroform	4	3.4	29	38
Ethylenedichloride	3	3.1	27	35
Formaldehyde	15	4.0	35	45
Hexane	2	0.82	6.9	9.1
Hexachlorobenzene	1	0.079	0.68	0.89
Isophorone	2	24	200	270
Methylbromide	6	0.88	7.7	10
Methylchloride	3	5.9	51	67
Methylethylketone	6	8.0	69	90
Methyliodide	1	0.40	3.4	4.5
Methylisobutyl ketone	3	4.9	42	53
Methylmethacrylate	1	1.1	9.3	12
Methyltertbutylether	1	1.4	12	16
Methylenechloride	5	13	110	150

Table 24 (continued) : Median Emission Factors From Test Report Data, and Total 1990 and 2010 HAP Emissions, Projected With the Emission Factor Program for Organic HAPs From Coal-Fired Units

Coal-Fired Units: Organic HAP	Number of Emission Factors	Median Emission Factor (lb/trillion Btu)	Computer Program: 1990 Total Tons	Computer Program: 2010 Total Tons
n-nitrosodimethylamine	1	0.68	5.9	7.7
Naphthalene	11	0.77	6.6	8.7
n,p-cresol	2	0.68	5.8	7.6
o-cresol	3	1.7	14	19
p-cresol	1	0.95	8.2	11
perylene	1	0.075	0.65	0.85
Pentachlorophenol	1	0.0082	0.070	0.093
Phenol	10	6.1	52	69
Phthalicanhydride	1	4.9	42	56
Propionaldehyde	4	10	89	120
Quinoline	1	0.053	0.46	0.61
Styrene	7	3.1	27	35
Tetrachloroethylene (Perchloroethylene)	5	3.1	27	35
Toluene	17	3.6	31	41
Trans 1,3-dichloropropene	1	4.7	40	53
Trichloroethylene	1	3.1	27	35
Vinyl acetate	1	0.42	3.5	4.6
Vinylidnechloride	2	9.7	84	110
Xylene	2	4.7	40	53
o-xylene	5	0.82	6.9	9.1
m,p-xylene	8	1.5	13	17
Total TEQ* for 2,3,7,8-tetra-chlorodibenzo-p-dioxin	-	-	1.5×10^{-4}	2.0×10^{-4}
2,3,7,8-tetrachloride-benzo-p-dioxin	4	1.6×10^{-6}	1.4×10^{-5}	1.9×10^{-5}
1,2,3,7,8-pentachlorodi-benzo-p-dioxin	3	4.3×10^{-6}	3.7×10^{-5}	4.8×10^{-5}
1,2,3,4,7,8-hexachlorodi-benzo-p-dioxin	4	9.7×10^{-6}	8.3×10^{-5}	1.1×10^{-4}
1,2,3,6,7,8-hexachlorodi-benzo-p-dioxin	4	5.8×10^{-6}	5.0×10^{-5}	6.6×10^{-5}
1,2,3,7,8,9-hexachlorodi-benzo-p-dioxin	4	7.3×10^{-6}	6.3×10^{-5}	8.3×10^{-5}
1,2,3,4,6,7,8-heptachlorodi-benzo-p-dioxin	9	5.7×10^{-6}	4.9×10^{-5}	6.5×10^{-5}
Heptachlorodi-benzo-p-dioxin	6	1.1×10^{-4}	9.2×10^{-4}	1.2×10^{-3}
Hexachlorodi-benzo-p-dioxin	8	2.4×10^{-5}	2.1×10^{-4}	2.7×10^{-4}
Octachlorodi-benzo-p-dioxin	6	5.8×10^{-5}	5.0×10^{-4}	6.6×10^{-4}
Pentachlorodi-benzo-p-dioxin	6	9.8×10^{-6}	8.5×10^{-5}	1.1×10^{-4}

Table 24 (continued) : Median Emission Factors From Test Report Data, and Total 1990 and 2010 HAP Emissions, Projected With the Emission Factor Program for Organic HAPs From Coal-Fired Units

Coal-Fired Units: Organic HAP	Number of Emission Factors	Median Emission Factor (lb/trillion Btu)	Computer Program: 1990 Total Tons	Computer Program: 2010 Total Tons
Tetrachloride-benzo-p-dioxin	9	7.1×10^{-6}	6.1×10^{-5}	8.0×10^{-5}
2,3,7,8-tetrachloride-benzofuran	8	3.9×10^{-6}	3.4×10^{-5}	4.5×10^{-5}
1,2,3,7,8-pentachlorodi-benzofuran	5	2.4×10^{-6}	2.1×10^{-5}	2.8×10^{-5}
2,3,4,7,8-pentachlorodi-benzofuran	5	1.0×10^{-5}	9.0×10^{-5}	1.2×10^{-4}
1,2,3,4,7,8-hexachlorodi-benzofuran	6	1.3×10^{-5}	1.1×10^{-4}	1.5×10^{-4}
1,2,3,6,7,8-hexachlorodi-benzofuran	5	4.0×10^{-6}	3.4×10^{-5}	4.5×10^{-5}
1,2,3,7,8,9-hexachlorodi-benzofuran	4	8.5×10^{-6}	7.3×10^{-5}	9.6×10^{-5}
2,3,4,6,7,8-hexachlorodi-benzofuran	5	1.6×10^{-5}	1.4×10^{-4}	1.8×10^{-4}
1,2,3,4,6,7,8-heptachlorodi-benzofuran	8	2.0×10^{-5}	1.7×10^{-4}	2.2×10^{-4}
1,2,3,4,7,8,9-heptachlorodi-benzofuran	4	1.7×10^{-4}	1.5×10^{-3}	2.0×10^{-3}
Heptachlorodi-benzofuran	8	2.4×10^{-5}	2.1×10^{-4}	2.7×10^{-4}
Hexachlorodi-benzofuran	8	1.9×10^{-5}	1.6×10^{-4}	2.1×10^{-4}
Octachlorodi-benzofuran	10	1.7×10^{-5}	1.4×10^{-4}	1.9×10^{-4}
Pentachlorodi-benzofuran	9	1.8×10^{-5}	1.6×10^{-4}	2.1×10^{-4}
Tetrachloride-benzofuran	10	1.2×10^{-5}	1.0×10^{-4}	1.3×10^{-4}
1-methylnaphthalene	2	0.0085	0.076	0.1
2-chloronaphthalene	2	0.04	0.35	0.46
2-methylnaphthalene	6	0.024	0.2	0.26
Acenapthene	6	0.008	0.07	0.09
Acenapthylene	5	0.0042	0.036	0.047
Anthracene	4	0.0042	0.036	0.047
Benz(a)anthracene	4	0.0021	0.018	0.002
Benzo(a)pyrene	6	0.001	0.0088	0.012
Benzo(e)pyrene	1	0.0012	0.01	0.014
Benzo(b)fluoranthene	1	0.0081	0.07	0.092
Benzo(b+k)fluoranthene	1	0.0016	0.014	0.018
Benzo(k)fluoranthene	1	0.0036	0.031	0.04
Benzo(g,h,i)perylene	2	0.0032	0.028	0.036
Biphenyl	1	0.34	3.1	4
Chrysene	4	0.0026	0.022	0.03
Dibenzo(a,h)anthacene	1	0.0003	0.003	0.004
Fluoranthene	6	0.007	0.06	0.082

Table 24 (continued) : Median Emission Factors From Test Report Data, and Total 1990 and 2010 HAP Emissions, Projected With the Emission Factor Program for Organic HAPs From Coal-Fired Units

Coal-Fired Units: Organic HAP	Number of Emission Factors	Median Emission Factor (lb/trillion Btu)	Computer Program: 1990 Total tons	Computer Program: 2010 Total tons
Fluorene	5	0.013	0.11	0.15
Indeno(1,2,3-c,d)pyrene	2	0.0064	0.054	0.072
Phenanthrene	7	0.032	0.031	0.36
Pyrene	4	0.009	0.081	0.103

* Toxic equivalent emissions.

Source: *Study of Hazardous Air Pollutant Emission from Electric Utility Steam Generating Units--Interim Final Report, Volumes 1-3.* U.S. Environmental Protection Agency, Office of Air Quality Planning and Standards. Research Triangle Park, NC. October 1996. EPA-453/R-96-013b.

Table 25: Median Emission Factors From Test Report Data, and Total 1990 and 2010 HAP Emissions, Projected With the Emission Factor Program for Organic HAPs From Oil-Fired Units

Oil-Fired Units: Organic HAPs	Number of Emission Factors	Median Emission Factor (lb/trillion Btu)	Computer Program: 1990 Total Tons	Computer Program: 2010 Total Tons
Acetaldehyde	1	8.2	5	2.6
Benzene	6	1.4	0.88	0.45
Ethylbenzene	2	0.49	0.29	0.15
Formaldehyde	9	30	19	9.5
Methylchloroform	3	7.6	4.6	2.4
Methylenechloride	2	32	20	10
Naphthalene	4	0.33	0.21	0.1
Phenol	2	24	15	7.5
Tetrachloroethylene (Perchloroethylene)	1	0.55	0.34	0.17
Toluene	6	8	4.9	2.5
Vinyl acetate	2	5.2	3.2	1.6
o-Xylene	1	0.84	0.51	0.26
m,p-Xylene	2	1.4	0.82	0.42
Total TEQ* for 2,3,7,8-tetra-chlorodibenzo-p-dioxin	--	--	1.1×10^{-5}	5.4×10^{-6}
2,3,7,8-tetrachloride-benzo-p-dioxin	1	6.5×10^{-6}	4.5×10^{-6}	2.0×10^{-6}
1,2,3,7,8-pentachlorodi-benzo-p-dioxin	2	5.8×10^{-6}	3.5×10^{-6}	1.8×10^{-6}
1,2,3,4,7,8-hexachlorodi-benzo-p-dioxin	1	1.2×10^{-5}	7.6×10^{-6}	3.9×10^{-6}
1,2,3,6,7,8-hexachlorodi-benzo-p-dioxin	2	5.4×10^{-5}	3.3×10^{-6}	1.7×10^{-6}
1,2,3,7,8,9-hexachlorodi-benzo-p-dioxin	2	8.3×10^{-6}	5.1×10^{-6}	2.6×10^{-6}
1,2,3,4,6,7,8-heptachlorodi-benzo-p-dioxin	2	2.0×10^{-5}	1.2×10^{-5}	6.2×10^{-6}
Heptachlorodi-benzo-p-dioxin	2	2.0×10^{-5}	1.2×10^{-5}	6.2×10^{-6}
Hexachlorodi-benzo-p-dioxin	2	8.1×10^{-6}	5.0×10^{-6}	2.5×10^{-6}
Octachlorodi-benzo-p-dioxin	1	2.3×10^{-5}	1.4×10^{-5}	7.3×10^{-6}
Pentachlorodi-benzo-p-dioxin	2	5.8×10^{-6}	3.5×10^{-6}	1.8×10^{-6}
Tetrachloride-benzo-p-dioxin	2	5.7×10^{-6}	3.4×10^{-6}	1.8×10^{-6}
2,3,7,8-tetrachloride-benzofuran	2	4.6×10^{-6}	2.9×10^{-6}	1.4×10^{-6}
1,2,3,7,8-pentachlorodi-benzofuran	2	4.3×10^{-6}	2.6×10^{-6}	1.3×10^{-6}
2,3,4,7,8-pentachlorodi-benzofuran	2	4.8×10^{-6}	3.0×10^{-6}	1.5×10^{-6}
1,2,3,4,7,8-hexachlorodi-benzofuran	2	6.1×10^{-6}	3.7×10^{-6}	1.9×10^{-6}
1,2,3,6,7,8-hexachlorodi-benzofuran	2	3.8×10^{-6}	2.3×10^{-6}	1.2×10^{-6}

Table 25 (continued): Median Emission Factors From Test Report Data, and Total 1990 and 2010 HAP Emissions, Projected With the Emission Factor Program for Organic HAPs From Oil-Fired Units

Oil-Fired Units: Organic HAPs	Number of Emission Factors	Median Emission Factor (lb/trillion Btu)	Computer Program: 1990 Total Tons	Computer Program: 2010 Total Tons
1,2,3,7,8,9-hexachlorodi-benzofuran	2	5.8×10^{-6}	3.5×10^{-6}	1.8×10^{-6}
2,3,4,6,7,8-hexachlorodi-benzofuran	1	4.8×10^{-6}	3.0×10^{-6}	1.4×10^{-6}
1,2,3,4,6,7,8-heptachlorodi-benzofuran	1	9.4×10^{-6}	5.7×10^{-6}	3.0×10^{-6}
1,2,3,4,7,8,9-heptachlorodi-benzofuran	1	1.0×10^{-5}	6.2×10^{-6}	3.2×10^{-6}
Heptachlorodi-benzofuran	1	1.5×10^{-6}	8.8×10^{-7}	4.4×10^{-7}
Hexachlorodi-benzofuran	2	9.6×10^{-6}	5.8×10^{-6}	3.0×10^{-6}
Octachlorodi-benzofuran	1	1.0×10^{-5}	6.2×10^{-6}	3.2×10^{-6}
Pentachlorodi-benzofuran	2	7.3×10^{-6}	4.4×10^{-6}	2.2×10^{-6}
Tetrachloride-benzofuran	2	5.0×10^{-6}	3.1×10^{-6}	1.5×10^{-6}
2-methylnaphthalene	4	0.017	0.01	0.0052
Acenaphthene	2	0.38	0.22	0.11
Acenaphthylene	1	0.017	0.01	0.0052
Anthracene	2	0.015	0.0093	0.0047
Benz(a)anthracene	3	0.03	0.018	0.0092
Benzo(b+k)fluoranthene	2	0.033	0.02	0.01
Benzo(g,h,i)perylene	2	0.021	0.013	0.0065
Chrysene	3	0.021	0.013	0.0066
Dibenzo(a,h)anthracene	2	0.0081	0.005	0.0025
Fluoranthene	6	0.016	0.0097	0.0049
Fluorene	5	0.021	0.013	0.0065
Indeno(1,2,3-c,d)pyrene	2	0.024	0.014	0.0073
Nitrobenzofluoranthene	1	0.015	0.0092	0.0047
Nitrochrysene/benzanthracene	1	0.016	0.0098	0.005
Phenanthrene	9	0.025	0.015	0.0077
Pyrene	6	0.037	0.022	0.011

* Toxic equivalent emissions

Source: *Study of Hazardous Air Pollutant Emission from Electric Utility Steam Generating Units--Interim Final Report, Volumes 1-3.* U.S. Environmental Protection Agency, Office of Air Quality Planning and Standards. Research Triangle Park, NC. October 1996. EPA-453/R-96-

Table 26: Median Emission Factors From Test Report Data, and Total 1990 and 2010 HAP Emissions, Projected With the Emission Factor Program for Organic HAPs From Gas-Fired Units

Gas-Fired Units: Organic HAPs	Number of Emission Factors	Median Emission Factor (lb/trillion Btu)	Computer Program: 1990 Total Tons	Computer Program: 2010 Total Tons
Benzene	1	1.4	1.8	2.7
Formaldehyde	8	35.5	55	83
Naphthalene	2	0.7	0.66	1
Toluene	2	10	13	19
2-methylnaphthalene	2	0.026	0.025	0.038
Fluoranthene	1	0.0028	0.0034	0.0055
Fluorene	1	0.0026	0.0034	0.0051
1-phenanthrene	2	0.013	0.016	0.024
Pyrene	1	0.0049	0.0061	0.0094

Source: *Study of Hazardous Air Pollutant Emission from Electric Utility Steam Generating Units--Interim Final Report, Volumes 1-3.* U.S. Environmental Protection Agency, Office of Air Quality Planning and Standards. Research Triangle Park, NC. October 1996. EPA-453/R-96-013b.

V. POLLUTION PREVENTION OPPORTUNITIES

The best way to reduce pollution is to prevent it in the first place. Some companies have creatively implemented pollution prevention techniques that improve efficiency and increase profits while at the same time minimizing environmental impacts. This can be done in many ways, such as reducing material inputs, re-engineering processes to reuse byproducts, improving management practices, and employing substitution of toxic chemicals. Some smaller facilities are able to actually get below regulatory thresholds just by reducing pollutant releases through aggressive pollution prevention policies.

The Pollution Prevention Act of 1990 established a national policy of managing waste through source reduction, which means preventing the generation of waste. The Pollution Prevention Act also established as national policy a hierarchy of waste management options for situations in which source reduction cannot be implemented feasibly. In the waste management hierarchy, if source reduction is not feasible the next alternative is recycling of wastes, followed by energy recovery, and waste treatment as a last alternative.

In order to encourage these approaches, this section provides both general and company-specific descriptions of some pollution prevention advances that have been implemented within the fossil fuel electric power generation industry. While the list is not exhaustive, it does provide core information that can be used as the starting point for facilities interested in beginning their own pollution prevention projects. This section provides summary information from activities that may be, or are being implemented by this sector. When possible, information is provided that gives the context in which the technique can be used effectively. Please note that the activities described in this section do not necessarily apply to all facilities that fall within this sector. Facility-specific conditions must be carefully considered when pollution prevention options are evaluated, and the full impacts of the change must examine how each option affects air, land and water pollutant releases.

Coal is considered the primary energy source for power generation now and in the future. Coal is relatively abundant and inexpensive. However, environmental impacts associated with coal combustion, most notably, acid rain, represent a cost to the environment and human health. This section emphasizes technologies for coal-fired electric power generation plants, but includes pollution prevention practices that apply to other fossil fuel electric plants as well. Many of the technologies and practices may be employed in existing plants, in the repowering of existing plants, and in the design and construction of new plants.

V.A Pollution Prevention Technologies in the DOE Clean Coal Technology Demonstration Program

The DOE is charged with protecting the Nation's energy interests. In recognition of the vital role of coal as a sustainable energy source, DOE vigorously researches and promotes ways to reduce the environmental impacts associated with coal combustion under the Clean Coal Technology Demonstration (CCT) Program. Specific goals of the CCT Program include (1) increasing the efficiency of electricity production and (2) enhancing the efficient and cost effective use of U.S. coal reserves, while ensuring achievement of national and environmental goals.

One way in which the CCT Program progresses towards these goals is by building a portfolio of advanced, coal-based technology demonstration projects. Included in the portfolio are technologies that result in improved efficiency with fewer environmental consequences. The technologies demonstrated under the CCT Program include commercially viable processes, as well as projects whose commercial viability is still being explored. These technologies may be categorized as (1) power systems, (2) environmental control devices, and (3) clean coal processing. Pollution prevention technologies being demonstrated under the CCT Program are included under the categories labeled "power systems" and "clean coal processing." Technologies categorized as "environmental control devices" may not be considered pollution prevention technologies; however, they may enable the recovery of pollutants for subsequent reuse/resale in products.

A brief discussion of emerging power systems and coal processing technologies being demonstrated under the CCT Program is provided below. DOE's *Clean Coal Technology Demonstration Program, Program Update 1995* (April 1996) provides a more detailed discussion.

V.A.1 Emerging Technologies

Pollution prevention opportunities in advanced coal-fired power systems are realized by the increase in overall efficiency of the combustion (electricity produced per amount of fuel) resulting in the reduction of environmental pollutants released. Efficiency of a technology is determined by the portion of energy in fuel that is converted into electricity. Thus, the process of combustion and heat transfers are critical variables. In considering advanced technologies, one must consider the environmental transfer of wastes from one media to another. Unless the transfer represents a more manageable form of the waste, there may be little or no environmental gain.

A brief description of power system technologies is provided below. While none of the technologies described are currently commercially viable, they may be in the future. Table 27 summarizes demonstration projects for power system technologies funded by DOE and participating companies.

Table 27: Summaries of Clean Coal Technologies Under DOE's Clean Coal Technology Demonstration Program

Demonstration: Pressurized Fluidized-Bed Combustion Combined-cycle, Tidd Project-The Ohio Power Company

Status: *Completed on the 70 MW scale, future testing on 340 MW scale planned.*
Size: *55 MW steam turbine, 15 MW gas turbine*
Efficiency: *Combustion efficiency of 99.6%. Heat rate efficiency of 33.2 percent*
Environmental Benefits: *SO_2 removal of up to 95%. Resulting NO_X emissions of 0.15-0.33lb/million Btu.*

Demonstration: Integrated Gasification Combined-cycle Repowering Project

Status: *Currently still in design stage.*
Size: *65 MW*
Projected Efficiency: *Heat efficiency of approximately 43%.*
Environmental Benefits: *Expected CO_2 reduction, improved efficiency over coal-fired plant with flue gas desulfurization.*

Demonstration: Indirect Fired Cycle-Repowering, Pennsylvania Electric Co. Warren Station, Unit No. 2

Status: *Currently still in design stage.*
Size: *62.4 MW*
Projected Heat Rate: *9,650 BTU/KWh (31.3% improvement over existing).*
Environmental Benefits: *Eliminates the need for hot gas cleanup systems.*

Demonstration: Coal Diesel Combined-Cycle Project, Arthur D. Little, Inc.

Status: *Currently in design stage.*
Size: *14 MW*
Projected Efficiency: *Heat efficiency of approximately 48%.*
Environmental Benefits: *Emissions reductions to levels of 50%-70% below NSPS.*

Demonstration: Slagging Combustor, Heavy Clean Coal Project, Alaska Industrial Development and Export Authority, Golden Valley Electric Association

Status: *Currently in construction stage.*
Size: *50 MW*
Projected Efficiency: *Projected SO_2 removal of 90%, NO_X emissions/million BTU emissions of less than 0.015 lb/million BTU, particulates of 0.0015 lb/million BTU.*
Environmental Benefits: *SO_2, NO_X, particulates emissions reductions.*

Fluidized-Bed Combustion

Fluidized bed combustion (FBC) technology includes three designs: atmospheric, pressurized, and two-stage bubbling bed. Although FBC technology is not yet widespread in the industry, it allows any kind of fuel to be burned while controlling the emission of SO_2 without the use of a flue gas scrubbing device. In the FBC process, a sorbent, such as crushed limestone, is introduced with pulverized coal in the combustion chamber. Air forced into the combustion chamber suspends the coal-limestone mixture. Sulfur, released from the coal, combines with the sorbent to form a solid waste that is relatively easy to handle and dispose of. The advantage of FBC technology is that it creates a turbulent environment conducive to a high rate of combustion and a high rate of sulfur capture and allows for lower operating temperatures than conventional boilers. Because operating temperatures are below the threshold of thermally induced NO_X formation, NO_X emissions are reduced. In addition, the operating temperature tends to be below the ash fusion range for coal, resulting in less wastes present in fireside wash waters and less frequent cleaning requirements.

Integrated Gasification Combined-cycle

In the IGCC, coal is converted into a gaseous fuel, purified, and combusted in a gas turbine generator to produce electricity. The constituents react to produce a fuel gas. Heat from the exhaust gas is recovered and used to generate steam, which produces additional electricity. Gasification is a process in which coal is introduced to a reducing atmosphere with oxygen or air and steam. In some systems, a limestone sorbent is added to the gasifier for sulfur removal. The environmental advantages of IGCC include:

- High efficiency
- Removal of nitrogen, sulfur, and particulates prior to the addition of combustion air, thereby lowering the volume of gas requiring treatment
- Sulfur in the gas is in the form of hydrogen sulfide, which is removable to a greater extent than SO_2
- NO_X removal of more than 90 percent
- Reduced CO_2 emissions compared to traditional coal-fired boilers.

Currently, gas cleanup in IGCC requires the gas to be cooled; however, hot gas cleanup systems are being developed that will remove 99.9 percent of the sulfur and result in a saleable sulfur product. The IGCC system is well suited for repowering because it can use the existing steam turbine, electrical generator, and coal-handling facilities in most cases.

Indirect-Fired Cycle

An indirect-fired cycle operates such that coal or biomass combustion products do not come in direct contact with gas turbine components. Instead, heated gases pass on the shell side of an air heater. On the tube side of the air heater, compressed gas is heated and passes through a gas turbine. The environmental advantage is that this eliminates the need for hot gas cleanup since the corrosive and abrasive fuel products do not come into direct contact with the turbines. Heat is recovered from air heater exhaust and is used to produce steam, which powers a steam turbine. In addition, corrosive gas products do not come into direct contact with the turbine, thereby eliminating the need for hot gas cleanup. Although the technology is still in the design stage, the efficiency is expected to be 20 percent greater than that of a pulverized coal plant. Furthermore, SO_2 reductions of 90 percent, as well as reduced NO_X and particulate emissions, are expected.

Integrated Gasification Fuel Cell

An integrated gasification fuel cell system consists of a coal gasifier with a gas cleanup system, a fuel cell, an inverter, and a heat recovery system. Coal gas, made through the reaction of steam, oxygen, and limestone, is introduced to a fuel cell composed of an anode and a cathode and separated by an electrolytic layer. The fuel cell converts the chemical energy of the gas to direct current electrical energy and generates heat, and an inverter converts direct current to alternating current. A heat recovery system delivers heat to a bottoming steam cycle for further generation of electricity. Pollution prevention is realized by improved emissions reduction associated with the gas cleanup system and solid waste reduction.

Coal-Fired Diesel

Diesel generators are modified to accept a coal/water slurry as a fuel source. Environmental control systems are typically installed to remove NO_X, SO_2, and particulates. The advantage of a coal-fired diesel system is that it is well suited to small generators (below 50 megawatts). In addition, it is estimated to result in emissions reduction of 50 percent below New Source Performance Standards. Similarly, coal-oil mixture technology can replace up to 50 percent of fuel oil with pulverized coal for burning in conventional oil or gas burners.

Slagging Combustor

In a slagging combustor, coal is burned at very high combustion temperatures outside the furnace cavity, and combustion gasses pass into the boiler, where

heat exchange takes place. In a conventional boiler, the ash enters the boiler and collects on boiler tubes, thus decreasing the efficiency of heat exchange. Alternatively, the high temperature of the slagging combustor causes ash to form slag, which is collected in cyclones. The advantage of the slagging combustor is that it prevents a loss in heat exchange efficiency that would occur from ash accumulation on boiler tubes.

V.A.2 Coal Processing for Clean Fuels

Pollution prevention entails removal of the pollutants from coal in the precombustion stage. This is accomplished through coal cleaning, whereby pollutants are removed without altering the solid state of the coal, or by conversions (gasification or liquefaction), which represent transformations in the state of the coal.

Coal Cleaning

Most coal cleaning occurs at the mouth of the mine. The cleaning method depends on the size of the coal pieces. Typically, coal is cleaned by pulsing currents of water through a bed of coal in a jig to separate the impurities from the coal. Coal cleaning can be achieved through physical, biological, or chemical means. Physical cleaning is the most common method and involves the separation of coals to obtain coals with lower ash content. A lower ash content helps in meeting particulate emissions standards and results in lower operating and maintenance costs associated with ash handling. Coal cleaning can also reduce the trace metal content, thus reducing trace metal content in ashes. Furthermore, cleaning is effective in removing sulfur from coal. This is sulfur that may otherwise end up as SO_2 emissions. There is a tradeoff between sulfur reduction and energy recovery.[36] It should be noted, however, that a reduction in energy recovery is associated with sulfur removal.

A study cited in a report written by the Virginia Department of Environmental Quality compared two FBC conceptual plant designs using mine-run coal versus washed coal. The washed coal facility reduced SO_2 emissions by more than 50 percent on the basis of equivalent heat input and sulfur removal. The NO_X emissions from the washed coal are about one-third lower in comparison to mine-run coal based on equivalent heat input. In addition, the washed coal facility was physically smaller, had lower installation costs, required less storage area for limestone and ash, used less water, and generated less high-volume wastes.

Coal Gasification

Gasification is the process of converting coal to a gaseous fuel—coal gas—followed by chemical cleaning. Coal gas has the benefit of burning as cleanly as natural gas. The process entails coal gas reacted with steam and an oxidant in a reducing atmosphere. If air is the oxidant, a low-BTU gas results; if oxygen is the oxidant, a medium-BTU gas results.

Mild Gasification

In mild gasification, coal is heated in a oxygen-free reactor, which produces gaseous, solid, and liquid products. The environment in the reactor drives off the condensed, volatile hydrocarbons and leaves behind carbon. The benefit of mild gasification is that it produces multiple fuels and feedstocks using medium temperature treatment of coal.

Coal Liquefaction

Hydrogen added to coal increases the fuel's ratio of hydrogen to carbon to a level similar to that of petroleum-based fuels. Coprocessing is a liquefaction process, whereby heavy petroleum residue combined with coal produces a liquid fuel. The liquids can be cleaned of sulfur and ash prior to use as a fuel and have higher thermal efficiencies (60-70 percent range), high product yield, and potentially marketable byproducts, such as gasoline.

V.B Other Pollution Prevention Technologies

Cogeneration

Cogeneration is the production of electricity and heat from a single power plant unit. Because of the heat recovery aspect, cogeneration itself is a pollution prevention strategy. In cogeneration, heat that would otherwise be released from a steam turbine, gas turbine, or diesel engine is recaptured and used to heat buildings or other industrial processes or to generate additional electricity. In fact, whereas the typical efficiency at a fossil fuel electric plant is around 33 to 38 percent, cogenerators can obtain up to 80-percent efficiency because of the heat recaptured. The heat recovered comes mainly from the flue gases.[37]

Cogeneration plants were originally industrial applications. They are still used primarily to provide power for industries, hotels, universities, etc., yet they are increasingly being designed for larger capacities and are competing with utilities for power production. Cogeneration plants may be owned by an industrial company, supplying its own power, or they may be owned by

small entrepreneurial companies. Besides size requirements, factors such as type of fuel to burn, methods of recapturing heat, and control of emissions, should be considered when evaluating cogeneration as a power source.

DOE's Office of Industrial Technology (OIT) has several projects underway to promote cogeneration, which is a commercially available technology. For example, OIT teamed up with Riegel Textile Corporation to design and test an innovative 4.3 MW high-back-pressure steam cogeneration system using a modified coal-fired boiler. The turbine exhaust (225 psig at 570 degrees Fahrenheit) is hot enough to be used for process heating and can also be used to drive an existing low-pressure turbine to generate additional electricity. In 1994, 17 such systems were in operation.[38]

Repowering

Repowering is a way in which power generation facilities can improve and increase both the production and efficiency of standard thermal generating facilities. Repowering options include expanding a unit's size or changing the type or quality of the fuel used. In most cases, it involves partial or complete replacement of the steam supply system and usually a more or less complete retention, refurbishment, and reuse of the turbine/generator. Many of the technologies listed above are appropriate for repowering.

Fuel Cells

Natural gas fuel cell (NGFC) energy systems improve gas utilization and efficiency. Like batteries, fuel cells are based on the principles of electrochemistry, except that they consume fuel to maintain the chemical reaction. The most common electrochemical reaction in a fuel cell is that of hydrogen with oxygen. The oxygen is usually derived from the air, and the hydrogen is usually obtained by steam-reforming fossil fuel. Natural gas is the most common fuel; however, other fuels can be used: peaked-shaved gas, air-stabilized gas from local production such as landfills, propane, or other fuels with high methane content. Fuel Cells, being electrochemical, are more efficient than combustion systems. In addition, emissions are reduced from typical gas systems because there is no combustion of fossil fuel. Although many fuel cells are being researched, developed, and demonstrated around the world, only one system is commercially available at this time. It is a 200 kW phosphoric acid fuel cell system.[39]

Because emissions are reduced, State and local air quality regulating agencies have begun to grant and/or consider exemptions from air quality permitting requirements. For example, after extensive emissions testing, the South Coast Air Quality Management District has granted NGFC's exemption in

the Los Angeles area. Exemptions have also been granted by the Santa Barbara Air Quality Management District, the Bay Area Air Quality Management District, and the State of Massachusetts. These exemptions may create economic incentives to install NGFC systems to avoid permitting fees and violation fines, or to take advantage of emissions credits. A Federal incentive program is being managed by the DOE Morgantown Energy Technology Center to reduce the cost of the fuel cell by $1,000 per kW.[40]

Additional information on this technology may be obtained from the North American Fuel Cell Owner Group (NAFCOG), an independent users group comprised of owners and operators of NGFCs.

V.C Other Pollution Prevention and Waste Minimization Opportunities

In addition to the technologies discussed previously, several other pollution prevention methods can be employed. Some of the methods are common solutions applicable to a wide range of facilities; others are more tailored to site-specific situations. Some of the methods are relatively simple, whereas others require more technological modifications. This section includes not only physical tasks, but management and training steps that foster pollution prevention.

V.C.1 Process or Equipment Modification Options

Fuel Sources

As discussed under the CCT Program, the initial fuel source may be examined as a potential pollution prevention opportunity. Clean coal technologies remove the pollutants prior to the major processes of electrical generation. But on a case-by-case basis, one can also consider the option of using fuels that are naturally lower in pollutants. Low-sulfur coals produce less SO_2 emissions, and there is less pollution associated with coal pile runoff. However, a tradeoff exists in that most low-sulfur coal in the United States is "low rank" (i.e., it has a higher ash and moisture content). Several operational difficulties stem from switching from high-rank to low-rank coal. Nonetheless, processing techniques to improve the BTU and remove sulfur from low-rank coals are being developed. For example, SynCoal (Western Energy Company) is a technology that produces a fuel with a 0.5 percent sulfur content, a moisture content of greater than 5 percent, a heating value of 11,800 Btu per pound, and ash content of approximately 9 percent.

Another related technology that has been researched extensively is co-firing using refuse derived fuel (RDF) pellets and coal in power plants. In 1992, DOE's OIT, in cooperation with several organizations, operated a power

plant with a mixture of coal and up to 25 percent RDF pellets. The project found that the mixture resulted in reduced acid gas emissions. The CAA amendments of 1990 allow the combustion of up to 30 percent municipal solid waste in coal plants. The results of this project are facilitating commercialization of the co-combustion technology.

Cooling Water

Cooling water is used in steam turbine electric power plants and is circulated through the condenser to condense the steam left after the generation of electricity. The resulting condensate can then be pumped back into the high-pressure boiler. Cooling systems may be once-through, where cooling water is discharged into a receiving water body after use, or recirculating, which involves the use of cooling towers, lakes, or ponds. Scaling of heat exchange equipment and piping occurs from cooling water contact and reduces the efficiency of the equipment. To prevent scaling, chemical additives, such as polyphosphates, polyester, phosphates, and polyacrylates, are added to cooling water. In the past, cooling tower treatment chemicals contained hexavalent chromium. Recent regulations have restricted the use of chrome-based treatment to reduce the associated public health and environmental impacts. As a result, industry has switched to non-chrome treatment chemicals.

Corrosion, fostered through aeration of cooling water in cooling towers, is another problem. A number of different chemicals such as zinc, molybdate, silicate, polyphosphate, aromatic azole, carboxylate, and sometimes chromate are added to cooling water for corrosion control. Fouling and biological growth are commonly controlled through the addition of polyester, phosphates, polyacrylates, non-oxidizing biocides, chlorine, and bromine.

Pollution prevention opportunities for cooling water address minimizing chemical additives and conserving water. Table 28 presents a few general pollution prevention recommendations for reducing cooling tower emissions.

First and foremost, a facility can determine the optimum chemicals for the prevention of biologic growth and corrosion. In general, chlorinated biocides are less toxic than brominated biocides, and polyphosphate and organo-phosphate inhibitors are less toxic than chromate corrosion inhibitors. Another possible means to reduce the need for chemical additives for control of scaling is magnetic water conditioning.

Widespread attention has focused on ozone treatment in lieu of common biocide use. Ozone acts to rupture bacterial cells through oxidation. Reductions in scaling, biofouling, and overall toxics may be realized from

ozone. It has been successful mainly in once-through cooling water systems for power plants. Drawbacks in the use of ozone treatment include (1) the potential for corrosion in cooling towers, unless careful dosing is practiced to maintain the oxidation-reduction potential rate and (2) ozone treatments have been shown to exhibit rapid fouling on high temperature surfaces such as would be found in recirculating systems. In addition, health and safety issues associated with worker exposure to ozone must be considered.

Table 28: Pollution Prevention Opportunities for Reducing Cooling Tower Emissions
Pretreat makeup water: Pretreating the makeup water to cooling towers reduces the chemical treatment requirements for scale and corrosion control and can increase the number of times cooling water may be recycled before blowdown. **Use inert construction materials:** Polyethylene, titanium, and stainless steel are relatively nonreactive compared to carbon steel and require lesser quantities of scale and corrosion inhibitors. **Install automatic bleed/feed controllers and bypass feeders:** By installing this equipment on the cooling towers, facilities have reduced volumes of cooling tower chemicals, as well as energy costs, labor, and water. **Recirculate the cooling water:** When possible, cooling tower water should be recirculated instead of cycling once-through the system. **Use chlorinated biocides:** Facilities can use chlorinated biocides instead of brominated biocides to reduce the toxicity of biocides.
Sources: *Fact Sheet: Eliminating Hexavalent Chromium from Cooling Towers.* City of Los Angeles Board of Public Works, Hazardous and Toxic Materials Office. Undated; *Fact Sheet: Water and Chemicals Reduction for Cooling Towers.* North Carolina Department of Environmental Health and Natural Resources, Pollution Prevention Program. May 1987; *Pollution Prevention/Environmental Impact Reduction Checklist for Coal-Fired Power Plants.* U.S. Environmental Protection Agency, Office of Federal Activities. Undated.

Fireside Washes

In the combustion of fossil fuels, products of incomplete combustion will rise with gas and collect on boiler tubes and heat transfer units. Fireside wastes consist primarily of bottom ash and damaged refractory brick, which may be contaminated with heavy metals from the ash. As the buildup increases, the heat exchange efficiency decreases. Periodically, the buildup is removed by applying a large volume of water to the boiler surfaces. The wash water contains trace metals (nickel, chromium, iron, vanadium, and zinc), calcium, sodium, chlorides, nitrates, sulfates, and organics contained in suspended soot. The resulting waste is a wet ash sludge. This sludge may be co-managed for disposal with large volume combustion waste (fly ash, bottom ash, FGD sludge) or managed separately with other low-volume wastes and treated through physical or chemical precipitation, as well as pond evaporation.

Soot blowers use steam, air, or water to clean fireside fouled heat transfer surfaces. The removed soot and ash deposits are either reintroduced into the combustion process, redeposited for easier removal, or captured by particulate control equipment. Sonic horns generate sound waves that cause the heat transfer surface to vibrate and dislodge soot and ash. Manual cleaning includes brushing, sweeping, and vacuuming.

Abrasive cleaning methods remove contaminants by blasting a compound at the substrate. Typical blasting compounds are sand, walnut shells, or carbon dioxide pellets. The abrasive cleaning technology field is changing rapidly. New materials that may remove soot and ash without damaging the boiler tubes and refractory include plastic beads, sodium bicarbonate, and, potentially, liquid CO_2.

Table 29 provides some examples of pollution prevention opportunities for fireside washes.

Table 29: Pollution Prevention Options for Fireside Washes

Options	Comments
Use cleaner fuels	Natural gas is the cleanest burning fossil fuel, but availability limits widespread use. Cleaner burning fuel oils and coals are available but may be cost-prohibitive.
Use alternative cleaning methods	Soot blowers and sonic horns may be used to reduce the need for washing. Dry ash has higher potential for reuse. Abrasives may be used but add to waste created.
Recycle or reuse fireside wastes	Lime sludge from treatment may be sold to copper smelters. Vanadium recovery from fuel oil ash may be feasible. Coal ash can be used as a substitute for cement in concrete or as structural fill.

Source: *Industrial Pollution Prevention Handbook.* Freeman, Harry M., ed. McGraw Hill, Inc. 1995.

Boiler Chemical Cleaning Wastes

The purpose of boiler cleaning is to remove scale from the inside (water side) of boiler tubes. The waste generated contains spent cleaning solution and the scaling components: copper, iron, zinc, nickel, magnesium, and chromium. Certain cleaning agents target certain types of boilers and deposits. Boiler cleaning wastewaters may be difficult to treat and, in some cases, fall under the jurisdiction of the Resource Conservation and Recovery Act (RCRA) as a hazardous waste.

One way to minimize the volume of boiler cleaning wastes is to optimize the cleaning frequency. Specific practices that help to optimize cleaning frequency include:

- Maintaining records of operations
- Conducting biweekly chemical analysis to define normal cycle chemistry
- Sampling tubes annually
- Determining the location and/or type of deposits through ultrasonic imaging, thermocouples, removable test strips, and fiberscopic inspections.

Controlling the chemistry of the boiler feed water is a significant way to control the rate of scaling. Generally, boiler water is treated through fine filtration, chemical treatment, reverse osmosis, and/or ion exchange to remove minerals. Other constituents in the boiler water targeted for removal may include oxygen and carbon dioxide.

While most utilities use hydrazine and morpholine in the chemical treatment of boiler feed water, an elevated oxygen treatment process has been demonstrated that results in the accumulation of a finer-grained, more unified, magnetite layer that necessitates less frequent cleaning. To create this condition, oxygen or hydrogen peroxide is added to condensate at a pH of 7 to 7.5, oxygen and ammonia are added at a pH of 8 to 8.5, and ammonia is added at a pH of 9 or greater, until ammonia concentrations of 250 parts per billion are reached.

The boiler cleaning frequency may be decreased by reducing the amount of oxygen entering the boiler due to leaks in the system. Leaks can be corrected through inspection and replacement of seals on steam cycle components. Maintenance schedules and monitoring techniques are effective practices in preventing leaks. Furthermore, maintaining high quality performance of the oxygen deaerators will also help to prevent oxygen ingress.

Another effective pollution prevention technique is determining the optimum frequency of boiler cleanouts. Utilities should clean the boilers based on the actual deposit thickness instead of according to a predetermined schedule. According to a survey performed by EPRI, one California utility monitors both scale thickness and composition by means of small, retrievable test strips placed inside the boiler. Base unit boilers are now cleaned about once every 72 months, and cycling units are cleaned once every 48 months. Other California utilities report cleaning schedules as often as once every 24 months.[41]

On-line cleaning involves boiler cleaning while the boiler remains in operation. This can be done by injection of a sodium poly-acrylate additive into the boiler feedwater to a concentration of 400 mg/L. The most critical outer layer of magnetite is removed, but an inner layer remains. This method requires less cleaning time than traditional boiler cleaning, uses less

hazardous chemicals, and results in a more easily handled waste. The drawbacks of on-line cleaning include the risk of contaminating the steam turbine, less deposits removed, and potentially poor copper removal. Cost savings associated with the use of this technology at a 300-MW unit have been estimated to be $25,000 to $30,000 per year.[42]

Sodium bicarbonate-based blast media can be used in association with specifically designed delivery systems to meet a wide range of cleaning needs, including general facility maintenance (e.g., floor cleaning, paint stripping and boiler tube cleaning). Sodium bicarbonate blasting is becoming increasingly common in the electric utility industry.[43]

In areas where water costs are high, utilities may choose to reuse their boiler chemical cleaning wastewater as makeup for cooling towers, fly ash scrubbers, or flue gas desulfurization systems.[44] Also, depending on the composition of the chemical cleaning sludge, it may be economically feasible to recycle the sludge for its metal content. Arizona Electric Power Cooperative (AEPCO), Incorporated, for example, uses this cleaning material, rather than face potentially expensive disposal costs. The EPA, the Arizona Department of Environmental Quality, the California Department of Toxic Substances Control, and the Occupational Safety and Health Administration approved the use of by products from chemical cleaning from AEPCO's boilers. AEPCO sells the by-product to Pacific Gas & Electric Company for hydrogen sulfide gas abatement at its Geysers Power Plant, a geothermal power generation facility.[45]

Table 30 lists pollution prevention opportunities for boiler cleaning wastes.

Fly Ash

Fly ash is typically collected in the flue of the combustion unit and transported to a centralized containment area for treatment and storage. Both wet ash transport and dry collection are commonly practiced. Some facilities use wet ash, creating a slurry as the mechanism for transport. The disadvantage of wet ash transport is that it increases the volume of the ash waste and it must eventually be separated out and treated. In contrast, a dry process control electrostatic precipitator avoids the added volume due to water and allows the collection of a dry product for recycling and/or beneficial reuse.

Chemical Substitutions

Several process modifications described previously have required material substitution (e.g., switching fuels). However, material substitutions are not

Table 30: Pollution Prevention Options for Boiler Cleaning Wastes

Options	Comments
Improve boiler water supply	Regenerate ion exchange resins promptly. Install reverse osmosis equipment ahead of ion exchange systems to reduce mineral loading and reduce regeneration frequency.
Control boiler water chemistry	Use hydrazine to control dissolved oxygen and morpholine to control carbon dioxide.
Reduce contaminant ingress	Improve equipment seals to prevent air and cooling water leaks into the boiler.
Base cleaning on fouling	Use coupons to measure scale buildup and schedule cleaning accordingly.
Use on-line cleaning	Sodium polyacrylate injection may be used to remove deposits without having to shut down boiler. Further research required.
Reuse wastewater	Wastewater may be used for cooling tower makeup or as feedwater to ash scrubbers and flue gas desulfurization units. Some pretreatment and/or segregation may be required.
Reuse lime sludge	Sludges from lime treatment of chemical cleaning wastes may be sold to copper smelters for reuse.
Control H_2S	Ethylenediamine-tetraacetic acid (EDTA)-based cleaning processes can produce Fe-EDTA, which is an effective chelating agent for H_2S control.

Source: Adapted from *Industrial Pollution Prevention Handbook.* Freeman, Harry M., ed. McGraw Hill, Inc. 1995.

limited to major processes. Sometimes, toxic chemicals are used unnecessarily on a wide-scale basis for a variety of operations and maintenance activities (e.g., cleaning, lubrication). By substituting less toxic chemicals, a facility can avoid unnecessary risks associated with worker exposure and the potential for release into the environment. The first step in determining the viability of material substitutions is to inventory the chemicals used at the site. The chemical can be evaluated as to its hazard potential, its necessity, and possible alternatives. For example, San Diego Gas and Electric Company determined several different solvents onsite could be replaced by just a few different solvents. By eliminating the wide array of solvents, the company is now able to install a solvent recovery unit, which will reduce the amount of solvent waste.

V.C.2 Inventory Management and Preventative Maintenance for Waste Minimization

Fossil fuel electric power generation facilities, like many industrial facilities, use solvents and other chemicals for everyday operations. Everyday

operations include parts washing, lubricating, general cleaning, and degreasing application during plant and equipment maintenance activities. Often, chemical wastes generated by these operations are made up of out-of-date, necessary, off-specification, and spilled or damaged chemical products. Actual costs for materials used include not only the cost of the original product, but also the costs of disposal. Inventory management and preventative maintenance are ways these facilities can decrease the amounts of chemical wastes generated in a cost-effective manner.

There are two categories of inventory management including inventory control and material control. Inventory control includes techniques to reduce inventory size, reduce toxic and/or hazardous chemical use, and increase current inventory turnover. Material control includes the proper storage and safer transfer of materials. Proper material control will ensure that materials are used efficiently to reduce waste and preserve the ability to recycle the wastes.

Corrective and preventative maintenance can reduce waste generation. A well run preventative maintenance program will serve to identify the potential for releases and correct problems before material is lost and/or considered a waste. New or updated equipment can use process materials more efficiently, producing less waste. Table 31 provides examples of inventory management and preventative maintenance waste minimization techniques that can be used at fossil fuel electric power generation facilities.

V.C.3 Potential Waste Segregation and Separation Options

Fossil fuel electric power generation facilities can reduce their waste disposal costs by carefully segregating their waste streams. In particular, facilities should segregate RCRA nonhazardous wastes from hazardous wastes to reduce the quantity of waste that must be disposed of as a hazardous waste. For example, facilities should segregate used oil from degreasing solvents because uncontaminated used oil can be recycled or fed into the boiler as a supplemental fuel. Oil contaminated with polychlorinated biphenyls (PCBs) should be segregated from other used oils. Absorbent material that is not fully saturated with oils, etc., should be stored separately from saturated material so that it can be reused. Recycling companies typically offer a higher price for segregated recyclables (e.g., clean office paper, scrap metal) than mixed waste streams.

Table 31: Inventory Management and Preventative Maintenance Waste Minimization Opportunities
Inventory Management
Inventory Control
• Purchase only the quantity of material needed for the job or a set period of time • Evaluate set expiration date on materials, especially for stable compounds, to determine if they could be extended. • Search the inventory at other company sites for available stock before ordering additional material • Purchase material in the proper quantity and the proper container size. If large quantities are needed, purchase in bulk. If the material has a short shelf-life or small quantities are needed, purchase in small containers • If surplus inventories exist, use excess material before new material are ordered • Contact supplier to determine if surplus materials can be returned. If not, identify other potential users or markets • Evaluate whether alternative, non-hazardous substitutes prior to purchase and checked for acceptance at the facility.
Material Control
• Reduce material loss through improved process operation, increased maintenance and employee training to identify sources of loss • Handle and manage wastes to allow recycling.
Maintenance Programs
Operational and Maintenance Procedures
• Reduce raw material and product loss due to leaks, spills, and off-specification products • Develop employee training procedures on waste reduction • Evaluation the need for operational steps and eliminate practices that are unnecessary • Collect spilled or leaked material for re-use whenever possible • Consolidate like chemicals and segregate wastes to reduce the number of different waste streams and increase recoverability.
Preventive Maintenance Programs
• Perform maintenance cost tracking • Perform scheduled preventive maintenance and monitoring • Monitor closely "Problem" equipment or processes that are known to generate hazardous waste (e.g., past spills).
Source: Adapted from "ComEd Operation and Maintenance Manual" and "Pollution Prevention Success" Fact Sheets. Received From Edison Electric Institute. July 1997.

V.C.4 Recycling Options

With the exception of cooling water and used oil, fly ash represents the greatest waste component at fossil fuel plants. For this reason, recycling options for fly ash present a significant opportunity for pollution prevention. Typical uses include incorporating fly ash into construction materials, such as asphalt or cement. However, new uses are being found every day. Table 32 lists existing and potential marketable uses for fly ash. More information about the production and use of fly ash and other coal combustion materials can be obtained from the American Coal Ash Association.[46]

Table 32: Current and Potential Uses for Fly Ash
Current Uses for Fly Ash
Flowable fill Soil stabilization Lightweight aggregate building material Roofing materials Roofing granules Plastics, paint Filter cloth precoat for sludge dewatering Pipe bedding Structural fills Concrete and block Portland cement Mine reclamation Agricultural enhancement Road paving: as a sub-base or fill material under a paved road
Potential Uses for Fly Ash
Ingredient of golf ball coverings Flue gas reactants An additive to sewage sludge for use as a soil conditioner An alkali reactivity minimizer in concrete aggregate The footprint of a structure, a paved parking lot, sidewalk, walkway, or similar structure

The Carolina Power and Light (CP&L) is successful in selling 80 to 100 percent of the fly ash generated at three coal-fired power plants. The CP&L estimates capital costs to be $1 to $2/ton of fly ash and operation and maintenance costs to be $3 to $4/ton of fly ash. The ash sales revenues have resulted in reduced disposal costs. Duke Power has experienced similar success. Duke Power has sold more than 230,000 tons of fly ash and 65,400 tons of bottom ash for use in concrete production. Other markets for the fly ash included plastic manufacturing and asphalt production. In addition, Duke Power donated 30,000 tons of bottom ash to the State of North Carolina to use as a base in road construction.

It should be noted that uses for fly ash vary greatly according to market conditions and transportation costs. In addition, for most uses, the ash must have a low carbon content. However, available commercial technologies can separate the ash into carbon-rich and carbon-poor fractions.

Pollution prevention associated with boiler blowdown was discussed previously; however, boiler blowdown water may potentially be recycled and used as makeup to cooling tower waters and flashing blowdown to generate additional steam. This is accomplished through the regeneration of demineralizer waters.

Sulfur is produced through the cleaning of fuels and ores and the use of clean scrubbers. Recycling options include the following:

- Substituting sulfur for Portland cement and water to act as a binding agent to produce a durable, acid-resistant concrete
- Using sulfur in protective coatings to improve the resistance of conventional building materials to chemical and other stresses; fabric can be impregnated with sulfur and additive materials to produce flexible or rigid lining materials
- Using sulfur as an asphalt extender or as an asphalt replacement to totally eliminate the need for asphalt.

The FGD units can produce sulfur, sulfuric acid, gypsum, or some non-saleable sludge material. Select FGD units can produce saleable materials, as indicated in the following examples:

- Gypsum can be processed into a quality gypsum grade for resale to wall board producers or sold for use in cement manufacturing.
- Sodium sulfate and sulfuric acid can be produced for resale.
- An electron beam scrubbing system can be used to produce ammonium sulfate and ammonium nitrate for sale as a fertilizer supplement.
- A pozzolanic stabilization reaction process can be implemented where lime-based reagent is added to scrubber sludge and fly ash to create a mineral product suitable for roadway base course. (Pozzolans are siliceous or siliceous/aluminous materials that, when mixed with lime and water, form cementitious compounds.)

V.C.5 Facility Maintenance Wastes

In addition to the wastes associated with the power production operations, fossil fuel electric power generation facilities also generate wastes from support operations, such as facility and equipment maintenance, storage areas, transportation, and offices. Pollution prevention techniques can greatly reduce many of these waste streams for relatively little cost.

Table 33 highlights several basic pollution prevention options for equipment and facility maintenance. All of the options involve the use of commercially available equipment that is already in widespread use. In addition to the options described in Table 33, common pollution prevention options include:

- Establishing preventive maintenance programs for equipment
- Testing fluids prior to changing them
- Purchasing equipment to enable recycling of antifreeze, solvents, and oil/water mixtures

- Purchasing longer lasting/reusable absorbent materials and rags
- Laundering rags offsite instead of disposing of them
- Using steam cleaning equipment or sodium bicarbonate blast systems for general facility cleaning
- Purchasing electric-powered vehicles for onsite use
- Upgrading bulk storage equipment and spill prevention practices
- Improving spill containment equipment and equipment for transferring fluids
- Using low- or no-VOC paints for facility maintenance and restricting color choices
- Recycling office paper, cardboard, plastics, scrap metals, wood products, etc.
- Purchasing products with recycled content
- Finding alternatives to replace ozone depleting substances (e.g., refrigerants, fire suppression, degreasers)
- Practicing integrated pest management to reduce the use of pesticides in grounds maintenance operations
- Using less toxic products for custodial operations.

Table 33: Pollution Prevention Opportunities For Facility Maintenance Wastes	
Options	**Comments**
Rotating Equipment Maintenance	
Use high quality fluids	While costing more initially, high quality fluids may last twice as long in service.
Routinely monitor fluid condition	Waste fluid generation can be reduced by switching to a replacement schedule based on fluid condition. Low-cost testing services can provide detailed information.
Use nonleak equipment	Use dry disconnect hose couplings, self sealing lock nuts, and elastomeric flange gaskets to reduce oil leakage. Canned or magnetically driven pumps, bellow valves, and bellow flanges are also effective.
Clean and recycle dirty fluids	Dirty fluids may be cleaned for extended use by small filtration devices. More complex systems may use centrifugation or vacuum distillation.
Use waste oils as boiler fuel	This depends on boiler size, PCB content, and halogen content of the waste oil. Would not apply to synthetic hydraulic fluids.
Facility Maintenance	
Eliminate use of hazardous materials	Major accomplishments have been made in this area, including eliminating the use of PCBs, asbestos insulation, chromium-based cooling water treatment chemicals, and leaded paints.
Replace tricarboxylic acid (TCA) and chlorofluorocarbons (CFCs) with non-ODS cleaners	Petroleum distillate and D-limonene blends are effective cleaners for electrical equipment. Detergents are good for general purpose cleaning but must be kept out of yard drains and oil water separators.
Use high transfer efficiency painting equipment	Brushes, rollers, and hand mitts are very efficient but labor-intensive. Airless spray is common for field use since a source of clean, dry air is not required.
Use an enclosed cleaning station	Several air districts mandate the use of enclosed gun cleaners and prohibit the spraying of cleanup solvent into the air.
Avoid the removal of leaded paint	Removal of lead-based paint should only be performed when the paint fails to provide adequate protection. Use wet blasting or vacuum collective devices to prevent the generation of leaded paint dust.

Source: *Industrial Pollution Prevention Handbook.* Freeman, Harry M., ed. McGraw-Hill, Inc. 1995.

V.C.6 Storm Water Management Practices

An important pollution prevention consideration at fossil fuel electric power generation plants is the management of runoff. Coal pile runoff is perhaps the most significant. Coal pile runoff results from precipitation coming into contact with coal storage piles. The most effective way to eliminate coal pile runoff is to store coal indoors. In many instances, this is not feasible, at which point, pollution prevention turns to managing runoff. A facility's storm water pollution prevention plan should address storm water controls (e.g., dikes, levies) and the potential for reuse of storm water. Coal-handling areas also represent potential for coal pollutants to contaminate storm water. Table 34 lists practices that can prevent pollutants in coal from contaminating storm water.

Table 34: Common Pollution Prevention Practices for Managing Runoff at Coal Storage and Handling Areas [47]

- Consider rail transport of coal over barge transport, because the potential impacts to water are lessened.
- Cover coal off-loading areas, crushers, screens, and conveyors to reduce dust emissions.
- Cover coal storage piles or store in silos to prevent contact with precipitation and to minimize dust.
- Spray coal piles with anionic detergents. This will reduce the acidic content of the pile by reducing bacterial oxidation of sulfide minerals.
- Configure a storm water collection system based on slopes, collection ditches, diversions and storage, and treatment ponds.
- If settling ponds exist, consider recycling the dredgings.

Some of the practices listed in the table are applicable to fly ash storage and handling areas, as well as coal pile runoff. For example, if dry ash transport is employed, covers will prevent dust and contact with precipitation. Other areas of concern with respect to storm water pollution prevention include fuel and chemical handling and storage areas where there is potential for spills. Table 35 provides some recommended practices that apply to these areas. Ideally, these practices should be addressed in a facility's storm water pollution prevention plan.

Table 35: Storm Water Pollution Prevention Opportunities at Fossil Fuel Electric Power Generation Facilities

Areas of Concern	Storm Water Pollution Prevention Opportunities
Fuel Oil Unloading Areas	• Use containment curbs to contain spills • Station personnel familiar with spill prevention and response procedures at areas during deliveries to ensure quick response for leaks or spills • Use spill and overflow protection technologies
Chemical Unloading/Loading Areas	• Use containment curbs to contain spills • Cover area • Station personnel familiar with spill prevention and response procedures at areas during deliveries to ensure quick response for leaks or spills
Miscellaneous Loading/Unloading Areas	• Use grading, berming, and curbing to minimize runon • Locate equipment and vehicles so leaks can be controlled in existing containment and flow diversion system • Cover area
Liquid Storage Tanks	• Use dry cleanup methods • Use containment curbs to contain spills • Use spill and overflow protection technologies
Large Bulk Fuel Storage Tanks	• Use containment curbs to contain spills
Oil-Bearing Equipment Storage Areas	• Use level grades and gravel surfaces to retard flow and limit spread of spills • Collect storm water in perimeter ditches
Ash-Loading Areas	• Establish procedures to reduce or control tracking of ash or residue from ash loading areas • Clear ash from building floor and immediately adjacent roadways of spillage, debris, and excess water before each loaded vehicle departs
Areas Adjacent to Disposal Ponds	• Reduce ash residue, which can be tracked onto access roads traveled by residue trucks or residue handling vehicles • Reduce ash residue on exit roads leading into and out of residue-handling areas
Material Storage Areas	• Use level grades • Collect runoff in graded swales or ditches • Implement erosion protection measures at steep outfall sites • Provide cover for material

Source: Preamble to NPDES Storm Water Multi-Sector General Permit for Industrial Activities (60 *FR* 50974 Friday, September 29, 1995).

V.C.7 Training and Supervision Options

While the major pollution prevention gains are achieved through process controls and reuse/recycling, many day-to-day common sense practices are relatively easy and inexpensive to incorporate. Through training, these practices can become effective means of pollution prevention. Examples of proactive employee behavior includes training for careful use and disposal of cleaners and detergents to prevent them from entering floor and yard drains. If these substances do enter the drains, they may interfere with oil/water separators. Good housekeeping will ensure optimum performance of these treatment units.

V.C.8 Demand-Side Management Programs

In the past, electric utilities have implemented demand-side management (DSM) programs to achieve two basic objectives: energy efficiency and load management. Through these demand-side programs, the utilities have successfully reduced toxic air emissions and achieved cost effectiveness for both the utility and the consumer, mainly by deferring the need to build new power plants.[48] The energy efficiency goal has been achieved primarily by reducing the overall consumption of electricity from specific end-use devices and systems by promoting high-efficiency equipment and building design.

With the advent of deregulation and restructuring in the utility power generation industry, DSM programs appear to be diminishing. The industry is reducing DSM spending and experiencing a reduction in the rate of growth on energy savings. Among other factors, the potential for restructuring could affect the utilities interest in energy savings or may create new types of DSM activities.

VI. SUMMARY OF FEDERAL STATUTES AND REGULATIONS

This section discusses the Federal regulations that may apply to this sector. The purpose of this section is to highlight and briefly describe, the applicable Federal requirements, as well as to provide citations for more detailed information. This sections includes:

- Section VI.A, a general overview of major statutes
- Section VI.B, a list of regulations specific to this industry
- Section VI.C, a list of pending and proposed regulations.

The descriptions within Section VI are intended solely for general information. Depending upon the nature or scope of the activities at a particular facility, these summaries may or may not necessarily describe all applicable environmental requirements. Moreover, they do not constitute formal interpretations or clarifications of the statutes and regulations. For further information, readers should consult the Code of Federal Regulations and other state or local regulatory agencies. This section also provides EPA hotline contacts for each major statute.

VI.A General Description of Major Statutes

Resource Conservation and Recovery Act

The Resource Conservation And Recovery Act of 1976, which amended the Solid Waste Disposal Act, addresses solid (Subtitle D) and hazardous (Subtitle C) waste management activities. The Hazardous and Solid Waste Amendments (HSWA) of 1984 strengthened RCRA's waste management provisions and added Subtitle I, which governs underground storage tanks (USTs).

Regulations promulgated pursuant to Subtitle C of RCRA (40 CFR Parts 260-299) establish a "cradle-to-grave" system governing hazardous waste from the point of generation to disposal. RCRA hazardous wastes include the specific materials listed in the regulations (listed wastes). Listed wastes are designated with a specific code. Hazardous wastes designated with the code "P" or "U" are commercial chemical products including technical grades, pure forms, off-specification products, sole-active-ingredient products, or spill or container residues of these products. "P" wastes are considered acutely hazardous and are subject to more stringent requirements. Hazardous wastes from specific industries/sources are designated with the code "K" and hazardous wastes from non-specific sources are designated with the code "F." Materials that exhibit a hazardous waste characteristic (i.e., ignitability, corrosivity, reactivity, or toxicity) are designated with the code "D."

Regulated entities that generate hazardous waste are subject to waste accumulation, manifesting, and record keeping standards. Facilities generally must obtain a permit either from EPA or from a State agency that EPA has authorized to implement the permitting program if they store hazardous wastes for more than 90 days before treatment or disposal. Facilities may treat hazardous wastes stored in less-than-ninety-day tanks or containers without a permit. Subtitle C permits contain general facility standards, such as contingency plans, emergency procedures, record keeping and reporting requirements, financial assurance mechanisms, and unit-specific standards. RCRA also contains provisions (40 CFR Part 264 Subpart S and §264.101) for conducting corrective actions that govern the cleanup of releases of hazardous waste or constituents from solid waste management units at RCRA treatment, storage, and disposal facilities.

Although RCRA is a Federal statute, many States implement the RCRA program. Currently, EPA has delegated authority to implement various provisions of RCRA to 47 of the 50 States and two U.S. territories. Delegation has not been given to Alaska, Hawaii, or Iowa.

Most RCRA requirements are not industry specific but apply to any company that generates, transports, treats, stores, or disposes of hazardous waste. The following list highlights important RCRA regulatory requirements:

- **Identification of solid and hazardous wastes** (40 CFR Part 261) lays out the procedure every generator must follow to determine whether the material in question is considered a hazardous waste or a solid waste or is exempted from regulation.

- **Standards for generators of hazardous waste** (40 CFR Part 262) establishes the responsibilities of hazardous waste generators including obtaining an EPA ID number, preparing a manifest, ensuring proper packaging and labeling, meeting standards for waste accumulation units, and fulfilling record keeping and reporting requirements. Providing they meet additional requirements described in 40 CFR Part 262.34, generators may accumulate hazardous waste for up to 90 days (or 180 or 270 days depending on the amount of waste generated and the distance the waste will be transported) without obtaining a Subtitle C permit.

- **Land disposal restrictions** (LDRs) (40 CFR Part 268) are regulations prohibiting the disposal of hazardous waste on land without prior treatment. Under the LDRs program, materials must meet LDR treatment standards prior to placement in a RCRA land disposal unit (landfill, land treatment unit, waste pile, or surface impoundment). Generators of waste subject to the LDRs must provide notification of such to the designated

treatment, storage, and disposal (TSD) facility to ensure proper treatment prior to disposal.

- **Used oil management standards** (40 CFR Part 279) impose management requirements affecting the storage, transportation, burning, processing, and re-refining of the used oil. For parties that merely generate used oil, regulations establish storage standards. For a party considered a used oil processor, re-refiner, burner, or marketer (i.e., one who generates and sells off-specification used oil directly to a used oil burner), additional tracking and paperwork requirements must be satisfied.

- RCRA contains unit-specific standards for all units used to store, treat, or dispose of hazardous waste, including tanks and containers. Tanks and containers used to store hazardous waste with a high volatile organic concentration must meet emission standards under RCRA. Regulations (40 CFR Part 264-265, Subpart CC) require generators to test the waste to determine the concentration of the waste, to satisfy tank and container emissions standards, and to inspect and monitor regulated units. These regulations apply to all facilities that store such waste, including large quantity generators accumulating waste prior to shipment off-site.

- **Underground storage tanks** containing petroleum and hazardous substances are regulated under Subtitle I of RCRA. Subtitle I regulations (40 CFR Part 280) contain tank design and release detection requirements, as well as financial responsibility and corrective action standards for USTs. The UST program also includes upgrade requirements for existing tanks that must be met by December 22, 1998.

- **Boilers and industrial furnaces** (BIFs) that use or burn fuel containing hazardous waste must comply with design and operating standards. The BIF regulations (40 CFR Part 266, Subpart H) address unit design, provide performance standards, require emissions monitoring, and restrict the type of waste that may be burned.

The EPA RCRA, Superfund and EPCRA Hotline, at (800) 424-9346, responds to questions and distributes guidance regarding all RCRA regulations. The RCRA Hotline operates weekdays from 9:00 a.m. to 6:00 p.m. ET, excluding Federal holidays.

Comprehensive Environmental Response, Compensation, and Liability Act

The Comprehensive Environmental Response, Compensation, and Liability Act (CERCLA), a 1980 law known commonly as Superfund, authorizes EPA to respond to releases, or threatened releases, of hazardous substances that

may endanger public health, welfare, or the environment. In addition, CERCLA enables EPA to force parties responsible for environmental contamination to clean it up or to reimburse the Superfund for response costs (including remediation costs) incurred by EPA. The Superfund Amendments and Reauthorization Act (SARA) of 1986 revised various sections of CERCLA, extended the taxing authority for the Superfund, and created a free-standing law, SARA Title III, also known as the Emergency Planning and Community Right-to-Know Act.

The CERCLA hazardous substance release reporting regulations (40 CFR Part 302) direct the person in charge of a facility to report to the National Response Center (NRC) any environmental release of a hazardous substance that equals or exceeds a reportable quantity. Reportable quantities are listed in 40 CFR §302.4. A release report may trigger a response by EPA or by one or more Federal or State emergency response authorities.

The EPA implements hazardous substance responses according to procedures outlined in the National Oil and Hazardous Substances Pollution Contingency Plan (NCP) (40 CFR Part 300). The NCP includes provisions for permanent cleanups, known as remedial actions, and other cleanups referred to as removals. The EPA generally takes remedial actions only at sites on the National Priorities List (NPL), which currently includes approximately 1,300 sites. Both EPA and states can act at sites; however, EPA provides responsible parties the opportunity to conduct removal and remedial actions and encourages community involvement throughout the Superfund response process.

The EPA RCRA, Superfund and EPCRA Hotline, at (800) 424-9346, answers questions and references guidance pertaining to the Superfund Program. The CERCLA Hotline operates weekdays from 9:00 a.m. to 6:00 p.m. ET, excluding Federal holidays.

Emergency Planning And Community Right-To-Know Act

The Superfund Amendments and Reauthorization Act of 1986 created EPCRA, a statute designed to improve community access to information about chemical hazards and to facilitate the development of chemical emergency response plans by State and local governments. The EPCRA required the establishment of State emergency response commissions (SERCs), which are responsible for coordinating certain emergency response activities and for appointing local emergency planning committees (LEPCs).

The EPCRA and the EPCRA regulations (40 CFR Parts 350-372) establish four types of reporting obligations for facilities that store or manage specified chemicals:

- **EPCRA §302** requires facilities to notify the SERC and LEPC of the presence of any extremely hazardous substance (the list of such substances is in 40 CFR Part 355, Appendices A and B) if it has such substance in excess of the substance's threshold planning quantity and directs the facility to appoint an emergency response coordinator.

- **EPCRA §304** requires the facility to notify the SERC and LEPC in the event of a release equaling or exceeding the reportable quantity of a CERCLA hazardous substance or an EPCRA extremely hazardous substance.

- **EPCRA §311 and §312** require a facility at which a hazardous chemical, as defined by the Occupational Safety and Health Act, is present in an amount exceeding a specified threshold to submit to the SERC, LEPC, and local fire department material safety data sheets (MSDSs) or lists of MSDS's and hazardous chemical inventory forms (also known as Tier I and II forms). This information helps the local government respond in the event of a spill or release of the chemical.

- **EPCRA §313** applies to facilities covered in SIC major groups 10 (except 1011, 1081, and 1094), 12 (except 1241), or 20 through 39; SIC codes 4911, 1193, and 4939 (limited to facilities that combust coal and/or oil for the purposes of generating power for distribution in commerce); or 4935 (limited to facilities regulated under RCRA, Subtitle C), or 5169, or 5171, and 7389 (limited to facilities primarily engaged in solvent recovery services on a contract or fee basis). These facilities must also have 10 or more employees and manufacture, process, or use specified chemicals in amounts greater than threshold quantities. Facilities that meet these criteria must submit an annual toxic chemical release report. This report, commonly known as the Form R, covers releases and transfers of toxic chemicals to various facilities and environmental media and allows EPA to compile the national TRI database.

All information submitted pursuant to EPCRA regulations is publicly accessible, unless protected by a trade secret claim.

The EPA RCRA, Superfund and EPCRA Hotline, at (800) 424-9346, answers questions and distributes guidance regarding the EPCRA regulations. The EPCRA Hotline operates weekdays from 9:00 a.m. to 6:00 p.m. ET, excluding Federal holidays.

Clean Water Act

The primary objective of the Federal Water Pollution Control Act, commonly referred to as the Clean Water Act (CWA), is to restore and maintain the

chemical, physical, and biological integrity of the Nation's surface waters. Pollutants regulated under the CWA include "priority" pollutants, including various toxic pollutants; "conventional" pollutants, such as biochemical oxygen demand (BOD), total suspended solids (TSS), fecal coliform, oil and grease, and pH; and "nonconventional" pollutants, including any pollutant not identified as either conventional or priority.

The CWA regulates both direct and indirect discharges. The NPDES Program (CWA §502) controls direct discharges into waters of the U.S. Direct discharges or "point source" discharges are from sources such as pipes and sewers. NPDES permits, issued by either EPA or an authorized State (EPA has authorized 42 States to administer the NPDES Program), contain industry-specific, technology-based limits and may also include additional water quality-based limits, and establish pollutant monitoring requirements. A facility that intends to discharge into the Nation's waters must obtain a permit prior to initiating its discharge. A permit applicant must provide quantitative analytical data identifying the types of pollutants present in the facility's effluent. The permit will then set the conditions and effluent limitations on the facility discharges.

A NPDES permit may also include discharge limits based on Federal or State water quality criteria or standards that were designed to protect designated uses of surface waters, such as supporting aquatic life or recreation. These standards, unlike the technological standards, generally do not take into account technological feasibility or costs. Water quality criteria and standards vary from State to State and site to site, depending on the use classification of the receiving body of water. Most States follow EPA guidelines, which propose aquatic life and human health criteria for many of the 126 priority pollutants.

Storm Water Discharges

In 1987, the CWA was amended to require EPA to establish a program to address storm water discharges. In response, EPA promulgated the NPDES storm water permit application regulations. These regulations require facilities with the following storm water discharges to apply for a NPDES permit: (1) a discharge associated with industrial activity, (2) a discharge from a large or medium municipal storm sewer system, or (3) a discharge that EPA or the State determines to contribute to a violation of a water quality standard or is a significant contributor of pollutants to waters of the United States.

The term "storm water discharge associated with industrial activity" is a storm water discharge from 1 of 11 categories of industrial activity defined at 40 CFR 122.26. Six of the categories are defined by SIC codes, while the

other five are identified through narrative descriptions of the regulated industrial activity. If the primary SIC code of the facility is one of those identified in the regulations, the facility is subject to the storm water permit application requirements. If any activity at a facility is covered by one of the five narrative categories, storm water discharges from those areas where the activities occur are subject to storm water discharge permit application requirements.

Those facilities/activities that are subject to storm water discharge permit application requirements are identified in the following list:

- **Category I**: Facilities subject to storm water effluent guidelines, new source performance standards, or toxic pollutant effluent standards.

- **Category ii**: Facilities classified as SIC 24-lumber and wood products (except wood kitchen cabinets); SIC code 26-paper and allied products (except paperboard containers and products); SIC code 28-chemicals and allied products (except drugs and paints); SIC code 291-petroleum refining; and SIC code 311-leather tanning and finishing; SIC code 32 (except 323)-stone, clay, glass, and concrete, 33-primary metals, 3441-fabricated structural metal, and 373-ship and boat building and repairing.

- **Category iii**: Facilities classified as SIC code 10-metal mining; SIC code 12-coal mining; SIC code 13-oil and gas extraction; and SIC code 14-nonmetallic mineral mining.

- **Category iv**: Hazardous waste treatment, storage, or disposal facilities.

- **Category v**: Landfills, land application sites, and open dumps that receive or have received industrial wastes.

- **Category vi**: Facilities classified as SIC code 5015-used motor vehicle parts; and SIC code 5093-automotive scrap and waste material recycling facilities.

- **Category vii**: Steam electric power generating facilities.

- **Category viii**: Facilities classified as SIC code 40-railroad transportation; SIC code 41-local passenger transportation; SIC code 42-trucking and warehousing (except public warehousing and storage); SIC code 43-U.S. Postal Service; SIC code 44-water transportation; SIC code 45-transportation by air; and SIC code 5171-petroleum bulk storage stations and terminals.

- **Category ix**: Sewage treatment works.

- **Category x:** Construction activities except operations that result in the disturbance of less than five acres of total land area.

- **Category xi:** Facilities classified as SIC code 20-food and kindred products; SIC code 21-tobacco products; SIC code 22-textile mill products; SIC code 23-apparel related products; SIC code 2434-wood kitchen cabinets manufacturing; SIC code 25-furniture and fixtures; SIC code 265-paperboard containers and boxes; SIC code 267-converted paper and paperboard products; SIC code 27-printing, publishing, and allied industries; SIC code 283-drugs; SIC code 285-paints, varnishes, lacquer, enamels, and allied products; SIC code 30-rubber and plastics; SIC code 31-leather and leather products (except leather and tanning and finishing); SIC code 323-glass products; SIC code 34-fabricated metal products (except fabricated structural metal); SIC code 35-industrial and commercial machinery and computer equipment; SIC code 36-electronic and other electrical equipment and components; SIC code 37-transportation equipment (except ship and boat building and repairing); SIC code 38-measuring, analyzing, and controlling instruments; SIC code 39-miscellaneous manufacturing industries; and SIC code 4221-4225-public warehousing and storage.

To determine whether a particular facility falls within one of these categories, consult the regulation.

Pretreatment Program

Another type of discharge that is regulated by the CWA is one that goes to a publicly-owned treatment works (POTWs). The national pretreatment program (CWA §307(b)) controls the indirect discharge of pollutants to POTWs by "industrial users." Facilities regulated under §307(b) must meet certain pretreatment standards. The goal of the pretreatment program is to protect municipal wastewater treatment plants from damage that may occur when hazardous, toxic, or other wastes are discharged into a sewer system and to protect the quality of sludge generated by these plants. Discharges to a POTW are regulated primarily by the POTW itself, rather than the State or EPA.

The EPA has developed technology-based standards for industrial users of POTWs. Different standards apply to existing and new sources within each category. "Categorical" pretreatment standards applicable to an industry on a nationwide basis are developed by EPA. In addition, another kind of pretreatment standard, "local limits," are developed by the POTW in order to assist the POTW in achieving the effluent limitations in its NPDES permit.

Regardless of whether a State is authorized to implement either the NPDES or the pretreatment program, if it develops its own program, it may enforce requirements more stringent than Federal standards.

Spill Prevention, Control and Countermeasure Plans

The 1990 Oil Pollution Act requires that facilities that could reasonably be expected to discharge oil in harmful quantities prepare and implement more rigorous Spill Prevention Control and Countermeasure (SPCC) Plan required under the CWA (40 CFR §112.7). There are also criminal and civil penalties for deliberate or negligent spills of oil. Regulations covering response to oil discharges and contingency plans (40 CFR Part 300), and Facility Response Plans to oil discharges (40 CFR §112.20) and for PCB transformers and PCB-containing items were revised and finalized in 1995.

EPA's Office of Water, at (202) 260-5700, will direct callers that questions about the CWA to the appropriate EPA office. EPA also maintains a bibliographic database of Office of Water publications which can be accessed through the Ground Water and Drinking Water Resource Center, at (202) 260-7786.

Safe Drinking Water Act

The Safe Drinking Water Act (SDWA) mandates that EPA establish regulations to protect human health from contaminants in drinking water. The law authorizes EPA to develop national drinking water standards and to create a joint Federal-State system to ensure compliance with these standards. The SDWA also directs EPA to protect underground sources of drinking water by controlling underground injection of liquid wastes.

The EPA has developed primary and secondary drinking water standards under its SDWA authority. The EPA and authorized States enforce the primary drinking water standards, which are contaminant-specific concentration limits that apply to certain public drinking water supplies. Primary drinking water standards consist of maximum contaminant level goals (MCLGs), which are non-enforceable, health-based goals, and maximum contaminant levels (MCLs), which are enforceable limits set as close to MCLGs as possible, considering cost and feasibility of attainment.

The SDWA Underground Injection Control (UIC) Program (40 CFR Parts 144-148) is a permit program that protects underground sources of drinking water by regulating five classes of injection wells. The UIC permits include design, operating, inspection, and monitoring requirements. Wells used to inject hazardous wastes must also comply with RCRA corrective action standards in order to be granted a RCRA permit and must meet applicable

RCRA land disposal restrictions standards. The UIC permit program is primarily State-enforced, since EPA has authorized all but a few States to administer the program.

The SDWA also provides for a Federally-implemented sole source aquifer program, which prohibits Federal funds from being expended on projects that may contaminate the sole or principal source of drinking water for a given area, and for a State-implemented wellhead protection program which is designed to protect drinking water wells and drinking water recharge areas.

The EPA Safe Drinking Water Hotline, at (800) 426-4791, answers questions and distributes guidance pertaining to SDWA standards. The Hotline operates from 9:00 a.m. through 5:30 p.m. ET, excluding Federal holidays.

Toxic Substances Control Act

The Toxic Substances Control Act (TSCA) granted EPA authority to create a regulatory framework to collect data on chemicals in order to evaluate, assess, mitigate, and control risks that may be posed by their manufacture, processing, and use. TSCA provides a variety of control methods to prevent chemicals from posing unreasonable risk.

The TSCA standards may apply at any point during a chemical's life cycle. Under TSCA §5, EPA has established an inventory of chemical substances. If a chemical is not already on the inventory and has not been excluded by TSCA, a premanufacture notice (PMN) must be submitted to EPA prior to manufacture or import. The PMN must identify the chemical and provide available information on health and environmental effects. If available data are not sufficient to evaluate the chemical's effects, EPA can impose restrictions pending the development of information on its health and environmental effects. The EPA can also restrict significant new uses of chemicals based upon factors such as the projected volume and use of the chemical.

Under TSCA §6, EPA can ban the manufacture or distribution in commerce of, limit the use of, require labeling for, or place other restrictions on chemicals that pose unreasonable risks. Among the chemicals EPA regulates under §6 authority are asbestos, CFCs, and PCBs.

The EPA TSCA Assistance Information Service, at (202) 554-1404, answers questions and distributes guidance pertaining to TSCA standards. The Service operates from 8:30 a.m. through 4:30 p.m. ET, excluding Federal holidays.

Clean Air Act

The Clean Air Act and its amendments, including the Clean Air Act Amendments (CAAA) of 1990, are designed to "protect and enhance the nation's air resources so as to promote the public health and welfare and the productive capacity of the population." The CAA consists of six sections, known as titles, that direct EPA to establish national standards for ambient air quality and for EPA and the States to implement, maintain, and enforce these standards through a variety of mechanisms. Under the CAAA, many facilities will be required to obtain permits for the first time. State and local governments oversee, manage, and enforce many of the requirements of the CAAA. The CAA regulations appear at 40 CFR Parts 50-99.

Pursuant to Title I of the CAA, EPA has established NAAQS to limit levels of criteria pollutants, including carbon monoxide (CO), lead (Pb), NO_2, PM, ozone, SO_2, and volatile organic compounds (VOCs). Geographic areas that meet NAAQS for a given pollutant are classified as attainment areas; those that do not meet NAAQS are classified as non-attainment areas. Under section 110 of the CAA, each State must develop a State Implementation Plan (SIP) to identify sources of air pollution and to determine what reductions are required to meet Federal air quality standards. Revised NAAQS for particulates and ozone were proposed in 1996 and may go into effect as early as late 1997.

Title I also authorizes EPA to establish new source performance standards (NSPS), which are nationally uniform emission standards for new stationary sources falling within particular industrial categories. NSPS are based on the pollution control technology available to that category of industrial source.

Under Title I, EPA establishes and enforces national emission standards for hazardous air pollutants (NESHAPs), which are nationally uniform standards oriented towards controlling particular HAPs. Title I, section 112(c) of the CAA further directed EPA to develop a list of sources that emit any of 188 HAPs and to develop regulations for these categories of sources. To date, EPA has listed 174 categories and developed a schedule for the establishment of emission standards. The emission standards will be developed for both new and existing sources based on maximum achievable control technology (MACT). The MACT is defined as the control technology achieving the maximum degree of reduction in the emission of the HAPs.

Title II of the CAA pertains to mobile sources, such as cars, trucks, buses, and planes. Reformulated gasoline, automobile pollution control devices, and vapor recovery nozzles on gas pumps are a few of the mechanisms EPA uses to regulate mobile air emission sources.

Title IV of the CAA establishes a SO_2 and NO_2 emissions control program designed to reduce the formation of acid rain. Reduction of sulfur dioxide releases will be obtained by granting to certain sources limited emissions allowances, which, beginning in 1995, will be set below previous levels of SO_2 sulfur dioxide releases. Reduction of nitrogen will be obtained by required reduction of nitrogen oxides from power plants and new cars.

Title V of the CAA of 1990 created a permit program for all "major sources" (and certain other sources) regulated under the CAA. One purpose of the operating permit is to include in a single document all air emissions requirements that apply to a given facility. States are developing the permit programs in accordance with guidance and regulations from EPA. Once EPA approves a State program that state will issue and monitor permits.

Title VI of the CAA is intended to protect stratospheric ozone by phasing out the manufacture of ozone-depleting chemicals and restrict their use and distribution. Production of Class I substances, including 15 kinds of CFCs and chloroform, were phased out (except for essential uses) in 1996.

The EPA Clean Air Technology Center, at (919) 541-0800, provides general assistance and information on CAA standards. The Stratospheric Ozone Information Hotline, at (800) 296-1996, provides general information about regulations promulgated under Title VI of the CAA, and the EPA EPCRA Hotline, at (800) 535-0202, answers questions about accidental release prevention under CAA §112(r). In addition, the Clean Air Technology Center's website includes recent CAA rules, EPA guidance documents, and updates of EPA activities (http://www.epa.gov/ttn then select Directory and then CATC).

VI.B Industry Specific Requirements

Since the 1960s, there has been an increased public awareness that industrial growth, as well as its inherent need for energy produced using fossil fuels, is accompanied by the release of potentially harmful pollutants into the environment. Hence, the fossil fuel electric power generation industry has become one of the most highly regulated industries. In addressing environmental issues, the industry has moved from providing not only the lowest cost energy, to providing the lowest cost energy with an acceptable impact on the environment. Air pollution control has been of most concern, with a significant percentage of the cost of a power plant going towards the purchase of air pollution control equipment. However, control of hazardous effluent discharges and proper management and disposal of solid wastes have also been key concerns. This section summarizes the current major Federal regulations affecting the fossil fuel electric power generation industry.

National Environmental Policy Act

The National Environmental Policy Act of 1969 (NEPA) applies to all Federal agencies and to Federal actions that may significantly impact the environment. The NEPA requires that all Federal agencies prepare detailed statements assessing the environmental impact of, and alternatives to, major Federal actions that may significantly affect the quality of the human environment. Implementing regulations are issued by the Council on Environmental Quality (CEQ) at 40 CFR Parts 1500-1508. NEPA implementing regulations that are most applicable to the fossil fuel electric power generation industry can be found at 40 CFR Part 6 (EPA) and 10 CFR Part 1021 (DOE). Each government agency has issued its own implementing regulations under NEPA. The types of Federal activities associated with fossil fuel electric power generating facilities that may be subject to NEPA requirements include siting, construction, and operations of federally owned facilities, federally issued NPDES, RCRA, and air permits, and federally issued operation licenses.

Each Federal activity subject to NEPA must follow certain environmental review procedures. If there is enough information to determine at the outset that the Federal action will cause a significant effect on the environment, then an environmental impact statement (EIS) must be prepared. If there is insufficient information available, an environmental assessment (EA) must be prepared to assist the agency in determining if the impacts are significant enough to require an EIS. If the assessment shows the impacts not to be significant, the agency must prepare a finding of no significant impact (FONSI). Further stages of the Federal activity may then be excluded from the NEPA requirements.

Clean Air Act

Numerous existing standards and programs under the Clean Air Act may affect the fossil fuel electric power generation industry. These regulations and programs include Title I New Source Performance Standards, Title III National Emissions Standards for Hazardous Air Pollutants, Title IV Acid Rain Program, and Title V Operating Permits Program. The NAAQS under Title I may affect the industry indirectly through permits.

National Ambient Air Quality Standards

Regulations for NAAQS do not directly affect the fossil fuel electric power generation industry because they are not applied to sources. Rather, these standards are applied to the ambient air in a particular area. Fossil fuel electric power generators may be indirectly affected by these standards if

they are located in or near an area with nonattainment status. In meeting NAAQS, States develop and implement SIPs that prescribe use of reasonably available control technologies (RACTs) for major sources. In addition, as fossil fuel electric power generation facilities are typically one of the largest emitters of criteria pollutants, they may be targeted for more stringent controls implemented through operating permits.

The NAAQS currently exist for the following criteria pollutants (40 CFR Part 50): PM_{10}, SO_2, CO, Pb, ozone, and NO_X.

On July 16, 1997, new and/or revised standards for particulate matter and ozone were promulgated. The regulations revise the current primary standard by adding a new annual $PM_{2.5}$ (or PM "fine") standard set at 15 micrograms per cubic meter ($\mu g/m^3$) and a new 24-hour $PM_{2.5}$ standard set at 65 $\mu g/m^3$. These regulations revise the current 1-hour primary standard for ground level ozone by adding an 8-hour standard set at 0.08 ppm (the 1-hour standard will eventually be phased out).

Among the tools proposed for implementing these new ambient standards is a trading plan for emissions from utilities. The new standards will require local controls in 2004 for ozone and 2005 for particulate matter, with compliance by 2007 and 2008, respectively.

A group called the Ozone Transport Assessment Group (OTAG) was formed between EPA, the Environmental Council of States, and various industry and environmental groups. The primary objective of OTAG is the collective assessment of the ozone transport problem and the development of a strategy for reducing ozone pollution on a regional scale.

New Source Review and New Source Performance Standards

New source review (NSR) requirements in 40 CFR §52.21(b)(1)(I)(a)-(b) apply to all new facilities and may apply to expansions of existing facilities or process modifications. The NSRs are typically conducted by State agencies in accordance with their SIP. SIPs are the primary tool for meeting NAAQS and are administered through State and local agencies.

Prevention of significant deterioration (PSD) reviews are performed for areas meeting NAAQS. Nonattainment reviews are performed for areas violating the NAAQS. In nonattainment areas, permits may be issued to require new sources to meet lowest achievable emission rate (LAER) standards. Operators of the new sources must procure reductions in emission of the same pollutants from other sources in the nonattainment area in equal or greater amounts to the emissions from the new source. These "emission

offsets" may be banked and traded through the State agencies. In PSD areas, permits require the best available control technology (BACT), and the operator must conduct continuous air monitoring for one year prior to the startup of the new source to determine the effects that the new emissions may have on air quality.

Under NSPS, given at 40 CFR Part 60, EPA sets standards for LAER and BACT for the following subcategories of the fossil fuel electric power generation industry:

- Subpart D: Standards of Performance for Fossil-Fuel-Fired Steam Generators for Which Construction Is Commenced After August 17, 1971
- Subpart Da: Standards of Performance for Fossil-Fuel-Fired Steam Generators for Which Construction Is Commenced After September 18, 1978
- Subpart Db: Standards of Performance for Industrial-Commercial-Institutional Steam Generating Units
- Subpart Dc: Standards of Performance for Small Industrial-Commercial-Institutional Steam Generating Units
- Subpart GG: Standards of Performance for Stationary Gas Turbines.

The standards in each subcategory apply to units of a specified size and age. Table 36 provides the NSPS.

Table 36: New Source Performance Standards

Emission	Standards
SO_2	General standard for various levels of ng/J (lb/mm Btu) heat input and % reduction, depending on fuel type and sulfur content (see 40 CFR Subparts D, Da, Db, and Dc). For gas turbines, no gases in excess of 0.015% by volume (at 15% O_2 by volume) or with sulfur contents in excess of 0.8% by weight shall be burned.
NO_X	Between 0.2 and 0.8 lb/mm BTU, depending on category of combustion. For gas turbines, NO_X standards specified in equation in 60.332(a)(1) or (2) as directed in 60.332(b), (c), and (d).
PM	Between 0.05 and 0.20 lb/mm BTU, unless a low nitrogen fuel is used, in which case compliance is based on results of performance tests.
Opacity	20%.

National Emission Standards for Hazardous Air Pollutants

Current regulations at 40 CFR Part 61 provide standards for eight substances identified as air toxics: vinyl chloride, mercury, beryllium, radon, radionuclides, benzene, asbestos, and arsenic. Under Title III of the CAA, EPA is required to identify source categories of 188 HAPs or toxic air pollutants and then issue (at 40 CFR Part 63) MACT standards for each source category according to a prescribed schedule. The standards are to be based on best demonstrated control technologies or practices within the regulated industry. Eight years after a MACT is installed on a source, EPA is required to evaluate the risk levels remaining at the facilities and determine whether additional controls are needed to reduce the risk to acceptable levels.

The EPA has issued an initial list of categories of major and area sources that will be subject to regulation under Section 112 (57 FR 31576). The list contains numerous sources from the fossil fuel electric power generation industry, and standards are currently being developed under the Industrial Combustion Coordinated Rulemaking (see Section VI.C.).

Acid Rain Program

The 1990 amendments to the CAA added a new provision (Title IV) to control acid deposition. Title IV of the CAAA sets primary goals to reduce annual emissions of both SO_2 and NO_2.

Upwards of 20 million tons of SO_2 are emitted annually in the United States. Most of this amount is from the burning of fossil fuels by electric utilities. Because acid rain is a problem, Title IV requires EPA to reduce SO_2 emissions to 10 million tons below the 1980 level. Reduction in SO_2 will be attained in two phases by a marketable emission allowance program (40 CFR Part 73). Phase I, which became effective in January 1995, required 110 power plants to reduce their emissions to a level equivalent to the product of an emissions rate of 2.5 pounds (lbs) of SO_2/mmBtu times an average of their 1985-1987 fuel use. Plants that use certain control technologies to meet the Phase I reduction requirements received a 2-year extension of compliance until 1997. The new law also allows for special allocation of 200,000 annual allowances per year, in each of the 5 years of Phase I, to power plants in Illinois, Indiana, and Ohio.

Under the new requirements, utilities may trade allowances within their systems and/or buy or sell allowances to and from other affected sources. Phase I facilities were allocated allowances based on historic fuel consumption and a specific emission rate. One allowance equals the right to emit one ton of SO_2. Affected facilities are required to turn into the EPA one

allowance for each ton emitted in a calendar year. Unused allowances may be sold, traded, or banked by the facilities. Power plants that do not have sufficient allowances to cover annual emissions are subject to fees and requirements to offset the excess emissions the following year.

Power plants that emit less than 1.2 lbs of SO_2/mmBtu are allowed to increase emissions by 20 percent until the year 2000.

Phase II of the CAAA SO_2 reduction requirement becomes effective January 1, 2000, and affects all utilities generating at least 25 MW of electricity. These requirements require approximately 2,128 electric power utilities to reduce emissions to a level equivalent to the product of an emissions rate of 1.2 lbs of SO_2/mmBtu times the average of their 1985-1987 fuel use. SO_2 emissions from electric utilities will be capped at 8.95 million tons per year.

Title IV of the CAAA requires a 2 million ton reduction in NO_X emissions from 1980 levels. The EPA has developed regulations to help reduce NO_X emissions that may affect the fossil fuel electric power generation industry. As in the SO_2 reduction program, the NO_X Emission Reduction Program is being implemented in two phases for two categories of coal-fired electric utility boilers. The NO_X program differs from the SO_2 program in that it neither "caps" the NO_X emissions, nor utilizes an allowance trading system.

Phase I of the program for "Group I" boilers was effective on January 1, 1996, and affected dry-bottom wall fired boilers and tangentially fired boilers that are required to meet NO_X performance standards (40 CFR Part 76). Regulations for Phase II of the NO_X reduction program were promulgated in December 1996. These rules become effective in the year 2000. These regulations set lower emission limits for Group 1 boilers. In addition, the regulation establishes initial NO_X emission limitations for Group 2 boilers. Group 2 boilers include boilers applying cell burner technology, cyclone boilers, wet bottom boilers, and other types of coal-fired boilers.

Facilities covered by the Acid Rain Program must apply for an Acid Rain Permit. Most utilities must apply for permits in either Phase I or Phase II of the program. Two categories of utility units may be eligible for exemption: small new units burning clean fuels and retired units. Some cogeneration units are not covered under the program.

To support the mandated reductions in SO_2 and NO_X, the 1990 CAAA also required EPA to issue regulations requiring facilities to install continuous emissions monitoring systems (40 CFR Part 75). Fossil fuel electric power generation units over 25 megawatts and new units under 25 megawatts that

use fuel with a sulfur content greater than .05 percent by weight are required to measure and report emissions under the Acid Rain Program.

Federal/State Operating Permits Programs

Title V of the CAAA requires the development of a comprehensive permitting program to control air emissions from major stationary sources. Major sources include those that emit 100 tons/year or more of VOCs or criteria pollutants, 10 tons/year or more of any single toxic air pollutant, or 25 tons/year or more of a combination of toxic air pollutants. This program is modeled after the NPDES program under the CWA and serves to bring together all of the requirements concerning air emissions that apply to affected sources. Like the NPDES program, administration of the operating permit program is also delegated to States with approved programs.

This program requires all significant sources of air emissions to obtain permits. In general, utility fossil fuel steam electric power plants are all considered major sources, so they will most likely be required to obtain permits. Other types of fossil fuel electric power generation facilities, such as those employing small gas turbines, may not be considered a major source and may not be required to apply for a permit. Any operational change that increases emissions above specified limits will most likely necessitate permit modifications. Permit terms are determined by State regulations for delegated programs but may not exceed 5 years.

Clean Water Act

Wastewater discharges from fossil fuel electric power generation facilities released to waters of the United States are covered under the CWA. Any point source discharge is required to apply for, and obtain, an NPDES permit (40 CFR Part 122). Permits may be issued by EPA or a State, depending upon whether the State has a delegated program. The NPDES permits serve to regulate point source discharges by establishing pollutant limitations and other special conditions. Facilities discharging to a POTW may be required to obtain a permit from a POTW that has an approved pretreatment program.

Current technology-based effluent limitations guidelines and pretreatment standards for discharges from the steam electric generating point source category were promulgated in 1982 (40 CFR Part 423). The waste streams covered and parameters limited are summarized in Table 37 below.

Table 37: Waste Streams and Pollutants Regulated Under National Effluent Limitation Guidelines for the Steam Electric Generating Point Source Category

Type of Waste Stream	BAT Effluent Limitations Guidelines
All discharges	pH , PCBs
Bottom ash transport waters and low volume waste sources	TSS, oil and grease
Chemical boiler metal cleaning wastes	TSS, oil and grease, iron, and copper
Non-chemical metal cleaning wastes	Reserved (low volume wastewater limits apply)
Fly ash transport water (including economizer ash)	No discharge allowed (based on the availability of dry disposal methods and the potential for reuse of fly ash transport water)
Once-through cooling water	Total residual chlorine (TRC) or free available chlorine (FAC), depending on facility's generating capacity
Cooling tower blowdown	FAC, chromium, zinc, other 126 priority pollutants where they are found in chemicals used for cooling tower maintenance
Coal pile runoff	TSS

In general, steam electric facilities built after 1982 are considered new sources and must comply with the 1982 effluent limitations. Less stringent guidelines may apply for facilities constructed between 1974 and 1982 (see 1974 guidelines and standards). Steam electric generating facilities that have been repowered are considered new sources.

Steam electric facilities that discharge to a POTW may be required to meet pretreatment standards for existing sources (PSES) or for new sources (PSNS). General pretreatment standards applying to most industries discharging to a POTW are described in 40 CFR Part 403. Pretreatment standards applying specifically to the steam electric generating point source category are listed in 40 CFR §§423.16 and 17.

Beyond the applicable technology-based effluent limitations described above, permits may also establish technology-based limits for other pollutants based on the application of best professional judgement (BPJ). Permit limits and special conditions may also be established based on water quality considerations. Thermal limitations are often placed in permits for steam electric power plants based on Section 316(a) of the CWA and water quality considerations. Additionally, permits may require the performance of a demonstration study and implementation of control technologies to minimize adverse environmental impacts from cooling water intake structures.

Storm water discharges associated with any industrial activity onsite at a fossil fuel electric power generation facility are covered under the National

Storm Water Program. Steam electric power generating activities are listed as one of the categories of industrial activities subject to the storm water permit application requirements (category vii). The regulations at 40 CFR Part 122.26 require facilities discharging storm water from 1 of the 11 categories of industrial activities to apply for a storm water permit if the storm water discharges to waters of the United States. In most permits, facilities are required to develop and implement a storm water pollution prevention plan. However, limitations and other special conditions may be included on a case-by-case basis. Some permits may include the numeric effluent limitation guideline for coal pile runoff. Storm water discharges associated with other industrial activities at fossil fuel electric power generation facilities are typically not subject to numeric limits, however.

Resource Conservation and Recovery Act

The 1980 Solid Waste Disposal Act Amendments conditionally exempted from regulation under Subtitle C large volume wastes, including fly ash waste, bottom ash waste, boiler slag waste, and flue gas emission control waste generated primarily from the combustion of coal or other fossil fuels (RCRA §3001). Section 8002(n) of RCRA directed EPA to study these wastes.

In 1993, EPA issued a regulatory determination addressing large volume wastes (fly ash, bottom ash, boiler ash, boiler slag, and flue gas emission control wastes) generated by coal-fired utility power plants, including independent power producers not engaged in any other industrial activity. The regulatory determination stated that these wastes should not be regulated as Subtitle C wastes when they are managed separately from other wastes. A similar determination for other large volume fossil fuel combustion wastes and co-managed wastes was deferred pending additional studies.

Wastes exempt from hazardous waste regulation (currently all wastes from fossil fuel combustion) are addressed by Subtitle D of RCRA (for nonhazardous solid wastes). There are currently no Federal nonhazardous waste regulations. As a result, fossil fuel electric power generation waste management is addressed solely by the States, either through their general industrial solid waste programs or through specific programs for fossil fuel combustion wastes. These State programs vary considerably.

Subtitle I of RCRA has stringent requirements for underground petroleum and hazardous substances storage tank (UST) systems with 110-gallon or greater capacity. Any storage of fuels in USTs onsite at a fossil fuel electric power generation facility would be covered under these regulations at 40 CFR Part 280.

Subtitle C of RCRA provides for a comprehensive cradle to grave system of management for hazardous waste and includes rules governing waste disposal on land; recycling and generators; and treatment, storage, or disposal facilities (TSDFs). Low volume fossil fuel combustion wastes not co-managed with ash, slag, or flue gas desulfurization wastes and other wastes that are not directly associated with the combustion process are not exempted from hazardous waste regulation. As such, they are hazardous wastes if they are listed as hazardous wastes from non-specific sources (e.g., spent solvents) or if they exhibit one or more of the RCRA hazardous waste characteristics of toxicity, corrosivity, reactivity, and ignitability. The identification of specific listed wastes and the definitions of the hazardous waste characteristics are listed in 40 CFR Part 261.

Fossil fuel electric power generating plants do not typically generate large quantities of hazardous waste. Furthermore, the requirements and costs of operating an onsite hazardous waste TSDF are extensive. Therefore, most electric power generating facilities send any generated hazardous waste to offsite RCRA-permitted commercial TSDFs for permanent disposal.

Some steam electric power generating plants co-fire their boilers with hazardous wastes (e.g., spent solvents), along with their primary fossil fuel source. Such facilities are subject to RCRA regulation under the BIF Rule (40 CFR Part 266, Subpart H). The BIF Rule includes operating condition requirements, as well as testing requirements, for air emissions and residuals to ensure adequate destruction of toxic constituents.

Emergency Planning and Community Right-to-Know Act

In a recent rulemaking (62 FR 23834, May 1, 1997), EPA expanded the list of industry groups subject to reporting requirements under Section 313 of EPCRA (61 FR 33587). The expanded list of industry groups includes electric utilities classified in the following SIC codes: 4911 Electric Services, 4931 Electric and Other Services Combined, and 4939 Combination Utilities, Not Elsewhere Classified. EPCRA Section 313 now requires electric generating facilities that combust coal and/or oil for the purpose of generating electricity for distribution in commerce to evaluate their chemical use and management activities to determine potential reporting responsibilities. Section 313 establishes annual requirements for amounts released and otherwise managed of "section 313 chemicals" (a list of more than 650 chemicals and chemical categories).

For each Section 313 chemical or chemical category, covered facilities must report total routine and accidental amounts entering each environmental media, as well as onsite waste management via, and offsite transfers for,

disposal, waste treatment, energy recovery and recycling, and onsite source reduction activities. This information is submitted on the TRI reporting form called Form R if the facility has met or exceeded certain thresholds. The first period of reporting for this industry will be on or before July 1, 1999, for the period from January 1 to December 31, 1998. Reporting will be required annually thereafter. For additional information on these new TRI reporting requirements, contact the Emergency Planning and Right-to-Know Hotline at (800) 535-0202 (in Virginia and Alaska (703) 412-9877; TDD (800) 553-7672).

VI.C Pending and Proposed Regulatory Requirements

Clean Air Act Amendments of 1990

Hazardous Air Pollutants

In response to requirements under Section 112 of the CAA as well as Section 129, EPA is developing a unified set of Federal air emission regulations for industrial combustion sources. This rulemaking effort is being called the Industrial Combustion Coordinated Rulemaking (ICCR).

The ICCR will cover sources from industrial/institutional/commercial boiler, process heaters, industrial/commercial and other solid waste (not including hazardous, medical, or large municipal) incinerators, stationary gas turbines, and stationary internal combustion engines. These sources are not limited to use of fossil fuels and have the potential to emit both HAPs and criteria pollutants. This rulemaking effort will produce approximately seven separate regulations, six of which are expected to be finalized by November 2000. For additional information on the ICCR, contact Fred Porter, U.S. EPA Office of Air and Radiation, at (919) 541-5251.

Section 112(n) requires that EPA perform studies to evaluate the health risks associated with emissions of toxic air pollutants from electric utility steam generating units. Electric utility steam generating units are defined as any fossil fuel-fired combustion unit of more than 25 MW electric that serves a generator that produces electricity for sale. Cogenerators that supply more than one-third of their potential electric output capacity and more than 25 MW output to any utility power distribution system for sale will also be covered. A preliminary study has been completed and was issued as an interim final in October 1996. Additional studies will be performed, as well as an in-depth study of potential public health concerns due to mercury emissions from utilities. These findings will be published in a report to Congress at a later date and will include costs and technologies available to control these emissions and recommendations as to whether regulations are needed for air toxics emissions from this industry. For additional

information on this study, contact Bill Maxwell, U.S. EPA Office of Air and Radiation, at (919) 541-5430.

Clean Water Act

Effluent Limitations Guidelines and Standards and Pretreatment Standards for the Steam Electric Point Source Category

The existing 1982 effluent limitations guidelines and standards and pretreatment standards for wastewater discharges from the Steam Electric Point Source Category are currently being reviewed by the Office of Water. A preliminary study has been completed by the Office of Water to evaluate the guidelines and standards based on current technical feasibility, environmental factors, economic impacts, and utility to permit writers. The study was performed because the steam electric power generating industrial category is considered as a candidate for possible regulatory revisions in the future. For additional information, contact Joe Daly, U.S. EPA Office of Water, at (202) 260-7186.

Cooling Water Intake Structure Regulations

Section 316(b) of the Clean Water Act requires that "...any standard established pursuant to Section 301 or 306... and applicable to a point source shall require that the location, design construction, and capacity of cooling water intake structures reflect the best technology available for minimizing adverse environmental impact." Since fossil fuel electric power generators with steam turbines withdraw by far the greatest quantity of cooling water of any single industrial sector, it is expected that this industry will be the most affected by this requirement. Although some EPA regions and States have developed programs to minimize impacts from cooling water structures, no uniform national standards or implementing regulations are currently in force. As set forth in a consent decree (*Cronin v. Browner)*, EPA has initiated the information collection activities needed to develop proposed regulations to address impacts from the intake of cooling water by 1999. Final EPA action is scheduled for the year 2001. For additional information on the Section 316(b) rulemaking effort, contact Deborah Nagle, U.S. EPA Office of Water, at (202) 260-2656.

Resource Conservation and Recovery Act

A regulatory determination on whether large volume wastes at utility oil-fired, nonutility coal- and oil-fired, and fluidized bed combustion power plants and co-managed large volume wastes at all utility and nonutility coal- and oil-fired electric generation facilities should be considered hazardous wastes under Subtitle C is expected to be finalized in 1998, pending

additional data collection. For additional information, contact Dennis Ruddy, U.S. EPA Office of Solid Waste, at (703) 308-8430.

VII. COMPLIANCE AND ENFORCEMENT HISTORY

Until recently, EPA has focused much of its attention on measuring compliance with specific environmental statutes. This approach allows the EPA to track compliance with CAA, RCRA, CWA, and other environmental statutes. Within the last several years, the EPA has begun to supplement single-media compliance indicators with facility-specific, multimedia indicators of compliance. In doing so, EPA is in a better position to track compliance with all statutes at the facility level and within specific industrial sectors.

A major step in building the capacity to compile multimedia data for industrial sectors was the creation of EPA's IDEA system. The IDEA has the capacity to "read into" EPA's single-media databases, extract compliance records, and match the records to individual facilities. The IDEA system can match air, water, waste, toxics/pesticides/EPCRA, TRI, and enforcement docket records for a given facility and generate a list of historical permit, inspection, and enforcement activity. IDEA also has the capability to analyze data by geographic area and corporate holder. As the capacity to generate multimedia compliance data improves, EPA will make available more in-depth compliance and enforcement information. Additionally, sector-specific measures of success for compliance assistance efforts are being developed.

Compliance and Enforcement Profile Description

Using inspection, violation and enforcement data from the IDEA system, this section provides information regarding the historical compliance and enforcement activity of this sector. In order to mirror the facility universe reported in the Toxic Chemical Profile, the data reported within this section consist of records only from the TRI reporting universe. With this decision, the selection criteria are consistent across sectors with certain exceptions. For the sectors that do not normally report to the TRI program, data have been provided from EPA's Facility Indexing System (FINDS) which tracks facilities in all media databases. Please note, in this section, EPA does not attempt to define the actual number of facilities that fall within each sector. Instead, the section portrays the records of a subset of facilities within the sector that are well defined within EPA databases.

As a check on the relative size of the full sector universe, most notebooks contain an estimated number of facilities within the sector according to the Bureau of Census. For the fossil fuel electric power generation industry, statistics about the industry are collected by the DOE EIA (see Section II). With sectors dominated by small businesses, such as metal finishers and printers, the reporting universe within EPA databases may be small in

comparison to Census data. However, the group selected for inclusion in this data analysis section should be consistent with this sector's general make-up.

Following this introduction is a list defining each data column presented within this section. These values represent a retrospective summary of inspections and enforcement actions, and reflect solely EPA, State, and local compliance assurance activities that have been entered into EPA databases. To identify any changes in trends, the EPA ran two data queries: one for the past five calendar years (April 1, 1992, to March 31, 1997) and the other for the most recent 12-month period (April 1, 1996, to March 31, 1997). The 5-year analysis gives an average level of activity for that period for comparison to the more recent activity.

Because most inspections focus on single-media requirements, the data queries presented in this section are taken from single media databases. These databases do not provide data on whether inspections are state/local or led by EPA. However, the table breaking down the universe of violations does give a crude measurement of EPA's and States' efforts within each media program. The presented data illustrate the variations across EPA regions for certain sectors.[a] This variation may be attributable to state/local data entry variations, specific geographic concentrations, proximity to population centers, sensitive ecosystems, highly toxic chemicals used in production, or historical noncompliance. Hence, the exhibited data do not rank regional performance or necessarily reflect which regions may have the most compliance problems.

Compliance and Enforcement Data Definitions

Facility Indexing System - This system assigns a common facility number to EPA single-media permit records. The FINDS identification number allows EPA to compile and review all permit, compliance, enforcement, and pollutant release data for any given regulated facility.

Integrated Data for Enforcement Analysis - This data integration system can retrieve information from the major EPA program office databases. IDEA uses the FINDS identification number to link separate data records from EPA's databases. This allows retrieval of records from across media or statutes for any given facility, thus creating a "master list" of records for that facility. Some of the data systems accessible through IDEA are: AIRS (Office of Air and Radiation), PCS (Office of Water), RCRIS (Resource

[a] EPA Regions include the following states: I (CT, MA, ME, RI, NH, VT); II (NJ, NY, PR, VI); III (DC, DE, MD, PA, VA, WV); IV (AL, FL, GA, KY, MS, NC, SC, TN); V (IL, IN, MI, MN, OH, WI); VI (AR, LA, NM, OK, TX); VII (IA, KS, MO, NE); VIII (CO, MT, ND, SD, UT, WY); IX (AZ, CA, HI, NV, Pacific Trust Territories); X (AK, ID, OR, WA).

Conservation and Recovery Information System, Office of Solid Waste), NCDB (National Compliance Data Base, Office of Prevention, Pesticides, and Toxic Substances), CERCLIS (Comprehensive Environmental and Liability Information System, Superfund), and TRIS (Toxic Release Inventory System). IDEA also contains information from outside sources such as Dun and Bradstreet and the Occupational Safety and Health Administration (OSHA). Most data queries displayed in Sections IV and VII of this notebook were conducted using IDEA.

Data Table Column Heading Definitions

Facilities in Search are based on the universe of TRI reporters within the listed SIC code range. For industries not covered under TRI reporting requirements (metal mining, nonmetallic mineral mining, electric power generation, ground transportation, water transportation, and dry cleaning), or industries in which only a very small fraction of facilities report to TRI (e.g., printing), the notebook uses the FINDS universe for executing data queries. The SIC code range selected for each search is defined by each notebook's selected SIC code coverage described in Section II.

Facilities Inspected indicates the level of EPA and state agency inspections for the facilities in this data search. These values show what percentage of the facility universe is inspected in a one-year or five-year period.

Number of Inspections measures the total number of inspections conducted in this sector. An inspection event is counted each time it is entered into a single media database.

Average Time Between Inspections provides an average length of time, expressed in months, between compliance inspections at a facility within the defined universe.

Facilities with One or More Enforcement Actions expresses the number of facilities that were the subject of at least one enforcement action within the defined time period. This category is broken down further into federal and state actions. Data are obtained for administrative, civil/judicial, and criminal enforcement actions. Administrative actions include Notices of Violation (NOVs). A facility with multiple enforcement actions is only counted once in this column, e.g., a facility with three enforcement actions counts as one facility.

Total Enforcement Actions describes the total number of enforcement actions identified for an industrial sector across all environmental statutes. A facility with multiple enforcement actions is counted multiple times, e.g., a facility with three enforcement actions counts as three.

State Lead Actions shows what percentage of the total enforcement actions are taken by state and local environmental agencies. Varying levels of use by states of EPA data systems may limit the volume of actions recorded as state enforcement activity. Some states extensively report enforcement activities into EPA data systems, while other states may use their own data systems.

Federal Lead Actions shows what percentage of the total enforcement actions are taken by the United States Environmental Protection Agency. This value includes referrals from state agencies. Many of these actions result from coordinated or joint state/federal efforts.

Enforcement to Inspection Rate is a ratio of enforcement actions to inspections, and is presented for comparative purposes only. This ratio is a rough indicator of the relationship between inspections and enforcement. It relates the number of enforcement actions and the number of inspections that occurred within the one-year or five-year period. This ratio includes the inspections and enforcement actions reported under the CWA, CAA, and RCRA. Inspections and actions from the TSCA/FIFRA/ EPCRA database are not factored into this ratio because most of the actions taken under these programs are not the result of facility inspections. Also, this ratio does not account for enforcement actions arising from non-inspection compliance monitoring activities (e.g., self-reported water discharges) that can result in enforcement action within the CAA, CWA, and RCRA.

Facilities with One or More Violations Identified indicates the percentage of inspected facilities having a violation identified in one of the following data categories: In Violation or Significant Violation Status (CAA); Reportable Noncompliance, Current Year Noncompliance, Significant Noncompliance (CWA); Noncompliance and Significant Noncompliance (FIFRA, TSCA, and EPCRA); Unresolved Violation and Unresolved High Priority Violation (RCRA). The values presented for this column reflect the extent of noncompliance within the measured time frame, but do not distinguish between the severity of the noncompliance. Violation status may be a precursor to an enforcement action, but does not necessarily indicate that an enforcement action will occur.

Media Breakdown of Enforcement Actions and Inspections -- four columns identify the proportion of total inspections and enforcement actions within EPA air, water, waste, and TSCA/FIFRA/EPCRA databases. Each column is a percentage of either the "Total Inspections," or the "Total Actions" column.

VII.A Fossil Fuel Electric Power Generation Industry Compliance History

This section examines the historical enforcement and compliance data on the fossil fuel electric power generation sector. As noted earlier, these data were obtained from EPA's IDEA system. The five exhibits within this section provide both a 5-year and a 1-year review of the data from the sector and also provide data from other sectors for comparison purposes. It should be noted that the data are accessed in the IDEA database system through SIC codes. Therefore, only those facilities whose primary SIC codes indicate the potential for power generation activities can be accessed (see Section II). This means that the data retrieved from IDEA may be more inclusive (e.g., include transmission and distribution facilities). Other industry facilities that have associated power generation activities cannot be identified because their primary SIC codes do not indicate power generation.

Table 38 provides an overview of the reported compliance and enforcement data for the fossil fuel electric power generations sector over the past 5 years (April 1992 to April 1997). These data are also broken out by EPA Regions thereby permitting geographical comparisons. A few points evident from the data are listed below. As shown, 3,270 facilities were identified through IDEA with SIC codes that indicate power generation may be occurring (see discussion above). Of those, approximately 66 percent (2,166) were inspected in the last 5 years. Other points of interest include:

- 14,210 inspections were conducted over the last 5 years. Of the 3,166 facilities inspected, on average, each received over 6 inspections in the past 5-year period.

- The 14,210 inspections resulted in 403 facilities having enforcement actions taken against them. At those 403 facilities, there were a total of 789 enforcement actions; therefore, each facility averaged nearly 2 enforcement actions over the 5-year period.

- The average enforcement to inspection rate is 0.06, with the rate across the regions ranging from 0.02 to 0.13. There appears to be no correlation between State versus Federal lead on the inspections and the enforcement to inspection rate.

Table 38: Five-Year Enforcement and Compliance Summary for the Fossil Fuel Electric Power Industry

A	B	C	D	E	F	G	H	I	J
Region	Facilities in Search	Facilities Inspected	Number of Inspections	Average Months Between Inspections	Facilities with 1 or More Enforcement Actions	Total Enforcement Actions	Percent State Lead Actions	Percent Federal Lead Actions	Enforcement to Inspection Rate
I	250	140	664	23	36	55	84%	16%	0.08
II	269	199	1,455	11	75	187	84%	16%	0.13
III	305	221	1,997	9	57	130	87%	13%	0.07
IV	559	353	3,039	11	45	84	82%	18%	0.03
V	552	344	2,287	14	76	134	69%	31%	0.06
VI	315	222	1,079	18	30	61	54%	46%	0.06
VII	409	259	1,170	21	22	28	36%	64%	0.02
VIII	134	91	643	13	15	35	60%	40%	0.05
IX	273	251	1622	10	38	57	84%	16%	0.04
X	204	86	254	48	9	18	61%	39%	0.07
TOTAL	3,270	2,166	14,210	14	403	789	76%	24%	0.06

VII.B Comparison of Enforcement Activity Between Selected Industries

Tables 39 and 40 allow the compliance history of the fossil fuel electric power generation sector to be compared to the other industries covered by the industry sector notebooks. Comparisons between Tables 39 and 40 permit the identification of trends in compliance and enforcement records of the various industries by comparing data covering the last 5 years (April 1992 to April 1997) to that of the past year (April 1996 to April 1997). As shown in the data, the 3,270 fossil fuel electric power generation facilities is the sixth largest number of facilities identified through IDEA, with ground transportation having the most facilities with 7,786. However, while approximately 66 percent of the fossil fuel electric power generation facilities have been inspected in the past 5 years, only 41 percent of the ground transportation facilities have been inspected. Other points of interest from the 5-year summary include:

- The number of inspections over the past 5 years for fossil fuel electric power generation facilities (14,210) is more than 3 times the amount conducted in most other sectors.

- The enforcement to inspection rate of 0.06 over the past 5 years is one of the lower rates of the listed sectors.

Points of interest from the 1-year summary include:

- The 1,318 fossil fuel electric power generation facilities inspected in the past year places this sector among the top four sectors for number of facilities inspected.

- The total number of inspections in this sector is 2,430 which compares with the number of inspections performed in the ground transportation and non-metallic mining sectors, but is 1.5 to 17 times more than the other sectors which range from 1,436 down to 141.

- The enforcement to inspection rate of 0.06 is about average among all the sectors, with the lowest being 0.01 (dry cleaning) and the highest being 0.23 (petroleum refining). This is relatively constant with the 5-year average for the fossil fuel electric power generation sector.

Tables 41 and 42 provide a more in-depth comparison between the fossil fuel electric power generation sector and others by organizing inspection and enforcement data by environmental statute. As in the previous Tables (Tables 39 and 40), the data cover the last 5 years (Table 41) and the last

Table 39: Five-Year Enforcement and Compliance Summary for Selected Industries

A	B	C	D	E	F	G	H	I	J
Industry Sector	Facilities in Search	Facilities Inspected	Number of Inspections	Average Months Between Inspections	Facilities with 1 or More Enforcement Actions	Total Enforcement Actions	Percent State Lead Actions	Percent Federal Lead Actions	Enforcement to Inspection Rate
Metal Mining	1,232	378	1,600	46	63	111	53%	47%	0.07
Coal Mining	3,256	741	3,748	52	88	132	89%	11%	0.04
Oil and Gas Extraction	4,676	1,902	6,071	46	149	309	79%	21%	0.05
Non-Metallic Mineral Mining	5,256	2,803	12,826	25	385	622	77%	23%	0.05
Textiles	355	267	1,465	15	53	83	90%	10%	0.06
Lumber and Wood	712	473	2,767	15	134	265	70%	30%	0.10
Furniture	499	386	2,379	13	65	91	81%	19%	0.04
Pulp and Paper	484	430	4,630	6	150	478	80%	20%	0.10
Printing	5,862	2,092	7,691	46	238	428	88%	12%	0.06
Inorganic Chemicals	441	286	3,087	9	89	235	74%	26%	0.08
Resins and Manmade Fibers	329	263	2,430	8	93	219	76%	24%	0.09
Pharmaceuticals	164	129	1,201	8	35	122	80%	20%	0.10
Organic Chemicals	425	355	4,294	6	153	468	65%	35%	0.11
Agricultural Chemicals	263	164	1,293	12	47	102	74%	26%	0.08
Petroleum Refining	156	148	3,081	3	124	763	68%	32%	0.25
Rubber and Plastic	1,818	981	4,383	25	178	276	82%	18%	0.06
Stone, Clay, Glass and Concrete	615	388	3,474	11	97	277	75%	25%	0.08
Iron and Steel	349	275	4,476	5	121	305	71%	29%	0.07
Metal Castings	669	424	2,535	16	113	191	71%	29%	0.08
Nonferrous Metals	203	161	1,640	7	68	174	78%	22%	0.11
Fabricated Metal Products	2,906	1,858	7,914	22	365	600	75%	25%	0.08
Electronics	1,250	863	4,500	17	150	251	80%	20%	0.06
Automobile Assembly	1,260	927	5,912	13	253	413	82%	18%	0.07
Shipbuilding and Repair	44	37	243	9	20	32	84%	16%	0.13
Ground Transportation	7,786	3,263	12,904	36	375	774	84%	16%	0.06
Water Transportation	514	192	816	38	36	70	61%	39%	0.09
Air Transportation	444	231	973	27	48	97	88%	12%	0.10
Fossil Fuel Electric Power	3,270	2,166	14,210	14	403	789	76%	24%	0.06
Dry Cleaning	6,063	2,360	3,813	95	55	66	95%	5%	0.02

Table 40: One-Year Enforcement and Compliance Summary for Selected Industries

A	B	C	D	E		F		G	H
Industry Sector	Facilities in Search	Facilities Inspected	Number of Inspections	Facilities with 1 or More Violations		Facilities with 1 or more Enforcement Actions		Total Enforcement Actions	Enforcement to Inspection Rate
				Number	Percent*	Number	Percent*		
Metal Mining	1,232	142	211	102	72%	9	6%	10	0.05
Coal Mining	3,256	362	765	90	25%	20	6%	22	0.03
Oil and Gas Extraction	4,676	874	1,173	127	15%	26	3%	34	0.03
Non-Metallic Mineral Mining	5,256	1,481	2,451	384	26%	73	5%	91	0.04
Textiles	355	172	295	96	56%	10	6%	12	0.04
Lumber and Wood	712	279	507	192	69%	44	16%	52	0.10
Furniture	499	254	459	136	54%	9	4%	11	0.02
Pulp and Paper	484	317	788	248	78%	43	14%	74	0.09
Printing	5,862	892	1,363	577	65%	28	3%	53	0.04
Inorganic Chemicals	441	200	548	155	78%	19	10%	31	0.06
Resins and Manmade Fibers	329	173	419	152	88%	26	15%	36	0.09
Pharmaceuticals	164	80	209	84	105%	8	10%	14	0.07
Organic Chemicals	425	259	837	243	94%	42	16%	56	0.07
Agricultural Chemicals	263	105	206	102	97%	5	5%	11	0.05
Petroleum Refining	156	132	565	129	98%	58	44%	132	0.23
Rubber and Plastic	1,818	466	791	389	83%	33	7%	41	0.05
Stone, Clay, Glass and Concrete	615	255	678	151	59%	19	7%	27	0.04
Iron and Steel	349	197	866	174	88%	22	11%	34	0.04
Metal Castings	669	234	433	240	103%	24	10%	26	0.06
Nonferrous Metals	203	108	310	98	91%	17	16%	28	0.09
Fabricated Metal	2,906	849	1,377	796	94%	63	7%	83	0.06
Electronics	1,250	420	780	402	96%	27	6%	43	0.06
Automobile Assembly	1,260	507	1,058	431	85%	35	7%	47	0.04
Shipbuilding and Repair	44	22	51	19	86%	3	14%	4	0.08
Ground Transportation	7,786	1,585	2,499	681	43%	85	5%	103	0.04
Water Transportation	514	84	141	53	63%	10	12%	11	0.08
Air Transportation	444	96	151	69	72%	8	8%	12	0.08
Fossil Fuel Electric Power	3,270	1,318	2,430	804	61%	100	8%	135	0.06
Dry Cleaning	6,063	1,234	1,436	314	25%	12	1%	16	0.01

Table 41: Five-Year Inspection and Enforcement Summary by Statute for Selected Industries

Industry Sector	Facilities Inspected	Total Inspections	Total Enforcement Actions	Clean Air Act		Clean Water Act		RCRA		FIFRA/TSCA/ EPCRA/Other	
				% of Total Inspections	% of Total Actions	% of Total Inspections	% of Total Actions	% of Total Inspections	% of Total Actions	% of Total Inspections	% of Total Actions
Metal Mining	378	1,600	111	39%	19%	52%	52%	8%	12%	1%	17%
Coal Mining	741	3,748	132	57%	64%	38%	28%	4%	8%	1%	1%
Oil and Gas Extraction	1,902	6,071	309	75%	65%	16%	14%	8%	18%	0%	3%
Non-Metallic Mineral Mining	2,803	12,826	622	83%	81%	14%	13%	3%	4%	0%	3%
Textiles	267	1,465	83	58%	54%	22%	25%	18%	14%	2%	6%
Lumber and Wood	473	2,767	265	49%	47%	6%	6%	44%	31%	1%	16%
Furniture	386	2,379	91	62%	42%	3%	0%	34%	43%	1%	14%
Pulp and Paper	430	4,630	478	51%	59%	32%	28%	15%	10%	2%	4%
Printing	2,092	7,691	428	60%	64%	5%	3%	35%	29%	1%	4%
Inorganic Chemicals	286	3,087	235	38%	44%	27%	21%	34%	30%	1%	5%
Resins and Manmade Fibers	263	2,430	219	35%	43%	23%	28%	38%	23%	4%	6%
Pharmaceuticals	129	1,201	122	35%	49%	15%	25%	45%	20%	5%	5%
Organic Chemicals	355	4,294	468	37%	42%	16%	25%	44%	28%	4%	6%
Agricultural Chemicals	164	1,293	102	43%	39%	24%	20%	28%	30%	5%	11%
Petroleum Refining	148	3,081	763	42%	59%	20%	13%	36%	21%	2%	7%
Rubber and Plastic	981	4,383	276	51%	44%	12%	11%	35%	34%	2%	11%
Stone, Clay, Glass and Concrete	388	3,474	277	56%	57%	13%	9%	31%	30%	1%	4%
Iron and Steel	275	4,476	305	45%	35%	26%	26%	28%	31%	1%	8%
Metal Castings	424	2,535	191	55%	44%	11%	10%	32%	31%	2%	14%
Nonferrous Metals	161	1,640	174	48%	43%	18%	17%	33%	31%	1%	10%
Fabricated Metal	1,858	7,914	600	40%	33%	12%	11%	45%	43%	2%	13%
Electronics	863	4,500	251	38%	32%	13%	11%	47%	50%	2%	7%
Automobile Assembly	927	5,912	413	47%	39%	8%	9%	43%	43%	2%	9%
Shipbuilding and Repair	37	243	32	39%	25%	14%	25%	42%	47%	5%	3%
Ground Transportation	3,263	12,904	774	59%	41%	12%	11%	29%	45%	1%	3%
Water Transportation	192	816	70	39%	29%	23%	34%	37%	33%	1%	4%
Air Transportation	231	973	97	25%	32%	27%	20%	48%	48%	0%	0%
Fossil Fuel Electric Power	2,166	14,210	789	57%	59%	32%	26%	11%	10%	1%	5%
Dry Cleaning	2,360	3,813	66	56%	23%	3%	6%	41%	71%	0%	0%

Table 42: One-Year Inspection and Enforcement Summary by Statute for Selected Industries

Industry Sector	Facilities Inspected	Total Inspections	Total Enforcement Actions	Clean Air Act		Clean Water Act		RCRA		FIFRA/TSCA/ EPCRA/Other	
				% of Total Inspections	% of Total Actions	% of Total Inspections	% of Total Actions	% of Total Inspections	% of Total Actions	% of Total Inspections	% of Total Actions
Metal Mining	142	211	10	52%	0%	40%	40%	8%	30%	0%	30%
Coal Mining	362	765	22	56%	82%	40%	14%	4%	5%	0%	0%
Oil and Gas Extraction	874	1,173	34	82%	68%	10%	9%	9%	24%	0%	0%
Non-Metallic Mineral Mining	1,481	2,451	91	87%	89%	10%	9%	3%	2%	0%	0%
Textiles	172	295	12	66%	75%	17%	17%	17%	8%	0%	0%
Lumber and Wood	279	507	52	51%	30%	6%	5%	44%	25%	0%	40%
Furniture	254	459	11	66%	45%	2%	0%	32%	45%	0%	9%
Pulp and Paper	317	788	74	54%	73%	32%	19%	14%	7%	0%	1%
Printing	892	1,363	53	63%	77%	4%	0%	33%	23%	0%	0%
Inorganic Chemicals	200	548	31	35%	59%	26%	9%	39%	25%	0%	6%
Resins and Manmade Fibers	173	419	36	38%	51%	24%	38%	38%	5%	0%	5%
Pharmaceuticals	80	209	14	43%	71%	11%	14%	45%	14%	0%	0%
Organic Chemicals	259	837	56	40%	54%	13%	13%	47%	34%	0%	0%
Agricultural Chemicals	105	206	11	48%	55%	22%	0%	30%	36%	0%	9%
Petroleum Refining	132	565	132	49%	67%	17%	8%	34%	15%	0%	10%
Rubber and Plastic	466	791	41	55%	64%	10%	13%	35%	23%	0%	0%
Stone, Clay, Glass and Concrete	255	678	27	62%	63%	10%	7%	28%	30%	0%	0%
Iron and Steel	197	866	34	52%	47%	23%	29%	26%	24%	0%	0%
Metal Castings	234	433	26	60%	58%	10%	8%	30%	35%	0%	0%
Nonferrous Metals	108	310	28	44%	43%	15%	20%	41%	30%	0%	7%
Fabricated Metal	849	1,377	83	46%	41%	11%	2%	43%	57%	0%	0%
Electronics	420	780	43	44%	37%	14%	5%	43%	53%	0%	5%
Automobile Assembly	507	1,058	47	53%	47%	7%	6%	41%	47%	0%	0%
Shipbuilding and Repair	22	51	4	54%	0%	11%	50%	35%	50%	0%	0%
Ground Transportation	1,585	2,499	103	64%	46%	11%	10%	26%	44%	0%	1%
Water Transportation	84	141	11	38%	9%	24%	36%	38%	45%	0%	9%
Air Transportation	96	151	12	28%	33%	15%	42%	57%	25%	0%	0%
Fossil Fuel Electric Power	1,318	2,430	135	59%	73%	32%	21%	9%	5%	0%	0%
Dry Cleaning	1,234	1,436	16	69%	56%	1%	6%	30%	38%	0%	0%

one year (Table 42) to facilitate the identification of recent trends. Points of interest from the 5-year summary include:

- Compared to other sectors, the fossil fuel electric power generation sector has one of the higher percentages of CAA inspections (57%) and one of the lower percentages of RCRA inspections (11%), when measured against the total number of inspections conducted. As a result, it has one of the higher percentages of CAA enforcement actions (59%) and one of the lowest percentages of RCRA enforcement actions (10%), when measured against total enforcement actions.

The 1-year inspection and enforcement summary reflects similar numbers to those from the past 5 years. No notable exceptions are apparent.

VII.C Review of Major Legal Actions

Major Cases/Supplemental Environmental Projects

This section provides summary information about major cases that have affected this sector, and a list of Supplemental Environmental Projects (SEPs).

VII.C.1 Review of Major Cases

As shown in the previous tables, the number of enforcement actions taken over the past 5 years, when compared to the number of inspections conducted, is minimal. Even though there have been 871 total enforcement actions, major cases involving fossil fuel electric power generation facilities are rare. Since 1992, however, there have been at least 13 actions against such facilities.

The 13 cases were broken out as follows:

- 6 cases under the CAA (asbestos NESHAPs, NO_X monitoring violations, and SO_2 violations)
- 2 cases under the CWA (NPDES permit violation, wetlands)
- 2 cases under TSCA (PCBs)
- 2 cases under EPCRA (release in excess of reportable quantities)
- 1 multimedia case (CWA, EPCRA, and TSCA).

The average penalty associated with these cases was just more than $150,000. In addition, two SEPs were associated with the 13 cases. Those are discussed in more detail in the following section.

The two most significant cases against fossil fuel electric power generation facilities included CWA violations by Potomac Electric Power Company (PEPCO) and CAA violations by Public Service Electric & Gas (PSE&G). In the PEPCO case, the violations occurred from 1988 to 1993, during which time a site supervisor either pumped or oversaw the pumping of polluted water from holding ponds into an adjacent swamp. PEPCO discovered the illegal discharge and informed EPA. The consent decree provides for a penalty of $975,000. Because the violation was self-disclosed, no criminal charges were brought against the company or its officers.

In *United States v. Public Service Electric & Gas*, PSE&G was charged with violating the CAA, specifically the asbestos NESHAP. While commuting home from work, an off-duty EPA inspector noticed a pile of old pipes laying in a yard. A subsequent inspection of the old gas-cracking operation revealed the NESHAP violations. The PSE&G was required to pay a civil penalty of $230,000 and complete an extensive worker training and notification program.

VII.C.2 Supplementary Environmental Projects (SEPs)

SEPs are compliance agreements that reduce a facility's non-compliance penalty in return for an environmental project that exceeds the value of the reduction. Often, these projects fund pollution prevention activities that can reduce the future pollutant loadings of a facility. Information on SEP cases can be accessed via the internet at EPA's Enviroene website: http://es.inel.gov/sep.

As mentioned above, there were two SEPs at fossil fuel electric power generation facilities. The SEPs were negotiated with IES Utilities, Incorporated, of Cedar Rapids, Iowa, and Consumers Power Company of West Olive, Michigan.

The case against IES Utilities, Incorporated, was the first acid rain administrative penalty action in the country. The complaint alleged IES failed to complete timely certification testing of the acid rain continuous emission monitors required for SO_2, NO_X, CO_2, and volumetric flow at several of its generating stations. As part of the settlement, IES agreed to a SEP involving the purchase and permanent surrender by the utility to EPA of 589 SO_2 allowances. Each allowance constitutes an authorization to emit during or after a specified calendar year one ton of SO_2. The value of the allowances permanently removed from the market was $76,570 at the time of the settlement. IES was also required to pay a penalty of $25,630 to settle the claims.

In the Consumers Power Company case, the company agreed to carry out three SEPs at a total estimated cost of $247,742. The projects include (1) converting heat exchangers from ethylene glycol to propylene glycol, which is 300 times less toxic, (2) sending information on EPCRA requirements to an estimated 3,000 facilities in Michigan, and (3) conducting an outreach program on the EPCRA Section 302 notification requirement to rural communities. The company must also certify its compliance with EPCRA. In its complaint, EPA alleged that the company failed to notify authorities about an accidental release of 1,400 pounds of sodium hypochlorite.

VIII. COMPLIANCE ASSURANCE ACTIVITIES AND INITIATIVES

This section highlights the activities undertaken by this industry sector and public agencies to voluntarily improve the sector's environmental performance. These activities include those initiated independently by industrial trade associations. In this section, the notebook also contains a listing and description of national and regional trade associations.

VIII.A. Sector-related Environmental Programs and Activities

Clean Air Power Initiative

The goal of the Clean Air Power Initiative (CAPI) is to improve air pollution control efforts within the electric power generating industry by developing an integrated regulatory strategy for three major pollutants emitted by electric power generators: SO_2, NO_X, and air toxics (specifically, mercury). The project was initiated in 1995 by EPA's Assistant Administrator for Air and Radiation. Through the Initiative, EPA hopes to provide the electric power industry with greater regulatory flexibility and cost savings while achieving environmental goals for ozone, fine particles, regional haze, and toxics. The Initiative will use existing CAA authority where possible, although ultimately new congressional authority may be required. The EPA believes focusing on regional reductions of the pollutants and implementing a "cap and trade" approach for some pollutants, such as NO_X, SO_2, and mercury, would be most effective. The EPA is meeting with representatives of the power industry, State and local officials, environmental groups, and pollution control vendors to obtain their views and input for the regulatory framework for the Initiative. (Contact: Linda Reidt Critchfield, at (202) 233-9087. Website: http://www.epa.gov/capi).

EPA Regional Compliance And Enforcement Activities

The EPA Region VIII has focused on enforcement and compliance activities for coal-fired power plants. This industrial sector was targeted by Region VIII because they have 38 significant operating plants (i.e., generate greater than 25 MW electricity). The region has experienced ongoing compliance issues related to the new Acid Rain Program, impacts from plants in PSD Class I areas, and impacts in nonattainment areas. The goal of this EPA regional compliance and enforcement initiative is to comprehensively evaluate the compliance status of the facilities. The region is also evaluating any environmental justice issues due to the location of the facilities. States in Region VIII are participating in the sector initiative by performing annual air program and NPDES permit inspections on a yearly basis. South Dakota has conducted multimedia inspections at two coal-fired power plants.

Department of Energy Environmental Research Programs

The DOE maintains numerous laboratories and field facilities that perform research and development type activities. The following facilities are of interest to the fossil fuel electric power generation industry and environmental compliance:

- **Argonne National Laboratory:** The Argonne National Laboratory (ANL) conducts applied research and engineering development in energy and environmental technologies, high performance computing, and scientific research in physical and life sciences. The Energy Systems Division of ANL focuses its expertise on controlling environmental impacts of industrial energy use. The division is committed to a revitalized competitiveness in the national economy. (Website: http:\\www.anl.gov).

- **Oak Ridge National Laboratory:** The Oak Ridge National Laboratory performs research on a broad range of energy-related problems and provides technical information and assistance on energy research for State and local governments and the private sector. Areas of research include waste management, fossil, fuel power generation technology, nuclear power generation technologies, fusion technology, conservation, and environment. (Website: http:\\www.ornl.gov).

- **Federal Energy Technology Center:** The Federal Energy Technology Center (FETC), one of the government's principal fossil fuel energy research centers, is responsible for research and development programs in the technical and administration management of fossil energy. The FETC is part of the Bruceton Research Center, which is the Nation's largest governmental lab devoted to coal research and development. The center's program responsibilities include clean coal technology, coal preparation, combustion technology, alternative fuels utilization, flue gas cleanup, coal liquefaction, advanced research and technology development in direct utilization and liquefaction, and solids transport. (Website: http:\\www.fetc.doe.gov).

VIII.B EPA Voluntary Programs

Environmental Leadership Program

The Environmental Leadership Program (ELP) is a national initiative developed by EPA that focuses on improving environmental performance, encouraging voluntary compliance, and building working relationships with stakeholders. EPA initiated a one year pilot program in 1995 by selecting 12 projects at industrial facilities and federal installations that demonstrate the

principles of the ELP program. These principles include: environmental management systems, multimedia compliance assurance, third-party verification of compliance, public measures of accountability, pollution prevention, community involvement, and mentor programs. In return for participating, pilot participants received public recognition and were given a period of time to correct any violations discovered during these experimental projects. Four fossil fuel electric power generation facilities proposals were accepted and are listed in Table 43. Progress reports and fact sheets from these pilot programs are now available from EPA or off the web.

Table 43: List of Power Plants That Participated in the Environmental Leadership Program For 1995 and 1996
1. Arizona Public Service, Deer Valley Facility (Phoenix, AZ)
2. Duke Power Riverbend Steam Station (Mt. Holly, NC)
3. Ocean State Power (Burrillville, RI)
4. Salt River Project (Phoenix, AZ)

EPA is making plans to launch its full-scale Environmental Leadership Program in 1997. The full-scale program will be facility-based with a 6-year participation cycle. Facilities that meet certain requirements will be eligible to participate, such as having a community outreach/employee involvement programs and an environmental management system (EMS) in place for 2 years. (Contact: Debby Thomas, ELP Deputy Director, (202)564-5041. Website: http://es.inel.gov/elp).

Project XL

Project XL was initiated in March 1995 as a part of President Clinton's *Reinventing Environmental Regulation* initiative. The projects seek to achieve cost effective environmental benefits by providing participants regulatory flexibility on the condition that they produce greater environmental benefits. EPA and program participants will negotiate and sign a Final Project Agreement, detailing specific environmental objectives that the regulated entity shall satisfy. EPA will provide regulatory flexibility as an incentive for the participants' superior environmental performance. Participants are encouraged to seek stakeholder support from local governments, businesses, and environmental groups. EPA hopes to implement fifty pilot projects in four categories, including industrial facilities, communities, and government facilities regulated by EPA. Applications will be accepted on a rolling basis. For additional information

regarding XL projects, including application procedures and criteria, see the May 23, 1995 Federal Register Notice. (Contact: Fax-on-Demand Hotline 202-260-8590, or Christopher Knopes at EPA's Office of Policy, Planning and Evaluation (202)260-9298. Website: Web: http://www.epa.gov/ ProjectXL)

Climate Wise Recognition Program

The Climate Change Action Plan was initiated in response to the U.S. commitment to reduce greenhouse gas emissions in accordance with the Climate Change Convention of the 1990 Earth Summit. As part of the Climate Change Action Plan, the Climate Wise Recognition Program is a partnership initiative run jointly by EPA and DOE. The program is designed to reduce greenhouse gas emissions by encouraging reductions across all sectors of the economy, encouraging participation in the full range of Climate Change Action Plan initiatives, and fostering innovation. Program participants are required to identify and commit to actions that reduce greenhouse gas emissions. The program, in turn, gives organizations early recognition for their reduction commitments; provides technical assistance through consulting services, workshops, and guides; and provides access to the program's centralized information system. At EPA, the program is operated by the Air and Energy Policy Division within the Office of Policy Planning and Evaluation. (Contact: Pamela Herman, (202)260-4407. Website: http://www.oit.doe.gov/Access/climate).

Green Lights Program

EPA's Green Lights program was initiated in 1991 and has the goal of preventing pollution by encouraging U.S. institutions to use energy-efficient lighting technologies. The program saves money for businesses and organizations and creates a cleaner environment by reducing pollutants released into the atmosphere. The program has over 2,345 participants which include major corporations, small and medium sized businesses, federal, state and local governments, non-profit groups, schools, universities, and health care facilities. Each participant is required to survey their facilities and upgrade lighting wherever it is profitable. As of March 1997, participants had lowered their electric bills by $289 million annually. EPA provides technical assistance to the participants through a decision support software package, workshops and manuals, and an information hotline. EPA's Office of Air and Radiation is responsible for operating the Green Lights Program. (Contact: Green Light/Energy Star Hotline at 1-888-STARYES or Maria Tikoff Vargar, EPA Program Director, at (202)233-9178. Website: http://www.epa.gov/greenlights.html).

WasteWi$e Program

The WasteWi$e Program was started in 1994 by EPA's Office of Solid Waste and Emergency Response. The program is aimed at reducing municipal solid wastes by promoting waste prevention, recycling collection and the manufacturing and purchase of recycled products. As of 1997, the program had about 500 companies as members, one third of whom are Fortune 1000 corporations. Members agree to identify and implement actions to reduce their solid wastes setting waste reduction goals and providing EPA with yearly progress reports. To member companies, EPA, in turn, provides technical assistance, publications, networking opportunities, and national and regional recognition. (Contact: WasteWi$e Hotline at 1-800-372-9473 or Joanne Oxley, EPA Program Manager, (703)308-0199. Website: http://www.epa.gov /epaoswer/non-hw/reduce/wstewise/ index.html)

NICE [3]

The U.S. Department of Energy is administering a grant program called The National Industrial Competitiveness through Energy, Environment, and Economics (NICE[3]). By providing grants of up to 45 percent of the total project cost, the program encourages industry to reduce industrial waste at its source and become more energy-efficient and cost-competitive through waste minimization efforts. Grants are used by industry to design, test, and demonstrate new processes and/or equipment with the potential to reduce pollution and increase energy efficiency. The program is open to all industries; however, priority is given to proposals from participants in the forest products, chemicals, petroleum refining, steel, aluminum, metal casting and glass manufacturing sectors. (Contact: Chris Sifri, DOE, (303)275-4723 or Eric Hass, DOE, (303)275-4728. Website: http//www.oit.doe.gov/access/ nice3).

VIII.C Trade Association/Industry Sponsored Activity

Trade associations, in conjunction with their industry members, sponsor activities that serve to further regulatory compliance initiatives. This section describes a major environmental compliance assistance program being sponsored by the utilities in the fossil fuel electric power generation industry, as well as some of the major trade associations serving the fossil fuel electric power generation industry.

VIII.C.1 Environmental Programs

Climate Challenge Program

The Climate Challenge Program is a joint initiative of DOE and the electric utility industry to reduce greenhouse gas emissions. Electric utilities voluntarily commit to undertake actions to reduce, avoid, or sequester more than 47 million metric tons of carbon equivalent by the year 2000. These commitments are formalized in individual utility participation accords for large utilities, and letters of participation for utilities with less than 50,000 customers. Utilities report greenhouse gas emissions data and submit annual reports, which describe their achievements, to DOE. The Climate Challenge Options Workbook describe more than 50 options for utilities to implement to meet their participation commitments. The workbook was jointly developed by the electric power industry and DOE. (Contact: Larry Mansueti, Program Director, Office of Utility Technologies, EE-10, U.S. DOE, 1000 Independence Avenue SW, Washington, DC 20585. Website: http://bejing. dis.anl.gov/ ee-cgi-bin/ccap.pl)

The utility industry has also developed a set of initiatives to help utilities meet their commitments. These include:

- **EnviroTech Investment Fund**, which fund invests in companies focusing on regenerating energy technologies that are more energy efficient than those currently in use.
- **International Utility Efficiency Projects** that support energy development in a way that is environmentally beneficial.
- **Utility Forest Carbon Management Program**, which comprises domestic and international forestry projects to manage CO_2 emissions.

VIII.C.2 Summary of Trade Associations

Trade associations and professional organizations that serve the fossil fuel electric power generation industry are numerous and varied in their focus. They range from serving a relatively small portion of the industry (e.g., independent power producers) to serving the industry as a whole. This section briefly describes some major trade and professional organizations for this industry.

American Coal Ash Association (ACAA) 2760 Eisenhower Avenue, Suite 304 Alexandria, VA 22314 Phone: (703) 317-2400 Fax: (703) 317-2409 Website: http://www.acaa-usa.org	Members: 110 Staff: 5 Contact: Samuel S. Tyson

Founded in 1968, ACAA's mission is to advance the management and use of Coal Combustion Products (CCPs) in ways that are technically sound, commercially competitive, and environmentally safe.

American Public Power Association (APPA) 2301 M Street, NW Washington, DC 20037 Phone: (202) 467-2900 Fax: (202) 467-2910 Website: http://www.appa.org/	Members: 2,000 Staff: 60 Contact: Alan H. Richards

Founded in 1940, APPA's members include public utility systems, State- and county-owned electric systems, and rural cooperatives. The APPA maintains a library on the electric power industry and publishes a bimonthly magazine. The APPA also conducts research programs, compiles statistics, and offers utility education courses in electric power. The association holds an annual conference and workshops.

Association of Energy Engineers (AEE) 4025 Pleasantville Road., Suite 420 Atlanta, GA 30340 Phone: (770) 447-5083 Fax: (770) 446-3969 Website: http://www.aeecenter.org/	Members: 8,500 Staff: 9 Contact: Ruth M. Bennett

Founded in 1977, the members of the AEE are engineers, architects, and other professionals interested in energy management and cogeneration. The AEE promotes advancement of the profession and contributes to the professional development of its membership. The AEE provides scholarships for students in energy engineering, supports the National Energy Policy Council, and sponsors the Cogeneration and Competitive Power Institute, a research organization. The AEE publishes journals and newsletters and sponsors several technical and managerial congresses each year.

Edison Electric Institute (EEI) 701 Pennsylvania Avenue, NW Washington, DC 20004-2696 Phone: (202) 508-5000 Fax: (202) 508-5360 Website: http://www.eei.org/	Members: 202 Staff: 262 Contact: Thomas Kuhn, President

Founded in 1933, EEI members are investor-owned electric utility companies operating in the United States. Some affiliated members are from Canada, Mexico, and Central and South America. The EEI acts as a representative for the shareholder-owned electric power industry on subjects of public interest and provides a medium for the exchange of ideas and information within the electric power industry. The institute maintains a library and database and compiles statistics. The EEI provides educational programs and publishes surveys, which provide statistical and factual information about operation, rates, regulation, and environmental practices.

Electric Power Research Institute (EPRI) 3412 Hillview Road Palo Alto, CA 94303 Phone: (415) 855-2000 Fax: (415) 855-2041 Website: http://www.epri.com/	Members: 700 Staff: 500 Contact: Kurt Yeager, Exec. Officer

The EPRI was founded in 1972 and serves all sectors of the electric utility industry. The EPRI mission is to conduct a broad economically and environmentally acceptable program of research and development in technologies for electric power production, distribution, transmission, and utilization. The EPRI primary research areas are advanced power systems, coal combustion systems, electrical systems, energy analysis, and environment and energy management and utilization. The institute maintains a library and a database of current and completed research in the electric power industry. The institute also publishes a guide and a journal.

Electric Power Supply Association (EPSA) 1401 H Street NW, Suite 760 Washington, DC 20005 Phone: (202) 789-7200 Fax: (202) 789-7201	Members: 90 Staff: 12

The EPSA was formed by a merger of two former trade associations: the Electric Generating Association and the National Independent Energy Producers (NIEP). (The Electric Generation Association was formed by the merger of the Independent Power Producers Working Group and the

Cogeneration and Independent Power Coalition of America.) The EPSA mission is to advance the interests of its members: competitive generators, power marketers, and other suppliers. The EPSA advocates domestic and international policies that will result in a fully competitive electric power supply marketplace. The EPSA supports the development of a market in which existing commitments, such as independent power contracts, are honored and in which all customers have a choice of electric suppliers by a certain date.

National Rural Electric Cooperative Association (NRECA) 4301 Wilson Boulevard Arlington, VA 22203 Phone: (703) 907-5500 Fax: (703) 907-5521 Website: http://www.nreca.org/	Members: 1000 Staff: 600 Contact: Glenn English

The NRECA, founded in 1942, represents rural electric cooperatives, public power districts, and public utility districts in 46 States. The NRECA is an advocate for energy and operational issues, as well as rural electric development. The association maintains a library of 20,000 volumes, holds professional conferences, and publishes a magazine and newsletter. Other activities include legislative representation; energy, regulatory, and legal expertise; industry public relations; management institutes; training and energy research and development consulting services; insurance and safety programs; wage and salary surveys; and an international program.

North American Electric Reliability Council (NERC) Princeton Forrestal Village 116-390 Village Boulevard Princeton, NJ 08540-5731 Phone: (609) 452-9550 Fax:(609) 452-7669 Website: http://www.nerc.com/	Members: 9 Regional Councils Contact: Michehl R. Gent

The NERC is a nonprofit company owned by nine regional councils. The members of the regional councils and one affiliate are individual utilities representing all ownership categories of the electric utility industry, including investor-owned, municipal, rural electric cooperatives, Federal, independent power producers, power marketers, and power brokers. The principal purpose of NERC is to coordinate, promote, and communicate the reliability of North American electric utilities. The organization annually reviews the reliability and adequacy of the bulk electricity systems in North America and maintains several databases. In addition, the organization facilitates

development of reliability-related planning and operating criteria and standards, and publishes reports and reference documents.

Utility Air Regulatory Group (UARG) c\o Hunton & Williams 1900 K Street NW Washington, DC 20460 Phone: (202) 955-1500 Fax: (202) 778-2201	Members: 74

The UARG is a voluntary, nonprofit, unincorporated, ad hoc group of 74 electric utilities, the EEI, the NRECA, and the APPA. The UARG's purpose is to participate on behalf of its members collectively in Federal air pollution control regulatory activities and in related litigation.

Utility Solid Waste Activities Group (USWAG) c\o EEI 701 Pennsylvania Ave. NW Washington, DC 20004 Phone: (202) 508-5645 Fax: (202) 508-5150	Members: 83 Contact: Jim Roewer

The USWAG is an informal consortium of the EEI, the APPA, the NRECA and approximately 80 electric utility companies. Together, USWAG members represent more than 85 percent of the total electric generating capacity of the United States and service more than 95 percent of the Nation's consumers of electricity. The mission of USWAG is to help member companies manage all utility wastes and byproducts in a manner that is protective of human health and the environment and is of reasonable cost.

Utility Water Act Group (UWAG) c\o Hunton & Williams 1900 K Street NW Washington, DC 20460 Phone: (202) 955-1500 Fax: (202) 778-2201	Members: 78 Contact: John (Jack) F. Mackenzie, Chair Pacific Gas and Electric Co. Phone: (415) 973-6901 Fax: (415) 973-9201

The UWAG is an association of 75 individual utilities and three national trade associations of electric utilities--the EEI, the NRECA, and the APPA. The UWAG purpose is to participate on behalf of its members in EPA's rulemakings under the CWA and in litigation arising from those rulemakings.

IX. CONTACTS/ACKNOWLEDGMENTS/RESOURCE MATERIALS

For further information on selected topics within the fossil fuel electric power generation industry a list of contacts and publications are provided below.

Contacts

Name	Organization	Telephone	Subject
Rafael Sanchez	EPA/OECA/METD	(202) 564-7028	Compliance assistance
Chris Oh	EPA/OECA/METD	(202) 564-7004	Compliance assistance
Joe Daly	EPA/OST/EAD	(202) 260-7186	Steam Electric Effluent Guidelines

Acknowledgments

The contacts listed below have provided valuable background information and comments during the development of this document. EPA appreciates this support and acknowledges that the individuals listed do not necessarily endorse all statements made within this sector notebook.

Joseph Daly - EPA/Office of Water (EPA/OW)
Rafael Sanchez - EPA/Office of Enforcement and Compliance Assurance (EPA/OECA)
Bill Maxwell - EPA/Office of Air Quality Standards and Planning (EPA/OAQSP)
Samuel S. Tyson - American Coal Ash Association (ACAA)
Bill Wemhoff - American Public Power Association (APPA)
Kara M. Downey - Arizona Electric Power Cooperative, Inc.(AEPC)
Ruth M. Bennett - Association of Energy Engineers (AEE)
Alice Meyer - Edison Electric Institute (EEI)
Richard W. Sternberg - National Rural Electric Cooperative Association (NRECA)
Anthony Riai - EPA/Office of Enforcement and Compliance Assurance (EPA/OECA)

General Profile

1995 Capacity and Generation of Non-Utility Sources of Energy. Prepared by the Edison Electric Institute, Washington, D.C. November 1996.

Annual Energy Outlook 1997 - With Projections to 2015. U.S. Department of Energy, Energy Information Administration, Washington, D.C. December 1996. DOE/EIA-0383(97).

Directory of U.S. Cogeneration, Small Power, and Industrial Power Plants. Giles, Ellen, and Fred Yost. Twelfth Edition. Utility Data Institute, A Division of McGraw-Hill Company. June 1985. UDI-2018-95.

Electric Power Annual, 1995, Volume 1. U.S. Department of Energy, Energy Information Administration, Washington, D.C. July 1996. DOE/EIA-0348(95/1).

Electric Power Annual 1995, Volume II. U.S. Department of Energy, Energy Information Administration, Washington, D.C. December 1996. DOE/EIA-0348(95)/2.

Federal Technology Alert. U.S. Department of Energy, Washington, D.C. May 1997.

Financial Statistics of Major U.S. Publicly-Owned Electric Utilities - 1994. U.S. Department of Energy, Energy Information Administration, Washington, D.C. December 1995. DOE/EIA-0437/(94)/2.

Financial Statistics of Major U.S. Investor-Owned Electric Utilities - 1995. U.S. Department of Energy, Energy Information Administration, Washington, D.C. December 1996. DOE/EIA-0437/(95)/1.

Inventory of Power Plants in the United States, As of January 1, 1996. U.S. Department of Energy, Energy Information Administration, Washington, D.C. December 1996. DOE/EIA-0095(95).

The Changing Structure of the Electric Power Industry: An Update. U.S. Department of Energy, Energy Information Administration, Washington, D.C. December 1996. DOE/EIA-0562(96).

The Changing Structure of the Electric Power Industry, 1970-1991. U.S. Department of Energy, Energy Information Administration, Washington, D.C. March 1993. DOE/EIA-0562.

Process Descriptions and Chemical Use Profiles

Clean Power From Fossil Fuels. Energy and the Environment, the Linacre Lectures 1991-1992. Chester, Peter. Bryan Cartledge, ed. Oxford University Press, Oxford. 1993.

Development Document for Effluent Limitations Guidelines and Standards and Pretreatment Standards for the Steam Electric Point Source Category. U.S. Environmental Protection Agency, Office of Water, Washington, D.C. 1982. EPA 440/1-82/029.

EIA Guidelines for New Source Fossil Fueled Steam Electric Generating Stations. U.S. Environmental Protection Agency, Office of Federal Activities by SAIC, Falls Church. VA, 1994.

Electric Power Annual 1995. Energy Information Administration. U.S. DOE Office of Coal, Nuclear, Electric and Alternate Fuels, Washington, D.C. 1996.

Energy, Electric Power and Man. Healy, Timothy J. Boyd & Fraser Co. San Francisco, CA. 1974.

Standard Handbook of Power Plant Engineering. Elliot, Thomas C., ed. McGraw-Hill, Inc., New York, NY. 1989.

Steam and its Generation and Use, 40th edition. Stultz and Kitto, eds. Babcock & Wilcox, Barbeton, OH. 1992.

Study of Hazardous Air Pollutant Emissions from Electric Utility Steam Generating Units - Interim Final Report, Volume 1. U.S. Environmental Protection Agency, Office of Air Quality Planning & Standards, Research Triangle Park, N.C. 1996. EPA-453/R-96-013a.

Wastes from the Combustion of Coal by Electric Utility Power Plants. U.S. Environmental Protection Agency, Office of Solid Waste and Emergency Remediation, Washington, D.C. 1988. EPA 530-SW-88-002.

Regulatory Profile

Development Document For Effluent Limitations Guidelines and Standards and Pretreatment Standards for the Steam Electric Point Source Category. U.S. Environmental Protection Agency, Office of Water, Washington, D.C. November, 1982.

EIA Guidelines for New Source Fossil Fueled Steam Electric Generating Stations. U.S. Environmental Protection Agency, Office of Federal Activities by SAIC, Falls Church, VA, 1994.

Electricity Generation and Environmental Externalities: Case Studies. U.S. Department of Energy, Assistant Secretary for Fossil Energy, Washington, D.C.. September 1995. DOE/FE-0598

Standard Handbook of Power Plant Engineering. Elliot, Thomas C., ed. McGraw-Hill, Inc., New York, NY. 1989.

Steam and its Generation and Use, 40th edition. Stultz and Kitto, eds. Babcock & Wilcox, Barbeton, OH. 1992.

Pollution Prevention

Case Summaries of Waste Reduction by Industries in the Southeast. Gary Hunt, *et al.*, eds. North Carolina Department of Natural Resources and Community Development. July 1989.

Clean Coal Technology Demonstration Program, Program Update 1995. U.S. Department of Energy, Assistant Secretary for Fossil Energy, Washington, D.C. April 1996. DOE/FE-0346.

Coal Combustion Product Production and Use: 1966-1994, Report for Coal Burning Electric Utilities in the United States. American Coal Ash Association, Inc. Alexandria, VA. May 1996.

Enviro$ense, Fact Sheet: Pollution Prevention: Strategies for Fossil Fuel Electric Power Generation. Center for Hazardous Material Research (CHMR). Pittsburg, PA. Online, Available: http://es.inel.gov.com. Last updated January 9, 1996.

Enviro$ense, Cogeneration of Steam and Electric Power: Pollution Prevention Opportunities and Options, Report 49-1, September 1994, Prepared by: Commonwealth of Virginia Department of Environmental, Quality Office of Pollution Prevention. Richmond, VA. Online, Available: http://es.inel.gov.com, Last updated January 29, 1996.

Enviroene, Pollution Prevention Opportunities in Fossil Fuel Electric Power Generation. October 1990. Online, Available: http://es.inel.gov.techinfo/facts/epa/fosilful.html.

Fact Sheet: Eliminating Hexavalent Chromium from Cooling Towers. City of Los Angeles, Board of Public Works, Hazardous and Toxic Materials Office. Undated.

Fact Sheet: Water and Chemicals Reduction for Cooling Towers. North Carolina Department of Environmental Health and Natural Resources, Pollution Prevention Program. May 1987.

Industrial Pollution Prevention Handbook. Harry M. Freeman, ed. McGraw-Hill Inc. 1995.

Pollution Prevention/Environmental Impact Reduction Checklist for Coal-Fired Power Plants. U.S. Environmental Protection Agency, Office of Federal Activities, Washington, D.C. Undated. Online, Available: http://es.enel.gov./oeca/ofa/pollprev/coal.html.

Preamble to NPDES Storm Water Multi-sector General Permit for Industrial Activities (60 FR 50974, Friday, September 29, 1995).

Summary of Results from Programs Conducted by the Office Of Industrial Technologies. U.S. Department of Energy, Office of Energy Efficiency and Renewable Energy, Office of Industrial Technologies, Washington, D.C. October 1995.

U.S. Electric Utility Demand-Side Management 1994. Energy Information Administration. Office of Coal, Nuclear, Electric and Alternate Fuels. U.S. Department of Energy. Washington, D.C. December 1995. DOE/EIA-0589(94).

ENDNOTES

1. *Inventory of Power Plants in the United States, As of January 1, 1996.* U.S. Department of Energy, Energy Information Administration, Washington, D.C. December 1996. DOE/EIA-0095(95).

2. *1995 Capacity and Generation of Non-Utility Sources of Energy.* Prepared by the Edison Electric Institute, Washington, D.C. November 1996.

3. *Electric Power Annual 1995, Volume II.* U.S. Department of Energy, Energy Information Administration, Washington, D.C. December 1996. DOE/EIA-0384(95)/2.

4. *Inventory of Power Plants in the United States, As of January 1, 1996.* U.S. Department of Energy, Energy Information administration, Washington, D.C. December 1996. DOE/EIA-0095(95).

5. *1995 Capacity and Generation of Nonutility Sources of Energy.* Edison Electric Institute, Washington, D.C. November 1996.

6. *1995 Capacity and Generation of Nonutility Sources of Energy.* Edison Electric Institute, Washington, D.C. November 1996.

7. *1995 Capacity and Generation of Nonutility Sources of Energy.* Edison Electric Institute, Washington, D.C. November 1996.

8. *Electric Power Annual 1995, Volume II.* U.S. Department of Energy, Energy Information Administration, Washington, D.C. December 1996. DOE/EIA-0384(95)/2.

9. *The Changing Structure of the Electric Power Industry: An Update.* U.S. Department of Energy, Energy Information Administration, Washington, D.C. December 1996. DOE/EIA-0562(96).

10. *The Changing Structure of the Electric Power Industry: An Update.* U.S. Department of Energy, Energy Information Administration, Washington, D.C. December 1996. DOE/EIA-0562(96).

11. *Annual Energy Outlook 1997 - With Projections to 2015.* U.S. Department of Energy, Energy Information Administration, Washington, D.C. December 1996. DOE/EIA-0383(97).

12. *Annual Energy Outlook 1997 - With Projections to 2015.* U.S. Department of Energy, Energy Information Administration, Washington, D.C. December 1996. DOE/EIA-0383(97).

13. *Electric Power Annual 1995, Volume I.* U.S. Department of Energy, Energy Information Administration, Washington, D.C. July 1996. DOE/EIA-0348(95)/1.

14. *Energy, Electric Power and Man.* Healy, Timothy. J. Boyd & Fraser Co., San Francisco, CA. 1974.

15. *Standard Handbook of Power Plant Engineering.* Elliot, Thomas C. Ed. McGraw-Hill, Inc. New York, NY. 1989.

16. *Standard Handbook of Power Plant Engineering.* Elliot, Thomas C. Ed. McGraw-Hill, Inc. New York, NY. 1989.

17. *Standard Handbook of Power Plant Engineering.* Elliot, Thomas C. Ed. McGraw-Hill, Inc. New York, NY. 1989.

18. *Electric Power Annual 1995, Volumes I and II.* U.S. Department of Energy, Energy Information Administration. Washington, D.C. July and December 1996. DOE/EIA-0348(95)/1&2.

19. *Energy, Electric Power and Man.* Healy, Timothy. J. Boyd & Fraser Co., San Francisco, CA. 1974, and *Electric Power Annual 1995, Volumes I and II.* U.S. Department of Energy, Energy Information Administration. Washington, D.C. July and December 1996.

20. *Energy, Electric Power and Man.* Healy, Timothy. J. Boyd & Fraser Co., San Francisco, CA. 1974, and *Electric Power Annual 1995, Volumes I and II.* U.S. Department of Energy, Energy Information Administration. Washington, D.C. July and December 1996.

21. *Clean Power From Fossil Fuels.* Chester, Peter, and Bryan Carteledge, eds. Linacre Lectures 1991-1992. Oxford University Press, Oxford, 1974. DOE/EIA-0348(95)/1&2.

22. *Electric Power Annual 1995, Volumes I and II.* U.S. Department of Energy, Energy Information Administration. Washington, D.C. July and December 1996. DOE/EIA-0348(95)/1&2.

23. *Steam, Its Generation and Use, 40th Edition.* Stultz and Kitto, eds. Babcock & Wilcox, Barbeton, OH. 1992.

24. *Steam, Its Generation and Use, 40th Edition.* Stultz and Kitto, eds. Babcock & Wilcox, Barbeton, OH. 1992.

25. *Standard Handbook of Power Plant Engineering.* Elliot, Thomas C. Ed. McGraw-Hill, Inc. New York, NY. 1989.

26. *Steam, Its Generation and Use, 40th Edition.* Stultz and Kitto, eds. Babcock & Wilcox, Barbeton, OH. 1992.

27. *Electric Power Annual 1995, Volumes I and II.* U.S. Department of Energy, Energy Information Administration. Washington, D.C. July and December 1996. DOE/EIA-0348(95)/1&2.

28. *Electric Power Annual 1995, Volumes I and II.* U.S. Department of Energy, Energy Information Administration. Washington, D.C. July and December 1996. DOE/EIA-0348(95)/1&2.

29. *Electric Power Annual 1995, Volumes I and II.* U.S. Department of Energy, Energy Information Administration. Washington, D.C. July and December 1996. DOE/EIA-0348(95)/1&2.

30. *Steam, Its Generation and Use, 40th Edition.* Stultz and Kitto, eds. Babcock & Wilcox, Barbeton, OH. 1992.

31. *Steam, Its Generation and Use, 40th Edition.* Stultz and Kitto, eds. Babcock & Wilcox, Barbeton, OH. 1992

32. *Power Statistics Database* (1994 Data). Edison Electric Institute. Prepared by the Utility Data Institute, McGraw-Hill, Inc. Washington, D.C. 1995.

33. Personal communication with Joe Daly, EPA Office of Science and Technology, Engineering and Analysis Division. March 14, 1997.

34. *Electric Power Annual 1995, Volume II.* U.S. Department of Energy, Energy Information Administration, Washington, D.C. December 1996. DOE/EIA-0384(95)/2.

35. *Study of Hazardous Air Pollutant Emissions from Electric Utility Steam Generating Units -- Interim Final Report.* U.S. EPA Office of Air Quality Planning and Standards, Research Triangle Park, NC. October 1996. EPA-453/R-96-013a.

36. *Enviro$ense, Cogeneration of Steam and Electric Power: Pollution Prevention Opportunities and Options, Report 49-1.* Commonwealth of Virginia, Department of Environmental Quality Office of Pollution and Prevention. September 1994. Online, Available: http://es.enel.gov.com. Last updated January 29, 1996.

37. *Case Summaries of Waste Reduction by Industries in the Southeast.* Gary M. Hunt et. al., eds. North Carolina Department of Natural Resources and Community Development. July 1989.

38. *Summary of Results from Programs Conducted by the Office Of Industrial Technologies.* U.S. Department of Energy, Office of Energy Efficiency and Renewable Energy, Office of Industrial Technologies. October 1995.

39. *Federal Technology Alert.* U.S. Department of Energy, Washington, D.C. May 1997.

40. *Federal Technology Alert.* U.S. Department of Energy, Washington, D.C. May 1997.

41. *IndustrialPollution Prevention Handbook.* Freeman, Harry M. Ed. McGraw Hill Inc. 1995.

42. *Pollution Prevention/Environmental Impact Reduction Checklist for Coal-Fired Power Plants.* U.S. Environmental Protection Agency, Office of Federal Activities. Undated. Online, Available: pollprev/coal.html.

43. Personal Communication. Leonard Swann, Specialty Products Inc. Distributor for Armex Accustrip systems. March 7, 1997.

44. *Industrial Pollution Prevention Handbook.* Freeman, Harry M. Ed. McGraw Hill Inc. 1995.

45. "Boiler Chemical Cleaning Waste Can Make Money." *Electric Co-op Today.* May 2, 1997.

46. *Coal Combustion Product Production and Use: 1966-1994, Report for Coal Burning Electric Utilities in the United States.* American Coal Ash Association, Inc. Alexandria, VA. May 1996.

47. *U.S. Electric Utility Demand-Side Management 1994.* Office of Coal, Nuclear, Electric and Alternate Fuels. U.S. Department of Energy, Energy Information Administration. Washington, D.C. December 1995. DOE/EIA-0589(94).

APPENDIX A
INSTRUCTIONS FOR DOWNLOADING THIS NOTEBOOK

Electronic Access to this Notebook via the World Wide Web (WWW)

This Notebook is available on the Internet through the World Wide Web. The Enviroene Communications Network is a free, public, interagency-supported system operated by EPA's Office of Enforcement and Compliance Assurance and the Office of Research and Development. The Network allows regulators, the regulated community, technical experts, and the general public to share information regarding: pollution prevention and innovative technologies; environmental enforcement and compliance assistance; laws, executive orders, regulations, and policies; points of contact for services and equipment; and other related topics. The Network welcomes receipt of environmental messages, information, and data from any public or private person or organization.

ACCESS THROUGH THE ENVIROENE WORLD WIDE WEB

To access this Notebook through the Enviroene World Wide Web, set your World Wide Web Browser to the following address:

http://es.epa.gov/comply/sector/index.html

or use

www.epa.gov/oeca - then select the button labeled Industry and Gov't Sectors and select the appropriate sector from the menu. The Notebook will be listed.

Direct technical questions to the Feedback function at the bottom of the web page or to Shhonn Taylor at (202) 564-2502

[This page intentionally left blank.]