United States
Environmental Protection
Agency

Office of Water
4603

EPA 811-D-93-001
April 1993

EPA

SMALL WATER SYSTEM BYPRODUCTS TREATMENT AND DISPOSAL COST DOCUMENT

U.S. EPA Headquarters Library
Mail code 3201
1200 Pennsylvania Avenue NW
Washington DC 20460

#47254-94127

SMALL WATER SYSTEM BYPRODUCTS TREATMENT AND DISPOSAL COST DOCUMENT

Prepared for:

U.S. Environmental Protection Agency
Office of Ground Water and Drinking Water
Drinking Water Standards Division
401 M Street S.W.
Washington, D.C. 20460

Prepared by:

DPRA Incorporated
E-1500 First National Bank Building
332 Minnesota Street
St. Paul, Minnesota 55101

April 1993

Notice

This document has been reviewed in accordance with U.S. Environmental Protection Agency policy and approved for publication. Mention of trade names or commercial products does not constitute endorsement or recommendation for use.

TABLE OF CONTENTS

Page

1.0 INTRODUCTION 1

1.1 Background 1
1.2 Purpose and Scope 1
1.3 Water Treatment Processes 3
1.4 Byproducts Generated 7
1.5 Byproducts Management Options Overview 7

2.0 BYPRODUCT CHARACTERIZATION 9

2.1 Introduction 9
2.2 Chemical Coagulation and Filtration 9
2.3 Lime Softening 11
2.4 Ion Exchange 12
2.5 Reverse Osmosis 14
2.6 Byproduct Densities 15
2.7 References 15

3.0 COST ASSUMPTIONS 17

3.1 Introduction 17
3.2 Capital Cost Assumptions 17
3.3 Operation and Maintenance Assumptions 19
3.4 Total Annual Cost Assumptions 21
3.5 Cost Components Excluded 21
3.6 Cost Equations 22
3.7 Calculating Byproduct Management Costs 23

4.0 GRAVITY THICKENING 28

4.1 Technology Description 28
4.2 Technology Applicability and Limitations 29
4.3 Cost Components 29

4.3.1 Design Assumptions 29
4.3.2 Capital Components 30
4.3.3 Operation and Maintenance Components 31
4.3.4 Cost Components Excluded 31

4.4 Gravity Thickening Cost Equations 31

TABLE OF CONTENTS
(continued)

Page

5.0 CHEMICAL PRECIPITATION 34

5.1 Technology Description 34
5.2 Technology Applicability 35
5.3 Technology Limitations 35
5.4 Cost Components 36

5.4.1 Design Assumptions 36
5.4.2 Capital Components 36
5.4.3 Operation and Maintenance Components 37
5.4.4 Cost Components Excluded 38

5.5 Cost Equations 38

6.0 MECHANICAL DEWATERING 40

6.1 Technology Description 40
6.2 Technology Applicability 41
6.3 Technology Limitations 41
6.4 Cost Components 43

6.4.1 Design Assumptions 43
6.4.2 Capital Components 43
6.4.3 Operation and Maintenance Components 44
6.4.4 Cost Components Excluded 45

6.5 Cost Equations 45

7.0 NONMECHANICAL DEWATERING 47

7.1 Sand Drying Bed Description 47
7.2 Technology Applicability 48
7.3 Technology Limitations 48
7.4 Sand Drying Bed Cost Components 49

7.4.1 Design Assumptions 49
7.4.2 Capital Components 51
7.4.3 Operation and Maintenance Components 51
7.4.4 Cost Components Excluded 52

TABLE OF CONTENTS
(continued)

Page

7.5 Sand Drying Bed Cost Equations 52
7.6 Storage Lagoon Description 54
7.7 Technology Applicability 55
7.8 Technology Limitations 56
7.9 Storage Lagoons Cost Components 56

7.9.1 Design Assumptions 57
7.9.2 Capital Components 57
7.9.3 Operation and Maintenance Components 58
7.9.4 Cost Components Excluded 58

7.10 Lime Softening Storage Lagoon Cost Equations 59

8.0 EVAPORATION PONDS 61

8.1 Technology Description 61
8.2 Technology Applicability 62
8.3 Technology Limitations 62
8.4 Cost Components 63

8.4.1 Design Assumptions 63
8.4.2 Capital Components 64
8.4.3 Operation and Maintenance Components 65
8.4.4 Cost Components Excluded 65

8.5 Cost Equations 66

9.0 POTW DISCHARGE 68

9.1 Technology Description 68
9.2 Technology Applicability 69
9.3 Technology Limitations 69
9.4 Cost Components 70

9.4.1 Design Assumptions 70
9.4.2 Capital Components 71
9.4.3 Operation and Maintenance Components 72
9.4.4 Cost Components Excluded 72

9.5 Cost Equations 72

TABLE OF CONTENTS
(continued)

Page

9.5.1 500 Feet of Discharge Pipe 72
9.5.2 1,000 Feet of Discharge Pipe 73

10.0 DIRECT DISCHARGE 75

10.1 Technology Description 75
10.2 Technology Applicability 76
10.3 Technology Limitations 76
10.4 Cost Components 77

10.4.1 Design Assumptions 77
10.4.2 Capital Components 77
10.4.3 Operation and Maintenance Components 78
10.4.4 Cost Components Excluded 79

10.5 Cost Equations 79

10.5.1 500 Feet of Discharge Pipe 79
10.5.2 1000 Feet of Discharge Pipe 80
10.5.3 500 Feet of Discharge Pipe with a Holding Tank or Lagoon 81
10.5.4 1,000 Feet of Discharge Pipe with a Holding Tank or Lagoon 82

11.0 FRENCH DRAINS 84

11.1 Technology Description 84
11.2 Technology Applicability 84
11.3 Technology Limitations 85
11.4 Cost Components 85

11.4.1 Design Assumptions 85
11.4.2 Capital Components 85
11.4.3 Operation and Maintenance Components 86
11.4.4 Cost Components Excluded 86

11.5 Cost Equations 86

12.0 LAND APPLICATION 88

TABLE OF CONTENTS
(continued)

Page

12.1 Technology Description 88
12.2 Technology Applicability 89
12.3 Technology Limitations 90
12.4 Liquid Sludge Land Application Cost Components 91

12.4.1 Design Assumptions 91
12.4.2 Capital Components 92
12.4.3 Operation and Maintenance Components 92
12.4.4 Cost Components Excluded 93

12.5 Liquid Sludge Land Application Cost Equations 93

12.5.1 Sprinkler System 93
12.5.2 Trucking System 94

12.6 Dewatered Sludge Land Application Cost Components 95

12.6.1 Design Assumptions 95
12.6.2 Capital Components 95
12.6.3 Operation and Maintenance Components 96
12.6.4 Cost Components Excluded 96

12.7 Dewatered Sludge Land Application Cost Equations 96

13.0 NONHAZARDOUS WASTE LANDFILL 98

13.1 Technology Description 98
13.2 Technology Applicability and Limitations 98
13.3 Cost Components 100

13.3.1 Design Assumptions 100
13.3.2 Cost Components 100

13.4 Total Annual Cost Equation 101

14.0 HAZARDOUS WASTE LANDFILL 102

14.1 Technology Description 102
14.2 Technology Applicability and Limitations 103
14.3 Cost Components 104

TABLE OF CONTENTS
(continued)

Page

14.3.1 Design Assumptions 104
14.3.2 Cost Components 104
14.3.3 Cost Components Excluded 105

14.4 Total Annual Cost Equation 105

14.4.1 Hazardous Waste Disposal 105
14.4.2 Stabilization and Hazardous Waste Disposal 105

15.0 RADIOACTIVE WASTE DISPOSAL 106

15.1 Sources of Radioactivity in Drinking Water 106
15.2 Radium Removal 107
15.3 Low-Level Radioactive Waste Disposal 108
15.4 Cost Information 110

16.0 REFERENCES 110

LIST OF TABLES

Table 1 - Water System Categories 2
Table 2 - Chemical Coagulation Sludge Volumes 10
Table 3 - Lime Softening Sludge Volumes 12
Table 4 - Ion Exchange Brine Volume 13
Table 5 - Reverse Osmosis Brine Volumes 14
Table 6 - Capital Cost Factors and Selected Unit Costs 18
Table 7 - Operation and Maintenance Cost Factors and Unit Costs 20
Table 8 - Treatment System Sizing 24
Table 9 - Gravity Thickening 30
Table 10 - Chemical Precipitation 37
Table 11 - Pressure Filter Presses 44
Table 12 - Sand Drying Beds 51
Table 13 - Storage Lagoons - Lime Softening Sludge 58
Table 14 - Evaporation Ponds 65
Table 15 - POTW Discharge 71
Table 16 - Direct Discharge 78
Table 17 - Liquid Sludge Land Application 92

TABLE OF CONTENTS
(continued)

Page

LIST OF FIGURES

Figure 1 - Sludge/Slurry Producing Water Treatment Processes 4
Figure 2 - Brine Producing Water Treatment Processes 5
Figure 3 - Brine Treatment and Disposal Options 25
Figure 4 - Sludge/Slurry Treatment and Disposal Options 26

APPENDIX A - POTW Charges

1.0 INTRODUCTION

1.1 BACKGROUND

The Safe Drinking Water Act (SDWA) Amendments of 1986 require the United States Environmental Protection Agency (EPA) to list the best available technologies (BAT) capable of meeting maximum contaminant level regulations. BAT is developed to assist EPA in setting drinking water standards, particularly for taking into consideration the capabilities of various treatment technologies for removing contaminants from water, to assist water utilities in selecting appropriate treatment methods to meet the regulations, and to identify treatment technologies that are appropriate for small water treatment systems under Section 1415 of the SDWA.

The Office of Ground Water and Drinking Water (OGWDW) must assess the waste treatment and disposal practices likely to be used by the regulated community as part of its responsibilities to determine the costs of the National Primary Drinking Water Regulations. Special problems associated with small community water treatment byproducts management are addressed in this document. A separate document addresses the byproduct management methods for large water treatment systems.

1.2 PURPOSE AND SCOPE

The purpose of this document is to present methods to estimate water byproduct management costs applicable to small water systems. Small water systems include systems in Categories 1 through 4 identified in Table 1. These systems are designed for populations ranging from 25 to 3,300 people and have design flow rates ranging from 0.024 to 0.65 million gallons per day (MGD).

TABLE 1

WATER SYSTEM CATEGORIES

Category	Population Range	Median Population	Average Flow (MGD)	Design Flow (MGD)
1	25–100	57	0.0056	0.024
2	101–500	225	0.024	0.087
3	501–1,000	750	0.086	0.27
4	1,001–3,300	1,910	0.23	0.65
5	3,301–10,000	5,500	0.7	1.8
6	10,001–25,000	15,500	2.1	4.8
7	25,001–50,000	35,500	5	11
8	50,001–75,000	60,000	8.8	18
9	75,001–100,000	88,100	13	26
10	100,001–500,000	175,000	27	51
11	500,001–1,000,000	730,000	120	210
12	Greater than 1,000,000	1,550,000	270	430

Source: U.S. EPA, OGWDW.

This document contains technology descriptions and the estimated costs for the treatment and disposal of water treatment byproducts from small water systems. Selected waste treatment and disposal options are included in this document. These options are intended to provide a general overview of the costs associated with the treatment and disposal of water treatment plant byproducts. Cost equations in this document are for comparison purposes only. Site specific factors will cause individual cases to vary considerably from these estimates.

1.3 WATER TREATMENT PROCESSES

Four primary water treatment processes that produce byproducts are considered in this document: 1) coagulation and filtration, 2) lime softening, 3) ion exchange, and 4) reverse osmosis. Although this cost analysis focuses on byproducts from these four water treatment processes, the costs presented in this document are applicable to byproducts from other water treatment processes that produce similar residuals. The byproducts result from the material in the unprocessed water (i.e., suspended and dissolved materials) and/or from the chemicals used to remove this material. Coagulation and filtration and lime softening generate byproducts classified as sludges and slurries. Ion exchange and reverse osmosis generate byproducts classified as brines. Figures 1 and 2 present simplified flow diagrams for these four water treatment processes. A brief description of each of these water treatment technologies is presented below.

Coagulation and Filtration

Chemical coagulation and filtration, also referred to more generically as suspended solids removal, are processes used to remove a variety of substances including particulate matter that causes turbidity, microorganisms, color, disinfection byproduct precursors, and some inorganic contaminants. This type of treatment typically is used for surface water. The treatment process consists of three phases: 1) addition of a coagulant which is vigorously mixed throughout the water being treated, 2) light agitation of the water for a period of time to promote particle growth and agglomeration, and 3) settling and/or filtration of the flocculent. The resultant waste byproduct is a sludge or slurry.

Figure 1

SLUDGE/SLURRY PRODUCING WATER TREATMENT PROCESSES

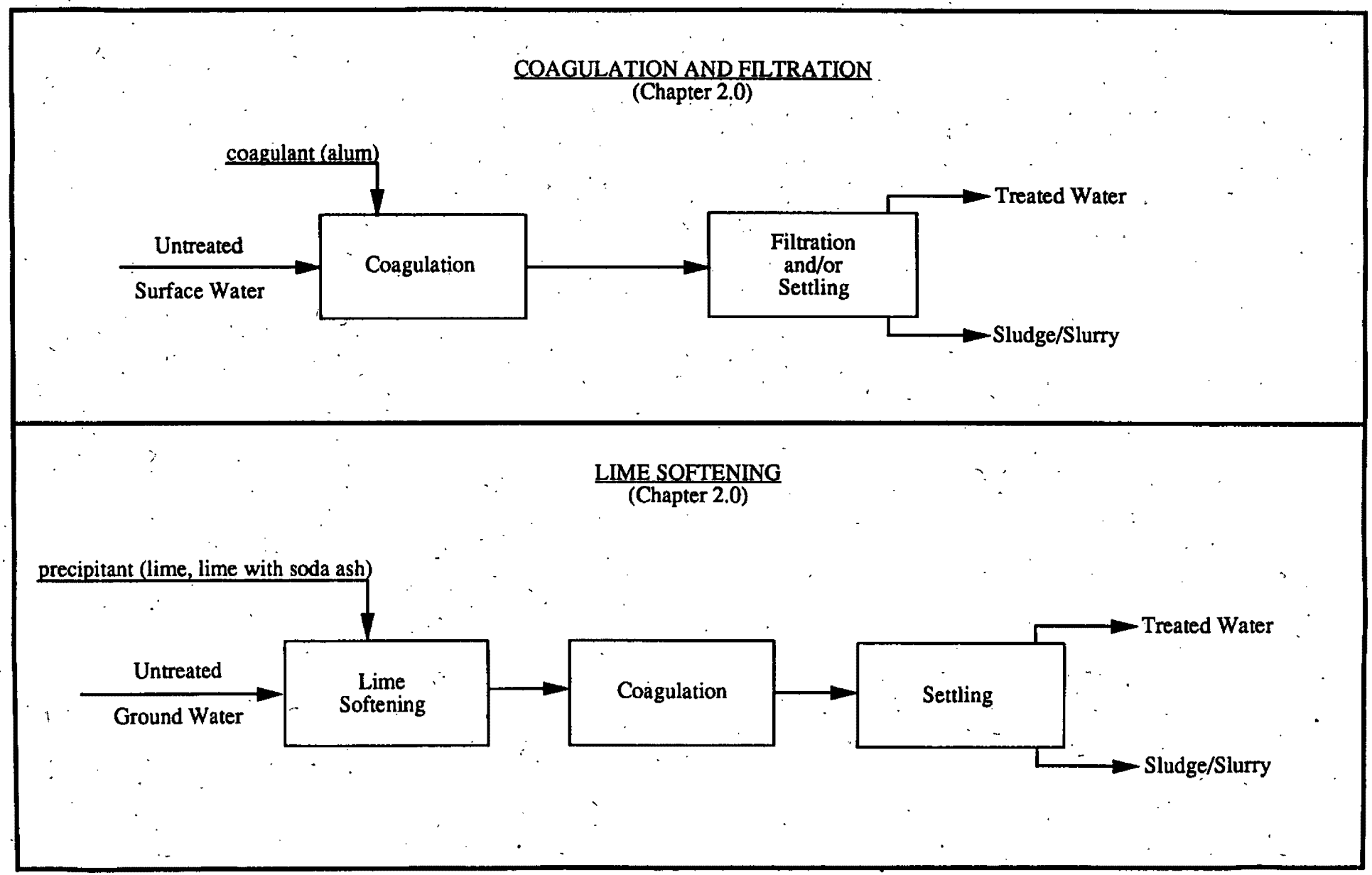

Figure 2

BRINE PRODUCING WATER TREATMENT PROCESSES

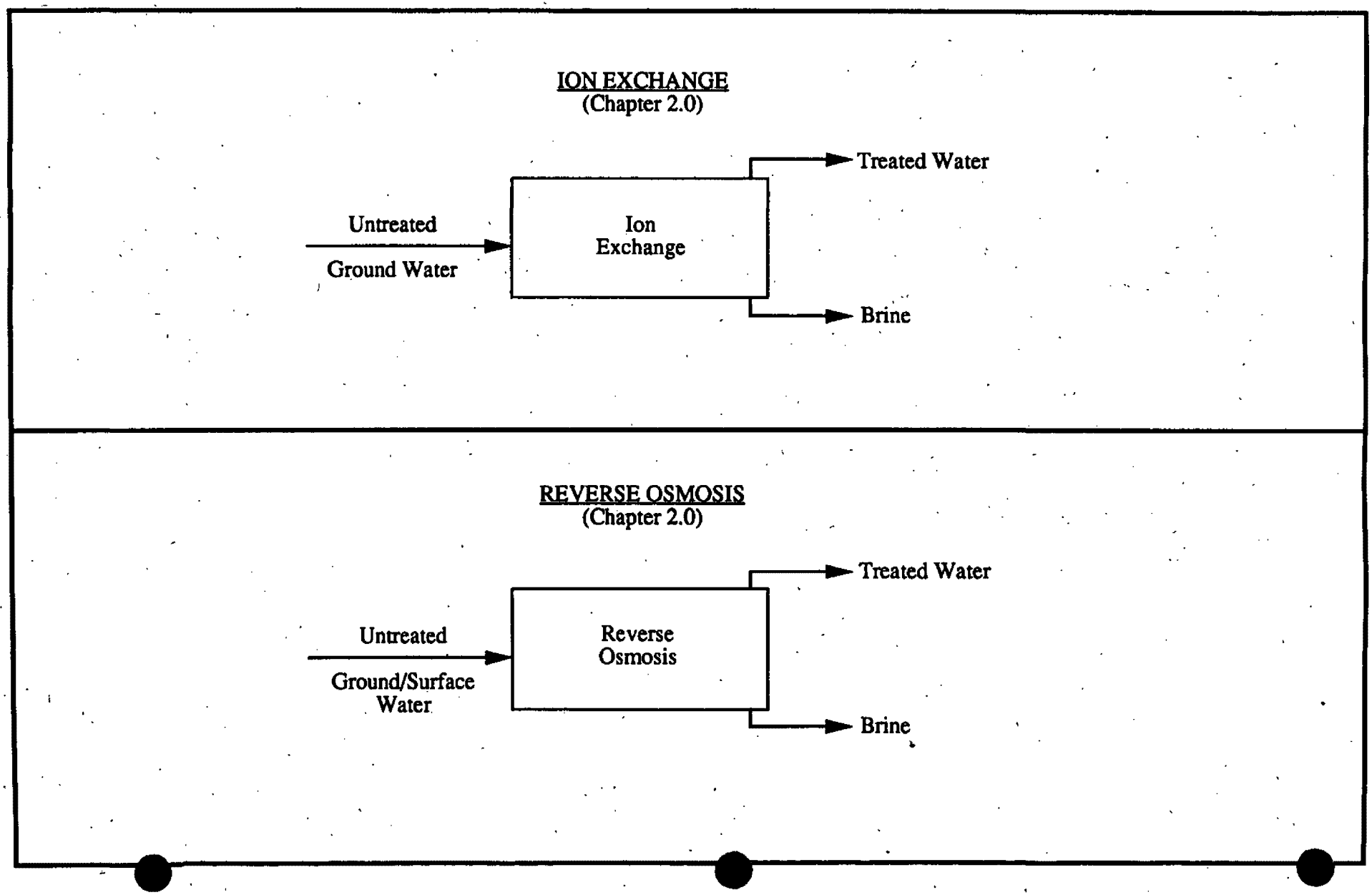

Lime Softening

Lime softening, also referred to as precipitative softening, can remove a wide range of contaminants including turbidity, microorganisms, calcium, magnesium, barium, radium, cadmium, lead, zinc, chromium III, and arsenic V. Precipitation of these contaminants is performed by the addition of lime or lime with soda ash. Lime softening is often followed by a coagulation and sedimentation stage to improve removal of the particulate matter. This treatment typically is used for ground water; however, in some regions of the country, river water also may require softening. The resultant waste byproduct is a sludge or slurry consisting of a high pH calcium hydroxide flocculent.

Ion Exchange

Historically, ion exchange was used to remove hardness-causing cations, such as calcium and magnesium; however, currently it also is used to remove radium, barium, iron, manganese, cadmium, lead, chromium III and VI, nitrates, uranium, selenium, and arsenic V. This treatment typically works best on ground waters, since surface waters frequently require pretreatment to remove turbidity. Ion exchange is a separation process in which dissolved ions undergo a phase transfer from a solution to a solid-surface phase. The resultant waste byproduct is a brine.

Reverse Osmosis

Reverse osmosis is used to treat water to remove a wide variety of contaminants including ions in brackish water, ions that cause hardness, uranium, radium, and most inorganics regulated under the SDWA. Reverse osmosis is not used to remove mercury or arsenic III. It is a membrane-separation technique in which a semipermeable membrane allows water to permeate through it while acting as a barrier to the passage of dissolved, colloidal, and particulate matter. The resultant waste byproduct is a brine.

1.4 BYPRODUCTS GENERATED

The byproducts generated are classified as either sludges and slurries or brines. The sludges and slurries are water-solid mixtures where the solids or particulates comprise at least 0.5 percent of the mixture and the solids are suspended rather than dissolved. Brines are solutions with a dissolved salt concentration rather than an undissolved phase as with sludges and slurries. Backwash water, whose composition depends on the water treatment technology employed, is assumed to be routed into the byproducts stream. In general, the backwash stream has a composition similar enough to the primary byproduct for this to be practical. The backwash volume is included in the volumes considered for byproducts treatment/disposal.

1.5 BYPRODUCTS MANAGEMENT OPTIONS OVERVIEW

There are several management methods for water treatment byproducts. The management method selected depends upon the water treatment practices and the byproduct characteristics. Management methods should be thoroughly evaluated to minimize the possibility of generating hazardous or low-level radioactive residuals. Hazardous and low-level radioactive wastes must be managed in accordance with existing regulations. Methods for management of the byproducts produced from small system water treatment facilities include the following options:

- Chemical Precipitation;
- Mechanical Dewatering;
- Nonmechanical Dewatering;
- Evaporation Ponds;
- POTW Discharge;
- Direct Discharge;
- French Drain;
- Land Application;
- Nonhazardous Waste Landfill;
- Hazardous Waste Landfill; and
- Radioactive Waste Disposal.

Management options applicable to sludges and slurries include 1) mechanical dewatering, 2) nonmechanical dewatering, 3) land application, 4) hazardous waste landfill, and 5) nonhazardous waste landfill. Management options applicable to brines include 1) POTW discharge, 2) chemical precipitation, 3) french drain, 4) direct discharge, and 5) evaporation ponds.

Radioactive wastes should be managed in accordance with EPA's guidance entitled "Suggested Guidelines for the Disposal of Drinking Water Wastes Containing Naturally Occurring Radionuclides." The guidelines were originally issued in 1990 and will be revised when the Agency issues regulations relating to radionuclides.

2.0 BYPRODUCT CHARACTERIZATION

2.1 INTRODUCTION

Water byproducts, or the waste streams generated during the treatment of water to obtain drinking water, consist of sludges, slurries, and brines. For this study, these byproducts are assumed to be generated from four water treatment technologies: chemical coagulation and filtration, lime softening, ion exchange, and reverse osmosis. Although this cost analysis focuses on byproduct volumes and characteristics generated by these four technologies, the costs presented in this document are applicable to byproducts from other water treatment processes that produce similar residuals.

In general, the volume of byproducts generated is dependent on the quality of feed water, the efficiency of the treatment system, the water usage rate, the amount of chemicals used, and the water treatment technology employed. The volume also can vary seasonally or monthly; variations are not unusual for different months of the year. To estimate the byproducts generated on a national basis, assumptions regarding these parameters are made and described in the following paragraphs which address each water treatment technology.

2.2 CHEMICAL COAGULATION AND FILTRATION

Chemical coagulation and filtration is frequently applied to surface waters to remove organic matter and to pretreat hard-to-remove substances such as taste and odor compounds and color. The most common chemical coagulant used is alum.

Based on actual facility data, alum sludge generation quantities range from 0.001 to 0.37 percent of the treated water flow rate with an average of 0.11 percent (Ref. 1). The alum sludge volumes for the range of flow categories for small systems are summarized in Table 2. The solids concentration of this sludge ranges from 0.5 to 3 percent.

TABLE 2

CHEMICAL COAGULATION SLUDGE VOLUMES

Water Treatment Plant Flow (gal/day)	Typical Volume Ranges (gal/day)	Typcial Volumes (gal/day)
5,600	0.06–21	10
24,000	0.25–90	30
87,000	1–300	100
270,000	3–1,000	300
650,000	7–2,400	700

From this analysis, the volume of chemical coagulation sludge generated ranges from 0.06 to 2,400 gallons of sludge per day depending on the water treatment plant flow rate.

To estimate the amount of sludge produced in an alum coagulation plant for the removal of turbidity, based on specific feed water characteristics, the following equation can be used (Ref 2).

$$S = 8.34\,Q\,(0.44\,Al + SS + A)$$

Where:
- S = sludge produced in pounds per day
- Q = plant flow in million gallons per day
- Al = Alum dose in milligrams per liter
- SS = raw water suspended solids in milligrams per liter
- A = additional chemicals added such as polymer, clay, or activated carbon in milligrams per liter

Since most water treatment plants do not routinely measure suspended solids, turbidity is often used to estimate suspended solids. The relationship between turbidity and suspended solids can be represented by the following equation:

$$SS = b\,Tu$$

Where: SS = raw water suspended solids in milligrams per liter
b = factor determined based on characteristics of raw water, typically 0.7 to 2.2
Tu = turbidity

This correlation should be determined for a specific water treatment plant over a period of time since turbidity can vary seasonally for the same water supply.

The filter backwash volume from chemical coagulation and filtration depends upon the number of filters and frequency and duration of each backwash event. The volume generated ranges from 0.5 to 5 percent of the treated water. In general, small treatment plants will generate a higher percentage of filter backwash than large treatment plants because they tend to operate less efficiently.

2.3 LIME SOFTENING

Lime softening is the precipitation of calcium, magnesium, and other cations from water using lime and soda ash. Calcium and magnesium are the primary ions which contribute to water hardness. For the purposes of this document, it is assumed that lime softening is used specifically to remove calcium carbonate and magnesium bicarbonate hardness. It is also assumed that lime softening is performed only on ground water; however, in some regions of the country, river water also may require softening.

The quantity of lime softening sludge ranges from 0.4 to 1.5 percent of the treated water flow rate, with an average of 1.2 percent. The lime sludge volumes for the range of flow categories for small systems are summarized in Table 3. The initial solids concentration of this sludge ranges from 2.4 to greater than 25 percent with the majority of facilities having a solids concentration of 2.4 percent.

TABLE 3

LIME SOFTENING SLUDGE VOLUMES

Water Treatment Plant Flow (gal/day)	Typical Volume Ranges (gal/day)	Typical Volumes (gal/day)
5,600	20–90	70
24,000	100–400	300
87,000	350–1,300	1,100
270,000	1,100–4,100	3,300
650,000	2,600–9,900	7,900

The volume of sludge generated from lime treatment facilities ranges from 20 to 9,900 gallons per day depending on the water treatment plant flow rate.

The filter backwash volume from lime softening depends on the number of filters and frequency and duration of each backwash event. The volume generated ranges from 0.5 to 5 percent of the treated water. In general, small treatment plants will generate a higher percentage of filter backwash than large treatment plants because they tend to operate less efficiently.

2.4 ION EXCHANGE

Ion exchange processes are used to soften water and remove impurities. Ion exchange systems can be used to remove cations (e.g., calcium and magnesium) or anions (e.g., chloride). Brines are produced from rinsing, regenerating, and backwashing the ion exchange unit. Of these three byproducts streams, the regeneration stream contains the highest levels of total dissolved solids (TDS) ranging from 10 to 300 times the levels found in the feed water. The range of the average TDS from ion exchange brines is 15,000 to 35,000 milligrams per liter (mg/l) (Ref. 2). This high TDS content is the result of the salts removed from the exchange

resin during regeneration as well as excess regeneration salts. By mixing the regeneration stream with the rinse and backwash streams, dilution by approximately an order of magnitude can be achieved.

The byproduct quantities (brines) from ion exchange range from 1.5 to 10 percent of the treated water depending on the hardness of the feed water and the type of ion exchange unit used. In general, for every kilogram of hardness removed, approximately 3 to 15 gallons of brine are produced (Ref. 2) Operating data from six operating ion exchange water treatment plants indicate that the volume of brine generated ranges from 17 to 83 gallons per 1000 gallons of water processed (Ref.2). Brine volumes are calculated assuming that these brine generation rates are applicable to small treatment systems; the low end of this range is used as the typical volume of brine generated. The resultant brine generation rates are provided in Table 4.

TABLE 4

ION EXCHANGE BRINE VOLUME

Water Treatment Plant Flow (gal/day)	Typical Volume Range (gal/day)	Typical Volumes (gal/day)
5,600	100–500	100
24,000	400–2,200	400
87,000	1,500–7,900	1,500
270,000	4,700–24,400	4,700
650,000	11,200–58,800	11,200

The volume of brine produced from small ion exchange facilities ranges from approximately 100 to 58,800 gallons per day depending on the water treatment plant flow rate, the quality of the untreated water, and the type of ion exchange system used.

2.5 REVERSE OSMOSIS

Reverse osmosis processes use a semi-permeable membrane that allows water to pass through it while restricting the passage of dissolved, colloidal, and particulate matter. The byproducts stream contains the salts and other materials rejected by the membrane. The byproduct stream has a high TDS concentration. Concentrations of specific contaminants in the byproducts stream may range from 2 to 9 times the concentration in the feed water (Ref.3). For the small facility sizes being considered in this analysis, the volume of reject water or brines produced from backwashing the membrane are typically 25 to 50 percent of the feed flow with TDS concentrations 3 to 4 times higher than the concentration of the feed water (Ref.3). The percentage of reject water produced decreases as the size of the water systems increase due to increased efficiencies. For the purposes of estimating brine generation from reverse osmosis water treatment plants, the volume of reject water is assumed to range from 25 to 50 percent of the feed water. The brine volumes are presented in Table 5.

TABLE 5

REVERSE OSMOSIS BRINE VOLUMES

Water Treatment Plant Flow (gal/day)	Typical Volume Range (gal/day)	Typical Volume (gal/day)
5,600	1,900–5,600	5,600
24,000	8,000–24,000	24,000
87,000	29,000–87,000	46,850
270,000	90,000–270,000	90,000
650,000	216,700–650,000	216,700

The volume of brine produced from a reverse osmosis facility ranges from 1,900 to 650,000 gallons per day depending on the water treatment plant flow rate, the initial water quality, and the efficiency of the membrane.

2.6 BYPRODUCT DENSITIES

The densities of the byproduct streams from the water treatment technologies considered in this analysis are, in general, dependent on the solids concentration. In general, the brines resulting from reverse osmosis and ion exchange, although high in total dissolved solids, have a solids concentration of less than one percent. Therefore, the brine density is assumed to be that of water or 62.43 pounds per cubic feet (lb/ft^3).

The density of the sludges generated from lime softening and chemical coagulation are more variable and are dependent primarily on the solids concentration or moisture content. The sludge density is assumed to range from 64 to 74 lb/ft^3 (Ref.4). If the solids content of a specific byproducts stream is known, the sludge density can be calculated from the following equation (Ref.3):

$$\text{Density} = \frac{100}{\dfrac{\text{percent solids}}{\text{density solids}} + \dfrac{\text{100-percent solids}}{\text{density water}}}$$

This equation is applicable for sludge with a solids concentration of less than 50 percent. A typical value for the density of the solids in an alum or iron sludge is 145 lb/ft^3 (Ref.3). Dewatered sludge densities also can be calculated using the equation provided as long as the solids concentration remains below 50 percent. A typical density of a dewatered sludge is assumed to be 100 lb/ft^3 (Ref.3).

2.7 REFERENCES

1. Robertson, R.F. and Y.T. Lin. "Filter Washwater and Alum Sludge Disposal: A Case Study." Proceedings AWWA Seminar on Water Treatment Waste Disposal Seminar, (June 25, 1978), 4, 1-8.

2. American Water Works Association. Handbook: Water Treatment Plant Waste Management. 1987

3. American Water Works Association. Slib, Schlamm, Sludge. KIWA Ltd., 1990.

4. American Water Works Association. Sludge: Handling and Disposal. Denver, CO: American Water Works Association, 1989.

3.0 COST ASSUMPTIONS

3.1 INTRODUCTION

The costs included in this document are based on a variety of sources including computer cost models, published cost information, and vendor quotes. All costs presented in this document are in 1992 dollars. The cost equations presented in this cost document should be used for relative comparisons and broad base estimation purposes only. Individual project costs have been found to be very different from those presented herein. This is primarily due to site-specific factors such as physical and chemical characteristics of the residuals, site constraints, operational costs and differing state and local regulatory requirements. More accurate site specific cost estimates should be developed for facility planning and budgeting purposes.

3.2 CAPITAL COST ASSUMPTIONS

Table 6 presents cost factors and unit costs used to calculate the capital costs presented in this document. The land, buildings, and piping components are discussed in detail below. Other capital cost items (e.g., tanks, lagoons, pumps) were calculated individually.

Land

Land prices vary substantially across the country. Land prices depend on the proximity to metropolitan areas, state of land development (i.e., improved or unimproved), current use, and scarcity of land. A cost of $1,000 per acre is assumed for small water systems. This land cost represents an average cost for rural, unimproved land. Costs for unimproved rural land vary from approximately $150 per acre in states with large tracts of undeveloped land to $2,200 per acre in states with small tracts of undeveloped land. Costs for suburban or industrial unimproved land averages $10,000 per acre and ranges from approximately $4,000 per acre to $350,000 per acre depending on location.

TABLE 6

CAPITAL COST FACTORS AND SELECTED UNIT COSTS

Component	Factor/Unit Cost
Land	$1,000/Acre
Buildings	$33.00/Ft^2
Piping	5% of Installed Equipment*
Pipe Fittings	20% of Piping Costs†
Electrical	1% of Installed Equipment
Instrumentation	1-2% of Installed Equipment
Engineering Fee	15% of Direct Capital
Contractor's Overhead and Profit	12% of Direct Capital

* Piping costs are calculated directly when piping is a significant cost (e.g., for direct discharge).

† Factor is used when piping costs are calculated directly

Costs for purchasing land are included in the capital cost equation for all treatment and disposal processes that use surface impoundments and for french drains. For example, an impoundment is used for storage prior to land application. The land costs are presented as a separate cost in the capital cost equation to allow the user to delete the cost for land if no purchase is required or to vary the cost of the land if the unit cost of land for a given area is available. When the above criteria are met, a minimum land purchase of ½ acre is used in developing land costs.

Land costs are not included for direct discharge and POTW discharge. It is assumed that the water treatment authority is able to obtain an easement for placement of a sewer or discharge line.

Buildings

Similar to land costs, building costs vary substantially based on geographic location. The building cost of $33.00 per square foot, listed in Table 6, is taken from 1992 Means Building Construction Cost Data. This cost is for a basic warehouse or storage building and includes electrical, foundations, heating, ventilation, air conditioning, and plumbing. It includes a 10 percent surcharge for structures of less than 25,000 square feet. This cost is the median cost

for basic warehouse and storage buildings. The lower quartile cost is $21.30 per square foot and the upper quartile cost is $45.65 per square foot. Different warehouse or building configurations will change this unit cost.

Costs for constructing buildings are included in the capital cost equation for equipment intensive byproduct treatment technologies. For example, building costs are included in the capital cost for chemical precipitation and mechanical dewatering. The building costs are presented as a separate cost in the capital cost equation to allow the user to delete the cost for land if construction of a building or addition to an existing building is unnecessary.

Piping and Pipe Fittings

Piping costs are calculated in two separate manners depending on the magnitude of the piping costs. For management systems in which the piping constitutes a significant portion of the capital cost (e.g., direct discharge and POTW discharge), piping costs were calculated by sizing individual pipe lengths and determining installation charges. For these management systems, pipe fittings are assumed to be 20 percent of the installed piping costs. For management systems where piping is not a significant cost (e.g., chemical precipitation and mechanical dewatering), piping and pipe fittings are assumed to be 5 percent of the installed equipment costs.

3.3 OPERATION AND MAINTENANCE ASSUMPTIONS

Table 7 presents cost factors and unit costs used to calculate the operation and maintenance costs presented in this document. The labor rate is discussed below.

TABLE 7

OPERATION AND MAINTENANCE COST FACTORS AND UNIT COSTS

Component	Factor/Unit Cost
Labor	$14.50/Hour
Insurance and General and Administrative Expenses	2% of Direct Capital, Excluding Land and Buildings
Maintenance	2-3% of Direct Capital, Excluding Land and Buildings
Electricity	$0.086/Kilowatt-Hour

Labor

The labor rate is based on a 10-region average for nonunion scale laborers. The hourly rate of $14.50 is based on an average salary of $8.65 per hour with a 12.2 percent fringe benefit and a 50 percent labor overhead cost. Average salaries by region range from $7.25 per hour in the south central to $10.17 in the western United States. Fringe rates range from approximately 8 to 15 percent depending on the region of the country.

Insurance and General and Administrative Expenses

A factor of two percent of the direct capital cost excluding land and buildings is used to estimate insurance and general and administrative expenses. This cost is not included for POTW discharge, direct discharge, french drain, and lagoon-based technologies.

Maintenance

A factor of two to three percent of the direct capital cost excluding land and buildings is used to estimate maintenance expenses. It is assumed that no maintenance is required over the 20-year operating life for POTW discharge, direct discharge, and french drain systems.

3.4 TOTAL ANNUAL COST ASSUMPTIONS

Total annual costs are equal to the sum of the operation and maintenance costs plus the annualized capital costs. Annualized capital costs are calculated based on a 20-year operating life and an interest rate of 10 percent. The capital recovery factor for a 20-year operating life and 10 percent interest rate is 0.1175. Alternate capital recovery factors can be calculated using the formula presented below.

$$\text{Capital Recovery Factor} = \frac{(1 + i)^N (i)}{(1 + i)^N - 1}$$

Where: i = interest rate
N = number of years

3.5 COST COMPONENTS EXCLUDED

The following cost components are not included in the cost estimates presented in this document. Other excluded costs, specific to each management option, are highlighted under their respective technology cost sections.

Sample Collection and Laboratory Analysis

Costs for sample collection and analysis to determine solids content, free liquids, toxicity characteristics, and other parameters are not included in the costs presented in this document. Sampling frequency is highly variable. Depending on the byproducts management method selected, sampling requirements can be minimal or extensive.

Permits and Other Regulatory Requirements

Costs for permits and other regulatory requirements are not included in this analysis. Requirements vary from state to state for a given management option. Permitting costs will vary based on the size and complexity of a unit and the local governing jurisdiction.

Management methods that may require permits include french drains, direct discharge, land application, evaporation ponds, and storage lagoons. In addition, generators of hazardous waste are required to comply with RCRA generator requirements (40 CFR Part 262).

Mechanical Backup

Costs for equipment backup, or redundancy, are not included in these cost estimates.

3.6 COST EQUATIONS

The cost equations for the capital components and for operation and maintenance were developed by estimating the costs for different byproduct flow rates. Equipment sizes and retention times were selected based on published literature, vendor contacts, and best engineering judgement. Capacities for major equipment components are presented in each cost chapter. Each cost equation encompasses the range of expected byproduct flow rates unless a specific technology is not applicable to the entire range. For example, French drains are typically used for flow rates of less than 10,000 gallons per day. The cost equations only include brine flow rates of less than 10,000 gallons per day even though the highest flow rate expected is two orders of magnitude higher than 10,000 gallons per day.

The limits of the cost equations presented for each byproduct management method may be extended somewhat beyond the limits presented in this document. The upper or lower end for some equations, however, may represent the largest or smallest practical units. Therefore, the technology limitations and design assumptions should be carefully reviewed prior to extending the limit of the equations. Best engineering judgement should be used when extending the equations beyond their specified ranges.

The capital and operation and maintenance equations encompass the water byproduct volumes generated by both the design flow rates and the average operating flow rates for Category 1–4 water treatment plants. The user may want to size the equipment (i.e., determine the capital

cost) for the byproducts produced from the water treatment system design flow rate, while calculating the operating cost using the average byproduct flow rate. Thus the equipment is sized for peak flow periods, but the actual operating costs may be more closely estimated. Typically, the design flow rate for the water treatment system may be two to three times the average operating flow rate for the water treatment facility. When calculating the costs for capital intensive management technologies such as chemical precipitation and mechanical dewatering, the user may want to calculate both the capital and operation and maintenance costs using the average operating flow rate. Table 8 indicates whether the water treatment design flow rate or average flow rate should be used to calculate the capital and operation and maintenance costs. The user of this document may always use the design flow rate to calculate costs, but this may result in substantial over estimation of the cost to treat water byproducts generated by an actual facility.

3.7 CALCULATING BYPRODUCT MANAGEMENT COSTS

Byproduct management costs are calculated using the cost equations presented in the following chapters. Known byproduct flow rates from an operating facility may be used or approximate byproduct volumes can be estimated using the information presented in Sections 2.3 through 2.6. Figures 3 and 4 present management options applicable to brines and sludges/slurries, respectively. These figures present complete management trains. That is, they depict byproduct management methods, resulting residuals, and management options for those residuals. Individual cost chapters present residual factors to use to determine residual volumes that require further treatment or disposal. The overall byproduct management costs are determined by summing the capital and operation and maintenance costs from the treatment and disposal of all byproducts and residuals.

TABLE 8

TREATMENT SYSTEM SIZING

Technology	Capital Cost	Operation & Maintenance Cost
Gravity Thickening	Average	Average
Chemical Precipitation	Average	Average
Mechanical Dewatering	Average	Average
Non-mechanical Dewatering	Design	Average
Evaporation Ponds	Design	Average
POTW Discharge	Design	Average
Direct Discharge	Design	Average
French Drain	Design	Average
Land Application	Design	Average
Non-Hazardous Waste Disposal	NA	NA
Hazardous Waste Disposal	NA	NA
Radioactive Waste Disposal	NA	NA

Figure 3

BRINE TREATMENT AND DISPOSAL OPTIONS

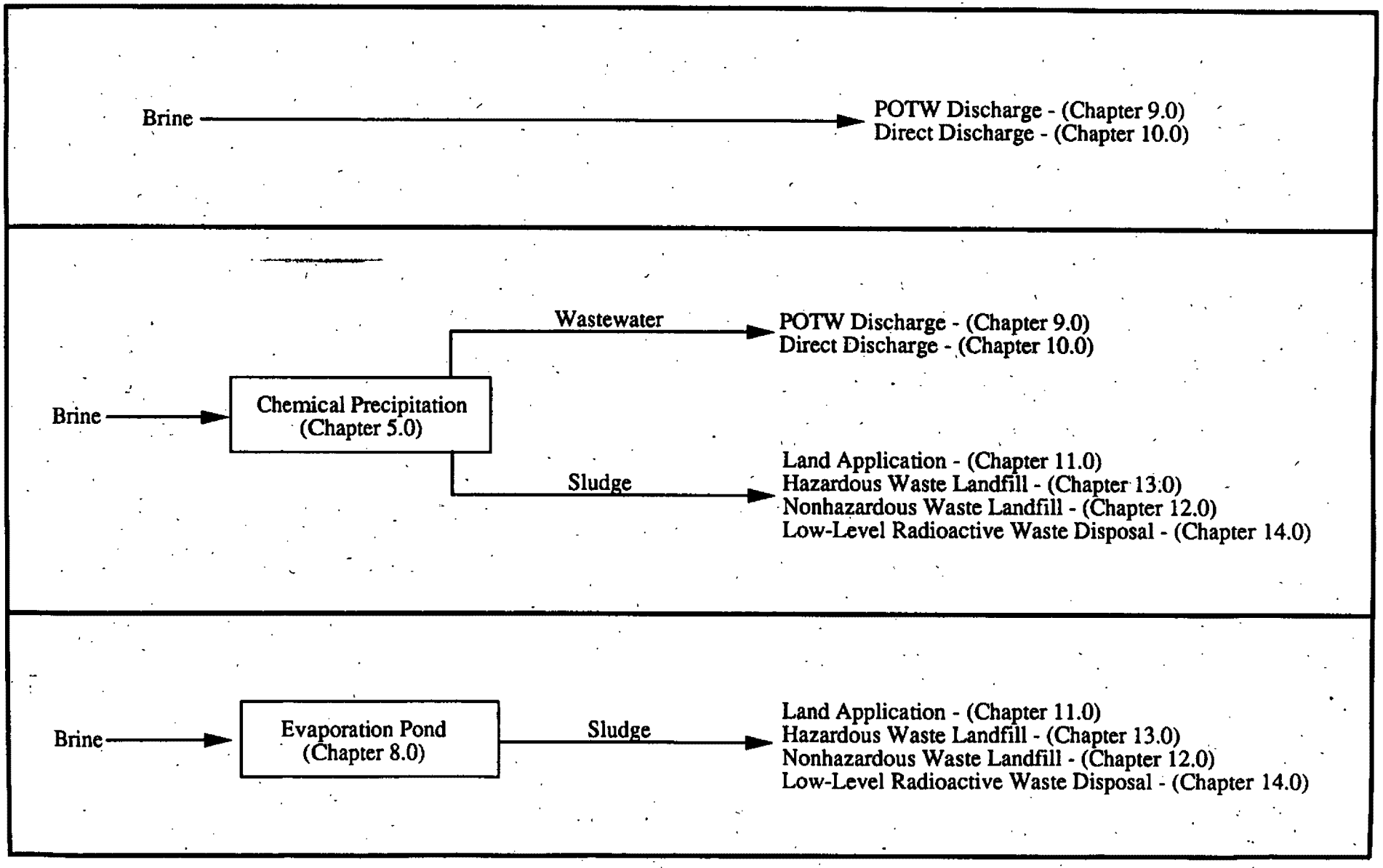

Figure 4

SLUDGE/SLURRY TREATMENT AND DISPOSAL OPTIONS

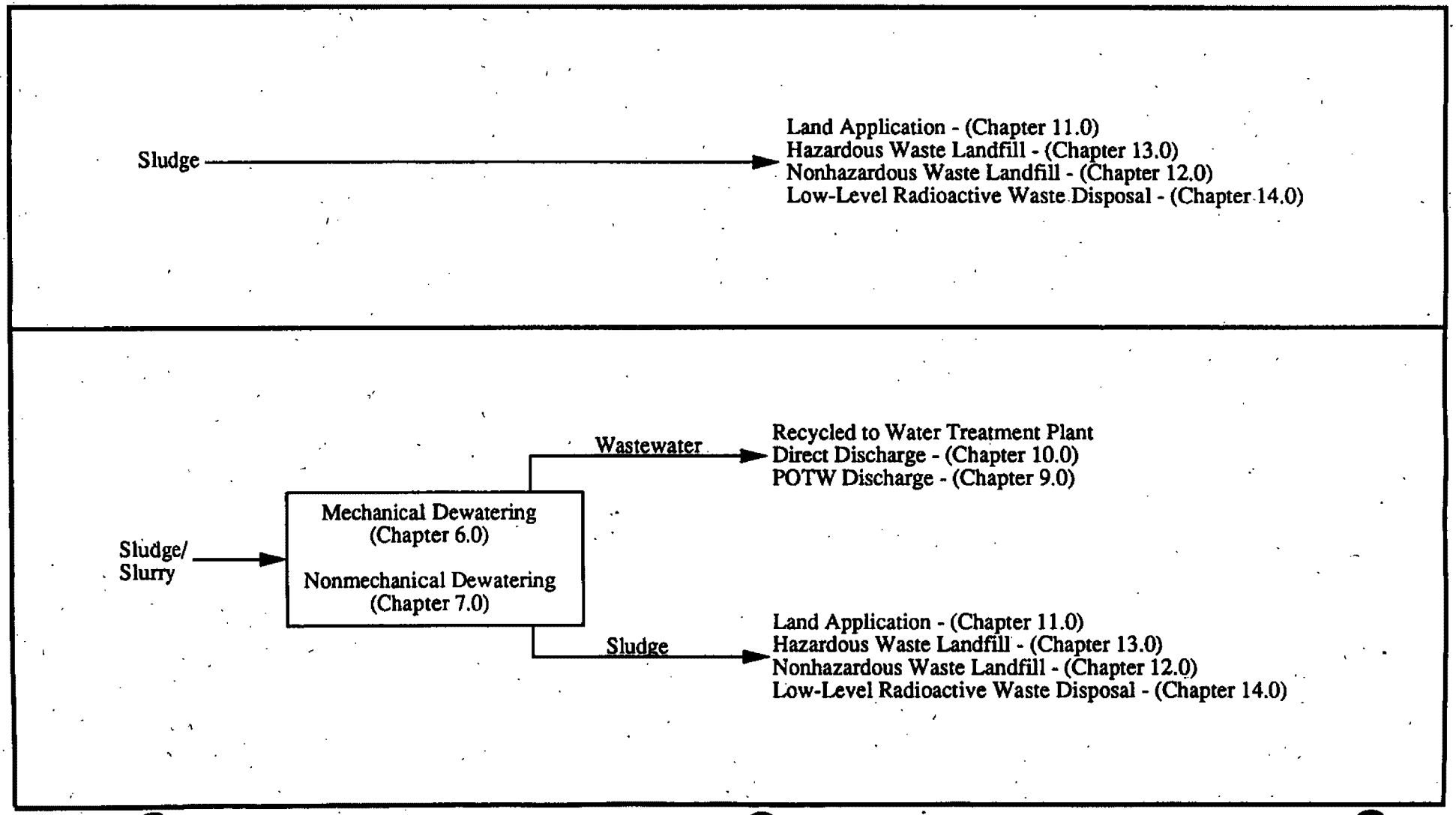

Figure 4

SLUDGE/SLURRY TREATMENT AND DISPOSAL OPTIONS (continued)

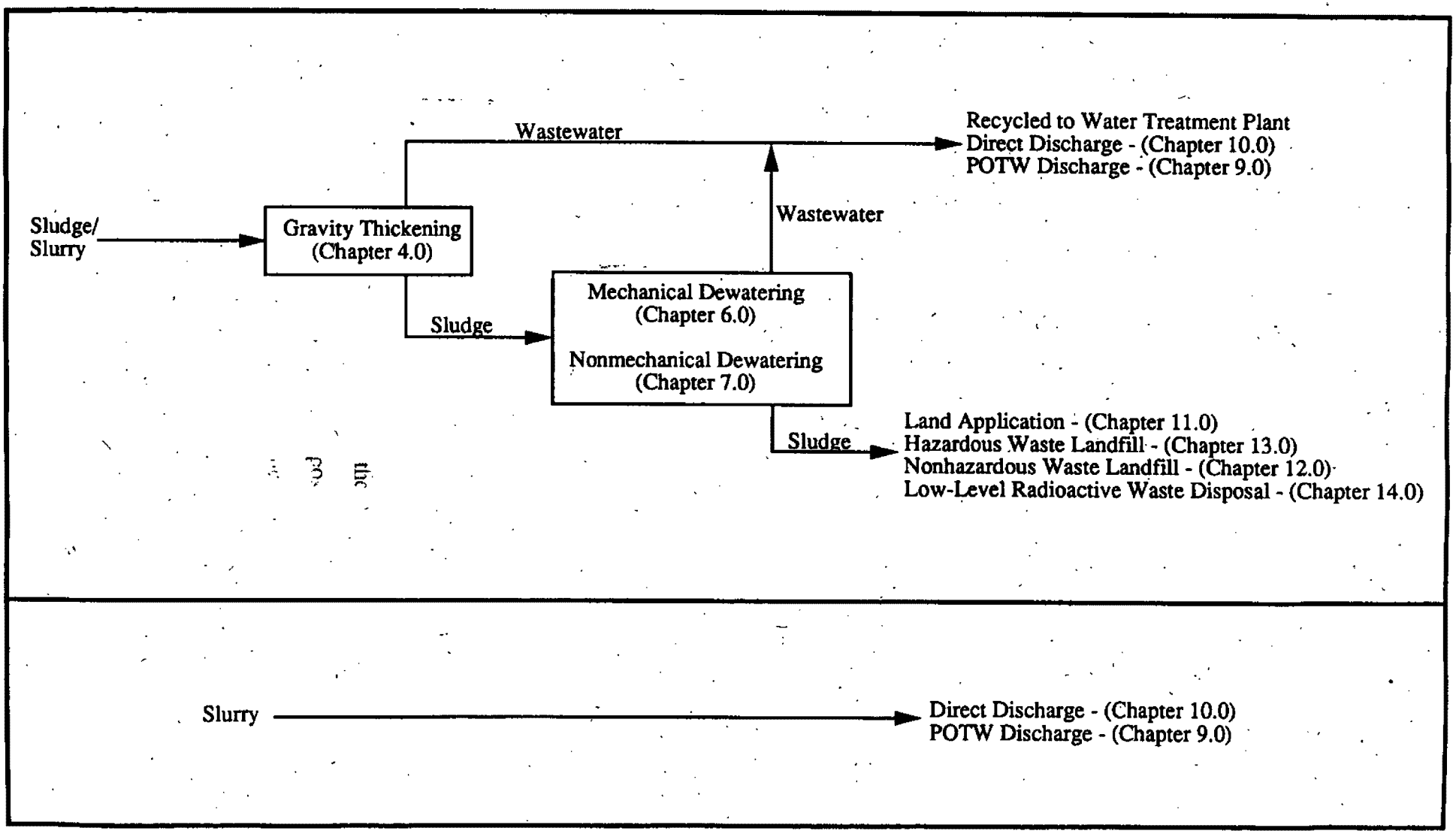

4.0 GRAVITY THICKENING

4.1 TECHNOLOGY DESCRIPTION

In this report, gravity thickening is a treatment technology considered for filter backwash and sludges. Gravity thickening serves to increase the solids concentration of the filter backwash and sludge streams so they can be treated by one of the dewatering methods addressed in the following sections.

Filter backwash byproducts are high volume, low solids slurries generated during the cleaning of water treatment plant filters. The volume of backwash waters generated varies for individual treatment plants and depends upon the number of filters and the frequency and duration of each backwash event. The total backwash volume is comprised of upflow backwash, downflow regeneration, and downflow rinse. In general, this volume ranges from 0.5 to 5.0 percent of the treated water with the larger treatment plants producing less backwash per million gallons of treated water than smaller treatment plants due to increased plant efficiency.

Where practical, backwash waters are recycled to the head of the treatment works for management. Recycling serves two purposes: it reduces the quantity of treated water lost to backwashing and it reduces the total volume of sludge generated. In cases where backwash recycling is not possible, discharge to a surface water, publicly-owned treatment works (POTW), or treatment by nonmechanical and mechanical dewatering are other treatment and disposal options.

In cases where backwash byproducts cannot be recirculated to the head of the plant nor discharged to a surface water or POTW, the backwash waters must be disposed as a water treatment slurry. Backwash waters are chemically similar to sludges produced by chemical coagulation, but are more dilute. Backwash waters have an average solids concentration of

0.08 percent, where chemical coagulation (alum) sludge have a solids concentration ranging from 0.5 to 2.0 percent.

Backwash water and sludges are gravity fed to a tank where gravity thickening is performed. Gravity thickening occurs by allowing suspended solids to settle naturally. The sludge discharged from the tank is routed for further treatment and the decant is either direct discharged or recycled to the head of the treatment plant.

4.2 TECHNOLOGY APPLICABILITY AND LIMITATIONS

For this report, gravity thickening is applicable to the filter backwash streams and sludges from chemical coagulation or lime softening byproducts streams. Because of the high volumes and low solids concentrations characteristic of these byproduct waste streams, pretreatment is necessary before the byproducts can be dewatered by the methods discussed in the remainder of this report. Pretreatment also is necessary to equalize the flow rates.

4.3 COST COMPONENTS

The following section presents the design assumptions, capital components, and the operation and maintenance components used to prepare the costs for this technology.

4.3.1 Design Assumptions

- Gravity thickening is used to pretreat filter backwash and sludges from chemical coagulation and lime softening.
- The filter backwash and sludge flow by gravity from the treatment plant to the settling tank.
- Each treatment facility has 1 or 2 filters. Each filter is backwashed twice a week with a backwash volume ranging from 490 to 24,200 gallons per event. These backwash volumes are generated in 20 minutes.
- The total backwash volume is either 2 or 2.5 percent of treated water.

- The backwash and sludge is allowed to settle in a tank for 3½ days.
- The volume of backwash and sludge is reduced by 90 percent.
- The thickened sludges are discharged to another treatment for further dewatering.

4.3.2 Capital Components

The capital components for each filter backwash system consist of the following items:

- Holding tank;
- Piping and fittings;
- Pump;
- Trenching;
- Electrical; and
- Instrumentation.

Table 9 indicates the number of filters, the filter backwash volume, and backwash settling tank capacities used to develop the capital cost equation for filter backwash.

TABLE 9

FILTER BACKWASH

Number of Filters	Filter Backwash Volume (gal/event)	Number of Tanks	Backwash Settling Tank Capacity (gal)
1	490	1	500
1	2,170	1	2,500
1	7,810	1	10,000
1	24,220	1	30,000
2	23,210	1	50,000

4.3.3 Operation and Maintenance Components

The operation and maintenance components for each gravity thickening system include the following items:

- Electricity;
- Labor;
- Maintenance labor and materials; and
- Insurance and general and administration.

4.3.4 Cost Components Excluded

The following cost components are not included in the cost equations for gravity thickening systems:

- Supernatant disposal, if the supernatant cannot be pumped to the head of the treatment plant; and
- Thickened sludge disposal.

Costs for supernatant disposal, if the supernatant cannot be pumped to the head of the treatment plant, and treatment of the thickened sludge can be determined using other sections of this document.

4.4 GRAVITY THICKENING COST EQUATIONS

The cost equations for the capital components and operation and maintenance were developed by estimating the costs for five different filter backwash and sludge flow rates. The filter backwash and sludge flow rate (X) used in the equations below is the average daily volume generated (e.g. 2.5 percent of the daily treated water flow rate). The capital cost equation calculates the total capital cost (i.e., installed capital plus indirect capital costs). The total annual cost is calculated based on the capital and operation and maintenance costs obtained using the equations presented below.

Capital Costs

$$Y = 1{,}500 + 0.01\,X$$

Where: Y = $
X = gallons of filter backwash/sludge per day

Range: 5,600 gpd $\leq X \leq$ 87,000 gpd

$$Y = 61.7\,X^{0.50} - 6{,}200$$

Where: Y = $
X = gallons of filter backwash/sludge per day

Range: 87,000 gpd $< X \leq$ 650,000 gpd

Operation and Maintenance

$$Y = 300 + 3.82 \times 10^{-3}\,X$$

Where: Y = $/year
X = gallons of filter backwash/sludge per day

Range: 5,600 gpd $\leq X \leq$ 87,000 gpd

$$Y = 3.60\,X^{0.50} - 400$$

Where: Y = $/year
X = gallons of filter backwash/sludge per day

Range: 87,000 gpd $< X \leq$ 650,000 gpd

Total Annual Cost

$$Y = [CAP \times CRF] + O\&M$$

Where:

Y = $/year
CAP = capital cost
CRF = capital recovery factor (e.g., 0.1175)
O&M = operation and maintenance cost

5.0 CHEMICAL PRECIPITATION

5.1 TECHNOLOGY DESCRIPTION

Chemical precipitation is applicable to aqueous byproduct streams such as ion exchange backwash and reverse osmosis brines. Chemical precipitation is frequently used to remove dissolved metals from aqueous solutions. It can be used to remove metal ions such as aluminum, antimony, arsenic, cadmium, chromium, copper, iron, lead, mercury, selenium, silver, thallium, and zinc. Hydroxide precipitation is the most widely used technology for removing trace metals from wastewaters. Lime, quicklime, soda ash, or caustic soda are commonly used as sources of hydroxide ions. Under suitable conditions, metals form insoluble metal hydroxides which can be separated from solution by clarification and filtration. Sulfide precipitation and ferrous salt precipitation also can be used depending on the metals present in solution.

The precipitation process involves adding a precipitant, such as hydroxide ions, to ion exchange or reverse osmosis brines in a stirred reactor vessel. The dissolved metals are converted to an insoluble form by a chemical reaction between the soluble metal ions and the precipitant. The resultant suspended solids are separated from the aqueous phase in a clarifier. Flocculation with or without a chemical coagulant or settling aid may be used to enhance the removal of suspended solids. The supernatant from the clarifier is either discharged to the sanitary sewer, to surface water or to the head of the treatment plant depending on the pH. Prior to disposal, the clarifier sludge may require additional dewatering by mechanical or nonmechanical means.

5.2 TECHNOLOGY APPLICABILITY

Chemical precipitation is used primarily for treatment of reverse osmosis and cation exchange waste brines. Chemical precipitation is used to remove the high levels of dissolved solids found in these waste streams where less expensive treatment and disposal options are not available. While technically feasible, chemical precipitation as a method to treat ion exchange and reverse osmosis brines is an expensive waste treatment/disposal option relative to options such as evaporation ponds, sanitary sewer discharge, french drain, and direct discharge. Chemical precipitation is economically more feasible for large systems treating more than 1 million gallons of water byproducts per day. If chemical precipitation is the only method available for ion exchange and reverse osmosis byproduct treatment, then ion exchange or reverse osmosis may not be economically feasible water treatment options for small facilities.

5.3 TECHNOLOGY LIMITATIONS

Anion exchange wastes cannot be treated by lime precipitation because sodium, chloride, and sulfate dissolved ions are not readily precipitated by lime. In addition, the effluent from the chemical precipitation process may still pose a disposal concern due to elevated levels of dissolved solids such as sodium, chloride, and sulfate remaining in the effluent.

As mentioned above, chemical precipitation may be a relatively expensive treatment option compared with french drain disposal, direct discharge, sanitary sewer discharge, and evaporation ponds. Chemical precipitation has higher capital costs and higher labor costs than many other byproduct treatment and disposal options. The higher labor costs are associated with the oversight necessary for proper operation of the system.

5.4 COST COMPONENTS

The following section presents the design assumptions, capital components, and the operation and maintenance components used to prepare the costs for this technology.

5.4.1 Design Assumptions

- The chemical precipitation system consists of mixing and holding tanks for the lime solution, a precipitation tank, a clarifier, agitators, and pumps.
- The precipitation tank has a ½-hour retention time and a 5 percent overdesign.
- The clarifier (settling tank) has a 1- to 2-hour retention time.
- Waste brines flow to the treatment system under pressure from the ion exchange or reverse osmosis system.
- The chemical precipitation equipment is located in the water treatment building.
- Sludge from the clarifier may require additional dewatering prior to disposal.
- The sludge volumes generated by chemical precipitation are 5 and 2 percent of the influent volumes for reverse osmosis and ion exchange brines, respectively.

5.4.2 Capital Components

The capital components for each chemical precipitation system consist of the following items:

- Carbon steel mixing tank;
- Carbon steel precipitation tank;
- Clarifier/settling tank;
- Agitators;
- Sludge pumps;
- Building;
- Piping;
- Electrical; and
- Instrumentation.

Table 10 indicates the brine volumes, tank capacities, and clarifier capacities used to develop the capital cost equation for chemical precipitation.

TABLE 10

CHEMICAL PRECIPITATION

Byproduct Flow Rate (gal/day)	Precipitation Tank Size (gallons)	Mix Tank Capacity (gallons)	Clarifier Capacity (gallons)
3,930	200	30	800
12,200	400	40	1,600
29,300	650	50	2,500
67,500	2,000	75	8,000
162,500	5,000	100	20,000
274,000	6,000	200	24,000
350,000	8,000	300	30,000
500,000	12,000	600	40,000
1,000,000	23,000	1,200	50,000

5.4.3 Operation and Maintenance Components

The operation and maintenance components for each chemical precipitation system include the following items:

- Lime;
- Electricity;
- Labor;
- Maintenance labor and materials;
- Insurance and General and Administration; and
- Water.

5.4.4 Cost Components Excluded

The following cost components are not included in the cost equations for chemical precipitation systems since they are accounted for elsewhere in the document:

- Sludge dewatering (if needed for the selected disposal option);
- Sludge disposal; and
- Clarifier overflow disposal, if the overflow cannot be pumped to the head of the treatment works.

Costs for sludge dewatering and sludge disposal techniques are included in other sections of this document. Costs for clarifier overflow disposal, if the overflow cannot be pumped to the head of the treatment works, can be determined using other sections of this document.

5.5 COST EQUATIONS

The cost equations for the capital components and operation and maintenance were developed by estimating the costs for seven different brine flow rates. The capital cost equation calculates the total capital cost (i.e., installed capital plus indirect capital costs). Equipment costs and building costs are separate components in the capital cost equation to enable the user to exclude the cost for a building addition if it is not necessary. The total annual cost is calculated based on the capital and operation and maintenance costs obtained using the equations presented below.

<u>Capital Costs</u>

$$Y = [1{,}500\ X^{0.36}] + [4{,}900 + 135.5\ X^{0.50}]$$

$$Y = [\text{Equipment Cost}] + [\text{Building Cost}]$$

Where: $Y = \$$
X = gallons of brine per day

Range: $3{,}000 \text{ gpd} \leq X \leq 162{,}500 \text{ gpd}$

$$Y = [1{,}500\ X^{0.36}] + [253\ X^{0.50} - 39{,}300]$$

$$Y = [\text{Equipment Cost}] + [\text{Building Cost}]$$

Where: $Y = \$$
X = gallons of brine per day

Range: $162{,}500 \text{ gpd} < X \leq 1{,}000{,}000 \text{ gpd}$

Operation and Maintenance

$$Y = 366\ X^{0.40}$$

Where: $Y = \$/\text{year}$
X = gallons of brine per day

Range: $3{,}000 \text{ gpd} \leq X \leq = 162{,}500 \text{ gpd}$

$$Y = 19{,}900 + 0.15\ X$$

Where: $Y = \$/\text{year}$
X = gallons of brine per day

Range: $162{,}500 < X \leq 1{,}000{,}000$

Total Annual Cost

$$Y = [\text{CAP} \times \text{CRF}] + \text{O\&M}$$

Where: $Y = \$/\text{year}$
CAP = capital cost
CRF = capital recovery factor (e.g., 0.1175)
O&M = operation and maintenance cost

6.0 MECHANICAL DEWATERING

Mechanical dewatering processes include centrifuges, vacuum-assisted dewatering beds, belt filter presses, and plate and frame filter presses. These processes have relatively high capital and operation and maintenance costs compared to similarly sized nonmechanical processes. Mechanical dewatering is not applicable to very small water plants due to the high capital costs associated with these technologies and limited equipment sizes available. Though this mechanical dewatering is more applicable to larger water plants, it is included here since equipment is available for byproduct flow rates addressed in this document. Pressure filter press technology, applicability, limitations, and costs are presented in this section.

6.1 TECHNOLOGY DESCRIPTION

A pressure filter, or plate and frame, press is a mechanical sludge dewatering method using a positive pressure differential to separate free liquid from the sludge. Pressure filter presses operate as batch processes. The press consists of adjacent plates that form a leak-proof seal when electrically or hydraulically brought together. A positive displacement pump moves sludge into chambers between the two plates. Initially the pump supplies a high volume of sludge to the chamber at a low pressure. As the chamber fills, the pump creates positive pressure on the sludge which forces liquid from the sludge. The pressure increases until the desired solids concentration is achieved. After pumping ceases, the plates are separated and the sludge cake is dropped into a container or onto a conveyor.

Pressure filter presses consist of multiple filter plates on metal frames. The capacity of a press depends on the number and size of the plates and on the depth of the chamber between the plates. Plates are available in a variety of sizes, shapes and materials. The choice of filter media adds additional variation to the performance of an individual press. Filter media

varies in its particle retaining size, permeability, durability, and its ease of cake release. Sludge type and the initial solid's concentration of a sludge affect the filter media choice.

6.2 TECHNOLOGY APPLICABILITY

With proper sludge conditioning, pressure filter presses can effectively dewater both lime and alum sludges. Lime sludges attain final solid concentrations of 40 to 70 percent while alum sludges attain 35 to 50 percent final solid's concentrations. Dewatering with a filter press is a batch process; each batch remains under pressure until the desired solids concentration is achieved. This produces a consistent product. Filter presses produce a filtrate that has a lower suspended solids concentration than filtrates from other mechanical dewatering methods.

Pressure filter presses have been used in water treatment and industrial processes for many years. Use of pressure filter presses in the water treatment industry has been increasing in the last several years. They are especially applicable for facilities that want to achieve a high sludge solids content. The high solid's content achieved by pressure filter presses makes this a suitable technique to dewater sludges before landfill.

Plate and frame filter presses have low land requirements, high capital costs, and are labor intensive. They typically have higher capital and operating costs than comparable nonmechanical dewatering alternatives. The high labor and capital requirements make them more applicable to larger water systems.

6.3 TECHNOLOGY LIMITATIONS

Available equipment sizes and equipment costs limit the applicability of this technology for small water systems. Sludge flow rates less than 100 gallons per day are not applicable to filter press dewatering. Even at 100 gallons per day, the filter press equipment is oversized.

Although the suspended solid's concentration of the filtrate is low, filtrate disposal may be a problem. Proper preconditioning of alum sludges before filter press dewatering normally requires the addition of lime. Lime is used to lower the alum sludge's resistance to filtration. A lime mixture is added to the alum sludge until a pH of approximately 11 is achieved. The lime conditioning not only increases the total sludge volume (by as much as 20 to 30 percent by weight), but also increases the pH of the resulting filtrate. The final filtrate pH may be too high for sanitary sewer disposal or for recirculation to the head of the treatment plant.

Pumps that deliver sludge to the filter press must be capable of operating under a variety of conditions. During initial pumping, sludge flow rates are high and pressures are low. Toward the end of the cycle, the sludge flow rate is almost zero while pressures range from 100 to 200 psi. A positive displacement pump such as a progressive cavity pump must be used to achieve required flow rates and pressures. A second alternative is to use two pumps: one to deliver high flow rates at low pressure and a second to deliver high pressure and low flow rates.

Filter media must be cleaned every eight to ten cycles to ensure proper operation. Filter cleaning is a time-consuming process requiring an acid wash to dissolve built up calcium carbonate from press plates. The acid wash creates disposal problems due to its low pH. Precoating the press reduces blinding and required frequency of cleaning, but adds to operation and maintenance costs and potentially adds trace metals to the filtrate.

As with all mechanical dewatering methods, proper preconditioning of alum sludges is essential to ensure efficient sludge dewatering. Sufficient quantities of lime must be added and a 20- to 30- minute contact time is required to develop the necessary dewatering qualities.

6.4 COST COMPONENTS

The following section presents the design assumptions, capital components, and the operation and maintenance components used to prepare the costs for this technology.

6.4.1 Design Assumptions

- Pressure filter presses are effective for sludge flow rates greater than 100 gallons per day.
- Stainless steel filter presses with paper filter media are used for flow rates less than 500 gallons per day.
- Sludge flows by gravity to a polymer feed system.
- The polymer feed system consists of a polymer storage tank, a polymer pump, a polymer/sludge contact tank and a 20- to 30-minute holding tank.
- A positive displacement pump delivers sludge to the filter press.
- The filter press operates on a batch basis.
- Filtrate collects in a filtrate holding tank before being pumped to the head of the treatment plant.
- Filter cake collects in a small, wheeled container, which is emptied into a larger solid's bin as necessary.
- Accumulated solids require disposal on a periodic basis.
- The dewatered sludge volume is 0.03 and 8 percent of the initial volume for lime and alum sludges, respectively.

6.4.2 Capital Components

The capital components for each pressure filter press system consist of the following items:

- Pressure filter press;

- Polymer feed system;
- Positive displacement pump;
- Steel filtrate tank and pump;
- Filter cake storage bin;
- Building;
- Piping;
- Electrical; and
- Instrumentation.

Table 11 shows the sludge volumes, settling tank/gravity thickener capacities, and filter press capacities used to develop the capital cost equation for pressure filter presses.

TABLE 11

PRESSURE FILTER PRESSES

Sludge Flow Rate (gal/day)	Filter Press Capacity (cu. ft.)
100	0.5
500	2.0
2,000	10
5,000	24
10,000	24

6.4.3 Operation and Maintenance Components

The operation and maintenance components for each pressure filter press system include the following items:

- Electricity;
- Polymer;
- Labor;
- Maintenance labor and materials; and
- Insurance and general and administration.

6.4.4 Cost Components Excluded

The following cost components are not included in the cost equations for pressure filter press systems:

- Dewatered sludge disposal; and
- Filtrate disposal, if the filtrate cannot be pumped to the head of the treatment plant.

Costs for sludge disposal techniques are included in other sections of this document. Costs for filtrate disposal, if the overflow cannot be pumped to the head of the treatment works, can be determined using other sections of this document.

6.5 COST EQUATIONS

The cost equations for the capital components and operation and maintenance were developed by estimating the costs for five different sludge flow rates. The capital cost equation calculates the total capital cost (i.e., installed capital plus indirect capital costs). Equipment costs and building costs are separate components in the capital cost equation to enable the user to exclude the cost for a building addition if it is not necessary. The total annual cost is calculated based on the capital and operation and maintenance costs obtained using the equations presented below.

<u>Capital Cost</u>

$$Y = [11{,}500 + 1{,}155\ X^{0.50}] + [3{,}500 + 143\ X^{0.50}]$$

$$Y = [\text{Equipment Cost}] + [\text{Building Cost}]$$

Where: $Y = \$$
X = gallons of sludge per day

Range: $100 \text{ gpd} \leq X < 2{,}000 \text{ gpd}$

$$Y = [11{,}500 + 1{,}155\ X^{0.50}] + [10{,}000]$$

$$Y = [\text{Equipment Cost}] + [\text{Building Cost}]$$

Where: $Y = \$$
X = gallons of sludge per day

Range: $2{,}000 \text{ gpd} \leq X \leq 10{,}000 \text{ gpd}$

Operation and Maintenance

$$Y = 578\ X^{0.50} - 400$$

Where: $Y = \$/\text{year}$
X = gallons of sludge per day

Range: $100 \text{ gpd} \leq X < 10{,}000 \text{ gpd}$

Total Annual Cost

$$Y = [CAP \times CRF] + O\&M$$

Where: $Y = \$/\text{year}$
CAP = capital cost
CRF = capital recovery factor (e.g., 0.1175)
O&M = operation and maintenance cost

7.0 NONMECHANICAL DEWATERING

Nonmechanical dewatering of sludges and slurries is performed in sand drying beds, storage lagoons, and permanent lagoons. Nonmechanical dewatering processes are characterized by their simplicity to operate and maintain. In sand drying beds and storage lagoons, dewatered sludge is removed for disposal via land application or in a landfill. A permanent lagoon dewaters the sludge and is the final disposal site for the sludge. Costs were developed for two nonmechanical dewatering processes: sand drying beds and dewatering lagoons.

7.1 SAND DRYING BED DESCRIPTION

A sand drying bed is a nonmechanical means of dewatering sludges that utilizes drainage, decanting, and evaporation. The technology involves spreading an even layer of thickened sludge (solid concentrations of 1 to 4 percent for coagulant sludges and 2 to 6 percent for softening sludges) over a draining sand bed. Free water in the sludge gravity drains through the sand to the underdrains or forms a supernatant layer that is decanted. Most gravity and decant drainage occurs in the first few days after application. After this time, evaporation is the primary dewatering process and the sludge remains on the drying bed until the desired solids concentration is achieved. The depth of initial sludge application and the time required for the sludge to dry on the sand bed are functions of several variables that need to be determined individually for each treatment unit.

Drying beds are frequently constructed of concrete walls and floor with slotted pipe underdrains buried beneath 18 to 24 inches of graded sand and gravel. Sludge from a thickener is batch applied to the sand through one or several inlet structures. Free water drains from the sludge through the sand bed to the underdrains. As they accumulate, supernatant and rain water are drawn off by a variable height outlet structure. After drying, sludge cake is removed manually by shovel and wheel barrow or mechanically with a small

front end loader or tractor.

The method of sludge removal and the requirements at the ultimate disposal site determine the desired sludge cake solid's concentration. Manual sludge removal, using a shovel and wheelbarrow, requires solids' concentration of approximately 25 percent to ensure proper sludge handling. Mechanically removing sludge by a vacuum truck or a front end loader requires solids' concentrations in the range of 15 to 25 percent. Many landfills require sludge cakes to have a minimum of 20 percent dry solids to meet acceptance criteria.

Sludge removal and disposal costs are a large percentage of the total operation and maintenance costs for drying beds. Disposal costs of the solids are not included in this section, but can be determined by using the information presented in other sections of this document. Sludge removal costs are directly related to the number of sludge applications per drying bed per year. Less frequent, thicker, sludge applications result in a thicker sludge cake that has lower unit costs for removal but may require more drying bed area. Individual treatment plants must determine their most cost effective drying times and disposal frequencies.

7.2 TECHNOLOGY APPLICABILITY

Sand drying beds effectively dewater lime and alum sludges to solids concentrations of 50 percent and 20 to 25 percent, respectively. At these solid's concentrations, both sludges are suitable for landfilling or land application. Lime sludges have a smaller percentage of chemically-bound water and dewater more quickly than coagulant sludges.

7.3 TECHNOLOGY LIMITATIONS

For alum sludge, which contains as much as 40 percent bound water, chemical conditioning by polymers is frequently necessary to aid in the rapid release of water from the sludges.

Chemical conditioning causes the sludge to set quickly. Once the polymer is incorporated into the sludge, rapid application of a uniform depth of sludge is necessary for effective dewatering and uniform drying. Several sludge application points in a drying bed or smaller bed sizes may be necessary to ensure even application and drying of alum sludges. Consequently, due to the increased labor and operating requirements associated with alum sludges, it is unlikely that sand drying beds would be used for treating these sludges.

Seasonal weather conditions affect the time sludge must remain on the drying beds. Treatment plants located in northern or seasonally wet areas, must prepare for longer bed drying times in cold or damp weather. Enclosing the drying beds reduces the variation in drying times by shielding the sludge cake from rain and snow and increasing the ambient temperature around the beds. Other options are to lagoon sludge during bad weather for application at a later date or to build extra beds.

Drying beds are not effective for sludges with very low suspended solid's concentrations or sludges with high percentages of dissolved solids. Low solids' sludges (less than 1 percent solids) will move through and blind sand beds, reducing the beds' effectiveness. These sludges must be thickened before drying bed application. High dissolved solid sludges, such as the waste brines generated by reverse osmosis, are not effectively captured by drying beds because the dissolved solids flow through sand beds into the underdrains.

7.4 SAND DRYING BED COST COMPONENTS

The following section presents the design assumptions, capital components, and the operation and maintenance components used to prepare the costs for this technology.

7.4.1 Design Assumptions

- Sand drying beds are used to dewater lime or non-alum sludges.

- Sludges flow to the lagoons or tanks via 500 feet of 2- to 6-inch diameter PVC piping buried 4 feet below the ground surface.

- The tanks or lagoons are sized to hold 21 or 42 days of volume. Typically 15 or 30 days of volume are necessary; however, the additional lagoon capacity is provided for slower drying conditions.

- Sludge is concentrated to 3 percent solids by weight in a lagoon or tank through decanting and evaporation; the sludge volume is reduced by 67 percent.

- The lagoons are constructed with a synthetic membrane liner and a geotextile support fabric.

- The lagoon bottom slopes to a sump.

- No polymers are added to the sludge.

- An 18-inch layer of sludge containing 3 percent solids is applied 6 to 12 times per year to each sand bed.

- The sludge pump and the drying bed piping are sized to deliver sludge to the drying bed from the lagoon in one to two hours. Drying beds are located 100 feet from the lagoon.

- Drying beds are sized to hold 33 percent of the initial sludge volume applied to the bed in an 18-inch layer. Increased sizing is used to offset slower drying times in bad weather.

- Underdrains consisting of 2- to 6-inch diameter PVC piping collect filtrate.

- Drying beds are constructed of reinforced concrete with a 6-inch bottom slab and 8-inch walls. The bed contains 18 inches of sand. The underdrain piping rests in 6 inches of gravel underneath the sand.

- The final solid's concentration is 20 percent by weight. Five percent of the initial sludge volume (0.7 cubic feet of solids per 100 gallons of initial sludge volume) requires final disposal.

- The sludge cake is removed from beds either removed manually or by using a small front-end loader depending on the total surface area of the beds.

7.4.2 Capital Components

The capital components for each sand drying bed system consist of the following items:

- Dewatering tank or lagoon;
- Piping and fittings;
- Pumps;
- Trenching;
- One, two, or four sand drying beds;
- Land clearing;
- Electrical; and
- Instrumentation.

Table 12 shows the sludge volumes, number of beds, and the total required surface area used to develop the capital cost equation for sand drying beds.

TABLE 12

SAND DRYING BEDS

Sludge Volume (gal/day)	Number of Beds	Total Surface Area (ft^2)
20	1	25
100	2	150
500	2	750
2,000	2	2,500
5,000	4	3,200
10,000	4	7,000

7.4.3 Operation and Maintenance Components

The operation and maintenance components for each sand drying bed system include the following items:

- Electricity;
- Sand replacement;
- Labor;
- Maintenance labor and materials; and
- Drying bed cleaning.

7.4.4 Cost Components Excluded

The following cost components are not included in the cost equations for sand drying bed systems:

- Drying bed enclosures;
- Polymers and polymer feed system;
- Dewatered sludge disposal; and
- Supernatant disposal, if the supernatant cannot be pumped to the head of the treatment plant.

Costs for sludge disposal techniques are included in other sections of this document. Costs for supernatant disposal, if the supernatant cannot be pumped to the head of the treatment plant, can be determined using other sections of this document.

7.5 SAND DRYING BED COST EQUATIONS

The cost equations for the capital components and operation and maintenance were developed by estimating the costs for six different sludge flow rates. The capital cost equation calculates the total capital cost (i.e., installed capital plus indirect capital costs). Equipment costs and land costs are separate components in the capital cost equation to enable the user to exclude the cost for purchasing land if it is not necessary. The total annual cost is calculated from the capital and operation and maintenance costs obtained using the equations presented below.

<u>Capital Costs</u>

$$Y = [8{,}670\ X^{0.25}] + [0.5\ X]$$

$$Y = [\text{Equipment Cost}] + [\text{Land Cost}]$$

Where: $Y = \$$
X = gallons of sludge per day
Z = land cost in dollars per acre (e.g., $1,000/acre)

Range: $20 \text{ gpd} \leq X \leq 1{,}000 \text{ gpd}$

$$Y = [1{,}936\, X^{0.50} - 18{,}900] + [(9.69 \times 10^{-2} + 1.89 \times 10^{-4}\, X)\, Z]$$

$$Y = [\text{Equipment Cost}] + [\text{Land Cost}]$$

Where: $Y = \$$
X = gallons of sludge per day
Z = land cost in dollars per acre (e.g., $1,000/acre)

Note: For systems less than 2,000 gallons of sludge per day, 1/2 acre of land is required.

Range: $1{,}000 \text{ gpd} < X \leq 10{,}000 \text{ gpd}$

Operation and Maintenance

$$Y = 3{,}000 + 64.5\, X^{0.50}$$

Where: $Y = \$/\text{year}$
X = gallons of sludge per day

Range: $20 \text{ gpd} \leq X \leq 1{,}000 \text{ gpd}$

$$Y = 190\, X^{0.50} - 1{,}600$$

Where: $Y = \$/\text{year}$
X = gallons of sludge per day

Range: $1{,}000 \text{ gpd} < X \leq 10{,}000 \text{ gpd}$

Total Annual Cost

$$Y = [\text{CAP} \times \text{CRF}] + \text{O\&M}$$

Where: Y = $/year
CAP = capital cost
CRF = capital recovery factor (e.g., 0.1175)
O&M = operation and maintenance cost

7.6 STORAGE LAGOON DESCRIPTION

Storage lagoons, although land intensive, have historically been the most common and the least expensive method to thicken or dewater water treatment sludge. The lagoons are lined ponds designed to collect and dewater sludge for a predetermined period of time. Dewatering of the sludge occurs by decanting the supernatant and by evaporation. Additional dewatering can also be achieved if the lagoons have a sand bottom. Storage lagoons are sized according to the sludge volumes generated and storage time required for an individual treatment facility. When a storage lagoon has reached its designed capacity, the remaining solids are typically removed from the lagoon using a front-end loader and hauled off site for final disposal. Some treatment works use permanent lagoons as long-term disposal sites for sludges. As one lagoon fills, another one is excavated.

Lagoons are usually earthen basins with gradual side slopes. Sizes range from less than one to 15 acres and from four to 20 feet deep. Clay or synthetic liners cover the bottom and sidewalls to prevent ground water infiltration of sludge leachate. Sludge flows from the treatment plant by gravity or is pumped to the lagoon through an underground pipe. The lagoon inlet structure is designed to reduce turbulence in the lagoon caused by the incoming sludge. The outlet structure usually provides for decanting of the supernatant at various draw-off depths.

If the water byproduct residuals managed in the lagoons are determined to be hazardous waste, these lagoons are subject to compliance with hazardous waste regulations for surface impoundments. These regulations specify that the impoundments must be triple-lined with a

synthetic flexible membrane liner and a composite double liner. Although there are no federal requirements specifying the design for lagoons containing nonhazardous waste at this time, regulations regarding nonhazardous waste in lagoons may be enacted in the future. Therefore, good engineering practice suggests that at a minimum a synthetic liner should be included in the design of the lagoon.

7.7 TECHNOLOGY APPLICABILITY

Storage lagoons are primarily used for the dewatering of lime softening sludge, although coagulant (alum) sludge also can be dewatered in certain situations. Final solids' concentrations reported for lime and alum sludges after lagooning are 20 to 60 percent and seven to 15 percent, respectively. The higher solid concentrations (greater than 50 percent) are achieved through decanting of the supernatant layer and allowing the sludge to air dry.

Lagoons can operate under a variety of sludge flows and solids concentrations. Lagoons with low-turbulence inlet structures and outlet structures designed to minimize suspended solids carryover can accept backwash waters directly from the filters. This eliminates the need for backwash holding tanks and sludge thickeners. Lagoons can withstand large variances in sludge quality and do not require chemical conditioning of alum sludges.

Lagoons in areas with beneficial climates can achieve greater sludge dewatering. In areas with hot, dry climates, storage lagoons function as evaporation ponds and can dewater both alum and lime sludges to solid's concentrations suitable for land filling. In northern climates, natural winter freezing dehydrates alum sludges and releases chemically bound water in the sludge. When the frozen sludge thaws it retains a granular composition and precipitates to the lagoon bottom. After the supernatant is decanted, solids with the consistency of coffee grounds remain and are suitable for land filling.

7.8 TECHNOLOGY LIMITATIONS

Lagoons frequently do not produce a dewatered sludge suitable for landfill disposal. In particular, alum sludges do not dewater well in lagoons. The top layer of sludge dries, hardens and seals the moisture in the layers below. Even after several years of storage, alum sludges may need further dewatering to meet the 20 percent solids concentration required by many landfills. Often, alum sludge is allowed to dry further after removal from the lagoon and prior to hauling from the site. Thickened alum sludges are difficult to remove from lagoons. Removal requires specialized dredging or vacuum equipment and knowledgeable operators. Consequently, lagoons will not be considered for treatment/disposal of alum sludges.

Lagoons are a land intensive dewatering process. Water treatment facilities with limited land availability will need to consider the costs of regular lagoon cleaning and sludge disposal or the cost of acquiring land for additional lagoons when evaluating the feasibility of this technology. In addition, permanent lagoons that act as final disposal sites for sludges may be considered solid waste landfills in some states. As such, the lagoons would need to meet the design, ground water monitoring, and permitting requirements of the state's environmental regulatory agency.

There is also a limitation on how small a lagoon can be sized. This limitation results since a lagoon is an engineered excavation rather than simply a hole dug in the ground. To maintain and construct the side slopes of the lagoon, the bottom surface area must be of sufficient size to accommodate the equipment used.

7.9 STORAGE LAGOONS COST COMPONENTS

The following section presents the design assumptions, capital components, and the operation and maintenance components used to prepare the costs for this technology.

7.9.1 Design Assumptions

- Permanent lagoons are used to dewater lime sludges; each lagoon has a storage capacity of ten years.

- The lagoons are earthen basins lined with a synthetic membrane and a geotextile support fabric. They have no underdrains, but have a variable height outlet structure to discharge supernatant.

- Sludge flow rates range from 100 to 10,000 gallons per day (gpd). Although small system lime softening units generate less than 100 gpd of sludge, the lagoons cannot be constructed to engineering specifications at sizes less than 100 gpd.

- Sludge is gravity fed to the lagoons from the treatment plant via 750 feet of 2-inch diameter PVC piping buried 4 feet below the ground surface.

- Decanted supernatant from the lagoon is collected and pumped to the head of the treatment plant.

- Treatment plants operate two permanent lagoons to provide 20 years of permanent storage. Each lagoon has a 12-month storage capacity. Free liquid is continuously decanted from the lagoon while it is accepting sludge and returned to the head of the treatment plant. After the 12-month period, the other lagoon is used while free liquid from the idle lagoon is decanted and evaporated. The remaining sludge is allowed to dry before the next sludge application.

7.9.2 Capital Components

The capital components for each storage lagoon consist of the following items:

- Earthen lagoons;
- Piping and fittings;
- Trenching;
- Decant collection tank and pump;
- Electrical;
- Instrumentation; and
- Land clearing.

Table 13 displays the sludge volumes, number of ponds, and total lagoon surface area used to develop the capital cost equation for lime softening lagoons.

TABLE 13

STORAGE LAGOONS - LIME SOFTENING SLUDGE

Lime Softening Sludge Volume (gal/day)	Number of Ponds	Total Surface Area (acres)
100	2	0.04
500	2	0.18
1,000	2	0.40
2,000	2	0.80
4,000	2	1.5
10,000	2	3.8

7.9.3 Operation and Maintenance Components

The operation and maintenance components for each storage lagoon include the following items:

- Labor;
- Maintenance labor and materials; and
- Electricity.

7.9.4 Cost Components Excluded

The following cost components are not included in the cost equations for storage lagoons:

- Sludge dewatering equipment; and
- Supernatant disposal, if the supernatant cannot be pumped to the head of the treatment plant.

Costs for sludge disposal techniques are included in other sections of this document. Costs for supernatant disposal, if the supernatant cannot be pumped to the head of the treatment plant, can be determined using other sections of this document.

7.10 STORAGE LAGOON COST EQUATIONS

The cost equations for the capital components and operation and maintenance were developed by estimating the costs for six different sludge flow rates. The capital cost equation calculates the total capital cost (i.e., installed capital plus indirect capital costs). Equipment costs and land costs are separate components in the capital cost equation to enable the user to exclude the cost for purchasing land if it is not necessary. The total annual cost is calculated from the capital and operation and maintenance costs obtained using the equations presented below.

Capital Costs

$$Y = [10{,}900 + 1{,}729\ X^{0.50}] + [(5.33 \times 10^{-4}\ X^{0.97})\ Z]$$

$$Y = [\text{Equipment Cost}] + [\text{Land Cost}]$$

Where: Y = $
X = gallons of sludge per day
Z = land cost in dollars per acre (e.g., $1,000/acre)

Range: 100 gpd ≤ X ≤ 1,500 gpd

$$Y = [6{,}100\ X^{0.50} - 148{,}300] + [(5.33 \times 10^{-4}\ X^{0.97})\ Z]$$

Where: Y = $
X = gallons of sludge per day
Z = land cost in dollars per acre (e.g., $1,000/acre)

Range: 1,500 < X ≤ 10,000 gpd

Operation and Maintenance

$$Y = 2{,}100 + 0.30\ X^{0.50}$$

Where: Y = $/year
X = gallons of sludge per day

Range: 100 gpd $\leq$ X $\leq$ 10,000 gpd

Total Annual Cost

$$Y = [CAP \times CRF] + O\&M$$

Where: Y = $/year
CAP = capital cost
CRF = capital recovery factor (e.g., 0.1175)
O&M = operation and maintenance cost

8.0 EVAPORATION PONDS

8.1 TECHNOLOGY DESCRIPTION

Evaporation ponds are a nonmechanical means by which favorable climatic conditions are used to dewater waste brines generated by treatment processes, such as reverse osmosis and ion exchange. The technology involves discharging the waste brines to ponds or lagoons for storage and evaporation. The lagoons are designed with a large surface area to allow solar and wind evaporation to dewater the brine. Pond sizes are determined by the surface area required to evaporate the waste flows and by the desired storage capacity.

Evaporation ponds normally have an earthen construction with gradually sloping berms. Inlet piping transfers the wastes by gravity flow, or in the case of reverse osmosis, by the operating pressure from the treatment plant, to the lagoon. Outlet piping from the pond may be needed in situations where the sludge loading exceeds the design capacity of the pond or for handling overflows in emergency conditions; otherwise, no outlet is necessary. Synthetic or clay liners may be necessary to prevent leaching of brine solutions into subsurface soil and ground water. Site-specific soil and hydrogeologic information will determine if lining of the pond bottom and sidewalls is required.

Depending on the total dissolved solids (TDS) concentration of the brine, solids removal may be required from the pond on an intermittent basis. For brines with a TDS concentration ranging from 15,000 to 35,000 milligrams per liter (mg/l), solids will accumulate within the pond at a rate of ½ to 1½ inches per year. When these solids reach a predetermined depth, inflow to the pond is stopped and evaporation continues until a solid concentration suitable for disposal is achieved. The solids are then removed by a front-end loader into trucks for transport to a disposal site.

If the water byproduct residuals managed in the ponds are determined to be hazardous waste, these ponds are subject to compliance with the hazardous waste regulations for surface impoundments. These regulations specify that the impoundments must be triple-lined with a synthetic flexible membrane liner and a composite double liner. Although there are no federal requirements specifying the design for ponds containing nonhazardous waste at this time, regulations regarding nonhazardous waste in ponds may be enacted in the future. Therefore, good engineering practice suggests that at a minimum a synthetic liner should be included in the design of the pond.

8.2 TECHNOLOGY APPLICABILITY

Evaporation ponds are used primarily for treatment of waste brines generated by ion exchange and reverse osmosis processes. These treatment methods produce large volume waste streams with high dissolved solids concentrations that make other nonmechanical and all mechanical treatment methods impractical.

Evaporation ponds dewater brine solutions quickly with few operation and maintenance requirements; however, evaporation ponds can only be used in areas of the country with favorable climatic conditions, such as high temperatures, low humidity, and low precipitation. Waste brines from ion exchange and reverse osmosis require no pretreatment and are piped directly from the treatment plant. Evaporation ponds accommodate batch or continuous loadings and eliminate the need for equalization/holding tanks. In addition, ponds treating wastes with low TDS concentrations will operate for several years before solids accumulation necessitates removal.

8.3 TECHNOLOGY LIMITATIONS

Several factors limit the applicability of evaporation ponds as a sludge dewatering option. Evaporation is a land intensive treatment requiring shallow basins with large surface areas.

The high volumes of waste brines generated by membrane treatment processes make land availability an important consideration. Since reverse osmosis generates large reject volumes, the land requirements increase, which in turn, increase the cost. Consequently, evaporation becomes impractical for most reverse osmosis treatment plants.

There is also a limitation on how small a pond can be sized. This limitation is due to that the pond is an engineered excavation rather than simply a hole dug in the ground. To maintain and construct the side slopes of the pond, the bottom surface area must be a minimum size to accommodate the equipment used.

Local climatic conditions are also important factors in determining the applicability of evaporation. Climatic conditions primarily affect evaporation rates. A regional comparison of the mean annual evaporation and mean annual precipitation indicates that the northeast, southeast, Great Lakes, and coastal northwest regions of the United States have low, net annual evaporations and are unsuitable for evaporation ponds. In addition, evaporation ponds are generally considered unsuitable for alum and lime softening sludges.

8.4 COST COMPONENTS

The following section presents the design assumptions, capital components, and the operation and maintenance components used to prepare the costs for this technology.

8.4.1 Design Assumptions

- The evaporation pond is used for treatment of ion exchange or reverse osmosis brines. The influent solids concentration ranges from 1.5 to 3.5 percent by weight.

- Waste brines flow from the treatment plant to the evaporation pond by gravity or by the pressure from the treatment system via 750 to 7,500 feet of schedule 40 PVC piping. Pipe diameters range from 2 to 8 inches.

- Waste brine flow rates range from 200 to 500,000 gallons per day (gpd). Although small system ion exchange units generate less than 200 gpd, the ponds cannot be constructed to engineering specifications at sizes less than 200 gpd. In addition, waste brine flow rates from some small system reverse osmosis plants may exceed 500,000 gpd; however, the land requirements become prohibitive at sizes over 500,000 gpd.

- The pond is designed for a geographical region with a net annual evaporation rate of at least 45 inches per year.

- The pond has no outlet.

- The earthen berm has two and one-half to one (2.5:1) side slopes and two feet of free board.

- Soils cut from the excavation of the basin are used to construct the berm.

- The pond is constructed with a synthetic membrane liner and a geotextile support fabric; one foot of sand is placed on top of the liner.

- Piping from the treatment process is sized to discharge waste brines to the ponds as they are generated.

- The evaporation ponds are sized with sufficient surface area to evaporate the average daily flow. The pond depth is two feet to provide solids storage volume and to accommodate peak flows.

8.4.2 Capital Components

The capital components for each evaporation pond consist of the following items:

- Evaporation ponds;
- Piping and fittings;
- Pumps;
- Land clearing; and
- Instrumentation.

Table 14 indicates the brine volumes, number of ponds, and the total required surface area used to develop the capital cost equation for evaporation ponds.

TABLE 14

EVAPORATION PONDS

Brine Volume (gal/day)	Number of Ponds	Total Surface Area (acres)
200	1	0.06
400	2	0.12
1,000	2	0.30
10,000	2	3
50,000	2	15
100,000	2	30
200,000	4	60
400,000	6	120
500,000	3	150

8.4.3 Operation and Maintenance Components

The operation and maintenance components for each evaporation pond include the following items:

- Labor;
- Maintenance labor and materials; and
- Insurance and general and administration.

8.4.4 Cost Components Excluded

The following cost components are not included in the cost equations for evaporation ponds:

- Solids removal from the pond; and
- Dewatered sludge disposal

Costs for sludge disposal are included in other sections of this document.

8.5 COST EQUATIONS

The cost equations for the capital components and for operation and maintenance were developed by estimating the costs for seven different brine flow rates. The capital cost equation calculates the total capital cost (i.e., installed capital plus indirect capital cost). The total annual cost is calculated from the capital and operation and maintenance costs obtained using the equations presented below.

Capital Cost

$$Y = [139\ X^{0.85}] + [(7.52 \times 10^{-4}\ X^{0.93})\ Z]$$

$$Y = [\text{Equipment Cost}] + [\text{Land Cost}]$$

Where: Y = $
X = gallons of brine per day
Z = land cost in dollars per acre (e.g., $1,000/acre)

Note: For systems less than 1,000 gallons of brine per day, ½ acre of land is required.

Range: 200 gpd $\leq X \leq$ 50,000 gpd

$$Y = [16\ X^{1.05}] + [(4.08 \times 10^{-4}\ X^{0.98})\ Z]$$

$$Y = [\text{Equipment Cost}] + [\text{Land Cost}]$$

Where: Y = $
X = gallons of brine per day
Z = land cost in dollars per acre (e.g., $1,000/acre)

Range: 50,000 gpd $< X \leq$ 500,000 gpd

Operation and Maintenance

$$Y = 66\ X^{0.61}$$

Where: Y = $/year
X = gallons of brine per day

Range: 200 gpd ≤ X ≤ 50,000 gpd

$$Y = 0.71\ X^{1.04}$$

Where: Y = $/year
X = gallons of brine per day

Range: 50,000 gpd < X ≤ 500,000 gpd

Total Annual Cost

$$Y = [CAP \times CRF] + O\&M$$

Where: Y = $/year
CAP = capital cost
CRF = capital recovery factor (e.g., 0.1175)
O&M = operation and maintenance cost

9.0 POTW DISCHARGE

9.1 TECHNOLOGY DESCRIPTION

Sludges, slurries, and brines generated from the treatment of drinking water are, in some cases, discharged directly to publicly owned treatment works (POTW) for treatment and disposal. This byproduct disposal technique is used most often where the water treatment facility and the POTW are under the same management authority. The water treatment byproducts are most often discharged to the POTW via the sewer system, but small volumes may be stored on site and delivered to the POTW in a tanker truck. For each water treatment facility, a conveyance system is required to access the sanitary sewer system if an adequate system is not already in place. Installation of this system includes piping, pipe fittings, and trenching.

The piping required to carry the byproduct stream to the outfall is the primary capital cost associated with this treatment method. Polyvinyl chloride (PVC) piping is normally chosen for its low cost and corrosion resistance. Pipe diameter is determined based on the maximum expected flow and acceptable head losses. Washout points are necessary at all low points in the discharge line to prevent clogging by accumulated sediments. Gate valves are necessary at regular intervals to control waste stream flow in the event of a pipe burst. In areas of winter frost, the pipe must be laid sufficiently below grade to prevent winter freezing.

Additional costs for treating waste in a POTW include any charges imposed by the municipality for use of the sewer system (e.g., lift stations, piping network), basic fees charged by the POTW, and any strength surcharges based on excessive total suspended solids (TSS) and chemical oxygen demand (COD) in the waste stream. Most small communities have not developed charges for excess TSS and COD in wastewater since there is not significant industry in many of these towns. Many communities charge flat rate fees instead of charges based on waste volumes. In addition, some communities do not charge water

treatment plants for wastes sent to the POTW facility since they are part of the same entity.

9.2 TECHNOLOGY APPLICABILITY

Discharge into sanitary sewers is a common method of disposing water treatment byproducts including brines and filter backwash. Alum coagulant and lime sludges also may be discharged to a POTW under certain conditions. The ability of the wastewater treatment plant to accept the increased hydraulic and solids loading must be considered when determining if POTW discharge is an appropriate disposal method. In addition, the capacity of the sewer to handle the flow rates and solids content of the waste must be considered. The sewer must maintain a sufficient flow velocity to prevent solids deposition.

In some cases, chemicals in the water treatment byproducts will actually aid in the treatment of wastewaters at the POTW by acting as a settling agent. In other cases, the solids content or other constituents in the byproducts may hinder the wastewater treatment process and add to the sludge disposal problem at the POTW. A thorough analysis of byproduct constituents and volumes is required prior to selection of a POTW as a treatment and disposal option.

9.3 TECHNOLOGY LIMITATIONS

Discharging lime softening sludges to a POTW is normally not recommended due to the dramatic increase in loading to the sludge handling system at the POTW. The disposal of waste brines from the ion exchange and reverse osmosis process is a viable option if the concentrated waste does not adversely affect the sewage treatment process and if the volumes are not excessive in comparison to the POTW capacity.

Disposal of alum sludges via a sewer is not used frequently. The high solids content of alum sludges and the elevated concentrations of aluminum interfere with the wastewater treatment processes. Some POTW refuse to accept alum sludges due to high solids content of the

sludge, high aluminum concentrations, and intermittent flows. The POTWs that accept alum sludges often charge higher rates to accept these wastes.

POTW surcharges for disposal to the sewer system substantially increase the cost of this disposal method. POTW charges vary from a flat rate of several dollars per month to $4.50 per thousand gallons discharged. Appendix A presents POTW charges used to determine a typical POTW charge for this document.

In all cases, the water treatment plant must have or be able to gain access to a sanitary sewer line or have convenient truck access. Many communities, especially with populations under 500, do not maintain POTW facilities. The POTW must be designed with adequate capacity to manage the water treatment waste and specific contaminant levels must not exceed concentration levels specified in the POTW use permit.

9.4 COST COMPONENTS

The following section presents the design assumptions, capital components, and the operation and maintenance components used to prepare the costs for this technology.

9.4.1 Design Assumptions

- The byproduct stream flows by gravity or under pressure from the treatment process via PVC piping to the sewer line.
- Byproduct flow rates range from 100 to 1,000,000 gallons per day depending on the water treatment technology.
- The sewer line connection is 500 feet or 1,000 feet from the water treatment system.
- Two-inch minimum diameter pipe is used to prevent clogging. Pipe diameters range from 2 to 6 inches. Schedule 40 PVC pipe is used.

- Holding tanks and lagoons are not required for small water treatment systems.
- Costs are for discharge of brines and slurries and do not include TSS or BOD surcharges.

9.4.2 Capital Components

The capital components for each POTW discharge system consist of the following items:

- Piping and fittings;
- Trenching; and
- Land clearing.

Table 15 indicates the brine volumes and pipe diameters used to develop the capital cost equation for the POTW systems.

TABLE 15

POTW DISCHARGE

Byproduct Flow Rate (gal/day)	Pipe Diameter (inches)
160	2
330	2
1,010	2
2,440	2
3,930	2
12,200	2
29,380	2
67,500	2
162,500	3
500,000	4
750,000	6
1,000,000	6

9.4.3 Operation and Maintenance Components

The operation and maintenance components for each POTW discharge system include the following items:

- Labor; and
- Basic POTW charges.

No maintenance requirements are assumed for this technology.

9.4.4 Cost Components Excluded

The following cost components are not included in the cost equations for POTW discharge systems:

- Any fees charged by the POTW for the initial connection; and
- Land cost.

It is assumed the water treatment facility would be able to gain access for piping via an easement.

9.5 COST EQUATIONS

The cost equations for the capital components and operation and maintenance were developed by estimating the costs for 12 different brine flow rates. The capital cost equation calculates the total capital cost (i.e., installed capital plus indirect capital costs). The total annual cost is calculated from the capital and operation and maintenance costs obtained using the equations presented below.

9.5.1 500 Feet of Discharge Pipe

<u>Capital Costs</u>

Y = $3,500

Where: $Y = \$$
X = gallons of brine per day

Range: $100 \text{ gpd} \leq X \leq 150{,}000 \text{ gpd}$

$$Y = 2{,}700 + 3.1\, X^{0.50}$$

Where: $Y = \$$
X = gallons of brine per day

Range: $150{,}000 \text{ gpd} < X \leq 1{,}000{,}000 \text{ gpd}$

Operation and Maintenance

$$Y = [375] + [(1.83 \times 10^{-3})\, 365\, X]$$

$$Y = [\text{Operating Costs}] + [\text{POTW Charges}]$$

Where: $Y = \$/\text{year}$
X = gallons of brine per day
(1.83×10^{-3} = POTW volume charge)

Range: $100 \text{ gpd} \leq X < 1{,}000{,}000 \text{ gpd}$

Total Annual Cost

$$Y = [\text{CAP} \times \text{CRF}] + \text{O\&M}$$

Where: $Y = \$/\text{year}$
CAP = capital cost
CRF = capital recovery factor (e.g., 0.1175)
O&M = operation and maintenance cost

9.5.2 1,000 Feet of Discharge Pipe

Capital Costs

$$Y = 7{,}400$$

Where: $Y = \$$
X = gallons of brine per day

Range: $100 \text{ gpd} \leq X \leq 150{,}000 \text{ gpd}$

$$Y = 4{,}800 + 6.7\,X^{0.50}$$

Where: $Y = \$$
X = gallons of brine per day

Range: $150{,}000 \text{ gpd} < X \leq 1{,}000{,}000 \text{ gpd}$

Operation and Maintenance

$$Y = [375] + [(1.83 \times 10^{-3})\ 365\ X]$$

$$Y = [\text{Operating Costs}] + [\text{POTW Charges}]$$

Where: $Y = \$/\text{year}$
X = gallons of brine per day
(1.83×10^{-3} = POTW volume charge)

Range: $100 \text{ gpd} \leq X < 1{,}000{,}000 \text{ gpd}$

Total Annual Cost

$$Y = [\text{CAP} \times \text{CRF}] + \text{O\&M}$$

Where: $Y = \$/\text{year}$
CAP = capital cost
CRF = capital recovery factor (e.g., 0.1175)
O&M = operation and maintenance cost

10.0 DIRECT DISCHARGE

10.1 TECHNOLOGY DESCRIPTION

Directly discharging water treatment byproducts into surface water is a common sludge, slurry, and brine disposal method. The technology involves piping the waste stream from the water plant to a receiving body of water such as a river, lake or ocean. Pumping, gravity or, in the case of reverse osmosis, pressure from the treatment plant provides the force necessary to carry the byproduct to the receiving waters. No pretreatment or concentration of the byproduct stream is necessary prior to discharge. The receiving waters dilute the waste concentration and gradually incorporate the sludge or brine.

The piping required to carry the byproduct stream to the outfall is the primary capital cost associated with this treatment method. Polyvinyl chloride (PVC) piping is normally chosen for its low cost and corrosion resistance. Pipe diameter is determined based on the maximum expected flow and acceptable head losses. Washout points are necessary at all low points in the discharge line to prevent clogging by accumulated sediments. Gate valves are necessary at regular intervals to control waste stream flow in the event of a pipe burst. In areas of winter frost, the pipe must be laid sufficiently below grade to prevent winter freezing.

An equalization/holding tank is optional in instances where reverse osmosis is used as the water treatment system. It serves several purposes when disposing of treatment wastes by direct discharge. First, the tank reduces the necessary discharge piping diameter by allowing wastes to be continuously discharged at a lower flow rate. Second, the tank reduces the variations in the quality of the discharged wastes by mixing the wastes generated over a period of time. Third, the tank provides emergency storage when discharge is not possible. The size of the holding/equalization tank will depend on the byproduct volumes and the required number of days of storage.

10.2 TECHNOLOGY APPLICABILITY

Direct discharge can be used for small water treatment systems where little oversight is available. The level of operator experience and maintenance required is minimal. This method has been used to dispose of alum and lime sludges and brines generated by reverse osmosis and ion exchange treatment methods. Generally, there is no treatment of the solids in sludge or brine prior to discharge. Direct discharge requires the lowest level of oversight and maintenance of all the treatment/disposal methods presented in this document.

10.3 TECHNOLOGY LIMITATIONS

The primary limitations of direct discharge of water treatment plant byproducts are federal, state, and local regulations. The discharge of waste into surface water is regulated by the Clean Water Act. Water treatment plants are required to obtain a National Pollutant Discharge Elimination System (NPDES) permit. Some states require toxicity testing of wastewaters as part of their NPDES programs. Reverse osmosis brines may be acutely or chronically toxic to aquatic life. In these cases, direct discharge of untreated wastewater should not be practiced.

A second limitation is that the byproducts can potentially have a negative effect upon the quality of water in the receiving body. In receiving waters with low velocities, discharged sludges will collect around the outfall. The accumulation of sludges and sediments can greatly alter the local water quality and create an area of anaerobic activity with lower water pH and odor problems. In addition, sudden increases in water volume and velocity can resuspend settled solids and shock load the receiving waters.

Several studies have investigated the toxicity of aluminum release by alum sludges in receiving waters. The studies indicate a trend of higher trout mortality rates in waters with higher aluminum concentrations and a negative impact on phytoplankton productivity.

10.4 COST COMPONENTS

The following section presents the design assumptions, capital components, and the operation and maintenance components used to prepare the costs for this technology.

10.4.1 Design Assumptions

- Byproduct flow rates range from 100 to 1,000,000 gallons per day depending on the water system technology.
- The point of discharge is 500 feet or 1,000 feet from the water treatment system.
- Two-inch minimum diameter pipe is used to prevent clogging. Pipe diameters range from 2 to 6 inches.
- Schedule 40 PVC pipe is used.
- A 1- to 2-day storage tank or lagoon is optional.

10.4.2 Capital Components

The capital components for each direct discharge system consist of the following items:

- Piping and fittings;
- Trenching; and
- Land clearing.

In addition, a pump, holding tank or lagoon, electrical, and instrumentation are added for the direct discharge option with a holding tank or lagoon.

Table 16 indicates the brine volumes, pipe diameters, and tank/lagoon capacities used to develop the capital cost equation for direct discharge.

TABLE 16

DIRECT DISCHARGE

Byproduct Flow Rate (gal/day)	Pipe Diameter (inches)	Tank or Lagoon Capacity
160	2	500-gallon tank
330	2	1,000-gallon tank
1,010	2	2,000-gallon tank
2,440	2	5,000-gallon tank
3,930	2	8,000-gallon tank
12,200	2	25,000-gallon lagoon
29,380	2	50,000-gallon lagoon
67,500	2	115,000-gallon lagoon
162,500	3	330,000-gallon lagoon
500,000	4	750,000-gallon lagoon
750,000	6	1,125,000-gallon lagoon
1,000,000	6	1,500,000-gallon lagoon

10.4.3 Operation and Maintenance Components

The operation and maintenance components for a direct discharge system with no holding tank includes labor. No maintenance requirements are assumed for this technology. The operation and maintenance components for direct discharge with a holding tank or lagoon include the following items:

- Electricity;
- Labor;
- Maintenance labor and materials; and
- Insurance and general and administration.

10.4.4 Cost Components Excluded

The following cost components are not included in the cost equations for direct discharge systems:

- NPDES permit application and monitoring costs; and
- Land cost.

It is assumed the water treatment facility would be able to gain access for piping via an easement.

10.5 COST EQUATIONS

The cost equations for the capital components and operation and maintenance were developed by estimating the costs for 12 different brine flow rates. The capital cost equation calculates the total capital cost (i.e., installed capital plus indirect capital costs). The total annual cost is calculated from the capital and operation and maintenance costs obtained using the equations presented below.

10.5.1 500 Feet of Discharge Pipe

<u>Capital Costs</u>

$$Y = 3{,}500$$

Where: $Y = \$$
X = gallons of brine per day

Range: $100 \text{ gpd} \leq X < 150{,}000 \text{ gpd}$

$$Y = 2{,}700 + 3.1\, X^{0.50}$$

Where: $Y = \$$
X = gallons of brine per day

Range: 150,000 gpd ≤ X ≤ 1,000,000 gpd

Operation and Maintenance

$Y = 375$

Where: Y = $/year
X = gallons of brine per day

Range: 100 gpd ≤ X < 1,000,000 gpd

Total Annual Cost

$Y = [CAP \times CRF] + O\&M$

Where: Y = $/year
CAP = capital cost
CRF = capital recovery factor (e.g., 0.1175)
O&M = operation and maintenance cost

10.5.2 1,000 Feet of Discharge Pipe

Capital Cost

$Y = 7{,}400$

Where: Y = $
X = gallons of brine per day

Range: 100 gpd ≤ X ≤ 150,000 gpd

$Y = 4{,}800 + 6.7\,X^{0.50}$

Where: Y = $
X = gallons of brine per day

Range: 150,000 gpd < X ≤ 1,000,000 gpd

Operation and Maintenance

$Y = 375$

Where: Y = \$/year
X = gallons of brine per day

Range: $100 \text{ gpd} \leq X < 1{,}000{,}000 \text{ gpd}$

Total Annual Cost

$Y = [CAP \times CRF] + O\&M$

Where: Y = \$/year
CAP = capital cost
CRF = capital recovery factor (e.g., 0.1175)
O&M = operation and maintenance cost

10.5.3 500 Feet of Discharge Pipe with a Holding Tank or Lagoon

Capital Costs

$Y = 5{,}000 + 75.4\, X^{0.50}$

Y = Equipment Cost

Where: Y = \$
X = gallons of brine per day

Range: $100 \text{ gpd} \leq X \leq 12{,}000 \text{ gpd}$

$Y = [14{,}400 + 9.46 \times 10^{-2}\, X] + [0.5\, Z]$

Y = [Equipment Cost] + [Land Cost]

Where: Y = \$
X = gallons of brine per day
Z = land cost in dollars per acre (e.g., \$1000/acre)

Range: 12,000 gpd < X ≤ 1,000,000 gpd

Operation and Maintenance

$$Y = 1{,}000 + 0.13\,X$$

Where: Y = $/year
X = gallons of brine per day

Range: 100 gpd ≤ X ≤ 12,000 gpd

$$Y = 2{,}600 + 1.44 \times 10^{-2}\,X$$

Where: Y = $/year
X = gallons of brine per day

Range: 12,000 gpd < X ≤ 1,000,000 gpd

Total Annual Cost

$$Y = [CAP \times CRF] + O\&M$$

Where: Y = $/year
CAP = capital cost
CRF = capital recovery factor (e.g., 0.1175)
O&M = operation and maintenance cost

10.5.4 1,000 Feet of Discharge Pipe with a Holding Tank or Lagoon

Capital Cost

$$Y = 8{,}600 + 75.4\,X^{0.50}$$

Where: Y = $
X = gallons of brine per day

Range: 100 gpd ≤ X ≤ 12,000 gpd

$$Y = [17{,}800 + 9.70 \times 10^{-2} X] + [0.5 Z]$$

$$Y = [\text{Equipment Cost}] + [\text{Land Cost}]$$

Where: Y = $
X = gallons of brine per day
Z = land cost in dollars per acre (e.g., $1000/acre)

Range: 12,000 gpd < X ≤ 1,000,000 gpd

Operation and Maintenance

$$Y = 1{,}000 + 0.13 X$$

Where: Y = $/year
X = gallons of brine per day

Range: 100 gpd ≤ X ≤ 12,000 gpd

$$Y = 2{,}600 + 1.44 \times 10^{-2} X$$

Where: Y = $/year
X = gallons of brine per day

Range: 12,000 gpd < X ≤ 500,000 gpd

Total Annual Cost

$$Y = [CAP \times CRF] + O\&M$$

Where: Y = $/year
CAP = capital cost
CRF = capital recovery factor (e.g., 0.1175)
O&M = operation and maintenance cost

11.0 FRENCH DRAINS

11.1 TECHNOLOGY DESCRIPTION

French drains are a type of drainfield similar to a residential septic system used for waste disposal. A distribution box discharges the effluent into a system of gravel-filled trenches, known as a drainfield. French drains are constructed trenches or beds. A trench is typically 18 inches to three feet wide and a bed is 3 to 25 feet wide. Both trenches and beds have a maximum length of 100 feet and are 1 to 2 feet deep. The beds contain ¾-inch to 2¼-inch gravel. Effluent runs through the pore spaces in the gravel and eventually percolates into the surrounding soil. The size of the drainfield depends on the daily flow rates of wastewater, the percolation rate of surrounding soil, and the depth to ground water.

Drainfields are part of a septic-type system. In this system, wastewater flows to a distribution box. The distribution box has up to nine outlets and each outlet leads to a gravel bed. Wastewater flows through the outlets and into the drainfield trenches. As effluent percolates into the surrounding soil, the water quality of the effluent is improved by physical, chemical, and biological interactions with the soil.

11.2 TECHNOLOGY APPLICABILITY

French drains are a disposal option for water treatment brines. Although there is theoretically no limit to the amount of byproducts that can be discharged into these systems, drainfields are usually limited to flows of 10,000 gallons per day. Higher flows can overload a system causing drainfield failure and creating a ground water mound. These failures allow untreated effluent into the surrounding soils and the ground water. French drains are preferred in some areas because the drainfield needs less square footage than a standard drainfield with perforated pipes. French drains are a versatile disposal option for

small daily flows since they can be used in almost all climates and can be modified to be effective with varying soil types.

11.3 TECHNOLOGY LIMITATIONS

Several factors limit the use of french drains. They are designed to handle the brines from reverse osmosis or ion exchange; alum and lime sludges cannot be disposed via french drains. Systems are generally limited to discharge flows of less than 10,000 gallons per day because of the area needed for the drainfield. Higher daily flows make the system an inefficient method of byproduct treatment due to problems such as overloading the drainfield and elevated ground water levels. In addition, *french drains are illegal in some states*.

11.4 COST COMPONENTS

The following section presents the design assumptions, capital components, and the operation and maintenance components used to prepare the costs for this technology.

11.4.1 Design Assumptions

- The soil has a moderate percolation rate of 10 minutes per inch.
- The system is gravity fed.
- The maximum bed size is 100 feet in length and 25 feet wide with 10 feet between beds.

11.4.2 Capital Components

The capital components for each french drain system consist of the following items:

- Earthwork;
- Gravel drainfield beds;
- Piping; and
- Land.

11.4.3 Operation and Maintenance Components

The operation and maintenance components for each french drain system includes labor to inspect the french drain system. No maintenance requirements are assumed for this technology.

11.4.4 Cost Components Excluded

The following cost components are not included in the cost equations for french drain systems:

- Collection and laboratory analysis of drainfield soil samples;
- System maintenance, if necessary; and
- Cost of boreholes for percolation test.

11.5 COST EQUATIONS

The cost equations for the capital components and operation and maintenance were developed by estimating the costs for five different brine flow rates. The capital cost equation calculates the total capital cost (i.e., installed capital plus indirect capital costs). Equipment costs and land costs are separate components in the capital cost equation to enable the user to exclude the cost for purchasing land if it is not necessary. The total annual cost is calculated based on the capital and operation and maintenance costs obtained using the equations presented below.

<u>Capital Cost</u>

$$Y = [2{,}600 + 2.92\ X] + [0.5\ Z]$$

$$Y = [\text{Equipment Cost}] + [\text{Land Cost}]$$

Where: Y = $
X = gallons of brine per day
Z = land cost in dollars per acre (e.g., $1,000 per acre)

Range: 100 gpd $\leq$ X $\leq$ 2,000 gpd

$$Y = [100 + 3.96\ X] + [0.75\ Z]$$

$$Y = [\text{Equipment Cost}] + [\text{Land Cost}]$$

Where: Y = $
X = gallons of brine per day
Z = land cost in dollars per acre (e.g., $1,000 per acre)

Range: 7,000 gpd < X $\leq$ 10,000 gpd

Operation and Maintenance

$$Y = 375$$

Where: Y = $/year

Range: 100 gpd $\leq$ X $\leq$ 10,000 gpd

Total Annual Cost

$$Y = [CAP \times CRF] + O\&M$$

Where: Y = $/year
CAP = capital cost
CRF = capital recovery factor (e.g., 0.1175)
O&M = operation and maintenance cost

12.0 LAND APPLICATION

Land application can be used to dispose of liquid and sludge/slurry wastes. Two land application systems are included in this analysis: a sprinkler system for liquid waste and transport off site for application via a specially equipped tanker truck. A general description of land application, its applicability, and limitations is presented below. Separate cost information is presented for land application of liquid and sludge byproducts.

12.1 TECHNOLOGY DESCRIPTION

Land application disposes water treatment byproducts by applying them directly to land surfaces. In general, liquid sludges contain less than 15 percent solids. Liquid, pumpable, sludge can be applied to land surfaces via spraying from a truck or sprinkler system, injected into the subsurface, or discharged directly to a selected land application field. Dewatered sludge is applied by spreading the solid material over the land surface. Sludge application is dependent on several variables, such as the crop planted in the application field and the chemistry of the soil and sludge.

Liquid sludge can be applied to a selected land application field using various methods. Once on the field, the sludge is treated by infiltration or overland flow, improving water quality by physical, chemical, and biological interactions with the soil. During infiltration, liquid sludge is allowed to percolate into the soils. Slow infiltration is used with moderately permeable soils and the sludge is applied with sprinklers. Rapid infiltration is used with deep and highly permeable soils, such as sands. Liquid sludge is fed continually into a shallow basin during an application period, which may vary between several hours to several weeks, depending on the volume of liquid sludge. Both infiltration systems also can use underdrainage. Underdrainage is a system of buried pipes that captures effluent for reuse or discharge into a receiving body of water; underdrainage minimizes ground water contamination and subsurface flow of

leachate to adjacent properties. Overland flow is used in areas with low permeability soils. Sludge is applied at the top of a slope and runs overland; runoff ditches collect the effluent for reuse or discharge.

Liquid sludge can be applied by surface spraying or subsurface injection. If the application field is near the waste-generating plant or storage lagoon, a sprinkler system can be used to spray liquid sludge from the lagoon. If a remote application field is used, sludge must be transported to the disposal site in a truck. The transport truck or a tanker truck may be used to apply the sludge or may be used strictly for transport. If a tanker truck is used, the sludge must be transferred to another specialized vehicle for application. Depending on the type of vehicle, the sludge can be applied by spraying or subsurface injection.

Dewatered sludges are stored on site until they are transported to a disposal site. At the land application field, the sludge is spread by a truck and tilled into the soil by a tractor.

Monitoring of soils, run off from land application, and potentially affected water resources may be advisable to protect open land that may become cropland and to protect local water quality. Monitoring soils for metals and/or radionuclides may be required by state and other agencies.

12.2 TECHNOLOGY APPLICABILITY

Land application of liquid and dewatered sludges provides final disposal for lime and, to some degree, alum sludges. The acceptability of land application is increasing and it is gaining in popularity as a disposal method due to increased regulatory controls associated with other disposal methods. Lime sludges can be used in farmland to neutralize soil pH in place of commercial products. Non-food chain crops, mine reclamation areas, and forests are preferred vegetation for sludge application. Alum sludges do not benefit the soil matrix and should be used as fill material.

Farmers may be reluctant to allow spreading of sludges on their fields. If farmers are willing to use sludge, the application of sludge is seasonal, usually in the spring; however, sludges are produced year round. Seasonal weather conditions also affect sludge application. In northern areas, sludge application is limited to warmer months when applications can infiltrate soils or the sludge can be injected into soils. Where the ground is frozen or covered with snow for part of the year or applied to farmland, sludge is stockpiled until soil conditions are appropriate for land application.

12.3 TECHNOLOGY LIMITATIONS

There are numerous limitations to land application of sludges including chemical alteration of the soil, seasonal conditions, and proximity of available land. Land application is not appropriate for brines and is limited for sludges. If radionuclides are present, land application may not be appropriate. Regulated levels of radionuclides vary from state to state and water suppliers should contact their radiation and drinking water authorities to obtain state-specific information.

Land application for alum sludge is limited. Alum sludge contributes little to soil conditioning, and may actually harm soil nutrient balances. Studies indicate that alum sludges fix phosphorous in the soil, preventing uptake of phosphorous in plants.

Application of any sludge to the land may introduce trace metals to the soil. The application lifetime of a site is limited to when one of the trace metals reaches the maximum allowable concentration. Due to the possibility of trace metal absorption by vegetation, non-food chain crop fields are preferred for land application.

Land application also is limited to areas where agricultural land, grassland, or forested land is available nearby, since transportation costs to remote disposal areas increase substantially with distance.

12.4 LIQUID SLUDGE LAND APPLICATION COST COMPONENTS

The following section presents the design assumptions, capital components, and the operation and maintenance components used to prepare the costs for this technology.

12.4.1 Design Assumptions

- The storage lagoon is constructed with a synthetic membrane liner, overlain by 12 inches of sand.
- The applied sludge consists of lime or alum sludge.
- The water plant is 500 feet from the storage lagoon; the sludge is gravity-fed to the lagoon.
- The lagoons are sized for 6-month storage except for the 130 gallons per day system, which has storage capacity for one year.
- The application field is cultivated farmland. The farmer uses a personally-owned tractor and fuel to till the land following the sludge application.

Application By Truck:

- The sludge is applied twice per year (spring and fall) except for the 130 gallons per day system. Sludge is applied once per year for 130 gallons per day system.
- The sludge application is 1 inch thick.

Application By Sprinkler:

- The land application rate is ¼ inch per day.
- The sprinkler system is a portable system with all piping above ground.
- The sprinkler system has a radius of 50 feet.

12.4.2 Capital Components

The capital components for each land application consist of the following items:

- Storage lagoon;
- Piping;
- Land;
- Electrical; and
- Sprinkler system, when appropriate.

Table 17 indicates the sludge volume and pond surface areas used to develop the capital cost equation for the land application systems.

TABLE 17

LIQUID SLUDGE LAND APPLICATION

Sludge Volume (gal/day)	Pond Surface Area (acres)
130	0.05
1,000	0.15
5,000	0.53
10,000	0.92

12.4.3 Operation and Maintenance Components

The operation and maintenance components for land application include the following items:

- Electricity;
- Labor;
- Sludge removal from storage pond;
- Maintenance labor and materials;
- Insurance and general and administration; and
- Transportation and land application fees, when appropriate.

12.4.4 Cost Components Excluded

Costs for incorporation of the liquid sludge into the soil, if necessary, are not included in the cost equations for liquid sludge.

12.5 LIQUID SLUDGE LAND APPLICATION COST EQUATIONS

The cost equations for the capital components and operation and maintenance were developed by estimating the costs for four different sludge flow rates. The capital cost equation calculates the total capital cost (i.e., installed capital plus indirect capital costs). Equipment costs and land costs are separate components in the capital cost equation to enable the user to exclude the cost for purchasing land if it is not necessary. The total annual cost is calculated based on the capital and operation and maintenance costs obtained using the equations presented below.

12.5.1 Sprinkler System

<u>Capital Cost</u>

$$Y = [17{,}700 + 14.7\,X] + [(0.2 + 7.0 \times 10^{-3}\,X^{0.50})\,Z] + [(0.2 + 2.7 \times 10^{-4}\,X)\,Z]$$

$$Y = [\text{Equipment Cost}] + [\text{Pond Land Cost}] + [\text{Application Field Cost}]$$

Where: Y = $
X = gallons of sludge per day
Z = land cost in dollars per acre (e.g., $1,000/acre)

Note: for sludge flow rates ≤ 1,000 gpd, the total land requirement is 0.5 acre

Range: 100 gpd ≤ X ≤ 10,000 gpd

Operation and Maintenance

$$Y = 1{,}200 + 0.85\,X$$

Where: Y = \$/year
X = gallons of sludge per day

Range: 100 gpd $\leq X \leq$ 10,000 gpd

Total Annual Cost

$$Y = [CAP \times CRF] + O\&M$$

Where: Y = \$/year
CAP = capital cost
CRF = capital recovery factor (e.g., 0.1175)
O&M = operation and maintenance cost

12.5.2 Trucking System

Capital Cost

$$Y = [15{,}200 + 13.9\,X] + [0.2 + 7.0 \times 10^{-3}\,X^{0.50})\,Z]$$

$$Y = [\text{Equipment Cost}] + [\text{Land Cost}]$$

Where: Y = \$
X = gallons of sludge per day
Z = land cost in dollars per acre (e.g., \$1,000/acre)

Range: 100 gpd $\leq X \leq$ 10,000 gpd

Operation and Maintenance

$$Y = 1{,}100 + 11.8\,X$$

Where: Y = \$/year
X = gallons of sludge per day

Range: 100 gpd $\leq$ X $\leq$ 10,000 gpd

Total Annual Cost

$$Y = [CAP \times CRF] + O\&M$$

Where:
Y = $/year
CAP = capital cost
CRF = capital recovery factor (e.g., 0.1175)
O&M = operation and maintenance cost

12.6 DEWATERED SLUDGE LAND APPLICATION COST COMPONENTS

12.6.1 Design Assumptions

- The sludge is stockpiled on site.
- The sludge is transported off site for land application.
- A front-end loader is used to load sludge for transport. The front-end loader is owned by the water treatment plant.
- The application field is within 25 miles of the plant.
- The application field is agricultural; the farmer growing crops on the field uses a personally-owned tractor and fuel to till the sludge into soil.
- The application rate is two dry tons of sludge per acre.

12.6.2 Capital Components

The capital components for dewatered sludge land application consist of the following items:

- Land for sludge stockpile; and
- Land clearing.

12.6.3 Operation and Maintenance Components

The operation and maintenance components for each dewatered sludge land application include the following items:

- Labor;
- Sludge loading; and
- Transportation and land application fees.

12.6.4 Cost Components Excluded

Costs for incorporation of the dewatered sludge into the soil, if necessary, are not included in the cost equations for dewatered sludge.

12.7 DEWATERED SLUDGE LAND APPLICATION COST EQUATIONS

The cost equations for the capital components and operation and maintenance were developed by estimating the costs for four different sludge flow rates. The capital cost equation calculates the total capital cost (i.e., installed capital plus indirect capital costs). Equipment costs and land costs are separate components in the capital cost equation to enable the user to exclude the cost for purchasing land if it is not necessary. The total annual cost is calculated based on the capital and operation and maintenance costs obtained using the equations presented below.

<u>Capital Cost</u>

$$Y = [1.45\ X^{0.87}] + [0.5\ Z]$$

$$Y = [\text{Equipment Cost}] + [\text{Land Cost}]$$

Where: Y = $
X = gallons of sludge per day
Z = land cost in dollars per day

Range: 100 gpd $\leq X \leq$ 1,000 gpd

$$Y = [1.45\ X^{0.87}] + [(0.33 + 1.6 \times 10^{-4}\ X)\ Z]$$

$$Y = [\text{Equipment Cost}] + [\text{Land Cost}]$$

Where: Y = $
X = gallons of sludge per day
Z = land cost in dollars per day

Range: 1,000 gpd $< X \leq$ 10,000 gpd

Operation and Maintenance

$$Y = 150 + 28.2\ X$$

Where: Y = $/year
X = gallons of sludge per day

Range: 100 gpd $\leq X \leq$ 10,000 gpd

Total Annual Cost

$$Y = [CAP \times CRF] + O\&M$$

Where: Y = $/year
CAP = capital cost
CRF = capital recovery factor (e.g., 0.1175)
O&M = operation and maintenance cost

13.0 NONHAZARDOUS WASTE LANDFILL

13.1 TECHNOLOGY DESCRIPTION

Nonhazardous waste landfills are used for ultimate disposal of dewatered byproduct sludges. A landfill is an area of land or an excavation in which wastes are placed for permanent disposal, and that is not a land application unit, surface impoundment, injection well, or waste pile (40 CFR Part 257.2). Two forms of nonhazardous waste landfills are commonly used to dispose of byproduct sludges: monofills and commercial nonhazardous waste landfills. Monofills are landfills that only accept one type of waste (e.g., water treatment byproducts sludges or incinerator ash). Commercial nonhazardous waste landfills accept a mix of residential and industrial wastes.

Nonhazardous waste landfills are regulated by individual states and under the Resource Conservation and Recovery Act (RCRA). Each state has specific guidelines on what types of waste can and cannot be disposed in nonhazardous waste landfills and also determines construction and operation criteria. In many cases, the state requirements are more stringent than the Federal requirements under RCRA. On October 9, 1991, the U.S. EPA promulgated new criteria for existing and future municipal solid waste landfills (56 FR 50978), a major subset of nonhazardous waste landfills. These criteria include location restrictions, operating criteria, design criteria, ground water monitoring requirements, corrective action requirements, closure and post-closure care requirements, and financial assurance. Implementation of these criteria may directly contribute to the early closure of many landfills and increase the tipping fees charged by other landfills.

13.2 TECHNOLOGY APPLICABILITY AND LIMITATIONS

The percent solids and leaching characteristics of a sludge are the two most important

characteristics in determining the applicability of disposal in a nonhazardous waste landfill. The sludge cannot contain free liquids as defined by the Paint Filter Liquids Test (SW-846, Method 9095). In this test, a representative 100 ml or 100 gram sample is placed in a conical paint filter (60 mesh) and placed on a ring stand above a graduated cylinder or beaker. If any liquid collects in the cylinder or beaker, the sludge contains free liquids and is not appropriate for landfilling. If liquid does not collect in the cylinder or beaker, the waste does not contain free liquids and can be disposed in a landfill.

In addition to passing the Paint Filter Liquids Test, the waste cannot exhibit the characteristic of toxicity as determined by the toxicity characteristic leaching procedure (TCLP) test (40 CFR Part 261, Appendix II). In the TCLP test, an extraction is performed to determine if any constituent is present in the waste leachate above the regulated concentration. If any constituents are present at concentrations greater than or equal to the TCLP limits (40 CFR Part 261.24), the waste cannot be disposed in a nonhazardous waste landfill. If constituents are not present above the toxicity characteristic (TC) regulatory level and the waste does not exhibit other characteristics of hazardous waste (i.e., ignitability, reactivity, and corrosivity), the sludge can be disposed in a nonhazardous waste landfill.

Additional sludge characteristics such as sludge specific gravity, compaction analysis, and shear properties also are important when determining the applicability of a sludge for disposal in a nonhazardous waste landfill. These characteristics determine the ease of sludge handling and the overall stability of the disposal area. In most cases, a solids content of 15–20 percent is required for landfilling, but in some cases wastes with less than 15 percent solids will be accepted for disposal.

Many water treatment facilities currently dispose of their waste in commercial or publicly owned landfills. Landfilling tends to be the most economical option for disposal of water byproduct residues. Rising landfill costs, decreasing landfill availability, and increasing environmental regulations governing waste disposal may make this option less economical.

Because the availability of landfills is decreasing and environmental regulations are increasing, there is increased emphasis on the benefits of monofills within the water industry. Generally, the costs associated with the development of a monofill are less than those associated with a municipal or industrial waste landfill. In addition, the water treatment facility limits potential liability by controlling the type of wastes disposed at a monofill.

13.3 COST COMPONENTS

The following section presents the design assumptions and cost components used to prepare the costs for this technology.

13.3.1 Design Assumptions

- A commercial nonhazardous waste landfill is used for sludge disposal.
- Transportation distance varies from 5 to 50 miles.
- There is no economy of scale for large waste volumes.
- All wastes pass the Paint Filter Liquids Test.
- The waste does not exhibit the characteristics of ignitability, corrosivity, reactivity, or toxicity.

13.3.2 Cost Components

The cost components for non-hazardous waste landfill consist of the following items:

- Commercial nonhazardous waste landfill tipping fee; and
- Transportation fees.

13.4 TOTAL ANNUAL COST EQUATION

$$Y = [35\ X] + [2.48 + 0.16\ Z]\ X$$

$$Y = [\text{Disposal}] + [\text{Transportation}]$$

Where:
- Y = $/year
- X = Tons of sludge requiring disposal per year
- Z = Transportation distance from 5 to 50 miles

14.0 HAZARDOUS WASTE LANDFILL

14.1 TECHNOLOGY DESCRIPTION

Hazardous waste landfills are used for ultimate disposal of hazardous wastes (including listed and characteristic wastes). For water treatment byproduct sludges specifically, hazardous waste landfills are used for the disposal of sludges exhibiting one or more characteristics of hazardous waste (ignitability, corrosivity, reactivity, and toxicity). A hazardous waste landfill is a disposal facility where hazardous waste is placed in or on land and which is not a waste pile, a land treatment facility, a surface impoundment, an underground injection well, a salt dome formation, a salt bed formation, an underground mine, or a cave (40 CFR Part 260.10). Hazardous waste landfills are regulated by the Federal government under RCRA or by individual states where the state has received RCRA authorization.

Hazardous waste landfills must be permitted in accordance with the hazardous waste permit regulations (40 CFR Part 270). The hazardous waste landfill regulations specify that landfills must be designed with a synthetic flexible membrane liner and composite double liner. In addition, the landfill must have a leachate collection system above the top liner and a leachate detection system between the top liner and bottom composite liner. The containment system for a hazardous waste landfill, in descending order starting with the component closest to the waste, consists of a 1-foot protective soil layer, a geotextile filter fabric, a leachate collection system (a 1-foot sand layer with drainage pipes), a 30-mil HDPE liner, a leachate detection system (a 1-foot sand layer with drainage pipes), a 30 mil-HDPE liner, and a 3-foot layer of compacted clay, which has a hydraulic conductivity $< 1 \times 10^{-7}$ cm/sec. Leachate collected from the landfill must be tested to determine if it is a hazardous waste. If the leachate is determined to be a hazardous waste, it must be managed as a hazardous waste.

14.2 TECHNOLOGY APPLICABILITY AND LIMITATIONS

The leaching characteristics and the presence of free liquids are the two most important characteristics in determining the applicability of sludge disposal in a hazardous waste landfill. Water treatment byproducts that exhibit the characteristic of ignitability, corrosivity, reactivity, or toxicity require disposal in a hazardous waste landfill. Typically, water treatment byproducts are not ignitable, reactive, or corrosive, but may exhibit the characteristic of toxicity. The TCLP test (40 CFR Part 261, Appendix II) is used to determine if wastes are toxic. In the TCLP test, the extraction is performed to determine if any constituent is present in the waste leachate above the regulated concentration. If any constituents are present at concentrations greater than or equal to the TC limits (40 CFR Part 261.24), the waste is hazardous and requires disposal in a hazardous waste landfill. If no constituents are present above the regulatory level and the waste does not exhibit other characteristics (i.e., ignitability, reactivity, and corrosivity), the sludge can be disposed in a nonhazardous waste landfill.

In addition, the sludge cannot contain free liquids as defined by the Paint Filter Liquids Test (SW-846, Method 9095). In this test, a representative 100 ml or 110 gram sample is placed in a conical paint filter (60 mesh) and placed on a ring stand above a graduated cylinder or beaker. If liquid collects in the cylinder or beaker, the sludge contains free liquids and is not appropriate for landfilling. If no liquid collects in the cylinder or beaker, the waste does not contain free liquids and can be disposed in a landfill without further dewatering. If the waste contains free liquids, it must be stabilized or treated by another method to remove free liquids prior to disposal in a landfill.

The Hazardous and Solid Waste Amendments of 1984 restrict the land disposal of untreated hazardous wastes. The land disposal restrictions for Third Third wastes (55 FR 22520) promulgated treatment standards for wastes exhibiting characteristics of hazardous waste (i.e., ignitability, corrosivity, reactivity, and toxicity) that require wastes to meet specified

concentration standards prior to land disposal. In general, for sludges exhibiting the TC characteristic, the sludges must be stabilized prior to land disposal to meet the concentration standard. Other treatment methods are acceptable as long as the waste contains TC concentrations at or below the level specified in the Third Third Final Rule prior to land disposal. The additional treatment required by the Land Disposal Restrictions Rule significantly increases the cost of hazardous waste disposal.

14.3 COST COMPONENTS

The following section presents the design assumptions and cost components used to prepare the costs for this disposal technology.

14.3.1 Design Assumptions

- A commercial hazardous waste landfill is used for sludge disposal.
- Transportation distance varies from 200 to 500 miles.
- There is no economy of scale for large waste volumes.
- All wastes pass the Paint Filter Liquids Test or if they fail the Paint Filter Liquids Test, they are stabilized prior to disposal.
- The waste fails the TCLP test.
- Some wastes require stabilization prior to disposal to meet the Land Disposal Restrictions Treatment Standards for toxicity characteristic (TC) wastes.

14.3.2 Cost Components

The cost components for hazardous waste landfill consist of the following items:

- Hazardous waste landfill charges;
- Stabilization charges; and
- Transportation fees.

14.3.3 Cost Components Excluded

The following cost components are not included in the cost equations for hazardous waste landfills:

- Generator notification requirements;
- Manifest requirements; and
- Other RCRA requirements, as applicable.

14.4 TOTAL ANNUAL COST EQUATION

14.4.1 Hazardous Waste Disposal

$$Y = [200\ X] + [(7.9 + 0.22\ Z)\ X]$$

$$Y = [\text{Disposal}] + [\text{Transportation}]$$

Where: Y = $/year
X = Tons of sludge requiring disposal per year
Z = Transportation distance between 200 and 500 miles

14.4.2 Stabilization and Hazardous Waste Disposal

$$Y = [400\ X] + [(7.9 + 0.22\ Z)\ X]$$

$$Y = [\text{Stabilization/Disposal}] + [\text{Transportation}]$$

Where: Y = $/year
X = Tons of sludge requiring disposal per year
Z = Transportation distance between 200 and 500 miles

15.0 RADIOACTIVE WASTE DISPOSAL

15.1 SOURCES OF RADIOACTIVITY IN DRINKING WATER

Radionuclides, such as radium, uranium, and radon, naturally occur in drinking water sources in the United States. Radium is found in ground waters and is most common in the Midwest and Florida. Uranium is found in sandstone and phosphate rock ground waters primarily in western states.

Presently, Federal regulations have established maximum contaminant levels (MCLs) only for radium, gross alpha radiation and beta/photon emitters. In 1976, a drinking water standard for combined radium of 5 picocurries per liter (pCi/L) was set by the U.S. EPA. It was estimated that 1,000 community water supplies exceeded the radium standard in the U.S.; most of which were groundwater systems with capacities of 0.5 million gallons per day or less. Federal MCLs have not yet been established for radon or for natural uranium, although regulations are under development. In addition, waste containing more than 0.05 percent of natural uranium may be regulated as a "source material" under the Atomic Energy Act. Because of existing regulations, radium contamination will be the focus of this section.

In 1990, the EPA issued guidance entitled "Suggested Guidelines for the Disposal of Drinking Water Treatment Wastes Containing Naturally Occurring Radionuclides." The guidance, which is currently being revised, is designed to provide water suppliers and state and local governing agencies with some assistance. The guidance provides recommendations and summarizes existing regulations and criteria used by EPA and other agencies in addressing the disposal of radionuclides generated by industries other than the water treatment industry. Because this guidance is not regulation and regulations vary from state to state, water suppliers should contact radiation and drinking water authorities within their state for additional, state-specific information.

A water supply system with radium levels that exceed regulations has several options to bring the radium levels below the Federal MCLs. The supply can develop a new water source, dilute the radium rich water with less rich water from another source, or treat the water to reduce radium levels. A water treatment plant should carefully study the cost and feasibility of radium removal and disposal of radium-contaminated sludges before choosing to install a radium removal treatment technology.

15.2 RADIUM REMOVAL

Treatment processes that remove radium from drinking water include lime softening, ion exchange, reverse osmosis, manganese green sand filters, and radium selective resins. These processes have 80 to 98 percent removal efficiencies and concentrate the radium removed from the treated water in the treatment media and backwash, brine, and sludge wastes.

Radium wastes generated by drinking water treatment are identified as naturally occurring radioactive material (NORM). The United States does not have Federal regulations governing the disposal of NORM. The United States Nuclear Regulatory Commission (NRC) is mandated to regulate the disposal of high-level and low-level radioactive wastes generated in the United States. The disposal of NORM is not licensed by the NRC because it is not a manmade radioactive waste and does not fall under NRC jurisdiction. The EPA has proposed standards to control the disposal of NORM wastes with radionuclide concentrations greater than 2000 pCi/g (dry weight). Individual states also have proposed regulating the handling and disposal of NORM. Presently, there are no state or Federal regulations governing the disposal of radioactive water treatment wastes and it may be several years before proposed regulations are adopted. However some states, including Texas, Louisiana, Wisconsin, and Colorado, have disposal regulations or proposed state requirements that pertain to Naturally Occurring and Accelerator-Produced Materials (NARM) that limit the discharge of wastes containing radionuclides into the environment.

The radium content in wastes generated by water treatment processes will depend upon the type of wastes, removal efficiency of the process, and the volume of waste generated. Filter backwash water will have little or no elevated radium concentrations. Brines generated from reverse osmosis and ion exchange methods will have a wide variety of radium concentrations. Sludge and solid wastes will have the greatest radium concentrations.

15.3 LOW-LEVEL RADIOACTIVE WASTE DISPOSAL

There are several disposal options for NORM wastes generated by water treatment plants. Most of these disposal methods, including direct discharge to surface waters, discharge to sanitary sewers, land application, and landfilling have been discussed in detail in previous sections. When state and local regulations permit disposal of water treatment plant NORM by these methods, the costs of disposal should be similar to non-NORM sludge disposal costs. One additional disposal option, sending wastes to a low-level radioactive disposal site, has not been mentioned previously and will be discussed in detail here. It should be noted that this will usually be a final option for a water treatment plant that cannot develop a new water source or dilute the radium-rich water with less rich water from another source.

For plants that do not have alternative water sources or cannot reduce the radium in their source by dilution, radium containing waste will require disposal. It is assumed that the final disposal product will consist of a resin or filter media used specifically to capture the radium in the feed water rather than the brine or sludge resulting from more general water treatment. The brines and sludges will not require this special disposal since the radium concentration in these wastes is typically below regulated levels. Consequently, the waste volumes will be significantly lower than those specified for general water treatment.

There are currently three low-level radioactive waste disposal sites operating in Nevada, South Carolina, and Washington, and one NORM disposal site operating in Utah. Each low-level site bases waste disposal costs on several factors including state of origin of the waste, type of

waste, and measured radioactivity at the container surface. All disposal facilities are located in a regional pricing compact. The Low-Level Radioactive Waste Policy Amendments Act (LLRWPAA) of 1985 authorized the formation of regional compacts and a system of incentives and penalties to ensure that states and compacts will be responsible for their own waste after January 1, 1993. States located in a compact with an operational waste disposal facility pay the lowest disposal costs while states located outside of the compacts with disposal facilities pay a disposal surcharge of $40 or $120 per cubic foot (approximately $300 to $900 per 55-gallon drum). The NORM disposal site is not part of a pricing compact and does not add surcharges.

Most water byproduct treatment processes do not generate wastes with radiation levels high enough to be classified as a low-level radioactive waste and that possibility should be minimized through proper treatment design. In some instances, a treatment process may concentrate the radionuclides in activated carbon or in a highly selective resin to levels necessitating disposal at a low-level or NORM site. The choice of a disposal location for NORM is made by the waste generator or by a state regulatory agency.

Several steps must be taken when disposing of a radioactive waste solid to meet the requirements of the disposal facility and the various regulating agencies. First, a low-level or NORM disposal site which will accept the waste is located. Second, all free standing liquids are removed. Third, materials are packaged in 55-gallon drums with 4 mil liners. Fourth, all necessary permitting, shipping, and packaging paperwork is completed and finally, the drums are sent to the disposal site by a Department of Transportation (DOT)-approved carrier with proper care and instructions.

There are several ways a small volume waste generator can arrange for the disposal of wastes at a low-level or NORM site. A small volume waste generator can package the waste materials themselves. After packaging, a collection service (such as those that pick up radioactive wastes from hospitals) can be contracted to pick up the drums, perform a radiation

survey, complete the labelling and paperwork, and deliver the drums to the disposal site. If a waste generator does not want to be involved in the waste packaging and disposal, a broker can be hired to complete the process. Brokers will send trained personnel to solidify or absorb and package all materials. The broker will arrange for transportation and disposal and complete all necessary paperwork. The broker's charges cover all costs including mobilization, transportation of packaged drums, and disposal. Brokers also can be hired to provide oversight and permitting expertise while the waste generators supply the labor and materials necessary for packaging.

15.4 COST INFORMATION

Radioactive waste disposal costs are not included within this report. These costs may be obtained from EPA's guidance entitled "Suggested Guidelines for the Disposal of Drinking Water Treatment Wastes Containing Naturally Occurring Radionuclides" that is scheduled for release in 1993. This revision of the Guidelines, which originally were issued in 1990, will provide cost-related information, recommendations, and a summary of existing regulations and criteria used by EPA and other agencies in addressing the disposal of radionuclides.

16.0 REFERENCES

Ag-Chem Equipment; contacted by Allan Timm and Mary Rooney, DPRA. Concerning terragators. 29 July 1992.

American Water Works Association. Sludge: Handling and Disposal. Denver, CO: American Water Works Association, 1989.

American Water Works Association. Slib, Schlamm, Sludge. KIWA Ltd., 1990.

Aquino, John T. "NSWMA Releases Expanded Tipping Fee Survey." Waste Age. December 1991; pp. 24-28.

Armbrust, Andy, U.S. Ecology; contacted by Mary Rooney, DPRA. Concerning low-level waste disposal costs. 27 July 1992.

Brown, Denise, U.S. Ecology; contacted by Mary Rooney, DPRA. Concerning low-level waste disposal costs. 24 July 1992.

Camp, John, Rain for Rent; contacted by Kristina Uhlig, DPRA. Concerning sprinkler systems. 21 August 1992.

Clark, Viessman, Hammer. Water Supply and Pollution Control. Harper and Row. 1977.

Clingingsmith, Larry, C.P. Environmental; contacted by Mary Rooney, DPRA. Concerning lagoon dredging costs. 19 August 1992.

Cornwell, Bishop, et al. Handbook of Practice, Water Treatment Plant Waste Management. Denver, CO: American Water Works Association, June 1987.

Crase, Arvil, U.S. Ecology; contacted by Mary Rooney, DPRA. Concerning low-level waste disposal costs. 27 July 1992.

Fraigh, Al, American Materials Corporation; contacted by Mary Rooney, DPRA. Concerning sand and gravel costs. 23 August 1992.

Gavzonetti, Gary, Centrisys Corporation; contacted by Mary Rooney, DPRA. 13 August 1992. Contacted by Allan Timm, DPRA. 28 August 1992. Concerning centrifuge applications and cost.

Gregory, Sue, Biogro; contacted by Kristina Uhlig, DPRA. Concerning liquid and dewatered sludge land application costs. 18 August 1992.

Gross, Rod, Envirex, Inc.; contacted by Mary Rooney, DPRA. Concerning gravity thickener application and costs. 24 August 1992.

Gruidi, Dan, Robert D. Hill; contacted by Mary Rooney, DPRA. Concerning density of granular salt. 30 July 1991.

Gumerman, Robert C., Bruce E. Burris, and Sigurd P. Hanser. Small Water Treatment System Costs. Park Ridge, NJ: Noyes Data Corporation, 1986.

Hahn, Norman, Wisconsin Department of Natural Resources; contacted by Mary Rooney, DPRA. Concerning radioactive sludge disposal options. 22 July 1992.

Hahn, Norman. "Disposal of Radium Removal from Drinking Water." American Water Works Association Journal, 1986, pp. 137-144.

Haraldson, Gary, Lakewood Water Treatment Plant; contacted by Mary Rooney, DPRA. Concerning use of sand drying beds. 11 August 1992.

Harrison, Jack, Chem Nuclear; contacted by Mary Rooney, DPRA. Concerning low-level radioactive waste disposal costs. 27 July 1992.

Higgins, Kirt, Envirocare; contacted by Mary Rooney, DPRA. Concerning NORM disposal costs. 27 August 1992.

Hill Reference Library; contacted by Greg Kvaal, DPRA. Concerning bulk and bagged lime costs. 19 August 1992.

Hoeft, Mark, J&M Custom Waste; contacted by Kristina Uhlig, DPRA. Concerning liquid sludge land application costs. 17 August 1992.

Huffman, Tom, Hydro Engineering Inc.; contacted by Kristina Uhlig, DPRA. 19 August 1992. Contacted by Allan Tim, DPRA. 31 July 1992. Concerning sprinkler systems.

Koeckeritz, Orn, Koeckeritz Excavating; contacted by Kristina Uhlig, DPRA. Concerning septic field design and cost. 21 August 1992.

Krall, Tom, Mobile Dredging and Pumping; contacted by Mary Rooney, DPRA. Concerning lagoon dredging costs. 26 August 1992.

Kramer, Brian, Metro Ag Inc.; contacted by Kristina Uhlig, DPRA. Concerning liquid and dewatered sludge land application costs. 20 August 1992.

Krizan, William. "Second Quarterly Cost Report." Engineering News-Record, 29 June 1992, p. 33.

Kuehne, Susan, Star Systems Filtration Division; contacted by Mary Rooney, DPRA. Concerning filter press costs. 17 August 1992.

Lowry, Jerry, Lowry Engineering; contacted by Mary Rooney, DPRA. Concerning low-level radioactive water disposal options. 21 July 1992.

Meltzer, Jim, Northern Gravel Co.; contacted by Mary Rooney, DPRA. Concerning sand and gravel costs. 4 August 1992.

Metcalf & Eddy, Inc. Wastewater Engineering: Treatment, Disposal, Reuse. 2nd ed. Boston, MA: McGraw-Hill, 1972.

Minnesota Pollution Control Agency, Water Quality Division. Individual Sewage Treatment Systems Standards - Chapter 7080. July 1989.

Mohr, Bob, Chem Nuclear; contacted by Mary Rooney, DPRA. Concerning low-level radioactive waste disposal costs. 24 August 1992.

Mueller, Donald, LWT Inc.; contacted by Mary Rooney, DPRA. Concerning lagoon dredging costs. 26 August 1992.

Nidetz, Jeff, Cyrigan; contacted by Mary Rooney, DPRA. Concerning reverse osmosis and ion exchange treatment processes. 12 August 1992.

Nuclear Regulatory Commission Information Digest, 1992 Edition. NUREG-1350, Volume 4. March 1992.

Ohio River Valley Water Sanitation Commission. A Study of Wastewater Discharges from Water Treatment Plants. April 1981.

Parrotta, Marc. "Radioactivity in Water Treatment Wastes: A USEPA Perspective." American Water Works Association Journal, April 1991, p. 134

Parrotta, Marc, US EPA; contacted by Pat Martz Kessler, DPRA. Concerning the Suggested Guidelines for the Disposal of Drinking Water Treatment Wastes Containing Naturally Occurring Radionuclides. March 3, 1993.

Perez, Yvonne, U.S. Ecology; contacted by Mary Rooney, DPRA. Concerning low-level radioactive waste disposal costs. 23 July 1992.

Peterson, Bruce, Peterson Ag Service; contacted by Kristina Uhlig, DPRA. Concerning liquid sludge land application costs. 18 August 1992.

R.S. Means Company, Inc. 1992 Means Site Work and Landscape Cost Data. 11th ed. Kingston, MA: Construction Consultants and Publishers, 1991.

R.S. Means Company, Inc. 1992 Means Mechanical Cost Data. 15th ed. Kingston, MA: Construction Consultants and Publishers, 1991.

R.S. Means Company, Inc. 1992 Means Building Construction Cost Data. 50th ed. Kingston, MA: Construction Consultants and Publishers, 1991.

Richardson Engineering Services, Inc. Process Plant Construction Estimating Standards, Mechanical and Electrical. Vol. 3. Mesa, AZ. 1990.

Richardson Engineering Services, Inc. Process Plant Construction Estimating Standards, Process Equipment. Vol. 4. Mesa, AZ. 1990.

Robertson, R.F. and Y.T. Lin. "Filter Washwater and Alum Sludge Disposal: A Case Study." Proceedings AWWA Seminar on Water Treatment Waste Disposal Seminar, (June 25, 1978), 4, 1-8.

Sadowski, Greg, Sharples/ALFA-LAVAL Company; contacted by Mary Rooney, DPRA. Concerning scroll centrifuge costs. 19 August 1992.

Seefert, Ken, Croixland Excavating; contacted by Kristina Uhlig, DPRA. Concerning French drains. 24 August 1992.

Tabor, Paul, Simpson Filtration Inc., contacted by Allan Timm, DPRA. Concerning filter press costs. 29 July 1992.

U.S. Environmental Protection Agency, Center for Environmental Research Information. Process Design Manual - Land Treatment of Municipal Wastewater. EPA-625/1-81-013. October 1981.

U.S. Environmental Protection Agency, Office of Drinking Water. Radionuclide Removal for Small Public Water Systems. EPA 570/9-83-010. June 1983.

U.S. Environmental Protection Agency, Office of Research and Development. Design Manual - Onsite Wastewater Treatment and Disposal Systems. EPA-625/1-80-012. October 1980.

U.S. Environmental Protection Agency, Office of Research and Development. Innovative and Alternative Technology Assessment Manual. EPA-430/9-78-009. February 1980.

U.S. Environmental Protection Agency, Office of Research and Development. Process Design Manual - Land Application of Municipal Sludge. EPA-625/1-83-016. October 1983.

U.S. Environmental Protection Agency. The Cost Digest: Cost Summaries of Selected Environmental Control Technologies. Prepared by Radian Corporation for the Office of Research and Development. EPA-600/8-84-010. October 1984.

U.S. Environmental Protection Agency. Waste By Products Document in Support of Drinking Water Treatment BAT Cost Analyses. Prepared by Malcolm Pirnie, Inc. for the Office of Drinking Water. April 1990.

U.S. Environmental Protection Agency, Office of Drinking Water. Technologies for Upgrading Existing or Designing New Drinking Water Treatment Facilities. EPA/625/4-89/023. March 1990.

U. S. Nuclear Regulatory Commission. Regulating the Disposal of Low-Level Radioactive Waste, A Guide to the Nuclear Regulatory Commission's 10 CFR Part 61. Office of Nuclear Material and Safeguards.

Vetter, Gerry, Carylon Company; contacted by Kristina Uhlig, DPRA. Concerning dewatered sludge land application costs. 26 August 1992.

Viessman, Warren, Jr., et al. Introduction to Hydrology. 2nd Ed., New York, NY: Harper & Row, 1977.

"Wage Rates for Key Construction Trades." Engineering News - Record, 29 June 1992, p. 57.

Webber, Mike, Farmers Union Co-Op; contacted by Kristina Uhlig, DPRA. Concerning liquid sludge land application costs. 17 August 1992.

Wilcox, Terry, Walder Pump and Equipment; contacted by Mary Rooney, DPRA. Concerning gravity thickeners. 24 August 1992.

APPENDIX A

POTW CHARGES

APPENDIX A

POTW CHARGES

The POTW charges presented in Chapter 9 of this document are based on a limited sampling of POTW rates conducted for this analysis and a survey published by the League of Minnesota Cities. Table 1 presents the results of the telephone sample and Table 2 presents selected results from the League of Minnesota Cities Survey. Three of the cities contacted during the telephone sample do not charge to accept wastes from water treatment plants and a fourth does not have a wastewater treatment plant. In addition, many of the POTWs contacted during the telephone sample and by the League of Minnesota Cities charge a flat rate per month with no additional charges for higher flow rates.

TABLE 1

SEWER RATES - SMALL CITIES
TELEPHONE SAMPLE

City	State	Population	Sewage Fee Charged
Gordo	Alabama	2,112	Business: $7.50/month if <12 employees; $15/month if >12 employees
Clarkdale	Arizona	2,144	Residential: $10/month
Westcliffe	Colorado	324	Residential: $15/month x unit (up to 6 units)
Anthony	Florida	900	No sewer system - well & septic system
Bird City	Kansas	467	$8.50/month
Livermore Falls	Maine	3,500	$15 + $1.87/1,000 gallons
Ada	Minnesota	1,971	$3/month for sewer line + $3/unit if apartment + $.67/1,000 gallons
Cannon Falls	Minnesota	2,653	Minimum: $9.10/2 months + $1.48/1,000 gallon BOD: $44.57/100 pounds Suspended solids: $28.93/100 pounds; Industrial surcharge: $.47/1,000 gallons
Circle Pines	Minnesota	3,321	$5.50/month + $1.10/1,000 gallons
Deer River	Minnesota	907	$9.00 base rate
Harlem	Montana	1,023	Minimum: $7.84/month/meter Gallons used during winter x 12 x .00325 + 1068
Crooksville	Ohio	2,766	$10.80/2,000 gallons + $4.45/1,000 gallons (2K+)
Agate Beach	Oregon	700	$5.25/1,000 gallons + $1/1,000 gallons (1K+) + $.25 surcharge >10,000 gallons + $1.55/1,000 gallons for BOD over 600 mg.

TABLE 2

SEWER RATES
LEAGUE OF MINNESOTA CITIES SURVEY

City	Population	Sewage Fee Charged
Dent	167	$10 (commercial)
Goodridge	191	$5 (residential)
Kettle River	174	$25 (commercial)
Mapleview	235	$18/quarter + $.20/1,000 gallons (over 2.3K)
Steen	154	$18/quarter
Beaver Bay	283	$16/month (residential)
Big Falls	490	$16/month (commercial)
Breezy Point	384	$100/year
Center City	458	$20/<7,999 gallons $26.08/8,000 gallons + $.76/1,000 gallons (8K+)
Hartland	322	$12/quarter
Motley	444	$1.26/1,000 gallons + TSS + BOD (not listed)
Peterson	285	$7.50/month (June-Aug.) or $20/month (other mos.)
Plummer	353	$5 + $.35/1,000 gallons (commercial)
Rose Creek	380	$5 + $1/1,000 gallons (1K+)
Rothsay	476	$1.24/1,000 gallons
Round Lake	480	$10/4,000 gallons + 1.50/1,000 gal. (4K+)
Wood Lake	420	$5/month (Residential)
Argyle	741	$.80/1,000 gallons
Battle Lake	708	$10.28 + $.723/1,000 gallons
Bigfork	541	$19.50/quarter
Butterfield	634	$12 (Residential)

TABLE 2

SEWER RATES
LEAGUE OF MINNESOTA CITIES SURVEY
(continued)

City	Population	Sewage Fee Charged
Carver	642	$3.50/1,000 gallons (Jan., Feb., March) + 2.70/1,000 gallons
Freeport	563	$7 (Residential)
Goodhue	657	Water usage x .50 + $24
Rollingstone	528	$20/quarter
Siver Lake	698	$2.57/1,000 gallons
St. Clair	655	$20 + $1.50/1,000 gallons (6K+)
Adams	797	$4.80 (minimum)
Richmond	867	$6.30 (0-5K) + $1.26/1,000 gallons (5K+)
Walnut Grove	753	$20
Birchwood	1,059	$33/quarter
Maple Lake	1,132	$12.71 (0-3K) + $3.10/1,000 gallons (3K+)
Preston	1,478	$1.55/1,000 gallons
Appleton	1,842	$21.75 + $1.93/1,000 gallons
Blooming Prairie	1,969	$4.50 + $1.26/1,000 gallons
Cold Spring	2,294	$11 (0-6K) + $1.60/1,000 gallons (6K+)
Lake Crystal	2,078	$1.25/1,000 gallons (0-20K) + $.50/1,000 gallons (20K+)
Lakefield	1,845	$1.97/1,000 gallons + 1.13
Lexington	2,150	$33
Mapleton	1,576	$15
Pine Island	1,977	$1.63/1,000 gallons

TABLE 2

SEWER RATES
LEAGUE OF MINNESOTA CITIES SURVEY
(continued)

City	Population	Sewage Fee Charged
Ely	4,820	$2.00/1,000 gallons
Newport	3,323	$8.58 (0-10,000 gallons) $10.66 (10-15,000 gallons) $16.12 (15-25,000 gallons) $26.00 (25-40,000 gallons) $36.40 (40-55,000 gallons) $49.40 (55-75,000 gallons)

TECHNICAL REPORT DATA
(Please read Instructions on the reverse before completing)

1. REPORT NO. EPA 811-D-93-001	2.	3. RECIPIENT'S ACCESSION NO.
4. TITLE AND SUBTITLE Small Water System Byproducts Treatment and Disposal Cost Document		5. REPORT DATE April 1993
		6. PERFORMING ORGANIZATION CODE EPA/OGWDW
7. AUTHOR(S) DPRA Incorporated		8. PERFORMING ORGANIZATION REPORT NO.
9. PERFORMING ORGANIZATION NAME AND ADDRESS DPRA Incorporated E-1500 First National Bank Building 332 Minnesota Street St. Paul, MN 55101		10. PROGRAM ELEMENT NO.
		11. CONTRACT/GRANT NO. 68-CO-0020
12. SPONSORING AGENCY NAME AND ADDRESS		13. TYPE OF REPORT AND PERIOD COVERED
		14. SPONSORING AGENCY CODE

15. SUPPLEMENTARY NOTES
Ben Smith-Project Manager

16. ABSTRACT
This document provides a summary of techniques for projecting the costs of water treatment residuals treatment and disposal. It is a generalized report developed for use in the evaluation of prospective drinking water regulatory alternatives.

17. KEY WORDS AND DOCUMENT ANALYSIS

a. DESCRIPTORS	b. IDENTIFIERS/OPEN ENDED TERMS	c. COSATI Field/Group
drinking water treatment costs, residuals management, cost analysis,		

18. DISTRIBUTION STATEMENT	19. SECURITY CLASS *(This Report)*	21. NO. OF PAGES 131
	20. SECURITY CLASS *(This page)*	22. PRICE

EPA Form 2220-1 (Rev. 4-77) PREVIOUS EDITION IS OBSOLETE