MRI REPORT

EPA-440/9-76-007

WASTEWATER TREATMENT TECHNOLOGY DOCUMENTATION FOR ALDRIN/DIELDRIN MANUFACTURE

REGION III LIBRARY
ENVIRONMENTAL PROTECTION AGENCY

FINAL REPORT
February 6, 1976

Contract No. 68-01-3524
MRI Project No. 4127-C

EPA Project Officer
Mr. Ralph H. Holtje

For

Office of Water Planning and Standards
U.S. Environmental Protection Agency
Waterside Mall, Room 2834
Mail Stop WH595
401 M Street, S.W.
Washington, D.C. 20460

EPA Report Collection
Regional Center for Environmental Information
US EPA Region III
Philadelphia, PA 19103

WASTEWATER TREATMENT TECHNOLOGY DOCUMENTATION FOR ALDRIN/DIELDRIN MANUFACTURE

by

Midwest Research Institute
425 Volker Boulevard
Kansas City, Missouri 64110

FINAL REPORT
February 6, 1976

Contract No. 68-01-3524
MRI Project No. 4127-C

EPA Project Officer
Mr. Ralph H. Holtje

For

Office of Water Planning and Standards
U.S. Environmental Protection Agency
Waterside Mall, Room 2834
Mail Stop WH595
401 M Street, S.W.
Washington, D.C. 20460

PREFACE

This is one of four reports on pesticide-containing wastewaters prepared by Midwest Research Institute for the Office of Water Planning and Standards. These reports concern the wastewater treatment technology involved in the manufacture of aldrin/dieldrin, endrin, toxaphene, and DDT. This report is concerned with aldrin/dieldrin.

These reports were prepared by Dr. Alfred F. Meiners, Mr. Charles E. Mumma, Mr. Thomas L. Ferguson, and Mr. Gary L. Kelso. This program (MRI Project No. 4127-C) has been under the general supervision of Dr. Edward W. Lawless, Head, Technology Assessment Section. Dr. Frank C. Fowler, President, Research Engineers, Inc., and Mr. William L. Bell, President, Arlington Blending and Packaging, acted as consultants to the program.

Approved for:

MIDWEST RESEARCH INSTITUTE

L. J. Shannon

L. J. Shannon, Assistant Director
Physical Sciences Division

February 6, 1976

INTRODUCTION

Midwest Research Institute has performed a comprehensive examination of the wastewater treatment technology applicable to aldrin/dieldrin, endrin, DDT, and toxaphene. The work was performed for the Environmental Protection Agency under Contract No. 68-01-3524.

The basic objectives of the program were: (a) to perform an examination of the wastewater management practices currently employed in the manufacture of the specified pesticide; (b) to examine the state of the art of potential wastewater treatment processes that might be applicable to this industry; and (c) to select those processes that would be applicable to EPA toxic pollutant effluent control technology requirements. Of special interest was the cost of existing and proposed wastewater treatment methods.

This report concerns the wastewater treatment technology for aldrin/dieldrin manufacture.

CONTENTS

		Page
List of Tables		v
List of Figures		v
	ALDRIN/DIELDRIN MANUFACTURE	
Sections		
I	Summary	1
II	Characterization of the Industry	4
	General	4
	Manufacturing Process	5
	Wastewater Characteristics	7
	In-Plant Controls	9
	Plant Visit	10
III	Wastewater Disposal Method	11
IV	Effluent Disposal Methods	13
V	Wastewater Disposal Cost Estimate	14
	Description of the Evaporation System	15
	Installed Cost of the Evaporation System	16
	Total Cost Estimates	23
	References	25

Appendix A - Definition of Terms and Discussion of Conventional Engineering Practices Used in Estimating Costs of Pesticide Wastewater Treatment Processes

TABLES

No.	Title	Page
	ALDRIN/DIELDRIN MANUFACTURE	
1	Total Installed Capital Equipment and Land Cost for the Evaporation System	19
2	Total Investment Cost and Annual Operating Cost for the Evaporation System to Treat Aldrin-Contaminated Wastewater	24

FIGURES

No.	Title	Page
1	Production and Waste Schematic for Aldrin	6
2	Production and Waste Schematic for Dieldrin	8

ALDRIN/DIELDRIN MANUFACTURE

SECTION I

SUMMARY

The pesticides, aldrin and dieldrin, are not currently manufactured in the United States. These insecticides were formerly produced domestically by one manufacturer, the Shell Chemical Company at Denver, Colorado. Shell ceased production following an order of the Environmental Protection Agency suspending the registration and prohibiting the sale of these two insecticides for crop use in the United States.

A brief review of recent events concerning aldrin and dieldrin is presented. The manufacturing processes for aldrin and dieldrin are reviewed and in-plant controls are described. No liquid effluent was discharged from the premises during the manufacture of these pesticides, and no information is available concerning the amounts of wastewater that may have been generated during the manufacture of aldrin or dieldrin. The concentrations of aldrin or dieldrin that may have been present in the wastewaters is also unknown.

The wastewater disposal system at Shell consisted of a 100-acre asphalt-lined evaporation basin located on the plant grounds. This system is considered adequate to achieve zero discharge of any wastewater generated at the Shell facility should production resume in the future.

A limited market for aldrin may continue to exist in the future. This market, consisting of still-registered uses such as termite control, could be as high as 1 million pounds annually, especially if restrictions are placed upon other pesticides which are currently used in such applications. Shell might resume manufacture of aldrin when its inventory is exhausted or may determine that the relatively low volume would not justify reopening the Denver plant or the construction of a new plant. Another company might, however, consider aldrin manufacture a profitable opportunity.

If Shell decides to resume manufacture of aldrin at the Denver plant, then the available 100-acre evaporation basin would very likely be used again to achieve zero discharge. If a new plant were constructed, a new disposal system would be required; possibly an evaporation pond would be built to achieve zero discharge of the liquid effluent, although the volume of wastewater could be so low that a different method (for example, landfill or incineration) would be selected.

This report examines the design of an evaporation pond for wastewater disposal at a new aldrin manufacturing plant. The costs of this pond have been estimated assuming that the new plant would have an annual production volume of 1 million pounds of aldrin and an annual wastewater discharge of 520,000 gal. (from spill cleanups and floor washings).

The evaporation system consists of an 18,000 ft^3 (60 ft x 60 ft x 5 ft) concrete pond covered by a built-up five-ply wood roof. The estimated installed capital cost of the evaporation system is $24,100 and the estimated

annual operating cost of the system is $5,610. The unit operating cost of disposal of the aldrin-contaminated wastewater is $0.006/lb of aldrin.

SECTION II

CHARACTERIZATION OF THE INDUSTRY

GENERAL

The Shell Chemical Company plant at Denver, Colorado, had an annual production capacity of about 20 million pounds for the two insecticides and produced an estimated 13 million pounds of aldrin and 0.5 million pounds of dieldrin in 1972 (von Rümker, Lawless, and Meiners, 1974).

Shell Chemical Company was notified on April 4, 1975 (U.S. Court of Appeals, 1975) that the U.S. Court of Appeals for the District of Columbia Circuit had upheld the order of the Environmental Protection Agency Administrator, Russell E. Train, dated October 1, 1974, suspending the registration and prohibiting the manufacture and sale of the insecticides aldrin and dieldrin for crop use in the United States. This order permitted continued use of aldrin and dieldrin for subterranean termite control, as a root dip for nonfood plants, and for use in closed mothproofing systems.

As a result of the decision and the economic forecast for limited production, Shell Chemical Company decided on April 18, 1975 (Shell,

1975), to terminate immediately its manufacture of aldrin and dieldrin in the United States for any use. Shell had not, in fact, manufactured aldrin/dieldrin since April 1974 (Martin, 1975). This action by Shell resulted in an accelerated decision cancelling the registrations of aldrin and dieldrin (Perlman, 1975).

In the future, a limited market for aldrin may develop (perhaps about 1 million pounds annually), especially if restrictions are placed upon pesticides which are currently used in applications for which aldrin use would be permitted. Shell might again manufacture aldrin or may determine that the relatively low volume would not justify reopening the Denver plant or the construction of a new plant. Also, another company might consider aldrin manufacture a profitable opportunity.

MANUFACTURING PROCESS

The production and waste schematic for aldrin is shown in Figure 1 (Lawless, Ferguson, and von Rümker, 1972). Aldrin was manufactured in dedicated equipment using raw materials shipped from various sources by rail cars, tank cars, and gondola cars. These raw materials were: (a) calcium carbide from Oregon and the Midwest; (b) dicyclopentadiene from Baton Rouge; (c) hexachlorocyclopentadiene from Niagara Falls; and (d) petroleum solvent (for formulation) from Houston (Lawless, Ferguson, and von Rümker, 1972).

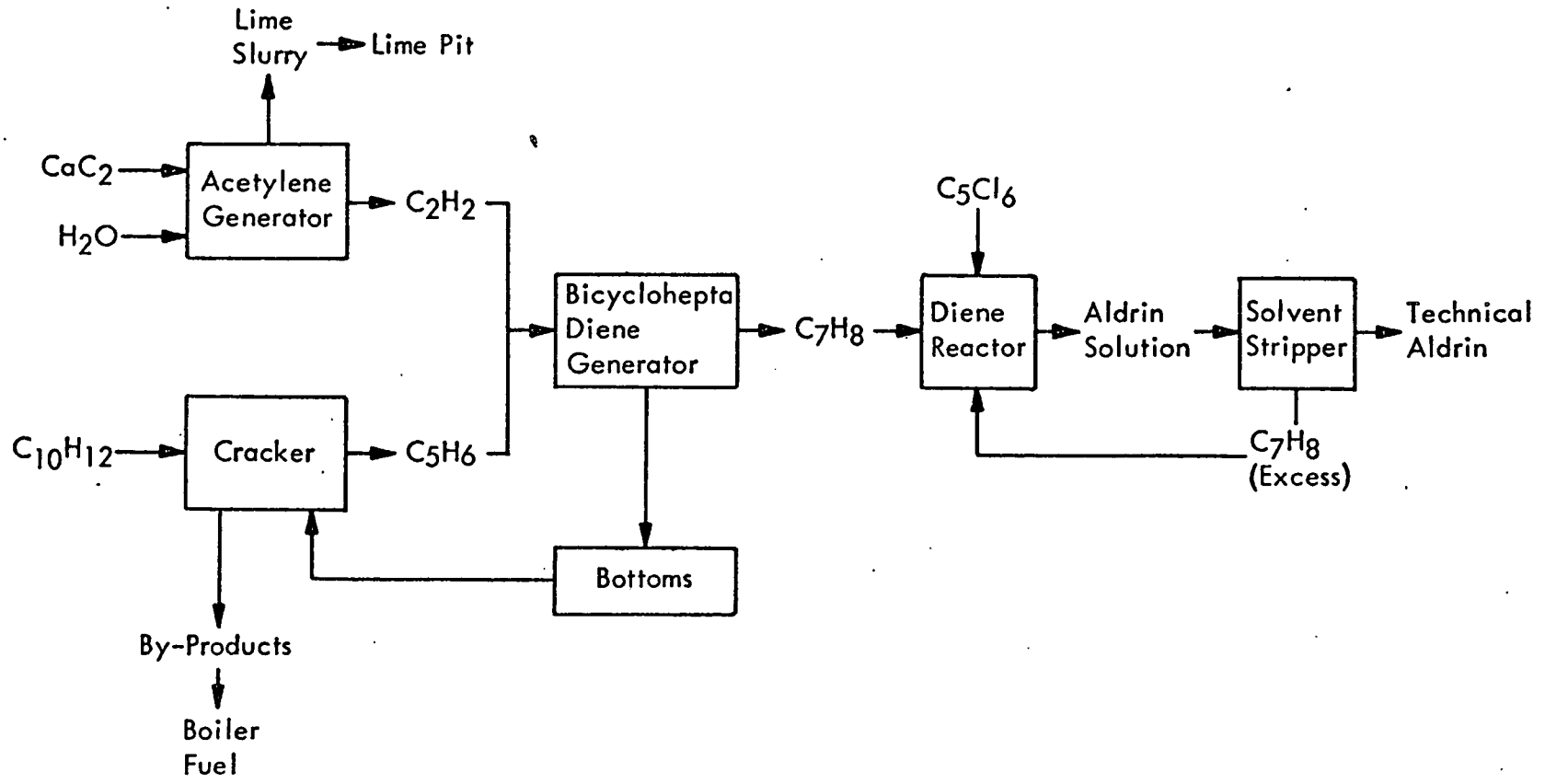

Figure 1 - Production and Waste Schematic for Aldrin

Source: Lawless, E. W., T. L. Ferguson, and R. von Rümker, "Pollution Potential in Pesticide Manufacturing," Final Report by Midwest Research Institute on Contract No. 68-01-0142 for the Environmental Protection Agency, June 1972. (NTIS Nos. PB-213,782/3.)

The reaction chemistry for the production of aldrin was:

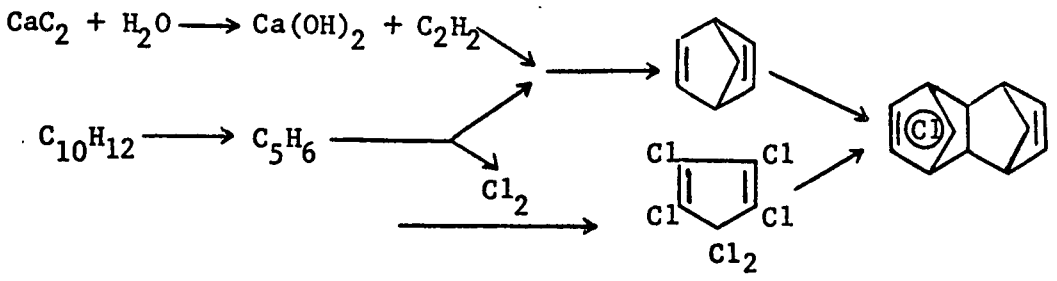

The production and waste schematic for dieldrin is shown in Figure 2 (Lawless, Ferguson, and von Rümker, 1972). Dieldrin was manufactured from aldrin produced on-site with the use of additional raw materials. These raw materials were toluene, acetic acid, sulfuric acid, and hydrogen peroxide.

The reaction chemistry for the production of dieldrin was:

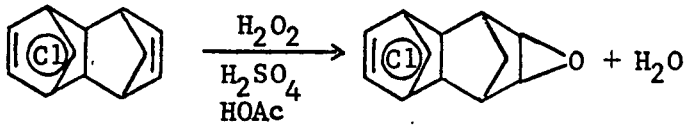

Aldrin Dieldrin

WASTEWATER CHARACTERISTICS

The manufacture of aldrin did not produce wastewater or any liquid waste streams containing aldrin (Ferguson and Meiners, 1974). Small amounts of aldrin-containing liquid wastes resulted from spill cleanup or floor washings. The amount of aldrin in these wastes and the amount of liquid wastes involved in spill cleanup and washing the floor are unknown.

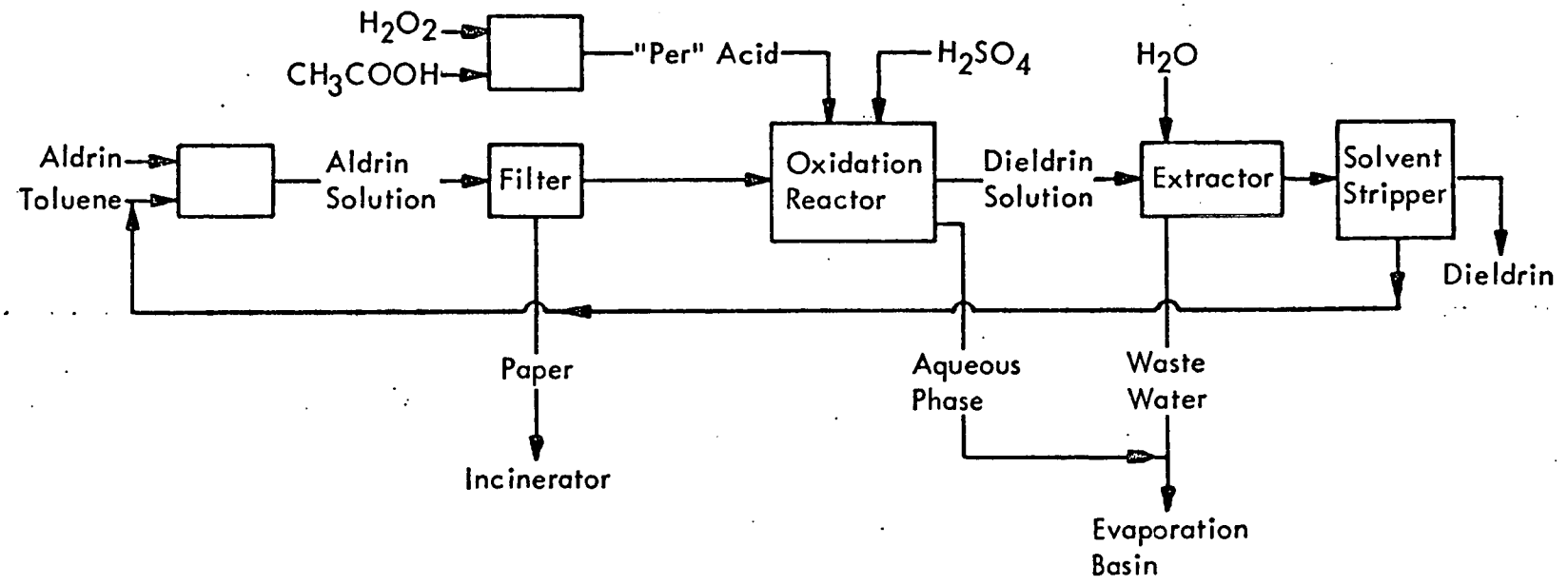

Figure 2 - Production and Waste Schematic for Dieldrin

Source: Lawless, E. W., T. L. Ferguson, and R. von Rümker, "Pollution Potential in Pesticide Manufacturing," Final Report by Midwest Research Institute on Contract No. 68-01-0142 for the Environmental Protection Agency, June 1972. (NTIS Nos. PB-213,782/3.)

The manufacture of dieldrin produced wastewater from the extractor and oxidation reactor. The amount of this wastewater is unknown and the amount of dieldrin in this wastewater is unknown also. Dieldrin was also present in floor washings and spill cleanups as in the aldrin process.

IN-PLANT CONTROLS

The aldrin manufacturing process did not generate liquid effluent containing aldrin since the excess bicycloheptadiene was recycled from the solvent stripper back to the diene reactor. Floor washings and spill cleanups containing aldrin were discharged into a 100-acre evaporation basin. The production area was diked so that water used for cleanup of spills and the production floors would not run off from the plant site (Ferguson and Meiners, 1974).

During summer shutdown, the dedicated aldrin production equipment was washed down with toluene. All of this toluene was collected for use as a raw material input into the dieldrin process (Ferguson and Meiners, 1974).

The aldrin which was produced was packaged in 28-gal. fiber Mylar-lined drums for shipment. About 90% of production was shipped as technical product and was nearly all formulated to granules. The remaining 10% of aldrin product was formulated on-site as an emulsifiable concentrate (4 lb/gal), and packaged in 5, 30, and 55 gal. lined drums. Damaged drums were cleaned and the washings were discharged into the evaporation basin. The cleaned, damaged drums were then incinerated, flattened, and sold as scrap steel (Lawless, Ferguson, and von Rümker, 1972).

REGION III LIBRARY
ENVIRONMENTAL PROTECTION AGENCY

The dieldrin manufacturing process discharged the wastewater from the oxidation reactor and extractor to the 100-acre evaporation basin. A small amount of solid waste, including filter paper which contained aldrin, was burned in a smokeless type incinerator. The floor washings and spill cleanups, which occurred in the diked production area, were discharged into the evaporation basin. Excess liquid from the solvent stripper was recycled in the process (Lawless, Ferguson, and von Rümker, 1972).

The equipment was cleaned and washed with toluene. This contaminated toluene was collected and recycled as a raw material input into the process (Lawless, Ferguson, and von Rümker, 1972).

No dieldrin formulation was conducted on-site. The technical dieldrin was packaged in drums and handled in the same manner as aldrin (Lawless, Ferguson, and von Rümker, 1972).

PLANT VISIT

Much of the information concerning the manufacture of aldrin/dieldrin and the associated wastewater technology was obtained from a visit by MRI personnel to the Shell Chemical Plant at Denver, Colorado, on October 7, 1971 (Ferguson and Lawless, 1971). Additional information was requested by MRI personnel on July 1, 1975 (Mumma, 1975). A reply from the General Manager, Manufacturing and Distribution (Martin, 1975), indicated that Shell was not producing aldrin/dieldrin and had not produced these pesticides since April 1974.

SECTION III

WASTEWATER DISPOSAL METHOD

Shell's method of disposal of all contaminated liquid wastes from aldrin/dieldrin manufacture was to discharge them into a 100-acre asphalt-lined evaporation basin located on the plant grounds (Ferguson and Meiners, 1974). The basin was reported by the company to have had no leaks in its 17 years of use (Knaus, 1971). The amount of aldrin and dieldrin discharged to the evaporation basin from the plant and the volume of contaminated water involved are unknown.

The method of disposal used by Shell appears to have been adequate to prevent the discharge of aldrin and dieldrin into off-premises waterways. The rate at which aldrin/dieldrin decomposed or accumulated in the basin is unknown, and any plans that the company had to dispose ultimately of any accumulated pesticide have not been disclosed. No data are available on any losses of aldrin/dieldrin from the basin to the atmosphere.

No alternate wastewater treatment method is proposed in this report since (a) aldrin and dieldrin no longer have regular domestic agricultural markets and the resumption of large domestic production of these two insecticides appears unlikely; (b) if domestic production does resume, Shell may

again be the sole producer and, as in the past, would probably discharge no wastewater (zero discharge); and (c) if production began at a new site, an evaporation pond could be constructed to maintain zero discharge of wastewater at the new site.

SECTION IV

EFFLUENT DISPOSAL METHODS

Shell's wastewater treatment method consisted of zero discharge and, of course, there was no effluent. However, had the plant continued to operate, the sludge in the 100-acre evaporation basin may have accumulated to the point where disposal of the sludge would have been required. The disposal of the sludge containing aldrin and dieldrin could have been achieved by landfill or incineration.

A new plant for the manufacture of aldrin could use an effluent disposal method similar to Shell's. The disposal method would most likely consist of a small evaporation pond (zero discharge), and the disposal of sludge containing aldrin would be achieved by landfill or incineration.

SECTION V

WASTEWATER DISPOSAL COST ESTIMATE

The existing wastewater treatment system at the Shell Chemical Company plant in Denver, Colorado, involves a zero discharge concept. The wastewater and disposal system which was in operation up to the time of closing the Denver plant in 1975 consisted essentially of dikes, unlined storage basins, the 100-acre evaporation basin, and auxiliary facilities including piping, conduits, etc. No figures are available for the actual cost incurred by Shell in constructing their facility.

Since the 100-acre evaporation pond currently exists at Shell, no estimates for the cost to construct the facility are required. However, in the event that aldrin is manufactured in the future by another company, the construction of an evaporation pond at a new plant site would be required. The cost estimates presented here are the estimated order-of-magnitude costs for contructing a lined evaporation pond and auxiliary facilities for a new aldrin plant with a 1 million pound annual production capacity.

The 100-acre pond at Denver, Colorado, was used for a multipurpose plant, and its capacity far exceeds that required for a plant whose sole purpose

is to manufacture aldrin. As previously mentioned, the manufacture of aldrin produces no wastewater or any liquid waste streams containing aldrin. Small amounts of aldrin-containing liquid wastes are generated from spill cleanup and floor washings. An evaporation pond at a new plant site would need to handle only the spill cleanups and floor washings, and would not require an area of 100 acres.

The costs for an evaporation pond to handle the liquid effluent from a new aldrin plant are discussed below. The discussion is divided into three sections: (a) description of the evaporation system; (b) installed cost of the evaporation system; and (c) total cost estimates for the evaporation system.

DESCRIPTION OF THE EVAPORATION SYSTEM

The purpose of the evaporation system is total containment of the contaminated water used for spill cleanups and floor washings in the aldrin production facility. The required equipment for this system is a concrete evaporation pond covered with a roof, and a single conduit to transport the water from the production area to the pond.

The concrete pond is sized to allow a retention time of 3 months for the wastewater containing aldrin. The amount of wastewater is estimated to be 2,000 gal. each day for daily floor washings and intermittent spill cleanups. The new plant will operate all year, 5 days a week, and will generate 130,000 gal. of wastewater in a 3-month period. No provisions are made to contain surface runoff in the pond since the new plant will be enclosed in a building, and will allow no aldrin to escape onto the plant grounds.

The size of the concrete pond will be 60 ft x 60 ft x 5 ft (18,000 ft^3 or 134,600 gal.). Three feet of the pond depth will lie below the ground surface, and 2 ft will lie above the ground surface (to prevent rainwater runoff from entering the pond). Wastewater will enter the pond from a 6 in. diameter conduit.

Since the future site of the new plant is unknown and, therefore, the net evaporation rate (gross evaporation minus rainfall per unit time) of the area in which the plant would be built is unknown, a roof is provided for the concrete pond. The roof will be constructed of built-up five-ply, will be a pyramid 70 ft on a side with a 15-ft height, and will be supported 10 ft above the top of the pond.

INSTALLED COST OF THE EVAPORATION SYSTEM

The installed cost of the evaporation system described above consists of the following cost items: (a) land; (b) excavation; (c) pond construction; (d) roof construction; (e) auxiliary facilities construction; and (f) related indirect construction costs. Each of these cost items are estimated below.

Land costs vary widely throughout the United States and range from less than $1,000/acre to greater than $50,000/acre, depending upon location. Since the aldrin plant can be constructed at any number of sites, it is assumed that the plant will be built in an isolated rural area where land is valued at $1,000/acre. The amount of land required for the evaporation system is 1/2 acre; thus, the land cost for the system is $500.

Excavation costs depend directly upon the volume of earth moved and amount of finish grading done for preparation of the pond site. Sixty percent of the pond lies below the ground surface, thus, 10,800 ft^3 (0.6 x 18,000 ft^3) or 400 yd^3 must be excavated, assuming the ground is flat. The average cost of site clearing, foundation excavation, and grading is \$1.93/yd^3 in 1970 prices (Guthrie, 1974). This cost is adjusted to April 1975 prices using the Engineering News Record construction cost index, which rose from 1,445.08 in 1970 (Engineering News Record, December 19, 1974) to 2,150.1 in April 1975 (Engineering News Record, May 1, 1975). Thus, the estimated excavation cost for the pond is \$1,150 $\left(\frac{400\ yd^3}{1} \times \frac{\$1.93}{yd^3} \times \frac{2,150.1}{1,445.08}\right)$.

The construction cost for the concrete pond is estimated from the cost of installing 6-in thick reinforced concrete with a 6-in. sub-base, which averages \$9.76/yd^2 at 1970 prices (Guthrie, 1974). This cost is adjusted to April 1975 prices in the same manner as above, and results in a cost of \$14.50/yd^2 $\left(\frac{\$9.76}{yd^2} \times \frac{2,150.1}{1,445.08}\right)$. The inside surface area of the pond is 5,525 ft^2 [(65 x 65) x (4)(5)(65)] or 614 yd^2. Thus, the installed cost of the pond is \$8,900 (614 yd^2 x \$14.50/yd^2).

The construction cost of the built-up five-ply roof is \$0.37/ft^2, based upon 1967 prices (Peters and Timmerhaus, 1968). The surface area of the roof is 5,330 ft^2 (4 x 70 x 38.1 x 0.5). Thus, the cost of the roof in 1967 prices is \$1,970. This cost is adjusted to April 1975 prices using the Engineering News Record building cost index, which rose from 690.48 in 1967

(Engineering News Record, December 19, 1974) to 1,279.1 in April 1975 (Engineering News Record, May 1, 1975). Thus, the estimated installed cost for the roof in April 1975 prices is \$3,650 $\left(\$1,970 \times \frac{1,279.1}{690.48}\right)$.

Additional allowance is made for installation of auxiliary facilities, which in this case is the 6-in. diameter asbestos cement pipe. The installed cost of this pipe is \$5.00/linear foot in 1970 prices (Guthrie, 1974). Assuming the pipe will be 100 ft long, the cost of the pipe, unadjusted, is \$500. This cost is adjusted to April 1975 prices using the Engineering News Record building cost index, which rose from 865.62 in 1970 (Engineering News Record, December 19, 1974) to 1,279.1 in April 1975 (Engineering News Record, May 1, 1975). Thus, the estimated installed cost for the pipe in April 1975 prices is \$740 $\left(\$500 \times \frac{1,279.1}{865.62}\right)$.

Over and above the costs given above, there are related indirect construction costs such as engineering, supervision, consulting, soil testing, etc., that must be added. These costs are estimated to be 25% of construction costs for small ponds that cost less than \$25,000 to construct (Parker, 1975).

TOTAL COST ESTIMATES FOR THE EVAPORATION SYSTEM

The estimates for the total costs to construct and operate the evaporation system are presented below in two sections. The first section gives the total installed capital investment cost, and the second section gives the total annual operating cost.

Total Installed Capital Investment Cost

The cost of purchasing and installing the capital equipment and land has been previously given. Table 1 summarizes and totals the capital investment for the entire evaporation system. A 30% contingency is added to the costs to allow for unanticipated expenses (see Appendix A).

Table 1. TOTAL INSTALLED CAPITAL EQUIPMENT AND LAND COST FOR THE EVAPORATION SYSTEM

Item	Capital Investment Cost (1975 $)
Land	500
Excavation	1,150
Concrete pond	8,900
Built-up five-ply roof	3,650
6-in. diameter pipe	740
Indirect construction costs (25%)	3,600
Subtotal	18,540
Contingency (30%)	5,560
Total	24,100

Annual Operating Costs

The total annual operating costs to operate the system are estimated below. Most of these costs are a percentage of either the installed capital equipment cost or labor costs. The following list shows all of the cost items considered in this estimate.

Direct costs	Indirect costs
Materials	Depreciation
Labor	Property taxes
Supervision	Insurance
Payroll charges	Capital cost
Maintenance	Plant overhead
Operating supplies	
Utilities	
Laboratory services	

Materials - No materials are required.

Labor - Labor costs are wages paid to operating labor. The only operating labor required is for sludge removal from the pond. The amount of sludge that accumulates in the pond is unknown, but the quantity of sludge should be small enough so that removal will only be necessary annually. An estimated 160 man-hours is required to remove the sludge to a nearby landfill on the plant grounds.

The hourly earnings of production or nonsupervisory workers in the chemical and allied products industry, as reported in Monthly Labor Review (May 1975), was $5.18/hr in March 1975. For April 1975, the estimated wage rate is $5.20/hr. This gives an annual operating labor cost of (160)($5.20) or $830.

Supervision - Jelen (1970) reported that supervision of labor is normally estimated as a percentage of operating labor, a typical value being 20%. Using 20% of operating labor costs for labor supervision costs gives an estimate of $170 for this cost.

Payroll Charges - These costs are the result of the many fringe benefits employees receive in addition to their salaries. Recent emphasis on these benefits in labor contracts makes this cost substantial and it is steadily increasing with time. According to Perry and Chilton (1973), the sum of fringe benefits may add between 15 and 40% to the wage rate of employees, and this varies widely from company to company. In this estimate, payroll charges (fringe benefits) are taken to be 30% of the wages paid to both labor and supervision or $300.

Maintenance - The annual maintenance cost for an evaporation pond is about 4% of the installed cost (Blecker and Nichols, 1973) or $600. The annual maintenance cost for the roof (which involves painting and patching) is about $200. These two costs give an annual maintenance cost of $800.

Operating Supplies - Jelen (1970) reported that the cost of operating supplies is typically 6% of labor costs. This amounts to an annual cost for operating supplies of ($830)(0.06) or $50.

Utilities - No utilities are required.

Laboratory Services - Laboratory services furnished to support the monitoring operations are reported by Jelen (1970) to be about 20% of labor costs. Thus, the annual laboratory service cost for the system is ($830)(0.20) or $170.

Depreciation - Depreciation is a periodic charge that distributes the installed capital equipment cost over its expected service life (see Appendix A). This cost estimate uses straight-line depreciation and assumes all capital assets have a zero salvage value.

Blecker and Nichols (1973) reported that the expected life of a sedimentation system is between 25 and 60 years and the life is taken to be 40 years for the purpose of depreciation of the installed costs (see Appendix A). The depreciable installed cost is $24,100 (including contingencies) less the land cost of $500, or $23,600. (Note: The roof would probably not last 40 years, but this fact is disregarded since the roof is only 15% of the total installed cost.)

The annual depreciation cost, then, is \$590 $\left(\frac{\$23,600}{40}\right)$ for the entire evaporation system.

Property Taxes, Insurance, and Capital Costs - Property taxes, insurance, and capital costs are estimated as a percentage of the installed capital equipment cost. These costs are calculated and reported separately in this report to show the cost breakdown of these three items.

Jelen (1970) reported that property taxes are taken to be 2% of capital investment cost, and insurance is generally about 1% of capital investment cost. Capital cost (or interest) is a charge to finance the investment expenditures. The annual rate of interest has varied widely in the recent past, and is taken to be 6.3% (see Appendix A).

Using the above percentages gives the following indirect costs for the entire system: (a) property taxes - \$480; (b) insurance - \$240; and (c) capital cost - \$1,520.

Plant Overhead - Plant overhead is a charge to the costs of the manufacturing facility which are not chargeable to any particular operation and are normally charged on an allotted basis. Overhead includes such cost items as plant supervision, plant guards, janitors, cafeterias, administrative offices, accounting, purchasing, etc. Overhead costs will vary from company to company, are usually calculated as a percentage of direct labor cost or a percentage of installed capital investment for the entire facility, and are allocated to each operation based on its labor or investment cost.

Jelen (1970) reported that plant overhead can range from 40 to 60% of direct labor costs or 15 to 30% of direct costs. Plant overhead is taken to be 20% of direct costs in this report.

TOTAL COST ESTIMATES

All of the costs estimated previously and the total investment and annual operating costs are given in Table 2. The table shows that the estimated total installed capital equipment cost for the evaporation system is $24,100 and the estimated total annual operating cost is $5,610.

Based upon an annual production of 1 million pounds of aldrin, the unit cost of waste disposal of the aldrin-contaminated wastewater is $0.006/lb aldrin.

Table 2. TOTAL INVESTMENT COST AND ANNUAL OPERATING COST FOR THE EVAPORATION SYSTEM TO TREAT ALDRIN-CONTAMINATED WASTEWATER

Cost item	Cost (1975 $)
Total installed capital equipment cost	24,100
Annual operating costs	
Direct costs	
Labor	830
Supervision	170
Payroll charges	300
Maintenance	800
Operating supplies	50
Laboratory	170
Subtotal	2,320
Indirect costs	
Depreciation	590
Property taxes	480
Insurance	240
Capital cost	1,520
Plant overhead	460
Subtotal	3,290
Total annual operating costs	5,610

REFERENCES

Blecker, H. G., and T. M. Nichols, "Capital and Operating Costs of Pollution Control Equipment Modules - Vol. II - Data Manual," EPA-R5-73-023b, July 1973.

Chemical Engineering, p. 117, April 28, 1975a.

Chemical Engineering, inside back cover, October 13, 1975b.

Engineering News Record, May 1, 1975.

Engineering News Record, December 19, 1974.

Ferguson, T. L., and E. W. Lawless, report on plant visit to Shell Chemical Company, Denver, Colorado (1971).

Ferguson, T. L., and A. F. Meiners, "Wastewater Management Review No. 1--Aldrin/Dieldrin," EPA Contract No. 68-01-2579, May 1974.

Guthrie, K. M., Process Plant Estimating Evaluation and Control, Craftsman Book Company of America, Solana Beach, California (1974).

Jelen, F. C., Cost and Optimization Engineering, McGraw-Hill Book Company, New York (1970).

Knaus, J. H., Plant Manager, Shell Chemical Company, personal communication to T. L. Ferguson and E. W. Lawless during plant visit, Denver, Colorado, October 7, 1971 (Cf. Ferguson and Lawless, 1971).

Lawless, E. W., T. L. Ferguson, and R. von Rümker, "Pollution Potential in Pesticide Manufacturing," Final Report by Midwest Research Institute on Contract No. 68-01-0142 for the Environmental Protection Agency, June 1972 (NTIS Nos. PB-213, 782/3).

Martin, A. J., General Manager, Manufacturing and Distribution, Shell Chemical Company. Letter to C. E. Mumma, Senior Chemical Engineer, Midwest Research Institute, July 16, 1975.

Monthly Labor Review, Vol. 98, No. 5, May 1975.

Mumma, C. E., letter to A. J. Martin, General Manager, Manufacturing and Distribution, Shell Chemical Company, Houston, Texas, July 1, 1975.

Parker, C. L., "Estimating the Cost of Wastewater Treatment Ponds," Pollution Engineering, Vol. 7, No. 11, November 1975.

Perlman, H. L., Chief Administrative Law Judge, Accelerated Decision, in re: Shell Chemical Company et al., Registrants, I.F. & R. Dockets Nos. 145 et al., May 27, 1975.

Perry, R. H., and C. H. Chilton, Chemical Engineer's Handbook, 5th Ed., McGraw-Hill Book Company, New York (1973).

Peters, M. S., and K. D. Timmerhaus, Plant Design and Economics for Chemical Engineers, 2nd Ed., McGraw-Hill Book Company, New York (1968).

Shell Chemical Company, News Release, April 18, 1975.

U.S. Court of Appeals for the District of Columbia Circuit in Environmental Defense Fund, Inc., et al. versus Environmental Protection Agency et al., 510 F. 2d 1292 (1975). The April 4, 1975, decision in the aldrin/dieldrin suspension proceedings.

U.S. Environmental Protection Agency, "Development Document for Effluent Limitations Guidelines and New Source Performance Standards for the Major Inorganic Products Segment of the Inorganic Chemicals Manufacturing Point Source Category," EPA-440/1-74-007a, March 1974.

von Rümker, R., E. W. Lawless, and A. F. Meiners, "Production, Distribution, Use and Environmental Impact Potential of Selected Pesticides," Final Report, Contract No. EQC-311, for Council on Environmental Quality, Washington, D.C. (1974).

APPENDIX A

DEFINITION OF TERMS AND DISCUSSION OF CONVENTIONAL ENGINEERING PRACTICES USED IN ESTIMATING COSTS OF PESTICIDE WASTEWATER TREATMENT PROCESSES

Several terms used in the cost estimates require further definition and have been placed in this appendix to avoid a lengthy discussion in the text of the report. The terms which are defined and discussed in this appendix are (a) limits of error for cost estimates, (b) cost indexes, (c) six-tenths factor, (d) one-fourth factor, (e) payroll charges, (f) operating supplies, (g) control laboratory costs, (h) maintenance and repairs, (i) depreciation, (j) capital cost, (k) plant overhead, and (l) contingency for capital investment.

LIMITS OF ERROR FOR COST ESTIMATES

The probable limits of error for the study cost estimates in this report range from 30% above to 30% below the actual costs. Study cost estimates are commonly used to estimate the economic feasibility of a project before expending significant funds for piloting, market studies, land surveys, and requisitions. They may be off by 30% but they can be prepared at relatively low costs using minimum data as follows (see Figure A-1).

Location of site;

Rough sketches of process flow;

Preliminary sizing and material specifications of equipment;

Approximate sizes of buildings and structures;

Rough quantities of utilities;

Preliminary piping;

Preliminary motor list; and

Engineering and drafting man-hours.

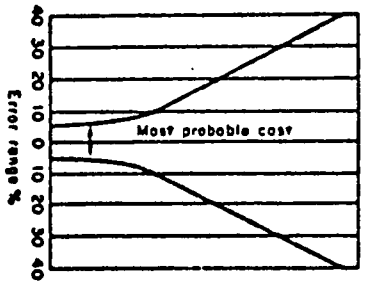

Required information	Firm estimate ±5% range	Project control estimate ±10% range	Budget authorization estimate ±20% range	Study estimate ±30% range	Order-of-magnitude estimate ±30% range	
Location	●	●	●	●		Site
General description	●	●	●			
Soil bearing	●	●	●			
Location & dimensions RR, roads, impounds, fences	●	●	●			
Well-developed site plot plan & topographical map	●	●				
Well-developed site facilities	●					
Rough sketches				●		Process flow sheet
Preliminary			●			
Engineered	●	●				
Preliminary sizing & material specifications			●	●		Equipment list
Engineered specifications	●	●				
Vessel sheets	●	●				
General arrangement						
(a) Preliminary		●	●			
(b) Engineered	●					
Approximate sizes & type of construction			●	●		Building and structures
Foundation sketches		●	●			
Architectural & construction	●	●	●			
Preliminary structural design			●			
General arrangements & elevations	●	●				
Detailed drawings	●					
Rough quantities (steam, water, electricity, etc.)				●		Utility requirements
Preliminary heat balance			●			
Preliminary flow sheets			●			
Engineered heat balance	●	●				
Engineered flow sheets	●	●				
Well-developed drawings	●					
Preliminary flow sheet & specifications			●	●		Piping
Engineered flow sheets	●	●				
Piping layouts & schedules	●					
Rough specifications			●			Insulation
Preliminary list of equipment & piping to be insulated		●				
Insulation specifications & schedules	●	●				
Well-developed drawings or specifications	●					
Preliminary instrument list			●			Instrumentation
Engineered list & flow sheet	●	●				
Well-developed drawings	●					
Preliminary motor list – approximate sizes			●	●		Electrical
Engineered list & sizes	●	●				
Substations, number & sizes, specifications	●	●	●			
Distribution specifications	●					
Preliminary lighting specifications			●			
Preliminary interlock, control, & instrument wiring specs.		●				
Engineered single-line diagrams (power & light)	●	●				
Well-developed drawings	●					
Engineering & drafting	●	●	●	●		Man-hours
Labor by craft	●					
Supervision	●					
Product, capacity, location & site requirements. Utility & service requirements. Building & auxiliary requirements. Raw materials & finished product handling & storage requirements.					●	Project scope standard processes

Figure A-1. Estimating Information Guide

COST INDEXES (Peters and Timmerhaus, 1968)

Most cost data which are available for immediate use in a preliminary or predesign estimate are based on conditions at some time in the past. Because prices may change considerably with time, due to changes in economic conditions, some method must be used for converting costs applicable at a past date to equivalent costs that are essentially correct at the present time. This can be done by the use of cost indexes.

A cost index is merely a number for a given year showing the cost at that time relative to a certain base year. If the cost at some time in the past is known, the equivalent cost at the present time can be determined by multiplying the original cost by the ratio of the present index value to the index value applicable when the original cost was obtained.

Present cost =

$$\text{original cost} \; \frac{\text{index value at present time}}{\text{index value at time original cost was obtained}}$$

Cost indexes can be used to give a general estimate, but no index can take into account all factors, such as special technological advancements or local conditions. The common indexes permit fairly accurate estimates if the time period involved is less than 10 years.

Many different types of cost indexes are published regularly.

Engineering News-Record Construction Cost Index

Relative construction costs at various dates can be estimated by use of the Engineering News-Record construction index. This index shows the variation in labor rates and materials costs for industrial construction. It employs a composite cost for 2,500 lb of structural steel, 1,088 fbm of lumber, 6 bbl of cement, and 200 hr of common labor. The index is usually reported on one of three bases: an index value of 100 in 1913, 100 in 1926, or 100 in 1949.

Marshall and Swift (Formerly Marshall and Stevens) Equipment-Cost Indexes

The Marshall and Stevens equipment indexes are divided into two categories. The all-industry equipment index is simply the arithmetic average of the individual indexes for 47 different types of industrial, commercial, and housing equipment. The process-industry equipment index is a weighted average of eight of these, with the weighting based on the total product value of the various process industries. The percentages used for the weighting in a typical year are as follows: cement, 2; chemicals, 48; clay products, 2; glass, 3; paint, 5; paper, 10; petroleum, 22; and rubber, 8.

The Marshall and Stevens indexes are based on an index value of 100 for the year 1926. These indexes take into consideration the cost of machinery and major equipment plus costs for installation, fixtures, tools, office furniture and other minor equipment.

Chemical Engineering Plant Construction Cost Index

Construction costs for chemical plants form the basis of the Chemical Engineering plant construction cost index. The four major components of this index are weighted in the following manner: equipment, machinery, and supports, 61; erection and installation labor, 22; buildings, materials, and labor 7; and engineering and supervision manpower, 10. The major component, equipment, is further subdivided and weighted as follows: fabricated equipment, 37; process machinery, 14; pipe, valves, and fittings, 20; process instruments and controls, 7; pumps and compressors, 7; eletrical equipment and materials, 5; and structural supports, insulation, and paint, 10. All index components are based on 1957 to 1959 = 100.

SIX-TENTHS FACTOR (Perry and Chilton, 1973)

Cost estimates in this report are given for processes that require scaling up from a given capacity to a larger capacity (e.g., 100 gpm to 300 gpm and 600 gpm). Equipment size and costs were shown to correlate fairly well by the logarithmic relationship known as the "six-tenths factor." The simple form of this method is:

$$C_n = r^{0.6}\, C$$

where C_n is the new plant cost, C is the previous plant cost, and r is the ratio of the new capacity to the old capacity.

This method is the best available for estimating the cost of the systems in this report since each system involves multiple pieces of equipment, piping, instrumentation, etc. The exponent actually ranges from

0.45 to 1.15 for different pieces of equipment, but in complex systems, such as the ones described in this report, estimating the new capacity cost for each piece of equipment is beyond the scope of this study.

Therefore, when scaling the costs up, for example, from a 100 gpm plant size to other plant sizes, the exponent 0.6 is used as an approximation of the scale-up factor for the entire system. In each case, some error may be involved using this method, but no other method is available for this study.

ONE-FOURTH FACTOR (Peters and Timmerhaus, 1968)

The "one-fourth factor" uses the same principle as the "six-tenths factor" with the exception that the exponent 0.25 is used instead of 0.6. This factor is used to scale up labor requirements from one plant size to a larger plant size, and takes into account the fact that larger plant sizes require less than proportional labor forces due to economies of scale.

PAYROLL CHARGES

These costs are the result of the many fringe benefits employees receive in addition to their salaries. Recent emphasis on these benefits in labor contracts make this cost substantial and it is steadily increasing with time. The sum of fringe benefits may add between 15 and 40% to the wage rate of employees (Perry and Chilton, 1973), and the percentage varies widely from company to company. In this report, payroll charges (fringe benefits) are estimated to be 30% of the wages paid to both labor and supervision.

OPERATING SUPPLIES

Operating supplies are items such as lubricating oil, instrument charts, etc., that are neither raw nor repair materials. The cost of these items is typically about 6% of operating labor (Jelen, 1970).

CONTROL LABORATORY COSTS

Depending on company practice and the type of project, operating costs may include several charges by other units of the company, e.g., charges by a control laboratory.

Laboratory costs may be estimated as a percentage of operating labor cost, in the range of 3 to 10%, but the complex situations as high as 20% (Jelen, 1970). Since treatment systems require more laboratory support than typical production processes, in this report the cost of these services is estimated to be 20% of operating labor costs.

MAINTENANCE AND REPAIRS (Peters and Timmerhaus, 1968)

A considerable amount of expense is necessary for maintenance and repairs if a plant is to be kept in efficient operating condition. These expenses include the cost for labor, materials, and supervision.

Annual costs for equipment maintenance and repairs may range from as low as 2% of the equipment cost if service demands are light to 20% for cases in which there are severe operating demands. The annual maintenance costs are given separately for each process in this report, and range from 5 to 15% of the capital equipment cost of the various processes.

DEPRECIATION

Depreciation is a periodic charge that distributes the installed capital investment cost over its expected service life. Instead of charging the cost of the equipment as an expense in the year of purchase, a portion of its cost is charged against revenues each year throughout its estimated useful life.

In this report the estimated useful life is determined by using the arithmetic average of the high and low lifetimes of equipment when a range is given, or 10 years if the useful life is unknown. In some cases, the useful life may be too high by U.S. Treasury Department Standard Guidelines (such as the 40-year life for the sedimentation process) which allows an 11 year depreciation for chemical plant equipment (Perry and Chilton, 1973). However, using 11 years for all equipment would either understate or overstate the real cost in most circumstances. When the useful life is unknown, 10 years is used to conform to the guidelines of the federal government.

A zero salvage value is assumed in all depreciation estimates and straight-line depreciation is used.

CAPITAL COST

Regardless of whether the capital investment is to be obtained from company funds or made available by bankers, it is logical that the invested capital earn a fair interest. If the company funds are not used

for the new unit, then they could be invested to bear a reasonable interest. If the capital is raised by issuing bonds or by borrowing from another corporation, interest would be paid the investor. It should be pointed out that in order to offer a company the incentive to invest its money in a new plant, it should be able to realize as large an interest rate as it could earn by making other investments. Since the risk is somewhat higher than certain conservative investments, the interest rate should be higher than that offered by these securities. Excessive interest rates are not realistic in view of today's regulatory laws. Normally, an interest rate of from 6 to 8% on the unpaid principal is considered satisfactory.

In computing interest, it is necessary to remember that the amount of interest will decrease each year since the unpaid balance is reduced by the depreciation allowed the previous year. An interest rate of 10% would average approximately 6.3% of the total principal each year if the principal is repaid in 10 annual installments. It is customary to express the interest as a uniform fixed cost item each year.

An interest rate of 10% is used in these estimates based on the cost literature (Chemical Engineering, 1975).

In reality, the interest will decline each year and, therefore, the payment on the principal will increase if uniform principal plus interest payments are made. Uniform payments for n periods required to pay the original sum P can be computed from the following equation (Petroleum Refiner, 1957).

$$R = P\frac{i(1 + i)^n}{(1 + i)^n - 1}$$

where P = original sum

R = uniform periodic payment

n = number of payments

i = interest rate as fraction per period

The expression $(1 - i)^n$ is the compound interest expression found in table form in many handbooks (Lange, Handbook of Chemistry). Value of $i(1 + i)^n/(1 + i)^n - 1$ for various values of n and i are listed below (Petroleum Refiner, 1957).

Values of $\frac{i(1 + i)^n}{(1 + i)^n - 1}$

n	2%	4%	6%	8%	10%
1	1.020	1.040	1.060	1.080	1.100
5	0.212	0.225	0.237	0.250	0.264
10	0.111	0.123	0.136	0.149	0.163

If the original investment was $1,000,000 and the loan was at 10% interest for 10 years, the uniform payment would be

$$R = (1{,}000{,}000)\frac{0.1(1 + 0.1)^{10}}{(1 + 0.1)^{10} - 1}$$

$$R = 163{,}000$$

In 10 years the total payment would be $1,630,000. Thus, the total interest is $630,000 and the average interest rate would be

$$\frac{630{,}000}{10(1{,}000{,}000)} = 6.3\%/\text{year}$$

PLANT OVERHEAD

Plant overhead is a charge to the costs of the manufacturing facility which are not chargeable to any particular operation and are normally charged on an allotted basis. Overhead includes such cost items as plant supervision, plant guards, janitors, cafeterias, administrative offices, accounting, purchasing, etc. Overhead costs will vary from company to company and are usually calculated as a percentage of direct labor cost or a percentage of installed capital investment for the entire facility, and allocated to each operation based on its labor or investment cost.

Plant overhead can range from 40 to 60% of direct labor costs or 15 to 30% of direct costs (Jelen, 1970). We estimate that plant overhead is 20% of direct costs in this report.

CONTINGENCY FOR CAPITAL INVESTMENT (Fowler, 1975)

The selection of a contingency figure for an estimate is a matter of the judgment of the estimator. This judgment must consider several factors, such as:

(1) Data basis--laboratory, pilot or plant

(2) Allowance for inflationary trends

(3) Knowledge of construction costs at plant location

Under favorable conditions, the contingency factor may be as low as 10%. However, lacking actual plant cost and considering present inflationary trends, a contingency figure of 30% would be justified.

In the past, cost indexes have been a reliable method of estimating cost based upon plant costs in earlier years. The plant indexes are more reliable when used on plant cost rather than pilot plant costs. It is much more difficult to use them successfully when equipment is pilot plant size or when a small amount of equipment is used. The use of the indexes in the last 2 years has not been as accurate as in the past and can result in too low a plant estimate. Uncertainty increases if cost indexes are used to update plant estimates rather than actual costs.

Unless the estimator has made the original estimate or knows what the plant costs include, a large amount of uncertainty exists when projecting plant costs to other plant capacities and times. It is necessary to know whether a plant investment includes the cost of utilities, such as a steam boiler or cooling tower, or whether steam and utilities are available at the battery limits of the unit in any amount required. It is also important to know whether the plant investment includes the cost of the land and site preparation. Only if these factors are known can the contingency factor be kept to a reasonable figure of 30% or lower.

REFERENCES

1. Chemical Engineering, p. 89, July 21, 1975.

2. Fowler, F. C., Chemical Engineering Consultant to Midwest Research Institute and President of Research Associates, Kansas City, Missouri, Personal Communication to C. E. Mumma, October 15, 1975.

3. Jelen, F. C., Cost and Optimization Engineering, McGraw-Hill Book Company, New York (1970).

4. Perry, R. H., and C. H. Chilton, Chemical Engineers Handbook, 5th Ed., McGraw-Hill Book Company, New York (1973).

5. Peters, M. S., and K. D. Timmerhaus, Plant Design and Economics for Chemical Engineers, McGraw-Hill Book Company, 2nd Ed. (1968).

6. Petroleum Refiner, Process Design Primer, September 1957.

BIBLIOGRAPHIC DATA SHEET	1. Report No. EPA-440/9-76-007	2.	3. Recipient's Accession No.

4. Title and Subtitle

Wastewater Treatment Technology Documentation, Manufacture of Aldrin/Dieldrin

5. Report Date

Pub. June 1976

6.

7. Author(s)

Alfred F. Meiners, Charles E. Mumma, Thomas L. Ferguson and Gary L. Kelso

8. Performing Organization Rept. No. 4127-C

9. Performing Organization Name and Address

Midwest Research Institute
425 Volker Boulevard
Kansas City, Missouri 64110

10. Project/Task/Work Unit No.

11. Contract/Grant No.

68-01-3524

12. Sponsoring Organization Name and Address

Office of Water Planning and Standards
U.S. Environmental Protection Agency
401 M Street, SW
Washington, D. C. 20460

13. Type of Report & Period Covered

Interim Report, Edited

14.

15. Supplementary Notes

Some editing was performed by EPA.

16. Abstracts

This report was prepared to provide technologic supporting information for toxic pollutant effluent standards proposed by EPA under §307(a) of the Federal Water Pollution Control Act Amendments of 1972. The report identifies potential technologies, assesses implementation feasibility, estimates final effluent characteristics and estimates installation and operation costs for Aldrin/Dieldrin manufacturers.

17. Key Words and Document Analysis. 17a. Descriptors

Wastewater
Waste Treatment
Cost Analysis
Cost Comparison
Pesticides
Manufacturers

17b. Identifiers/Open-Ended Terms

Toxic Pollutant Effluent Standards
Federal Water Pollution Control Act

17c. COSATI Field/Group

18. Availability Statement

Release unlimited

19. Security Class (This Report) UNCLASSIFIED

20. Security Class (This Page UNCLASSIFIED

21. No. of Pages 48

22. Price $4.00

INSTRUCTIONS FOR COMPLETING FORM NTIS-35 (Bibliographic Data Sheet based on COSATI Guidelines to Format Standards for Scientific and Technical Reports Prepared by or for the Federal Government, PB-180 600).

1. **Report Number.** Each individually bound report shall carry a unique alphanumeric designation selected by the performing organization or provided by the sponsoring organization. Use uppercase letters and Arabic numerals only. Examples FASEB-NS-73-87 and FAA-RD-73-09.

2. Leave blank.

3. **Recipient's Accession Number.** Reserved for use by each report recipient.

4. **Title and Subtitle.** Title should indicate clearly and briefly the subject coverage of the report, subordinate subtitle to the main title. When a report is prepared in more than one volume, repeat the primary title, add volume number and include subtitle for the specific volume.

5. **Report Date.** Each report shall carry a date indicating at least month and year. Indicate the basis on which it was selected (e.g., date of issue, date of approval, date of preparation, date published).

6. **Performing Organization Code.** Leave blank.

7. **Author(s).** Give name(s) in conventional order (e.g., John R. Doe, or J.Robert Doe). List author's affiliation if it differs from the performing organization.

8. **Performing Organization Report Number.** Insert if performing organization wishes to assign this number.

9. **Performing Organization Name and Mailing Address.** Give name, street, city, state, and zip code. List no more than two levels of an organizational hierarchy. Display the name of the organization exactly as it should appear in Government indexes such as Government Reports Index (GRI).

10. **Project/Task/Work Unit Number.** Use the project, task and work unit numbers under which the report was prepared.

11. **Contract/Grant Number.** Insert contract or grant number under which report was prepared.

12. **Sponsoring Agency Name and Mailing Address.** Include zip code. Cite main sponsors.

13. **Type of Report and Period Covered.** State interim, final, etc., and, if applicable, inclusive dates.

14. **Sponsoring Agency Code.** Leave blank.

15. **Supplementary Notes.** Enter information not included elsewhere but useful, such as: Prepared in cooperation with . . . Translation of . . . Presented at conference of . . . To be published in . . . Supersedes . . . Supplements . . . Cite availability of related parts, volumes, phases, etc. with report number.

16. **Abstract.** Include a brief (200 words or less) factual summary of the most significant information contained in the report. If the report contains a significant bibliography or literature survey, mention it here.

17. **Key Words and Document Analysis. (a). Descriptors.** Select from the Thesaurus of Engineering and Scientific Terms the proper authorized terms that identify the major concept of the research and are sufficiently specific and precise to be used as index entries for cataloging.
(b). Identifiers and Open-Ended Terms. Use identifiers for project names, code names, equipment designators, etc. Use open-ended terms written in descriptor form for those subjects for which no descriptor exists.
(c). COSATI Field/Group. Field and Group assignments are to be taken from the 1964 COSATI Subject Category List. Since the majority of documents are multidisciplinary in nature, the primary Field/Group assignment(s) will be the specific discipline, area of human endeavor, or type of physical object. The application(s) will be cross-referenced with secondary Field/Group assignments that will follow the primary posting(s).

18. **Distribution Statement.** Denote public releasability, for example "Release unlimited", or limitation for reasons other than security. Cite any availability to the public, other than NTIS, with address, order number and price, if known.

19 & 20. **Security Classification.** Do not submit classified reports to the National Technical Information Service.

21. **Number of Pages.** Insert the total number of pages, including introductory pages, but excluding distribution list, if any.

22. **NTIS Price.** Leave blank.