MRI REPORT

EPA-440/9-76-009

WASTEWATER TREATMENT TECHNOLOGY DOCUMENTATION FOR DDT MANUFACTURE

FINAL REPORT
February 6, 1976

Contract No. 68-01-3524
MRI Project No. 4127-C

EPA Project Officer
Mr. Ralph H. Holtje

REGION III LIBRARY
ENVIRONMENTAL PROTECTION AGENCY

For

Office of Water Planning and Standards
U.S. Environmental Protection Agency
Waterside Mall, Room 2834
Mail Stop WH595
401 M Street, S.W.
Washington, D.C. 20460

WASTEWATER TREATMENT TECHNOLOGY DOCUMENTATION FOR DDT MANUFACTURE

by

Midwest Research Institute
425 Volker Boulevard
Kansas City, Missouri 64110

FINAL REPORT
February 6, 1976

Contract No. 68-01-3524
MRI Project No. 4127-C

EPA Project Officer
Mr. Ralph H. Holtje

For

Office of Water Planning and Standards
U.S. Environmental Protection Agency
Waterside Mall, Room 2834
Mail Stop WH595
401 M Street, S.W.
Washington, D.C. 20460

PREFACE

This is one of four reports on pesticide-containing wastewater prepared by Midwest Research Institute for the Office of Water Planning and Standards. These reports concern the wastewater treatment technology involved in the manufacture of aldrin/dieldrin, endrin, toxaphene, and DDT. This report is concerned with DDT.

These reports were prepared by Dr. Alfred F. Meiners, Mr. Charles E. Mumma, Mr. Thomas L. Ferguson, and Mr. Gary L. Kelso. This program (MRI Project No. 4127-C) has been under the general supervision of Dr. Edward W. Lawless, Head, Technology Assessment Section. Dr. Frank C. Fowler, President, Research Engineers, Inc., and Mr. William L. Bell, President, Arlington Blending and Packaging, acted as consultants to the program.

Approved for:

MIDWEST RESEARCH INSTITUTE

L. J. Shannon

L. J. Shannon, Assistant Director
Physical Sciences Division

February 6, 1976

INTRODUCTION

Midwest Research Institute has performed a comprehensive examination of the wastewater treatment technology applicable to aldrin/dieldrin, endrin, DDT, and toxaphene. The work was performed for the Environmental Protection Agency under Contract No. 68-01-3524.

The basic objectives of the program were: (a) to perform an examination of the wastewater management practices currently employed in the manufacture of the specified pesticides; (b) to examine the state of the art of potential wastewater treatment processes that might be applicable to this industry; and (c) to select those processes that would be applicable to EPA control technology requirements for toxic pollutants. The cost of existing and proposed wastewater treatment methods was of special interest.

This report concerns the wastewater treatment technology for DDT manufacture.

CONTENTS

		Page
List of Tables		vi
List of Figures		vii
	DDT MANUFACTURE	
Sections		
I	Summary	1
II	Characterization of the Industry	7
	Background and General Characteristics	7
	DDT Manufacture	9
	Wastewater Characteristics	14
III	Wastewater Treatment Methods	19
	Present Wastewater Treatment Methods	19
	Alternate Wastewater Treatment Methods	19
	Effluent Quality	34
	Comparison of Estimated Effluent Quality with Effluent Limitation Guidelines	37
	Estimated Time Required to Implement Wastewater Treatment Methods	38
IV	Effluent Disposal Methods	41
	Current Disposal Method	41
	Effluent Disposal for Potential Wastewater Treating Methods	41

CONTENTS (continued)

		Page
V	Wastewater Treatment Cost Estimates.	43
	Cost Estimates for Present Wastewater Disposal Method	43
	Cost Estimates for Solvent Extraction/Friedel-Crafts Process.	43
	Cost Estimates for Two-Stage Solvent Extraction with MCB	58
	Order-Of-Magnitude Cost Estimates for Carbon Adsorption and Synthetic Resin Adsorption Treatment Processes . .	58
	References	72
Appendix	- Definition of Terms and Discussion of Conventional Engineering Practices Used in Estimated Costs of Pesticide Wastewater Treatment Processes.	

TABLES

No.	Title	Page
	DDT MANUFACTURE	
1	Summary of Estimated Costs (1975) For DDT Wastewater Treatment and Disposal Systems	4
2	Typical Composition of Untreated Alkaline Wastewater . . .	17
3	Summary of Cumulative Pesticide Removal at 10-ppb Load	27
4	Effluent Limitations Guidelines for Halogenated Organic Pesticides	39
5	Estimated Capital Costs - 10,000 Gal/Day Wastewater Treatment Plant.	45
6	Estimated Daily Operating Costs - 10,000 Gal/Day Plant . .	46
7	Summary of Estimated Daily Operating Costs for Waste Treatment by Solvent Extraction/Friedel-Crafts Method	57
8	Total Investment and Annual Operating Costs for Complete Carbon Adsorption and Resin Adsorption Systems	71

FIGURES

No.	Title	Page
	DDT MANUFACTURE	
1	Production and Waste Schematic for DDT	12
2	Envirogenics Process for Destruction of Pesticides in DDT Manufacturing Waste Streams.	21
3	Chemistry of Friedel-Crafts Reactions with DDT and Metabolites.	23
4	Conceptual Flow Diagram for Two-Stage Extraction of Alkaline Wastewater with Monochlorobenzene (MCB)	25
5	Simplified Adsorption Summary - DDT.	28
6	Removal of DDT From Solution as a Function of Carbon Dosage	29
7	Conceptual Flow Diagram of the Amberlite XAD-4 Resin System and the Activated Carbon Adsorption System For Treatment of DDT Production Plant Wastewater	32

DDT MANUFACTURE

SECTION I

SUMMARY

The Montrose Chemical Corporation is currently the sole manufacturer of DDT in the United States and produces DDT only at its plant at Torrance, California. The estimated production of DDT at this plant for 1975 is about 60 million pounds. The 1975 sales price for DDT (as technical grade) was about 50¢/lb. The production capacity of this plant is about 85 million pounds of DDT per year.

In the production process, monochlorobenzene and chloral are condensed in the presence of concentrated sulfuric acid. Sulfuric acid is recovered and reused. DDT is recovered by crystallization. The manufacturing process is essentially continuous and the plant operates on a three shift per day basis for 360 days/year.

The current manufacture of DDT at the Montrose plant results in the production of alkaline wastewater (30,000 gal/day, containing 119 lb/day, or about 423 ppm of DDT + DDD + DDE) and acid wastewater (10,000 gal/day). At present, these wastewaters are hauled off-site by truck and are disposed of in an approved Class 1 California dump. Sufficient land is available for at least another 25 years of this type of dumping operation. Another

waste stream from the production facility consists of wastewaters from the engine room and from sanitary waste (a total of 5,000 gal/day containing 0 to 5 ppb or 0 to 0.0002 lb/day of DDT + DDD + DDE); this waste is discharged to a sewer leading to a municipal sewerage system. Other wastewater flow is contained within the Montrose plant by a closed-loop processing system, and use of a sealed-bottom holding-recycling pond. Within recent years, Montrose has substantially reduced the volume of their wastewater.

Montrose is currently interested in alternatives to the presently used dumping operation and is investigating potential methods for treatment and disposal of the alkaline wastewater. Montrose is also considering incineration of its acid wastewater as a possible alternate to the current disposal practice.

This report examines in detail four alkaline wastewater treatment systems that have promise of effectively reducing the concentration of DDT and related compounds (DDD + DDE) and the daily load. These systems are: (a) a solvent extraction/Friedel-Crafts method; (b) a two-stage solvent extraction system; (c) activated carbon adsorption; and (d) synthetic resin adsorption.

A summary of estimated costs for these selected alkaline wastewater treatment systems is shown in Table 1 for the current flow rate of 30,000 gal/day (20.8 gpm). Assumptions made in preparing these estimates are detailed in the report. The concentration of DDT in the treated effluent is also estimated.

The 1974 cost for hauling and dumping all segregated alkaline wastewater from the Montrose plant was about 0.48¢/lb of product DDT or $26.40/1,000 gal. The cost for hauling and dumping the acid wastewater in 1974 was about 0.33¢/lb of product DDT or $55.56/1,000 gal.

Solvent Extraction/Friedel-Crafts

This method has been developed and tested through the pilot plant stage. The estimated capital investment for this system is $381,000 and the estimated operating cost is 0.89¢/lb of product DDT or $49.17/1,000 gal. of effluent. This system has the potential of producing an effluent containing about 590 ppb (1.4 lb/day) of DDT and related compounds (DDD + DDE) including about 36 ppb of DDT, 116 ppb of DDD and 438 ppb of DDE.

For this system, costs are also given in Table 1 for a system which treats 45,000 gal/day of wastewater, which is the estimated effluent rate corresponding to operation of the DDT plant at full production capacity. The estimated capital investment for this production rate is $485,000 and the estimated operating cost is 0.86¢/lb of product DDT or $45.09/1,000 gal. of effluent.

This system has not been fully developed and some potential scale-up problems have been noted. The estimated time to complete the engineering design, construct the treatment plant and put this system on-stream is 3 to 4 years.

Two-Stage Solvent Extraction System

The wastewater treatment system which appears to have the most promise from both a technical and economic standpoint is a two-stage extraction

Table 1. SUMMARY OF ESTIMATED COSTS (1975) FOR DDT WASTEWATER TREATMENT AND DISPOSAL SYSTEMS
(Concerning Wastewater at Montrose Chemical Corporation Plant, Torrance, California)

System	Status of system	Alkaline wastewater flow rate		Estimated DDT[c] in wastewater		Capital investment cost ($)	Annual operating cost ($)	Cost cents per pound of DDT produced	Cost per 1,000 gal. of effluent ($)
		gpm	gpd	ppb	lb/day				
Hauling and dumping in Class I landfill[a]	Currently used	20.8[b]	30,000[b]	~423,000	~119	Unknown	285,500	0.48	26.40
Solvent extraction/ Friedel-Crafts	Developed in pilot plant	20.8[b] 31.2	30,000[b] 45,000	~ 590 ~ 590	~ 1.4 ~ 1.4	381,000[f] 485,000[f]	531,000[f] 730,000[f]	0.89[f] 0.86[f]	49.17[f] 45.09[f]
Two-stage extraction with monochlorobenzene	Conceptual for grant application, partially developed	20.8[b]	30,000[b]	~ 32[d]	~ 0.008	101,000[h]	82,800	0.14	7.66
Activated carbon bed adsorption	Conceptual system	20.8[b]	30,000[b]	< 25[e]	< 0.006[e]	230,000[g]	35,000[g]	0.06[g]	3.33[g]
Synthetic resin (XAD-4) adsorption	Conceptual system	20.8[b]	30,000[b]	< 25[e]	< 0.006[e]	209,000[g]	72,000[g]	0.12[g]	6.85[g]

a/ Data for operations in 1974--provided by Montrose Chemical Corporation, Torrance, California (Ferguson and Meiners, 1975).
b/ These values apply for alkaline wastewater currently being handled at the Montrose Chemical Corporation plant in Torrance, California. In addition, 10,000 gpd of acid wastewater, which is not amenable to treatment by solvent extraction or the other potential treatment systems listed, is currently disposed of in an off-site Class I dump.
c/ Includes DDT plus DDD and DDE, except where otherwise noted.
d/ Including 1 ppb of DDT or DDD and 30 ppb of p,p'-DDE.
e/ Represents DDT only; does not account for DDD and DDE which are present.
f/ Study estimates based on unpublished cost data developed from pilot plant tests (Sweeny, 1973).
g/ Order-of-magnitude cost estimates based on meager data.

system which uses monochlorobenzene as a solvent. This system would return all of the recovered pesticide to the DDT process and would result in an effluent which would contain very low concentrations of DDT and DDD (1 ppb of DDT or DDD plus 30 ppb of p,p'-DDE).

Some operating steps for this system have been partially developed in laboratory and pilot stages; under an EPA-supported grant project (approved in January 1976), Montrose and its subcontractors will conduct an intensive investigation to develop and evaluate this potential process.

For the two-stage solvent extraction system, the estimated capital investment is $101,000 and the estimated treatment cost is 0.14¢/lb of product DDT or $7.66/1,000 gal. of effluent. This system has a potential capability to produce an effluent containing about 32 ppb (0.008 lb/day) of DDT and related compounds including 1 ppb of DDT, 1 ppb of DDD, and 30 ppb of p,p'-DDE.

The estimated time required to complete the development of this system and to design and construct a full-scale treatment plant is 3 to 4 years.

Activated Carbon Adsorption

Laboratory isotherm data have been determined for the adsorption of DDT on activated carbon and at least one pilot-scale test has been conducted. Also, laboratory studies have indicated the technical feasibility of this potential treatment system.

The activated carbon adsorption system would have a capital investment cost of about $230,000 and the estimated unit operating costs would be

0.06¢/lb of product DDT or $3.33/1,000 gal. of effluent. This system would have the potential for producing an effluent containing less than 25 ppb (0.006 lb/day) of DDT only; no evaluation could be made regarding the DDD and DDE content of the treated wastewater.

The estimated time required to develop and implement this process for plant operation is 3 to 3.5 years.

Synthetic Resin Adsorption

The resin adsorption system would use a patented synthetic polymeric adsorbent which can be regenerated with recovery of the pesticide. No technical or cost data were found in the published literature concerning the application of this process to DDT wastewater.

The synthetic resin adsorption system would require a capital investment of about $209,000 and the estimated operating cost would be 0.12¢/lb of product DDT or $6.85/1,000 gal. of effluent. This system would be potentially capable of reducing the DDT content in the treated wastewater to less than 25 ppb; no evaluation could be made regarding the DDD and DDE content of the treated wastewater.

The estimated time required for development of this system and the design and construction of a full-scale treatment plant is 3 to 4 years.

SECTION II

CHARACTERIZATION OF THE INDUSTRY

The background and general characteristics of the DDT manufacturing industry are discussed below. The manufacturing process is described and the in-plant controls and wastewater characteristics are discussed.

BACKGROUND AND GENERAL CHARACTERISTICS

DDT (dichloro-diphenyl-trichloroethane), for many years one of the most widely used pesticidal chemicals in the United States, was first synthesized in 1874. Its effectiveness as an insecticide, however, was only discovered in 1939. Shortly thereafter, during and after World War II, the U.S. began producing large quantities of DDT for control of vector-borne diseases such as typhus and malaria abroad, and for agriculture, home and garden, and public health purposes domestically. By the early 1950's, 13 companies were involved in the manufacturing of DDT and exports had become substantial (EPA, 1975).

Domestic production reached a maximum of about 188 million pounds in 1963. By the late 1960's DDT output had declined by about one-third, e.g., 123 million pounds in 1969. Production then declined precipitously, to an estimated 60 million pounds per year in the early 1970's (EPA, 1975).

Among the last firms to cease producing DDT were: Geigy Corporation (1966), Allied Chemical (1969), Olin Corporation (1969), Diamond Shamrock Corporation (1970), and Lebanon Chemicals (1971)(EPA, 1975).

Domestic use peaked at about 79 million pounds in 1959, but declined to about 18 million pounds in 1971 and was 22 million pounds in 1972. More recent estimates of use are not available (EPA, 1975), but are presumably very small because of cancellation actions (see below).

Export lagged behind domestic consumption up to 1958, and the maximum did not occur until 1963. From 1958 onward, the quantity of DDT exported continued to exceed domestic consumption (EPA, 1975).

In January 1971, under a court order (EPA, 1975) following a suit by the Environmental Defense Fund (EDF), EPA issued notices of intent to cancel all remaining federal registrations of products containing DDT. The principal crops affected by this action were cotton, citrus, and certain vegetables (EPA, 1975).

In March 1971, EPA issued cancellation notices for all registrations of products containing the DDT-like insecticide, DDD (also called TDE). DDD (2.2-bis(p-chlorophenyl)-1,1-dichloroethane) was well known to be a DDT metabolite. In August 1971, upon the request of 31 DDT formulators, a hearing began on the cancellation of all remaining federally registered uses of products containing DDT. On June 14, 1972, the EPA administrator announced the final cancellation of all remaining crop uses of DDT in the U.S. effective December 31, 1972. The order did not affect public health

and quarantine uses, or exports of DDT. The administrator based his decision on findings of persistence, transport, biomagnification, toxicological effects and on the absence of benefits of DDT in relation to the availability of effective and less environmentally harmful substitutes. The effective date of the prohibition was delayed for 6 months in order to permit an orderly transition to substitute pesticides (EPA, 1975).

Immediately following the DDT prohibition by EPA, the pesticides industry and EDF filed appeals contesting the June order with several U.S. courts. Industry filed suit to nullify the EPA ruling while EDF sought to extend the prohibition to those few uses not covered by the order. The appeals were consolidated in the U.S. Court of Appeals for the District of Columbia. On December 13, 1973, the court ruled that there was "substantial evidence" in the record to support the EPA administrator's ban on DDT and its metabolites (EPA, 1975).

DDT MANUFACTURE

DDT is currently (1975) manufactured at only one plant in the United States, the Montrose Chemical Corporation facility at Torrance, California. The plant also prepares DDT formulations. The current production capacity is about 85 million pounds of DDT per year (Ferguson and Meiners, 1975). The current (1975) production rate for DDT at this plant is reported to be about two-thirds of capacity (Sobelman, 1975a), and the present sales price for DDT (as technical grade) is about 50¢/lb (Sobelman, 1975a). The rate of production for 1976 and 1977 is expected to be within ± 10 to 15% of the current rate (Ferguson and Meiners, 1975). The rate of production is

REGION III LIBRARY
ENVIRONMENTAL PROTECTION AGENCY

essentially constant during the year. Montrose produces technical grade DDT for sale to WHO, AID, and directly to foreign nations in the Northern and Southern Hemispheres.

DDT (dichloro-diphenyl-trichloroethane) is a name that covers a few isomers, the most active of which is 1,1,1-trichloro-2,2-bis(p-chlorophenyl)ethane. Its manufacture is relatively simple: it is made by condensing monochlorobenzene and chloral in the presence of concentrated sulfuric acid (Lawless et al., 1972).

Production Chemistry

$$C_2H_5OH + Cl_2 \longrightarrow CCl_3CHO$$

$$C_6H_6 + Cl_2 \longrightarrow C_6H_5Cl$$

$$CCl_3CHO + C_6H_5Cl \xrightarrow[2.\ NaOH]{1.\ H_2SO_4} CCl_3CH(C_6H_4Cl)_2 + H_2O$$

75-80%, p,p'-isomer
15-20%, o,p'-isomer
plus related compounds
including DDD and DDE*

The biggest problems in DDT manufacture are in the recovery of unreacted ingredients and in steering the reaction toward production of the desired isomer. The reaction is kept below 30°C and takes place at atmospheric pressure in a stirred batch reactor system (Lawless et al., 1972).

DDT recovery, according to a Diamond Alkali Company patent (Miller, 1960) is by crystallization. Impure DDT is washed with a caustic solution. The washed DDT is then dried and crystallized into solid material (Ferguson and Meiners, 1974).

* DDD is 2,2-bis(p-chlorophenyl)-1,1-dichloroethane; DDE is dichloro-diphenyl-dichloroethylene.

A detailed description of DDT manufacturing has been given by Porter (1962) of the Diamond Alkali Company. A production and waste schematic for DDT is presented in Figure 1.

The manufacturing process is continuous except for batch input to the first stage of the reactor. The plant operates on a three shift per day, 7 days a week basis, except for routine maintenance and lost time caused by breakdowns in operating equipment. The on-stream time each calendar year is reported to be 360 days (Ferguson and Meiners, 1975).

The age of the plant equipment ranges from 28 years old to brand new (Ferguson and Meiners, 1975).

Data for the Montrose DDT operations at Torrance, California, for production equipment, raw-materials, by-products and other process wastes and losses are listed below (Ferguson and Meiners, 1974 and 1975).

Production Equipment

Process continuity:	semibatch	Est. annual production:	60 MM lb/year (1975)
Equipment dedication:	DDT only	Plant capacity:	85 MM lb/year
Equipment age:	Not available	Formulation on site:	Yes

Raw Materials

Material	Received from	Received by	Storage
1. Chloral	Henderson, Nevada	Tank cars	Steel storage tanks on plant site
2. C_6H_5Cl	Henderson, Nevada	Tank cars	Steel storage tanks on plant site
3. Oleum	Compton or Dominques, California	Tank trucks	Steel storage tanks on plant site
4. Caustic	Henderson, Nevada	Tank trucks	Steel storage tanks on plant site

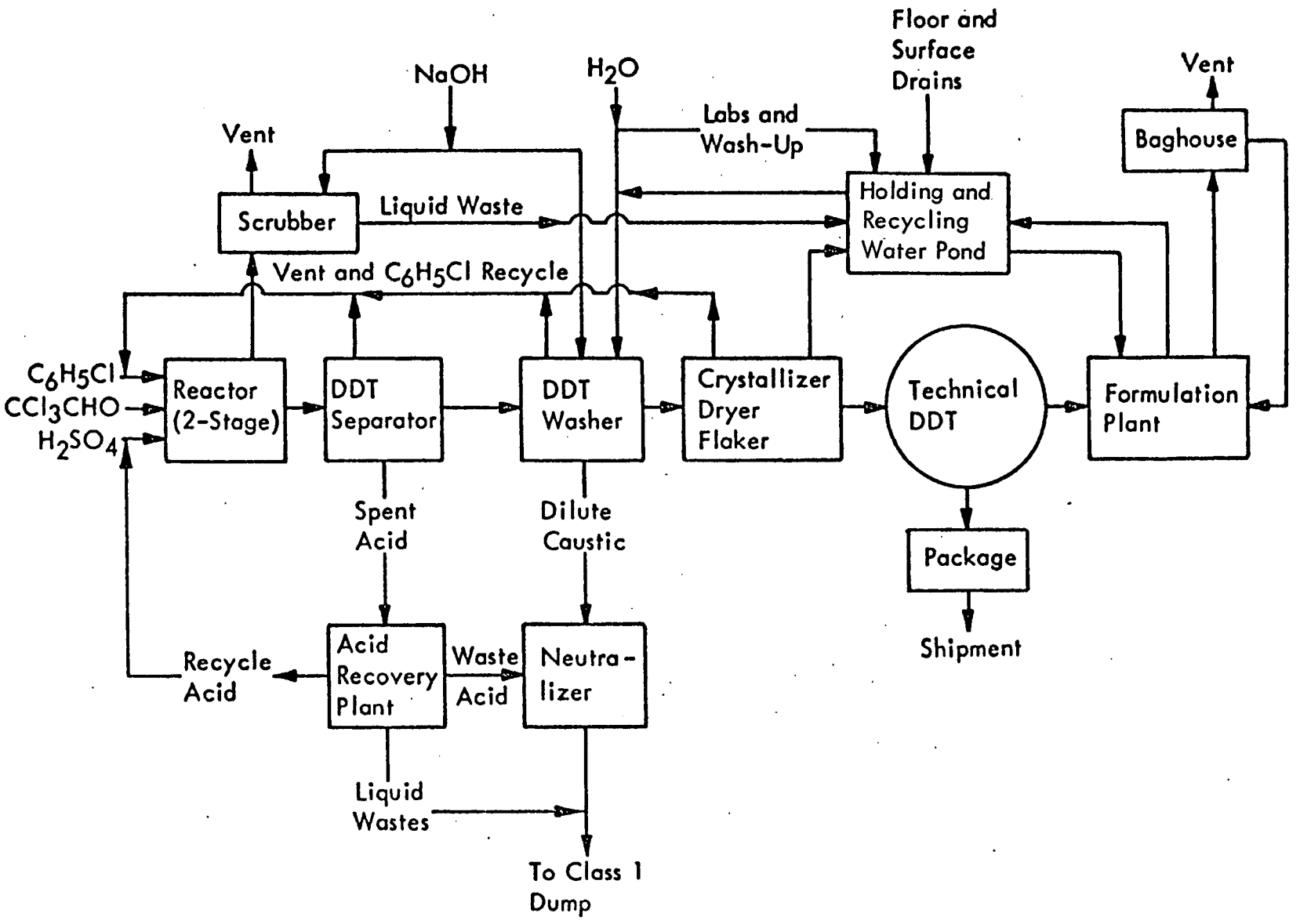

Figure 1 - Production and waste schematic for DDT (Montrose Chemical Company)

Reaction By-Products

Material	Form	Amount produced (lb/lb AI)	Disposition
1. None			

Other Process Wastes and Losses

Material	Form	Amount produced (lb/lb AI)	Disposition
1. Active ingredient	Aqueous	Unknown	Class 1 dump
2. Solvents			
3. Na_2SO_4	Aqueous	0.87 10-15 cu yard/day	Holding pond, recycle Class 1 dump

Disposition of Technical and Formulated Products

Warehouse on site	Shipments				
	Technical product		Formulated products		
	Container	Transportation	Formulation	Container	Transportation
X	50-lb bags	Boxcar	WP (75% AI)	100-200 lb lined fiber drums and 75-lb boxes	Truck for export via Los Angeles; boxcar for other destinations

Hoods are located at points having emissions potential and exhaust under vacuum to a baghouse. No scrubbers are used. Liquid formulations are no longer being made (Ferguson and Meiners, 1974).

Quality control: Montrose maintains its own quality control laboratory for routine analyses. Setting point is the major quality control used. To date they have had no off-specification material that could not be reworked (Ferguson and Meiners, 1974).

Personnel safety: No unusal safety or hazard problems are associated with DDT production. Standard personnel safety equipment is used (Ferguson and Meiners, 1974).

WASTEWATER CHARACTERISTICS

This portion of the report presents a general description of wastewater produced in the manufacture of DDT plus a specific description of the wastewater generated by the Montrose Chemical Corporation.

General Wastewater Characteristics

According to Atkins (1972) the wastes resulting from the DDT manufacturing process include spent acids (hydrochloric and sulfuric), sodium monochlorobenzene sulfonate, chloral, NaOH caustic wastewaters, monochlorobenzene, and sulphonic acid derivatives. The waste streams may contain DDT in the 1 to 5 mg/liter range with DDE and other related compounds present in amounts up to four times the DDT level. The pH of the waste is low and the salt content is high.

The volume of spent acid ranges from 440 to 550 gal/ton of DDT made. This liquid contains 55% acid and 5% other organic substances and water. The first washwater, about 800 gal/ton of DDT made, contains from 2 to 6% spent acid. The second washwater, also about 800 gal/ton of DDT made, contains a very small proportion of spent acid neutralized with sodium carbonate. In addition, about 90 gal/ton issue from centrifuges which contain a smaller proportion of the neutralized acid (Grindley, 1950).

Wastewaters also result from the absorption of the mixed gases from the manufacture of chloral alcoholate. The gases are first water washed, producing a 10% by weight solution of hydrochloric acid (2,700 to 2,900 gal/ton of DDT). The gases are then washed with a caustic soda solution, producting a solution (220 to 440 gal/ton of DDT) containing sodium hypochlorite equivalent to 2.0% chlorine, sodium chlorate equivalent to 0.2 to 0.5% chlorine, some sodium chloride and excess sodium hydroxide (Grindley, 1950).

Wastewater Characteristics - Montrose Chemical Corporation

The process portion of the DDT plant has no liquid waste outfall (Ferguson and Meiners, 1975). Wastewater flow is contained within the plant by a closed-loop processing system, and use of a sealed bottom holding-recycling pond, except for about 30,000 gal/day of alkaline wastewater and about 10,000 gal/day of acid waste, which are currently removed by truck and placed in a California-approved Class 1 dump (Sobelman, 1975b).

There is some decomposition of DDT in the process reactor, and HCl and SO_2 are present in the vent gas. The vent from the reactor is scrubbed with caustic and water. Liquid from off-gas vent scrubbers and surface drainage from the DDT plant area is collected in a holding pond and recycled to the process. This pond serves as the surge capacity for the cooling water system (Ferguson and Meiners, 1975). Sobelman (1975a) has reported that there is essentially no evaporation of water from this pond.

The holding pond (approximately 75 ft x 50 ft x 15 ft deep) has been used for about 20 years, but was lined with concrete about 5 years ago to overcome the necessity of installing test wells to monitor possible leaching (Ferguson and Meiners, 1975). Montrose indicates that this recycle system has been satisfactory and that no significant changes would be made if it had to be constructed today (Ferguson and Meiners, 1975).

At present, the segregated alkaline wastewater from the Montrose DDT plant averages about 30,000 gal/day, but it is estimated that the discharge rate could range up to about 45,000 gal/day if the plant were operated at the maximum DDT capacity of about 85 million pounds per year (Sobelman, 1975b).

Currently, there is one combined source of about 5,000 gpd of wastewater which is being discharged into the sewer of the Torrance, California, plant for DDT production. The breakdown and analysis of this waste stream for DDT and metabolites (DDD and DDE) is as follows:

Source	Gal/day	DDT + DDD + DDE (ppm)	Lb of DDT/day
Engine room	2,500	0-0.005	0-0.0001
Sanitary waste	2,500	0-0.005	0-0.0001
	5,000	0-0.005	0-0.0002

Sources of the principal waste, alkaline wastewater, are neutralized caustic liquor from the DDT-washing operation, tar pot drainings, spills and tank drainings. In 1975, this effluent discharge rate was 30,000 gpd and all of this wastewater was disposed of in a Type 1 landfill. A typical analysis for 1975 of the alkaline wastewater is shown in Table 2.

Table 2. TYPICAL COMPOSITION OF UNTREATED ALKALINE WASTEWATER[a] (Montrose DDT Plant, Torrance, California)

Component	Lb/day	Concentration (ppm)[b]
Sodium sulfate	21,615	76,883
Sodium salt of monochlorobenzenesulfonic acid	3,670	13,054
Caustic	50	177.8
DDT (+ DDE, DDD)	119	423.3
Miscellaneous (tars, etc.)	139	494.4
Water	255,550	
	281,143	

a/ Average flow rate, 30,000 gpd.
b/ Values were calculated from the lb/day data.
Source: Montrose Grant Application (1975).

The discharge rate and characteristics of this waste are fairly constant and do not show seasonal fluctuations. The DDT plant is on stream at this level of two shifts per week and 12 months/year, except for breakdown and routine maintenance.

In-Plant Control - Montrose Chemical Corporation

All drains and process sewers at the Montrose plant have been isolated from the city sewer system. Only sanitary waste and boiler blowdown water go to the city sewers. The restroom lavatory basins, however, discharge to the holding pond system. Water consumption has been reduced from about 20 million gallons to about 2 million gallons per month. Water from the holding pond is also used for cooling water without filtration. This practice has caused no problem to date. The "recycle" water typically contains 10 to 15 ppm DDT (Lawless et al., 1972).

Some 10 to 15 cu yards/day of solid waste, bags, empty containers, etc., are also taken by a commercial disposal service to a Class 1 dump, which is approved for wastes of this type in California. Incineration is not approved.

Equipment washdown is not a problem as this is normally done only during shutdowns. Washwater goes to the recycle pond. Spills and leakers have not been a major problem. One spill occurred when a truck carrying technical material had an accident and spilled DDT. The material was picked up along with the top 3 in. of soil and disposed of (Lawless et al., 1972).

According to the company, DDT losses to the sewer were < 1 lb/day for at least 2 years before modification of the waste treatment facilities and never more than 10 to 15 lb/day since the 1940's. The amounts of DDT entering and leaving various Los Angeles city and county sewers from all sources are uncertain (Dreyfuss, 1971 and Schmidt et al., 1971), but DDT is apparently adsorbed strongly on sewage sediments: the county sanitation district removed 0.5 million pounds of sediments said to contain 4,500 lb of DDT (Air/Water Pollution Report, July 1971). This sediment apparently went also to a Class 1 dump.

SECTION III

WASTEWATER TREATMENT METHODS

A discussion of existing and potential treatment methods for DDT-contaminated wastewater is presented in the following subsections.

PRESENT WASTEWATER TREATMENT METHODS

In 1975, the Montrose Chemical Corporation plant for DDT production (Torrance, California) was disposing of wastewater by ponding, partial reuse and by hauling and off-site disposal in an approved Class 1 California dump and was not treating the wastewater prior to disposal (Ferguson and Meiners, 1975).

ALTERNATE WASTEWATER TREATMENT METHODS

The Montrose Chemical Corporation currently utilizes an off-site Class 1 dump for disposal of wastewater. Montrose is interested in a potential alternative to the presently used landfill, and is investigating other potential methods for treatment and disposal of its principal waste--alkaline wastewater. Montrose is also considering incineration of its acid wastewater as a possible alternative to the current landfill practice (Ferguson and Meiners, 1975).

A discussion of each potential alternate treatment method is presented in the following subsections.

The Solvent Extraction/Friedel-Crafts Wastewater Treatment Method

Under an EPA Grant (EPA Contract No. 68-01-0083, EPA Office of Research and Monitoring), the Envirogenics Systems Company at El Monte, California, conducted an investigation and evaluation of a potential process for treatment of alkaline wastewater from the DDT process. This method is reported to be unsuitable for processing acid wastewater (Ferguson and Meiners, 1975). This process, which has been developed through the pilot-plant scale, involves a two-stage treatment as shown in Figure 2 (Sweeny, 1973). Pesticides are extracted continuously from the DDT manufacturing waste into a hydrocarbon solvent (typically heptane) using a loop-type extractor. The extract is concentrated by distillation (recovered solvent is recycled), and the pesticide components in the concentrate are then condensed to an insoluble form by treatment with a catalyst which causes a modified Friedel-Crafts reaction (Sweeny, 1973).

The first treatment step (i.e., the liquid-liquid extraction of DDT and its metabolites) utilizes a continuous extractor unit (loop-pump system) designed for high-shear mixing (Sweeny, 1973). In this unit the two-phase mixture of wastewater and solvent is pumped through a loop configuration at a rate considerably faster than the rate of bleed off. After suspended solids are separated by settling, the mixture of waste liquor and solvent is passed through a coalescing unit and the solvent extract is separated by decantation. The solvent extract is then concentrated in a reboiler with the vaporized solvent being returned after condensation to an extractor feed tank (Sweeny, 1973).

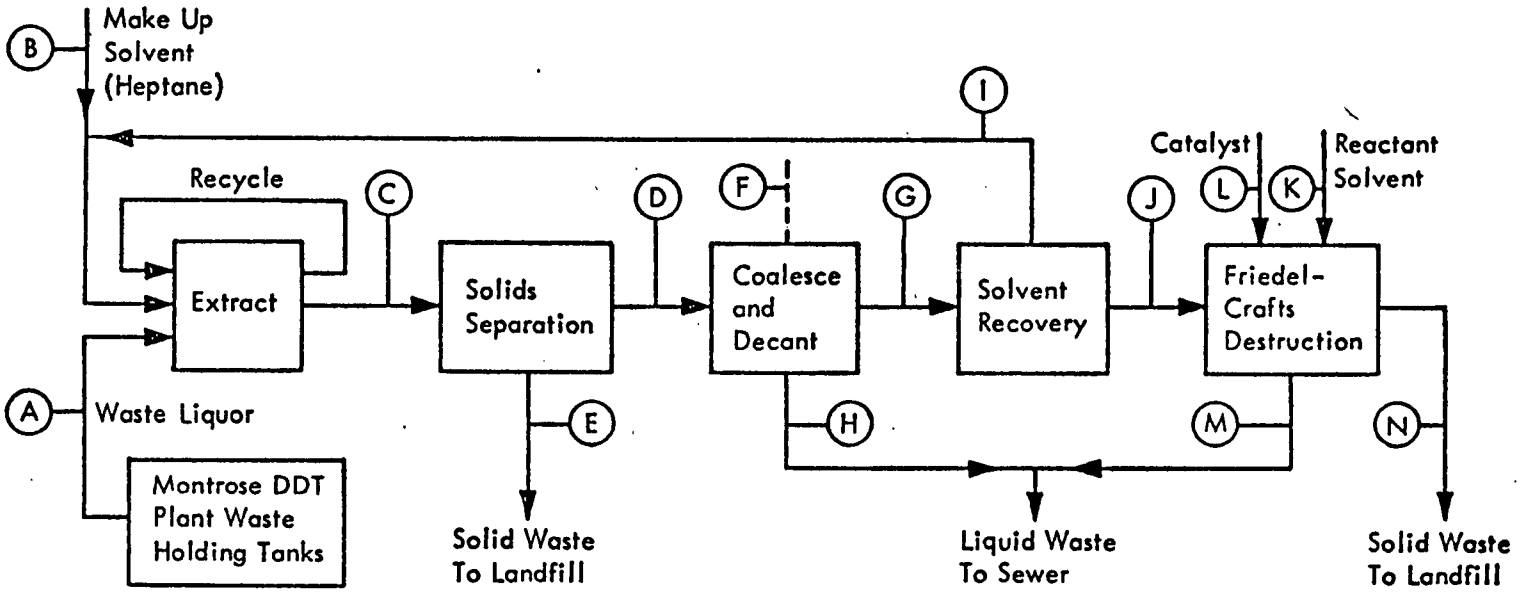

STREAM COMPONENT	MATERIAL BALANCE - LBS OR (GAL) - BASIS - 1 HOUR OF OPERATION													
	A	B	C	D	E	F*	G	H	I	J	K	L	M	N
Heptane		34(6)	337(60)	337(60)		34(6)	303(54)		303(54)					
Water	822		822	877	5			877						
4 soluble non-pesticides														
Pesticides	2.5		2.5	2.5			2.5			2.5				
Other	16		16		16									
Pesticide free-solids														
Chlorobenzene											2.8(0.3)			
$AlCl_3$												1.3		
HCl													0.26	
Organic Waste														6.3
Total	900 (90)	34 (6)	1237	1216	21	34 (6)	305 (54)	877	303 (54)	2.5	2.8 (0.3)	1.3	0.26	6.3

* Nominal Solvent loss for system

Source: Sweeny (1973)

Figure 2. Envirogenics process for destruction of pesticides in DDT manufacturing waste streams ((1.5 gpm) pilot plant flowsheet and material balance).

In pilot-plant demonstration tests, a modified Friedel-Crafts method was found to be suitable for the degradation of pesticides extracted from DDT manufacturing wastewater (Sweeny, 1973). Batches of concentrated pesticide residue were treated with chlorobenzene solvent/reactant and aluminum chloride ($AlCl_3$) catalyst. The catalyst was added and slurried in the chlorobenzene over a 1.5-hr period, and the mixture was allowed to react for an additional hour at about 120°C. This technique involves the use of strong Lewis acids, such as anhydrous $AlCl_3$, to catalyze Friedel-Crafts condensations of the pesticide with itself or a solvent/reactant to form a large, nonreactive, insoluble species. Figure 3 shows the chemistry of some possible Friedel-Crafts reactions of DDT and metabolites. The condensation products of the reaction consist of a tarry residue. This process has a potential disadvantage in that the capital investment required for the pump-loop extractor is expected to be higher than that for a conventional extractor (Swank, 1975). One objective of this process development is to produce a treated effluent suitable for discharging to the municipal sewerage system.

Other Potential Wastewater Treatment Methods

A number of other potential treatment methods for DDT manufacturing wastewater are described in the technical literature (Ferguson and Meiners, 1974; and Sweeny, 1973). These potential treatment methods are two-stage solvent extraction, activated carbon adsorption, synthetic resin adsorption, reductive degradation, photochemical irradiation, and ozonation. These potential methods are discussed below.

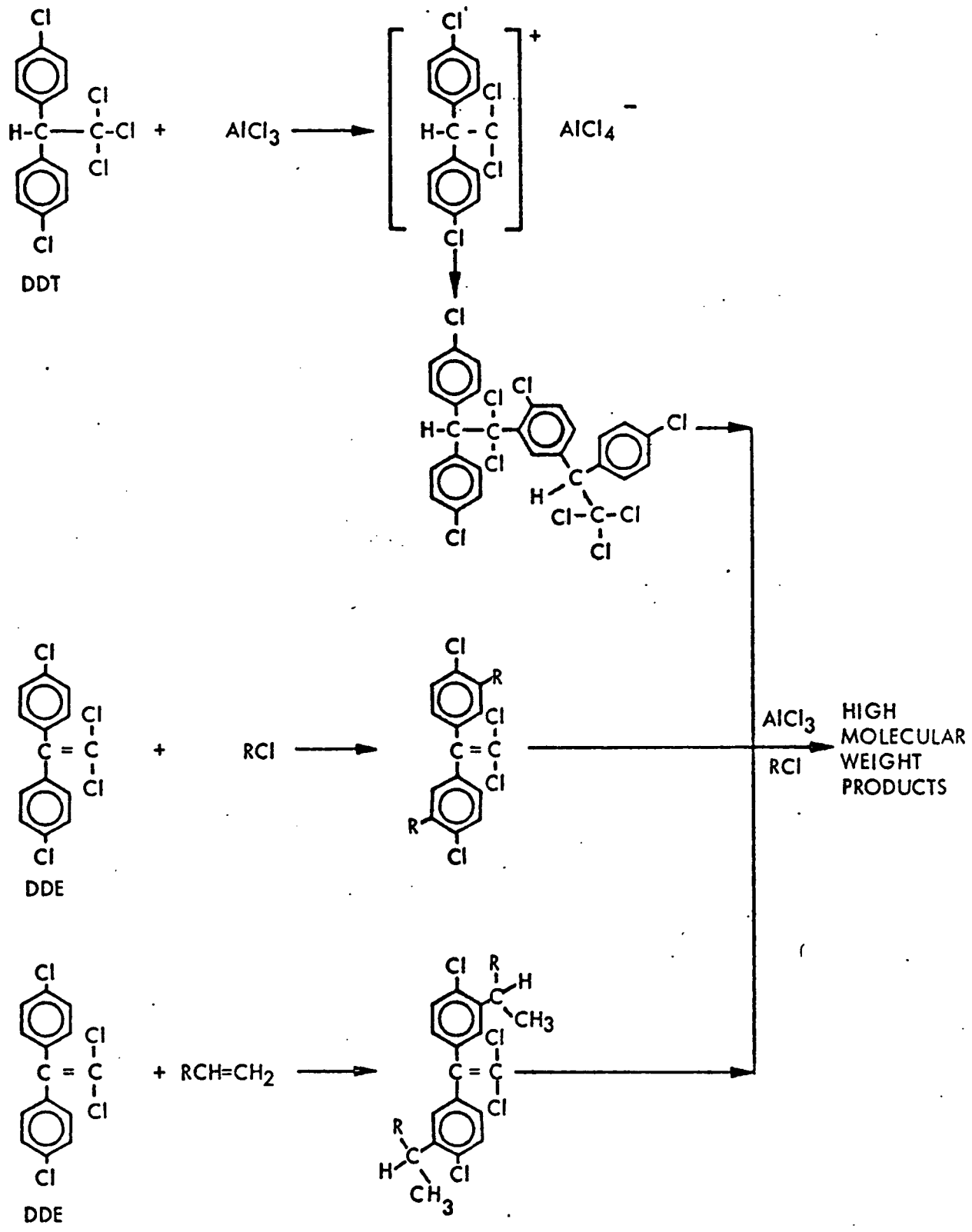

Source: Adapted from Sweeny (1973).

Figure 3. Chemistry of Friedel-Crafts reactions of DDT and metabolites.

Two-Stage Solvent Extraction - A grant application (No. R80429301) by Montrose Chemical Corporation for research and demonstration of a potential process for treating alkaline wastewater to remove DDT and its metabolites was approved by EPA in January 1976. This potential process, which is referred to as a two-stage solvent extraction process, consists essentially of the operating steps shown in Figure 4.

1. The first-stage consists of extraction of the alkaline wastewater with monochlorobenzene (MCB) in a high shear extraction system. Following separation of solids by settling, the mixture is allowed to coalesce and the solvent phase is separated from the aqueous phase by decantation. The separated solvent phase may be returned to the DDT process or to the wastewater treatment process. The separated solid waste can be landfilled.

2. The second-stage consists of extraction of the aqueous phase (from Step 1) with MCB in a packed-bed column, followed by decantation to separate the solvent phase and treatment of the aqueous waste by adsorption on a carbon bed filter to remove residual MCB. The aqueous waste is discharged to a sewer. Periodically, MCB is removed from the carbon bed by application of heat and vacuum and the recovered MCB is returned to the extraction process.

Activated Carbon Adsorption System - Considerable laboratory data are available concerning the adsorption of DDT on activated carbon. The effectiveness of powdered activated carbon on the removal of DDT from water has been reported by Sigworth (1965) and Whitehouse (1967). Sigworth's studies were

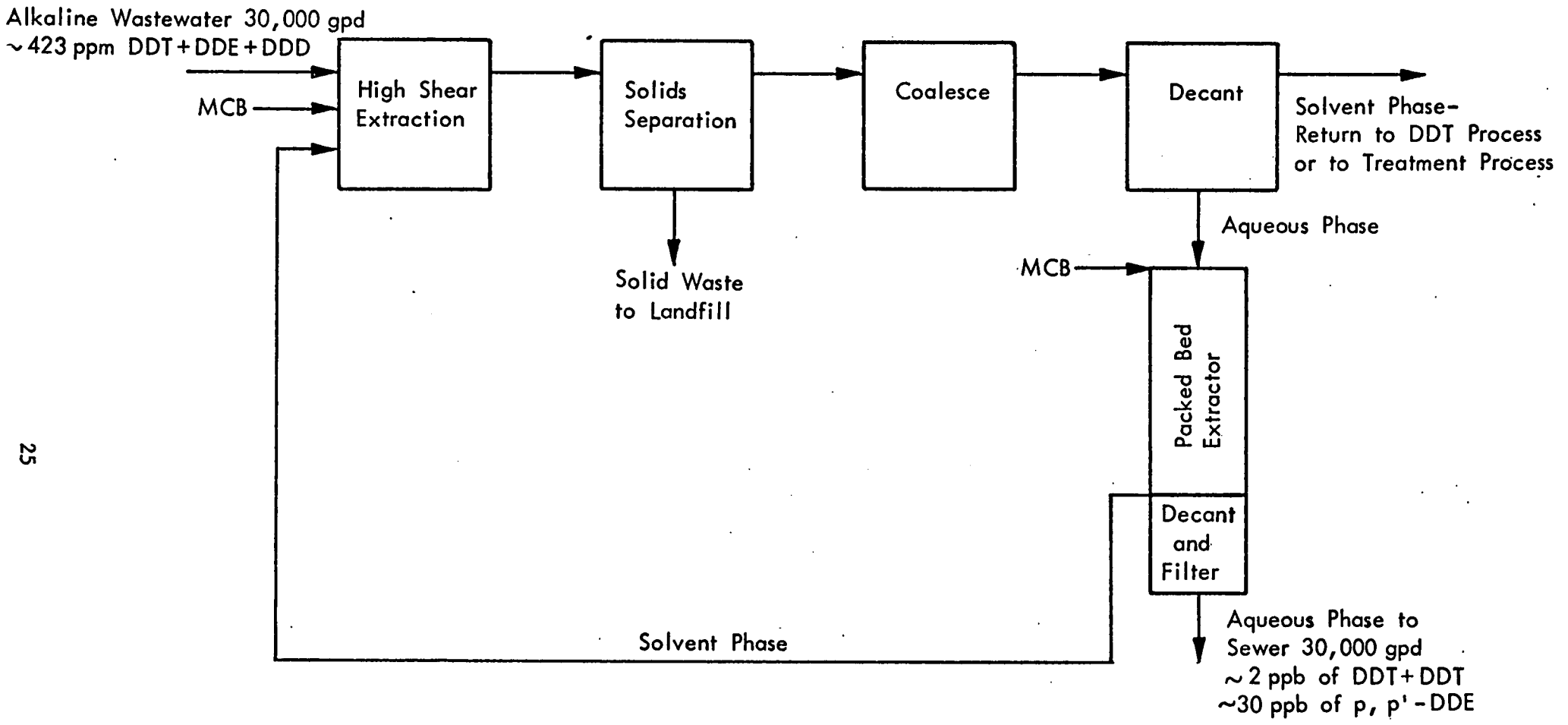

Figure 4. Conceptual flow diagram for two-stage extraction of alkaline wastewater with monochlorobenzene (MCB)

conducted with initial concentrations of 5 mg/liter DDT, and he concluded that 10 mg/liter carbon dosages in a treatment plant would accomplish 90% removal of most of the pesticides that are extensively used today. Whitehouse investigated the effect of carbon dosage and contact time on DDT removal from water, with initial DDT concentration of 0.0044 mg/liter and showed that over 90% DDT removal could be obtained after 1 hr and carbon dosages above 100 mg/liter.

The effectiveness of granular activated beds to remove DDT from water has been investigated by Robeck (1965). Following passage through two carbon columns, it was found that an initial concentration of 10 μg/liter DDT in water was reduced to below 0.1 μg/liter. These data are shown in Table 3.

Hager and Rizzo (1974) have prepared isotherm data for the adsorption of DDT on carbon (Figure 5). The isotherm data of Hager and Rizzo (1974) are not in agreement with the data reported by Whitehouse. As shown in Figure 6, a concentration of 0.2 μg/liter (equivalent to a 95% DDT removal from a solution containing 4.4 μg/liter) would require over 200 mg/liter of the type carbon that Whitehouse investigated. In contrast, extrapolation of the data of Hager and Rizzo (Figure 5) indicates that this same final concentration (0.2 μg/liter) would require only about 4 mg/liter of the type of carbon that these investigators used (0.12% weight pickup). This large difference in reported carbon capability must obviously be resolved before meaningful statements can be made concerning the practicality of DDT removal from water with carbon.

NEW

Table 3. SUMMARY OF CUMULATIVE PESTICIDE REMOVAL AT 10-PPB LOAD

Process	Pesticide removed (%)					
	DDT	Lindane	Parathion	Dieldrin	2,4,5-T Ester	Endrin
Chlorination (5 ppm)	< 10	< 10	75	< 10	< 10	< 10
Coagulation and Filtration	98	< 10	80	55	65	35
Carbon: Slurry						
5 ppm		30	> 99	75	80	80
10 ppm		55	> 99	85	90	90
20 ppm		80	> 99	92	95	94
Carbon: Bed						
0.5 gpm/cu ft	> 99	> 99	> 99	> 99	> 99	> 99

Source: Robeck, 1965 (p. 198).

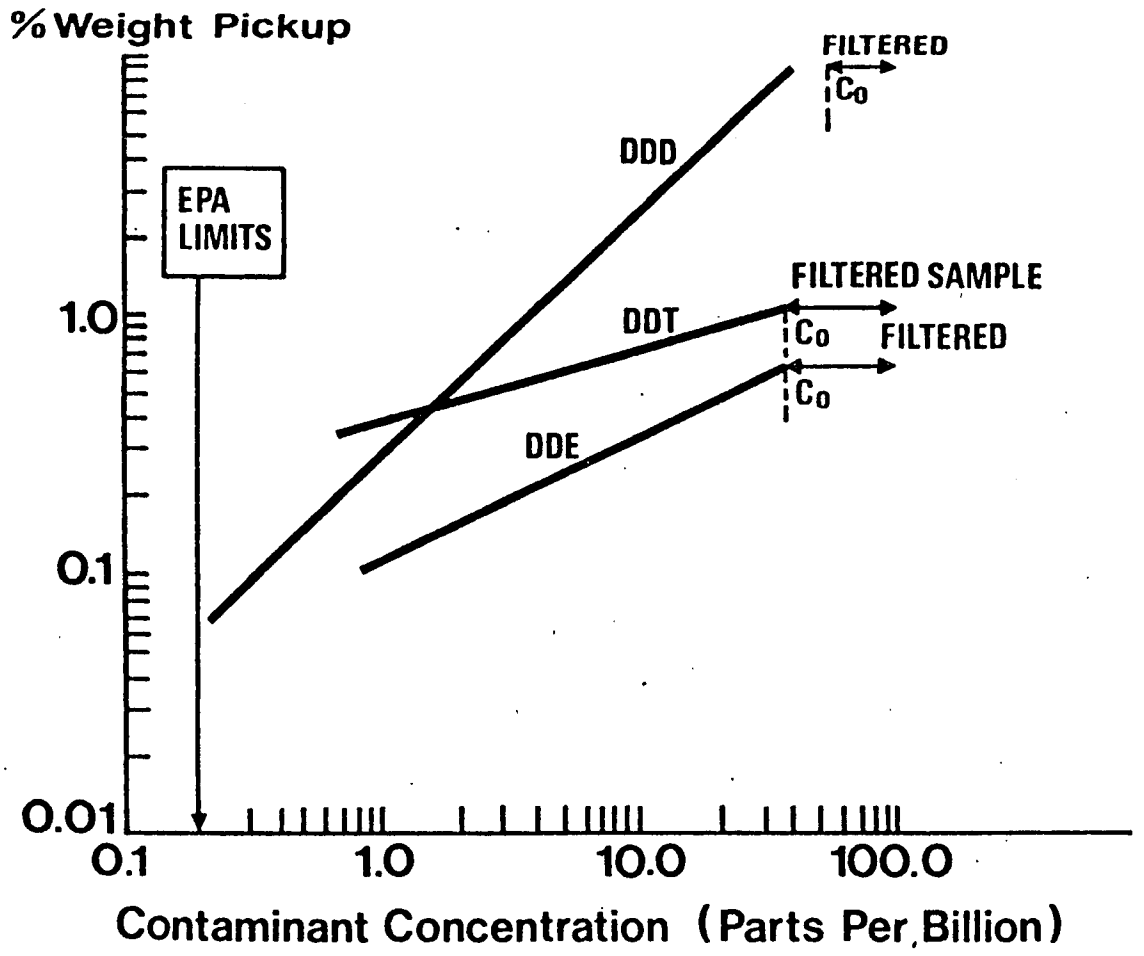

Source: Hager and Rizzo (1974)

Figure 5. Simplified adsorption summary - DDT.

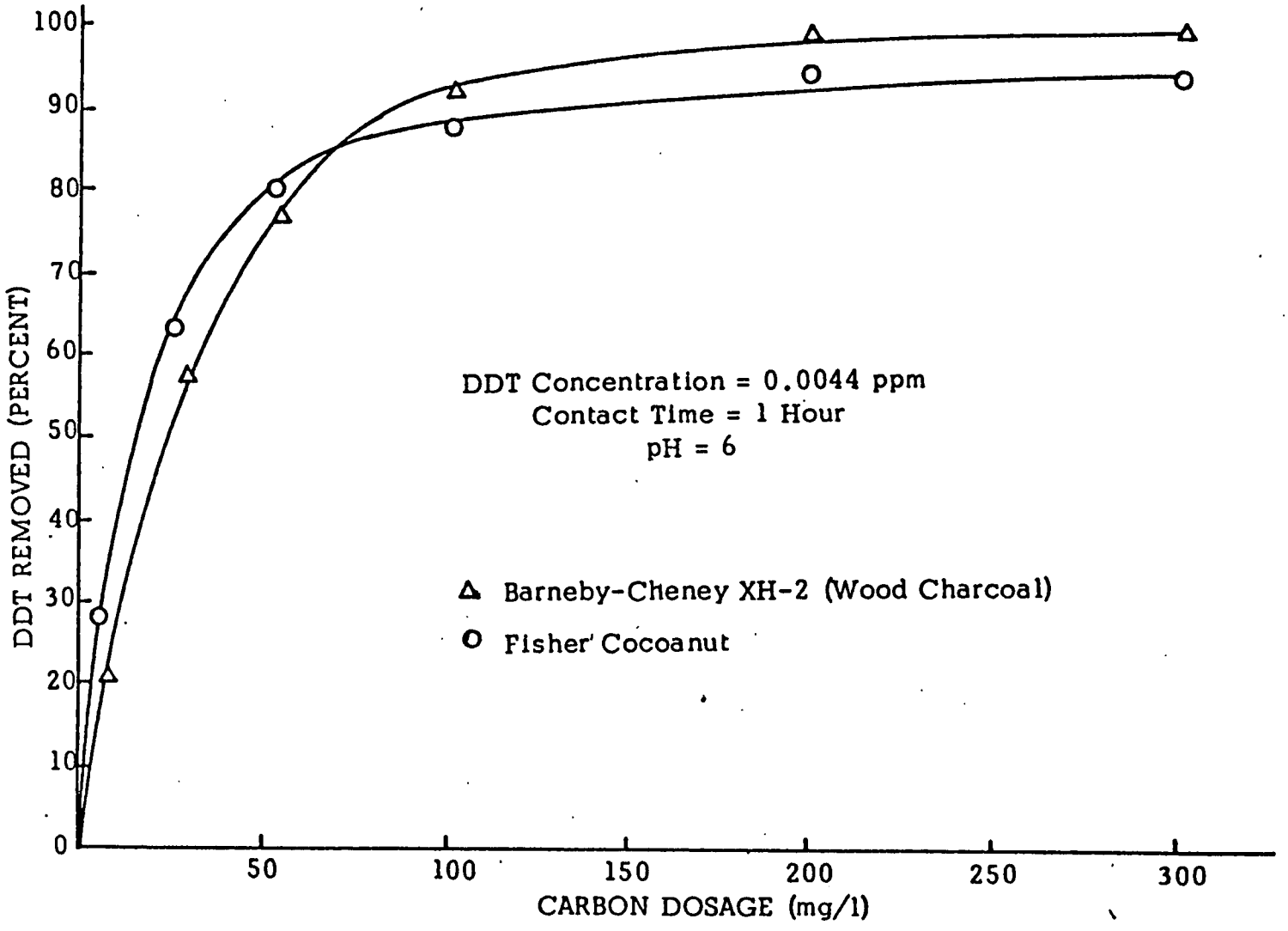

Source: Whitehouse (1967)

Figure 6. Removal of DDT from solution as a function of carbon dosage.

Although the treatability of a particular wastewater by carbon and the relative capacity of different types of carbon for treatment may be estimated from adsorption isotherms, carbon performance and design criteria are best determined by pilot tests. Pilot carbon column tests are performed for the purpose of obtaining design data for full-scale plant construction. Adsorption isotherms are determined using batch tests, but the actual treatment of wastewater by activated carbon most often is effected in a continuous system involving packed beds similar to filtering operations. Pilot tests are required in order to provide the required estimates of performance that can be expected in a full-scale unit. Information which can be obtained from pilot tests includes:

* Type of carbon
* Contact time
* Bed depth
* Pretreatment requirements
* Carbon dosage
* Breakthrough characteristics
* Affect of biological activity
* Headloss characteristics

Pilot carbon column tests for the removal of DDT from wastewater may have been performed; but no pilot-scale data were available to the investigators during this project study.

A conceptual flow diagram for a complete activated carbon system is shown in Figure 7. In this conceptual treatment system, the raw alkaline wastewater from the DDT production plant is combined with a coagulant and treated in a sedimentation process. Settled solids (sludge) are sent to a landfill operation. Wastewater discharged from the sedimentation step

is treated in a filtration process to remove suspended solids. The filter is backwashed periodically to maintain good filtration efficiency. The filtered wastewater is then pumped to an activated carbon bed adsorption process. The carbon adsorption process would consist essentially of two on-stream adsorption units operating in series and the required auxiliary equipment (pumps, piping, process instrumentation, etc.).

Synthetic Resin Adsorption System - The Rohm and Haas Company has developed a synthetic, polymeric adsorbent which shows excellent promise of removal of chlorinated pesticides from wastewater. In this process, pesticides are adsorbed on Amberlite XAD-4, a synthetic, polymeric adsorbent possessing high porosity (0.50 to 0.55 ml of pore per milliliter of bead) high surface area (850 m^2/g) and an inert, hydrophobic surface (Kennedy, 1973). The resin is regenerated with an organic solvent (such as isopropyl alcohol) and the adsorbed pesticides are recovered in a concentrated form.

To the best of our knowledge, pilot-scale tests of the treatment of DDT wastewater by this process have not been performed and no specific cost data on such a potential process are available in the published literature.

A conceptual process flow diagram for a resin adsorption system is shown in Figure 7. This system would be similar to the carbon adsorption system described in this report. The major process steps would involve sedimentation and filtration to remove suspended solids and finally treatment in the resin process to remove dissolved DDT and related compounds.

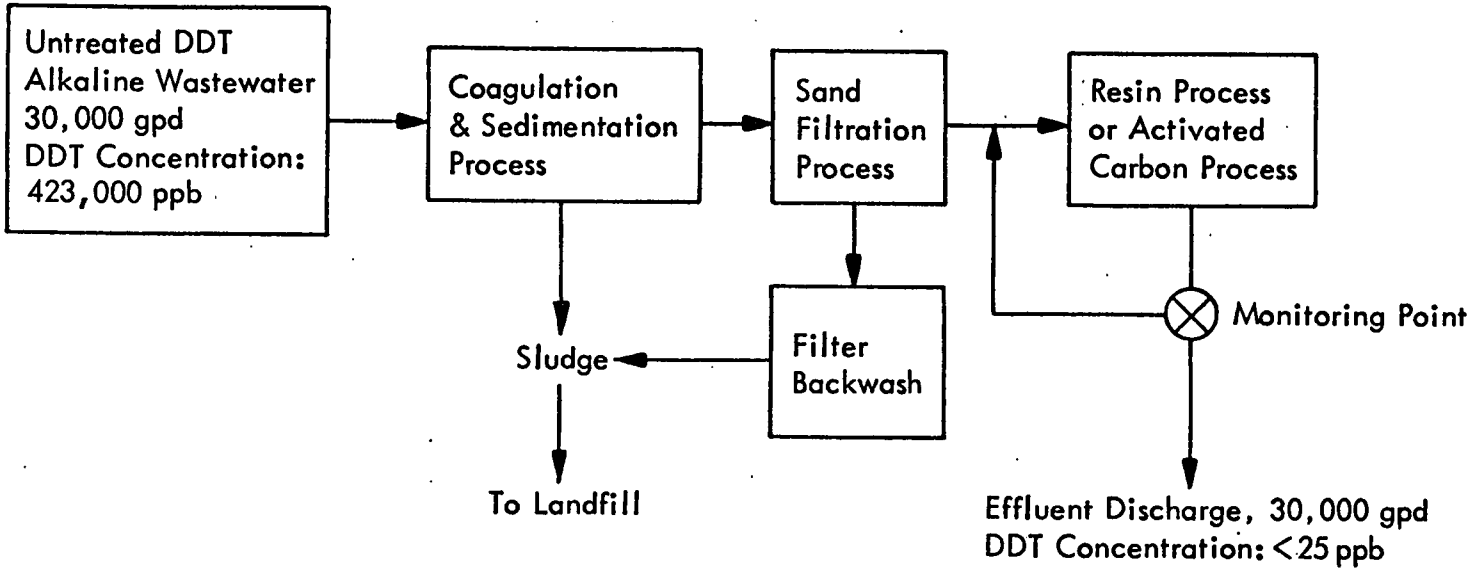

Figure 7. Conceptual flow diagram of the Amberlite XAD-4 resin system and the activated carbon adsorption system for treatment of DDT production plant wastewater.

Reductive Degradation - This method consists essentially of contacting wastewater with catalyzed iron, aluminum or zinc reductants which degrade the pesticides. Copper has been used as a catalyst.

Experimental laboratory tests have shown that the reductive degradation method, while suitable for degradation of DDT, is largely ineffective for DDE-containing waste (Sweeny, 1973). Early studies developed the information that DDE, a principal ingredient of the wastewater from production of DDT was poorly degraded under ordinary conditions with catalyzed iron, aluminum or zinc reductants. Other experiments showed that DDE may be reduced by Raney nickel; however, problems of the reaction stopping because of hydrous oxide coating of the reductant were observed. Later work with more powerful reductants did not reveal a practical method for decomposing all of the pesticide components of DDT manufacturing waste.

Photochemical Irradiation - This potential method for destruction of DDT manufacturing waste consists essentially of exposing the waste to ultraviolet radiation which results in photochemical oxidation.

Extensive laboratory investigations of this potential treatment technique have been made (Sweeny, 1973). Treatment variations which were studied included air or oxygen sparging of a pesticide solution, use of selected hydrocarbon solvents, dehydrohalogenation before irradiation, and other techniques (Sweeny, 1973).

Photochemical irradiation of DDE leads to a reasonably rapid decomposition, but DDT is degraded more slowly and DDD still more slowly (Sweeny, 1973).

Ozonation - Experimental laboratory studies have been conducted to determine the feasibility of destroying DDT waste materials by oxidation with ozone (Sweeney, 1973). The method consists essentially of passing ozone, prepared from pure oxygen, through organic solvent solutions containing DDT, DDE, or DDD. Test results showed that ozonation degrades DDE, that DDD and DDT are more slowly attached, and that ozonation of the solvent is a substantial problem (Sweeny, 1973).

EFFLUENT QUALITY

Solvent Extraction/Friedel-Crafts Treatment

Sweeny (1973) reports that the solvent extraction step can typically reduce the pesticide concentration as follows:

DDT (both p,p'- and o,p'-) reduced 2,000- to 5,000-fold (3,500-fold average)

p,p'-DDD reduced 400- to 2,000-fold (1,200-fold average)

p,p'-DDE reduced 400- to 600-fold
o,p'-DDE reduced 120- to 400-fold
(for total DDE average is ~360-fold)

Data by Sweeny (1973) on wastewater composition indicate that DDT is about 30% of the total pesticide present, that DDD is about 33% of the total pesticide, and that DDE is about 37% of the total pesticide content.

In addition, Sweeny (1973) has reported that in experimental testing, the Friedel-Crafts treatment of extracted pesticide-laden residue (from the loop-extractor operation) led to apparently complete destruction of p,p'- and o,p'-DDT, and p,p'-DDD and a 400- to 1,000-fold reduction (average of 700-fold reduction) of the p,p'- and o,p'-DDE. Thus, the solid waste product from the Friedel-Crafts treatment would contain essentially no DDT or p,p'-DDD and only small quantities of DDE.

On the basis of the above data, the pesticide content of the treated wastewater discharged from the extraction step can be estimated as follows, using the typical composition shown in Table 2 and the average extraction data shown above:

DDT present in raw wastewater $\cong$ 423,000 x 0.3 = 126,900 ppb

DDT reduced from 126,900 ppb to $\left(\frac{126,900}{3,500}\right)$ = ~ 36 ppb

DDD present $\cong$ 423,000 x 0.33 $\cong$ 139,600 ppb

DDD reduced from 62 mg/liter to $\left(\frac{139,600}{1,200}\right)$ = ~ 116 ppb

DDE present $\cong$ 423,000 x 0.37 $\cong$ 156,500 ppb

DDE reduced from 70 mg/liter to $\left(\frac{156,500}{360}\right)$ = ~ 435 ppb

Then the total estimated pesticide remaining in the treated wastewater is 36 (DDT) + 116 (DDD) + 435 (DDE) = 587 ppb or 590 ppb (rounded).

Process for Two-Stage Extraction with Monochlorobenzene

The Montrose Chemical Corporation grant application (1975) states that the reduction of the current alkaline wastewater discharge of ~423 ppm to 1 ppb of DDT or DDD and 30 ppb of p,p'-DDE is a tentative objective, which is believed to be achievable.

Activated Carbon Adsorption System

Robeck (1965) has reported test data for coagulation, filtration and carbon adsorption of DDT wastewater; the influent contained 10 ppb DDT. Coagulation and the filtration removed 98% of the DDT and carbon adsorption removed more than 99% of the DDT. Similar results were reported for wastewaters containing other chlorinated hydrocarbon pesticides. In this study, it was considered that a similar overall removal efficiency would apply for DDT wastewater discharged by the Montrose Chemical Corporation plant of Torrance, California. On this basis the estimated DDT content in the treated effluent can be estimated as follows:

Estimated DDT content of untreated wastewater $\cong$ 127,000 ppb

DDT retained in wastewater following coagulation and filtration is

0.02 x 127,000 or 2,540 ppb

DDT retained in wastewater following carbon adsorption treatment

< 0.01 x 2,540 or < 25 ppb.

Synthetic Polymer (XAD-4) Adsorption System

No specific data were found concerning the effectiveness of removal of DDT from production plant wastewater by a synthetic polymer system.

It was considered in this case that the removal of pesticide by synthetic polymer adsorption would be the same as for carbon adsorption. Thus, the DDT retained in wastewater following treatment in the resin adsorption system is estimated to be less than 25 ppb.

COMPARISON OF ESTIMATED EFFLUENT QUALITY WITH EFFLUENT LIMITATION GUIDELINES

The Environmental Protection Agency in its "general instructions" to contractors (Part II) describes effluent limitations guidelines in terms of Level I, II, and III technology. These levels of technology are briefly defined below and replace the terms "best practicable control technology currently available" (BPCTCA), "best available technology economically achievable" (BATEA) and "best available demonstrated control technology" (BADCT).

Level I - Control and Treatment Technology

This level must be achieved by all plants in each industry not later than July 1, 1977. "Level I technology should be based upon the average of the best existing performance by plants of various sizes, ages and unit processes within each industrial category or subcategory. This average shall not be based upon a broad range of plants within an industrial category or subcategory, but shall be leased upon performance levels achieved by exemplary plants."

Level II - Control and Treatment Technology

This level is to be achieved not later than July 1, 1983. "Level II technology is not based upon an average of the best performance within an

industrial category, but is to be determined by identifying the very best control and treatment technology employed by a specific point source within the industrial category or subcategory, or where it is readily transferable from one industry process to another, such technology may be identified as Level II technology."

Level III - Control and Treatment Technology

This level is to be achieved by new sources. "Level III technology shall be evaluated by adding to the consideration underlying the identification of Level II technology a determination of what higher levels of pollution control are available through the use of improved production processes and/or treatment techniques."

Effluent limitations guidelines have been tentatively recommended (Weston, 1975) for the "Halogenated Organic Pesticides" subcategory of the "Pesticides and Agricultural Chemicals Industry" category (Table 4).

ESTIMATED TIME REQUIRED TO IMPLEMENT WASTEWATER TREATMENT METHODS

The estimated minimum time period required to implement each alternate wastewater treatment system is discussed below. These estimates are based upon (a) an analysis of information concerning probable difficulties in accomplishing the required process development and (b) the experience and judgment of MRI project personnel.

The solvent extraction/Friedel-Crafts method has not been fully developed and some potential scale-up problems have been noted (Swank, 1975). The estimated time required to complete the engineering design, construct the plant and put this process on stream is 3 to 4 years.

Table 4. EFFLUENT LIMITATIONS GUIDELINES FOR HALOGENATED ORGANIC PESTICIDES (Tentative Recommendations)

Level of technology	Effluent characteristic	Effluent limitations: Average of daily values for 30 consecutive days shall not exceed kg/kkg[a]	mg/liter	Maximum for any one day kg/kkg	mg/liter
Level I (BPCTCA)	BOD_5	1.01		1.80	
	Phenol	0.0015		0.002	
	TSS		84		156
Level II (BATEA)	BOD_5	1.01		1.80	
	Phenol	0.0015		0.0020	
	COD	1.53		2.12	
	TSS		42		78
Level III (BADCT)	BOD_5	1.01		1.80	
	Phenol	0.0015		0.0020	
	TSS		42		78

a/ kg/kkg Production is equivalent to pounds per 1,000 pounds production.
Source: Weston (1975).

The two-stage solvent extraction system using monochlorobenzene as solvent is only partially developed; the system has not been tested thoroughly on a laboratory scale and only limited pilot-plant testing has been done. The estimated time to complete the development and design and construct a plant is 3 to 4 years.

The available data indicate that only a very limited amount of laboratory test work has been done on the potential carbon adsorption process. The estimated time required to develop and implement this process is 3 to 3.5 years.

No research and development work have been reported on the application of the resin adsorption process to DDT wastewater. The necessary laboratory-scale and pilot-scale process development on this potential process would probably require 1.5 to 2 years. The engineering design and construction of a full-scale treatment facility is estimated to require an additional 1.5 to 2 years. Therefore, the total estimated time required for implementation is 3 to 4 years.

SECTION IV

EFFLUENT DISPOSAL METHODS

A brief discussion of the currently used disposal method and other potential disposal procedures is given in the following subsections.

CURRENT DISPOSAL METHOD

The current disposal method used for effluent from the Montrose Corporation plant (Torrance, California) consists of hauling the DDT-containing liquid waste (acid wastewater and alkaline wastewater) by truck to a Class 1 dump, which is approved for wastes of this kind in California. Sobelman (1975a) has reported that sufficient land is available to permit these landfill operations to continue for at least another 25 years.

EFFLUENT DISPOSAL FOR POTENTIAL WASTEWATER TREATING METHODS

In the solvent extraction, modified Friedel-Crafts process, the effluent is treated with solvent to extract DDT and related compounds and the treated wastewater is then discharged to a plant sewer leading to a municipal sewage treatment plant.

The extracted DDT and related compounds are treated by a modified Friedel-Crafts reaction to condense the pesticide fractions and form insoluble and nonreactive products which can be safely disposed of by a landfill operation or by incineration.

For the two-stage solvent extraction system, the waste consists of treated effluent and separated solids. The effluent would be discharged to the municipal sewage system and the solid waste could be landfilled.

In the carbon adsorption system, the pretreatment operations would include coagulation, sedimentation and/or filtration to remove suspended solids and some of the pesticide. Settled solids or filtration residue could be disposed of by a landfill operation or an incineration step. Clarified wastewater from the pretreatment would be processed in a carbon adsorption system to adsorb pesticide on granules of activated carbon. The spent carbon could be regenerated using a regeneration furnace equipped with a suitable off-gas treatment system or disposed of by incineration and replaced with a fresh charge of carbon. The treated wastewater, which would contain mainly sodium sulfate, could be discharged to a sewer.

For a synthetic (XAD-4) resin adsorption system, the treated effluent disposal could be handled in the same manner as for a carbon adsorption system (i.e., to a sewer line). The wastes generated by separation of suspended solids could be disposed of in a landfill or an incineration operation.

SECTION V

WASTEWATER TREATMENT COST ESTIMATES

COST ESTIMATES FOR PRESENT WASTEWATER DISPOSAL METHOD

Montrose Chemical Corporation has estimated that in 1974 the total cost of hauling and dumping the process wastewater amounted to about $485,500 ($285,500 for alkaline waste and $200,000 for acid waste (Ferguson and Meiners, 1975)).

The operating manpower cost associated with wastewater disposal at the Torrance plant has been estimated by Montrose representatives to be about $39,400/year (Ferguson and Meiners, 1975). The basis of this cost is 4 man-hours per shift, three shifts per day (for 365 days), a labor rate of $5/hr and an overhead factor of 1.8.

On the basis of estimated 1974 production (about 60 million pounds), the unit disposal costs for hauling and dumping were:

for alkaline waste, 0.48¢/lb of product DDT

for acid waste, 0.33¢/lb of product DDT

COST ESTIMATES FOR SOLVENT EXTRACTION/FRIEDEL-CRAFTS PROCESS

Study cost estimates of the type described by Perry and Chilton (1973) (probable error range ± 30%, see Appendix B) were prepared for two average

DDT manufacturing wastewater discharge rates: 30,000 gal/day, which is the current (July 1975) rate for the Montrose plant at Torrance, California (for a current DDT production rate of 60 million pounds per year) and 45,000 gal/day, which is estimated to be the discharge rate which would apply if the production plant were operated at maximum capacity (85 million pounds per year of DDT). On the basis of data provided by Montrose (Sobelman, 1975a and 1975b), the 30,000 gal/day and 45,000 gal/day plants were sized to have treatment capacities about 67% in excess of average daily requirements to allow for reprocessing of some treated wastewater which is off-specification and make-up capability after temporary forced shutdowns for repairs of the wastewater process system.

The cost estimates are based on preliminary cost data reported in unpublished literature by Sweeny (1973) for a 10,000 gal/day plant (see Tables 5 and 6). The capital cost data were adjusted to allow for some additional construction costs (electrical installation, instrumentation, thermal insulation, and engineering and supervision) and for cost increases due to inflation and then used to estimate costs for other plant sizes. The utility costs were updated on the basis of cost data provided by the Montrose plant (Sobelman, 1975a).

Table 5. ESTIMATED CAPITAL COSTS - 10,000 GAL/DAY WASTEWATER TREATMENT PLANT

Item	Costs for July 1973	Costs for June 1975
Process equipment	$16,480	$20,930
Process equipment labor	1,980	2,200
Process materials	9,830	12,480
Process material labor	6,590	7,300
Electrical installation (12% of purchased equipment)[a]	-	2,512
Instrumentation and controls (15% of purchased equipment)[a]	-	3,140
Thermal insulation (8% of purchased equipment)[a]	-	1,674
Home office expense	9,830	11,177
Field expense	6,590	7,315
Engineering and supervision (35% of purchased equipment)[a]	-	7,325
Subtotal (rounded)	$51,300	$76,050
Start-up and modification (10% of subtotal)	5,130	7,600
Contingencies (20% of subtotal)	10,260	15,200
Total (rounded)	$66,690	$98,900

a/ Using cost factors recommended by Peters and Timmerhaus (1968).
Source: Data used in cost estimates were obtained from pilot-plant studies (Sweeny, 1973).

Table 6. ESTIMATED DAILY OPERATING COSTS--10,000 GAL/DAY PLANT

	Costs for July 1973	Costs for September 1975
Utilities		
Steam	$ 31.50[a]	$ 55.13
Power	42.90[a]	75.08
Cooling water	2.40[a]	4.20
Raw materials		
Solvent loss (makeup)	13.30[b]	23.55
Solvent/reactant	5.40[c]	11.88
Catalyst	37.80[b]	65.29
Labor		
One operator (half-time)	97.20	119.33
Total	$230.50	$354.46

a/ These costs were updated using a factor of 1.75 on the basis of cost data provided by Montrose Chemical Corporation (Ferguson and Meiners, 1975).

b/ These raw material costs were updated according to the ratio of prevailing prices for the dates shown (Chemical Marketing Reporter).

c/ The solvent/reactant cost was updated by using a factor of 2.2 as recommended by Montrose Chemical Corporation (Ferguson and Meiners, 1975).

Source: Data used in cost estimates were obtained from pilot-plant studies (Sweeny, 1973).

Cost Adjustments for Inflationary Effect and New Labor Rates

Marshall and Swift (M&S) Equipment Cost indices (1926 = 100), as described in the literature are used for cost adjustments due to inflation for process equipment and materials (these indices are discussed in Appendix B).

For 1973, index = 344.1 (Chemical Engineering, 1975b).

For 1975, index = 437.0 (Chemical Engineering, 1975b).

Ratio of 1975 index to 1973 index is 437.0:344.1 = 1.27

A ratio of annual labor rates reported in the literature is used for updating construction labor costs (Lowenstern, 1973 and 1975). For 1973, the contract construction labor rate is reported to be $6.38/hr and the corresponding rate for March 1975 is $7.11/hr. Thus, the labor rate ratio is 7.11:6.38 or 1.11. For home office expense, the inflation in charges for finance and insurance from 1973 to 1975 is used, i.e., $4.06/hr/3.57 = 1.137 as cost escalation factor (Lowenstern, 1975).

Capital Investment

Data on the capital investment for a 10,000 gal/day waste treatment plant based on information obtained in pilot plant studies, are given by Sweeny (1973). These data were updated as shown in Table 5; the estimated capital investment for the complete treatment system with 10,000 gal/day capacity is $98,900 for June 1975.

The estimated capital investments for the two assumed treatment plant sizes (a) average flow rate of 30,000 gal/day and capacity of 50,000 gal/day, and (b) average flow rate of 45,000 gal/day and capacity of 75,000 gal/day) were calculated using the 0.6 power factor of the ratio of plant sizes (Peters, 1968) as described in Appendix B, and adding estimated costs for additional plant equipment specified by Montrose. The scaled-up costs apply for equipment capable of handling the capacity flow rate. Scaling up by the 0.6 factor gives

For 30,000 gal/day: $\left(\frac{50,000}{10,000}\right)^{0.6} \times \$98,900 = \$259,800$

Information provided by Montrose personnel (Sobelman, 1975a), 1975) indicates that the Envirogenics capital costs (see Table 5, July 1973 data) do not include all equipment which would be required in an actual plant operation. Montrose has pointed out that the 30,000 gal/day wastewater treatment plant would probably require two 100,000 gal. surge storage tanks at a cost of $40,000 each plus flowmeters, pumps, and other miscellaneous equipment (Sobelman, 1975a). The surge tanks would serve to hold raw wastewater during periods when the treatment process is shut down for repair work or to hold treated effluent which does not meet specifications and must be reprocessed. One tank would provide about 3 days' holding capacity for raw wastewater and the other tank would be capable of holding 3 days supply of treated effluent. Thus, the estimated investment for additional installed plant equipment is $80,000 for tanks and $25,000 for flowmeters, pumps, and other miscellaneous

equipment plus 15% contingency for a total of $105,000 x 1.15 or $120,800. Then, the total estimated fixed capital investment is $259,800 + $120,800 or $381,000* (rounded) for a 30,000 gal/day treatment plant.

For 45,000 gal/day: $\left(\frac{75,000}{10,000}\right)^{0.6}$ x $98,900 = $331,300 (base cost)

The 0.6 power factor (see Appendix B) and cost data for the 30,000 gal/day plant were used to estimate the costs for additional process equipment which would be required in an actual plant operation at the 45,000 gal/day flow rate.

Cost for surge tanks: $\left(\frac{45,000}{30,000}\right)^{0.6}$ x $80,000 = $102,000

Cost for flowmeters, pumps, and miscellaneous equipment: $(1.5)^{0.6}$ x $25,000 = $31,900

Cost for miscellaneous equipment: 15% x (102,000 + 31,900) = $20,100.

Total for additional equipment = $102,000 + $31,900 + $20,100 = $154,000 (rounded).

Then the total estimated capital investment for a 45,000 gal/day plant is $331,300 + $154,000 = $485,000 (rounded).

Direct Costs

The estimated direct operating costs for the 30,000 gal/day and 45,000 gal/day plants are calculated as described in the following paragraphs using the base cost data shown in Table 6, taken from a technical

* A Montrose representative has estimated that the capital investment for a 30,000 gal/day treatment plant would be about $750,000 (for September 1975) including a contingency of 30% (Sobelman, 1975a). Swank (1975) has stated that the Montrose estimate of $750,000 is high.

report by Sweeny (1973) on pilot plant studies of the loop-extractor, modified Friedel-Crafts system. These data were adjusted to allow for inflationary effects from 1973 to 1975 as follows.

The utilities costs for 1975 were adjusted by a factor of 1.75 as recommended by the Montrose Chemical Corporation (Sobelman, 1975a).

Except as noted, the raw material costs (see Table 6) were adjusted according to the ratio of chemical prices prevailing in the cost literature (Chemical Marketing Reporter, 1973, 1975) during September 1, 1975, and July 2, 1973.

Solvent Loss (Makeup of Heptane)

For example, on July 2, 1973, the listed price for heptane in the Chemical Marketing Reporter was \$0.225 to \$0.255/gal. average of \$0.24/gal. The corresponding price for September 1, 1975, was \$0.425/gal. The cost adjustment on this basis (using base data from Table 6) is:

$$\$13.30 \times \frac{0.425}{0.24} = \$23.55/\text{day}$$

Solvent/reactant (monochlorobenzene)

A factor of 2.2 was used as recommended by Montrose Chemical Corporation (Sobelman, 1975a),

$$\$5.40 \times 2.2 = \$11.88/\text{day}$$

Catalyst (aluminum chloride, anhydrous)

$$\$37.80 \times \frac{0.285}{0.165} = \$65.29/\text{day}.$$

Raw Materials Costs

These costs are taken to be directly proportional to scale of operation. The base cost data (Sweeny, 1973) in Table 6 for 1975 are used.

			$/Day
30,000 gal/day plant			
Solvent loss	= 3 x $23.55	=	70.65
Solvent/reactant	= 3 x 11.88	=	35.64
Catalyst	= 3 x 65.29	=	195.87
Total			302.16
45,000 gal/day plant			
Solvent loss	= 4.5 x $23.55	=	105.98
Solvent/reactant	= 4.5 x 11.88	=	53.46
Catalyst	= 4.5 x 65.29	=	293.81
Total			453.25

Utility Costs

These costs are taken to be directly proportional to scale of operation. The base cost data in Table 6 are used.

			$/Day
30,000 gal/day plant			
Steam	= 3 x $55.13	=	165.39
Power	= 3 x 75.08	=	225.24
Cooling water	= 3 x 4.20	=	12.60
Total			403.23
45,000 gal/day plant			
Steam	= 4.5 x $55.13	=	248.09
Power	= 4.5 x 75.08	=	337.86
Cooling water	= 4.5 x 4.20	=	18.90
Total			604.85

Operating Labor and Supervision Costs

As suggested by Sweeny (1973), the labor requirement for the 10,000 gal/day plant is one operator half-time. For the 30,000 and 45,000 gal/day plant, it is considered that the labor required increases by the 0.25 power of the scale of operation as described in the literature (Happel and Jordan, 1975) and the labor cost shown in Table 6 is updated.

The operating labor cost is updated using data from the literature (Lowenstern, 1975) and from a site visit (Ferguson and Meiners, 1975) for labor rates in the chemical and allied products industry. On this basis, the hourly earnings are $4.48 for 1973 (Lowenstern, 1975) and $5.50 for July 1975 (Ferguson and Meiners, 1975) and the ratio is 5.50:4.48 = 1.228. Thus, the estimated labor cost (including payroll charges) for the 10,000 gal/day plant in 1975 would be $97.20/day x 1.228 = $119.33/day. The labor cost for the other plants would be:

30,000 gal/day plant: operating labor $= \left(\frac{30,000}{10,000}\right)^{0.25} \times \$119.33 = \$157.05/\text{day}$

45,000 gal/day plant: operating labor $= \left(\frac{45,000}{10,000}\right)^{0.25} \times \$119.33 = \$173.74/\text{day}$

Supervision of direct labor is required. According to cost estimating practice described in the literature (Jelen, 1970) the supervision (including payroll charges) is considered to be 20% of operating labor cost. For 30,000 gal/day, the supervision cost = 0.2 x 157.05 = $31.41/day; and for 45,000 gal/day, supervision cost = 0.2 x 173.74 = $34.75/day.

Laboratory Costs

Laboratory services furnished to support the treatment process operation are estimated at 20% of operating labor cost (Jelen, 1970).

30,000 gal/day: $157.05 x 0.2 = $31.41/day

45,000 gal/day: $173.74 x 0.2 = $34.75/day

Maintenance Costs

The literature (Happel and Jordan, 1975) suggests a factor of 10% of the plant capital investment to cover these costs, where corrosive materials are being processed. The on-stream time per year is 360 days.

30,000 gal/day: $\frac{0.1 \times \$381,000}{360} = \$105.83/\text{day}$

45,000 gal/day: $\frac{0.1 \times \$485,000}{360} = \$134.72/\text{day}$

Payroll Charges

These costs are the result of fringe benefits employees receive in addition to their regular salary. We assume that the base data (Sweeny, 1973) on labor rates used include all of these payroll charges. For example, these base data on labor rates show an hourly rate of $9.36/hr for an operator, while the pay scale was about $5.50/hr in July 1975. It was concluded that the difference accounts for all payroll charges.

Operating Supplies

These supplies are items such as lubricating oil, instrument charts, etc., that are neither raw nor repair materials. The cost of these items is assumed to be 6% of operating labor (Jelen, 1970).

30,000 gal/day: 157.05 x 0.06 = \$9.42/day

45,000 gal/day: 173.74 x 0.06 = \$10.42/day

Indirect costs

The estimated indirect operating costs are calculated as described in the following paragraphs.

Depreciation - This cost estimate uses a straight line, 10-year depreciation charge and assumes all capital assets have a zero salvage value (Jelen, 1970).

30,000 gal/day: $\frac{\$381,000}{10 \times 360} = \$105.83/\text{day}$

45,000 gal/day: $\frac{\$485,000}{10 \times 360} = \$134.72/\text{day}$

Property taxes - Property taxes are taken to be 2% of investment cost (Jelen, 1970).

30,000 gal/day: $\frac{\$381,000 \times 0.02}{360} = \$21.17/\text{day}$

45,000 gal/day: $\frac{\$485,000 \times 0.02}{360} = \$26.94/\text{day}$

Insurance - Insurance for each plant is assumed to be a typical value of 1% of investment cost (Jelen, 1970).

30,000 gal/day: $\frac{\$381,000 \times 0.01}{360} = \$10.58/\text{day}$

45,000 gal/day: $\frac{\$485,000 \times 0.01}{360} = \$13.47/\text{day}$

Capital cost - The annual rate of capital cost (or interest) is taken to be 6.3% for a period of 10 years as suggested by interest rates reported in the current cost literature (Chemical Engineering, 1975a) and explained in the Appendix B.

On this basis, the annual interest can be computed as follows:

30,000 gal/day: $\frac{\$381,000 \times 0.063}{360} = \$66.68/\text{day}$

45,000 gal/day: $\frac{\$485,000 \times 0.063}{360} = \$84.88/\text{day}$

Plant overhead - This is a charge to the costs of a processing facility which is not chargeable to any particular operation and is normally charged on an allotted basis. Overhead includes cost items such as plant supervision, plant guards, janitors, administrative offices, accounting, purchasing, etc. Plant overhead can range from 40 to 60% of direct labor costs or 15 to 30% of direct costs (Jelen, 1970). Assume that plant overhead is 20% of direct costs in this estimate (see Table 5).

30,000 gal/day: $0.2 \times \$1,041 = \$208.20/\text{day}$

45,000 gal/day: $0.2 \times \$1,446 = \$289.20/\text{day}$

Costs for landfill of solid wastes - The costs for on-site landfill of the solid wastes (see Figure 2) produced by the extraction operation and the Friedel-Crafts reaction are estimated below.

Considering (a) that the total discharge of suspended solids, DDT and metabolites is directly proportional to wastewater discharge rate, and (b) treatment process efficiency remains unchanged, the discharge rates of solid waste which would apply for the 30,000 gal/day and the 45,000 gal/day wastewater flow rates are as follows.

For the 30,000 gal/day waste treatment plant, the estimated quantity of dry solid waste (see Figure 2, which applies for 1.5 gal/min or 2,160 gal/day), is:

$\frac{30,000}{2,160} \times (16 + 6.3) \times 24 = 7,433$ lb/day or 3.7 tons/day of solid waste

For 45,000 gal/day: $\frac{45,000}{30,000} \times 3.7 = 5.6$ tons/day

McMahan (1975) indicates that solids can be disposed of in simple landfills at a cost in the range of $3 to $10/ton of solids. In this study the average cost is taken to be $6/ton of solids. On this basis the daily costs are:

For 30,000 gal/day: 3.7 x $6 = $22.20/day

For 45,000 gal/day: 5.6 x $6 = $33.60/day

Summary of costs - A summary of the estimated waste treatment process operating costs is shown in Table 7. The estimated capital investments are $381,000 and $485,000 for the 30,000 and the 45,000 gal/day plants. The total operating costs for the 30,000 and the 45,000 gal/day plants are estimated to be $1,475/day ($531,000/year) and $2,029/day ($730,400/year), respectively. The estimated unit operating cost is 0.89¢/lb of DDT for the 30,000 gal/day plant and 0.86¢/lb for the 45,000 gal/day plant.

The reported July 1974 cost for hauling and dumping of all segregated alkaline wastewater from the Montrose plant is about 0.48¢/lb of product DDT (Ferguson and Meiners, 1975). A comparison with the cost data shown above indicates that the operating cost for the 30,000 gal/day wastewater treatment plant would be about 85% more than the total hauling and dumping cost. The estimated unit treatment cost for the 45,000 gal/day unit would be about 79% higher than the unit hauling and dumping cost.

Table 7. SUMMARY OF ESTIMATED DAILY OPERATING COSTS FOR WASTE TREATMENT BY SOLVENT EXTRACTION/FRIEDEL-CRAFTS METHOD ($/Operating Day; 360 Operating Days/Year)

	Plant size	
	30,000 (gal/day)	45,000 (gal/day)
Direct costs		
Raw materials	$ 302.16	$ 453.25
Operating labor[a/]	157.05	173.74
Supervision of labor[a/]	31.41	34.75
Maintenance	105.83	134.72
Operating supplies	9.42	10.42
Utilities	403.23	604.85
Laboratory charges	31.41	34.75
Subtotal (rounded)	$1,041/day	$1,446/day
Indirect costs		
Depreciation	$ 105.83	$ 134.72
Property taxes	21.17	26.94
Insurance	10.58	13.47
Capital cost (interest)	66.68	84.88
Plant overhead	208.20	289.20
Subtotal (rounded)	$ 412/day	$ 549/day
Cost for landfill of treatment solid wastes	$22/day	$34/day
Total operating cost (rounded)	$1,475/day	$2,029/day
Unit operating cost		
Cost, $/1,000 gal. effluent	$49.17	$45.09
Cost, cents/lb of DDT product[b/] (rounded)	0.89[c/]	0.86[d/]

a/ These costs include payroll charges.

b/ In July 1975 the sales price for DDT was 50¢/lb (Ferguson and Meiners, 1975).

c/ For DDT production rate of 60 million pounds per year (Ferguson and Meiners, 1975).

d/ For a possible DDT production rate of 85 million pounds per year (i.e., the reported plant production capacity at the Montrose, Torrance, California plant (Sobelman, 1975b).

COST ESTIMATES FOR TWO-STAGE SOLVENT EXTRACTION WITH MCB

Estimates of the capital investment and the treatment cost for this process on the basis of treating 30,000 gpd of alkaline wastewater are given in the Montrose grant application (1975). These cost data for 1975 are summarized below.

Total capital investment	$101,000
Treatment cost (including charges for operators, laboratory technicians, extractants, maintenance and supplies, and amortized capital investment)	$229.89/day or $82,800/year
Unit treatment costs:	
Cost, ¢/lb of DDT product	0.14 (rounded)
Cost, $/1,000 gal. of treated affluent	7.66

ORDER-OF-MAGNITUDE COST ESTIMATES FOR CARBON ADSORPTION AND SYNTHETIC RESIN ADSORPTION TREATMENT PROCESSES

Order-of-magnitude cost estimates were prepared for two treatment methods (carbon adsorption and synthetic resin adsorption) which have some promise for treatment of DDT wastewater. As pointed out by Ferguson and Meiners (1974) neither of these potential processes have been performed under conditions which approximate actual use or on a scale sufficient to permit accurate determination of operating conditions or costs. These estimates are presented below for conceptual plants processing a maximum of 50,000 gpd (average of 30,000 gpd) of alkaline wastewater. A conceptual flow diagram for the resin system and the activated carbon system is shown in Figure 7.

Since each alternate system requires both a sedimentation and filtration process, and the costs of these two processes are identical for each system, these processes are examined first. Following a discussion of the treatment and filtration processes, each alternate system is discussed separately. The cost estimates for the system are then summarized and totaled.

Estimated Capital Investment Costs

Estimated costs for capital investment are discussed briefly in the following subsections.

Sedimentation Process Costs - The sedimentation process will allow large solid undissolved particles to settle out of the wastewater prior to filtration. The installed capital cost for a system to handle 34.7 gpm (50,000 gpd) is estimated from a report by Blecker and Nichols (1973). Extrapolation of the graph on page 126 of their report shows that the installed cost (1972 dollars) of a sedimentation system to handle a flow rate of 50,000 gpd is about $6,000. This installed system for the sedimentation process includes the purchased cost of tanks, motors and drives, pumps, piping, concrete, structural steel, instrumentation, electrical, paint, and indirect costs.

Since these installed costs are given in 1972 dollars, the costs must be escalated to April 1975 prices. To do this, the Chemical Engineering (CE) Plant Cost Index is used. Chemical Engineering (1975a) reports that

in 1972, this index was 137.2 but had risen to 180.6 by April 1975. Therefore, the estimated installed capital cost (rounded) of each sedimentation process system is:

$$(\$6,000)\left(\frac{180.6}{137.2}\right) = \sim \$8,000$$

Blecker and Nichols (1973) reported that the annual maintenance cost for the process is about 15% of the installed cost or $1,200. This report also states that the process requires no operator attention. However, operating labor is estimated at 3 hr/day for routine checks on the process to see that it functions properly.

Periodically, the sludge must be removed and landfilled or incinerated. The cost of sludge removal is included in the maintenance cost and the cost for landfilling of this sludge is estimated separately.

Blecker and Nichols (1973) report that the expected life of these systems is between 25 and 60 years, and the life is taken to be 40 years for the purpose of depreciation of the installed costs (see Appendix B).

Filtration Process Costs - The wastewater is pumped from the sedimentation process (at the same rate as the inflow) into a sand filter to further remove suspended solids. The flow rate through a sand filter can vary depending upon the design, but a typical flow rate according to Envirogenics Systems Company (1973) is about 3.2 gal/ft^2/min. Thus, the required filter area for the 50,000 gpd (34.7 gpm) flow is about 11 ft^2. A back-up filter is required for each process since the plant operates 24 hr/day.

The installed cost for the filtration process is obtained from a report by Blecker and Nichols (1973). The graph on page 66 of their report shows that the installed cost of a 11-ft^2 filter is $22,000. Since this cost is in 1972 dollars, the April 1975 cost (rounded) is:

$$2 \times \$22{,}000 \left(\frac{180.6}{137.2}\right) = \sim\$58{,}000$$

Blecker and Nichols (1973) reported that the annual maintenance cost for each process is about 5% of the installed cost or $2,900. This report states that the filtration process requires no operator attention. However, operating labor is estimated at 3 hr/day for routine checks on the process to see that it functions properly.

Periodically, the filters are backwashed into a sump to remove the filtered solids. Removal of the sludge from the pit is included in the maintenance costs given above. The cost of land for landfill or the cost of incineration of the sludge is excluded in this estimate.

Blecker and Nichols (1973) reported that the expected life of the filtration process is between 10 and 20 years and is taken to be 15 years for the purpose of depreciation of the installed costs (see Appendix B).

Carbon Adsorption Process - The installed investment cost for a carbon adsorption process can be estimated from data in a report by Zimmerman (1971). In Figure 2 (p. 12) of the Zimmerman report, extrapolation of the graph shows that the cost for a 50,000 gpd system was about $80,000 in September 1973. The Chemical Engineering Plant Cost Index was used to escalate this cost to 1975 prices. Therefore, the estimated installed cost for the carbon adsorption system is:

$$\$80,000 \times \left(\frac{180.6}{130.2}\right) = \sim\$111,000$$

<u>XAD-4 Resin Adsorption Process</u> - Kennedy (1973) has reported on the costs for treatment of effluent from manufacture of chlorinated pesticides with an Amberlite XAD-4 system. These costs, which have been updated in an MRI Interim Report on wastewater treatment technology documentation (July 1975) and which apply for an influent of 200 ppm total chlorinated pesticides, 150,000 gpd, run to 1 ppm leakage are as follows for June 1975.

Capital investment (uninstalled equipment)	$126,400
Installation costs at 46% of purchased equipment cost as reported by Marks (September 1974)	58,100
Estimated total investment	$184,500

This cost is for a 150,000 gpd flow rate and must be scaled down to 50,000 gpd. Using the "six-tenths factors" (see Appendix B) for scaling down the estimated installed cost for the XAD-4 resin process gives:

$$\text{Cost} \times \left(\frac{150,000}{50,000}\right)^{0.6} = \$184,500$$

$$\text{Cost} = \left(\frac{184,500}{1.935}\right) = \$95,300$$

The following tabulation of cost data summarizes and totals the capital investment for the two wastewater treatment systems (50,000 gpd flow rate).

	Capital Investment, 1975 $	
	XAD-4 Resin System	Carbon Adsorption System
Coagulation and sedimentation	8,000	8,000
Filtration	58,000	58,000
XAD-4 resin system	95,000	-
Carbon adsorption system	-	111,000
Subtotal	161,000	177,000
Contingency, 30%	48,000	53,000
Total capital investment	$209,000	$230,000

Operating Costs

Sedimentation and Filtration - The operating cost for a coagulation and sedimentation process can be estimated from cost data published by Zimmerman (1971). On page 13 of the Zimmerman report the cost data show by extrapolation a treatment cost of 5.5¢/1,000 gal. of wastewater.

Other data by Zimmerman (1971) show by extrapolation that the treatment cost for filtration through sand is about 3.3¢/1,000 gal.

Combining these unit costs and updating according to escalated operating labor costs from 1971 to 1975 (as an approximation of overall unit cost ascalation) gives the following total unit cost.

Estimated base cost for sedimentation, coagulation and filtration is 5.5 + 30 or 35.5¢/1,000 gal. of wastewater.

Production worker pay rates for chemical industries have advanced from $4.00/hr in October 1971 to $5.41 in July 1975 (Monthly Labor Reviews, February 1972, Vol. 95, No. 2, p. 111 and October 1975, Vol. 98, No. 10, p. 96). Thus, the labor rate escalation factor is 5.41/4.00 = 1.353. Applying this factor to update unit costs gives:

35.5 x 1.353 = 48¢/1,000 gal.

Then 0.48 x 30,000 gpd/1,000 = $14.40 per operating day (350 operating days/year)

Carbon Adsorption Process - The overall treatment cost for the carbon adsorption system can be estimated from a report by Cywin (1973). In the Cywin report (p. 319), extrapolation of the graph shows that the operating cost for a 30,000 gpd average flow rate system is about $1.50/1,000 gal. in September 1973. Updating this cost according to escalated labor costs from 1973 to 1975 (as an approximation of overall unit cost escalation) gives the following total unit cost.

Production worker pay rates for chemical industries have advanced from $4.48/hr in 1973 to $5.43/hr in August 1975 (Survey of Current Business April 1975 and Monthly Labor Review October 1975). Thus, the labor rate escalation factor is 5.43/4.48 or 1.212; applying this factor to update unit costs gives:

$1.50/1,000 gal. x 1.212 = $1.82/1,000 gal. effluent

Then the estimated total operating costs for the complete carbon adsorption system is:

	$/1,000 Gal. Effluent (1975)
Cost for coagulation and sedimentation and filtration	0.48
Cost for carbon adsorption system	1.82
Total	2.30

Then, the estimated daily operating cost is:

$$\$2.30 \times \frac{30,000}{1,000} = \$69/\text{operating day.}$$

The annual cost is 69 x 350 = $24,200/year

For the wastewater flow rate of 30,000 gpd the corresponding production rate for DDT product is 60,000,000 lb/year (Ferguson and Meiners, 1975). The estimated treatment cost per pound of product is:

$$\frac{\$24,200/\text{year}}{60,000,000\ \text{lb/year}} \times 100 = \sim 0.04¢/\text{lb DDT}$$

The XAD-4 Resin Process - The estimated operating cost for this process is based on cost data in the literature and upon data reported by companies using this process for control of other pesticide wastewaters.

The material costs are essentially the costs for Amberlite XAD-4 resin and the isopropyl alcohol used to regenerate the contaminated resin columns. Velsicol (Vitalis, 1975) estimates that the cost of the resin to charge the resin columns for a 100-gpm system is $63,000 (current prices) and that the resin has an operating lifetime of 5 years. In this estimate the XAD-4 resin is depreciated with the capital equipment. Rohm and Haas Company (Kennedy, 1973) estimates that the cost of the regeneration isopropyl alcohol makeup is $30,000/year (1972 prices) for a 100-gpm process. The average 1972 price of isopropyl alcohol was about $0.45/gal (Oil, Paint and Drug, 1972) and the current price is $0.70/gal (Chemical Marketing Reporter, 1975), so that the isopropyl alcohol cost in April 1975 prices is (0.70/0.45) ($30,000) or $46,700/year for a 100-gpm plant.

Using a linear relationship to scale down the resin and isopropyl alcohol required for the 30,000 gpd (20.8 gpm) process flow rate gives:

Resin:

$$63{,}000\left(\frac{20.8}{100}\right) = \$13{,}000$$

Isopropyl alcohol:

$$(\$46{,}700/\text{year})\left(\frac{20.8}{100}\right) = \$9{,}700/\text{year}$$

Blecker and Nichols (1973) reported that the annual maintenance cost for each process is about 5% of the installed equipment cost, or $4,800.

The operating labor time is estimated at 9 man-hours per day on a 24 hr/day operating basis for the 100-gpm system based upon the estimates given for ion exchangers (Blecker and Nichols, 1973). This gives a requirement of 3,150 man-hours annually (based on 350 operating days per year). To scale this labor time down to the 20.8 gpm process flow rates, the "one-fourth factor" is used (Popper, 1970). This method (see Appendix B) gives the estimated operating labor time for each process as follows:

$$\text{Operating labor} \times \left(\frac{100}{20.8}\right)^{0.25} = 3{,}150 \text{ man-hours}$$

$$\text{Operating labor} = 2{,}130 \text{ man-hours}$$

Rohm and Haas (Kennedy, 1973) estimates that the expected life of the XAD-4 resin process equipment is 10 years and that the life of XAD-4 resin charge is 5 years for the purpose of depreciation of the installed costs of the capital equipment and resin.

The hourly earnings of production or nonsupervisory workers in the chemical and allied products industry was $5.18/hr in March 1975 (Monthly Labor Review, 1975). For April 1975, the estimated wage rate is $5.20/hr. This gives an annual operating labor cost for the resin system as follows:

2,130 man-hour per year at $5.20/hr or ~$11,000

Supervision is normally estimated as 20% of operating labor (Jelen, 1970). On this basis, the cost is: 0.20 x $11,000 = ~ $2,200.

Payroll Charges - Payroll charges (fringe benefits) are taken to be 30% of wages paid to both labor and supervision; on this basis, the cost is:

0.30 x (11,000 + 2,200) = ~ $4,000

Maintenance and Operating Supplies - Maintenance cost has been determined previously for the resin process to be $4,800/year.

Operating supplies are estimated as 6% of labor costs (Jelen, 1970). This amounts to an annual cost of:

0.06 x 11,000 = ~ $700

Utilities and Laboratory Services - The utilities required for the resin process is primarily electrical power. The estimated annual electrical power for a 100 gpm XAD-4 resin system is $650 (Marks, September 1974). Scaling this cost by direct proportion to effluent flow rates gives:

$$\frac{20.8}{100} \times 650 = \sim \$140/\text{year}$$

Laboratory services are estimated as 20% of labor cost (Jelen, 1970). Thus, 0.20 x $11,000 = $2,200.

Depreciation - The cost estimate uses straight line depreciation and assumes all capital assets have a zero salvage value (see Appendix B). The capital investment costs and expected lives of all depreciable assets have been previously given and are used below to determine the annual depreciation cost for XAD-4 resin system (rounded to nearest $100).

	Life (years)	Annual Depreciation Cost ($)
XAD-4 resin process equipment	10	9,500
XAD-4 resin charge	5	2,600
Total		12,100

Property Taxes, Insurance, and Capital Costs - Property taxes, insurance and capital costs are estimated as a percentage of the installed capital equipment cost. These costs are calculated and reported in this report separately to show the cost breakdown of these three items.

Jelen (1970) reports that property taxes are taken to be 2% of investment cost, and that insurance is generally about 1% of investment cost. Capital cost (or interest) is a charge to finance the investment expenditures. The annual rate of interest (see Appendix B) has varied widely in the recent past and is taken to be 10% for 10 years due to current market interest rates and current cost literature (Chemical Engineering, 1975b). As shown in Appendix B, this is equivalent to an annual interest rate of 6.3% of capital investment.

Using the above percentage gives the following indirect costs:

Property taxes and insurance: 3% of $95,000 = ~$2,900

Capital cost: 6.3% of $95,000 = ~$6,000

Plant Overhead - Jelen (1970) reports that overhead can range from 40 to 60% of direct labor costs. The plant overhead is estimated at 50% of direct labor or 0.5 x $11,000 = $4,500.

Costs for Landfill of Solid Wastes - The costs for on-site landfill of the solid wastes produced by the extraction process are estimated below. These costs are the same for the resin adsorption system and the carbon adsorption system because the processes are identical for sedimentation and filtration. No specific process data are available concerning the quantity of solids which would be removed during the coagulation, settling and filtration of the raw DDT wastewater in the conceptual treatment systems for carbon adsorption and synthetic resin adsorption. For purposes of this estimate, the solid waste quantity is taken to be the same as the suspended solids separated by settling in the solvent extraction process (Sweeny, 1973).

For the 30,000 gal/day waste treatment plant the estimated quantity of dry solid waste (see Figure 2, solid waste item E which applies for 1.5 gal/min or 2,160 gal/day) is:

$$\frac{30,000}{2,160} \times (16 \times 24) = 5,340 \text{ lb/day or } 2.7 \text{ tons/day of solid waste}$$

McMahan (1975) indicates that solid wastes can be disposed of in simple landfills at a cost in the range of $3 to $10/ton. In this study, the average cost is taken to be $6/ton of solids. On this basis the daily costs are:

2.7 x $6 = $16.20/day

and the annual cost is 360 x $16.20 = $5,800.

Operating Costs for Resin Adsorption Process - The total estimated annual operating cost for the resin adsorption process, exclusive of the cost for the sedimentation and filtration processes is:

Direct Costs	
Isopropyl alcohol	$ 9,700
Labor	11,000
Supervision	2,200
Payroll charges	4,000
Maintenance and operating supplies	5,500
Utilities and laboratory services	2,300
Indirect Cost	
Depreciation	12,100
Property taxes and insurance	2,900
Capital cost	6,000
Plant overhead	5,500
Total	$61,200

Summary of Costs - The total estimated costs of the carbon adsorption system and the resin adsorption system are given in Table 8. The table shows the total installed capital equipment costs (in 1975 dollars) for the two systems are: (a) carbon adsorption system, $230,000; and (b) resin adsorption system, $209,000. The estimated total annual operating costs are:

(a) $34,900; and (b) $71,900, respectively. The estimated unit cost (per 1,000 gal. of effluent) of treating the DDT wastewater effluent is: (a) $3.33; and (b) $6.85. The estimated unit operating costs to treat DDT wastewater per pound of DDT product (based on 60,000,000 lb of annual production) are: (a) 0.06¢; and (b) 0.12¢, respectively.

Table 8. TOTAL INVESTMENT AND ANNUAL OPERATING COSTS FOR COMPLETE CARBON ADSORPTION AND RESIN ADSORPTION SYSTEMS

Cost item	Carbon adsorption system	Resin adsorption system
Total installed capital equipment cost (1975 $)	$230,000	$209,000
Annual operating costs (1975 $)		
Coagulation, sedimentation and filtration processes	5,000	5,000
Adsorption processes	24,200	61,200
Landfill of solid wastes	5,800	5,800
Total ($/year)	$35,000	$72,000
Unit operating costs		
Cost, $/1,000 gal. effluent	3.33	6.85
Cost, ¢/lb of DDT (rounded) (60,000,000 lb/year of DDT)	0.06	0.12

REFERENCES

Air/Water Pollution Report, p. 285, July 12, 1971.

Atkins, P. R., "The Pesticide Manufacturing Industry: Current Waste Treatment and Disposal Practices," U.S. Government Printing Office, Washington, D.C., p. 32, January 1972.

Chem. Eng., p. 89, July 21, 1975a.

Chem. Eng., p. 168, September 1, 1975b.

Chemical Marketing Reporter, July 2, 1973.

Chemical Marketing Reporter, September 1, 1975.

Dreyfuss, J., Los Angeles Times, October 7, 1970 and March 18, 1971.

Environmental Protection Agency, "DDT--A Review of Scientific and Economic Aspects of the Decision to Ban Its Use as a Pesticide," Report prepared for Committee on Appropriations, U.S. House of Representatives, U.S. Environmental Protection Agency, Washington, D.C., 300 pages, July 1975.

Ferguson, T. L., and A. F. Meiners, "Wastewater Management Review No. 4, DDT," EPA Contract No. 68-01-2579, May 21, 1974.

Ferguson, T. L., and A. F. Meiners, Site Visit to Montrose Chemical Corporation Plant at Torrance, California, EPA Contract No. 68-01-3524, MRI Project No. 4127-C, July 17, 1975.

Grindley, J., "Effluent Disposal in DDT Manufacture," The Industrial Chemist, Vol. 26, No. 310, pp. 467-469, November 1950.

Hager, D. G., and J. L. Rizzo, "Removal of Toxic Organics from Wastewater by Adsorption with Granular Carbon," Paper presented at the Environmental Protection Agency Technology Transfer Session on Treatment of Toxic Chemicals, Atlanta, Georgia, April 19, 1974.

Happel, J., and D. J. Jordan, Chemical Process Economics, 2nd Ed., Marcel Dekker, Inc., New York (1975).

Jelen, F. C., Cost and Optimization Engineering, McGraw-Hill Book Company, New York (1970).

Lawless, E. W., et al., "The Pollution Potential in Pesticide Manufacture," prepared by Midwest Research Institute, EPA Technical Studies Report TS-00-72-94, U.S. Government Printing Office, Washington, D.C., June 1972.

Lowenstern, H., Executive Editor, Monthly Labor Review, p. 96, May 1975.

Lowenstern, H., Executive Editor, Monthly Labor Review, p. 96, May 1973.

McMahan, J. R., Working Memorandum 2 to David G. Davis, EPA, Case 78493, October 9, 1975.

Miller, et al. (to Diamond Alkali Company), U.S. Patent 2,932,672, April 12, 1960.

Montrose Chemical Corporation Application for Demonstration Grant From EPA, "Demonstration of a DDT Manufacturing and Processing Plant Waste Treatment System," I.D. No. R804293-01, August 8, 1975.

Perry, R. H., and C. H. Chilton, Chemical Engineers Handbook, 5th Ed., McGraw-Hill Book Company, New York, New York (1973).

Peters, M. S., and K. D. Timmerhaus, Plant Design and Economics for Chemical Engineers, 2nd Ed., McGraw-Hill Book Company (1968).

Porter, D. J., "Chlorine, Its Manufacture, Properties, and Uses," Chapter 20, ACS Monograph No. 154, Reinhold Publishing Corporation, New York (1962).

Robeck, G. G., et al., "Effectiveness of Water Treatment Process in Pesticide Removal," J. Amer. Water Works Assn., Vol. 57, pp. 181 (1965).

Schmidt, T. T., R. W. Risebrough, and F. Gress, Bull. Environ. Contam. Toxicol., Vol. 6, pp. 235 (1971).

Sigworth, E. A., "Identification and Removal of Herbicides and Pesticides," J. Amer. Water Works Assn., Vol. 57, No. 8, pp. 1016-1022, August 1965.

Sobelman, M., Vice President of Operations, Montrose Chemical Corporation, Torrance, California, telephone communication to C. E. Mumma and A. F. Meiners, September 12 and 22, 1975a.

Sobelman, M., Vice President of Operations, Montrose Chemical Corporation, Torrance, California, telephone communication to C. E. Mumma, October 17, 1975b.

Swank, R. R., Jr., Acting Chief, Industrial Pollution Branch, Southeast Environmental Research Laboratory, Athens, Georgia, Site Visit by A. F. Meiners and C. E. Mumma, September 29, 1975.

Sweeny, K. H., et al., Envirogenics Systems Company, El Monte, California, "Development of Treatment Process for Chlorinated Hydrocarbon Pesticide Manufacturing and Processing Wastes," prepared for Office of Research and Monitoring, EPA Contract No. 68-01-0083, July 1973.

Sweeny, K. H., Envirogenics Systems, El Monte, California, telephone communication with C. E. Mumma, October 6, 1975.

Whitehouse, J. D., "A Study of the Removal of Pesticides from Water," University of Kentucky Water Resources Institute, Research Report No. 8, December 1967.

Weston, R. F., Inc., Draft, "Development Document for Effluent Limitations Guidelines and Standards of Performance - Miscellaneous Chemicals Industry," EPA Contract No. 68-01-2932, February 1975.

APPENDIX B

DEFINITION OF TERMS AND DISCUSSION OF CONVENTIONAL ENGINEERING PRACTICES USED IN ESTIMATING COSTS OF PESTICIDE WASTEWATER TREATMENT PROCESSES

Several terms used in the cost estimates require further definition and have been placed in this appendix to avoid a lengthy discussion in the text of the report. The terms which are defined and discussed in this appendix are (a) limits of error for cost estimates, (b) cost indexes, (c) six-tenths factor, (d) one-fourth factor, (e) payroll charges, (f) operating supplies, (g) control laboratory costs, (h) maintenance and repairs, (i) depreciation, (j) capital cost, (k) plant overhead, and (l) contingency for capital investment.

LIMITS OF ERROR FOR COST ESTIMATES

The probable limits of error for the study cost estimates in this report range from 30% above to 30% below the actual costs. Study cost estimates are commonly used to estimate the economic feasibility of a project before expending significant funds for piloting, market studies, land surveys, and requisitions. They may be off by 30% but they can be prepared at relatively low costs using minimum data as follows (see Figure A-1).

Location of site;

Rough sketches of process flow;

Preliminary sizing and material specifications of equipment;

Approximate sizes of buildings and structures;

Rough quantities of utilities;

Preliminary piping;

Preliminary motor list; and

Engineering and drafting man-hours.

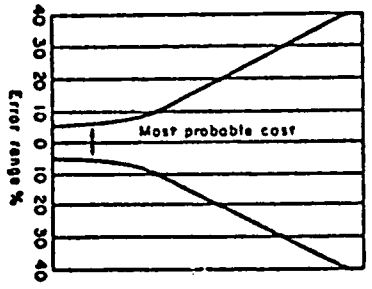

Required information	Firm estimate ±5% range	Project control estimate ±10% range	Budget authorization estimate ±20% range	Study estimate ±30% range	Order-of-magnitude estimate >±30% range	
Location	●	●	●	●		Site
General description	●	●	●			
Soil bearing	●	●	●			
Location & dimensions R.R., roads, impounds, fences	●	●	●			
Well-developed site plot plan & topographical map	●	●				
Well-developed site facilities	●					
Rough sketches				●		Process flow sheet
Preliminary			●			
Engineered	●	●				
Preliminary sizing & material specifications			●	●		Equipment list
Engineered specifications	●	●				
Vessel sheets	●	●				
General arrangement						
(a) Preliminary		●	●			
(b) Engineered	●					
Approximate sizes & type of construction			●	●		Building and structures
Foundation sketches		●	●			
Architectural & construction	●	●	●			
Preliminary structural design			●			
General arrangements & elevations	●	●				
Detailed drawings	●					
Rough quantities (steam, water, electricity, etc.)				●		Utility requirements
Preliminary heat balance			●			
Preliminary flow sheets			●			
Engineered heat balance	●	●				
Engineered flow sheets	●	●				
Well-developed drawings	●					
Preliminary flow sheet & specifications			●	●		Piping
Engineered flow sheets	●	●				
Piping layouts & schedules	●					
Rough specifications			●			Insulation
Preliminary list of equipment & piping to be insulated		●				
Insulation specifications & schedules	●	●				
Well-developed drawings or specifications	●					
Preliminary instrument list			●			Instrumentation
Engineered list & flow sheet	●	●				
Well-developed drawings	●					
Preliminary motor list—approximate sizes			●	●		Electrical
Engineered list & sizes	●	●				
Substations, number & sizes, specifications	●	●	●			
Distribution specifications	●					
Preliminary lighting specifications			●			
Preliminary interlock, control, & instrument wiring specs.		●				
Engineered single-line diagrams (power & light)	●	●				
Well-developed drawings	●					
Engineering & drafting	●	●	●	●		Man-hours
Labor by craft	●					
Supervision	●					
Product, capacity, location & site requirements. Utility & service requirements. Building & auxiliary requirements. Raw materials & finished product handling & storage requirements.					●	Project scope standard processes

Figure A-1. Estimating Information Guide

COST INDEXES (Peters and Timmerhaus, 1968)

Most cost data which are available for immediate use in a preliminary or predesign estimate are based on conditions at some time in the past. Because prices may change considerably with time, due to changes in economic conditions, some method must be used for converting costs applicable at a past date to equivalent costs that are essentially correct at the present time. This can be done by the use of cost indexes.

A cost index is merely a number for a given year showing the cost at that time relative to a certain base year. If the cost at some time in the past is known, the equivalent cost at the present time can be determined by multiplying the original cost by the ratio of the present index value to the index value applicable when the original cost was obtained.

Present cost =

$$\text{original cost} \; \frac{\text{index value at present time}}{\text{index value at time original cost was obtained}}$$

Cost indexes can be used to give a general estimate, but no index can take into account all factors, such as special technological advancements or local conditions. The common indexes permit fairly accurate estimates if the time period involved is less than 10 years.

Many different types of cost indexes are published regularly.

Engineering News-Record Construction Cost Index

Relative construction costs at various dates can be estimated by use of the Engineering News-Record construction index. This index shows the variation in labor rates and materials costs for industrial construction. It employs a composite cost for 2,500 lb of structural steel, 1,088 fbm of lumber, 6 bbl of cement, and 200 hr of common labor. The index is usually reported on one of three bases: an index value of 100 in 1913, 100 in 1926, or 100 in 1949.

Marshall and Swift (Formerly Marshall and Stevens) Equipment-Cost Indexes

The Marshall and Stevens equipment indexes are divided into two categories. The all-industry equipment index is simply the arithmetic average of the individual indexes for 47 different types of industrial, commercial, and housing equipment. The process-industry equipment index is a weighted average of eight of these, with the weighting based on the total product value of the various process industries. The percentages used for the weighting in a typical year are as follows: cement, 2; chemicals, 48; clay products, 2; glass, 3; paint, 5; paper, 10; petroleum, 22; and rubber, 8.

The Marshall and Stevens indexes are based on an index value of 100 for the year 1926. These indexes take into consideration the cost of machinery and major equipment plus costs for installation, fixtures, tools, office furniture and other minor equipment.

Chemical Engineering Plant Construction Cost Index

Construction costs for chemical plants form the basis of the Chemical Engineering plant construction cost index. The four major components of this index are weighted in the following manner: equipment, machinery, and supports, 61; erection and installation labor, 22; buildings, materials, and labor 7; and engineering and supervision manpower, 10. The major component, equipment, is further subdivided and weighted as follows: fabricated equipment, 37; process machinery, 14; pipe, valves, and fittings, 20; process instruments and controls, 7; pumps and compressors, 7; eletrical equipment and materials, 5; and structural supports, insulation, and paint, 10. All index components are based on 1957 to 1959 = 100.

SIX-TENTHS FACTOR (Perry and Chilton, 1973)

Cost estimates in this report are given for processes that require scaling up from a given capacity to a larger capacity (e.g., 100 gpm to 300 gpm and 600 gpm). Equipment size and costs were shown to correlate fairly well by the logarithmic relationship known as the "six-tenths factor." The simple form of this method is:

$$C_n = r^{0.6}\ C$$

where C_n is the new plant cost, C is the previous plant cost, and r is the ratio of the new capacity to the old capacity.

This method is the best available for estimating the cost of the systems in this report since each system involves multiple pieces of equipment, piping, instrumentation, etc. The exponent actually ranges from

0.45 to 1.15 for different pieces of equipment, but in complex systems, such as the ones described in this report, estimating the new capacity cost for each piece of equipment is beyond the scope of this study.

Therefore, when scaling the costs up, for example, from a 100 gpm plant size to other plant sizes, the exponent 0.6 is used as an approximation of the scale-up factor for the entire system. In each case, some error may be involved using this method, but no other method is available for this study.

ONE-FOURTH FACTOR (Peters and Timmerhaus, 1968)

The "one-fourth factor" uses the same principle as the "six-tenths factor" with the exception that the exponent 0.25 is used instead of 0.6. This factor is used to scale up labor requirements from one plant size to a larger plant size, and takes into account the fact that larger plant sizes require less than proportional labor forces due to economies of scale.

PAYROLL CHARGES

These costs are the result of the many fringe benefits employees receive in addition to their salaries. Recent emphasis on these benefits in labor contracts make this cost substantial and it is steadily increasing with time. The sum of fringe benefits may add between 15 and 40% to the wage rate of employees (Perry and Chilton, 1973), and the percentage varies widely from company to company. In this report, payroll charges (fringe benefits) are estimated to be 30% of the wages paid to both labor and supervision.

OPERATING SUPPLIES

Operating supplies are items such as lubricating oil, instrument charts, etc., that are neither raw nor repair materials. The cost of these items is typically about 6% of operating labor (Jelen, 1970).

CONTROL LABORATORY COSTS

Depending on company practice and the type of project, operating costs may include several charges by other units of the company, e.g., charges by a control laboratory.

Laboratory costs may be estimated as a percentage of operating labor cost, in the range of 3 to 10%, but the complex situations as high as 20% (Jelen, 1970). Since treatment systems require more laboratory support than typical production processes, in this report the cost of these services is estimated to be 20% of operating labor costs.

MAINTENANCE AND REPAIRS (Peters and Timmerhaus, 1968)

A considerable amount of expense is necessary for maintenance and repairs if a plant is to be kept in efficient operating condition. These expenses include the cost for labor, materials, and supervision.

Annual costs for equipment maintenance and repairs may range from as low as 2% of the equipment cost if service demands are light to 20% for cases in which there are severe operating demands. The annual maintenance costs are given separately for each process in this report, and range from 5 to 15% of the capital equipment cost of the various processes.

DEPRECIATION

Depreciation is a periodic charge that distributes the installed capital investment cost over its expected service life. Instead of charging the cost of the equipment as an expense in the year of purchase, a portion of its cost is charged against revenues each year throughout its estimated useful life.

In this report the estimated useful life is determined by using the arithmetic average of the high and low lifetimes of equipment when a range is given, or 10 years if the useful life is unknown. In some cases, the useful life may be too high by U.S. Treasury Department Standard Guidelines (such as the 40-year life for the sedimentation process) which allows an 11 year depreciation for chemical plant equipment (Perry and Chilton, 1973). However, using 11 years for all equipment would either understate or overstate the real cost in most circumstances. When the useful life is unknown, 10 years is used to conform to the guidelines of the federal government.

A zero salvage value is assumed in all depreciation estimates and straight-line depreciation is used.

CAPITAL COST

Regardless of whether the capital investment is to be obtained from company funds or made available by bankers, it is logical that the invested capital earn a fair interest. If the company funds are not used

for the new unit, then they could be invested to bear a reasonable interest. If the capital is raised by issuing bonds or by borrowing from another corporation, interest would be paid the investor. It should be pointed out that in order to offer a company the incentive to invest its money in a new plant, it should be able to realize as large an interest rate as it could earn by making other investments. Since the risk is somewhat higher than certain conservative investments, the interest rate should be higher than that offered by these securities. Excessive interest rates are not realistic in view of today's regulatory laws. Normally, an interest rate of from 6 to 8% on the unpaid principal is considered satisfactory.

In computing interest, it is necessary to remember that the amount of interest will decrease each year since the unpaid balance is reduced by the depreciation allowed the previous year. An interest rate of 10% would average approximately 6.3% of the total principal each year if the principal is repaid in 10 annual installments. It is customary to express the interest as a uniform fixed cost item each year.

An interest rate of 10% is used in these estimates based on the cost literature (Chemical Engineering, 1975).

In reality, the interest will decline each year and, therefore, the payment on the principal will increase if uniform principal plus interest payments are made. Uniform payments for n periods required to pay the original sum P can be computed from the following equation (Petroleum Refiner, 1957).

$$R = P\frac{i(1 + i)^n}{(1 + i)^n - 1}$$

where P = original sum

R = uniform periodic payment

n = number of payments

i = interest rate as fraction per period

The expression $(1 - i)^n$ is the compound interest expression found in table form in many handbooks (Lange, Handbook of Chemistry). Value of $i(1 + i)^n/(1 + i)^n - 1$ for various values of n and i are listed below (Petroleum Refiner, 1957).

Values of $\frac{i(1 + i)^n}{(1 + i)^n - 1}$

n	2%	4%	6%	8%	10%
1	1.020	1.040	1.060	1.080	1.100
5	0.212	0.225	0.237	0.250	0.264
10	0.111	0.123	0.136	0.149	0.163

If the original investment was $1,000,000 and the loan was at 10% interest for 10 years, the uniform payment would be

$$R = (1,000,000)\frac{0.1(1 + 0.1)^{10}}{(1 + 0.1)^{10} - 1}$$

$$R = 163,000$$

In 10 years the total payment would be $1,630,000. Thus, the total interest is $630,000 and the average interest rate would be

$$\frac{630,000}{10(1,000,000)} = 6.3\%/\text{year}$$

PLANT OVERHEAD

Plant overhead is a charge to the costs of the manufacturing facility which are not chargeable to any particular operation and are normally charged on an allotted basis. Overhead includes such cost items as plant supervision, plant guards, janitors, cafeterias, administrative offices, accounting, purchasing, etc. Overhead costs will vary from company to company and are usually calculated as a percentage of direct labor cost or a percentage of installed capital investment for the entire facility, and allocated to each operation based on its labor or investment cost.

Plant overhead can range from 40 to 60% of direct labor costs or 15 to 30% of direct costs (Jelen, 1970). We estimate that plant overhead is 20% of direct costs in this report.

CONTINGENCY FOR CAPITAL INVESTMENT (Fowler, 1975)

The selection of a contingency figure for an estimate is a matter of the judgment of the estimator. This judgment must consider several factors, such as:

(1) Data basis--laboratory, pilot or plant

(2) Allowance for inflationary trends

(3) Knowledge of construction costs at plant location

Under favorable conditions, the contingency factor may be as low as 10%. However, lacking actual plant cost and considering present inflationary trends, a contingency figure of 30% would be justified.

In the past, cost indexes have been a reliable method of estimating cost based upon plant costs in earlier years. The plant indexes are more reliable when used on plant cost rather than pilot plant costs. It is much more difficult to use them successfully when equipment is pilot plant size or when a small amount of equipment is used. The use of the indexes in the last 2 years has not been as accurate as in the past and can result in too low a plant estimate. Uncertainty increases if cost indexes are used to update plant estimates rather than actual costs.

Unless the estimator has made the original estimate or knows what the plant costs include, a large amount of uncertainty exists when projecting plant costs to other plant capacities and times. It is necessary to know whether a plant investment includes the cost of utilities, such as a steam boiler or cooling tower, or whether steam and utilities are available at the battery limits of the unit in any amount required. It is also important to know whether the plant investment includes the cost of the land and site preparation. Only if these factors are known can the contingency factor be kept to a reasonable figure of 30% or lower.

REFERENCES

1. Chemical Engineering, p. 89, July 21, 1975.

2. Fowler, F. C., Chemical Engineering Consultant to Midwest Research Institute and President of Research Associates, Kansas City, Missouri, Personal Communication to C. E. Mumma, October 15, 1975.

3. Jelen, F. C., Cost and Optimization Engineering, McGraw-Hill Book Company, New York (1970).

4. Perry, R. H., and C. H. Chilton, Chemical Engineers Handbook, 5th Ed., McGraw-Hill Book Company, New York (1973).

5. Peters, M. S., and K. D. Timmerhaus, Plant Design and Economics for Chemical Engineers, McGraw-Hill Book Company, 2nd Ed. (1968).

6. Petroleum Refiner, Process Design Primer, September 1957.

BIBLIOGRAPHIC DATA SHEET	1. Report No. EPA-440/9-76-009	2.	3. Recipient's Accession No.

4. Title and Subtitle
Wastewater Treatment Technology Documentation, Manufacture of DDT

5. Report Date
Pub. June 1976

6.

7. Author(s)
A. F. Meiners, C. E. Mumma, T. L. Ferguson and G. L. Kelso

8. Performing Organization Rept. No. 4127-C

9. Performing Organization Name and Address
Midwest Research Institute
425 Volker Boulevard
Kansas City, Missouri 64110

10. Project/Task/Work Unit No.

11. Contract/Grant No.
68-01-3524

12. Sponsoring Organization Name and Address
Office of Water Planning and Standards
U.S. Environmental Protection Agency
401 M Street, S.W.
Washington, D.C. 20460

13. Type of Report & Period Covered
Interim Report, Edited

14.

15. Supplementary Notes
Some editing was performed by EPA.

16. Abstracts

This report was prepared to provide technologic supporting information for toxic pollutant effluent standards proposed by EPA under §307(a) of the Federal Water Pollution Control Act Amendments of 1972. The report identifies potential technologies, assesses implementation feasibility, estimates final effluent characteristics and estimates installation and operation costs for DDT manufacturers.

17. Key Words and Document Analysis. 17a. Descriptors
Wastewater
Waste Treatment
Cost Analysis
Cost Comparison
Pesticides
Manufacturers

17b. Identifiers/Open-Ended Terms
Toxic Pollutant Effluent Standards
Federal Water Pollution Control Act

17c. COSATI Field/Group

18. Availability Statement
Release unlimited

19. Security Class (This Report) UNCLASSIFIED

20. Security Class (This Page UNCLASSIFIED

21. No. of Pages ~~98~~ 99

22. Price $5.00

INSTRUCTIONS FOR COMPLETING FORM NTIS-35 (Bibliographic Data Sheet based on COSATI Guidelines to Format Standards for Scientific and Technical Reports Prepared by or for the Federal Government, PB-180 600).

1. **Report Number.** Each individually bound report shall carry a unique alphanumeric designation selected by the performing organization or provided by the sponsoring organization. Use uppercase letters and Arabic numerals only. Examples FASEB-NS-73-87 and FAA-RD-73-09.

2. Leave blank.

3. **Recipient's Accession Number.** Reserved for use by each report recipient.

4. **Title and Subtitle.** Title should indicate clearly and briefly the subject coverage of the report, subordinate subtitle to the main title. When a report is prepared in more than one volume, repeat the primary title, add volume number and include subtitle for the specific volume.

5. **Report Date.** Each report shall carry a date indicating at least month and year. Indicate the basis on which it was selected (e.g., date of issue, date of approval, date of preparation, date published).

6. **Performing Organization Code.** Leave blank.

7. **Author(s).** Give name(s) in conventional order (e.g., John R. Doe, or J.Robert Doe). List author's affiliation if it differs from the performing organization.

8. **Performing Organization Report Number.** Insert if performing organization wishes to assign this number.

9. **Performing Organization Name and Mailing Address.** Give name, street, city, state, and zip code. List no more than two levels of an organizational hierarchy. Display the name of the organization exactly as it should appear in Government indexes such as Government Reports Index (GRI).

10. **Project/Task/Work Unit Number.** Use the project, task and work unit numbers under which the report was prepared.

11. **Contract/Grant Number.** Insert contract or grant number under which report was prepared.

12. **Sponsoring Agency Name and Mailing Address.** Include zip code. Cite main sponsors.

13. **Type of Report and Period Covered.** State interim, final, etc., and, if applicable, inclusive dates.

14. **Sponsoring Agency Code.** Leave blank.

15. **Supplementary Notes.** Enter information not included elsewhere but useful, such as: Prepared in cooperation with . . . Translation of . . . Presented at conference of . . . To be published in . . . Supersedes . . . Supplements . . . Cite availability of related parts, volumes, phases, etc. with report number.

16. **Abstract.** Include a brief (200 words or less) factual summary of the most significant information contained in the report. If the report contains a significant bibliography or literature survey, mention it here.

17. **Key Words and Document Analysis. (a). Descriptors.** Select from the Thesaurus of Engineering and Scientific Terms the proper authorized terms that identify the major concept of the research and are sufficiently specific and precise to be used as index entries for cataloging.
(b). Identifiers and Open-Ended Terms. Use identifiers for project names, code names, equipment designators, etc. Use open-ended terms written in descriptor form for those subjects for which no descriptor exists.
(c). COSATI Field/Group. Field and Group assignments are to be taken from the 1964 COSATI Subject Category List. Since the majority of documents are multidisciplinary in nature, the primary Field/Group assignment(s) will be the specific discipline, area of human endeavor, or type of physical object. The application(s) will be cross-referenced with secondary Field/Group assignments that will follow the primary posting(s).

18. **Distribution Statement.** Denote public releasability, for example "Release unlimited", or limitation for reasons other than security. Cite any availability to the public, other than NTIS, with address, order number and price, if known.

19 & 20. **Security Classification.** Do not submit classified reports to the National Technical Information Service.

21. **Number of Pages.** Insert the total number of pages, including introductory pages, but excluding distribution list, if any.

22. **NTIS Price.** Leave blank.