United States
Environmental Protection
Agency

EPA-600/7-81-025
March 1981

EPA

Research and Development

ENVIRONMENTAL ASPECTS OF SYNFUEL UTILIZATION

Prepared for

All EPA Program and Regional Offices

Prepared by

Industrial Environmental Research
Laboratory
Research Triangle Park NC 27711

RESEARCH REPORTING SERIES

Research reports of the Office of Research and Development, U.S. Environmental Protection Agency, have been grouped into nine series. These nine broad categories were established to facilitate further development and application of environmental technology. Elimination of traditional grouping was consciously planned to foster technology transfer and a maximum interface in related fields The nine series are:

1. Environmental Health Effects Research
2. Environmental Protection Technology
3. Ecological Research
4. Environmental Monitoring
5. Socioeconomic Environmental Studies
6. Scientific and Technical Assessment Reports (STAR)
7. Interagency Energy-Environment Research and Development
8. "Special" Reports
9. Miscellaneous Reports

This report has been assigned to the INTERAGENCY ENERGY-ENVIRONMENT RESEARCH AND DEVELOPMENT series Reports in this series result from the effort funded under the 17-agency Federal Energy/Environment Research and Development Program These studies relate to EPA's mission to protect the public health and welfare from adverse effects of pollutants associated with energy systems. The goal of the Program is to assure the rapid development of domestic energy supplies in an environmentally-compatible manner by providing the necessary environmental data and control technology. Investigations include analyses of the transport of energy-related pollutants and their health and ecological effects, assessments of, and development of, control technologies for energy systems; and integrated assessments of a wide range of energy-related environmental issues.

EPA REVIEW NOTICE

This report has been reviewed by the participating Federal Agencies, and approved for publication. Approval does not signify that the contents necessarily reflect the views and policies of the Government, nor does mention of trade names or commercial products constitute endorsement or recommendation for use.

This document is available to the public through the National Technical Information Service, Springfield, Virginia 22161.

EPA-600/7-81-025
March 1981

ENVIRONMENTAL ASPECTS OF SYNFUEL UTILIZATION

by

M. Ghassemi and R. Iyer

TRW
ENVIRONMENTAL ENGINEERING DIVISION
Redondo Beach, CA 90278

EPA Contract No. 68-02-3174
Work Assignment No. 018
EPA Program Element No. CCZN1A

Project Officer: J. McSorley

Industrial Environmental Research Laboratory
Office of Environmental Engineering and Technology
Research Triangle Park, N.C. 27711

Prepared for:

U.S. ENVIRONMENTAL PROTECTION AGENCY
Office of Research and Development
Washington, D.C. 20460

ABSTRACT

This study reviews the environmental concerns relating to the distribution, handling, and end use of synfuel products likely to enter the marketplace by the year 2000 and assigns priority rankings to these products based on environmental concerns in order to aid EPA in focusing its regulatory and research activities. Major products and by-products of oil shale, coal liquefaction, and coal gasification technologies are considered.

Based on current developmental activities, three likely scenarios for shale- and coal-based synfuel plant build-up are projected. The type and quantity of synfuel products and by-products likely to enter the market are identified, and their regional market penetration is estimated. The environmental analysis consists of a review of the available data on the physical, chemical, and health effects characteristics of synfuel products and the environmental significance of these characteristics; an analysis of the potential environmental impacts and regional implications associated with the production and use scenarios considered; and a ranking of the products from the standpoint of environmental concerns and mitigation requirements.

The results indicate that: (a) significant quantities of synfuel products are expected to enter the marketplace during the next 20 years, (b) large-scale transportation, distribution, and end use of certain synfuel products can present significant threats to the environment and the public health, (c) based on gross characteristics, synfuel products appear to be similar to petroleum-based products, but detailed characterization data are not available to permit judgements of their relative safety, and (d) synfuel test and evaluation programs currently underway or planned provide excellent opportunities for collecting some of the required environmental data.

CONTENTS

Abstract ii

Figures vi

Tables viii

Acknowledgement xii

1. INTRODUCTION 1

1.1 Background and an Overview of Current EPA Synthetic Fuels Environmental Assessment Programs 1

1.2 Objective of the Synfuel Utilization Study 2

1.3 Methodology 2

1.4 Initial Examinations 4

1.5 Synfuel Utilization Projections 4

1.5.1 Types and Quantities of Synfuel Products/By-Products Entering the Market 4

1.5.2 Market Analysis of Synfuel Products/By-Products . . 5

1.6 Environmental Analysis and Product Ranking 5

1.6.1 Development of Data Base on Synfuel Product Characteristics 5

1.6.2 Analysis of Potential Areas of Environmental Concern and Regional Implications of Synfuel Product Utilization 6

1.6.3 Priority Ranking of Synfuel Products 6

1.7 Background Information 7

2. SYNFUEL PRODUCTION OVER THE NEXT TWENTY YEARS 8

2.1 Synfuel Production Scenarios 8

2.1.1 Perspectives for Synfuel Production Scenarios 8

2.1.2 Synfuel Industry Build-up Scenarios 20

2.1.3 Other Synfuel Production Projections 23

2.2 Synfuel Plant and Product Build-up Scenarios 25

2.2.1 Shale Oil 26

2.2.2 Coal Liquefaction and Gasification 36

3. MARKET ANALYSIS OF SYNFUEL PRODUCTS AND BY-PRODUCTS 48

3.1 Likely Location of Synfuel Plants 50

CONTENTS (Continued)

3.1.1 Oil Shale Plant Location 50
3.1.2 Coal Conversion Plant Location 50
3.2 Synfuel Product Utilization 53
3.2.1 Gaseous Products 56
3.2.2 Light Distillates 58
3.2.3 Middle Distillates 59
3.2.4 Residuals 59
3.2.5 Petrochemical Feedstocks and Other By-Products. . . . 60
3.3 Regional Market Penetration of Synfuel Products 61
3.3.1 Shale Oil 61
3.3.2 Coal Gas 63
3.3.3 Coal Liquefaction Products 66
3.3.4 Petrochemical Feedstocks and Other By-Products. . . . 73
3.3.5 Summary of Synfuel Product Utilization by Region . . 76

4. CHARACTERISTICS OF SYNFUEL PRODUCTS 99
4.1 Physical/Chemical Characteristics 99
4.1.1 Shale Oil Products 99
4.1.2 Direct Coal Liquefaction Products 101
4.1.3 Indirect Coal Liquefaction Products 103
4.1.4 Coal Gasification Products 104
4.1.5 Summary of the Data Currently Available and Data Gaps from an Environmental Assessment Standpoint 106
4.2 Combustion Characteristics 107
4.2.1 Shale Oil Products 107
4.2.2 Direct Coal Liquefaction Products 109
4.2.3 Indirect Liquefaction Products 112
4.2.4 Coal Gasification Products 112
4.2.5 Summary of the Data Currently Available and the Data Gaps from an Environmental Assessment Standpoint . . 114
4.3 Biological and Health Effects Characteristics 114
4.3.1 Shale Oil Products 114
4.3.2 Direct Liquefaction Products 116
4.3.3 Indirect Liquefaction Products 118

CONTENTS (Continued)

4.3.4 Coal Gasification Products 119

4.3.5 Summary of the Data Currently Available and Data Gaps from an Environmental Assessment Standpoint . . 120

4.4 Relevant Comments from Potential Major Synfuel Suppliers and Users 120

5. ENVIRONMENTAL ANALYSIS OF SYNFUEL UTILIZATION AND POTENTIAL AREAS OF MAJOR ENVIRONMENTAL CONCERN 126

5.1 Significance of Reported Synfuel Products Characteristics 126

5.2 Estimated/Anticipated Characteristics of Various Synfuel Products and Associated Environmental Concerns 129

5.3 Applicable Controls and Regulatory Considerations 139

5.3.1 Applicable Controls and Mitigation Measures 139

5.3.2 Significant Relevant Statutes and Regulations . . . 140

5.4 Environmental Impacts Associated with Various Production and Use Scenarios and Regional Considerations 145

5.4.1 Shale Oil Products 145

5.4.2 Low-/Medium-Btu Coal Gas Products 154

6. PRIORITY RANKING OF SYNFUEL PRODUCTS FROM THE STANDPOINT OF ENVIRONMENTAL CONCERNS 157

6.1 Basis for Product Ranking 157

6.2 Attribute Rating Procedure 162

6.2.1 Exposure 162

6.2.2 Emission Factor 164

6.2.3 Toxic Hazard 164

6.2.4 Cost of Control 165

6.2.5 Adequacy of Existing Regulations 165

6.3 Products Ranking 168

7. DATA GAPS AND LIMITATIONS AND RELATED PROGRAMS 171

7.1 Major Factors Responsible for Data Gaps and Limitations . . 171

7.2 Specific Data Gaps and Limitations 173

7.3 Related Programs 174

7.3.1 Environmental and Health Effects Programs 175

7.3.2 Combustion Characteristics 175

FIGURES

Number		
1	Synfuel Industry Build-Up for the National Goal Scenario . .	21
2	Synfuel Industry Build-Up for the Nominal Production Scenario	23
3	Synfuel Industry Build-Up for the Accelerated Production Scenario	25
4	Oil Shale Product Build-Up for Scenario I	34
5	Oil Shale Product Build-Up for Scenario II	35
6	Oil Shale Product Build-Up for Scenario III	35
7	Coal Liquefaction Product Build-Up for Scenario I	46
8	Coal Liquefaction Product Build-Up for Scenario II	46
9	Coal Liquefaction Product Build-Up for Scenario III	47
10	Oil Shale Deposits Most Likely to be Used for Synfuel Production	51
11	Coal Resources Most Likely to be Used for Synfuel Production	52
12	Likely Locations for Synthetic Fuel Plants	54
13	Synfuel Utilization During 1985-2000	62
14	Synfuel Production and Utilization Regions - Scenario II 1980-1987	78
15	Synfuel Production and Utilization Regions - Scenario II - 1988-1992	82
16	Synfuel Production and Utilization Regions - Scenario II - 1993-2000	89
17	Estimated Utilization Pattern for Shale Oil Products; Scenario II, 1980-1987 Time Period.	146
18	Estimated Utilization Pattern for Shale Oil Products; Scenario II, 1988-1992 and 1993-2000 Time Period	147
19	Estimated Utilization Pattern for Low-/Medium-Btu Gas; Scenario II, 1980-1987 Time Period	148

FIGURES (Continued)

Number

20 Estimated Utilization Pattern for Indirect Coal Liquefaction Products; Scenario II, 1988-1993 Time Period 149

21 Estimated Utilization Pattern for Indirect Coal Liquefaction Products; Scenario II, 1993-2000 Time Period 150

22 Estimated Utilization Pattern for Direct Coal Liquefaction Products; Scenario II, 1988-1992 Time Period 152

23 Estimated Utilization Pattern for Direct Coal Liquefaction Products; Scenario II, 1993-2000 Time Period 152

TABLES

Number		
1	Synfuel Market Overview	3
2	U.S. Oil Shale Projects	10
3	Coal Gasifiers for High-, Medium-, and Low-BTU Gas	13
4	Status of other Coal Gasification Processes	14
5	Major Coal Liquefaction Processes	16
6	Synfuel Projections	24
7	Oil Shale Plant Build-Up, Scenario I	27
8	Oil Shale Plant Build-Up, Scenario II	28
9	Oil Shale Plant Build-Up, Scenario III	29
10	Current Permitting Status of Oil Shale Projects	30
11	Process Technologies Under Consideration	36
12	Coal Liquefaction Plant Build-Up for Scenario I	37
13	Coal Liquefaction Plant Build-Up for Scenario II	38
14	Coal Liquefaction Plant Build-Up for Scenario III	38
15	Coal Gasification Plant Build-Up for Scenario I	42
16	Coal Gasification Plant Build-Up for Scenario II	42
17	Coal Gasification Plant Build-Up for Scenario III	43
18	Maximum Anticipated Shale Oil Production Rate for Scenario II	50
19	Number of Coal Conversion Plants Needed On-Stream to Meet the Requirements of the Nominal Production Scenario - Scenario II	55
20	Types and Quantities of Coal Conversion Products Produced from Plants on Stream for the Nominal Production Scenario - Scenario II	68
21	Comparison of Petrochemical Feedstocks and Other By-Products Produced to Meet the Goals of Scenario II Vs. Scenario I and Scenario III	74
22	Likely Utilization Patterns of Major Synfuel Products By Regions-Scenario II, 1980-1987 Time Period (In MMBPD)	77
23	Likely Utilization Patterns of Major Synfuel Products By Regions and by Sectors--Scenario II--1980-1987 Time Period-Region VIII (In MMBPD)	79

TABLES (Continued)

Number		
24	Likely Utilization Patterns of Major Synfuel Products by Regions and by Sectors--Scenario II--1980-1987 Time Period-Region V (In MMBPD)	80
25	Likely Utilization Patterns of Major Synfuel Products by EPA Regions-Scenario II--1988-1992 Time Period (In MMBPD). .	81
26	Likely Utilization Patterns of Major Synfuel Products by Regions and by Sectors--Scenario II--1988-1992 Time Period, Region V (In MMBPD)	83
27	Likely Utilization Patterns of Major Synfuel Products by Regions and by Sectors--Scenario II--1988-1992 Time Period, Region VIII (In MMBPD)	84
28	Likely Utilization Patterns of Major Synfuel Products by Regions and by Sectors--Scenario II--1988-1992 Time Period Region X (In MMBPD)	85
29	Likely Utilization Patterns of Major Synfuel Products by Regions and by Sectors--Scenario II--1988-1992 Time Period Region IX (In MMBPD)	86
30	Likely Utilization Patterns of Major Synfuel Products by Regions and by Sectors--Scenario II--1988-1992 Time Period Region VII (In MMBPD)	87
31	Likely Utilization Patterns of Major Synfuel Projects by EPA Regions, Scenario II -- 1993-2000 Time Period (In MMBPD)	90
32	Likely Utilization Patterns of Major Synfuel Products by Regions and by Sectors--Scenario II--1993-2000 Time Period Region III (MMBPD)	91
33	Likely Utilization Patterns of Major Synfuel Products by Regions and by Sectors--Scenario II--1993-2000 Time Period Region IV (In MMBPD)	92
34	Likely Utilization Patterns of Major Synfuel Products by Regions and by Sectors--Scenario II--1993-2000 Time Period Region V (In MMBPD)	93
35	Likely Utilization Patterns of Major Synfuel Products by Regions and by Sectors--Scenario II--1993-2000 Time Period Region VI (In MMBPD)	94
36	Likely Utilization Patterns of Major Synfuel Products by Regions and By Sectors--Scenario II--1993-2000 Time Period Region VIII (In MMBPD)	95
37	Likely Utilization Patterns of Major Synfuel Products by Regions and by Sectors--Scenario II--1993-2000 Time Period Region X (In MMBPD)	96

TABLES (Continued)

Number		
38	Likely Utilization Patterns of Major Synfuel Products by Regions and By Sectors--Scenario II--1993-2000 Time Period Region VI (In MMBPD)	97
39	Like Utilization Patterns of Major Synfuel Products by Regions and by Sectors--Scenario II--1993-2000 Time Period Region VII (In MMBPD)	98
40	Combustion Test Results for SRC II Fuel Oils	110
41	Combustion Test Results for H-Coal Fuels	111
42	Combustion Test Results for EDS Coal Liquids	113
43	Summary of Health Effects Data for SRC II Products and (Where Available) for Petroleum Analogs	117
44	Health Effects Test Results for H-Coal Fuel Oils	118
45	Summary of Comments from Synfuel Suppliers on the Relative Characteristics of Synfuels and Petroleum Products	121
46	Summary of Comments from Potential Synfuel Users on the Relative Characteristics of Synfuels and Petroleum Products	123
47	Reported Known Differences in Chemical, Combustion, and Health Effects Characteristics of Synfuel Products and Their Petroleum Analogs	127
48	Sources and Nature of Environmental Concerns in the Utilization of Shale Oil Products	130
49	Sources and Nature of Environmental Concerns in the Utilization of Coal Liquefaction Products	133
50	Sources and Nature of Environmental Concerns in the Utilization of Coal Gases	137
51	OSHA Standards for Materials Known or Suspected to be Present in Lurgi SNG Plants	144
52	Quantity of Various Shale Oil Products in Relation to Petroleum Analogs in the EPA Region of Maximum Shale Oil Product Use and on a National Basis for Scenario II	155
53	Estimated Quantities of Synfuel Products Used in the U.S.: 1980-87	159
54	Estimated Quantity of Synfuel Products Used in the U.S.: 1988-1992	160
55	Estimated Quantities of Synfuel Products Used in the U.S.: 1993-2000	161

TABLES (Continued)

Number		
56	Relative Assessment of the Environmental Hazards Associated with Synfuel Products and Petroleum Analogs . .	163
57	Priority Rankings of Synthetic Fuel Products	169
58	Chemical, Biological and Ecological Testing of Paraho/ Sohio Crude and Refined Shale Oil Suite	176
59	Health Effects Testing for Direct Coal Liquids	177

ACKNOWLEDGMENT

This study and the preparation of this report have involved participation of professionals from two organizational elements of TRW: Environmental Engineering Division, Redondo Beach, CA ; and Energy Engineering Division, McLean, VA. The following individuals have participated in the study:

Environmental Analysis

M. Ghassemi (Team Leader)
R. Scofield
R. Maddalone
S. Quinlivan
J. Cotter
L. Fargo
J. Dadiani

Synfuel Utilization Projections

R. Iyer (Team Leader)
E. Bohn
D. Dickehuth
M. Oyster
W. Parker

Interviews with Major Potential Suppliers/Users

E. Bohn
J. Cotter
J. Cowles
R. Iyer
K. Lewis

The project is deeply indepted to the EPA Project Officer, Mr. Joe McSorley, for his continuing advice and guidance during the course of the effort. Those on the project staff wish to express their gratitude to the process developers who provided data for use in synfuel utilization projections and the potential suppliers and users of synfuel products listed in Appendix A who granted interviews expressing their views on synfuel commercialization, product utilization, and related environmental issues.

Special thanks are due to Ms. Judy Bolster and Ms. Carol Jeffrey for their secretarial service, to Ms. Alice Lowthrop for her editorial review, and to Mrs. Deborah Milanowski and Ms. Kathy Trujillo for Word Processing services.

SECTION 1

INTRODUCTION

1.1 BACKGROUND AND AN OVERVIEW OF CURRENT EPA SYNTHETIC FUELS ENVIRONMENTAL ASSESSMENT PROGRAMS

The recognition of the limited availability of domestic supplies of natural gas and crude oil and of the necessity to reduce the country's dependence on foreign sources of energy have promoted significant commitments by the U.S. government and the industry to the development of a major domestic synthetic fuels industry. The government commitments are demonstrated by the recent establishment of the U.S. Synthetic Fuels Corporation to help and fund commercial projects and the Energy Mobilization Board to speed permitting of energy facilities. The industry has been heavily involved in the development, test and demonstration of various energy technologies and is participating in the commercialization program.

The establishment of a major synthetic fuels industry in the U.S. and the widespread utilization of synfuel products present significant public health and safety risks and a great potential for environmental contamination. To meet these challenges, the U.S. Environmental Protection Agency has accelerated and expanded its synthetic fuels environmental programs and has taken steps to integrate internal agency planning activities. Two policy groups, the Alternate Fuels Group (AFG) and the Priority Energy Project Group (PEPG), have been formed under the Assistant Administrator level EPA Energy Policy Committee. AFG will be responsible for: (1) drafting the Agency's regulatory, permitting and research strategy for synthetic and other alternate fuels; (2) coordinating the preparation of environmental guidance for emerging fuels and technologies for use by industry planners and permitting officials; and (3) developing recommendations and overseeing the preparation and promulgation of new environmental standards for these fuels and technologies as appropriate. The Priority Energy Project Group will plan how EPA should relate and respond to the activities of the Energy Mobilization Board. It will draft the Agency's procedures and guidance for working with the Board and will work with the Board, offering information and assistance on EPA permitting and the effects of the Board activities on the review process.

The effort of AFG to date has included the formation of five working groups that are involved in the preparation of Pollution Control Guidance Documents (PCGD's) for major synthetic fuels technologies. The PCGD's will provide guidance on available control technologies for multimedia waste streams. Early development of environmental guidelines will: (1) allow

their utilization in technology process design; (2) provide environmental impact statement (EIS) and permit reviewers with information to ensure that dischargers will be reasonably controlled in a cost-effective manner; and (3) expedite EIS and permit application review. These factors should speed commercialization of emerging synthetic fuels technologies while providing environmental protection for currently known environmental effects. PCGD's for gasification, direct and indirect liquefaction, and oil shale technology are in various stages of completion; these efforts, which receive inputs from EPA Program Offices, are being directed by the EPA Industrial Environmental Research Laboratory in Research Triangle Park, North Carolina (EPA/IERL-RTP) for the Coal Conversion Technologies; and by the EPA Industrial Environmental Research Laboratory in Cincinnati, Ohio (EPA/IERL-Ci) for the oil shale technology. In addition to the preparation of PCGD's, EPA/IERL-RTP and EPA/IERL-Ci are currently involved in a number of synthetic fuel environmental assessment programs involving process technology data base development, control technology assessment, and environmental data acquisition via source test and evaluation at synfuel facilities.

PCGD's and nearly all other current EPA synfuel-related environmental assessment programs primarily focus on the technologies for the production of synthetic fuels. The study described in this report, which was sponsored by the EPA/IERL-RTP, constitutes the first major effort by EPA to identify and examine environmental concerns that would be associated with the projected wide-scale distribution, handling, and end use of synfuel products. A related program, which is currently in progress and which is sponsored jointly by EPA/IERL-RTP and EPA Office of Planning and Management, will extend the present study to an analysis of the tradeoffs of various product slates for minimizing environmental impacts associated with product handling, distribution, and utilization.

1.2 OBJECTIVE OF THE SYNFUEL UTILIZATION STUDY

Several synfuel technologies are under consideration for commercial production. A wide range of synfuel products is expected to be produced and utilized in a broad category of end uses (Table 1).

The objective of this study was to evaluate a broad range of environmental concerns relating to synfuel utilization and assign them priority rankings to aid EPA in focusing its regulatory and research activities. The study includes the entire market infrastructure, which will eventually comprise synfuel upgrading; product distribution and storage; and product consumption.

1.3 METHODOLOGY

The study methodology was based on the development of a priority matrix of environmental concerns and criteria, which were evaluated for each of the synfuel process technologies and products indicated in Table 1. The elements of this priority matrix include:

TABLE 1. SYNFUEL MARKET OVERVIEW

What Technologies Produce Synfuels?		What Major Products/ Byproducts Will They Make?	Where Will The Products/ Byproducts Be Used?	What Are The Relative Potential Exposure Levels to The Products?
OIL SHALE:	Numerous Retorting processes, Including Tosco, Paraho, Union, Occidental	Syncrude upgraded and refined to yield: Gasoline Jet Fuel Diesel Fuel Residuals	• Commercial and military transportation, including highway vehicles, aircraft, ships • Utility and industrial boilers • Commercial and residential heating • Industrial lubricants	Low for transport of crude shale to refinery; moderate during refining increased exposure level when used in transportation sources and space heating and end use as boiler fuel
DIRECT COAL LIQUEFACTION:	SRC-II	LPG Naphtha Fuel Oil	• Utility and industrial boilers • Commercial and residential heating • Chemical feedstocks	Low for LPG, Naphtha as feedstocks. Moderate exposure for fuel oils at industrial sites with exposure for fuel oils at industrial sites with exposure increasing when used in space heating
	Exxon Donor Solvent	LPG Naphtha Fuel Oil Solvent	• Utility and industrial boilers • Commercial and residential heating • Paint thinners	
	H-Coal	Naphtha Fuel Oil LPG	• Utility and industrial boilers • Commercial and residential heating	
INDIRECT COAL LIQUEFACTION:	Fischer-Tropsch	Gasoline LPG Diesel Fuel Heavy Fuel Oil Medium Btu Gas SNG Tar Oils[a] Phenols	• Commercial and military transportation • Utility and industrial boilers • Commercial and residential heating • Chemical feedstocks • Agriculture uses	Moderate exposure when fuels used in transportation sources and boilers. Low to moderate exposure is also estimated when products used as chemical feedstocks
	M-Gasoline	Gasoline	• Commercial and military transportation	
	Methanol	Fuel Grade Methanol	• Commercial and military transportation • Chemical feedstocks	
HIGH BTU COAL GASIFICATION:	Numerous Processes, Including Lurgi, Coed-Cogas, Texaco, Shell-Koppers	SNG[b]	• Commercial and residential heating	Very low - similar to current distribution of natural gas
MEDIUM BTU COAL GASIFICATION:	Numerous Processes	Medium Btu Gas Low Btu Gas	• Captive fuel use for industrial heating and chemical feedstocks	Very low for captive use; moderate exposure for fuel use

[a] Only representative byproducts are indicated

[b] Substitute Natural Gas

- Amount of synthetic fuel product in the market (at any time)
- Exposure created by transport, storage, and end use of a designated quantity of product
- Emission factors (air, water, land) related to product transport, storage, and end use
- Toxic hazards associated with the products and their combustion products
- Cost of pollution controls that would be required to mitigate the exposure
- Regulatory protection that would be offered by existing or planned environmental regulations.

Environmental evaluations of new product use emphasize the element of risk associated with exposure. There is already an implicit acceptance of the risk of conventional petroleum and natural gas utilization. Therefore, it seems logical that any assessment of synfuel utilization risk should be relative to the existing use of conventional fuels.

1.4 INITIAL EXAMINATIONS

First, sets of background information were compiled that included data on those synfuel technologies considered mature enough for possible commercialization by the 1990s. These technologies are coal gasification (high-Btu, medium-Btu, low-Btu), coal liquefaction (indirect and direct) and oil shale retorting. Production rates for the particular synthetic fuels were projected based on various production forecasts by potential synfuel producers or government agencies. Finally, the environmental exposures of the utilization systems were scoped, control options were briefly considered, and options for EPA actions were noted. The results of this initial examination were published under the Problem-Oriented Report Title "Utilization of Synthetic Fuels: An Environmental Perspective" by Industrial Environmental Research Laboratory/Research Triangle Park (August 1980).

1.5 SYNFUEL UTILIZATION PROJECTIONS

1.5.1 Types and Quantities of Synfuel Products/By-Products Entering the Market

Three specific scenarios were chosen to define possible synfuel utilization systems of the 1990's that would derive from the most likely buildup rates for the most mature synfuel processes at the probable production sites.

- A national goal scenario driven by federal incentives

- A nominal production or most likely scenario
- An accelerated production scenario representing an upper bound for industry buildup.

Those refined or processed products likely to be produced from the major synfuel plant product streams were evaluated to yield the types and quantities of synfuel products and by-products entering the market. Recognizing that plant mix, product split, distribution systems, and end use may vary from scenario to scenario, the differences among the three scenarios were specifically identified.

1.5.2 Market Analysis of Synfuel Products/By-Products

The penetration of synfuel products and by-products into the existing marketing system for conventional fuels was analyzed. For this purpose, a survey of the existing marketing system infrastructure established the type and relative quantities of petroleum-based products and by-products that are in commerce today. This infrastructure served as a baseline system into which oil shale and coal-derived synfuel products and by-products were introduced as they become available. The existing baseline system facilitated comparison of product quantities, modes of transport, exposures (by geographical areas), emissions, toxic characteristics, and the control and regulatory framework for environmental protection.

Also a limited set of interviews was held with potential synfuel product users and producers to determine their plans for production and use of synfuel products. Representative producers of each synfuel type (oil shale, coal gasification, coal liquefaction), personnel from DOE energy technology centers, and representatives of end-users were interviewed. The interview results were incorporated into the market analysis.

The analysis included:

- Identification of plant types, their likely location, and timing
- Identification of synfuel product/by-product end uses
- Evaluation of distribution, handling, and storage systems for the major product slates
- Description of end use applications and geographical distribution, including transportation, utility, industrial, and commercial/residential sectors.

1.6 ENVIRONMENTAL ANALYSIS AND PRODUCT RANKING

1.6.1 Development of Data Base on Synfuel Product Characteristics

To develop the data base for analyzing environmental implications of synfuel product end uses, the reported data on physical and chemical

properties and health effects and combustion characteristics of synfuel products (and where available of analogous petroleum and natural gas products) were reviewed. the limitations of the available data, which should be clearly understood in comparihg synfuels with conventional fuels from an end use environmental standpoint, and the key relevant on-going and planned programs which would be expected to generate some of the needed data were identified.

1.6.2 Analysis of Potential Areas of Environmental Concern and Regional Implications of Synfuel Product Utilization

The potential areas of environmental concern in synfuel utilization were identified in the light of the significance of reported or estimated product characteristics. The known and estimated environmental significance of product properties were then related to the product utilization scenarios developed previously and potential environmental areas requiring more immediate attention were highlighted. In general, the environmental analysis was in "relative" rather than "absolute" terms in that properties and use impacts of synfuel products were not considered in themselves but rather were reviewed in comparison with those for the petroleum analogs. Some of the control measures and regulatory considerations for the mitigation of the major environmental concerns for various anticipated product uses were identified. Six major Federal environmental statutes which would have bearings on the environmental concerns and mitigation measures were briefly reviewed.

1.6.3 Priority Ranking of Synfuel Products

A priority ranking system was developed and used to rank synfuel products from the standpoint of end use environmental concerns. The system takes into account;

- Environmentally significant characteristics of synfuel products relative to those of petroleum analogs, based on consideraions of exposure potential, combustive and evaporative emissions, toxic hazards, cost of control and the extent of regulatory protections under key existing environmental legislations. Products for which the environmental risks and control needs are greater and for which less protections can be anticipated under existing regulations were given a higher ranking.

- The estimated quantity of products used, both in absolute terms and as percentages of the total (synfuel and petroleum) used nationwide and in the regions of maximum use. The greater the amount of the product used and the percentages of usage, the greater is the potential of presenting environmental hazards and hence a higher positive ranking.

- Considerable scientific and engineering judgement. Because of the lack of a solid data base, heavy reliance was placed on the professional judgement of experts most familiar with the domestic

energy supply and demand picture, synfuel production/refining technologies, expected environmental characteristics of synfuel products, applicable controls and regulatory needs.

Based on the above considerations, synfuel products were ranked into threee groups: those eliciting the most concern (ranked as "1"), those indicating the "modest" concern (ranked as "2") and those generating a "low" level of concern at the present time (ranked as "3").

1.7 Background Information

A substantial body of information was used to derive the analyses and conclusions contained in this report. This background information is contained in the appendices:

Appendix A. Interviews with Potential Suppliers and Users of Synfuel Products

Appendix B. Commercial Coal Liquefaction and Gasification Projects

Appendix C. Cooperative Agreements and Feasibility Study Grants for Synfuels

Appendix D. Baseline Petroleum and Natural Gas System

Appendix E. Physical and Chemical Characterization of Synfuel Products

Appendix F. Combustion Products and Use Properties of Synthetic Fuels

Appendix G. Health Effects Test Results for Synthetic Fuels

SECTION 2

SYNFUEL PRODUCTION OVER THE NEXT TWENTY YEARS

2.1 SYNFUEL PRODUCTION SCENARIOS

To obtain an environmental perspective of synfuels utilization, three scenarios of synfuel industry buildup rates to the year 2000 were developed: (1) The national goals scenario driven by federal incentives; (2) a nominal production or most likely scenario; and (3) an accelerated production scenario representing an upper bound for industry buildup. Based on these scenarios, the product market for synfuels and their possible environmental impacts are discussed in Sections 3, 4, and 5, respectively.

2.1.1 Perspectives for Synfuel Production Scenarios

2.1.1.1 History and Status of Synfuel Technologies

The term synfuel has become synonymous with any combustible nonpetroleum fuel source, including coal- and shale-derived fuels and feedstocks as well as those derived from agricultural products such as grain, wood, and cellulose. However, industry has become increasingly more interested in those synfuel technologies with products that are easily substituted for petroleum and natural gas--coal- and shale-derived products. The following discussion is limited to these products.

Shale Oil Technology - History and Status

The use of oil shale as a fuel resource predates the large-scale use of conventional petroleum by several centuries. In the past 150 years, commercial industries have existed in Scotland, France, Germany, Spain, South Africa, Australia, and the United States. The U.S. oil shale industry was an important part of the nation's energy economy before the first oil well was drilled. At least 50 commercial plants for extraction of fuel oil from eastern oil shales existed before 1859; but the industry disappeared shortly after commercial petroleum production began. However, the Synthetic Liquid Fuels Act was passed just before the end of Second World War, and soon after its passage the United States Bureau of Mines (USBM) began a comprehensive R&D program that has continued to the present day, although oversight authority has been transferred to the Department of Energy. One of USBM's most significant early acts was to establish a research facility at Anvil Points on the Naval Oil Shale Reserve near Rifle, Colorado. In 1973, the facility was leased by Development Engineering Inc. (DEI), which operated it for five years. During this time the Paraho retorting process was developed. DEI used the facility to produce over 100,000 barrels of shale oil for refining studies.

As a direct substitute for large volumes of liquid fuels, oil shale technology is perhaps closest to commercialization in the U.S. Several consortia and companies have been engaged in the development of shale oil technology for some time and have established shale oil projects located in prime shale areas of Colorado and Utah (Table 2).

Many technologies for the extraction of kerogen (a waxy organic material) from shale are being developed and tested. Most involve heating shale to about 480°C and pyrolyzing the kerogen into a viscous liquid called shale oil. They differ in the manner in which this heating process is accomplished: surface retorting, in situ retorting, or modified in situ retorting.

In surface retorting, oil shale is mined, crushed to the proper size, and then fed to a large kiln for heating. Several surface retorting processes are under development that differ primarily in the heating method used. Internal-combustion retorting heats shale by the circulation of hot gases that are produced inside the retort by the combustion of residual carbons in the shale. Gas-cycle retorts used by Union Oil heat the shale by circulating externally heated fluids; no combustion occurs inside the retort. In solid-heat-carrier retorting, hot solids are heated outside the retort and cycled through the shale. For example, the TOSCO process uses ceramic balls as the heat carrier.

In situ retorting pyrolyzes oil shale while it is still in the ground. The shale bed is ignited and sustained by injection wells, the shale is pyrolyzed, and the oil produced is pumped out of the retort volume through a production well. The spent shale remains in place. For successful in situ retorting, the shale bed must be made permeable to the flow of heat and product oil; various techniques of bed leaching or fracturing are employed. The difficulty of creating a permeable shale bed has led to the development of modified in situ processes. Vertical modified in situ (VMIS) retorting removes a portion of the shale from the bottom of the deposit and fractures the remaining shale to create a chimney of shale rubble. The shale in this chimney is retorted from top to bottom. Occidental Oil Company has been testing VMIS retorting on shales at Logan Wash and Piceance Creek Basin in Colorado. Horizontal modified in situ retorting lifts the overburden in some cases, and fractures the shale seam to retort the shale from side to side. Geokinetics, Inc. is developing this technique in Utah.

The technology for surface retorting is more advanced than that for in situ retorting, because process variables are easier to monitor and control in above-ground retorts than in underground retorts. However, large-scale commercial surface retorting requires large-scale oil shale mining, hauling, and crushing; and large-scale disposal of spent shale. It is also limited to that portion of the shale resources that is mineable. In situ retorting without mining is applicable to a greater variety of shale beds, and eliminates the requirements for handling, crushing, and spent shale disposal. However, attempts to demonstrate this technology have identified

TABLE 2. U.S. OIL SHALE PROJECTS

Project	Location[1]	Technology	Production Capacity Goal (bbl/day)	Status
Chevron	Piceance Basin	Undecided	50,000	Technical assessment phase.
Colony (TOSCO, EXXON C)	Parachute Creek	Surface retorting	47,000	Construction of commercial modules scheduled for 1980.
Equity Oil	Piceance Creek	Solution injection, modified in-situ	-	Steam-injection feasibility
Geokinetics, Inc.	Uinta County	Horizontal modified in-situ	7-13 2,000-5,000	Several small retorts successfully burned; work on larger retorts in progress.
Getty Oil	Piceance Basin	Surface thermal extraction	-	Getty R&D proposal being considered by DOE
Mobil	Piceance Basin	Undecided	50,000	May start module in 1987
Occidental Oil	Logan Wash	Vertical modified in-situ	70,000	Six retorts burned; 48,000 bbl produced. Retorts 7 and 8 scheduled for cluster burn.
Occidental Oil - Tenneco	Tract C-b, Piceance Basin	Vertical modified in-situ	57,000	Shaft sinking in progress; construction of initial retorts scheduled for 1982.
Paraho (Development Engineering, Inc.)	Anvil Points	Surface retorting	150-200	Shut down due to lack of funding; 88,225 bbl produced over about one year period.
Rio Blanco (Gulf, Amoco)	Tract C-a, Piceance Basin	Vertical modified in-situ, surface retorting	50,000	Modular program consisting of 5 retorts scheduled for completion by 1982.
Superior Oil	Piceance Creek	Multimineral recovery, surface retorting	13,000	Company seeking land exchange with Federal Government which was denied in Febuary 1980.
TOSCO-Sand Wash	Uinta Basin	Modified in-situ, surface retorting	50,000	Feasibility studies in progress
Union Oil	Parachute Creek	Surface retorting	50,000	Construction of experimental mine and plant scheduled for 1982.
White River (Sohio, Sunoco, Phillips)	Tracts U-a and U-b, Uinta Basin	Modified in-situ, surface retorting	100,000	Operations suspended due to legal proceedings on ownership of lands.

[1]State Locations: Piceance Basin - Colorado; Parachute Creek - Colorado; Uinta County - Utah; Logan Wash - Colorado; Anvil Points - Colorado.

many development problems. Modified in situ processes are a compromise; they require some mining and handling, but offer more process control and easier development.

The crude shale oil produced by retorting will be upgraded by further processing. This upgraded shale, or syncrude, will be used as a refinery feedstock or boiler fuel. It is well suited for refining into middle distillate fuels. If hydrocracking is chosen for the refining process, the yield and range of products is particularly desirable: motor gasoline 17 percent; jet fuel 20 percent; diesel fuel 54 percent; and residuals 9 percent.

Several oil shale projects will begin operation during the 1980s. The technologies, which are proprietary in many cases, appear to be sufficiently mature to move ahead to commercialization. Several retorts have been successfully operated by Geokinetics, Inc., Occidental Oil, Paraho, Union, and TOSCO. Colony, Union Oil, and Occidental Oil have announced plans to begin commercial development in 1980. All technologies have been demonstrated at pilot scale or larger.

Coal Gasification - History and Status

Coal gasification processes have been used in Europe and America since the early nineteenth century to supply the fuel needed to light the streets in major cities. This fuel, known as town gas or, sometimes, as water gas, was made by reacting coal with steam. However, the process was expensive and troublesome to maintain, efficiencies were low, and operation was inevitably dirty. Despite its drawbacks, gas made from coal played a major role in the U.S. well into the 1900s, particularly in supplying markets that were far from natural gas fields but near coal deposits. As late as 1932, the residential gas market in the eastern U.S. was supplied mainly with synthetic gas made from coal. But when long-distance pipelines were constructed during World War II, cheaper natural gas became more convenient nationwide and the use of coal gas in the U.S. declined.

Most coal gasifiers react coal, steam, and oxygen to produce a gas containing carbon monoxide, carbon dioxide, and hydrogen. When air is used as the oxygen source, the product gas contains up to 50 percent nitrogen and is referred to as low-Btu gas because its heat of combustion is only 80 to 150 Btu/standard cubic feet (scf). Synthesis gas or medium-Btu gas ranges from 300 to 500 Btu/scf.

Low-Btu gas is used as a fuel gas near its point of generation because its low heating value makes it uneconomical to distribute over long distances. Medium-Btu gas can be used as a fuel gas and transported economically over distances of up to 200 miles. It can also be used as a chemical feedstock for the production of methanol or gasoline, or can be converted catalytically to substitute natural gas (SNG), having a heating value of about 1,000 Btu/scf. Medium-Btu gasification is an integral part of all indirect liquefaction technologies.

The many coal gasification technologies differ in design and operation, depending upon the type of coal used and the product desired. High- and medium-Btu gasification technologies using noncaking U.S. western coals are relatively well developed. Severe operational problems are encountered with commercially available gasifiers in processing caking coal, such as that found in the eastern U.S. Several gasification technologies for high- and medium-Btu gases are under development (Table 3). Many additional processes are being tested, but are at less advanced stages of development (Table 4).

A fixed-bed gasifier, such as the Lurgi, feeds coal to the top of the gasifier. The descending coal is successively dried, devolatilized, and gasified in contact with gases rising from the bottom. Steam and oxygen are introduced at the bottom of the gasifier, and solid ash is removed through an ash lock. In some gasifiers, such as the British Gas Company (BGC) Lurgi, the temperature at the bottom of the bed is sufficient to melt the ash, allowing its removal as molten slag. The slagging feature provides a distinct advantage in contending with the caking characteristics of eastern U.S. coals.

Lurgi's high-pressure operation, in conjunction with relatively low gasification temperatures, favors the formation of significant quantities of methane in the gasifier, and enhances the heating value of the product. These conditions also favor production of by-products such as tars and impurities like phenols, organic nitrogen compounds, and sulfur compounds.

In fluid-bed gasifiers currently under development, high-velocity gases pass up through the bed to fluidize the coal, providing excellent mixing and temperature uniformity throughout the reactor. Operability with eastern U.S. caking coals, as well as low tar production and tolerance to upsets in fuel rates, have been demonstrated at the pilot scale for both the Westinghouse and U-Gas gasifiers.

The Texaco and Koppers-Totzek gasifiers are representative of entrained-bed technology in which the solid particles are concurrently entrained in the gaseous flow. Flame temperatures range from 1370 to 1925°C, resulting in melting of the coal ash with minimum production of impurities. Entrained-flow gasifiers, which can operate with caking coals, may be favored for the production of synthesis gas for indirect liquefaction. However, compared to fluid-bed gasifiers, they have very low carbon holdup capability in the reactor and, therefore, have limited safeguard against possible formation of an explosive mixture in the reactor in case of coal feed interruption.

There has been extensive commercial experience in the U.S. with low-Btu coal gasification technologies operating near atmospheric pressure. However, these applications have been limited to small-scale captive applications for providing industrial process heat and space heating. For example, the Wellman-Galusha gasifier designed for atmospheric pressure operation was used extensively by industry years before pipeline-supplied natural gas was readily available at comparatively lower cost. Pressurized

TABLE 3. COAL GASIFIERS FOR HIGH-, MEDIUM-, AND LOW-BTU GAS

Process	Process Type	Potential Products	Most Suitable Products	Status
Lurgi Dry Ash	Pressurized fixed bed, dry bottom	Substitute Natural Gas (SNG, also known as High-Btu Gas), Medium-Btu Fuel[a] Gas, Low-Btu Fuel Gas	SNG, Medium-Btu Fuel Gas, Low-Btu Fuel Gas	40 years of commercial development and 14 commercial plants located in Australia, Germany, UK, India, Pakistan, South Africa, Korea. Average module size 800 tons/day (2000 BOE)[c]
British Gas Company (BGC) Lurgi	Pressurized Fixed bed slagging bottom	SNG, Medium-Btu Fuel Gas, Low-Btu Fuel Gas	SNG, Medium-Btu Fuel Gas, Low-Btu Fuel Gas	790 tons/day (of coal) (2000 BOE) pilot plant tested in Westfield, Scotland
Texaco	Pressurized single stage entrained, slurry feed	SNG, Medium-Btu Synthesis Gas, Low-Btu Fuel Gas	Medium-Btu Synthesis[b] Gas	160 ton/day (400 BOE) plant operating in West Germany
U-Gas Institute of Gas Technology (IGT)	Pressurized fluid bed, ash agglomerating	SNG, Medium-Btu Fuel Gas, low-Btu Fuel Gas	Medium-Btu Fuel Gas	14000 tons/day of coal plant (35000 BOE) producing Medium-Btu Fuel Gas, under design for construction in Tennessee
Westinghouse	Pressurized single stage fluid bed, ash agglomerating	SNG, Medium-Btu Fuel Gas, Low-Btu Fuel Gas	SNG, Medium-Btu Fuel Gas	15 ton/day (40 BOE) process development unit, under testing at Waltz Mill, Pa.
Shell Koppers	Pressurized entrained, dry feed	Medium-Btu Synthesis Gas, Low-Btu Fuel Gas	Medium-Btu Synthesis Gas	150 ton/day (400 BOE) pilot plant in operation in W. Germany. 1,000 ton/day scheduled in 1983/1984.
Koppers-Totzek	Atmospheric entrained, dry feed	Medium-Btu Synthesis Gas, Low-Btu Fuel Gas	Medium-Btu Synthesis Gas	1,000 ton/day (2500 BOE) plant in operation in South Africa for the production of ammonia

a Medium-Btu Gas with significant concentration of methane is more suitable for use as fuel, and therefore identified as Medium-Btu Fuel Gas.

b Medium-Btu Gas with low concentration of methane is more suitable for chemical synthesis,ard therefore identified as Medium-Btu Synthesis Gas

c BOE - Barrels per day of oil equivalent

TABLE 4. STATUS OF OTHER COAL GASIFICATION PROCESSES

DEMONSTRATION PLANTS	SCALE (tons/day coal feed)	STATUS
HYGAS	7340	Conceptual Design[a]
COED-COGAS	2210	Detailed Design[b]
U-GAS	3160	Detailed Design
PILOT PLANTS/PDUs		
BELL HIGH MASS FLUX	6	Operational[c]
BIGAS	120	Operational
COMBUSTION ENGINEERING	5	Operational
DOW	24	Under Construction
EXXON CATALYTIC	100	Proposed
GEGAS	24	Operational
HYDRANE	4	Proposed
MOLTEN SALT	24	Operational
MOUNTAIN FUEL	12	Proposed
SYNTHANE	72	Mothballed
TRI-GAS	1	Operational

[a]Conceptual design incorporates all important details of major unit areas in the plant. Material balances are provided around all major unit areas. (Unit area is a section of the plant consisting of several components integrated to perform a single transformation on the product stream. Examples are gasification, raw gas cooling, gas cleanup, or methanation.)

[b]All equipment and detailed pipeline diagrams are prepared as part of detailed design. In addition, detailed material balances are prepared for each piece of equipment.

[c]The plant is either operating or has operated successfully in the past.

gasification processes capable of yielding high-Btu gas for pipelines and medium-Btu gas for chemical feedstocks are less well developed, with the exception of the Lurgi fixed-bed process. The Lurgi process is based on 40 years of commercial development at 14 commercial plants that are located in Australia, Germany, U.K., Korea, India, Pakistan, and South Africa. A great deal of interest in the Lurgi technology is emerging in the U.S., and plans for SNG production have been announced by several pipeline and gas utility companies. Several projects using the Texaco process for captive applications (chemical feedstocks and onsite power generation) are in the planning and design stage with at least one project (Tennessee-Eastman) scheduled for construction in 1980.

Direct and Indirect Coal Liquefaction - History and Status

Coal liquefaction processes have been developed more recently than coal gasification processes. Before World War II, a number of coal liquefaction plants were built in Germany, in anticipation that oil might not be available. Complex, bulky, and expensive as they were, these processes helped to fuel the German war machine. They produced up to 100,000 barrels of transportation fuels a day at the height of the war. Small-scale feasibility studies of German technology were conducted in the U.S. during the 1930s, but the effort was largely ignored because of the discovery of cheaper east Texas oil in 1930. In 1940, U.S. interest revived somewhat, and Congress passed the Synthetic Liquid Fuels Act. The Act provided $85 million in research funds, and two experimental plants were built and operated until the program ended in 1955. Then, just as in 1930, another large oil discovery, this time in the Middle East, killed interest in coal liquids. However, in 1950, South Africa, realizing its total dependence on imported oil for liquid fuels, initiated plans for a 10,000-barrel-per-day plant based on German liquefaction technology. This plant, SASOL I, has been operational since 1956. Today this plant and its sister plant, SASOL II, are the only large-scale commercial facilities in the world producing liquid fuel from coal.

There are two basic types of liquefaction processes--direct and indirect. For direct liquefaction, coal, hydrogen, and a coal-derived oil are mixed at high temperature and pressure. Under these conditions the coal decomposes and the fragments react with hydrogen to form additional derived oil, which is separated from the unreacted solids and further refined to produce usable liquid fuels. Indirect liquefaction processes react the coal with oxygen and steam in a gasifier to produce a synthesis gas composed mainly of carbon monoxide, carbon dioxide, and hydrogen. After the carbon dioxide and other impurities are removed from the gas, the carbon monoxide and hydrogen are chemically combined in a catalytic reactor to produce liquid products for use as chemical feedstocks or liquid fuels.

There are three major direct coal liquefaction processes currently under development: SRC, Exxon Donor Solvent (EDS), and H-Coal (Table 5). These processes differ mainly in the way the hydrogen is made to react with coal fragments to produce the unrefined coal liquids. In the SRC process,

TABLE 5. MAJOR COAL LIQUEFACTION PROCESSES

PROCESS	PROCESS TYPE	PRODUCTS	STATUS
Solvent Refined Coal, SRC II (Gulf Oil)	Direct liquefaction by solvent extraction: coal dissolved in solvent, slurry recycled, catalytic hydrogenation	LPG Naphtha Fuel Oil SNG	Pilot Plant under operation. 6700 ton/day of coal (20,000 barrels/day of oil equivalent) demonstration module under design and schedule for operation in 1984-1985
H-Coal (Hydrocarbon Research, Inc.)	Direct liquefaction by catalytic hydrogenation, ebullated catalyst bed	Naphtha Fuel Oil	600 ton/day (1400 barrels/day of oil equivalent) pilot plant under construction, testing will begin in 1980. Plant is located at Catlettsburg, Kentucky
Exxon Donor Solvent, EDS (Exxon Research and Engineering Company)	Direct liquefaction by extraction and catalytic hydrogenation of recycled donor solvent	Propane Butane Naphtha Fuel Oil	250 ton/day (500 barrels/day of oil equivalent) pilot plant under construction, testing will begin in 1980. Plant is located at Baytown, Texas
Fischer-Tropsch (M.W. Kellogg/Lurgi)	Indirect liquefaction, liquefaction of synthesis gas in a fluid bed catalytic converter	Gasoline LPG Diesel Fuel Heavy Fuel Oil Medium Btu Gas SNG	SASOL I, 800 tons/day, producing over 10,000 bbl day of liquids in commercial production since 1956. SASOL II, 40,000 tons/day, producing over 50,000 bbl day of liquids has been completed and will begin start-up in 1980. SASOL III with approximately the same capacity as SASOL II is currently being planned.
Mobil-M	Indirect liquefaction, liquefaction of synthesis gas in fixed bed using molecular size-specific zeolite catalyst	Gasoline LPG	Commercial scale plant to produce 12,500 barrels of gasoline using reformed natural gas is planned for New Zealand in 1984-1985

the coal feed and hydrogen are mixed with a process recycle stream that contains unreacted coal ash as well as coal-derived oil. The iron pyrite in the unreacted ash catalyzes the reaction between the coal fragments and hydrogen. In the EDS process, the coal feed and hydrogen are mixed with a specially hydrogenated coal oil called the donor solvent. The hydrogen added to the coal fragments is provided by the solvent and the hydrogen gas mixed in the reactor. The donor solvent is made by catalytically hydrogenating coal-derived oil using conventional petroleum refinery hydrotreating technology. In the H-Coal process, the unreacted coal and hydrogen are mixed with coal-derived oil and an added solid catalyst in a special reactor referred to as an ebullated bed.

After the gases and distillable liquid products have been separated from the reactor effluent, the remaining "bottoms" material is processed. This material contains significant quantities of heavy hydrocarbons that must be efficiently utilized to enhance process economics. The principal bottoms processing step under consideration for the EDS process is FLEXICOKING, which consists of thermal cracking of the bottoms to produce additional liquids and coke. The coke is subsequently gasified to produce plant fuel gas or hydrogen for the liquefaction step. Bottoms processing for the SRC and H-Coal processes probably will be partial oxidation (i.e., gasification) to produce hydrogen for the liquefaction step.

There are two major indirect coal liquefaction processes: Fischer-Tropsch, which is commercial now in South Africa; and Mobil-M, which is expected to be commercial in 1983-84. In the Fischer-Tropsch process, the purified synthesis gas from the gasifier is reacted over an iron catalyst to produce a broad range of products extending from lightweight gases to heavy fuel oil. This broad product distribution is generally considered to be a disadvantage where large yields of gasoline are desired. Improved catalysts are currently being developed at the bench scale to maximize the yield of gasoline-range hydrocarbons. In the Mobil-M process, the synthesis gas is first converted to methanol using commercially available technology, and then the methanol is catalytically converted to high-octane gasoline over a molecular-size-specific zeolite catalyst.

Production of methanol from medium-Btu gas, which essentially consists of CO and H_2, could be categorized as an indirect liquefaction process; however, no new process development is necessary for this step. Currently methanol is made from CO and H_2 produced by reforming natural gas.

Indirect coal liquefaction is successfully operating on a commercial scale at the SASOL I plant in South Africa using the Fischer-Tropsch technology. The SASOL I plant produces gasoline, middle distillates (jet fuel, diesel oil), and heavy oil. SASOL II, producing 50,000 barrels per day of coal-derived liquids, has been completed and will begin operation later in 1980. Active interest in this technology has developed and plans to license and construct similar plants in the U.S. are progressing. There is strong interest in the Mobil-M gasoline indirect process because of its

attractive high-octane gasoline yield. A commercial-scale plant producing 12,500 barrels per day of gasoline is planned for operation in New Zealand by 1985.

Direct coal liquefaction technologies are in various stages of development. SRC I and II processes have been tested at the pilot-plant level and are entering into the demonstration-plant stage. The SRC I process produces primarily a solid product with a small amount of useful liquid product; whereas the SRC II process produces primarily liquid products.

Large pilot plants are currently under construction for testing of the H-Coal and EDS processes. These plants are located at Catlettsburg, Kentucky and Baytown, Texas, respectively.

In addition to these major coal liquefaction technologies, several other processes, including the DOW process, Riser Cracking, Synthoil, and the Zinc Halide process, have received attention. All have been tested in small-scale units.

2.1.1.2 Incentives for Synfuel Development

The primary incentive for synfuel development is the imbalance between domestic supply and demand for petroleum liquids and natural gas. The long-term decline in domestic oil production coupled with increased demand has resulted in a level of oil imports of 9 million barrels per day (MMBPD), or about 50 pecrcent of U.S. consumption. The proven domestic reserves of natural gas are also declining and this demand is now being met with increasingly higher priced supplies.

The U.S. will spend almost $90 billion in 1980 for foreign oil. This high import level also reduces jobs and our ability to maintain our economic and national security. A recent study (Reference 1) conducted by the Institute of Gas Technology concluded that the actual benefit to the nation from reducing oil imports is $75.00 per barrel, even though the current cost of oil is only $37.00. The former figure takes into account external benefits, such as the effects on inflation, employment, and national security. These are the considerations, along with the uncertainty inherent in the import supplies, that now provide the impetus for federal support of synfuel development. Recent federal action creating the Synthetic Fuel Corporation (SFC) is aimed at alleviating some of the factors that previously have discouraged development.

2.1.1.3 Nature of Synfuel Industry Development

The development of a synfuel industry will be influenced by certain characteristics of the exising production and marketing infrastructure for oil and gas products. Interviews with potential synfuel producers and users (see Appendix A) indicate that the following considerations are significant:

- The development of the synfuel liquids industry will be dominated by the oil companies. Those technologies that tend to utilize existing capital stock (refineries and distribution systems) will be favored that is, syncrude treated and upgraded for use in existing refineries.

- Those technologies that produce products that more closely conform to current consumption patterns and end use devices will be favored for early development.

- Certain captive markets, for example, chemical feedstocks, may present a special incentive for certain synfuel development (medium-Btu gas) to ensure supplies for production processes.

There are several impediments, however, to the establishment of a viable synfuel industry by the early 1990s. The most important are:

- Capital Requirements. Capital requirements are estimated to range from $30 to $45 thousand per daily barrel of equivalent oil from coal. Thus a 100,000 barrel per day facility (equivalent in size to a medium-sized oil refinery) would cost $3 to $4.5 billion. This cost is 6 times the cost of an equivalent oil refinery. This exceeds the financial capabilities of all but a handful of corporations, and such investments are likely to require preemption of all other corporate objectives.

- Return on Investment. Based on current world oil prices, synthetic fuels could not be produced profitably. Future profitability is uncertain and depends on escalating plant construction cost, future world oil prices, and future raw materials costs. For example, from 1962 to 1978 coal costs in constant dollars have increased faster than oil costs.

- Infrastructure. The expected synfuel industry build-up will demand a coordinated expansion of the entire supporting infrastructure that is necessary for energy product manufacture, distribution, and use. Water, power and transportation networks will have to be expanded or, in remote areas, completely constructed. Community development and labor force expansion will require similar effort. All of this will put tredmendous financial demands on the public and private sectors.

- Permitting. Permitting has been a lengthy and uncertain activity. In addition to the permitting procedure's complexity, at times it is necessary to traverse conflicting unmodified state, local, and federal regulations. Several energy projects have been aborted because of permitting complexities. Facilities as large and complex as commercial-scale synthetic fuel plants will require four to five years to construct. Historically, for many major energy facilities the severe delays caused by permitting and licensing

problems have been longer than the time required for engineering and construction. Delays in these highly capital intensive projects could mean large overruns in project costs and interest penalties. As discussed above, continually changing patterns of environmental and other regulatory requirements have made potential investors reluctant to commit large capital resources to unproven technologies without assurances that regulatory changes will not adversely affect the economic viability of the plant after the projects have begun.

- Technology Risks. Although available technology can reduce engineering and operational risks, such risks are not completely eliminated. The coal and shale facilities will be first-of-a-kind plants. Some of them will be based on, or be a combination of, processes practiced elsewhere, but not in the United States. With a few notable exceptions, plants with the specific configuration best suited to the American market have not been built anywhere.

- Uncertainties about Government Action. Industry also perceives a great deal of uncertainty in how government views synthetic fuels. There is also hesitancy to be the first to build a large plant. First plants tend to have bigger cost overruns, face greater technological risk and design changes, and may have shorter economic lives than subsequent plants.

Recognizing these impediments, federal action has directed the creation of the Synthetic Fuels Corporation with a multibillion dollar budget to encourage the synfuel industry by providing incentives such as price support for products, loan guarantees, direct loans, and government ownership of plants.

2.1.2 Synfuel Industry Build-up Scenarios

Three scenarios or projections of synfuel industry build-up rates to the year 2000 have been developed to illustrate the potential range of synfuel product utilization:

- A national goal scenario driven by federal incentives
- A nominal, or most likely, production scenario
- An accelerated production scenario representing an upper bound for industry build-up.

2.1.2.1 National Goals Scenario - Scenario I

The specific national synfuel goals are:

- Coal Liquids. To stimulate and accelerate the construction and operation of the first few plants to provide sufficient data on the competing commercial coal liquefaction processes so that industry, with its own investment, stimulated by government incentives, if required, will build plants with sufficient energy capacity to provide up to 1 MMBPD of liquid fuels by the year 1992.

- Shale Oil. To stimulate shale oil production at the rate of 0.4 MMBPD by 1990.

- High-Btu Gas. To develop and implement a program that enables the U.S., by 1992, to produce significant quantities of pipeline quality gas (0.5 MMBPD oil equivalent) from commercial HBG plants in an environmentally acceptable manner. This is facilitated by the short-range goal of having two or three commercial HBG plants in operation by the mid-1980s.

- Low-/Medium-Btu Gas. To stimulate an initial near-term commercial capability for several medium-Btu commercial plants for the multiple applications of low-Btu gas in each of the prime industry markets. Once a capability has been established, capacity will be accelerated to achieve at least 0.29 MMBPD oil equivalent by 1992. Of this total, up to 0.04 MMBPD oil equivalent will be provided from 40 to 50 low-Btu facilities and up to 0.25 MMBPD oil equivalent from 25 to 30 medium-Btu plants. The medium-Btu gas production goal includes the amount that is likely to be used for the production of methanol--a-state-of-the-art technology step.

The key assumptions underlying achievement of these goals are: federal funds provided are sufficient to reduce investment risk by the synfuel industry through 1992; and other requirements for industry development are satisfied, that is, environmental permits, material, equipment, and labor. A likely build-up rate profile for the synfuel industries under this scenario is shown in Figure 1.

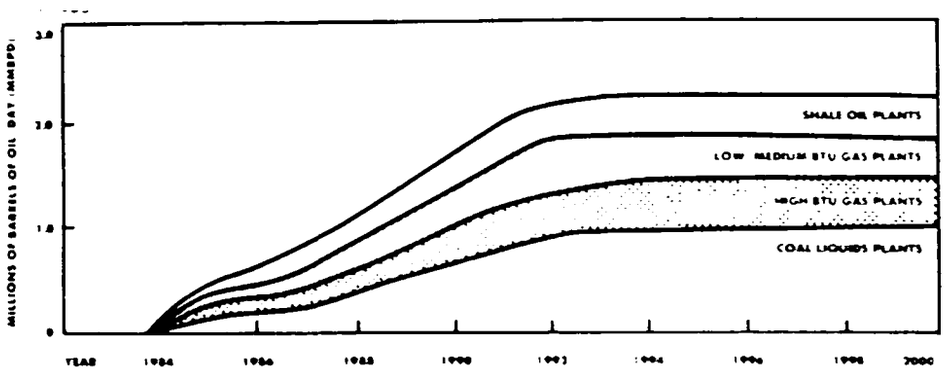

Figure 1. Synfuel Industry Build-up for the National Goal Scenario

The rationale for the curves in Figure 1 is that after the construction of a given production capacity based on the best available technology with federal government incentives, a period of operational

experience gathering will follow in which synfuel economics and technical and environmental performan' 'll be assessed. When this assessment concludes that the investment 's worth taking, further commercial plants will follow. This type of .ry production profile occurred with the federal support of the synth rubber industry during World War II.

2.1.2.2 Nominal Production Scenario - Scenario II

Recent studies of the technical capability of the U.S. to meet the synfuel national goal conclude that there are significant concerns regarding achieving this goal (Ref..ence 2,3,4,5). These concerns include:

- Availability of Skilled Manpower. It is expected that the supply of engineers and construction labor will be severely taxed to meet the synfuel production goal set forth in Scenario I.

- Availability of Critical Equipment. Certain critical equipment such as compressors, heat exchangers, and pressure vessels are expected to be in short supply unless corrective measures are taken now, thus slowing the synfuel industry build-up rate indicated in Scenario I.

- Diversion of Investment to Competing Technologies. Demand on the limited capital available in the economy by competing energy supply technologies, such as coal liquefaction, coal gasification, oil shale, geothermal, and solar technologies, could result in the slowing of build-up rates for some technologies.

- Environmental Data. Lack of environmental data needed for regulatory approvals could slow down the build-up rate.

Furthermore, the response to questions on the subject of synfuel plant build-up asked in the course of interviews with potential suppliers of synfuels as part of this study (Appendix A), indicates that the total synfuel market may develop less rapidly than the national plan. The consensus places total production at 1.0 to 1.5 MMBPD by 1990. According to potential suppliers, the major factors affecting the build-up rate include the degree of government support and the effect of environmental attitudes towards industry, especially regarding the Clean Air Act and water regulations. Potential synfuel suppliers also pointed out that shale oil is probably more nearly cost competitive and closer to commercialization than major coal-derived synfuel products. Taking these concerns into consideration, a nominal synfuel production build-up, Scenario II, was developed (Figure 2). A production rate of about 2.1 MMBPD is estimated by the year 2000, instead of 1992 as indicated in Scenario I. The technologies expected to contribute to both Scenarios I and II are the same. The major difference is in the rate of build-up: Scenario II is slower.

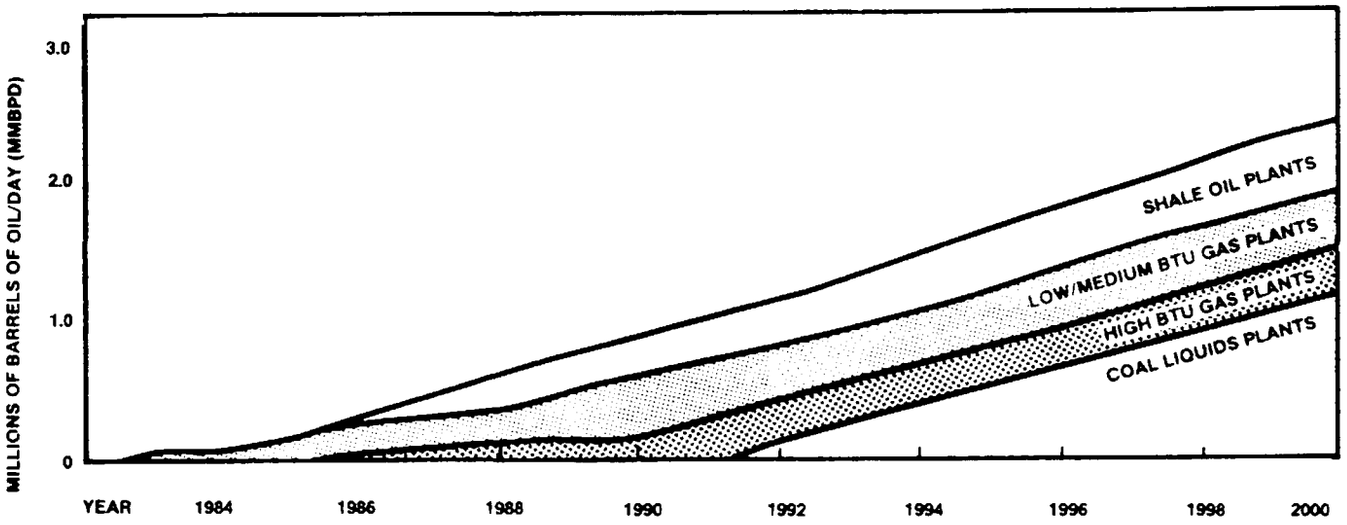

Figure 2. Synfuel Industry Build-Up for the Nominal Production Scenario

2.1.2.3 Accelerated Production - Scenario III

The accelerated production scenario is based on the assumptions that: federal incentives are sufficient to meet the national goals in 1992; operation of synfuel plants up to 1992 is so successful that greater investment in commercialization plants is justified; all resource equipment requirements are satisfied; and licensing/permitting procedures are adequately streamlined. In this case, new plant capacity continues to be added up to the year 2000 at about the same rate as the build-up to 1992. For shale oil, the production of 0.9 MMBPD by the year 2000 is based on a survey and analysis of the desired goals of each industrial developer. Under these conditions, as indicated in Figure 3, a total synfuel production rate of 5 MMBPD could be reached by the year 2000. This includes 2.6 MMBPD of coal liquids, 1.5 MMPBD of gas, and 0.9 MMBPD of shale oil.

Because of the previously discussed limitations facing the synfuels industry, the accelerated production scenario is highly unlikely, and Figure 3 probably shows the upper bound to synfuels utilization over the next 20 years.

2.1.3 Other Synfuel Production Projections

Table 6 includes some recent projections for synfuel production taken from published periodicals or reports. It shows the originating person or organization, the projected synfuel production, and the source. The methods used for these estimates vary, but the most common approach was to

TABLE 6. SYNFUEL PROJECTIONS

Organization	Projection			Source
Eric Reichl, former President of Conoco Coal Development	0.25 MMBPD coal liquids & gas in 1990			Synfuels 3/14/80
Booz, Allen & Hamilton	Medium-Btu Gas-0.7 MMBPD in 1990			Synfuels 3/14/80
	High-Btu Gas -1 MMBPD in 1995			Inside DOE 4/25/80
Frost & Sullivan		1990	2000	Synfuels 2/8/80
	Coal liquids	1-1.5 MMBPD	9.5 MMBPD	
	Coal gas	0.8 MMBPD	2.2 MMBPD	
Exxon		1990	2000	
	Coal gas	0.5 MMBPD	0.7-1.5 MMBPD	Energy Outlook 1980-2000, Exxon Company Publication, Dec. 1979
	Coal & Shale liquids	0.7-1 MMBPD	3.3-4.6 MMBPD	
DOE		2000		
	Coal liquids	0.7-1.8 MMBPD		National Energy
	Coal gas	0.8-1 MMBPD		Plan II
	Shale	0.9-1.3 MMBPD		May 1979
		2000		
Mellon Institute	All Synfuels	2.1 MMBPD		Synfuels 8/22/80
Office of Technology Assessment	Oil Shale	0.4 MMBPD		An Assessment of Oil Shale Technology, June 1, 1980 OTA publication
		1990		
Bankers Trust Co.	All Synfuels	0.5 MMBPD		Synfuels 8/15/80

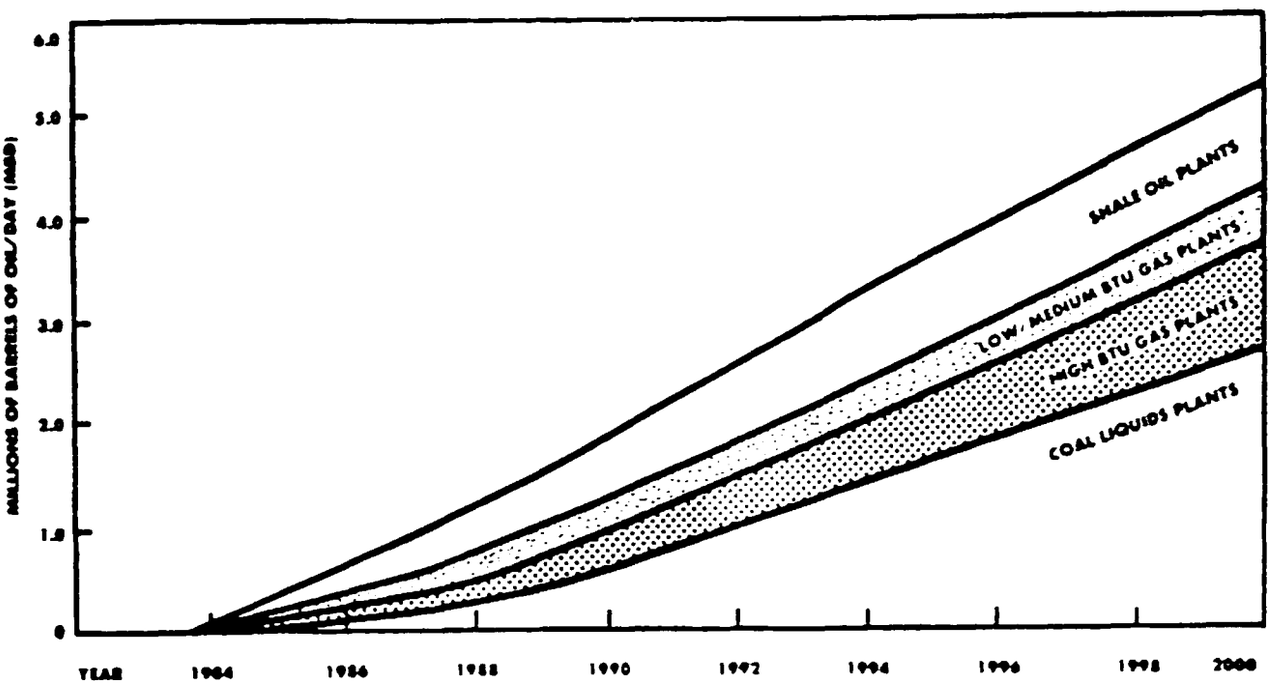

Figure 3. Synfuel Industry Build-Up for the Accelerated Production Scenario

estimate total gas and/or liquids supplies, both domestic and imported; estimate total demand; and assume any differences would be supplied by synfuels.

As can be seen from the table, there exists a wide variance in synfuel production projections. The projections shown range from 0.25 MMBPD of coal-derived synfuels in 1990 to almost 2.3 MMBPD in 1990 and 11.7 MMBPD in 2000. Projections for shale oil production generally range from 0.5 MMBPD to 3 or 4 MMBPD by 2000. The production rates estimated for Scenarios I, II, and III fall well within the ranges of these projections.

2.2 SYNFUEL PLANT AND PRODUCT BUILD-UP SCENARIOS

The previous sections presented three scenarios for the development of the synfuel industry to the year 2000. These scenarios project, by year, the total quantity of shale oil, liquids from coal, and gases from coal that will enter the market. There are many synfuel processes: each has a characteristic product slate, and each product may have a characteristic environmental impact as it enters the transportation- utilization network. Thus, the next step of this analysis of the environmental aspects of synthetic fuels utilization was to consider the major competing synfuel processes and, based on current industry plans and the technical maturity of each process, break down the total production into production by specific process technologies.

2.2.1 Shale Oil

2.2.1.1 Shale Oil Build-Up Rates

The oil shale industry appears to be the most advanced of all synfuel industries in the United States. There are several majors (consortiums and companies) with established projects and plans (Table 2). The technologies, which are proprietary, appear to be sufficiently mature to move ahead to oil shale commercialization. The commercialization of the industry is, however, predicated on several of the factors discussed previously (most notably world oil prices and availability of risk-reducing incentives) and some specific issues:

- Land problems such as land exchanges, leases, unpatented mining claims, and the availability of off-tract disposal sites. More than 80 percent of the oil shale land is owned by the federal government.

- Resolution of environmental issues. Certain majors already have a final EIS enabling them to proceed to commercialization. Colony has a final EIS for a nominal 50,000 BPD complex and Union has an EIS for a 10,000 BPD commercial module demonstration. Other majors will have to obtain permits before they can proceed with commercial operations.

- Availability of skilled labor (e.g., hard rock miners) that is currently in short supply.

- Maturity of technologies (surface retorting technologies are more advanced than modified in-situ technologies).

- Distance of resource location from likely end user regions and the feasibility of upgrading the existing oil transportation system at a reasonable cost.

The development of the oil shale industry as it might proceed under each of the three scenarios is projected based on considerations for each specific project and process.

Tables 7 through 9 summarize the development of the oil shale industry for each of the three scenarios. Both the national goals and nominal production scenarios reach a production rate of 440,000 BPD by the year 2000, but the nominal case builds up more slowly. The accelerated production scenario reaches 930,000 BPD.

The plant build-up rate levels off in the later years based on the assumption that production will remain at the maximum level of a commercial plant with no new capacity coming on-stream before 1990. Where production has not yet reached full plant capacity, it was increased incrementally to accommodate this. It is felt that first-of-a-kind new technologies will be brought on-stream in a careful, calculated, and conservative manner, with

TABLE 7. OIL SHALE PLANT BUILD-UP, SCENARIO I

U.S. OIL SHALE PRODUCTION - THOUSAND BPD

	Projected											Estimated									
Plant/Process	1980	1981	1982	1983	1984	1985	1986	1987	1988	1989	1990	1991	1992	1993	1994	1995	1996	1997	1998	1999	2000
Exxon Oil Corporation/(A)									30	30	37	60	60	60	60	60	60	60	60	60	60
Occidental Oil Shale/(B), Lease Tract C-b (PON)							5	10	20	30	40	50	50	50	50	50	50	50	50	50	50
Geokinetics, Inc./(C), Unita Basin (PON)				2	4	10	12	14	16	18	20	20	20	20	20	20	20	20	20	20	20
Superior Oil (Multimineral)/(D), Piceance Basin					13	13	13	13	13	13	13	13	13	13	13	13	13	13	13	13	13
Tosco Sand Wash/(E), Uinta Basin									21	30	43	47	47	47	47	47	47	47	47	47	47
Union Oil/(F), Long Ridge, Piceance Basin			9	9	9	40	80	90	90	90	90	90	90	90	90	90	90	90	90	90	90
White River Project/(G), Lease Tracts Ua,Ub,Uinta Basin					4	4	4	16	33	50	50	50	50	50	50	50	50	50	50	50	50
Project Rio Blanco/(H), Lease Tract C-a (PON)				4	4	4	14	29	43	58	60	60	60	60	60	60	60	60	60	60	60
Colony/Tosco/(E), Parachute Creek, Piceance Basin				9	9	9	36	47	47	47	47	47	47	47	47	47	47	47	47	47	47
Total			9	24	43	80	164	219	313	366	400	437	437	437	437	437	437	437	437	437	437

*Source: USDOE: Oil Shale Industrialization Action Plan, Feb. 1980

Process:
A - Unknown
B - Vertical modified in situ (MIS)
C - Small, horizontal, in situ retort clusters
D - Surface retort, traveling grate
E - Tosco II
F - Union B
G - Surface retort, Paraho direct and indirect modes
H - Lurgi, surface retort

TABLE 8. OIL SHALE PLANT BUILD-UP, SCENARIO II

U.S. SHALE OIL PRODUCTION - THOUSAND BPD

Company	1983	1984	1985	1986	1987	1988	1989	1990	1991	1992	1993	1994	1995	1996	1997	1998	1999	2000
						ESTIMATED												
Chevron Oil Piceance Basin						25	40	50	50	50	50	50	50	50	50	50	50	50
Mobil Oil Piceance Basin					4	10	10	10	25	40	50	50	50	50	50	50	50	50
Occidental Oil Shale Lease Tract C-b Piceance Basin								15	25	40	50	50	50	50	50	50	50	50
Geokinetics, Inc. Uinta Basin					3	5	10	10	20	20	20	20	20	20	20	20	20	20
Tosco Sand Wash Uinta Basin					25	40	50	50	50	50	50	50	50	50	50	50	50	50
Getty Piceance Basin					5	10	10	10	10	10	10	10	10	10	10	10	10	10
Union Oil Long Ridge, Piceance Basin	9	9	9	-	-	25	40	50	50	50	50	50	50	50	50	50	50	50
White River Project Lease Tracts Ua,Ub, Uinta Basin								25	40	50	50	50	50	50	50	50	50	50
Project Rio Blanco Lease Tract C-a Piceance Basin						25	40	50	50	50	50	50	50	50	50	50	50	50
Colony Parachute Creek, Piceance Basin				25	40	50	50	50	50	50	50	50	50	50	50	50	50	50
TOTAL	9	9	9	25	77	190	250	315	370	410	430	430	430	430	430	430	430	430

TABLE 9. OIL SHALE PLANT BUILD-UP, SCENARIO III

U.S. OIL SHALE PRODUCTION - THOUSAND BPD

	Projected																	Estimated			
Plant/Process	1980	1981	1982	1983	1984	1985	1986	1987	1988	1989	1990	1991	1992	1993	1994	1995	1996	1997	1998	1999	2000
Chevron Oil (A), Piceance Basin				5	10	20	30	40	50	75	100	100	100	100	100	100	100	100	100	100	100
Mobil Oil/(A), Piceance Basin							6	6	30.6	42.5	50	50	50	50	78	91.5	100	100	100	100	100
Occidental Oil Shale/(B), Lease Tract C-b (PON)					6.3	30	50	50	87.5	140	200	200	200	200	200	200	200	200	200	200	200
Geokinetics, Inc./(C) Uinta Basin (PON)			5	5	10	15	25	40	50	50	50	50	50	50	50	50	50	50	50	50	50
Superior Oil (Multimineral) V(D) Piceance Basin						6.7	10	12	12	12	12	12	12	12	12	12	12	12	12	12	12
Tosco Sand Wash/(E), Uinta Basin										25.9	38.4	46.2	46.2	46.2	46.2	46.2	46.2	46.2	46.2	46.2	46.2
Union Oil/(F) Long Ridge, Piceance Basin			8.6	8.6	8.6	27	45	45	45	45	45	45	45	45	45	45	45	45	45	45	45
White River Project/(G) Lease Tracts Ua, Ub, Uinta Basin														45	90	90	90	90	90	90	90
Project Rio Blanco/(B), Least Tract C-a (PON)					19	45.6	76	76	76	76	76	76	90.8	111.6	135	135	135	135	135	135	135
Colony/Tosco/(E), Parachute Creek, Piceance Basin					25.9	38.4	46.2	46.2	46.2	46.2	46.2	46.2	46.2	46.2	46.2	46.2	46.2	46.2	46.2	46.2	46.2
Naval Oil Shale Reserve/(H), Piceance Basin											28	41.5	50	50	50	50	50	50	50	50	50
Demonstration of above Ground Retorting (DOE-PON)/(A)				8	4																
Demonstration of Advanced Retort Technology (DOE-PON)/(A)											8	8									
Carter Oil/(A)							16.8	24.9	30	45	60	60	60	60	60	60	60	60	60	60	60
TOTAL			13.6	26.6	83.8	182.7	305	340.1	427.3	557.6	713.6	734.9	750.2	816.0	912.4	925.9	934.4	934.4	934.4	934.4	934.4

*Source: Denver Research Institute, University of Denver, Oct. 1979

Process: A - Unknown
B - VMIS, surface retort
C - Small, horizontal, in situ retort clusters
D - Surface, circular grate
E - Tosco II
F - Union B
G - Paraho retort, direct and indirect modes
H - Process not selected

maximum production being equal to one commercial plant size. Where projections (e.g., Chevron, Mobil, Occidental in Scenario III; and Union in Scenario I) already show several commercial plants, no attempt has been made to decrease these plant outputs.

The National Goals Scenario

For Scenario I, the development of individual shale oil projects is given according to the United States Department of Energy Oil Shale Industrialization Action Plan, February 1980. Table 7 presents the development schedule as taken from the DOE Action Plan. This scenario is based on interviews with persons in private industry, and considers only those projects at a relatively advanced stage of development.

The Nominal Production Scenario

For Scenario II, the nominal production scenario, the likely development of major oil shale projects is presented to the year 2000. Taking into account the current status of the major oil shale projects, and incorporating the length of time required to go from the current project status to full commercial production, the likely development of the oil shale industry is estimated. Two years are allowed for preparation and approval of an environmental impact statement (EIS), and the current permitting status of several oil shale projects is indicated in Table 10.

TABLE 10. CURRENT PERMITTING STATUS OF OIL SHALE PROJECTS

Project	Status
Occidental	Conditional PSD*
Colony	Final EIS and conditional PSD
Superior	Final EIS, land exchange reversal pending
Paraho	Draft EIS

*Prevention of significant deterioration

In addition, the technical problems peculiar to the process technology (e.g., pilot plant status, scale-up requirements), the probable delays caused by land problems or difficulties in negotiating licensing agreements, and the need for a construction and shake-down period of about four years are taken into account. All of these factors were compiled together to produce the production schedule given in Table 8.

The Accelerated Production Scenario

For Scenario III, the accelerated production scenario, the development of individual oil shale projects is based on a Denver Research Institute survey of the desired goals of industry. Table 9 presents the quantity of shale oil flowing from each project for each year to the year 2000.

Because of the many impediments faced by industry and the short period of time left to resolve the critical issues causing these impediments, the probability that this accelerated scenario will be realized is considered to be low. The way that each project might achieve its goal is outlined in the following paragraphs.

Chevron Project. The Chevron project will use a surface retorting technology, and it is assumed it will be scaled up over a six-year period to 50,000 BPD. A three-dollar-per-barrel tax credit, an investment tax credit, or accelerated depreciation will be necessary to motivate this project, and it is assumed these incentives become available in 1980. Engineering, design, and construction are completed in 1983 for a first module. The plant is expanded and full production of 50,000 BPD is achieved in 1988. Due to the success of the first module, a decision is made in 1987 to double the projected capacity, and the second commercial plant comes on-stream in 1990 for a total capacity of 100,000 BPD.

Mobil Project. It is assumed that incentives are provided in 1982, and over a four-year period a 6,000-BPD module is developed. Two years after successful operation of the module, commercial operation begins on a 56 percent, 83 percent, 100 percent startup profile. Commercial capacity of 50,000 BPD is reached in 1990 and capacity is doubled in 1996.

Occidental Project. Given successful technical results from the Logan Wash pilot operation and the C-b tract work, the Occidental modified in situ (MIS) project is assumed to follow two phases: Phase I producing 50,000 BPD by 1986; and Phase II producing 200,000 BPD by 1990. Of the 200,000 BPD capacity, 62 percent will be MIS and 38 percent will be surface retorting. Phase I begins in 1984 and is scaled up from two retorts to ten retorts over a three-year period. Phase II goes into start-up in 1988 on a 25 percent, 60 percent, 100 percent start-up profile, full capacity being achieved in 1990.

Carter Oil Project (Exxon). This project will require a three-dollar-per-barrel tax credit land exchange and a ten-percent investment tax credit. It is assumed that these incentives are provided by 1982 and that Carter Oil initiates development as soon as the incentives are available. The plant is expected to be expanded from an initial 16,000 BPD in 1986 to 60,000 BPD in 1990 by successive modular additions.

Geokinetics Project. The Geokinetics project will consist of a set of small, horizontal in situ retort clusters, each with a maximum capacity of 5,000 BPD. The following schedule of development is assumed:

Year	Location	Name
1982	Section 2, T145, R224	Hollandberg
1984	Section 23, T125, R20E	Agency Draw #1
1985	Section 13, T135, R20E	Agency Draw #2
1986	Section 36, T125, R22E	Buck Canyon
1986	Section 16, T135, R22E	Sunday School
1987	Section 10, T135, R22E	Wood Canyon
1987	Section 36, T135, R23E	McCook Ridge
1987	Section 16, T135, R24E	Brewer Canyon
1988	Section 2, T135, R24E	Wolf Den #1
1988	Section 36, T125, R24E	Wolf Den #2

White River Project. Prior to beginning this project, the developers must win favorable rulings on land ownerships and unpatented mining claims. We assumed the legal rulings are favorable but not completed until the late 1980's. This paves the way to construction in 1990, start-up in 1993, and production of 90,000 BPD in 1994.

Rio Blanco Project. It is assumed that the economic climate is favorable and that the 1980-81 pilot burns are successful. Construction begins immediately after the pilot production begins in 1984 on a 25 percent, 60 percent, 100 percent start-up profile; and a full commercial production of 76,000 BPD is achieved in 1986. A second phase of construction begins in 1989 after the initial phase has been evaluated. The same start-up profile applies for the second phase, and a production capacity of 135,000 BPD is achieved in 1994.

Superior Oil Project. The Superior Oil Project depends on a federal land exchange before development can begin. We assumed the necessary lands are acquired, and construction begins in 1981 leading to production in 1985. After 1985, a start-up profile of 56%, 83%, 100% is assumed leading to a full capacity of 12,000 BPD in 1987.

Colony/TOSCO Project. We assumed the risks due to environmental regulations and third party suits have been minimized, and financial incentives have been supplied by the government by 1981. Construction commences in 1981, and production begins in 1984 on a 56%, 83%, 100% start up profile reaching a total capacity of 46,200 BPD in 1986.

TOSCO Sand Wash Project. This project follows the same schedule and constraints as the Colony/Tosco project; however, the production schedule is delayed five years as the Colony/Tosco project is evaluated. Production begins in 1989 and reaches its full level in 1991 of 46,200 BPD.

Union Oil Project. We assumed the three dollars per barrel tax credit is passed in 1980 providing adequate incentives for construction to begin immediately. The 10,000 ton/day demonstration plant is assumed to be successful and comes on-stream in 1982 producing 8,6000 BPD. Owing to the

success of the demonstration plant, capaciity is extended to achieve 30,000 BPD by 1986 using 7 retorts each averaging 10,000 tons per day of thirty gallon per ton (avg.) oil shale

Naval Oil Shale Project. Feasibility studies will be used to determine the specific process technologies used to achieve a goal of 50,000 BPD in 1992. A 56 percent, 83 percent, 100 percent start-up profile is assumed to begin in 1990.

Department of Energy Demonstration of Above-Ground Retorting Project. The schedule given in Table 9 is taken from DOE management objectives.

Department of Energy Demonstration of Advanced Retort Project. The schedule given in Table 9 is derived from a private communication with DOE-LETC.

2.2.1.2 Shale Oil Product Build-up Rates

The product and by-product build-up rates for the three scenarios are presented in Figures 4, 5, and 6. These product rates correspond to the projected plant build-up rates and processes identified for each plant. In some cases, such as for Exxon and Chevron where no choice of process has been announced, a shale oil recovery process was arbitrarily assigned. If, when that company begins actual operation, a different process is chosen, the impact on the shale oil industry totals should not be significant. The upgrading process used was either hydrotreating or coking; the particular process applied to each crude shale oil can be determined by the presence or absence of coke.

Three major refining processes were considered coking, fluid catalytic cracking, and hydrocracking (Reference 6). Hydrocracking was chosen for two reasons. First, its yield and range of products were the most desirable. Second, many industry publications, such as the Oil and Gas Journal, report that the use of hydrocracking will grow significantly during the remainder of this century. Typical yields from hydrocracking (Reference 7) are:

Product	Percent Yield
LPG	0
Gasoline	17
Jet fuel	20
Diesel fuel	54
Residues	9

Taking the total production of shale oil as given in Tables 7, 8, and 9, and multiplying the total production by the fraction of each product produced by hydrocracking yields the total flow rates of the final products

from oil shale processing and refining. Classifying jet fuel and diesel fuel as middle distillates, the product flow rates indicated in Figures 4, 5, and 6 are obtained.

The major markets expected to be served are the middle-distillate transportation fuel market (jet and diesel fuels) and the gasoline market. It is anticipated that the refined products will be indistinguishable from petroleum fuel.

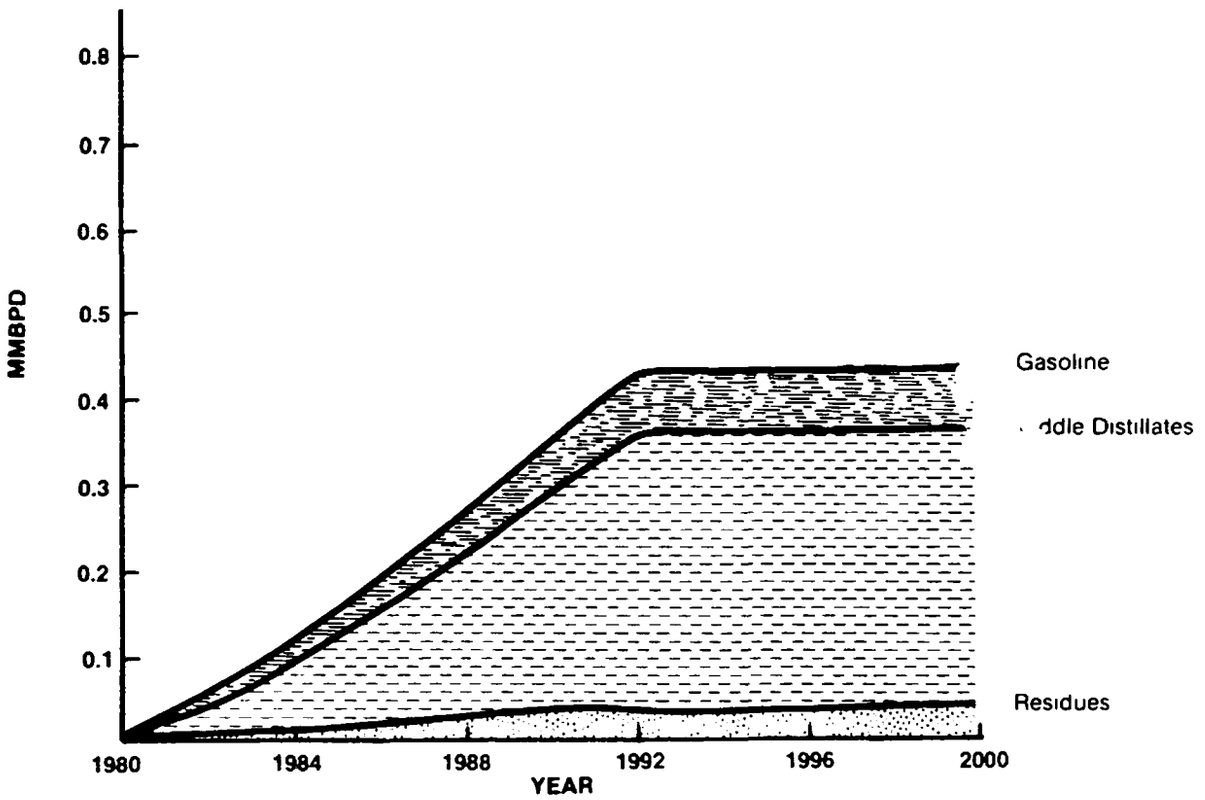

Figure 4. Oil Shale Product Build-Up For Scenario I

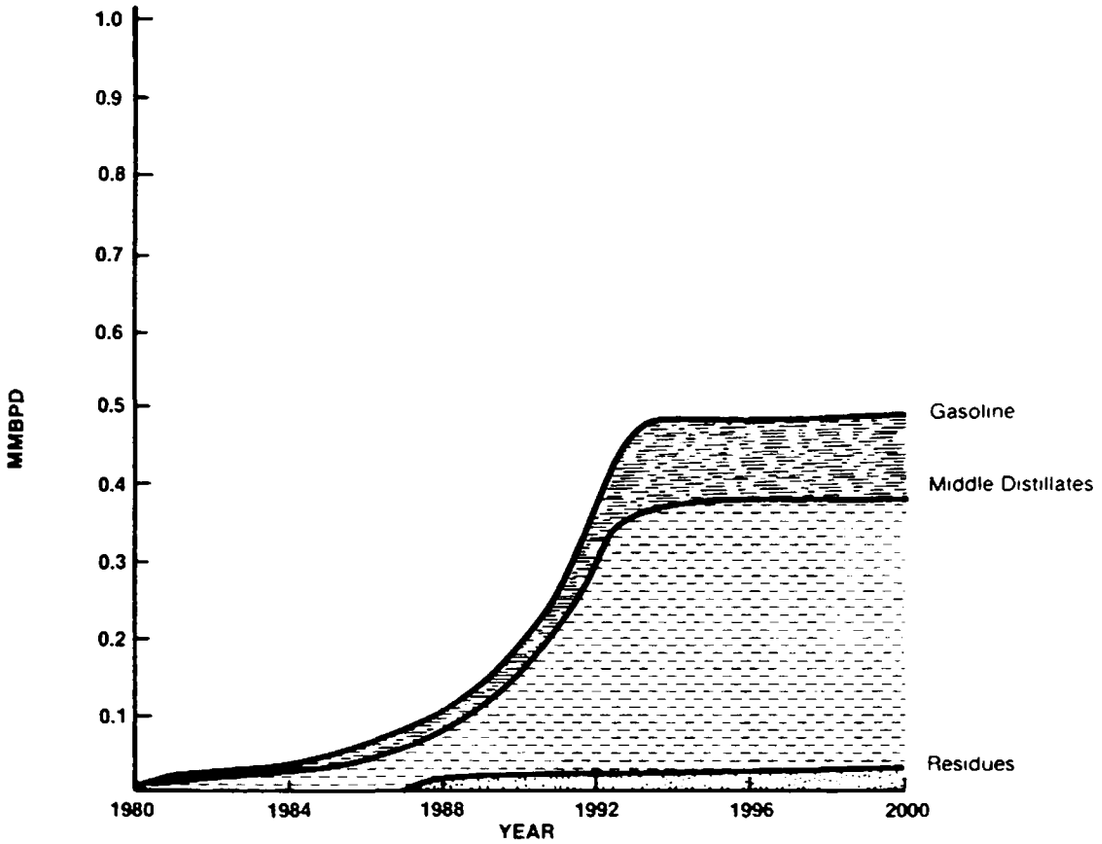

Figure 5. Oil Shale Product Build-Up For Scenario II

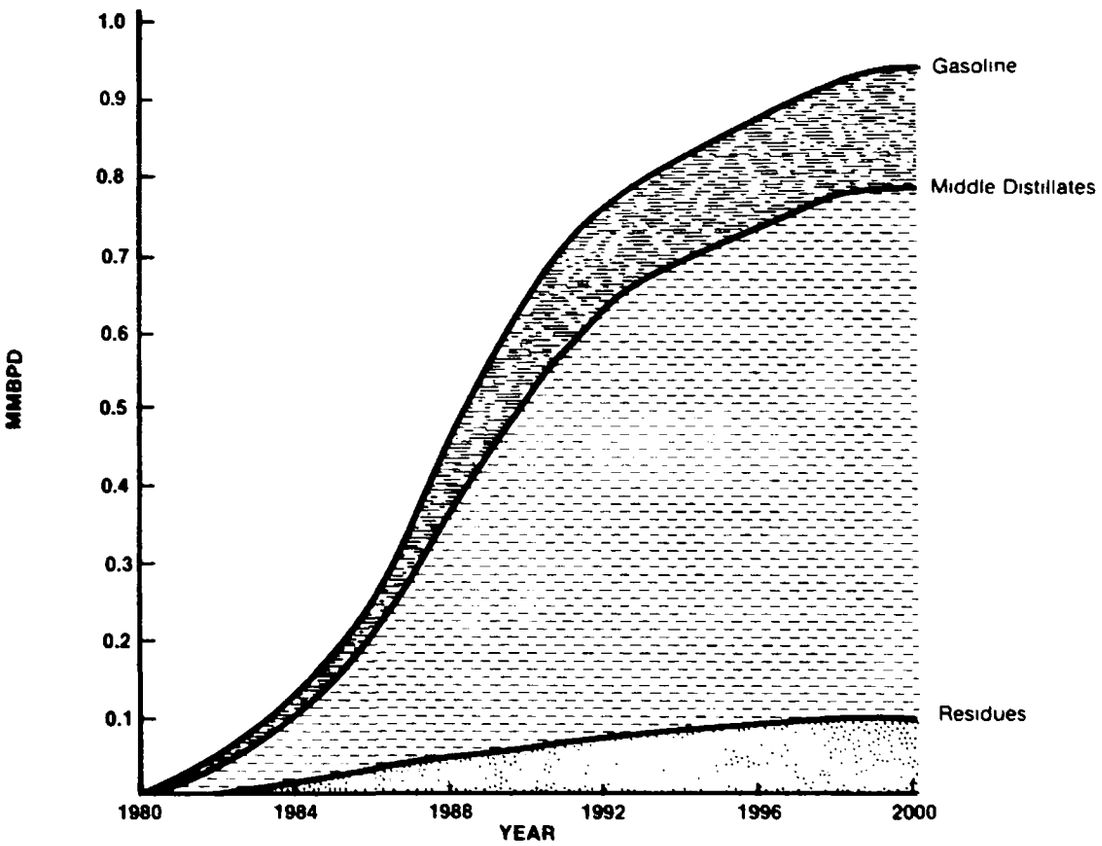

Figure 6. Oil Shale Product Build-Up for Scenario III

2.2.2 Coal Liquefaction and Gasification

The likely contributions of the specific coal liquefaction and gasification processes are considered in this section, in accordance with the overall levels of production given in Scenarios I, II, and III. Coal liquefaction is divided into direct and indirect liquefaction; coal gasification is divided into high- and medium-/low-Btu gasification. The specific processes considered are listed in Table 11.

TABLE 11. PROCESS TECHNOLOGIES UNDER CONSIDERATION

Direct Liquefaction	Indirect Liquefaction	High-Btu Gasification	Med-/Low-Btu Gasification
SRC	Fischer-Tropsch	Lurgi	Lurgi
H-Coal	Mobil-M	Slagging-Lurgi	Texaco Partial Oxidation
EDS	Advanced Indirect	Advanced Fluidized Bed	Advanced Direct

These processes were selected based on technical maturity (Reference 8, 9) and suitability to the end use application. Process technologies not included may play a significant role; however, they produce similar products and will not differ noticeably in their environmental impact.

Additional comment is warranted concerning SRC. There are two major SRC processes earmarked for commercialization: SRC I and SRC II. Traditionally, SRC I produces primarily a solid product, whereas SRC II produces primarily a liquid product. Recently, however, techniques for modifying the SRC I process to produce liquids have been demonstrated at the bench scale (Reference 10). Because the relative viability of the two processes has yet to be determined, and because the final product slates may vary considerably, SRC I and SRC II are both classified together as SRC.

As direct liquefaction technology matures, promising developments (such as short contact time liquefaction) now occurring at the bench scale could develop into commercial processes in the next decade. These processes are likely to have greater yields of gasoline and middle distillate. To make a realistic appraisal of the environmental impact of the utilization of coal liquids, changes in technology over time are considered. Because the precise process that will dominate in the future cannot be predicted, the generic term, advanced direct liquefaction, is used. Similarly, a number of indirect liquefaction processes being developed at the bench scale have shown significant improvements over the conventional Fischer-Tropsch and Mobil-M processes in terms of product yield and quality. These processes could be very important in the 1990's and, therefore,

are considered under the generic name advanced indirect liquefaction. Advanced fluidized bed gasification refers to any circulating, agglomerating, fluidized bed gasifier such as Westinghouse or U-Gas.

2.2.2.1 Coal Liquefaction Plant Build-up Rates

The coal liquefaction plant build-up rates for the three scenarios described in Section 2.2.2 are presented in Tables 12 through 14. These three tables give the cumulative number of 50,000 BPD coal liquefaction plants on-stream for the three time periods 1980-1987, 1988-1992, and 1993-2000. For Scenario I, the national goals scenario, the goal of 1MMBPD of coal liquids by 1992 is met predominately by indirect coal liquefaction (80 percent). Scenario III, accelerated production, builds up at the same rate as Scenario I to 1992, and continues to build up at that rate so that by the year 2000, 2.6 MMBPD is produced. For Scenario I, no new capacity beyond 1992 is projected. For Scenario II, the nominal case, no plants are projected to be on-stream until 1992, with a growth rate beyond that year yielding about 1.0 MMBPD in the year 2000. The rationale supporting projections of specific plant and product build-up rates is outlined in the following paragraphs for each of the three time frames.

1980-1987

The technological status of coal liquefaction during this time can be characterized by the following observations:

- At present, the only commercially demonstrated coal liquefaction process is the Fischer-Tropsch process used in the SASOL plant in

TABLE 12. COAL LIQUEFACTION PLANT BUILD-UP FOR SCENARIO I

Process	Number of Plants on Stream		
	80 - 87	88 - 92	93 - 2000
Indirect Liquefaction			
Fischer-Tropsch	3	7	7
Mobil M	3	8	8
Advanced Indirect		1	1
Direct Liquefaction			
SRC		1	1
H-Coal		1	1
EDS		1	1
Advanced Direct		1	1
Total Indirect Liquefaction	6	16	16
Total Direct Liquefaction		4	4
Total Liquefaction	6	20	20

Note: Numbers indicate cumulative number of 50,000 BPD plants during different time periods.

TABLE 13. COAL LIQUEFACTION PLANT BUILD-UP FOR SCENARIO II

Process	Number of Plants on Stream		
	80 - 87	88 - 92	93 - 2000
Indirect Liquefaction			
Fischer-Tropsch		1	2
Mobil M		1	2
Advanced Indirect			9
Direct Liquefaction*		1	7
Total Indirect Liquefaction		2	13
Total Direct Liquefaction		1	7
Total Liquefaction		3	20

*Process not specified.

Note: Numbers indicate cumulative number to 50,000 BPD plants during different time periods.

TABLE 14. COAL LIQUEFACTION PLANT BUILD-UP FOR SCENARIO III

Process	Number of Plants on Stream		
	80 - 87	88 - 92	93 - 2000
Indirect Liquefaction			
Fischer-Tropsch	3	7	7
Mobil M	3	8	8
Advanced Indirect		1	17
Direct Liquefaction			
SRC		1	2
H-Coal		1	2
EDS		1	2
Advanced Direct		1	14
Total Indirect Liquefaction	6	16	32
Total Direct Liquefaction		4	20
Total Liquefaction	6	20	52

Note: Numbers indicate cumulative number of 50,000 BPD plants during different time periods.

South Africa. This process, which is an example of indirect liquefaction, has been commercially operated since 1956. Currently a new plant incorporating process improvements is in start-up as an expansion program (Reference 11).

- A second indirect liquefaction process, the Mobil-M process, should be commercially demonstrated within this time period (Reference 12). A pilot scale demonstration in Germany is scheduled for 1983, and a commercial plant operating on reformed natural gas is scheduled for operation in New Zealand by 1984.

- At present, there are no commercially demonstrated direct coal liquefaction processes (Reference 8). Exxon Donor Solvent (EDS) and H-Coal pilot plants are scheduled to start operation and assessment of operating data from these plants should be sufficient to determine their commercial readiness and competitive position relative to indirect liquefaction by 1984. In addition, the SRC demonstration plants should be operating by 1984, providing an initial assessment of commercial readiness.

To meet the production schedules suggested by Scenarios I and III, industry, with the federal incentives, must initiate the design and construction of about six coal liquefaction plants early in the 1980-1987 time period and ten additional coal liquefaction plants in the 1980-1987 time period, each plant having a nominal production rate of 50,000 BPD of oil equivalent. The plants must be initiated well in advance of the target date for commercial production because four to five years are required to design, construct, and start up a commercial scale coal liquefaction plant (Reference 13).

Appendix B summarizes the coal liquefaction projects currently being planned or commercially operated by industry. Nine commercial coal liquefaction projects have been identified, and are listed on page B-2. All of these projects use indirect liquefaction processes to produce either methanol or hydrocarbons, with the hydrocarbon processes consisting exclusively of the Fischer-Tropsch technology as embodied in the SASOL plants. Appendix C summarizes the solicitation awards for feasibility studies and cooperative agreements issued recently by the U.S. Department of Energy to promote synfuel projects. These appendices demonstrate that industry and government favor indirect liquefaction over direct liquefaction and that they are confident of the commercial viability of the SASOL technology in the United States.

SASOL has a broad product distribution, whereas Mobil-M produces primarily gasoline, a highly marketable product. However, SASOL has been commercially demonstrated in South Africa, but Mobil-M may not be commercial until after 1984. On balance, it appears at this time that there are equal incentives to develop and build both SASOL and Mobil-M plants, and that their development rates are likely to be the same. Three plants of each type are projected to come on stream during this time frame.

Direct liquefaction is more thermally efficient than indirect liquefaction (Reference 14); therefore, direct liquefaction is likely to play a major role after the successful operation of the demonstration plants. Because direct liquefaction technologies are less advanced technically, there is likely to be no decision to commercialize direct coal liquefaction until the end of the 1980-1987 period. These plants will probably not come on-stream until the 1988-1992 time period, because four to five years will be required to construct them and make them operational. Accordingly, no direct liquefaction plants are projected to come on-stream in the 1980-87 period.

In contrast to Scenarios I and III, the nominal Scenario II does not project any coal liquefaction plant coming on-stream in the 1980-1987 time period. Towards the end of the 1980-1987 time period, it is likely that plans and construction will begin for plants to come on stream in the 1988-1992 period.

1988-1992

The technological status of coal liquefaction in this period is characterized by the following observations:

- Depending on the intensity of commercialization efforts initiated in the 1980-1987 period, varying numbers of indirect coal liquefaction plants embodying both Fischer-Tropsch and Mobil-M technology will come on-stream.

- It is expected that the EDS and H-Coal pilot plants are operating, and the SRC demonstration plants are providing information required for commercial scale-up (Reference 15). In addition, certain advanced concepts (e.g., short contact time liquefaction and Kolbel technology (Reference 16) are likely to be incorporated into the commercial process technologies.

For Scenario I, no new construction will be initiated in this period. For Scenario III, however, a vigorous program of construction will continue. A total of 32 liquefaction plants will come on-stream in the 1993-2000 time frame; this will require the planning of four new plants each year, starting in 1988. The commercial testing of direct liquefaction is likely to be successful and the decision will be made to initiate the construction of four direct liquefaction plants, probably one each for SRC, EDS, H-Coal, and an advanced direct liquefaction process. Also, because of their attractive product distributions deriving from the development of improved catalysts, advanced indirect liquefaction processes will probably remain competitive with direct liquefaction. The remainder of the plants initiated during this time period under Scenario III will likely be indirect liquefaction plants, probably advanced indirect liquefaction.

As indicated previously for the 1980-1987 time frame, Scenario II predicts a significantly less intensive commercial effort than Scenarios I and III. As mentioned in Section 2.1, there are technical and socio-

economic constraints on the development of coal liquefaction. These constraints will probably remain until the late 1990's. For Scenario II, then, it is estimated that a coal liquefaction commercialization program will not be launched until about 1987, at which time a decision will be made to initiate approximately three projects per year, one of direct liquefaction and two of indirect liquefaction. The direct liquefaction processes will probably initially involve the same technology used in 1984, but by about 1990, advanced direct liquefaction should reach commercial readiness and begin to be incorporated into direct liquefaction commercial plants.

Indirect liquefaction plants will initially incorporate SASOL-type Fischer-Tropsch and Mobil-M technologies. Although the pioneer Mobil-M plant initiated in 1984 incorporated fixed-bed Mobil-M technology with a Lurgi gasifier providing the synthesis gas feed, by 1988 the fluid bed technology and Texaco partial oxidation (Reference 8) will likely be commercially ready and incorporated into all future Mobil-M plants. Also by 1990, advanced indirect liquefaction will replace SASOL-type Fischer-Tropsch technology.

1993-2000

For Scenario I, there will be no further build-up of production capacity for the same reasons outlined for shale oil production in the same time frame. On the other hand, Scenario III assumes a continued build-up of production capacity at the rate of about four 50,000 BPD plants per year, reaching a production capacity of 2.6 MMBPD in 2000. The technology used in these plants will probably be evenly split between advanced indirect liquefaction and advanced direct liquefaction.

For the nominal case, Scenario II, production capacity is expected to increase at a rate of about three 50,000 BPD plants per year to the end of the decade and reach an ultimate level of 1.0 MMBPD by the year 2000. During this period, a total of two Mobil-M plants and two Fischer-Tropsch plants will be built, whereas advanced indirect liquefaction plants will be introduced at a rate of about one per year before leveling off at the end of the decade.

2.2.2.2 Coal Gasification Plant Build-up Rates

The coal gasification plant build-up rates for the three scenarios are presented in Tables 15 through 17. These three tables give the cumulative number of 42,000 BPD (250 MMSCFD) high-Btu gasification plants and 30,000 BPD medium-/low-Btu gasification plants on-stream for the three time periods 1980-1987, 1988-1992, and 1993-2000. For Scenario I, 0.6 MMBPD of coal-derived gasification product is produced by 1992. Scenario III builds up at the same rate as Scenario I to year 1992, and continues at that rate so that by the year 2000, 1.5 MMBPD of coal-derived gas is produced. For Scenario II, the 1992 production rate is expected to be only 0.7 MMBPD,

TABLE 15. COAL GASIFICATION PLANT BUILD-UP FOR SCENARIO I

Process	Number of Plants on Stream		
	80 - 87	88 - 92	93 - 2000
High-Btu Gas			
Lurgi Fixed-Bed	7	11	11
Advanced Fluid Bed*		1	1
Low-/Medium-Btu Gas			
Lurgi Fixed-Bed	5	7	7
Texaco Partial Oxidation	1	3	3
Total High-Btu Gas	7	12	12
Total Low-/Medium-Btu Gas	6	10	10

*Example: U-Gas or Westinghouse

Note: Cumulative number fo 42,000 BPD high-Btu plants and 30,000 BPD medium-/low-Btu plants.

TABLE 16. COAL GASIFICATION PLANT BUILD-UP FOR SCENARIO II

Process	Number of Plants on Stream		
	80 - 87	88 - 02	93 - 2000
High-Btu Gas			
Lurgi-Fixed Bed	1	4	4
Slagging Lurgi			2
Medium-Btu Gas			
Lurgi Fixed-Bed	2	6	9
Texaco Partial Oxidation	1	3	6
Total High-Btu Gas	1	4	6
Total Medium-Btu Gas	4	9	15

Note: Cumulative number of 42,000 BPD high-Btu plants and 30,000 BPD medium-/low-Btu plants.

TABLE 17. COAL GASIFICATION PLANT BUILD-UP FOR SCENARIO III

Process	Number of Plants on Stream		
	80 - 88	88 - 92	93 - 2000
High-Btu Gas			
Lurgi Fixed-Bed	7	11	16
Advanced Fluid-Bed*		1	8
Low-/Medium-Btu Gas			
Lurgi Fixed-Bed	5	7	11
Texaco Partial Oxidation	1	3	7
Total High-Btu Gas	7	12	24
Total Low-/Medium-Btu Gas	6	10	18

*Example: U-Gas or Westinghouse

Note: Cumulative number of 42,000-BPD high-Btu plants and 30,000-BPD medium-/low-Btu plants.

with the growth rate beyond that year yielding about 1.0 MMBPD in 2000. The rationale supporting these projections is outlined in the following paragraphs.

1980-1987

The Lurgi fixed-bed gasifier is the leading state-of-the-art high-Btu gasifier (Reference 17); consequently, it will probably be used in all high-Btu gasification plants built in this period. For medium-/low-Btu gasification, the Lurgi gasifier is also currently the leading technology, but it is likely the Texaco partial oxidation process will also play a major role. There has been strong industrial and government interest in the Texaco gasifier (Appendices B and C). The product gas has a very low methane content (desirable for the chemical industry); the Texaco gasifier will run on the caking coals characteristic of the eastern U.S.; a demonstration plant is likely by 1983. Therefore, it is likely there will be at least one commercial Texaco gasifier operating by the end of this period.

The production from the high-Btu gas plants would be used solely as a substitute for natural gas, while the medium-Btu gas would be used for

industrial heat and chemical feedstocks. In all of the scenarios, there will be no production of low-Btu gas for commerce. Any low-Btu gas would be used as fuel gas or used on site for combined cycle power generation.

For Scenarios I and III, seven high-Btu gasification plants equipped with Lurgi gasifiers will come on-stream during this period. For medium-/low-Btu gasification, Lurgi will be the preferred gasifier because of the advanced state of its technology. The Texaco gasifier will also likely play an important role because of current industry interest. One Texaco medium-/low-Btu plant and five Lurgi medium-/low-Btu gas plants are likely to come on-stream during this period for these two scenarios.

For Scenario II, there will be one Lurgi high-Btu gasification plant coming on-stream (the Great Plains project). Three Lurgi plants and one Texaco plant will produce medium-/low-Btu gas during this period.

1988-1992

In Scenarios I and III, it is likely that the slagging Lurgi process (Reference 18) will be demonstrated to be technically viable and it is also likely that the slagging Lurgi process will be more efficient and economical than the conventional fixed-bed Lurgi gasifier. Thus, all new fixed-bed plants initiated in this period will use the slagging technology. Late in this period it is likely that advanced fluid-bed gasification will achieve commercial readiness and four plants using this technology will be initiated.

For Scenario III, additional plants planned for beyond 1992 will use slagging Lurgi fixed-bed gasification, advanced fluid-bed gasification, and Texaco gasification. No new plants will be planned after 1992 under Scenario I.

According to Scenario II, there will be four Lurgi high-Btu gasification plants coming on-stream. In this scenario, the demand for medium-Btu gas is high, encouraging investment in the Texaco gasifier. Six Lurgi plants and three Texaco plants are likely to produce medium-/low-Btu gas during this period.

1992-2000

Within this period, plans will continue for increased gasification capacity under Scenario III at the rate of three high-Btu gas plants and two medium-Btu gas plants every two years. Plans will be initiated for an additional four advanced fluid-bed gasifiers, and by the year 2000 a total of eight advanced fluid-bed gasifiers will be producing high-Btu gas; the remaining high-Btu gasifiers will be slagging Lurgi.

For Scenario II, two high-Btu plants using the slagging Lurgi technology are likely to be initiated in 1988-1992 and will come on-stream

after 1992. For medium-/low-Btu gas, three additional conventional Lurgi fixed-bed gasifiers will come on-stream and three Texaco partial oxidation plants will come on-stream.

2.2.2.3 Coal-Based Synfuel Product Build-Up Rates

In Sections 2.2.2.1 and 2.2.2.2, the number of coal conversion plants on-stream for the three time periods was given in accordance with Scenarios I, II, and III. In this section, the flows of the individual products produced by the coal liquefaction plants are given (Figures 7 through 9). The coal liquefaction products considered are: high-Btu gas, LPG, gasoline, naphtha, middle distillate, and residuals. Each coal gasification process has only a simple major product--either low-, medium-. or high-Btu gas, and the coal gasification build-up rates were considered in Section 2-1.

For each coal conversion process, for each coal feedstock, and for each set of process operating conditions, a distinct product slate results (References 19-24). The product flows presented are taken as most likely given the three scenarios, and are based on the current published design conditions for the processes. A detailed breakdown of the products is taken from the plant design; the products are classified as being high-Btu gas, middle distillate, naphtha, etc.; the flow rates of the products are normalized to a 0.05 MMBPD plant; and then the product flow rates are multiplied by the number of plants given in the plant build-up scenarios to give the total flow for each major product. Although two products may have a similar boiling range, their toxicities may be very different; therefore, placing the products into boiling range and composition categories gives only an approximate understanding of the total magnitude of the environmental problems posed by their transportation and utilization.

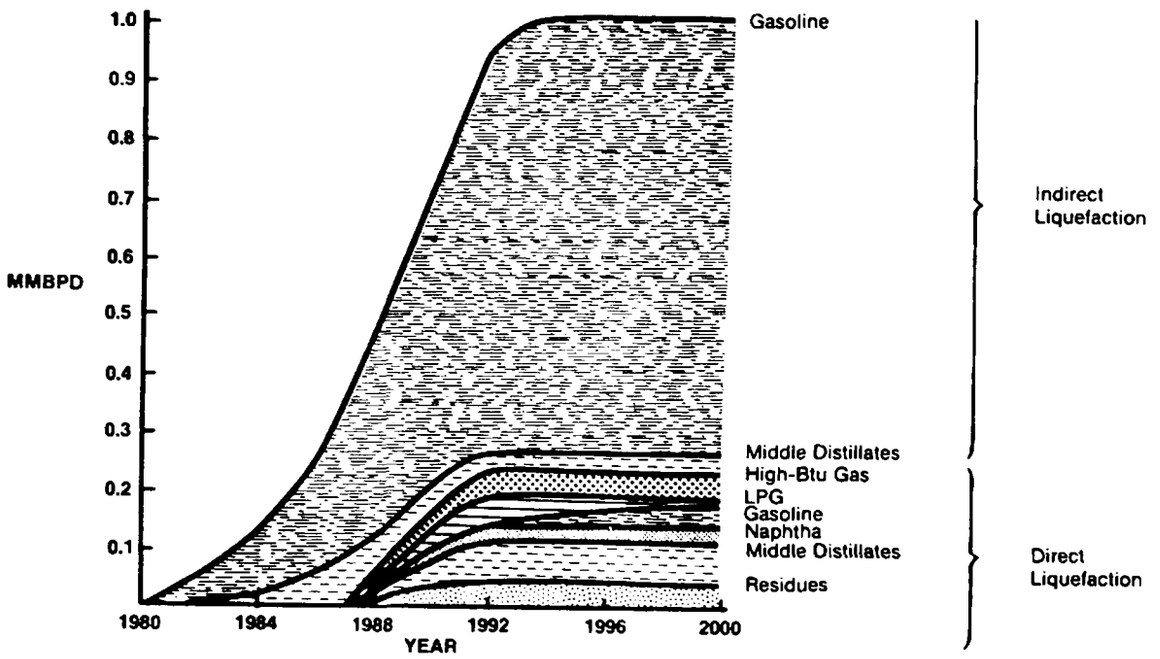

Figure 7. Coal Liquefaction Produce Build-Up for Scenario I

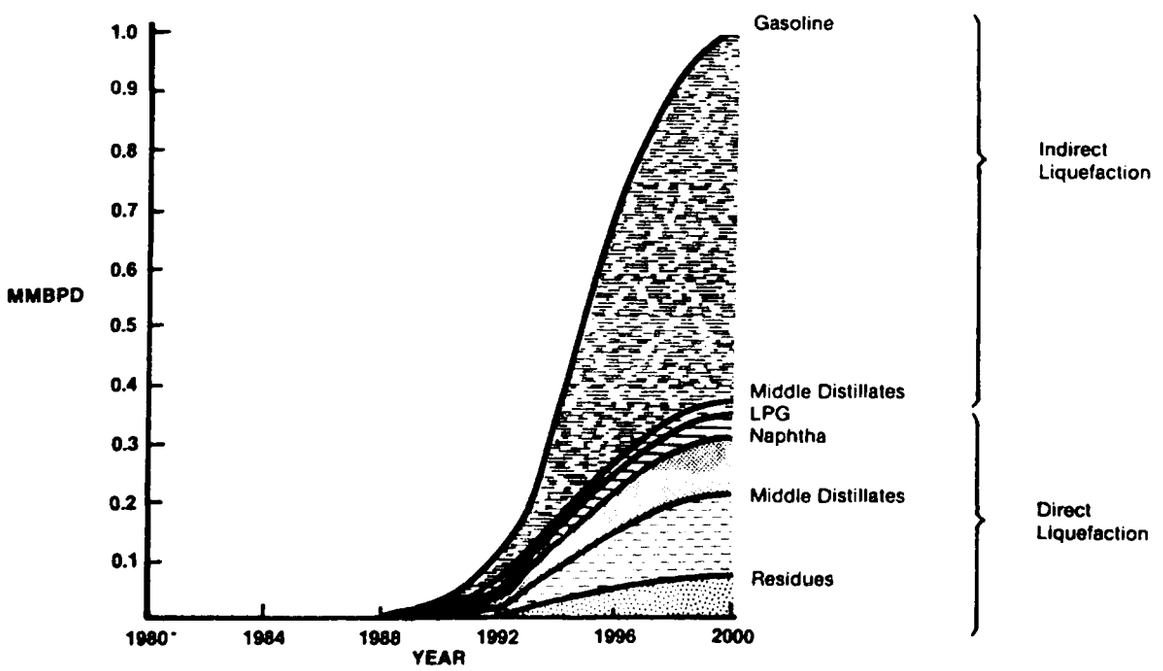

Figure 8. Coal Liquefaction Product Build-Up for Scenario II

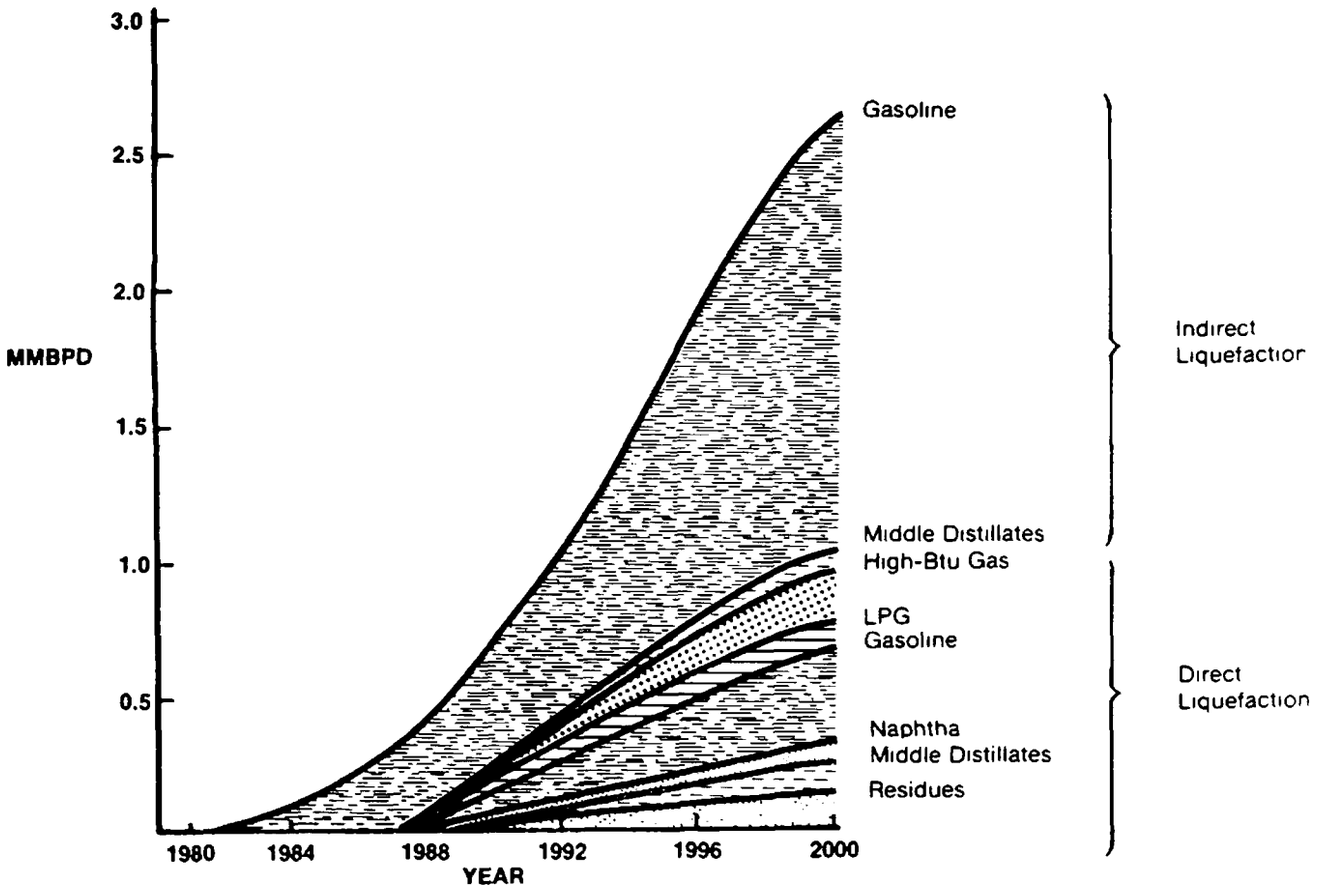

Figure 9. Coal Liquefaction Product Build-Up for Scenario III

SECTION 3

MARKET ANALYSIS OF SYNFUEL PRODUCTS AND BY-PRODUCTS

This section describes an analysis of the regional market development of synfuel products and by-products. This analysis is based on the survey of existing petroleum and natural gas marketing systems discussed in Appendix D and the data developed in Section 2 on the type and number of synfuel plants required to meet the three synfuel production scenarios. Specifically, this section discusses: (1) synfuel plant siting and anticipated regional synfuel production rates; (2) synfuel product utilization; and (3) likely regional distribution and utilization of synfuel products and by-products in the ten federal EPA regions in the U.S. An overview of this section is presented in the next four paragraphs.

The shale-based commercial synfuel plants will be located mostly in the Colorado, Utah region where most oil shale resources are located. However, the exact locations of commercial coal-based synfuels plants are difficult to predict at this time. But it is very likely they will be located in regions with abundant coal resources, which means they will be located in EPA Regions III, IV, V, VI and VIII. The major synfuel products will be gaseous products consisting mainly of high-Btu gas, medium-Btu gas, low-Btu gas, and liquefied petroleum gas; light distillates consisting mainly of gasoline; middle distillates consisting primarily of jet fuel, kerosene, and diesel oil; and residuals consisting mainly of heavy fuel oil; and petrochemicals. The high-Btu gas will be used primarily as a heating fuel in industrial, commerical, and residential sectors as a substitute for natural gas. Medium-Btu gas will be used as a boiler fuel as well as a chemical feedstock. Its primary chemical feedstock use is likely to be for the production of methanol. Low-Btu gas will be limited to on-site use in industrial processes as a fuel and not as a chemical feedstock. Liquefied petroleum gas will be used for domestic heating, as an engine fuel, and for the production of ethylene and propylene, as well as for the manufacture of synthesis gas. Gasoline, which forms the bulk of light distillates, will be used primarily for automobiles. Middle distillates will be used primarily as a industrial, utility, and marine application. They will also be used for the production of lubricants, metallurgical oils, roof coatings, and wood perservative oils.

Shale-derived synfuel will be introduced into the petroleum market around 1985 primarily to serve the transportation market. According to Scenario II, which will be used as a baseline scenario for discussion in this section, as much as 80,000 BPD of shale oil will be produced by 1987.

One major customer of shale oil is likely to be the Department of Defense. Two Air Force Bases in the West--Mountain Home AFB in Idaho and Hill AFB in Utah--will probably be the major users of shale oil for their aircraft testing program. They could consume as much as 20,000 BPD by the late 1980s. The bulk of the remaining shale oil produced is likely to be used within EPA Region VIII (which includes the states of Utah and Colorado), at least during the early years of production. As the production capacity increases starting in the late 1980s, as much as 0.2 MMBPD of shale oil could be shipped via an existing pipeline system to the Midwest region, which is in EPA Region V. There, shale oil is likely to be used mainly by the transportation sector.

The largest and earliest adoption of high-Btu gas production is likely to occur in EPA region VIII as part of the Great Plains gasification project. The gas from this project is likely to enter Region V. High-Btu gas from subsequent plant build-ups in Region VIII will be entering Region VI, that is Iowa, Kansas, Missouri, and Nebraska. High-Btu gas from plants built in Region VI, New Mexico being a likely location, may enter gas markets in Arizona, California, and Nevada which constitute Region IX. Any high-Btu gas from plants built in the Middle Atlantic region, for example in Pennsylvania, will be consumed within the region. As per our nominal scenario (Scenario II), the U.S. could be producing as much as 0.09 MMBPD of medium-Btu gas by 1987. Likely locations are Tennessee, New Mexico, and Montana. These plants are very likely to be used in a captive mode by industries to supply some of their fuel and chemical feedstock needs. For example, they could be utilized by the chemical companies as a source of synthesis gas for the production of methanol and ammonia. During the 1990s when the production of medium-Btu gas is expected to increase substantially, industrial parks consisting of medium-Btu gas facilities with multiple users may come into existence.

Initially, coal-derived petroleum substitutes will be produced by plants using indirect liquefaction processes. These are likely to be located in Region VIII where state-of-the-art technology can use non-caking coal available in that region. Gasoline will be the principal product from these plants. Initially, the bulk of this production will be consumed within the region. Any excess may be shipped to the midwest market. During later years, plants using advanced indirect processes located in the East could be supplying industrial areas of New York and New Jersey. Direct liquefaction facilities are likely to be located primarily on the Illinois, Kentucky, and West Virginia area. Fuel oil will constitute the bulk of direct liquefaction supply. They are likely to be used primarily in the utility, residential, and commercial sectors. Since some of the heavy fuel oil products are not suited for pipeline transportation, they will most likely take advantage of the extensive rail system in the east and midwest. Tank trucks will also move large volumes. Liquefied petroleum gas is another product of direct liquefaction plants. Some of it meant for the petrochemical industry is likely to be shipped to the Texas area where most of the large petrochemical complexes are presently located. The rest could be consumed in the regions where they are produced.

3.1 LIKELY LOCATION OF SYNFUEL PLANTS

3.1.1 Oil Shale Plant Location

The oil shale resource is widely distributed in the United States. However, initial commercial interest centers on the 600 billion barrels of rich resources in the Green River Formation of Colorado, Utah, and Wyoming as indicated in Figure 10. These deposits consist of marlstones containing kerogen, an organic substance from which oil can be derived. Several oil shale projects are presently in different stages of development in Colorado and Utah, both of which are within the jurisdiction of EPA Region VIII. The anticipated progress of these projects serves as a basis for the development of the three oil shale scenarios discussed in Section 2.

The maximum likely hydrotreated shale oil production rates in Colorado and Utah for Scenario II during 1980-1987, 1988-1992, and 1992-2000 are given in Table 18.

TABLE 18. MAXIMUM ANTICIPATED SHALE OIL PRODUCTION RATE FOR SCENARIO II

State	Maximum Production Rate (000BPD) (thousands of barrels per day)		
	1980-1987	1988-1992	1992-2000
Colorado	49	290	310
Utah	28	120	120

3.1.2 Coal Conversion Plant Location

The identification of likely locations for commercial coal conversion plants is more uncertain than for oil shale plants because of the comparative incipient nature of the commercial coal conversion industry. It is anticipated that commercial coal conversion plants will be dispersed throughout the midwestern and eastern states. Their exact location is likely to be governed by a number of factors, some of which are discussed in this section.

The potential coal synfuel resource in the U.S. is 11 trillion tons. The coal resources most likely to be used for synfuel production are shown in Figure 11. Sixty percent of this resource is concentrated in Montana, Illinois, Wyoming, Alaska, and North Dakota. Twenty three percent is located in Colorado, West Virginia, Pennsylvania, and Kentucky. A projected standard size synfuel plant designed to produce 50,000 BPD of oil equivalent synfuel products will require about 20,000 to 40,000 tons of coal per year. Under average conditions of conventional mining and

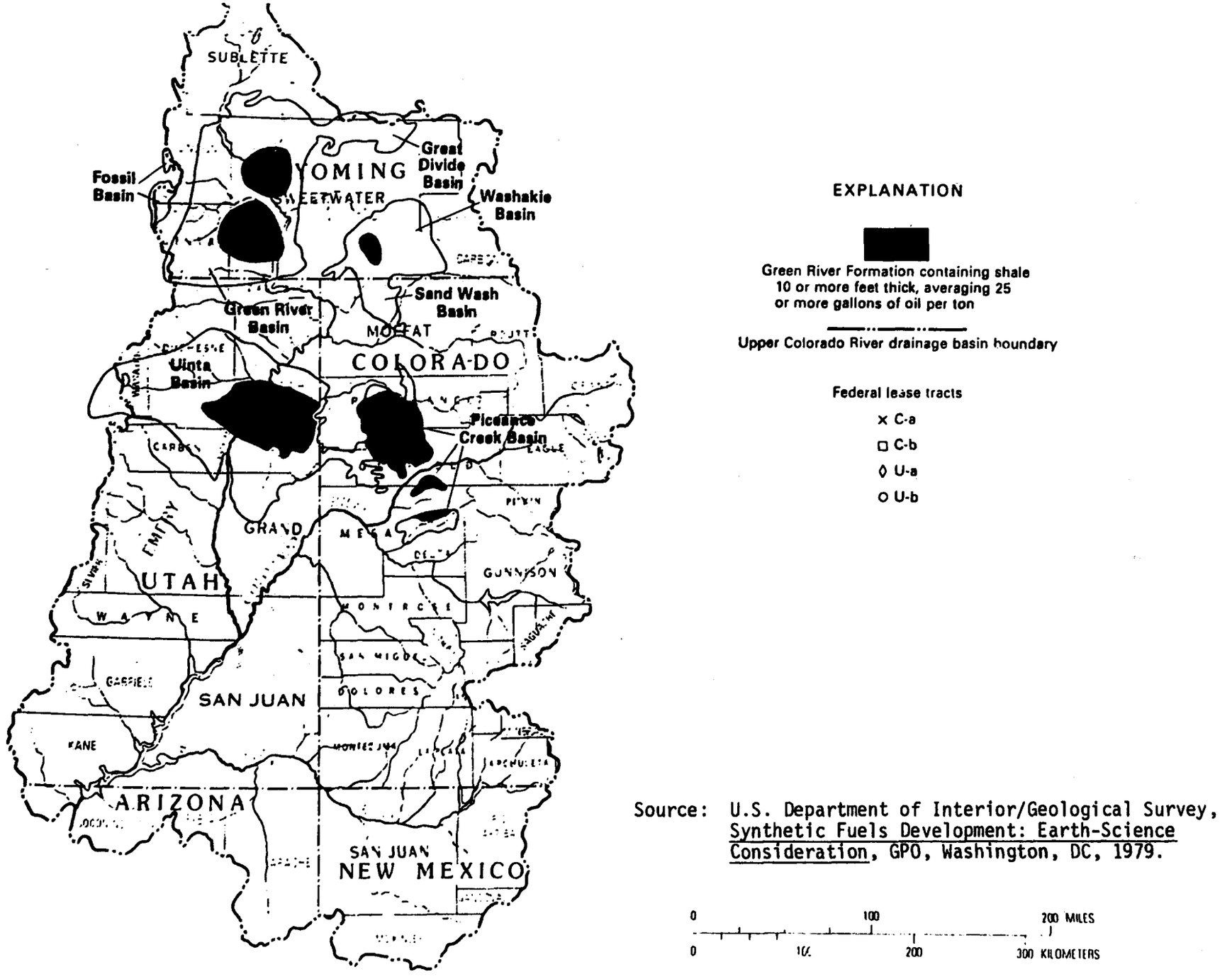

Source: U.S. Department of Interior/Geological Survey, Synthetic Fuels Development: Earth-Science Consideration, GPO, Washington, DC, 1979.

Figure 10. Oil Shale Deposits Most Likely To Be Used for Synfuel Production

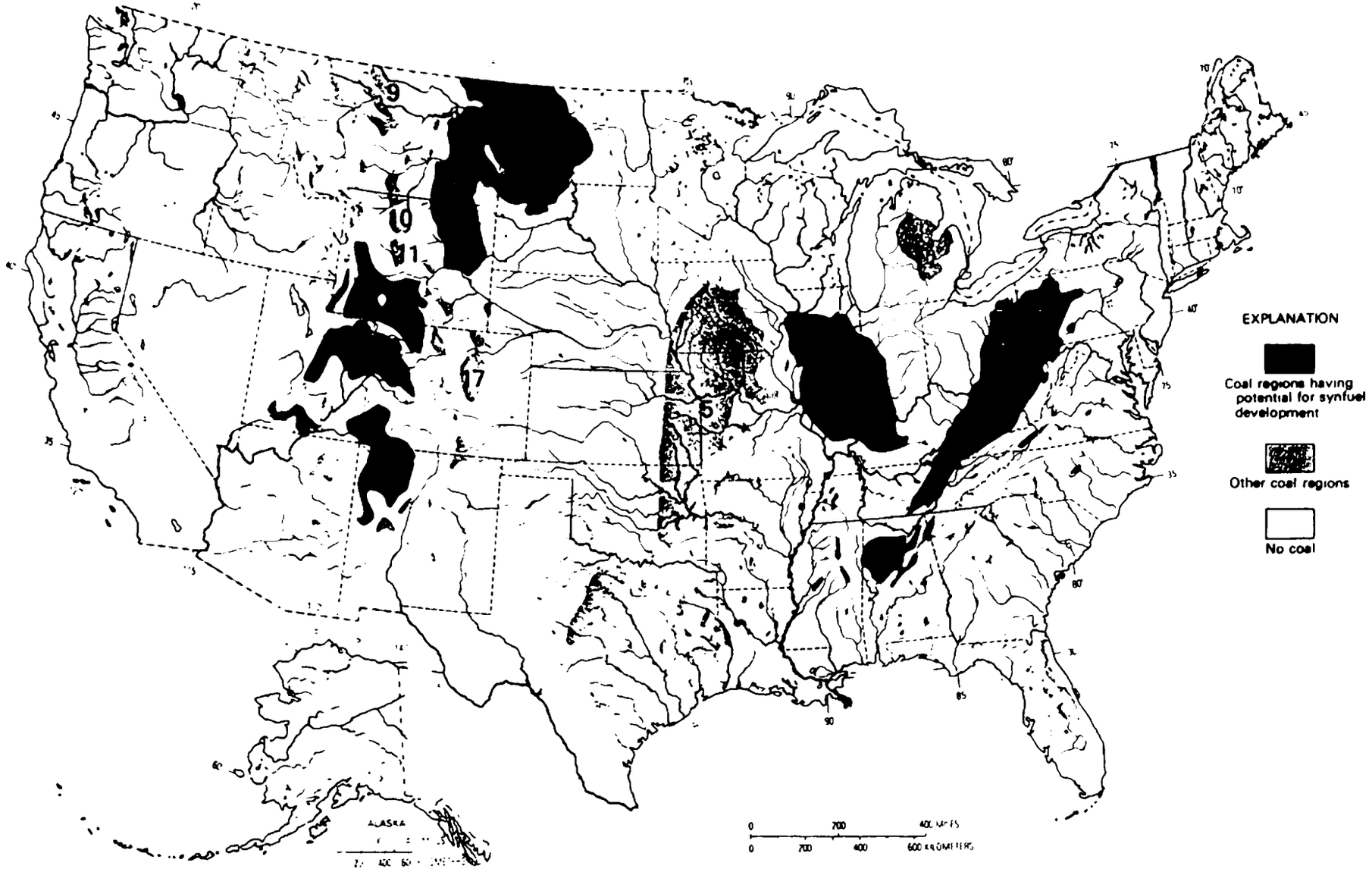

Source: U.S. Department of Interior/Geological Survey, Synthetic Fuels Development: Earth-Science Consideration, GPO, Washington, DC, 1979.

Figure 11. Coal Resources Most Likely to be Used for Synfuel Production

operation, about 12 to 24 million tons of coal reserves will be needed to supply each plant for one year. Over the estimated 30-year life span of a plant, between 360 and 720 million tons of coal reserves will be required. In some coal regions, a substantial part of the identified resources is located in beds that are too thin to meet the present requirements of large-scale mechanized mining. Coal quality differs from deposit to deposit and region to region, and greatly affects the coal's utility for various synfuel processes. The caking tendency of coal is particularly important; first-generation coal conversion technology favors noncaking western coal. These are some of the geologic constraints that govern the location of coal conversion plants. Based on the above geologic constraints, coal synfuel plants will most likely be located in the following five EPA regions: Middle Atlantic (Region III), Southeast (Region IV), Great Lakes (Region V), Southwest (Region VI), and Mountain (Region VIII). These regions are indicated in Figure 12.

Other factors (References 25, 26, 27, 28) that are likely to influence the location are:

- Water availability
- Technology development status
- Proximity to primary markets
- Existing product distribution systems
- Current government- or industry-funded projects
- Industry interest.

A weighted average ranking procedure was developed to take into account these factors for locating the coal synfuel plants in the five chosen EPA regions during different time periods and for different production scenarios. For Scenario II, the results are indicated in Table 19. Coal conversion plants will initially be concentrated in the western states. As the technology advances, more plants are likely to be located in the eastern part of the country.

3.2 SYNFUEL PRODUCT UTILIZATION

The major synfuel products would essentially replace the petroleum and natural gas products currently in use. The products can be grouped into five broad categories:

1. Gaseous Products

   High-Btu gas
   Medium-Btu gas
   Low-Btu gas
   Liquefied petroleum gas (LPG)

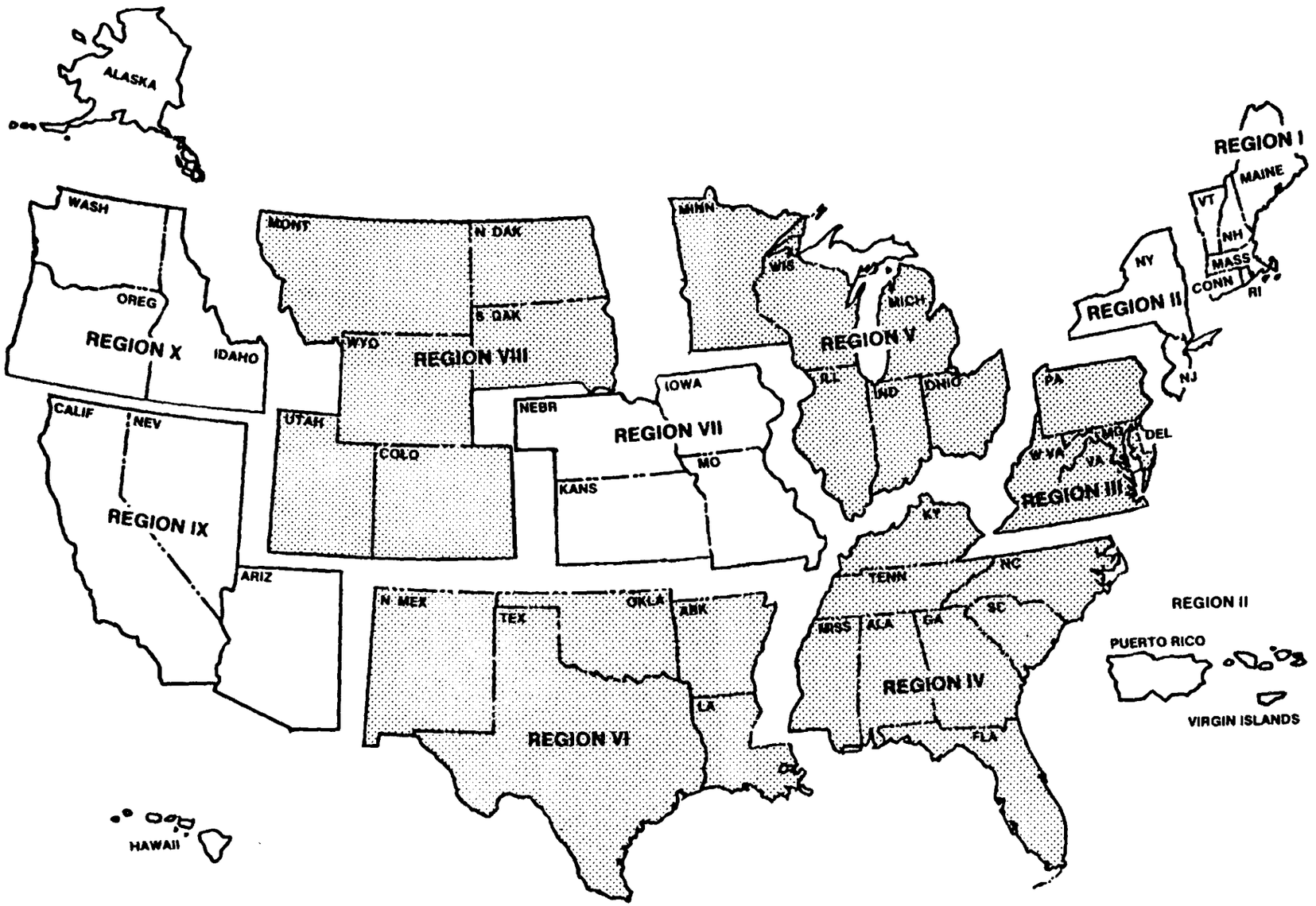

Figure 12. Likely Locations for Synthetic Fuel Plants

TABLE 19. NUMBER OF COAL CONVERSION PLANTS NEEDED ON-STREAM TO MEET THE REQUIREMENTS OF THE NOMINAL PRODUCTION SCENARIO SCENARIO II

Process	Regions	States	Number of Plants on Stream 1980-87	1988-92	1993-2000
Indirect Liquefaction					
Fischer-Tropsch	VIII	North Dakota		1	2
Mobil M	VIII	Wyoming		1	2
Advanced Indirect	IV	Kentucky		-	3
Advanced Indirect	III	Pennsylvania	-		3
Advanced Indirect	III	West Virginia	-	-	3
Subtotal Indirect			-	2	13
Subtotal Product (10^3 BPD)				100	650
Direct Liquefaction	III	West Virginia			1
	IV	Kentucky		-	2
	V	Illinois		1	4
Subtotal Direct				1	7
Subtotal Product (10^3 BPD)				50	350
Total Liquefaction				3	20
Total Product (10^3 BPD)				150	1000
High-Btu Gasification					
Lurgi Fixed-Bed	VIII	North Dakota	1	1	1
Lurgi Fixed-Bed	VIII	Wyoming	-	1	1
Lurgi Fixed-Bed	VIII	Montana	-	1	1
Lurgi Fixed-Bed	VI	New Mexico	-	1	1
Advanced Fluid-Bed	III	Pennsylvania	-	-	2
Total High-Btu Gasification			1	4	6
Total Product (10^3 BPD)			42	168	252
Low/Medium-Btu Gasification					
Lurgi Fixed-Bed	VIII	North Dakota	-	2	3
Lurgi Fixed-Bed	VIII	Montana	1	2	3
Lurgi Fixed-Bed	VI	New Mexico	1	2	3
Texaco Partial Oxidation	IV	Tennessee	1	3	6
Total Low/Medium-Btu Gasification			3	9	15
Total Product (10^3 BPD)			90	270	450
Regional Total Products (10^3 BPD)					
Indirect Liquefaction	VIII			100	200
	IV			-	150
	III				300
Direct Liquefaction	III		-		50
	IV		-	-	100
	V		-	50	200
High-Btu	VIII		42	126	126
	VI		-	42	42
	III		-	-	84
Low/Medium-Btu	VIII		30	120	180
	VI		30	60	90
	III		30	90	180
Total U.S Coal Conversion Products (10^3 BPD)			132	588	1702

2. Light Distillates

   Gasoline
   Naphtha

3. Middle Distillates

   Jet fuel
   Kerosenes
   Diesel oil

4. Residuals

   Heavy fuel oil
   Lubricants
   Wax
   Asphalt

5. Petrochemicals

In general, the suppliers interviewed in this study agreed that there will be no discernible or significant differences in the products produced from synfuels compared to products from petroleum or natural gas. According to the users interviewed, however, it is not clear that current specifications are sufficient to guarantee performance and environmental acceptability. Of the synfuel products being considered, liquid products derived from coal, if used directly, are perceived as most different from conventional products in their composition and toxicity.

3.2.1 Gaseous Products

High-Btu gas offers many of the advantages of direct coal usage but does not have some of the environmental drawbacks of burning coal directly. It has the same heating value as natural gas and, therefore, can substitute for natural gas in almost all its applications. High-Btu gas:

- Can use the vast coal resource base in U.S.
- Can use the extensive existing pipeline network
- Requires no modification or adjustment of the equipment of conventional gas consumers
- Causes very little environmental pollution at the point of consumption.

Its larger application is likely to be as a heating fuel in industrial, commercial, and residential use. However, its possible small-scale use as a fuel for internal combustion engines for stationary and mobile application cannot be ruled out. The possibility also exists for current users of natural gas for chemical feedstock to use high-Btu gas

instead, if it is piped to the plant site at competitive rates. The strongest potential markets for high-Btu gas are likely to be Midwestern and Middle Atlantic regions, primarily as a result of the large quantities of oil consumed in their industrial sectors.

Medium-Btu gas offers many of the advantages of high-Btu gas but at lower cost. It can be burned in existing natural gas- or oil-fired boilers with only minimal expense for retrofitting. Transportation of medium-Btu gas would require a dedicated pipeline, but preliminary evaluations have shown that it can be pipelined up to 200 miles economically. Therefore, it is possible that a medium-Btu gasification plant could, for environmental reasons, be located far from an industrial area and still economically serve the area. Finally, medium-Btu gas is less expensive to produce than high-Btu gas because investment in shift and methanation units is not required, and the energy losses associated with these process steps are avoided. In addition to its utilization as a boiler fuel, medium-Btu gas is a potential source of feedstocks for the chemical industry. Ammonia and methanol are now made from CO and H_2 produced by reforming natural gas. These two basic chemicals have many uses in the manufacture of other more complex chemicals.

It appears that high- and medium-Btu gas will be utilized by major energy-consuming industries such as food, textile, pulp and paper, chemicals, and steel. Only chemical, petroleum, and steel industries will require enough fuel gas at a single location to economically justify the dedication of a single gasification plant. Other industrial plants will have to share the output distributed by pipeline from a central gasifier or tap into existing natural gas pipeline systems for their need.

The major characteristics of low-Btu gas are its high nitrogen content, its low carbon monoxide and hydrogen content, and its resulting heating value--typically below 150 Btu/Scf. Because of its high nitrogen content and low heating value, it cannot be economically pipelined over long distances. A plant producing low-Btu gas would, therefore, have to be located on-site or relatively close to the user. This constraint severely limits the potential size of low-Btu gas plants and would not typically allow the economy of scale that would be gained from large plants serving multiple customers. Low-Btu gas flame temperature is about 13 percent lower than that of natural gas. Because of these characteristics, low-Btu gas is limited to on-site use in industrial processes requiring temperatures below 2800 to 3000°F, and is generally unsuitable for use as a chemical feedstock. Further, because of its low energy density it requires significant equipment modifications for retrofit applications. Today there are operating and planned low-Btu gasifiers in the U.S. for:

- Kiln firing of bricks
- Iron ore pelletizing
- Chemical furnance
- Small boilers.

The three main constituents of LPG are propane, butane, and isobutane. Propane is the lightest of the three, has the lowest vaporization point, and is the most abundant. LPG is liquefied under moderate pressures. At 60°F butane requires pressurization of 40 pounds per square inch or more to be liquefied; propane requires 110 pounds per square inch or more. Butane liquefies under atmospheric pressure at 32°F; propane at -44°F. By contrast, natural gas will not liquefy at atmospheric pressures above -259°F. Liquefying the gas provides a highly efficient and safe method of storing and transporting the product: the fluid occupies only 1/270th the space of the gas, which returns to its natural state when released to the atmosphere under normal pressure. LPG has applications for industrial, domestic, and transportation uses. Although LPG is currently produced either from natural gases or crude oil,. the introduction of coal-based LPG is not likely to affect its use pattern. For domestic application, LPG is used mainly as a fuel for cooking and for water and space heating. It can also power refrigerators and air conditioners. LPG is also used on farms for crop drying, tobacco curing, defoliation, and frost protection. It also powers trucks, pumps, standby generators, and other farm equipment. Commercial establishments such as hotels, motels, and restaurants use LPG much as the homeowner does. As an engine fuel, its minimal emissions allow it to be used indoors, which explains its wide popularity in fork-lift trucks. This same feature makes it a desirable fuel in congested areas for buses, taxis, and delivery trucks. In industry, coal-derived LPG may find a large number of diverse uses. Apart from use as a fuel in processes that require careful temperature control (glass, ceramics, and electronics) or clean combustion gases (drying of milk, coffee, etc.), LPG is also used in the metallurgical industry to produce protective atmospheres for metal cutting and other uses. The chemical industry, particularly on the U.S. Gulf coast, uses petroleum gases for cracking to ethylene and proplyene as well as for manufacturing synthesis gas. Another use of LPG is to enrich lean gas made from other raw materials to establish proper heating value levels. On a volume basis, LPG production in the U.S. exceeds that of kerosene and approaches that of diesel fuel. About 24 percent of LPG production is used by the chemical and synthetic rubber industry, 46 percent is used for residential and commercial use, and 10 percent is used for automotive use: the remaining LPG is distributed among other industrial and agricultural fuel use. By EPA region, the largest amount of LPG (0.36 MMBPD) is at present marketed in Region V. Currently about 70 percent of all LPG is extracted from natural gas and 30 percent is refined from crude oil. With the anticipated shortfall in the supply of these crudes, the resulting shortage of the LPG will be met to some extent by LPG from synfuel plants.

3.2.2 Light Distillates

Gasoline, a major light distillate, is generally defined as a fuel for reciprocating, spark-ignition internal combustion engines for automotive ground vehicles of all types, reciprocating aircraft engines, marine engines, tractors, and lawn mowers. Other small-scale uses include fuel in appliances such as field stoves, heating and lighting units, and blow torches. The primary use of gasoline produced from coal will be for trans-

portation applications. Currently, U.S. consumption of petroleum-derived gasoline is almost 6.8 MMBPD, corresponding to about 40 percent of the total petroleum consumption. Most refiners produce and market more than one grade of motor gasoline, differing principally in anti-knock quality and additives. Refiners also change the volatility properties of their motor fuels, depending on the atmospheric temperatures at which the vehicle is to operate. Winter gasoline is the most volatile and summer gasoline the least volatile.

Naphthas serve many industrial and domestic uses. Their primary market is the petrochemical industry where they can be used to manufacture solvents, varnish, turpentines, rust-proofing compounds, pharmaceuticals, pesticides, herbicides, and fungicides. However, preliminary analyses indicate that a relatively small amount of coal-derived naphthas will enter the market.

3.2.3 Middle Distillates

The markets for middle distillates--essentially jet fuel, kerosene, diesel oil, and heating oil--are jet aircraft, gas turbines, and diesel engines used for transportation and stationary applications, and residential and commercial heating. The major use of distillate fuel in the United States is for central home heating. The distillate heating oil generally falls in the No. 2 classification of the industry's commercial standards and is known as No. 2 fuel oil, as well as by various individual company brand names. Heating oils include petroleum cuts boiling from about 350 to 650°F. They are very much like diesel fuels and, in fact, in some areas these products are interchangeable. Kerosene is another product used for such applications as cooking and sometimes is referred to as No. 1 fuel oil or range oil. Its major advantage over heating oil is that it has a much lower tendency to form carbon deposits. With the introduction of synfuels into the market place it is anticipated that products comparable to those will be derived from petroleum.

3.2.4 Residuals

The market for residuals, consisting mainly of fuel oil, is primarily for industrial, utility, and marine fuel. Fuel oil meeting the specifications of Nos. 4, 5, and 6 fuel oil will come under this category. Currently, petroleum-derived No. 6 fuel oil is probably the most widely used residual product for industrial and utility fuel. Other applications for residuals include preparation of industrial and automotive lubricants, metallurgical oils, roof coatings, and wood preservative oils. Coke is another likely useful product from residue. Wax from synfuel liquid residue is likely to be used for manufacturing sanitary containers, waxed food wrappers, candles, drugs, cosmetics, rubber, textiles, adhesives, crayons, polishes, and paint removers.

3.2.5 Petrochemical Feedstocks and Other By-Products

In addition to their primary use as fuel, many synfuel products are likely to be used by the petrochemical industry as feedstocks for the production of petrochemicals and other byproducts. More than 3000 petrochemicals and byproducts are now derived from petroleum and natural gas-based feedstocks. These include the primary petrochemicals such as ethylene, propylene, benzene, toluene, xylene (B-T-X group), and butadiene. Other petrochemical derivatives include synthetic fibers, plastics, rubber, detergents, solvents, sulfur, ammonia, fertilizers, pesticides, and carbon black. A small percentage of these petrochemicals and other byproducts will be displaced by feedstocks produced from synfuels entering the marketplace.

The primary feedstocks for petrochemicals and other products are likely to be produced from three synfuel feedstock sources: naphtha, medium-Btu gas (synthesis gas), and liquid petroleum gas (LPG). Direct coal liquefaction will be a major source of naphtha. Naphtha may also be produced as a byproduct of some coal gasification processes, for example, the Lurgi gasifier. Medium-Btu gas (synthesis gas) will be used to produce ethane, propane, and butane, which in turn are used as feedstock for the production of petrochemicals and other byproducts. It is expected that about 50 to 75 percent of the medium-Btu gas will be used by the petrochemical industry, with the remainder used for other industrial applications. The use of LPG offers another source for petrochemicals and other byproducts feedstocks. About 24 percent of the LPG produced from synfuels will be used by the petrochemical industry, while the remaining 76 percent will be used by other industries and as an automobile fuel. In addition, some of the other major synfuel products, for example, SNG, syncrude, and methyl fuels, could be used to some extent for petrochemical feedstocks. However, because it is expected that these products will be used primarily to displace current oil and natural gas now servicing transportation, residential, commercial, utilities, and industrial sectors, only a small portion, if any, will be used as feedstocks.

Naphthas may be used in many industrial and domestic applications. In addition to their primary use as feedstock for primary petrochemicals, they can be used to manufacture other byproducts such as solvents, varnish, turpentines, rust-proofing compounds, pharmaceuticals, and pesticides. To further assess the utilization of petrochemical feedstocks and other byproducts, naphtha is discussed in terms of one of its major derivatives, benzene. More data are available for benzene than for the other five primary petrochemicals, which are discussed in Appendix D.

Based on current geographical utilization trends, the Gulf Coastal states, Region VI, and the Great Lakes states, Region V, will be the major consumers of the primary petrochemicals and their derivatives produced from synthetic feedstocks. Region VI will consume about 82 percent of the total benzene produced. Also, it is expected that this region will use 80 percent or more of all the feedstocks produced nationally to manufacture petrochemicals and other byproducts. The Great Lakes region is expected to

be the next largest consumer, using 4 percent. Detailed regional consumption in terms of relative quantities of petrochemicals and other byproducts is discussed in Section 3.3.

3.3 REGIONAL MARKET PENETRATION OF SYNFUEL PRODUCTS

Oil shale-derived synfuels will be introduced into the petroleum market by about 1985, and, based on Scenarios I and II, as much as 0.08 to 0.2 MMBPD of shale oil can enter the market by 1987. The refined shale oil products will primarily serve the needs of transportation sectors. Around 1987, according to the nominal scenario, about one high-Btu gasification plant will be on-stream supplying 0.04 MMBPD of synthetic natural gas to the natural gas pipeline system. By this time two or three medium-Btu gasification plants may also be constructed but will be operated in a captive mode, possibly by chemical industries. The commercial effect of coal liquefaction technology will not be felt until 1992, according to Scenario II. Around that time, it is expected that two indirect liquefaction plants and one direct liquefaction plant may come on line. They will be supplying the transportation, industrial, utility, commercial, and residential markets. However, the true effect of coal liquefaction in the marketplace will not be felt until the 1993-2000 time period, when up to 1 MMBPD of coal-derived liquid products will be entering the market. The likely use pattern of synfuel from different sources is indicated in Figure 13. As much as possible, synfuels are likely to be utilized within or near the region where they are produced. For the purpose of this study, regional classification of the continental United States is based on EPA region. It is also assumed that, as much as possible, synfuels will use existing modes of transportation; no new pipelines are likely to be built for transporting synfuels, except for some feeder lines.

One likely regional build-up of coal conversion plants for Scenario II was indicated earlier in Table 19. This will form the basis for discussing the movement and utilization of coal based synfuel products in our subsequent discussions.

3.3.1 Shale Oil

Oil shale-derived synfuels will be introduced into the petroleum product market around 1985, and, based on Scenario II (the nominal scenario), up to 80,000 BPD of shale oil will be produced in the Colorado-Utah region by 1987. Initially, it is expected that the hydrotreated shale oil will be refined in the Rocky Mountain area either separately or as a blend. Assuming that the hydrocracking refining process, which is likely to yield products that are most desirable, is used, we can expect up to 57,000 BPD of middle distillates, 13,000 BPD of gasoline, and 7,000 BPD of residuals to enter the market. It is very likely that the refined products, which consist mainly of middle distillates, will be entirely absorbed by the transportation sector of the Rocky Mountain Area, Region VIII. This region is currently a net importer of refined transportation fuel. One major customer is likely to be the Department of Defense (DOD). Approximately 90 percent of DOD's current total consumption of 413,000 BPD is mobility fuel. Two Air Force bases in the West Mountain Home AFB in

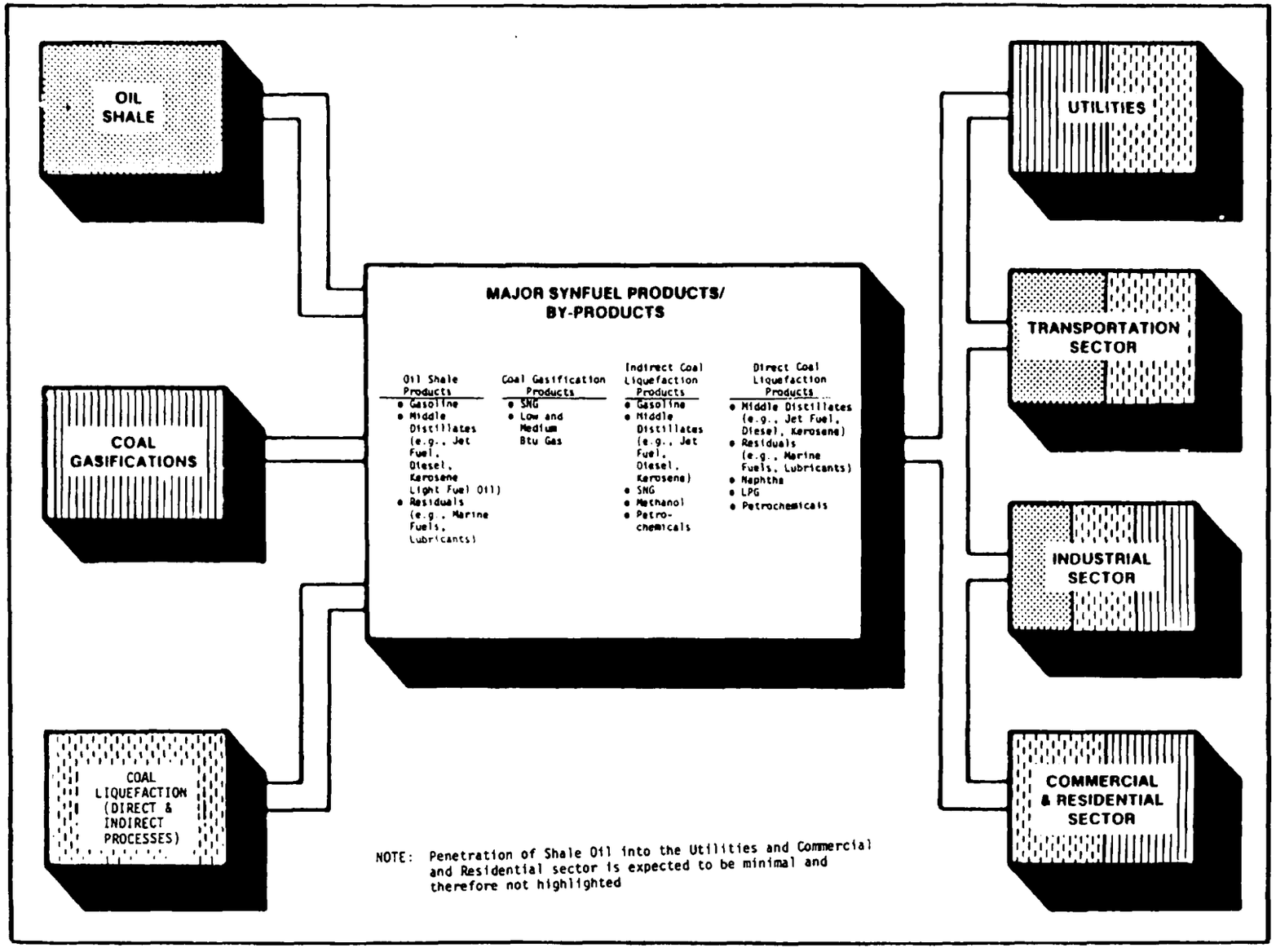

Figure 13. Synfuel Utilization During 1985-2000

Idaho and Hill AFB in Utah plan to switch to 100 percent consumption of synthetic aviation turbine fuel derived from shale oil. Their near-term requirement is likely to be 5,000 to 10,000 BPD for their aircraft testing program. The residual that is produced is likely to be used within EPA Region VIII as boiler fuel in the industrial or utility sector. In view of the small quantity of this initial supply, the residual may possibly be blended with petroleum-derived fuel oil. Most of the petroleum products will be transported by trucks within the region from the refineries.

The shale oil use pattern for Scenarios I and III is not likely to be different during this time period. However, total quantity is likely to be as high as 0.3 MMBPD. During the 1988-92 time period, the quantities of shale oil produced are likely to increase substantially. For Scenario III, production could be as high as 0.75 MMBPD. However, the nominal scenario projects a production rate of only 0.40 MMBPD. During this period, hydrotreated shale oil is likely to be transported to the upper Midwest for refining. According to interviews with potential suppliers (Appendix A), there is currently about 0.2 MMBPD open refinery capacity near Chicago, St. Louis, and Detroit. It is assumed that about 0.2 MMBPD of hydrotreated shale oil could be supplied to the upper Midwest, which essentially belongs to EPA Region V and constitutes a major section of Petroleum Administration for Defense District 2 (PADD2) as well. In Region V there is also a heavy demand for transportation fuel, and shale oil-derived fuel will be used primarily by the transportation sector. This quantity could be as high as 0.2 MMBPD. The residuals, which could amount to 0.03 MMBPD, will be used primarily by the industrial and utility sectors in the region as boiler fuel.

The demand for transportation fuels during the late 1980's is expected to be about 10 MMBPD. Of this, about three to five percent is likely to consumed by the military sector. A large amount of shale oil products could be utilized by the military, possibly with a government synfuel purchase guarantee program. It is possible, therefore, that during this time period, about 10 percent of the 200,000 BPD of refined shale oil products marketed in EPA Region VIII will be supplied to the military, including the two Air Force bases Mountain Home AFB in Idaho and Hill AFB in Utah. The remaining will be consumed by the civilian sector. The use pattern of shale oil during 1993-2000 is not likely to be different.

3.3.2 Coal Gas

3.3.2.1 High-Btu Gas

The national goals scenario (Scenario I) projects that 0.5 MMBPD of oil equivalent gas production could be achieved by 1992. A more realistic scenario that considers impediments to the build-up of high-Btu gas (HBG) production is described by the nominal production scenario, which predicts only 0.17 MMBPD of gas by 1992. An accelerated production schedule of 1 MMBPD by 2000 occurs with Scenario III. For the purpose of discussing the market penetration of HBG, Scenario II is used as a base case.

The largest and earliest adoption of high-Btu gas production will occur in Region VIII (Colorado, Montana, North Dakota, South Dakota, Utah, and Wyoming). Initially, one 0.04-MMBPD capacity plant will come on line in North Dakota during 1980-1987. Construction is now underway in North Dakota on the Great Plains Gasification project. The project is to be completed in two phases: the first phase (0.02 MMBPD) is scheduled for completion in 1984, at which time construction on the second phase (0.02 MMBPD) will begin. HBG from the Great Plains project will enter markets in Region V (Illinois, Indiana, Michigan, Minnesota, Ohio, and Wisconsin) through the addition of a 365-mile, 20-inch SNG pipeline. The largest end use of natural gas in Region V is for space heating. Space heating will consume 60 percent (0.024 MMBPD) of the HBG and an additional 39 percent (0.0156 MMBPD) will be used by the industrial sector (Table D-9, Appendix D). The major industrial natural gas consumers by sales for this area are: (1) primary iron and steel; (2) service industry; (3) fabricated metal products; (4) chemicals and allied products; and (5) the food industry. Extensive storage facilities are located throughout Region V, with 2,760 billion cubic feet of storage space (Table D-8, Appendix D). Additionally, HBG supplied from North Dakota into Region V will remain at 0.04 MMBPD for all three time periods.

During 1988-92, two additional 0.04 MMBPD HBG plants will come on line in Region VIII. One will be located in Montana and the other in Wyoming. Current indications are that this 0.08 MMBPD will be used within the Region VIII natural gas distribution network; however, significant amounts of the HBG production may reach markets in Region VII (Iowa, Kansas, Missouri, and Nebraska) through the addition of the northern border pipeline. Pipeline construction is scheduled to begin in 1981. HBG production may also reach Region VII via a pipeline system to the midwest owned by the participants in the Wycoal project. The Wycoal project has requested funds from DOE to construct a facility that would use Lurgi and Texaco gasification units. Gas from these units in Region VII would be used primarily for space heating by the residential and commercial sectors which consume 50 percent of Region VII's natural gas (see Table D-9, Appendix D). Industrial use amounts to 31 percent of the total consumption, with the largest consumers in the area by sales as follows: (1) electric utility; (2) chemicals; (3) food and kindred products; (4) primary iron and steel; and (5) carbon black (Table D-10). Consumption within Region VIII would be for space heating by the residential and commercial sectors, which currently consume 54 percent of total natural gas consumption (Table D-9). The five largest industrial users by sales for the region are: (1) electric utility; (2) petroleum refining; (3) food and kindred products; (4) chemicals; and (5) services (Table D-10). Additionally, the Crow Indians have requested funds from DOE for a feasibility study of a HBG facility to be located near Billings, Montana.

Region VI (Arkansas, Louisiana, New Mexico, Oklahoma, and Texas) will be producing 0.04 MMBPD of HBG for the periods 1988-92 and 1993-2000; no production is scheduled for 1980-87. At present, New Mexico produces and markets five times more natural gas than it consumes. The bulk of New Mexico natural gas enters markets in Region IX (Arizona, California, and

Nevada). The average daily flow from New Mexico into Region IX is 0.64 MMBPD (4000 MMCFD). Therefore, HBG consumption may occur in New Mexico or Region IX. The greatest consumption of natural gas in New Mexico, 35 percent, is for industrial service (Table D-9) of which electric utility service is the largest consumer. Forty seven percent of the natural gas consumed in Region IX is for space heating in residential and commercial sectors (Table D-9). Industrial use is the next largest consumer, using 30 percent of the total market consumption (Table D-9).

For Region III, two advanced fluid-bed gasifiers are expected to be built in Pennsylvania. Production will total 0.08 MMBPD from these two plants during 1993-2000. No HBG production is expected in Region III during 1980-87 or 1988-92. Consumption of the HBG will occur entirely within the Pennsylvania natural gas system. According to Table D-9, almost 59 percent (0.0472 MMBPD) of the total 0.08 MMBPD HBG would be consumed by the residential and commercial sectors for space heating. Another 37 percent (0.0296 MMBPD) would be consumed by the industrial sector. The five largest industrial users of natural gas by sales for the middle atlantic states (New Jersey, New York, and Pennsylvania) are: (1) primary iron and steel; (2) glass products; (3) fabricated metal products; (4) chemicals, and (5) manufacturing. Current information (Table D-9) indicates that storage facilities in Pennsylvania are used at capacity levels; consequently, HBG production would be displacing current natural gas supplies from production fields in the southern U.S. Pennsylvania's ultimate reservoir capacity is 800 billion cubic feet.

The preceeding analysis was concerned with the most likely production build-up of HBG production Scenario II. Scenarios I and III are more optimistic in their predictions of HBG build-up. The siting, transportation routes, and end-use patterns in Scenarios I and III are similar to Scenario II.

Scenario I sites HBG facilities in Regions III and VIII. For 1980-87, seven plants (0.28 MMBPD) are scheduled to come on line in Region VIII. Eleven plants (0.44 MMBPD) will be in operation during 1988-92 and 1993-2000. No HBG production is scheduled in Region III for 1980-87, but one (0.04 MMBPD) plant is scheduled for 1988-92 and 1993-2000. End-use consumption will remain the same.

Scenario III sites HBG facilities in Regions III and VIII. Region VIII production is the same as for Scenario I (0.28 MMBPD in 1980-87, 0.44 MMBPD in 1988-92) except for 1993-2000. Production will then increase to 0.64 MMBPD from 16 plants. Region III is also the same for 1980-87, no production is scheduled; 0.04 MMBPD is planned for 1988-1992; and production will increase to 0.32 MMBPD from 8 plants in 1993-2000.

3.3.2.2 Low-/Medium Btu Gas

Scenario II sites medium-Btu gasification facilities in EPA regions IV, VI, and VIII. For 1980-87, approximately 0.09 MMBPD of MBG is scheduled for production. Likely locations are Tennessee, New Mexico, and

Montana. The medium-Btu gas could be used as a synthesis gas for producing chemical products such as ammonia, which in turn could be used to manufacture such products as fertilizers, fiber and plastic intermediates, and explosives. During this time it is likely that one or two of these plants could be producing methanol as well. The plant might be owned by an industrial company primarily to serve its internal needs, which could be to produce methanol or formaldehyde, a product with a number of end-use applications. Some of the methanol produced during this time period could possibly be utilized by organizations like EPRI to test its usefulness as a turbine fuel. Interested organizations could test it for automobile use also, but it is unlikely that methanol from these plants would enter the open market directly on a large scale for public consumption. One reason is the lack of a suitable marketing infrastructure. This fact was reinforced in the course of interviews conducted as part of this study. In any case, not more than 40 percent of medium-Btu gas production in the country is likely to be converted to methanol. The most likely users of medium-Btu gas will be the chemical, steel, and primary metal industries. Chemical industry use would be primarily as a feedstock; steel industry use would be primarily for blast furnace injection; and primary metal use would include annealing operations and burner application. For 1988-92 and 1993-2000, the medium-Btu gas production could be 0.27 MMBPD and 0.45 MMBPD respectively. During these periods, industrial parks consisting of medium-Btu gas facilities with multiple users may come into existence.

During the different time periods, the use of low-Btu gas will be limited to industrial fuel in such applications as kilns, chemical furnaces, and small boilers. Currently there are about 15 to 20 facilities in the U.S. that use, or are in the process of beginning to use, low-Btu gas for applications such as brick kilns, chemical furnaces, space heating, and metal-process furnaces. The operators of these facilities include General Motors Corporation, Caterpillar Tractors, and Dow Chemical Company. By 1980-87 the number of low-Btu facilities may be about 35, increasing to about 45 by 1992. During 1988-92, the use of low-Btu gasification by utilities in one or two demonstration units for combined cycle application cannot be ruled out.

Scenario II is much more optimistic about the use of low-/medium-Btu gas for different applications than is Scenario I. The Scenario II projection for low-/medium-Btu gas by 2000 is 0.45 MMBPD, compared to 0.3 MMBPD projected in Scenario I.

3.3.3 Coal Liquefaction Products

A synfuel production build-up in line with national goals, as proposed by the Synthetic Fuels Corporation, calls for a preliminary goal of 0.5 MMBPD by 1987 and 2 MMBPD by 1992. But realization of this goal is contingent on adequate federal funding; availability of material, equipment, and labor; and smooth environmental permitting. Presently the Fischer-Tropsch process is the only commercially demonstrated coal liquefaction process, with the Mobil-M process ready for full-scale production within the next five years. In recognition of the current state of the art,

perhaps a more realistic leadtime and subsequent build-up of coal liquefaction plants is embodied in a scenario that projects no large-scale liquefaction plants until 1992. This nominal production scenario projects a yield of 1 MMBPD by the year 2000.

This section investigates the direct and indirect coal liquefaction facilities as projected, primarily, under Scenario II. The emphasis here is on the movement of coal liquid crude or final products from liquefaction plants to markets. Direct and indirect liquefaction are treated separately because of their different products and projected geographic locations. Based on likely plant sitings for Scenario II, the quantities of different coal liquid products that are likely to be produced in different EPA regions are indicated in Table 20. In addition to these products, the Fischer-Tropsch process is likely to produce phenol and tar oil products as well, which may be as much as 50 and 35 percent respectively by volume of gasoline production.

3.3.3.1 Indirect Coal Liquefaction Products

Based on the plant build-up schedule, the nominal scenario (Scenario II) projects two indirect liquefaction plants by 1992 and 13 by the year 2000. North Dakota and Wyoming could be the first to actually produce, with Kentucky, Pennsylvania, and West Virginia surpassing western production by the turn of the century.

SNG and gasoline constitute the bulk of indirect liquefaction products. Depending upon the location of individual plants, pipelines may be used to ship these products.

EPA Region VIII, North Dakota and Wyoming, is expected to be the location of initial commercial production of coal liquids using primarily the Fischer-Tropsch and Mobil-M processes. Using 1978 consumption as a reference point for the use of gasoline and natural gas, it appears that coal liquefaction products will satisfy only a part of local regional demand. Currently, natural gas is used primarily in the residential (32 percent) and industrial (37 percent) sectors. SNG from indirect coal liquefaction will most likely help satisfy this local regional demand. SNG will move to areas of demand through the existing and proposed pipeline network. Pipelines in the vicinity of proposed plants for EPA region VIII are:

Plant Location	Existing and Proposed Pipelines (Ref. 30)
North Dakota	Montana-Dakotas Utilities Co. (existing) Northern Border Pipeline Co. (proposed, 1981) Pipeline from Great Plains Project (proposed) (Ref. 29)

TABLE 20. TYPES AND QUANTITIES OF COAL CONVERSION PRODUCTS PRODUCED FROM PLANTS ON STREAM FOR THE NOMINAL PRODUCTION SCENARIO SCENARIO II

Process/Products	Regions	States	Products Produced (10^3 BPD)* 1980-87	1988-92	1993-2000
Indirect Liquefaction					
Fischer-Tropsch	VII	North Dakota			
SNG				32.60	65 20
Gasoline				14.50	29.00
LPG				0.10	0.20
Diesel Fuel				2 50	5 00
Residues				0.70	1.40
Mobil-M	VIII	Wyoming			
Gasoline			-	50.00	100 00
Advanced Indirect	IV	Kentucky			
Gasoline			--		150 00
Advanced Indirect	III	Pennsylvania			
Gasoline					150 00
Advanced Indirect	III	West Virginia	-	-	150 00
Subtotal Products			-	100 00	650 00
Direct Liquefaction	III	West Virginia			
Naphtha					15 40
Middle Distillates			-		18 70
Residues			-		10 00
LPG					5 90
Naphtha	IV	Kentucky			30 80
Middle Distillates					37 40
Residues					20.00
LPG					11.80
	V	Illinois			
Naphtha				15.40	61.60
Middle Distillates				18 70	74 80
Residues				10.00	40 00
LPG				5.90	26.60
Subtotal Products				50.00	350.00
Total Products				150.00	1000 00
High-Btu Gasification					
Lurgi Fixed-Bed	VIII	North Dakota			
SNG			42.00	42 00	42.00
Lurgi Fixed-Bed	VIII	Wyoming			
SNG				42 00	42 00
Lurgi Fixed-Bed	VIII	Montana			
SNG				42 00	42 00
Lurgi Fixed-Bed	VI	New Mexico			
SNG				42.00	42 00
Advanced Fluid-Bed	III	Pennsylvania			
SNG					82 00
Total Product			42.00	168 00	252.00
Low/Medium-Btu Gasification					
Lurgi Fixed-Bed	VIII	North Dakota			
Medium-Btu				60.00	90 00
Lurgi Fixed-Bed	VIII	Montana			
Medium-Btu			30 00	60 00	90 00

(continued)

TABLE 20. (CONTINUED)

Process/Products	Regions	States	Products Produced (10^3 BPD)* 1980-87	1988-92	1993-2000
Lurgi Fixed-Bed	VI	New Mexico			
Medium-Btu			30 00	60.00	90.00
Texaco Partial Oxidation	IV	Tennessee			
Medium-Btu			30.00	90.00	180.00
Total Product			90.00	270.00	450.00
Regional Total Products					
SNG	VIII		42.00	158.60	191.20
Medium-Btu			30.00	120.00	180.00
LPG			-	0.10	0.20
Gasoline				64.50	129.00
Middle Distillates (Diesel)				2.50	5.00
Residues				0.70	1.40
Subtotal Products			72.00	346 00	506.00
SNG	VI		-	42.00	42.00
Medium-Btu			30.00	60.00	90.00
Subtotal Products			30.00	102.00	132 00
LPG	V			5 90	23.60
Middle Distillates				18.70	74.80
Residues				10.00	40.00
Naphtha			-	15.40	61.60
Subtotal Products				50 00	200 00
Medium-Btu	IV		30.00	90.00	180 00
Gasoline			-	-	150.00
LPG			-	-	11.80
Middle Distillates				-	37.40
Residues					20.00
Naphtha			-		30.80
Subtotal Products			30.00	90.00	430 00
SNG	III				84.00
Gasoline					300.00
LPG					5 90
Middle Distillates					18 70
Residues					10.00
Naphtha					15.40
Subtotal Products					434 00
Total U.S. Coal Conversion Products			132.00	588.00	1702.00

*Sums may not equal totals due to rounding off

Wyoming	Montana-Dakotas Utilities Colorado Interstate Gas Co. Northern Utilities, Inc., Wyoming McCulloch Interstate Gas Corp. Kansas-Nebraska Natural Gas Co. Wyoming Interstate Natural Gas System (proposed)

In general, gas flows from Montana into North Dakota; therefore plants located in North Dakota could help satisfy state-wide demand. Gas extracted in Wyoming flows into surrounding states, primarily Utah and Colorado. Gasoline and other middle-distillate products from indirect coal liquefaction will be used primarily by the transportation sector. Facilities to move the other liquefaction products are not quite as accessible as the gas pipelines. As of December 31, 1978, there was no sizeable petroleum product pipeline capacity from North Dakota to other points (Reference 30). For coal liquids that require refining, two crude pipelines move out of North Dakota, one terminating in the middle of the state and one flowing as far as Chicago. If marketable products are produced at the liquefaction site, the plants should be located close to markets or new pipelines should be brought on line. Based on 1978 consumption patterns, gasoline from liquefaction plants in Region VIII could satisfy about one fourth of the current regional consumption. Data on movements across Petroleum Administration for Defense Districts (PADD's) indicate that the Rocky Mountain area receives petroleum products via pipeline almost solely from the Mid-Continent Area (PADD-2) (Reference 31). First-quarter 1978 statistics estimate about 68,000 BPD of light petroleum products (Reference 32). According to Scenario II, indirect liquefaction plants in Wyoming may be producing 50,000 BPD of gasoline by 1992.

Should Wyoming gasoline consumption double by 1992, the coal liquefaction gasoline could still satisfy all statewide demand, as shown below.

States in EPA VIII	000BPD Gasoline Consumption (Ref. 33)[a]
Colorado	103.2
Montana	35.8
North Dakota	30.3
South Dakota	32.0
Utah	49.0
Wyoming	24.2

[a]Annual figures reduced to daily consumption (divided by 365).

Should there be sufficient production to satisfy state-wide demand, excess gasoline could be shipped to Colorado and Utah and on to other markets. Petroleum product pipelines from Wyoming are listed below:

Company	Point to Point	(000BPD)(Ref. 34)[a] Capacity
Pioneer	Sinclair, Wyoming to Salt Lake City, Utah	32
Sinclair	Sinclair, Wyoming to Denver, Colorado	14
Wyoming	Casper, Wyoming to Rapid City, South Dakota	9
	Total	55

[a]Annual figures reduced to daily consumption (divided by 365).

Although product pipelines exist in this area, the total existing capacity would be required to handle the anticipated 1992 gasoline production.

The nominal scenario projects a doubling of capacity from 1992-2000, using the same processes in North Dakota and Wyoming. In the same period, advanced indirect plants in Pennsylvania, West Virginia, and Kentucky are projected to come on line and surpass western production with 150 MBPD in each state. The primary product anticipated from the advanced indirect liquefaction facilities is gasoline. The 1978 gasoline consumption figures for EPA regions II and III are:

EPA Region	State	(000BPD)(Ref. 33)
II	New Jersey	22
	New York	403
III	Delaware	20
	District of Columbia	14
	Maryland	133
	Pennsylvania	393
	Virginia	186
	West Virginia	59

Data on cross-PAD district movements indicate that more gasoline flows into PAD district I (Eastern Seaboard) than flows out. Figures for November 1979 put gasoline inflow at 1,117 MBPD and outflow at 151 MBPD (Reference 30). Should gasoline consumption remain the same, the projected gasoline from coal liquids of 450 MBPD by 2000 could displace one-third of the gasoline demand. While the largest product pipeline in the nation moves products from the Gulf coast to the population and industrial centers of the east, it completely bypasses Kentucky and West Virginia. In fact, these two states, projected to be prime coal liquids producers, have no major product pipeline and only limited crude facilities. Pennsylvania, another projected producer, has a number of pipelines running through it but all are in an east-west orientation. Besides displacing gasoline moved into the region by pipeline, the liquefaction products could displace water-shipped gasoline. From November 1979 statistics, it appears that

gasoline constitutes about 50 percent of the petroleum products moved over water. Eastern indirect coal liquefaction (450,000 BPD) could displace much of that shipped via tanker and barge.

By 1993-2000, pipelines may be built to transport gasoline from liquefaction plants to consuming centers such as Pittsburgh. From Pittsburgh, final products could be incorporated into the existing network and moved farther east to the industrial areas of New York and New Jersey. Liquefaction plants in Pennsylvania have relatively easier access to refineries and product pipelines. Should refining be required, refineries operate in the Lake Erie area and the Philadelphia area, although excess capacity is questionable. Products could be incorporated into the movement via the Great Lakes to consumers from Erie or via pipeline from Philadelphia to eastern consumers.

From existing storage capacity and inventory data for crude oil and petroleum products, as well as from plans for new construction of storage capacity, it appears that in the areas projected for coal liquefaction plants there should not be any problem storing liquefaction products.

3.3.3.2 Direct Coal Liquefaction Products--

The nominal scenario projects direct liquefaction facilities primarily in the Illinois, Kentucky, and West Virginia region. A product slate consisting of naphtha, middle distillate, residual fuel oil, and LPG is anticipated. Should the coal liquids from the plants require refining, sufficient crude pipelines move through Illinois to refineries in northern Illinois. If the light products from the direct process are available at the point of liquefaction, numerous product pipelines also move through Illinois to the north (Chicago) and east (Ohio and Pennsylvania). These pipelines (Reference 34) are listed below:

Type	Company	Point to Point	Capacity (000BPD)
Crude	Explorer	Wood River, Ill. to Chicago, Ill.	290
Crude	Marathon	Wood River, Ill. to Bluff City. Ill.	315
Crude	Texas Cities Service	Bluff City, Ill. to Chicago, Ill.	161
Crude	Chicap	Bluff City, Ill. to Chicago, Ill.	490
Crude	Marathon	Bluff City, Ill. to Lima, Ohio	315
Crude	Sohio	Bluff City, Ill. to Lima, Ohio	26
Product	Explorer, Phillips	Wood River Ill. to Chicago, Ill.	327
Product	Marathon	Wood River, Ill. to Chicago, Ill.	90
Product	Marathon, Buckeye	Wood River, Ill. to Chicago, Ill.	48
Product	Sun	Akron, Ohio to Pittsburgh, Pa.	45
Product	Ashland	Canton, Ohio to Pittsburgh, Pa.	30

Although pipelines exist in this area, they carry mainly petroleum crude and products from the Gulf Coast area. Pipeline availability and refinery capacity are questionable.

LPG will most likely follow the same general pattern and be pipelined and trucked to northern industrial areas. Likely pipelines are:

Company	Point to Point	Size (Diameter In Inches)
Texas Eastern	Cape Girardeau, Mo. to Marcus Hook, NJ	20 to 6
Phillips	St. Louis, Mo. to Chicago, Ill.	8

Heavy products not suited to pipeline transportation will most likely take advantage of the extensive rail system that stretches through Illinois, Indiana, Ohio, and Pennsylvania. Tank trucks will also move large volumes.

Indications are that direct coal liquefaction products will be absorbed into the current distribution network and help satisfy local demand or move to markets currently being served by product pipelines the Chicago area and industrial east.

Indications are that residual products of direct coal conversion will be used primarily in the utility sector as boiler fuel. Initially, distillates may be used for residential and commerical heating. Naphtha may be used as a chemical feedstock material. LPG will find application both as a chemical feedstock and as a heating fuel. Attempts will be made during 1993-2000 to use distillates from direct liquefaction as turbine fuel. Efforts to refine them for use in the transportation sector cannot be ruled out. If this effort is successful, DOD could become a major customer of direct liquefaction products with coal plants built in Appalachia supplying Andrews Air Force Base in Maryland (Reference 35).

3.3.4 Petrochemical Feedstocks and Other By-Products

During 1980-1987, the feedstocks for petrochemicals and other by-products will have to come from medium-Btu gas production. As shown in Table 21, naphtha or LPG production in this time period per Scenario II is negligible. The total quantity of medium-Btu gas produced is 0.09 MMBPD in Regions IV, VI, and VIII. Considering the utilization patterns shown in Tables D-15 and D-16, about 50 to 75 percent of the medium-Btu gas produced in Region VI will be consumed by the petrochemical industry as feedstocks. The medium-Btu gas produced in Regions VIII and IV will likely be for captive use by other industries, unless some petrochemical industries are built in these regions. It is possible that some of this medium-Btu gas

TABLE 21. COMPARISON OF PETROCHEMICAL FEEDSTOCKS AND OTHER BY-PRODUCTS PRODUCED TO MEET THE GOALS OF SCENARIO II VS. SCENARIO I AND SCENARIO III

Sources	Region	Scenario II Feedstocks (10^3BPD) 1980-87	1988-92	1993-2000	Scenario I Feedstocks (10^3BPD) 1980-87	1988-92	1993-2000	Scenario III Feedstocks (10^3BPD) 1980-87	1988-92	1993-2000
Product of Direct Liquefaction										
Naphtha	III	-	-	15.40	-	6.60	6.60	-	6.60	13.20
	IV	-	-	30.80	-	-	-	-	-	-
	V	-	15.40	61.60	-	33.70	33.70	-	33.70	67.40
Total		-	15.40	107.80	-	40.30	40.30	-	40.30	80.60
Medium-Btu Gasification										
Synthesis	IV	30.00	90.00	180.00	-	-	-	-	-	-
	V	-	-	-	30.00	90.00	90.00	30.00	90.00	210.00
	VI	30.00	60.00	90.00	-	-	-	-	-	120.00
	VII	30.00	120.00	180.00	150.00	210.00	210.00	150.00	210.00	210.00
Total		90.00	270.00	450.00	180.00	300.00	300.00	180.00	300.00	540.00
Product of Indirect/ Direct Liquefaction										
LPG	III	-	-	5.90	-	9.90	9.90	-	9.90	19.80
	IV	-	-	11.80	-	-	-	-	-	-
	V	-	5.90	23.60	-	12.40	12.40	-	12.40	24.80
	VIII	-	0.10	0.20	0.40	0.90	0.90	0.40	0.90	0.90
Total		-	6.00	41.50	0.40	23.20	23.20	0.40	23.20	45.50

produced in Regions IV and VIII could be used to manufacture ammonia and methanol, which could eventually be used by the petrochemical industry to manufacture other petrochemicals and by-products.

In comparing the product build-up rates of Scenario II with Scenarios I and III, Table 21 shows that Scenarios I and III produce 0.09 MMBPD more medium-Btu gas than Scenario II. This increase in feedstock production by Scenarios I and III would provide for additional feedstock utilization in Regions V and VIII for the manufacture of ammonia and methanol. The products could be eventually used to manufacture other petrochemicals and by-products to be used in those regions.

During 1988-1992, all three primary sources of feedstocks will be produced and will be more widely dispersed throughout the U.S. The major difference between this time period and the earlier one is that naphtha and LPG will be produced. Naphtha is produced as a product of direct liquefaction in Region V. LPG is produced in Regions V and VIII. Medium-Btu gas is still produced in Regions IV, VI, and VIII, the difference being an increase in quantities over the last time period. The total quantities of feedstocks produced, as shown in Table 21, are: naphtha-15,400 BPD; medium-Btu gas 270,000 BPD; and LPG 6,000 BPD. The utilization of these feedstocks is expected to parallel to some extent the current regional consumption patterns shown in Tables D-15 and D-16. However, because only a small amount of naphtha is produced, it is expected that it will be used totally in Region V as a feedstock for other petrochemicals and by-products or as feedstocks for other industrial use, for example, gasoline production. The medium-Btu gas produced in Regions IV, VI, and VIII is expected to be used for the same purposes discussed earlier in the 1980-1987 period. About 24 percent of the LPG produced in Regions V and VIII can be used by petrochemical industries in Regions V and VI for manufacturing petrochemicals and other by-products. The remaining 76 percent of LPG will likely be used for other industrial applications as discussed in Section 3.2.1.

The 1993-2000 period will have the same types of feedstock production as discussed for 1988-1992. The difference is that the expected quantities of feedstocks increase significantly because of the increase in the number of plants in operation by this time. Table 21 shows that naphtha production in Region V increases four times, and medium-Btu gas production in Region IV, doubles while Regions VI and VIII increase by one and one-half times. LPG production in Regions V and VIII increases by four and by one and one-half, respectively. In addition, about 15,400 BPD and 30,800 BPD of naptha is produced in Regions III and IV. Also, about 5,900 BPD and 11,800 BPD of LPG is produced in Regions III and IV. The utilization pattern of these feedstocks is expected to continue as discussed earlier for the 1988-1993 period. The only exception may be that because the naphtha and LPG production are increased four times and they are also produced in Regions III and IV, some of these feedstocks are likely to be transported to Region VI. If these feedstocks are transported, the likely mode will be by rail, and truck.

3.3.5 Summary of Synfuel Product Utilization by Region

For the three production time periods identified for Scenario II, the regional utilization of major synfuel products (SNG, LPG, gasoline, middle distillates, and heavy distillates) are summarized in Tables 22, 25, and 31. In addition, detailed tables supporting each summary table show the likely utilization by region and by consuming sector. The quantities shown by consuming sector, using quantities utilized by region, are allocated on a percentage basis consistent with current consumption patterns. Figures 14 through 16 show the quantities and transport patterns of synfuel products within and outside of the production regions. In addition, the tables present the current regional utilization patterns as well as the likely utilization patterns expected for synfuel products.

Table 22 and Figure 14 show that during 1980-87 all products produced from shale oil will be consumed in Region VIII. The major consuming sectors of these products are shown in Table 23. During the same time period, the SNG produced in Region VIII will be pipelined to Region V industrial centers for utilization. Table 24 shows a breakdown by consuming sectors for SNG.

As shown in Table 23, shale oil products in Region VIII could displace about 16 percent of the regional gasoline, middle distillates, and residual demand, while at the same time displacing about 9 percent of the region's total energy needs. Table 24 shows that the SNG (from Region VIII) could displace about 2 percent of Region V's natural gas demand and about 1 percent of the region's total energy needs during this time period.

Table 25 and Figure 15 show a shift in the utilization of shale oil during 1988-1992. About 50 percent of these products will be pipelined to Region V, while about 5 percent of the remaining shale oil products marketed in Region VIII will be pipelined to Region X for utilization at Mountain Home Air Force Base in Idaho. Another 5 percent of the remaining quantity will be utilized at Hill Air Force Base in Utah (refer to Tables 26 through 28 for consumption by major consuming sectors). Coal-derived liquids and LPG will be consumed in the respective production regions. SNG produced in Region VI will be pipelined to Region IX for consumption (refer to Table 29). The SNG produced in Region VIII will be consumed in that region (about 50 percent) and the remaining SNG will be pipelined equally to Regions V and VII (refer to Tables 26, 27, and 30). Of the expected regional synfuel products' utilization patterns presented in Table 25, it is shown that about 97 percent of Region VIII's middle distillate demand will be provided by synfuel products, the split being 2 percent from indirect coal liquids and 95 percent from shale oil.

The percentage of synfuel market penetration for this time period compared to the last time period shows that SNG utilization in Region V will be consistent. However, shale oil in Region VIII will almost triple in both cases over the 1980-1987 time period. In addition, indirect coal liquids and SNG will supply about 0.068 MMBPD and 0.075 MMBPD (0.0326 MMBPD from indirect coal liquids) respectively of the demand for these products

TABLE 22. LIKELY UTILIZATION PATTERNS OF MAJOR SYNFUEL PRODUCTS BY REGIONS SCENARIO II, 1980-1987 TIME PERIOD (IN MMBPD)

PRODUCTS	EPA REGION I	II	III	IV	V	VI	VII	VIII	IX	X	TOTAL U.S.
NATURAL GAS											
Current Consumption	0.1266	0.3834	0.5507	0.7877	1.9381	3.6962	0.6170	0.2995	0.8697	0.1939	9.463
Synfuels Contribution	-	-	-	-	0.0420	-	-	-	-	-	0.042
LPG											
Current Consumption	0.0489	0.0471	0.0702	0.2505	0.3611	0.2511	0.2070	0.0739	0.0794	0.0205	1.410
Synfuels Contribution	-	-	-	-	-	-	-	-	-	-	-
GASOLINE											
Current Consumption	0.3592	0.6190	0.7957	1.3432	1.5265	0.9523	0.4528	0.2708	0.9698	0.2726	7.562
Synfuels Contribution	-	-	-	-	-	-	-	0.0131	-	-	0.013
MIDDLE DISTILLATES											
Current Consumption	0.3613	0.6076	0.4757	0.6659	0.8819	0.5729	0.2193	0.1516	0.4912	0.2226	4.650
Synfuels Contribution	-	-	-	-	-	-	-	0.0570	-	-	0.057
RESIDUALS											
Current Consumption	0.3628	0.6016	0.4130	0.5022	0.3005	0.4032	0.0447	0.0414	0.4590	0.0636	3.192
Synfuels Contribution	-	-	-	-	-	-	-	0.0069	-	-	0.007
TOTAL											
Current Consumption	1.2588	2.2587	2.3053	3.5495	5.0081	5.8757	1.5408	0.8372	2.8691	0.7732	26.277
Synfuels Contribution	-	-	-	-	0.0420	-	-	0.0770	-	-	0.119

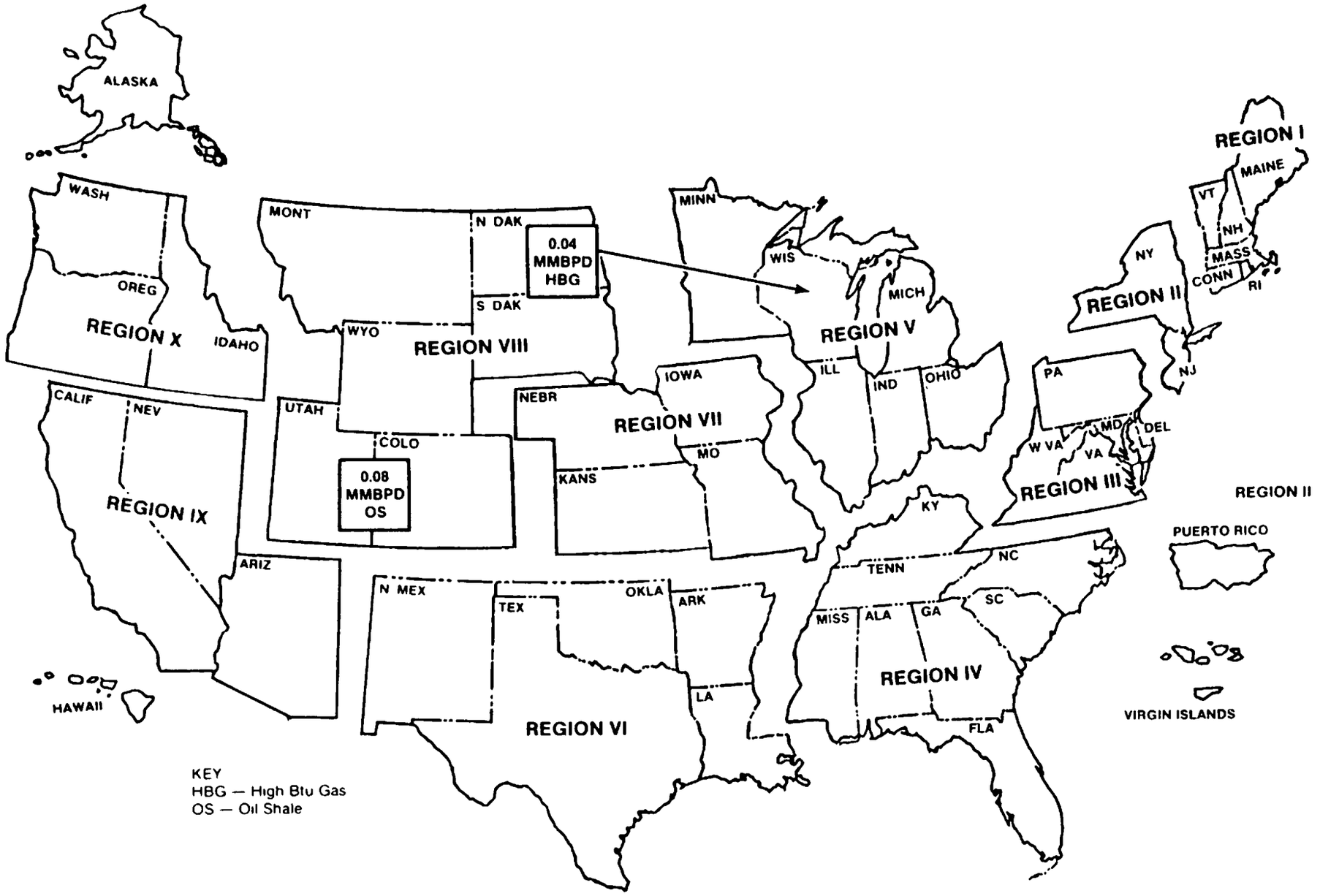

Figure 14. Synfuel Production and Utilization Regions - Scenario II 1980-1987

TABLE 23. LIKELY UTILIZATION PATTERNS OF MAJOR SYNFUEL PRODUCTS BY REGIONS AND BY SECTORS--SCENARIO II--1980-1987 TIME PERIOD REGION VIII (IN MMBPD)

Product	SECTOR					
	Residential	Commercial	Industrial	Transport-ation	Electric Utilities	Total
Natural Gas						
Current Consumption	0.0984	0.0633	0.1121	0.0071	0.0186	0.2995
High-Btu Gasification						
Indirect Liquefaction						
LPG						
Current Consumption	0.0515	0.0057	0.0162	0.0005		0.0739
Indirect Liquefaction						
Direct Liquefaction						
Gasoline						
Current Consumption		0.0018	0.0145	0.2545		0.2708
Indirect Liquefaction		-	-	-		-
Oil Shale		0.0001	0.0007	0.0123		0.0131
Middle Distillates[a]						
Current Consumption	0.0185	0.0165	0.0238	0.0907	0.0021	0.1516
Indirect Liquefaction						
Direct Liquefaction	-	-	-	-	-	-
Oil Shale	0.0070	0.0062	0.0089	0.0341	0.0008	0.0570
Residuals						
Current Consumption		0.0135	0.0222	0.0043	0.0014	0.0414
Indirect Liquefaction						
Direct Liquefaction		-	-	-	-	-
Oil Shale		0.0023	0.0037	0.0007	0.0002	0.0069
Total						
Current Consumption	0.1684	0.1008	0.1888	0.3571	0.0221	0.8372
High-Btu Gasification						
Indirect Liquefaction						
Direct Liquefaction	-	-	-	-	-	-
Oil Shale	0.0070	0.0086	0.0133	0.0471	0.0010	0.077

[a]Includes distillate fuel oil, jet fuel, and kerosene

TABLE 24. LIKELY UTILIZATION PATTERNS OF MAJOR SYNFUEL PRODUCTS BY REGIONS AND BY SECTORS--SCENARIO II--1980-1987 TIME PERIOD REGION V (IN MMBPD)

Product	SECTOR					
	Residential	Commercial	Industrial	Transport-ation	Electric Utilities	Total
Natural Gas						
Current Consumption	0.8052	0.3841	0.6953	0.0173	0.0362	1.9381
High-Btu Gasification	0.0174	0.0083	0.0151	0.0004	0.0008	0.0420
Indirect Liquefaction						
LPG						
Current Consumption	0.1924	0.0214	0.1448	0.0025		0.3611
Indirect Liquefaction						
Direct Liquefaction						
Gasoline						
Current Consumption		0.0097	0.0306	1.4862		1.5265
Indirect Liquefaction						
Oil Shale						
Middle Distillates[a]						
Current Consumption	0.2685	0.1122	0.0874	0.3534	0.0604	0.8819
Indirect Liquefaction						
Direct Liquefaction						
Oil Shale						
Residuals						
Current Consumption		0.0636	0.1229	0.0236	0.0904	0.3005
Indirect Liquefaction						
Direct Liquefaction						
Oil Shale						
Total						
Current Consumption	1.2661	0.5910	1.0810	1.8830	0.1870	5.0081
High-Btu Gasification	0.0174	0.0083	0.0151	0.0004	0.0008	0.0420
Indirect Liquefaction						
Direct Liquefaction						
Oil Shale						

[a]Includes distillate fuel oil, jet fuel, and kerosene

TABLE 25. LIKELY UTILIZATION PATTERNS OF MAJOR SYNFUEL PRODUCTS BY EPA REGIONS
SCENARIO II -- 1988-1992 TIME PERIOD (IN MMBPD)

PRODUCTS	EPA REGION I	II	III	IV	V	VI	VII	VIII	IX	X	TOTAL U.S.
NATURAL GAS											
Current Consumption	0.1266	0.3834	0.5507	0.7877	1.9381	3.6962	0.6170	0.2995	0.8697	0.1939	9.463
Synfuels Contribution	-	-	-	-	0.0420	-	0.0420	0.0746	0.0420	-	0.201
LPG											
Current Consumption	0.0489	0.0471	0.0702	0.2505	0.3611	0.2511	0.2070	0.0739	0.0794	0.0205	1.410
Synfuels Contribution	-	-	-	-	0.0059	-	-	0.0001	-	-	0.006
GASOLINE											
Current Consumption	0.3592	0.6190	0.7957	1.3432	1.5265	0.9523	0.4528	0.2708	0.9698	0.2726	7.562
Synfuels Contribution	-	-	-	-	0.0349	-	-	0.0977	-	0.0017	0.134
MIDDLE DISTILLATES											
Current Consumption	0.3613	0.6076	0.4757	0.6659	0.8819	0.5729	0.2193	0.1516	0.4912	0.2226	4.650
Synfuels Contribution	-	-	-	-	0.1704	-	-	0.1466	-	0.0076	0.325
RESIDUALS											
Current Consumption	0.3628	0.6016	0.4130	0.5022	0.3005	0.4032	0.0447	0.0414	0.4590	0.0636	3.192
Synfuels Contribution	-	-	-	-	0.0285	-	-	0.0183	-	0.0009	0.048
TOTAL											
Current Consumption	1.2588	2.2587	2.3053	3.5495	5.0081	5.8757	1.5408	0.8372	2.8691	0.7732	26.277
Synfuels Contribution	-	-	-	-	0.2817	-	0.0420	0.3373	0.0420	0.0102	0.714

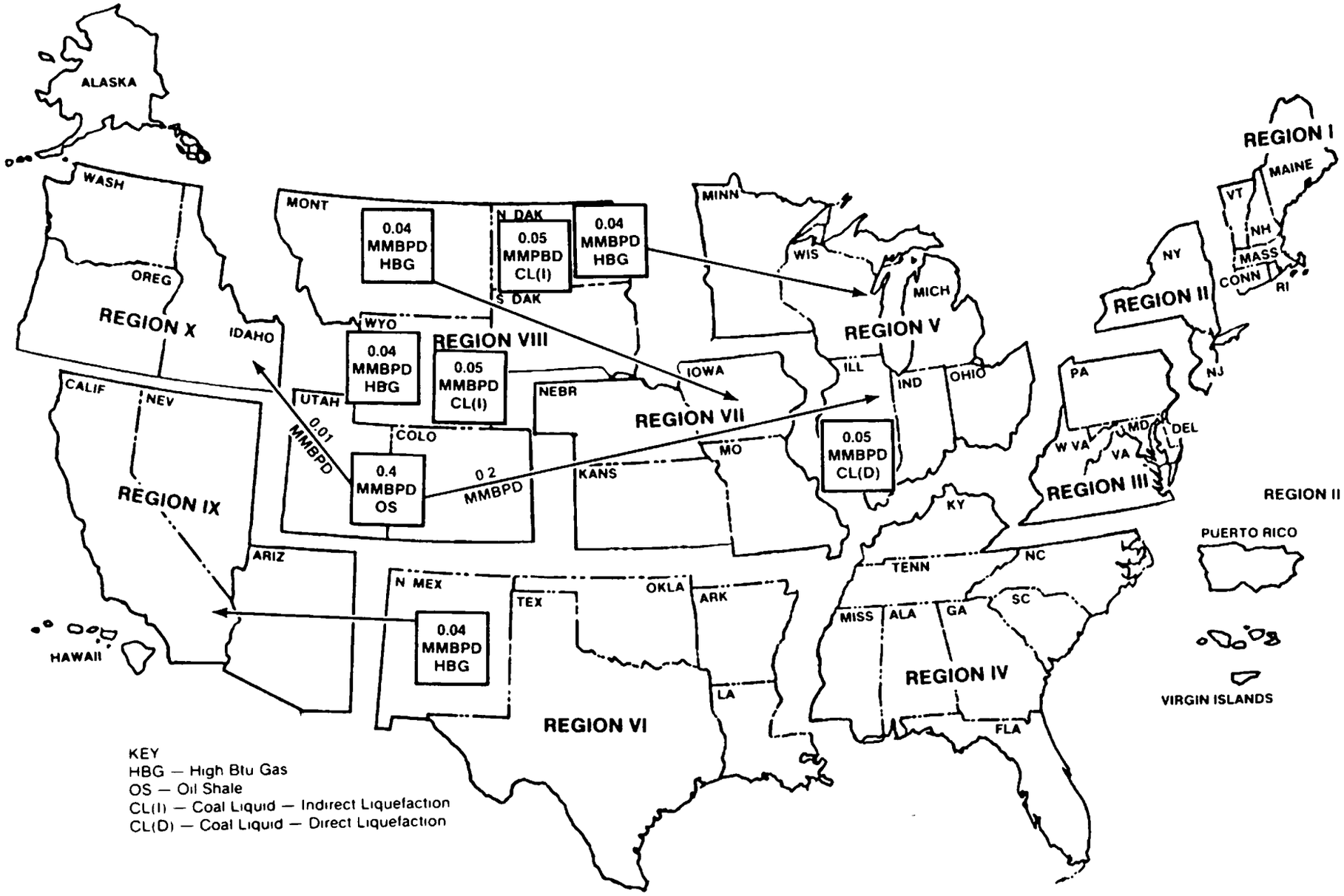

Figure 15. Synfuel Production and Utilization Regions Scenario II - 1988-1992

TABLE 26. LIKELY UTILIZATION PATTERNS OF MAJOR SYNFUEL PRODUCTS BY REGIONS AND BY SECTORS--SCENARIO II--1988-1992 TIME PERIOD, REGION V (IN MMBPD)

Product	SECTOR					
	Residential	Commercial	Industrial	Transport-ation	Electric Utilities	Total
Natural Gas						
Current Consumption	0.8052	0.3841	0.6953	0.0173	0.0362	1.9381
High-Btu Gasification	0.0174	0.0083	0.0151	0.0004	0.0008	0.0420
Indirect Liquefaction						
LPG						
Current Consumption	0.1924	0.0214	0.1448	0.0025		0.3611
Indirect Liquefaction	-	-		-		
Direct Liquefaction	0.0031	0.0003	0.0024	0.0001		0.0059
Gasoline						
Current Consumption		0.0097	0.0306	1.4862		1.5265
Indirect Liquefaction		-	-	-		-
Oil Shale		0.0002	0.0007	0.0340		0.0349
Middle Distillates[a]						
Current Consumption	0.2685	0.1122	0.0874	0.3534	0.0604	0.8819
Indirect Liquefaction	-	-	-	-	-	-
Direct Liquefaction	0.0057	0.0024	0.0018	0.0075	0.0013	0.0187
Oil Shale	0.0461	0.0193	0.0150	0.0608	0.0105	0.1517
Residuals						
Current Consumption		0.0636	0.1229	0.0236	0.0904	0.3005
Indirect Liquefaction		-	-	-	-	-
Direct Liquefaction		0.0021	0.0041	0.0008	0.0030	0.0100
Oil Shale		0.0039	0.0076	0.0015	0.0055	0.0185
Total						
Current Consumption	1.2661	0.5910	1.0810	1.8830	0.1870	5.0081
High-Btu Gasification	0.0174	0.0083	0.0151	0.0004	0.0008	0.0420
Indirect Liquefaction	-	-	-	-	-	-
Direct Liquefaction	0.0088	0.0048	0.0083	0.0084	0.0043	0.0346
Oil Shale	0.0461	0.0234	0.0233	0.0963	0.0160	0.2051

[a]Includes distillate fuel oil, jet fuel, and kerosene

TABLE 27. LIKELY UTILIZATION PATTERNS OF MAJOR SYNFUEL PRODUCTS BY REGIONS AND BY SECTORS--SCENARIO II--1988-1992 TIME PERIOD, REGION VIII (IN MMBPD)

Product	SECTOR					
	Residential	Commercial	Industrial	Transport-ation	Electric Utilities	Total
Natural Gas						
Current Consumption	0.0984	0.0633	0.1121	0.0071	0.0186	0.2995
High-Btu Gasification	0.0138	0.0089	0.0157	0.0010	0.0026	0.0420
Indirect Liquefaction	0.0107	0.0069	0.0122	0.0008	0.0020	0.0326
LPG						
Current Consumption	0.0515	0.0057	0.0162	0.0005		0.0739
Indirect Liquefaction	0.00007	0.00001	0.00002	0.0000		0.0001
Direct Liquefaction						
Gasoline						
Current Consumption		0.0018	0.0145	0.2545		0.2708
Indirect Liquefaction		0.0005	0.0035	0.0605		0.0645
Oil Shale		0.0002	0.0018	0.0312		0.0332
Middle Distillates[a]						
Current Consumption	0.0185	0.0165	0.0238	0.0907	0.0021	0.1516
Indirect Liquefaction	0.0003	0.00027	0.0004	0.0015	0.00003	0.0025
Direct Liquefaction	-	-	-	-	-	-
Oil Shale	0.0176	0.0157	0.0226	0.0862	0.0020	0.1441
Residuals						
Current Consumption		0.0135	0.0222	0.0043	0.0014	0.0414
Indirect Liquefaction		0.0002	0.0004	0.00008	0.00002	0.0007
Direct Liquefaction				-	-	-
Oil Shale		0.0058	0.0094	0.0018	0.0006	0.0176
Total						
Current Consumption	0.1684	0.1008	0.1888	0.3571	0.0221	0.8372
High-Btu Gasification	0.0245	0.0158	0.0279	0.0018	0.0046	0.0746
Indirect Liquefaction	0.00037	0.00098	0.00432	0.06208	0.00005	0.0678
Direct Liquefaction	-	-	-	-	-	-
Oil Shale	0.0176	0.0217	0.0338	0.1192	0.0026	0.1949

[a]Includes distillate fuel oil, jet fuel, and kerosene

TABLE 28. LIKELY UTILIZATION PATTERNS OF MAJOR SYNFUEL PRODUCTS BY REGIONS AND BY SECTORS--SCENARIO II--1988-1992 TIME PERIOD REGION X (IN MMBPD)

Product	SECTOR					
	Residential	Commercial	Industrial	Transport-ation	Electric Utilities	Total
Natural Gas						
Current Consumption	0.0312	0.0279	0.1134	0.0096	0.0118	0.1939
High-Btu Gasification						
Indirect Liquefaction						
LPG						
Current Consumption	0.0094	0.0010	0.0098	0.0003		0.0205
Indirect Liquefaction						
Direct Liquefaction						
Gasoline						
Current Consumption		0.0029	0.0040	0.2657		0.2726
Indirect Liquefaction		-	-	-		
Oil Shale		0.00002	0.00002	0.00166		0.0017
Middle Distillates[a]						
Current Consumption	0.0278	0.0269	0.0374	0.1278	0.0027	0.2226
Indirect Liquefaction						
Direct Liquefaction	-	-	-	-	-	-
Oil Shale	0.0010	0.0010	0.0012	0.0043	0.0001	0.0760
Residuals						
Current Consumption		0.0096	0.0245	0.0295		0.0636
Indirect Liquefaction			-			
Direct Liquefaction		-	-	-	-	-
Oil Shale		0.0001	0.0003	0.0005		0.0009
Total						
Current Consumption	0.0684	0.0683	0.1891	0.4329	0.0145	0.7732
High-Btu Gasification						
Indirect Liquefaction						
Direct Liquefaction	-	-	-	-	-	-
Oil Shale	0.0010	0.00112	0.00152	0.00646	0.0001	0.0102

[a]Includes distillate fuel oil, jet fuel, and kerosene

TABLE 29. LIKELY UTILIZATION PATTERNS OF MAJOR SYNFUEL PRODUCTS BY REGIONS AND BY SECTORS--SCENARIO II--1988-1992 TIME PERIOD REGION IX (IN MMBPD)

Product	SECTOR					
	Residential	Commercial	Industrial	Transport-ation	Electric Utilities	Total
Natural Gas						
Current Consumption	0.2795	0.1307	0.2625	0.0145	0.1825	0.8697
High-Btu Gasification	0.0135	0.0063	0.0127	0.0007	0.0088	0.0420
Indirect Liquefaction						
LPG						
Current Consumption	0.0283	0.0032	0.0469	0.0010		0.0794
Indirect Liquefaction						
Direct Liquefaction						
Gasoline						
Current Consumption		0.0097	0.0040	0.9561		0.9698
Indirect Liquefaction						
Oil Shale						
Middle Distillates[a]						
Current Consumption	0.0108	0.0104	0.0599	0.3983	0.0118	0.4912
Indirect Liquefaction						
Direct Liquefaction						
Oil Shale						
Residuals						
Current Consumption		0.0076	0.0393	0.1582	0.2539	0.4590
Indirect Liquefaction						
Direct Liquefaction						
Oil Shale						
Total						
Current Consumption	0.3186	0.1616	0.4126	1.5281	0.4482	2.8691
High-Btu Gasification	0.0135	0.0063	0.0127	0.0007	0.0088	0.0420
Indirect Liquefaction						
Direct Liquefaction						
Oil Shale						

[a]Includes distillate fuel oil, jet fuel, and kerosene

TABLE 30. LIKELY UTILIZATION PATTERNS OF MAJOR SYNFUEL PRODUCTS BY REGIONS AND BY SECTORS--SCENARIO II--1988-1992 TIME PERIOD REGION VII (IN MMBPD)

Product	SECTOR					
	Residential	Commercial	Industrial	Transport-ation	Electric Utilities	Total
Natural Gas						
Current Consumption	0.1868	0.1222	0.1885	0.0392	0.0803	0.6170
High-Btu Gasification	0.0127	0.0083	0.0129	0.0026	0.0055	0.0420
Indirect Liquefaction						
LPG						
Current Consumption	0.1212	0.0135	0.0711	0.0012		0.2070
Indirect Liquefaction						
Direct Liquefaction						
Gasoline						
Current Consumption		0.0050	0.0202	0.4276		0.4528
Indirect Liquefaction		-				
Oil Shale						
Middle Distillates[a]						
Current Consumption	0.0315	0.0203	0.0311	0.1251	0.0113	0.2193
Indirect Liquefaction						
Direct Liquefaction						
Oil Shale						
Residuals						
Current Consumption		0.0077	0.0150	0.0072	0.0148	0.0447
Indirect Liquefaction						
Direct Liquefaction						
Oil Shale						
Total						
Current Consumption	0.3395	0.1687	0.3259	0.6003	0.1064	1.5408
High-Btu Gasification	0.0127	0.0083	0.0129	0.0026	0.0055	0.0420
Indirect Liquefaction			-			
Direct Liquefaction						
Oil Shale						

[a]Includes distillate fuel oil, jet fuel, and kerosene

in Region VIII as shown in Table 27. In Region V, direct coal liquids and shale oil products (50 percent from Region VIII) will add about 0.035 MMBPD and 0.2 MMBPD (Table 26). Region X will receive 0.01 MMBPD of transportation and heavy distillate products from Region VIII, which in turn will satisfy about 2 percent of its gasoline, middle distillate, and residual demand. About 1.3 percent of this region's total energy demand will be met by synfuels (Table 28). Also during this period, 0.042 MMBPD of SNG will be utilized in Regions IX and VII from production Regions VI and VIII, respectively. This quantity of SNG will satisfy about 5 and 7 percent of the regions' SNG demand and about 1.5 and 3 percent of their total energy demand, respectively (Tables 29 and 30).

During 1993-2000, the utilization patterns are expected to remain the same as in the last period. The differences will be an increase in the quantities of synfuel products, along with the addition of products produced in other regions. At this time, coal-derived liquids, SNG, and LPG (Table 31) will be produced and utilized in Regions III and IV. The major consuming sectors of these products are shown in Tables 32 and 33. It is expected that about 24 percent of the LPG produced in Regions III, IV, and V may be transported to Region VI for use by the petrochemical industry (Tables 34 and 35). The small quantity produced in Region VIII is expected to be consumed there, as shown in Table 36.

Compared to 1988-1992, synfuel market penetration during this time period is likely to be identical for SNG utilization in Regions V, VII, and IX. In addition, SNG production and utilization in Regions III and VIII will add 0.084 MMBPD and an additional 0.0326 MMBPD more products to the regions' SNG demand (Tables 32 and 36). The additional increase in SNG in Region VIII will result from a doubling of indirect coal liquefaction capacity. Region IV will add some 0.15 MMBPD of gasoline products from indirect coal liquefaction and 0.066 MMBPD of products to displace LPG, middle distillates, and residuals during this time (Table 33). The other major differences in synfuels utilization by region and by sector for this time period will be an increase in products produced; LPG consumption in Region VI (refer to Table 35); and transportation of about 0.005 MMBPD of coal-derived middle distillates to Region V for consumption because of the excess capacity produced in Region VIII.

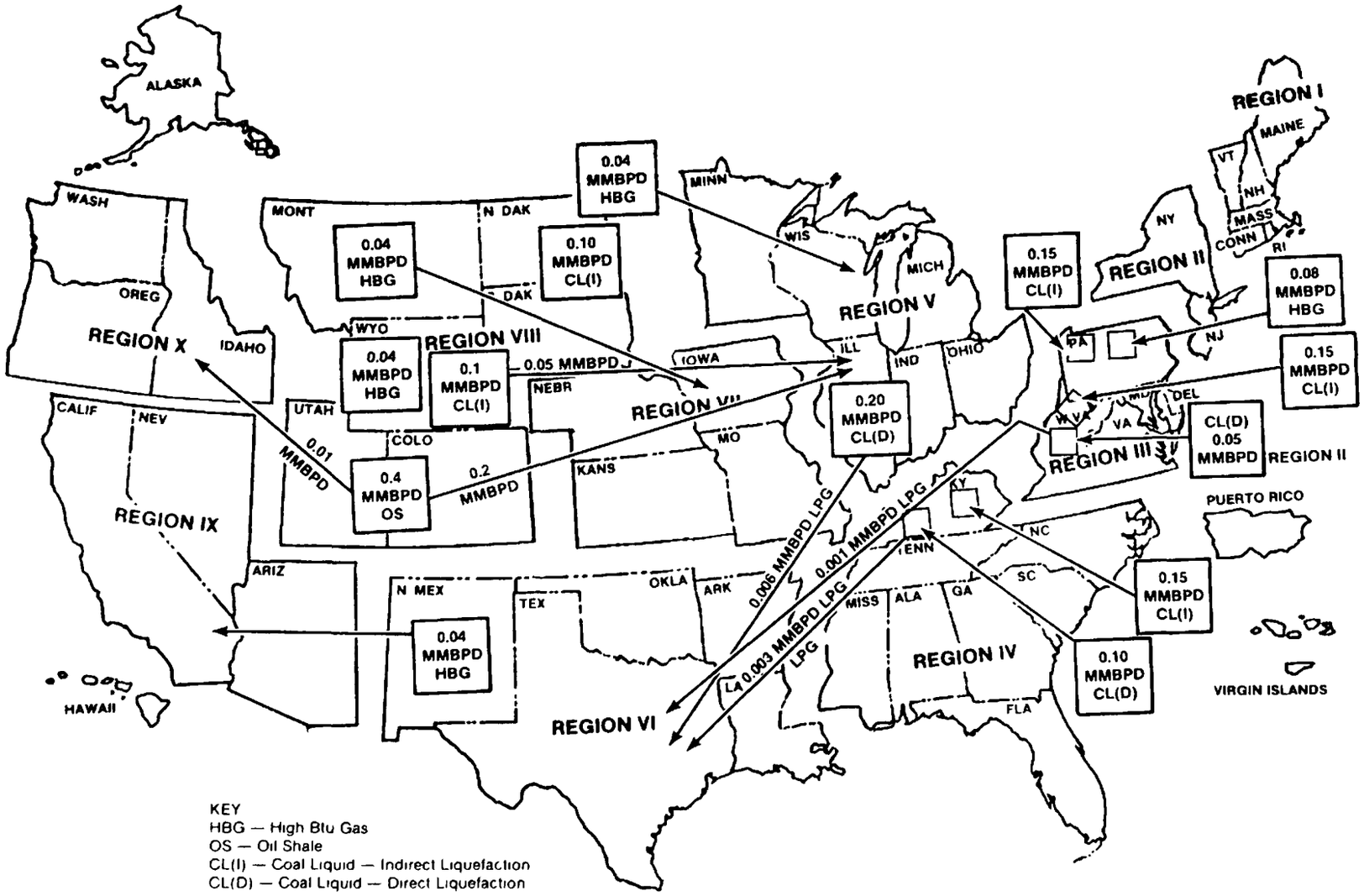

Figure 16. Synfuel Production and Utilization Regions Scenario II - 1993-2000

TABLE 31. LIKELY UTILIZATION PATTERNS OF MAJOR SYNFUEL PROJECTS BY EPA REGIONS
SCENARIO II -- 1993-2000 TIME PERIOD (IN MMBPD)

PRODUCTS	EPA REGION I	II	III	IV	V	VI	VII	VIII	IX	X	TOTAL U.S.
NATURAL GAS											
Current Consumption	0.1266	0.3834	0.5507	0.7877	1.9381	3.6962	0.6170	0.2995	0.8697	0.1939	9.463
Synfuels Contribution	-	-	0.0840	-	0.0420	-	0.0420	0.1072	0.0420	-	0.317
LPG											
Current Consumption	0.0489	0.0471	0.0702	0.2505	0.3611	0.2511	0.2070	0.0739	0.0794	0.0205	1.410
Synfuels Contribution	-	-	0.0045	0.0090	0.0202	0.0106	-	0.0002	-	-	0.0445
GASOLINE											
Current Consumption	0.3592	0.6190	0.7957	1.3432	1.5265	0.9523	0.4528	0.2708	0.9698	0.2726	7.562
Synfuels Contribution	-	-	0.3000	0.1500	0.0366	-	-	0.1638	-	0.0018	0.652
MIDDLE DISTILLATES											
Current Consumption	0.3613	0.6076	0.4757	0.6659	0.8819	0.5729	0.2193	0.1516	0.4912	0.2226	4.650
Synfuels Contribution	-	-	0.0187	0.0374	0.2389	-	-	0.1511	-	0.0080	0.454
RESIDUALS											
Current Consumption	0.3628	0.6016	0.4130	0.5022	0.3005	0.4032	0.0447	0.0414	0.4590	0.0636	3.192
Synfuels Contribution	-	-	0.0100	0.0200	0.0594	-	-	0.0198	-	0.0010	0.110
TOTAL											
Current Consumption	1.2588	2.2587	2.3053	3.5495	5.0081	5.8757	1.5408	0.8372	2.2691	0.7732	26.277
Synfuels Contribution	-	-	0.4172	0.2164	0.3971	0.0106	0.0420	0.4421	0.0420	0.0108	1.578

TABLE 32. LIKELY UTILIZATION PATTERNS OF MAJOR SYNFUEL PRODUCTS BY REGIONS AND BY SECTORS--SCENARIO II--1993-2000 TIME PERIOD, REGION III (MMBPD)

Product	SECTOR					
	Residential	Commercial	Industrial	Transport-ation	Electric Utilities	Total
Natural Gas						
Current Consumption	0.2337	0.1055	0.1885	0.0214	0.0016	0.5507
High-Btu Gasification	0.0356	0.0161	0.0287	0.0033	0.0003	0.0840
Indirect Liquefaction						
LPG						
Current Consumption	0.0305	0.0034	0.0356	0.0007		0.0702
Indirect Liquefaction	-	-	-		-	-
Direct Liquefaction	0.0020	0.0002	0.00225	0.00005		0.0045
Gasoline						
Current Consumption		0.0064	0.0033	0.7860		0.7957
Indirect Liquefaction		0.0024	0.0012	0.2964		0.3000
Oil Shale						
Middle Distillates[a]						
Current Consumption	0.1383	0.0597	0.0586	0.1839	0.0352	0.4757
Indirect Liquefaction	-	-	-	-	-	-
Direct Liquefaction	0.0054	0.0024	0.0023	0.0072	0.0014	0.0187
Oil Shale						
Residuals						
Current Consumption		0.0458	0.1049	0.0490	0.2133	0.4130
Indirect Liquefaction		-	-	-	-	-
Direct Liquefaction		0.0011	0.0025	0.0012	0.0052	0.0100
Oil Shale						
Total						
Current Consumption	0.4025	0.2208	0.3909	1.0410	0.2501	2.3053
High-Btu Gasification	0.0356	0.0161	0.0287	0.0033	0.0003	0.0840
Indirect Liquefaction	-	0.0024	0.0012	0.2964		0.3000
Direct Liquefaction	0.0074	0.0037	0.00705	0.00845	0.0066	0.0332
Oil Shale						

[a]Includes distillate fuel oil, jet fuel, and kerosene

TABLE 33. LIKELY UTILIZATION PATTERNS OF MAJOR SYNFUEL PRODUCTS BY REGIONS AND BY SECTORS--SCENARIO II--1993-2000 TIME PERIOD, REGION IV (III MMBPD)

Product	SECTOR					
	Residential	Commercial	Industrial	Transport-ation	Electric Utilities	Total
Natural Gas						
Current Consumption	0.1893	0.1299	0.3184	0.0438	0.1063	0.7877
High-Btu Gasification						
Indirect Liquefaction						
LPG						
Current Consumption	0.1567	0.0174	0.0739	0.0025		0.2505
Indirect Liquefaction	-	-	-	-		-
Direct Liquefaction	0.0056	0.0006	0.0027	0.0001		0.0090
Gasoline						
Current Consumption		0.0100	0.0035	1.3297		1.3432
Indirect Liquefaction		0.0010	0.0005	0.1485		0.1500
Oil Shale						
Middle Distillates[a]						
Current Consumption	0.0779	0.0392	0.1033	0.3996	0.0459	0.6659
Indirect Liquefaction		-	-	-	-	-
Direct Liquefaction	0.0044	0.0022	0.0058	0.0224	0.0026	0.0374
Oil Shale						
Residuals						
Current Consumption		0.0290	0.1392	0.0566	0.2774	0.5022
Indirect Liquefaction		-	-	-	-	-
Direct Liquefaction		0.0012	0.0055	0.0023	0.0110	0.0200
Oil Shale						
Total						
Current Consumption	0.4239	0.2255	0.6383	1.8322	0.4296	3.5495
High-Btu Gasification		-	-	-		-
Indirect Liquefaction	-	0.0010	0.0005	0.1485	-	0.1500
Direct Liquefaction	0.0100	0.0040	0.0140	0.0248	0.0136	0.0664
Oil Shale						

[a]Includes distillate fuel oil, jet fuel, and kerosene

TABLE 34. LIKELY UTILIZATION PATTERNS OF MAJOR SYNFUEL PRODUCTS BY REGIONS AND BY SECTORS--SCENARIO II--1993-2000 TIME PERIOD, REGION V (IN MMBPD)

Product	SECTOR					
	Residential	Commercial	Industrial	Transport-ation	Electric Utilities	Total
Natural Gas						
Current Consumption	0.8052	0.3841	0.6953	0.0173	0.0362	1.9381
High-Btu Gasification	0.0174	0.0083	0.0151	0.0004	0.0008	0.0420
Indirect Liquefaction						
LPG						
Current Consumption	0.1924	0.0214	0.1448	0.0025		0.3611
Indirect Liquefaction	-	-	-	-		-
Direct Liquefaction	0.0108	0.0012	0.0081	0.0001		0.0202
Gasoline						
Current Consumption		0.0097	0.0306	1.4862		1.5265
Indirect Liquefaction		-	-	-		-
Oil Shale		0.0002	0.0007	0.0357		0.0366
Middle Distillates[a]						
Current Consumption	0.2685	0.1122	0.0874	0.3534	0.0604	0.8819
Indirect Liquefaction	0.0015	0.0006	0.0005	0.0020	0.0004	0.0050
Direct Liquefaction	0.0227	0.0095	0.0074	0.0300	0.0052	0.0748
Oil Shale	0.0484	0.0202	0.0158	0.0638	0.0109	0.1591
Residuals						
Current Consumption		0.0636	0.1229	0.0236	0.0904	0.3005
Indirect Liquefaction		-	-	-	-	-
Direct Liquefaction		0.0084	0.0164	0.0032	0.0120	0.0400
Oil Shale		0.0041	0.0079	0.0015	0.0059	0.0194
Total						
Current Consumption	1.2661	0.5910	1.0810	1.8830	0.1870	5.0081
High-Btu Gasification	0.0174	0.0083	0.0151	0.0004	0.0008	0.0420
Indirect Liquefaction	0.0015	0.0006	0.0005	0.0020	0.0004	0.0050
Direct Liquefaction	0.0335	0.0191	0.0319	0.0333	0.0172	0.1350
Oil Shale	0.0484	0.0245	0.0244	0.1010	0.0168	0.2151

[a]Includes distillate fuel oil, jet fuel, and kerosene

TABLE 35. LIKELY UTILIZATION PATTERNS OF MAJOR SYNFUEL PRODUCTS BY REGIONS AND BY SECTORS--SCENARIO II--1993-2000 TIME PERIOD, REGION VI (IN MMBPD)

Product	SECTOR					
	Residential	Commercial	Industrial	Transport-ation	Electric Utilities	Total
Natural Gas						
Current Consumption	0.2428	0.1641	2.0847	0.1008	1.0984	3.6962
High-Btu Gasification						
Indirect Liquefaction						
LPG						
Current Consumption	0.1329	0.0148	0.0935	0.0099	-	0.2511
Indirect Liquefaction	-	-	-	-		
Direct Liquefaction	0.0056	0.0006	0.0040	0.0004		0.0106
Gasoline						
Current Consumption		0.0053	0.0033	0.9437		0.9523
Indirect Liquefaction						
Oil Shale						
Middle Distillates[a]						
Current Consumption	0.0217	0.0574	0.1350	0.3386	0.0202	0.5729
Indirect Liquefaction				-	-	
Direct Liquefaction						
Oil Shale						
Residuals						
Current Consumption		0.0123	0.1057	0.1801	0.1051	0.4032
Indirect Liquefaction						
Direct Liquefaction						
Oil Shale					-	
Total						
Current Consumption	0.4028	0.2539	2.4222	1.5731	1.2237	5.8757
High-Btu Gasification					-	
Indirect Liquefaction	-	-	-	-		-
Direct Liquefaction	0.0056	0.0006	0.0040	0.0004		0.0106
Oil Shale						

[a]Includes distillate fuel oil, jet fuel, and kerosene

TABLE 36. LIKELY UTILIZATION PATTERNS OF MAJOR SYNFUEL PRODUCTS BY REGIONS AND BY SECTORS--SCENARIO II--1993-2000 TIME PERIOD, REGION VIII (IN MMBPD)

Product	SECTOR					
	Residential	Commercial	Industrial	Transport-ation	Electric Utilities	Total
Natural Gas						
Current Consumption	0.0984	0.0633	0.1121	0.0071	0.0186	0.2995
High-Btu Gasification	0.0138	0.0089	0.0157	0.0010	0.0026	0.0420
Indirect Liquefaction	0.0214	0.0138	0.0244	0.0016	0.0040	0.0652
LPG						
Current Consumption	0.0515	0.0057	0.0162	0.0005		0.0739
Indirect Liquefaction	0.00014	0.00002	0.00004	0.0000		0.0002
Direct Liquefaction						
Gasoline						
Current Consumption		0.0018	0.0145	0.2545		0.2708
Indirect Liquefaction		0.0009	0.0070	0.1211		0.1290
Oil Shale		0.0002	0.0019	0.0327	-	0.0348
Middle Distillates[a]						
Current Consumption	0.0185	0.0165	0.0238	0.0907	0.0021	0.1516
Indirect Liquefaction						
Direct Liquefaction	-	-	-	-	-	-
Oil Shale	0.0184	0.0165	0.0237	0.0904	0.0021	0.1511
Residuals						
Current Consumption		0.0135	0.0222	0.0043	0.0014	0.0414
Indirect Liquefaction		0.0004	0.0008	0.00015	0.00005	0.0014
Direct Liquefaction		-	-	-	-	
Oil Shale		0.0060	0.0099	0.0019	0.0006	0.0184
Total						
Current Consumption	0.1684	0.1008	0.1888	0.3571	0.0221	0.8372
High-Btu Gasification	0.0352	0.0227	0.0401	0.0026	0.0066	0.1072
Indirect Liquefaction	0.00014	0.00132	0.00784	0.12125	0.00005	0.1306
Direct Liquefaction	-	-	-	-	-	-
Oil Shale	0.0184	0.0227	0.0355	0.1250	0.0027	0.2043

[a]Includes distillate fuel oil, jet fuel, and kerosene

TABLE 37. LIKELY UTILIZATION PATTERNS OF MAJOR SYNFUEL PRODUCTS BY REGIONS AND BY SECTORS--SCENARIO II--1993-2000 TIME PERIOD, REGION X (III MMBPD)

Product	SECTOR					
	Residential	Commercial	Industrial	Transport-ation	Electric Utilities	Total
Natural Gas						
Current Consumption	0.0312	0.0279	0.1134	0.0096	0.0118	0.1939
High-Btu Gasification						
Indirect Liquefaction	-					
LPG						
Current Consumption	0.0094	0.0010	0.0098	0.0003		0.0205
Indirect Liquefaction						
Direct Liquefaction						
Gasoline						
Current Consumption		0.0029	0.0040	0.2657		0.2726
Indirect Liquefaction		-	-	-		
Oil Shale		0.00002	0.00003	0.00175		0.0018
Middle Distillates[a]						
Current Consumption	0.0278	0.0269	0.0374	0.1278	0.0027	0.2226
Indirect Liquefaction						
Direct Liquefaction	-	-	-	-	-	-
Oil Shale	0.0010	0.0010	0.0013	0.0046	0.0001	0.0080
Residuals						
Current Consumption		0.0096	0.0245	0.0295		0.0636
Indirect Liquefaction						
Direct Liquefaction			-	-		-
Oil Shale		0.0001	0.0004	0.0005		0.0010
Total						
Current Consumption	0.0684	0.0683	0.1891	0.4329	0.0145	0.7732
High-Btu Gasification						
Indirect Liquefaction						-
Direct Liquefaction	-	-	-	-	-	-
Oil Shale	0.0010	0.00112	0.00173	0.00685	0.0001	0.0108

[a]Includes distillate fuel oil, jet fuel, and kerosene

TABLE 38. LIKELY UTILIZATION PATTERNS OF MAJOR SYNFUEL PRODUCTS BY REGIONS AND BY SECTORS--SCENARIO II--1993-2000 TIME PERIOD, REGION IV (IN MMBPD)

Product	SECTOR					
	Residential	Commercial	Industrial	Transport-ation	Electric Utilities	Total
Natural Gas						
Current Consumption	0.2795	0.1307	0.2625	0.0145	0.1825	0.8697
High-Btu Gasification	0.0135	0.0063	0.0127	0.0007	0.0088	0.0420
Indirect Liquefaction						
LPG						
Current Consumption	0.0283	0.0032	0.0469	0.0010		0.0794
Indirect Liquefaction						
Direct Liquefaction						
Gasoline						
Current Consumption		0.0097	0.0040	0.9561		0.9698
Indirect Liquefaction						
Oil Shale						
Middle Distillates[a]						
Current Consumption	0.0108	0.0104	0.0599	0.3983	0.0118	0.4912
Indirect Liquefaction						
Direct Liquefaction						
Oil Shale						
Residuals						
Current Consumption		0.0076	0.0393	0.1582	0.2539	0.4590
Indirect Liquefaction						
Direct Liquefaction						-
Oil Shale						
Total						
Current Consumption	0.3186	0.1616	0.4126	1.5281	0.4482	2.8691
High-Btu Gasification	0.0135	0.0063	0.0127	0.0007	0.0088	0.0420
Indirect Liquefaction				-		
Direct Liquefaction						
Oil Shale						

[a]Includes distillate fuel oil, jet fuel, and kerosene

TABLE 39. LIKELY UTILIZATION PATTERNS OF MAJOR SYNFUEL PRODUCTS BY REGIONS AND BY SECTORS--SCENARIO II--1993-2000 TIME PERIOD, REGION VII (IN MMBPD)

Product	SECTOR					
	Residential	Commercial	Industrial	Transport-ation	Electric Utilities	Total
Natural Gas						
Current Consumption	0.1868	0.1222	0.1885	0.0392	0.0803	0.617
High-Btu Gasification	0.0127	0.0083	0.0129	0.0026	0.0055	0.042
Indirect Liquefaction					-	
LPG						
Current Consumption	0.1212	0.0135	0.0711	0.0012		0.207
Indirect Liquefaction						
Direct Liquefaction						
Gasoline						
Current Consumption		0.0050	0.0202	0.4276		0.452
Indirect Liquefaction				-		
Oil Shale						
Middle Distillates[a]						
Current Consumption	0.0315	0.0203	0.0311	0.1251	0.0113	0.219
Indirect Liquefaction						
Direct Liquefaction						
Oil Shale						
Residuals						
Current Consumption		0.0077	0.0150	0.0072	0.0148	0.044
Indirect Liquefaction						
Direct Liquefaction						
Oil Shale						
Total						
Current Consumption	0.3395	0.1687	0.3259	0.6003	0.1064	1.540
High-Btu Gasification	0.0127	0.0083	0.0129	0.0026	0.0055	0.042
Indirect Liquefaction						
Direct Liquefaction						
Oil Shale						-

[a] Includes distillate fuel oil, jet fuel, and kerosene

SECTION 4

CHARACTERISTICS OF SYNFUEL PRODUCTS

This section reviews the limited data available on the characteristics of synfuel products and by-products and on synfuel combustion products and use properties. Where data are available on the corresponding petroleum-based products, the synfuel products and their petroleum analogs are compared. Relevant comments on the characteristics of synfuel products as compared to petroleum products and the environmental significance of their differences obtained through interviews with potential industrial suppliers and users of synfuels are also summarized in this section.

Only limited characterization data on synfuel products are available; however, there is also a lack of comparable data on petroleum products. Surprisingly, in some cases there appears to be more data available on the synfuel properties than on the characteristics of their petroleum analogs. The limitations of the available data, and a review of some of the relevant on-going and planned programs that are expected to generate additional data, are presented in Section 7. Detailed data supporting the discussion in this section are presented in Appendices A, E, F, and G.

4.1 PHYSICAL/CHEMICAL CHARACTERISTICS

4.1.1 Shale Oil Products

Most available data on the properties of shale oil products from larger scale production operations have been collected on the DOD's synthetic fuel development program, which included producing first 10,000 barrels, then 100,000 barrels, of crude shale oil at the Anvil Points, Colorado, pilot plant (see Section E.1, Appendix E). The subsequent refining, which was carried out at two different refineries, involved producing gasoline, JP-4, JP-5, diesel fuel marine (DFM), and heavy fuel oil to military specifications. The data collected on these products and the data from other studies are presented in Appendix E. Based on analysis of the data and the detailed information in Appendix E, the following statements can be made about the characteristics of crude shale oil and shale oil-derived gasoline, JP-4, JP-5, DFM, and residual fuels in comparison with their petroleum-based analogs.

- As with crude petroleum oils, the characteristics of raw shale oils vary depending on the source and the retorting method used, and except for somewhat higher concentrations of certain elements (for example, nitrogen and arsenic), which can be reduced by appropriate refining techniques (for example, by

hydrotreating), shale oil composition falls within the composition range for petroleum crudes.

- Based on the data collected during the refining of two shale oils into products meeting military specifications, there appear to be certain differences between the characteristics of shale oil refined products and their petroleum-based analogs. However, experience with refining petroleum crudes indicates that by proper selection of the refining steps and conditions, crude shale oils can be processed to obtain products with gross characteristics similar to their petroleum-based analogs.

- Crude shale oil has a higher nitrogen and arsenic content than petroleum crudes (1.8 to 2.17 weight percent versus 0.1 weight percent, and 5 to 65 ppm versus 0.17 ppm, respectively). Unless it is reduced by processing (for example, by hydrotreating), the high nitrogen content can lead to problems in downstream refining such as cracking, reforming and hydro- cracking. High concentrations of organically bound nitrogen can also cause odor and instability problems in the products and can increase NO_x emissions during combustion. Removing of organic nitrogen by hydrotreating and acid treating, however, improves the storage stability characteristics of the product fuels, as determined by gum and JFTOT measurements (see Section E.1.3 and Table E-7, Appendix E).

- Mild hydrotreatment reduces nitrogen levels to below 100 ppm. Hydrotreatment also significantly reduces arsenic content.

- Crude shale oil contains significantly less vanadium than petroleum crudes (0.1 to 0.55 ppm versus 4.4 ppm) (see Table E-2, Appendix E). Because vanadium content directly influences the conversion of sulfur to SO_3 during combustion, it can be concluded that sulfate emissions from shale oil should be less than conventional petroleum crudes.

- Most crude shale oils have consistently higher pour points than most petroleum crudes ($+50^{\circ}F$ to $+85^{\circ}F$ versus $-30^{\circ}F$ to $+57^{\circ}F$ see Table E-1, Appendix E). Distillation data also shows a lower portion of the $650^{\circ}F$ boiling fraction with shale oils (roughly 60 percent or more of the crude shale oil boils above $650^{\circ}F$ compared to 40 to 50 percent for three petroleum crudes tested see Table E-1, Appendix E).

- Gasoline refined from crude shale oil will require reforming to raise its octane number. However, as indicated by the data in Table E-6 (Appendix E), refining causes a dramatic increase in the aromatic content of shale oil gasoline (from 10.4 volume percent to 50.1 volume percent). The presence of large amounts of aromatics in gasoline can increase PNA formation during combustion.

- Nitrogen compounds in JP-5 refined from shale oil were implicated in fuel stability problems. Removal by hydrotreatment and acid clay treatment reduced nitrogen compounds to 0.5 ppmw and produced fuels that met or exceeded the standards for storage stability characteristics as measured by RD gum and JFTOT tests (see Table E-7, Appendix E).

- The aromatic content of shale-derived JP-5 fuels is somewhat higher than for typical petroleum derived JP-5, (21.5 to 25.8 volume percent versus 16 volume percent), but is within military specification (25 volume percent maximum) (see Table E-7, Appendix E).

- Diesel fuel marine (DFM) produced from refining of a shale oil had high octane numbers (50.1) and hydrogen content (13 weight percent), which indicate good combustion properties.

- Residual fuel oil from refining of a crude shale oil met all military specifications (except pour point) for a low-sulfur, high-power No. 6 fuel oil. The sulfur concentration was well below specification for a typical No. 6 fuel oil (0.02 weight percent versus 0.24 weight percent for No. 6 fuel oil and 3.5 weight percent maximum for military specification). The nitrogen content was 0.44 weight percent (versus 0.23 weight percent for No. 6 fuel oil), which is significantly less than that for the crude shale oil (1.8 to 2.17 weight percent).

4.1.2 Direct Coal Liquefaction Products

As noted previously, of the three direct coal liquefaction processes considered, only SRC II has been tested in a pilot plant; H-Coal and EDS have not yet reached the pilot plant stage of development. Thus, the characteristics of products and process streams from bench-scale and pilot-scale units may not be representative of those from large-scale plants, a major limitation that should be clearly understood in interpreting the characterization data. It should also be noted that all three liquefaction processes can be run in different modes to produce different process oils. For example, H-Coal can be run in a boiler-fuel mode to maximize residuum production or in a syncrude mode to produce a wide range boiling fractions product. This section presents data for H-Coal syncrude oil, EDS "raw" process liquid, and SRC II whole process oil. Because coal type can affect product characteristics, where available the type of coal used is also identified.

Detailed physical and chemical characterization data for the direct liquefaction products are presented in Appendix E. The following is a summary of the data and an interpretation of their significance.

- Syncrudes from the direct liquefaction processes have lower viscosities and pour points than petroleum crudes. Kinematic

viscosity measurements at 100°F have indicated values of 2.2 and 1.1 to 1.6 cst for SRC II whole process oil and H-Coal syncrude, respectively (versus 6.14 and 18.9 cst for an Arabian light and an Arabian heavy crude, respectively). A pour point value of -80°F is reported for SRC II whole process oil (versus -30°F for the two Arabian crudes). The lower viscosities and pour points indicate better handling and transfer characteristics.

- As with shale oil, direct liquefaction syncrudes have a high nitrogen content (0.17 weight percent for H-Coal using low sulfur coal to 0.85 weight percent for SRC II whole process oil versus 0.1 weight percent for crude oil). The nitrogen, however, can be reduced to about 50 ppm by moderate hydrotreating and to less than 1 ppm by severe hydrotreating.

- The sulfur content of raw syncrudes (0.04 to 0.49 weight percent)would classify them as low sulfur feed. The sulfur content is reduced to about 20 ppm or less by hydrotreating.

- SRC II whole process oil has an aromatic content of 55 volume percent. Included in that value is almost 9 percent phenols. The aromatic content is reduced to 49 percent by intermediate severity hydrotreating and to 4 percent by severity hydrotreating.

- Naphtha from SRC II, H-Coal, and EDS contain 16.2, 18.6 and 25.3 volume percent aromatics and 3.2, 3.1 and 7.4 volume percent phenols, respectively. Hydrotreatment appears to result in an increase in total aromatic content and elimination of phenols. The hydrotreated naphtha from the three processes contain 19 to 21 volume percent aromatics.

- Naphtha from direct liquefaction processes has a low octane number (40 to 70) and hence is not suitable for direct use as gasoline. Hydrotreating/platforming or hydrocracking/platforming produces gasoline stocks with octane numbers ranging from 91.5 to 99.8.

- Gasoline or naphtha from direct liquefaction processes are substantially less volatile than petroleum-derived leaded or unleaded gasoline. The distillation end point for petroleum-derived gasoline is 340 to 345°F versus 382 to 411°F and 365 to 459°F for liquefaction naphtha and gasoline, respectively.

- Coal liquefaction naphtha can be processed to gasoline, having gross compositions (percent aromatics, olefins, saturates, etc.) similar to petroleum-derived gasoline.

- The oil distillates from the EDS process are very low in nitrogen and sulfur (0.2 to 0.6 ppm and 2 to 139 ppm, respectively). Except for a lower gravity (2.5 to 27.9 versus 30° API) and

higher flash point (136 versus 100°F), the distillates meet the specifications for No. 2 fuel oil.

- SRC II fuel oil (5.75:1 middle-to-heavy distillate ratio) is very similar to No. 6 fuel oil in characteristics, except for lower gravity (11 versus 25°API), heating value (17,081 versus 19,200 Btu/lb), pour point (-30°F versus 95°F), flash point (150 versus 200°F), and higher nitrogen content (1.02 versus 0.23 weight percent).

- Jet and diesel fuels obtained from H-coal and SRC II syncrudes meet the specifications for these products.

4.1.3 Indirect Coal Liquefaction Products

The indirect coal liquids addressed here include Fischer-Tropsch gasoline, Mobil-M gasoline, and methanol. Most of the physical and chemical properties reported for the two synthetic gasolines are estimates made by Mobil Research and Development for commercial products. Despite the fact that Fischer-Tropsch gasoline is produced commercially in South Africa, detailed chemical analysis data are not available for this product, as well as for Mobil-M gasoline and coal-derived methanol, which are not produced on a commercial scale. The most environmentally significant properties are reported below, but it should be kept in mind that these products could actually be blended with petroleum gasolines. A more detailed description of the indirect liquids is provided in Appendix E.

- Fischer-Tropsch gasoline is reported to be free of nitrogen and sulfur, but no data are available on the extent to which oxygen compounds are present.

- Estimates based on material balance calculations for a commercial-scale Fischer-Tropsch production unit indicate that the aromatics content of Fischer-Tropsch gasolines would be lower than that of typical petroleum gasoline (17 versus 24 to 36 volume percent). The estimated saturate content (60 percent) is similar to that of petroleum gasolines (56 to 59 percent), but Fischer-Tropsch gasoline is estimated to contain signicantly more olefins (20 percent) than typical petroleum gasoline (5 to 8 percent) (see Tables E-17 and E-21, Appendix E).

- The estimated Reid Vapor Pressure for Fischer-Tropsch gasoline (10 psi) is within the range determined for petroleum gasolines

marketed in the U.S. (7 to 15 psi) (see Section E.3.1, Appendix E).

- The Fischer-Tropsch synthesis unit also generate a small stream of oxygenates including alcohols, aldehdyes, and ketones. These chemicals may be distributed commercially. (At the SASOL plant in South Africa, the aldehydes are hydrogentated and methanol is used on site as make-up in the Rectisol gas cleaning unit; ethanol, propanol, butanol, pentanol, acetone, MEK, and a higher alcohol fraction are products distributed commercially (see Section E.3.1.1, Appendix E).

- Mobil-M gasoline is reported to be free of detectable quantities of nitrogen, sulfur, and oxygen.

- The estimates of the amounts of saturates, olefins, and aromatics in commercial Mobil-M gasoline (61, 7, and 33 weight percent) are very similar to the amounts typical of petroleum gasolines in the U.S. (56 to 59, 5 to 8, and 24 to 36 weight percent) (see Table E-17 and E-27, Appendix E).

- The estimated Reid Vapor Pressure for Mobil-M gasoline (9.0 psi) is within the range determined for petroleum gasolines marketed in the U.S. (7 to 15 psi) (see Table E-27 and Section E.3.1).

- The concentration of benzene, a very volatile, hazardous substance, in petroleum gasoline is approximately 0.3 volume percent to 3.0 volume percent (Reference 36); no data are available on the concentration of benzene in Fischer Tropsch gasoline or Mobil-M gasoline.

- In terms of gross characteristics, fuel-grade methanol from coal conversion is not expected to be significantly different from fuel-grade methanol derived from other sources, although it is possible that certain hazardous substances may be present in coal-derived methanol. No analytical data are available to support this assertion (Reference 36). Higher alcohols, ethers and non-methane hydrocarbons will comprise less than one percent of the crude methanol (see Table E-28, Appendix E). Water will comprise about five percent (see Table E-28, Appendix E), but this may vary if the distribution system introduces additional water, because the very hygroscopic nature of methanol.

4.1.4 Coal Gasification Products

Most of the available data on the chemical characteristics of SNG are for products from Lurgi gasifiers. Based on analysis of the data and the discussion presented in Appendix E, the following statements can be made about the chemical characteristics of SNG:

- As with natural gas, the principal component of high-Btu coal gas is methane, typically about 98.4 percent by volume (dry). The methane in natural gas ranges from 64.1 to 97.6 percent by volume, depending on the source (see Appendix E, Section E.4.1, and Table E-29).

- Minor components of high-Btu coal gas and natural gas are hydrogen, nitrogen, argon, carbon dioxide, and carbon monoxide. Trace quantities of helium may also be present in both gases. Specifications for natural gas currently require a CO level of less than 1000 ppm. Concentrations of CO in high-Btu coal gas are typically 60 ppm.

- Sulfur-containing compounds, such as hydrogen sulfide, may be present in both high-Btu coal gas and natural gas. Trace amounts of carbonyl sulfide have been observed in high-Btu coal gas (see Section E.4.1 and Table E-29, Appendix E). Gas purification and upgrading processes remove nitrogen in SNG (References 37 and 38). Propyl mercaptan is often added to natural gas to provide for odor detection in leaks.

- Recent data from a pilot unit suggest that trace quantities of metal carbonyls may be produced during SNG production in methanation, in gasification, or by reaction of CO with metals in system piping and other components (see Section E.4.1, Appendix E). Metal carbonyls have not been detected in natural gas, and would not be expected to be formed or remain in detectable quantities in natural gas under natural geological conditions.

- The concentration of metal carbonyls in SNG can be controlled by selecting proper operating conditions. The rate of metal carbonyl formation in SNG production is proportional to the total gas pressure and CO partial pressure, and is inversely proportional to temperature (References 38 and 39). Formation of nickel carbonyl, $Ni(CO)_4$, the one most readily formed, is favored at temperatures below 275°C (Reference 40).

- The recommended NIOSH permissible exposure limit for $Ni(CO)_4$ is 0.001 ppm (0.007 mg/cu m) (Reference 40). There are currently no SNG product specifications for metal carbonyls.

- Although quantitative data are currently unavailable, some trace and minor elements* may be present in SNG and few volatile

*The definitions of the terms "trace" element and "minor" element are not universal and are subject to interpretation. However, as applied to coal and synfuel products it is generally held that trace elements are those that occur in concentrations of less than 0.1 percent, and minor elements are those that occur in concentrations of 0.1 percent to 1 percent by weight (Reference 42).

elements (such as As, Se, Te, Hg and F) are likely to be found in natural gas. Some of these volatile elements are likely to be present in higher levels in SNG than in natural gas, because of their relative scarcity in natural environments and the geological constraints associated with natural gas generation.

Detailed chemical characterization data for low-/medium-Btu coal gas are provided in Section E.4.2, Appendix E, including Tables E-30, E-31 and E-32. The following is a summary and analysis of the data.

- In general, the chemical composition of low-/medium-Btu gas is highly variable, depending on such factors as coal type, gasifier type, gasifier operating conditions, and extent of gas cleaning performed.

- The major chemical components of low-Btu gas are: N_2, CO_2, CH_4, and O_2 + Ar (46.8 percent, 26.3 percent, 15.4 percent, 9.5 percent, 1.3 percent and 0.7 percent, respectively).

- Other constituents of low-Btu gas present at ppm levels or greater are sulfur species (H_2S, COS, SO_2); C_1 to C_6 hydrocarbons (CH_4, C_2H_6, C_2H_4, and various C_3 to C_6 isomers); nitrogen compounds (NH_3 and HCN); and metal carbonyls.

- A large number of trace and minor elements may also be present in the low-/medium-Btu product gas, associated with particulate matter and vapor phases (Al, Sb, As, Ba, Ce, Ga, etc.)

- In addition to C_1 to C_6 hydrocarbons, a number of high molecular weight complex organic compounds, such as dinitrotoluene and its derivatives, PCB's, benzo(a)pyrene, and biphenyl, may be present in low-Btu product gas. Many of these compounds are known or suspected carcinogens.

- Product gas from a low-Btu gasification facility was shown to contain 0.01 ppmv $Ni(CO)_4$ and 0.004 ppmv $Fe(CO)_5$ (Reference 41).

4.1.5 Summary of the Data Currently Available and Data Gaps from an Environmental Assessment Standpoint

While more physical and chemical characterization data are available for some synfuel products, for example, crude shale and gasoline derived from shale oil, than for others, for example, coal-derived methanol, in general the available data are very limited and cover only the gross characteristics, for example, ultimate analysis or composition by classes of compounds. Also, little characterization data are available for many of the petroleum-based products that are currently in widespread use. In general, the limited available data indicate that, in comparison with the petroleum products, environmentally significant characteristics of synfuel products relate to higher fuel-bound nitrogen and aromatic contents of

liquid shale oil and coal liquefaction products. As will be discussed in Section 4.2, higher levels of aromatics and fuel-bound nitrogen result in an increase in emissions of PNA's and NO_x during combustion. Although detailed characterization data are not available, synfuel products would be expected to contain trace concentrations or minor amounts of coal-derived or shale oil-derived hazardous substances.

4.2 COMBUSTION CHARACTERISTICS

4.2.1 Shale Oil Products

The DOD's synthetic fuel development program included a relatively extensive evaluation of the combustion characteristics of the shale oil products. Most of the work reported to date is based on the 10,000-barrel sample (see Section E.1, Appendix E). In addition to the DOD efforts, Southern California Edison Company (SCE) has studied the handling and combustion (in a 45-MW utility boiler) of a separate lot of whole shale oil for the Electric Power Research Institute (EPRI). Subscale and full-scale tests have also been reported on the combustion of de-ashed and de-sulfurized Paraho shale oil in gas turbine combustors. The combustion test results for shale oil products are presented in Section F.1, Appendix F, and are summarized below.

In the SCE evaluation tests, the crude shale oil was compared with the low sulfur oil.* Because of California air quality control regulations, only up to 50 percent of the burners were fueled with shale oil. The crude shale oil had a somewhat higher nitrogen content (1.98 weight percent versus 0.22 weight percent), sulfur (0.68 weight percent versus 0.27 weight percent), and ash (0.22 weight percent versus 0.009 weight percent) and was lower in heating values (HHV 18,195 versus 19,235 Btu/lb and LHV 17,145 versus 18,100 Btu/lb) than the low sulfur oil (see Table F-1, Appendix F). The SCE study indicated:

- No significant fuel handling, fuel mixing, combustion instability, smoke formation, or boiler operational problems during burning of shale oil.

*Direct utilization of "unprocessed" crude shale oil as boiler feed would have some economic merits and the SCE tests were aimed at evaluating such use potential. The study, however, was not a comparison between crude shale oil and petroleum crude.

- High NO_x emissions with the crude shale oil* (on the average 90 to 500 ppm higher during normal firing and 70 to 225 ppm higher during off-stoichiometric burning) (see Table F-2, Appendix F).

- Increase in emission of particulates with the rise in the percentage of crude shale oil in the feed (with 50 percent shale oil, the mass emissions ranged from 0.15 to 0.12 lb/M Btu compared to 0.02 lb/M Btu with low sulfur fuel alone (see Figure F-1, Appendix F).

- With shale oil, emission of a higher fraction of larger particles that should be more easily removable by the particulate control devices (90 percent of the particles were larger than 20 micrometers (μm); estimates for oil-fired boilers range from 58 weight percent below 3 μm to 90 weight percent below 7 μm (see Section F-1 and Figure F-2, Appendix F).

- Lower emission of polynuclear aromatics (PNA) with the crude shale oil (at 50 percent shale oil in the feed, the total PNA emitted was 0.92 $\mu g/m^3$, which is within the range of PNA emissions from petroleum oil burning plants — 0.1 to 9.24 $\mu g/m^3$ - see Table F-3, Appendix F).

The results of SCE studies are, in general, consistent with the results of other studies in which the combustion characteristics of whole, deashed, and desulfurized shale oils were compared with those of No. 2 petroleum distillates in a turbine combustor. These studies indicated only 10 to 20 ppm higher NO_x levels with the shale oil containing 0.33 weight percent nitrogen. (The lowest NO_x emissions were observed at highest exhaust temperature of about 2000°F). The smoke values were only slightly above those of the No. 2 distillates over most of the range of exhaust temperatures tested.

Only a limited number of combustion-related tests have been run with gasoline, jet fuels, and DFM from shale oil (see Sections F.1.2, F.1.3, and F.1.4, Appendix F). Except for slightly higher smoke and NO_x emissions, the shale-oil products have been found to exhibit combustion characteristics very similar to those of their petroleum analogs. A flight test using oil shale JP-4 in a T-39 was rated "normal" and no in-flight problems were encountered. Corrosivity measurements have indicated no compatability

*It should be noted that lower NO_x emissions would have probably been obtained if residual fuel oil from shale oil refining had been used instead of crude shale oil for comparison with the low sulfur oil. As noted in Section 4.1, residual shale fuel oil has a lower nitrogen content than the crude shale oil (0.44 to 1.4 weight percent versus 1.8 to 2.17 weight percent) (see Tables E-9 and E-2 in Appendix E).

problem with the use of DFM in ship fuel systems. Tests with typical diesel engines showed that combustion efficiency, CO, and THC were the same as for petroleum DFM.

Although the combustion studies reported to date have not included measurements of trace elements and sulfate emissions, chemical characteristics of the shale oil fuels indicate that, except for certain specific elements such as arsenic, mercury, and manganese, these emissions should be comparable to, or lower than, those for petroleum based analogs. Vanadium concentration in crude shale oil is significantly less than in petroleum crudes; because SO_3 formation is directly related to vanadium concentration, it can be concluded that SO_3 emissions under equivalent conditions (excess O_2 and S) should be less for crude shale oil.

4.2.2 Direct Coal Liquefaction Products

The bulk of the combustion testing of direct liquefaction products has been with SRC II-fuel-oil-type liquids. Various blends of SRC II liquids (2:1 to 5.7:1 mixtures of middle-to-heavy distillates) have been combusted in commercial boilers under a range of firing rate, flame configuration, and excess air conditions. Fuel handling and corrosion characteristics and emissions of NO_x, carbon monoxide, particulates, and PNA have been monitored. The conditions used and the results obtained in some of the more complete combustion tests are discussed in Section F.2, Appendix F, and are summarized in Table 40.

Based on the results summarized in Table 40, except for a higher NO_x emission, there appears to be no significant difference between the handling and combustion characteristics of SRC II fuel oil blends and No. 6 fuel oil. The investigators have concluded that the excess NO_x emissions can be eliminated and the NO_x emissions reduced to less than the 0.5 lb/M Btu EPA standard by proper burner design and combustion modification. Although no data have been collected, based on the composition data for the fuels trace element emissions for the SRC II fuels should be comparable to those for petroleum fuels.

The handling and combustion characteristics of H-Coal liquids have been evaluated only to a very limited extent. These evaluations have primarily emphasized engineering aspects (atomization, coke formation, combustion parameters); the environmental data collected in these tests have been limited to emissions of NO_x and smoke. These studies, the results of which are summarized in Tables 41, indicate that:

- H-Coal distillates, both raw and hydrotreated, appear to be compatible with No. 2 fuel oil.
- The coke formation in a turbine combustor would be a problem for raw H-Coal distillates, but is reduced dramatically by hydrotreatment.

TABLE 40. COMBUSTION TEST RESULTS FOR SRC II FUEL OILS*

Investigator	SRC-II Fuels Tested †	Equipment/test	Results
Singh et al (Reference 5; Appendix F)	MD, HD, MD/HD blend, 3:1 No.2/SRC-II blend, 1:1 No.2/SRC-II blend	Sub-scale gas-turbine like combustor	• All fuels burned well • no significant handling problem • max excess NO_x levels (with HD) 20 to 130 ppm above baseline • increase in smoke levels with decreasing hydrogen content & increasing aromaticity of fuels • decrease in % emissions of fuel-bound nitrogen (FBN) with increase in fuel FBN and outlet temperature.
Bauserman (Reference 8; Appendix F)	5:1 MD/HD	Full-scale combustor used in Westinghouse 30 to 90 MW engines; 187-h corrosion test using various alloys and SRC-II solvent wash	• NO_x emission for blend containing 9.83% FBN 30 to 120 ppm higher than No.2 distillates • decrease in smoke value with increase in exhaust temperature • corrosion/deposition problems similar to petroleum-derived products
Babcock and Wilcox (Reference 13; Appendix F)	5.75:1 MD/HD	Package boiler Ambient monitoring	• easy pumping/handling during test program (replaced hydrocarbon seals with teflon/viton seals as precausion) • no benzene/phenol emitted, based on ambient monitoring data • NO_x emissions for blend higher than for No.2 and No.5 • no tendency to smoke despite higher aromaticity • lower particulate emission in comparision with No.5 oil • ash composition for blend similar to that for No.5 oil except for Fe, Ca, Mg, Cr, Mn and Sn which were higher.
KVB (Reference 14; Appendix F)	2:1 MD/HD	44 MW field boiler	• no major operation (burner optimization, boiler deposits,etc.) problems in comparision with No.6 fuel oil • NO_x emissions about 70% higher than for No.6 fuel oil • lower particulate emissions compared to No.6 fuel oil; emissions less than proposed NSS of 0.03 lb/M Btu • PNA emissions for both blend and No.6 less than 6 μ/M^3 (6×10^{-6} lb/M Btu) • tendency for incomplete combustion comparable to No.6 fuel oil (CO levels below 50 ppm)

*See Section F.2.1, Appendix F
†SRC II fuels: MD - middle distillate, HD - heavy distillate.

TABLE 41. COMBUSTION TEST RESULTS FOR H-COAL FUELS*

Investigator	Fuels	Equipment/test	Results
Mobil Research (Reference 9, Appendix F)	Raw and hydrotreated H-Coal distillate No.2 fuel oil (reference)	Small combustion turbine	• Excellent atomization characteristics; no deposit formation in fuel lines • coke formation dependent on degree of hydrotreating; negligible coke formation with adequate hydrotreating • severly hydrotreated H-Coal liquid (10.5 and 11.7 wt.% H; FNB 0.2 wt.%) had lower NOx emissions than No.2 fuel oil (134 vs. 148 ppm) • low CO emissions (31-41 ppm)
Singh, et. al. (Reference 5, Appendix F)	H-Coal distillates (210-480°F; 300-500°F; and H-Coal atmospheric 450-650°F) No.2 fuel oil (reference)	Sub-scale gas turbine like combustor	• 30 to 60 ppm more NO_x emitted with H-Coal fuels • smoke level similar to No.2 fuel
Singh, et. al. (Reference 5, Appendix F)	H-Coal distillate (210-480°F) No.2 fuel oil (reference)	Full scale combustor	• 20 ppm excess NO_x emission with H-Coal fuel (0.17 wt.% N) than with No.2 fuel (0 wt.% N) • lower smoke values except at exhaust temperature above 1750°F

*See Section F.22, Appendix F.

- NO_x levels for severely hydrotreated H-Coal distillates are expected to be below NO_x levels for No. 2 fuel oil.

EDS fuels vary significantly in their handling and combustion characteristics. Because of immiscibility with petroleum fuels and differences in viscosity, they will require separate storage and transfer lines. Because of degradation upon exposure to air at higher temperatures (100°F and above), nitrogen blanketing in storage tanks may be necessary for at least some EDS fuels. Table 42 summarizes the combustion test results for some EDS fuels. As noted in the table, the results indicate no special problems (flame out, nozzle fouling, shutdown). These fuels burn very cleanly and, except for higher NO_x emissions (which can be reduced by hydrotreating), appear to have combustion characteristics similar to No. 2 petroleum fuel.

4.2.3 Indirect Liquefaction Products

No data on the emissions from combustion of Fischer-Tropsch or Mobil-M gasoline are currently available. Sampling of uncontrolled emissions from methanol-fueled automobiles and comparing the results with emissions from gasoline-fueled engines (see Section F.3 and Reference 16 in Appendix F), however, indicate that: (1) CO emissions are about the same but NO_x emissions are lower; (2) hydrocarbon emissions are about the same and are dominated by unburned methanol; (3) polynuclear aromatic emissions are reduced to as little as one-tenth; (4) aldehydes, particularly formaldehyde, are increased three to five fold; and (5) no lead or sulfur are emitted.

4.2.4 Coal Gasification Products

Data on the combustion characteristics of low-Btu gas have been obtained as part of an EPA-sponsored comprehensive assessment of low-Btu gasification technology involving Source Test and Evaluation (STE) programs at operating low-Btu gasification facilities. Analytical results of testing at a facility using lignite coal are presented in Section F.4, Appendix F. The data indicate that a wide variety of gaseous species can be emitted as low-Btu gas combustion products (see Table F-9, Appendix F), with the major components including N_2 (77.8 ± 5.2 percent), O_2/Ar (16.0 ± 4.8 percent) and CO_2 (5.4 ± 2.2 percent). SO_2, CS_2, HCN and NH_3 were measured at 103 ± 122, 2.8 ± 5.8, 1.0 ± 1.0 and 0.005 ppmv, respectively. The chemical analyses also indicated that a wide variety of trace and minor elements are emitted, both as particulate matter and as vapor (see Table F-10, Appendix F). The elements detected at the highest concentrations, that is, more than 120 µg/SCM, were barium, calcium, iron, magnesium, potassium, silicon, sodium, and sulfur.

Aromatic compounds were also detected as constituents of the combusted low-Btu gas. However, these compounds were generally simple ring systems and included fewer nitrogenous compounds than the uncombusted product gas. Benzo(a)anthracene was found to be present in the combusted gas at a

TABLE 42. COMBUSTION TEST RESULTS FOR EDS COAL LIQUIDS*

Investigator	Fuels	Equipment/test	Results
Quinlan (Reference 18, Appendix F)	400^{+o}F (Illinois Coal) blend containing FLEXICOKING liquid 400-1000°F blend (containing No FLEXICOKING liquid) Reference petroleum fuels: regular sulfur (2.2 wt.%S) low sulfur (0.5 wt.%S)	50-Hp package boiler	• No problems such as flame light-off, nozzle fouling or shutdown encountered • coal liquids burned cleanly with smoke levels equal to or less than reference fuels at all levels of excess air • particulate emission levels were very low for coal fuels (27 and 33 vs. 50 and 131 mg/SCM for reference fuels) • NO_x emissions from coal liquids higher than for reference fuels (490 and 580 vs. 300 and 440 ppm for reference fuels)
Quinlan and Segmond (Reference 18, Appendix F)	Raw and hydrotreated middle-distillate coal liquid No.2 fuel oil (reference)	1-gal/hr domestic oil burner	• coal liquids burned cleanly (same smoke number as reference fuel at a given level of excess air) • hydrotreated coal liquid interchangeable with No.2 fuel • NO_x emissions from raw distillate higher than with hydrotreated or reference fuel
Singh, et al. (Reference 5, Appendix F)	EDS whole process liquid EDS process without 650°F fraction No.2 fuel oil (reference)	Sub-scale turbine-like combustor	• smoke levels slightly higher than for No.2 fuel • NO_x 60 to 75 ppm higher for the whole process liquid (0.08 wt.%N) compared to emissions for No.2 fuel.

*See Section F.2.3, Appendix F.

concentration of 450 μg/SCM. Not present in the product gas were benzo(a)pyrene, dibenzo(a,h)anthracene, and 7,12-dimethyl-benzo(a)anthacene.

Although no actual data are currently available, the combustion products of medium-Btu gas are expected to be similar to those for low-Btu gas.

4.2.5 Summary Of The Data Currently Available And The Data Gaps From An Environmental Assessment Standpoint

Based on the synfuel utilization scenarios developed in Sections 2 and 3, using synfuel products as fuel in combustion systems provides the greatest potential for exposure. Thus, combustion emissions and their potential impacts on air quality are of highest priority in any comprehensive environmental assessment of synfuel products utilization.

While more data are available on combustion characteristics of some synfuel products, for example, shale oil and SRC II fuel oils, little or no data are available on other synfuel products, for example, Mobil-M and Fischer-Tropsch gasolines. In general, the limited combustion tests and evaluations, that have been conducted have used batches of products produced in pilot-plant units and have focused primarily on engineering aspects of combustion (fuel handling, atomization, and corrosion characteristics) with comparatively little emphasis on a comprehensive environmental assessment of combustion emissions. For products for which some environmental data have been reported, such data primarily relate to emissions of conventional pollutants such as particulates and NO_x. Except for some recently generated data on the concentrations of trace and minor elements in flue gas from low-Btu gas combustion, environmental data, as well as information on various environmentally significant organic constituents (for example, specific PNA's), are generally unavailable for synfuel products. Also, the reported test results are largely for use as fuels in boilers; other fuel uses, such as for use as gasoline in automobiles, have not been evaluated, or if evaluated, the results have not yet been published.

Based on the limited combustion test data available for crude shale oil and shale oil-derived gasoline, jet fuels, and DFM, these products generally produce higher smoke and NO_x emissions than their petroleum analogs. Higher NO_x emissions have also been observed in the combustion of SRC II, EDS and H-coal fuel oils. It has been asserted that the excess NO_x emissions from boilers can be reduced via combustion modifications.

4.3 BIOLOGICAL AND HEALTH EFFECTS CHARACTERISTICS

4.3.1 Shale Oil Products

Biological and health effects characteristics of shale oil and shale oil products have been examined only to a very limited extent, using samples from various experimental and pilot plant production and refining

operations. Test results obtained to date indicate that, with the exception of the crude shale oil from surface retorting, which has been found to be more toxic than crude petroleum, there appear to be no significant differences between petroleum and shale-derived products. The following are the highlights of the reported data (see Section G-1, Appendix G for details).

- Ames Salmonella tests conducted on crude surface retort shale oil, crude in situ shale oil, and crude petroleum oils indicate that shale oil is slightly more mutagenic than crude petroleum oil. One set of tests with Salmonella typhimurium TA 98 indicated values of 0.59 to 0.65 revertants/μg for shale oil versus 0.01 revertants/μg for two petroleum crudes and 114 ± 5 and 5430 ± 394 revertants/μg for benzo(a)pyrene and 2-aminoanthracene (two known carcinogens), respectively (see Table G-2, Appendix G).

- Skin-painting studies with mice indicated that crude shale oil is more potent than crude petroleum in inducing tumors, both in terms of higher observed incidences and shorter latency periods (see Table G-7, Appendix G).

- Mammalian cell culture studies (see Table G-5, Appendix G) indicated higher cytotoxicity for shale oil than for petroleum crudes (dose required to reduce number of colony producing cells to 50 percent of control values was 40 to 200 μg/ml for shale oil fractions versus 190 to 350 μg/ml for three petroleum crudes; the corresponding values for three reference substances, cadmium chloride, zinc chloride, and lead chloride were 0.3, 6.8 and 37 μg/ml, respectively). Shale oil also produced a higher percentage (3 percent) of transformed cell colonies than crude petroleum (0.2 to 0.4%) (See Table G-6, Appendix G).

- Acute toxicity of shale oil appears comparable to that of petroleum crude (oral rat LD_{50} of 9.22 g/kg versus >12 g/kg for petroleum crudes.

- Eye irritation tests with rabbits and skin sensitization and dermal irritation tests with guinea pigs indicated no significant differences between petroleum and shale-derived JP-5 and DFM fuels. Based on test results, all four fuels would be considered non-irritants.

- Data similar to the above data for crude shale oil and shale oil JP-5 and DFM are not currently available for other shale derived products (e.g., residual fuel oil). Studies to generate some of the needed data are currently underway.

4.3.2 Direct Liquefaction Products

Although a considerable effort is currently underway to generate the data needed to assess biological and health characteristics of direct coal liquefaction products, at the present time very little health and ecological effects data are available. The limited available data largely relate to primary products (e.g., fuel oils) and do not cover all secondary products (e.g., gasoline) or emissions associated with product end uses (e.g., combustion). No health effects data have been reported for any of the EDS products. The bulk of the available data discussed in this section pertain to the SRC II products.

Table 43 summarizes the available health effects data for SRC II products (available data cover only naphtha, light fuel oil, and heavy distillates). These data indicate that based on Ames test and skin painting studies naphthas from petroleum and SRC II are not significantly different in their mutagenic or tumorigenic activity; SRC II appears to be more acutely toxic via skin absorption. No health or ecological effects tests have been conducted on gasolines produced from SRC II naphtha.

Neither SRC II middle distillate nor petroleum-derived No.2 fuel oil appears to be mutagenic. SRC II middle distillate and petroleum middle distillate (No.2 diesel oil) exhibit similar cytotoxicity, although the SRC II product may be slightly more toxic. SRC II middle distillate is somewhat more toxic than No. 2 diesel oil when orally administered to rats and is reported to cause burns when it comes in contact with human skin, a problem not associated with petroleum middle distillates.

Skin-painting tests indicate that both petroleum-derived industrial fuel oils and SRC II-derived heavy distillates pose considerable skin carcinogenicity hazards. The results of tests of mutagenicity, cytotoxicity, and cell transformation indicate that the SRC II heavy distillate is a very toxic substance.

The very limited health effects studies that have been conducted with H-Coal products have been primarily with naphtha (from the syncrude mode of operation) and middle distillate (from the fuel oil mode of operation). As with petroleum-derived naphtha, H-Coal naphtha has been found to be non-mutagenic (Ames Test). No other health effects data are available for H-Coal naphtha. The relatively high phenols content of naphtha (3.1 volume percent), however, indicate a higher degree of toxicity for H-Coal naphtha as compared to petroleum products, which generally contain less than 1 volume percent phenols. Health effect data for H-Coal middle distillates (fuel oil mode) are presented in Table 44. Comparable test results for petroleum middle distillates are not available. As noted in Table 44, the untreated middle distillate show moderate to high activity for mutagenicity, tumor production, and cytoxicity. The potency is eliminated or reduced by hydrotreating.

TABLE 43. SUMMARY OF HEALTH EFFECTS DATA FOR SRC II PRODUCTS AND (WHERE AVAILABLE) FOR PETROLEUM ANALOGS*

Test	Naphtha	Light Fuel Oil	Heavy Distillates
Ames Mutagenicity	No mutagenic activity for SRC-II (revertants/µg < 0.01) or petroleum naphtha	No measurable mutagenic activity (revertants/µg < 0.01); mutagenic activity demonstrated for certain petroleum distillates	Most mutagenic of the three SRC-II products (a 40 ± 23 revertants/µg)
Cytotoxicity (on cultured mammalian cells)	180 µg/ml dose required to produce a 50% reduction in relative plating efficiency (RPE); no comparative data for petroleum analog (RPE_{50} for crude petroleum 190-350 µg/ml)	RPE_{50}: 200 µg/ml (vs. 250 µg/ml for Diesel oil No.2 and 0.3 µg/ml for cadmium chloride)	with an RPE_{50} of 30 µg/ml, most cytoxic of all synfuel products tested; very active in effecting cell transformation
Skin-painting	As with petroleum naphtha extreme low tumorogenic activity; tumor incidence: 1/46 at 20 mg/application after 456 days (vs. 44/46 at 0.005 mg/application for benzo(a)pyrene, a known carcinogen)	—	highly potent†; 12% and 100% tumor incidents after 456 days at 0.23 and 2.3 mg/application, respectively; 85% of tumors malignant
Acute and subchronic toxicity	Moderately toxic. Acute gavage rat LD_{50}: 2.3 g/Kg; Subchronic (5 days) gavage rat LD_{50}: 0.96 g/Kg	More toxic than diesel oil (acute rat LD_{50}=3.75 g/Kg vs. 11.8 g/Kg); sub acute gavage rat LD_{50}=1.48 g/Kg	LD_{50} about the same as for naphtha and light fuel oil
Maternal and fetal toxicity (rats)	No significant enhanced toxicity to embryo or the fetus (risk only slightly higher than for the mother)	Same as for naphtha	Same as for naphtha
Toxicity via skin absorption	Unlike petroleum naphtha, shows some acute effect at a high dose levels (1.6 g/Kg)	Unlike the petroleum products, can cause skin burns	—

*See Section G.2.1, Appendix G for details

†No comparable data available for petroleum analog, but industrial fuels oils have been shown to present considerable skin carcinogenicity hazard.

TABLE 44. HEALTH EFFECTS TEST RESULTS FOR H-COAL FUEL OILS *

Test	Hydrotreatment			
	Raw	Low	Medium	High
Mutagenicity (Ames)	H†	H	H	N
Tumor Production	M	N	N	N
Cytotoxicity	M	M	M	L

*From Reference 15 in Appendix G

†H=high; L=low; M=medium; N=no response

4.3.3 Indirect Liquefaction Products

Carcinogenicity testing has been conducted on a raw gasoline fraction (boiling point up to 204°C) from a Fischer-Tropsch demonstration plant and a considerable amount of research on the toxic effects of methanol has been performed. However, no other health or ecological effects tests have been carried out on Fischer-Tropsch gasoline and no tests have been conducted on Mobil-M gasoline. In the absence of actual test data, comparison of the chemical composition of synthetic and petroleum gasolines can provide a basis for judging their relative toxicities. The test results and conclusions reached based on the consideration of compositions are as follows (see Section G.3, Appendix G):

- Application of Fischer-Tropsch gasoline to the skin did not induce skin cancer in mice or rabbits. Injection into the thigh of rats did, however, caused carcinomas attributable to the treatment in 2 of the 15 rats tested. Comparable tests have apparently not been conducted for petroleum gasolines.

- Examination of the data available on the gross characteristics of Fischer-Tropsch and Mobil-M gasolines provides no reason to believe that the two products will produce significantly different health effects than petroleum gasoline.

- Based on the gross characteristics data, the health effects caused by exposure to coal-derived methanol are not expected to be different from those of the methanol currently being used. Widespread distribution of methanol as a motor fuel would, however, result in increased exposure to the chemical. The effects of chronic exposures to methanol are not known.

4.3.4 Coal Gasification Products

Little data are currently available on the biological and health effects of high-Btu coal gas. Although a number of high-Btu gasification pilot plants have been in operation in the United States, the focus has been on improving the gasification process, with little emphasis on health and biological effects of product gases and waste streams.

Carbon monoxide, hydrogen sulfide and metal carbonyls, which are present in high-Btu gas in trace amounts, are the principal toxic constituents of SNG. Although the remaining constituents, methane, carbon dioxide, nitrogen, argon, and hydrogen, are non-toxic, they can result in asphyxia if their combined concentration exceeds 20 to 30 percent (volume) in air. As indicated in Section 4.1.4, CO and H_2S are also present in natural gas, but metal carbonyls are not. The principal toxic effect of carbon monoxide is also asphyxia by combining with hemoglobin and rendering it incapable of carrying oxygen to the tissues. Because exposure to 1000 ppm or more is considered dangerous, current standards for pipeline quality gas require the CO concentration to be below 1000 ppmv. High-Btu coal gas would be upgraded to meet this criteria.

Hydrogen sulfide is an irritant at 20 ppm and an asphyxiant at higher concentrations. Because a typical H_2S concentration in high-Btu coal gas is 0.2 ppmv, hydrogen sulfide does not pose a significant health hazard.

Toxic metal carbonyls, which are present in high-Btu coal gas in trace amounts, are $Ni(CO)_4$ and $Fe(CO)_5$. Nickel carbonyl is extremely toxic, with a lethal exposure in man of 30 ppm for 30 minutes. Chronic exposure is associated with a high incidence of cancer of the respiratory tract and nasal sinuses. Iron carbonyl is less toxic than nickel carbonyl.

Limited data are available on the biological and health effects characteristics of low-/medium-Btu coal gas (see Section G.4.2, Appendix G). The Department of Energy is currently sponsoring investigations of the toxicological characteristics of product gas and effluents from low-Btu gasifiers. Toxicological studies have also been conducted by EPA on products of low-Btu combustion. EPA studies have involved testing of particulates and resin extracts from combustion products from a Wellman-Galusha gasification plant in Fort Snelling, North Dakota (Reference 26, Appendix G). The particulates and extracts were obtained using a Source Assessment Sampling System (SASS), which consists of a series of impingers, filters, and resins for the collection of particulates and gaseous impurities. Cytotoxicity, acute toxicity, and Ames mutagenicity tests on the extracts indicated no mutagenic activity at concentrations below 10 µl/test plate. (The extract was found to be extremely toxic to the tester strains at concentrations greater than 10 µl/test plate, which precluded carrying out the mutagenicity testing). The extract was moderately cytotoxic to human lung fibroblast cells tested in vitro and had an LD_{50} of greater than 10 g/kg, indicating low oral toxicity.

4.3.5 Summary of the Data Currently Available and Data Gaps from an Environmental Assessment Standpoint

While a considerable effort is underway to develop health effects data on synfuel products, at the present time the limited available health effects data generally address only a few of the primary synfuel products. The data also do not cover many of the secondary synfuel products or emissions associated with the use of the products as fuels. As with the chemical characteristics, surprisingly little health effects data are available for many of the petroleum products (which are currently in widespread use) to provide a baseline for comparison of the relative safety of the synfuel products. Samples that have been tested are from batches of products from pilot-plant operations. Health effects characteristics of the following products appear to be similar to those of their petroleum analogs, and should not present special health effects concerns: shale oil-derived jet fuels and DFM; SRC II middle distillate and naphtha; severely hydrotreated H-Coal fuel oil and H-Coal naphtha; F-T gasoline; and low-/medium-Btu gas. Crude shale oil, however, has been shown to be more mutagenic, tumorigenic, and cytotoxic than petroleum crudes. Also, heavy distillate from SRC II has been shown to present considerable skin carcinogenicity, cytotoxicity, mutagenicity, and cell transformation hazard.

4.4 RELEVANT COMMENTS FROM POTENTIAL MAJOR SYNFUEL SUPPLIERS AND USERS

Concurrent with their process development and optimization activities, the developers of the synfuels are currently involved in a number of programs aimed at characterizing synfuel products and at identifying and developing refining procedures necessary to produce products comparable or superior to currently used petroleum-based products. Anticipating a switch to synfuel products, the designers and manufacturers of engines, boilers, and other user's equipment, and other synfuel users (for example, the petrochemical industry) have also been engaged in programs involving assessment of combustion and use characteristics of synfuel products in order to identify necessary modifications to equipment and handling systems. Many of these programs are on-going and because they are generally considered company proprietary, the results are not publicly available. To obtain insights into the thinking of potential synfuel suppliers and users, interviews were conducted in this study with three major potential suppliers (Exxon, Tosco and Shell), a petroleum industry trade organization (American Petroleum Institute), three potential major users (General Motors, a major chemical company and Department of the Navy) and Electric Power Research Institute (representing the utility industry's interests). Details of the interviews are presented in Appendix A. Those portions of the acquired information that relate to the characteristics of synfuels in comparison to petroleum products and the environmental significance of such differences are summarized in Tables 45 and 46. It should be emphasized that the data presented here and in Appendix A represent the views expressed by the interviewees. Some of the assertions and statements made, which are reproduced here without

TABLE 45. SUMMARY OF COMMENTS FROM SYNFUELS SUPPLIERS ON THE RELATIVE CHARACTERISTICS OF SYNFUELS AND PETROLEUM PRODUCTS

Company/Organization	Comments
EXXON	Shale oil • Raw shale oil is equivalent to low-grade petroleum crude and can be processed to a premium feed for refineries • Refinery processes are continueously modified to handle different crudes and can readily handle shale oil which is equivalent to a heavy crude • Shale oil will produce essentially the same products as currently produced from petroleum (in terms of ASTM fuel specs). Coal liquids • Direct liquefaction products are highly aromatic; upgrading via severe hydrotreating/hydrocracking necessary to produce petroleum-like products • Naphtha from direct liquefaction processes is easily converted to prime mogas base stock; EDS is being refined to yield all naphtha and distillates • Products from indirect coal liquefaction are very similar to petroleum based products • Heavy oils will contain polynuclear aromatic substances (PNA's). Handling and burning of heavy oils may be an issue and long term health effects of combustion products not known. Some testing would be necessary • Except for some effect on the optic nerve, methanol is more benign than gasoline. Methanol spilled in water is less of a problem than gasoline.
TOSCO	• There are no composition unique to oil shale compared to petroleum; crude petroleum has a range of composition that brackets crude shale oil • The higher nitrogen and arsenic contents of shale oil can be removed by hydrotreating and use of catalyst guard beds, respectively • Products (e.g., gasoline) from shale oil will be produced to specifications as are petroleum based products • Toxicity testing indicates the same or a lesser carcinogenicity potential for shale oil than for conventional crude or industrial fuel • As far as polycyclic aromatic hydrocarbons (PAH's) are concerned, no difference between shale oil and crude oil has been found.

(continued)

TABLE 45. (CONTINUED)

Company/Organization	Comments
API	• Comsumers will see no difference between synfuels and traditional petroleum; after refining and processing all products will meet current specifications; such things as aromatics, trace elements, etc. will be controlled • All petroleum crudes are different and processing is tailored for each crude. Processing and refining of synfuels will be very analogus to conventional petroleum processing problems • Environmental risks with synfuels will be the same as for current products • When comparing toxicity, synfuels products should be compared with their petroleum analogs; relative and not absolute toxicity and impacts should be considered.

TABLE 46. SUMMARY OF COMMENTS FROM POTENTIAL SYNFUEL USERS ON THE RELATIVE CHARACTERISTICS OF SYNFUELS AND PETROLEUM PRODUCTS

Company/Organization	Comments
General Motors	• For the most part, the users will not identify differences between petroleum products and synfuels • Refining and processing will be the key to acceptable use of synfuels. Suppliers can process synfuel feedstocks to yield any specified products; the extent of processing is a matter of economics • Optimum utilization of synfuels necessitates examination of possible engine modifications to take advantage of certain synfuel properties (or to reduce processing required); e.g., higher compression engines should efficiently handle highly aromatic coal liquids. GM is involved in R&D work to take advantage of certain synfuel properties and is looking at use of less refined products. • Major characteristics of synfuels which, unless corrected, may impact synfuel utilization are high arsenic content of whole oil products (impacting catalytic after burners in cars), high fuel-bound nitrogen content of shale oil products (yielding NO_x emissions in excess of the standard 1.0 g/mi), high aromatic content of coal-derived products which may result in generation of PNA's in excess of what can be handled by existing catalytic convertors and high evaporative emissions from use of alcohol as gasoline additive.
A Major Chemical Company	• Synthetic LPG will be similar to the LPG produced from natural gas; acid gas purification of medium-Btu gas will take out trace contaminants. • Some coal liquefaction products may contain higher amounts of PNA and substituted phenols. This is, however, also the current situation with residuals from pyrolysis of heavy liquids for chemical production operations. • Extensive chemical alterations which take place in chemical operations would also affect chemical alteration of any hazardous constituents
Department of the Navy	• Characteristics of synfuels are under investigation; some differences (e.g., higher nitrogen content in shale oil products) have been noted • Because of current heavy investment in equipment, at least in the next 10-20 years new fuels should meet specifications for use in existing equipment • Existing specifications must be modified or new specifications must be drawn up to take care of any problems associated with new fuels (e.g., toxicity or health effects considerations, high nitrogen content which can cause gumming, or extensive hydrotreating which may destroy product lubricity) • In evaluating health effects of synfuels, petroleum products should be used as a baseline; emphasis should be on areas which create "worse" problems than petroleum products.
EPRI	• Distilled shale oil products will look much like petroleum products • Some form of combustion modification will be needed with liquid synfuels to reduce NO_x emissions • Potential health effect risks associated with handling and end uses of synfuels is not known.

alteration, are not supported by the data presented in this report. These assertions and statements may have been based on an inadequate data base or on results of the studies conducted by the industry that were not available to this study.

As noted in Table 45, the suppliers generally take the position that there will be no discernible or significant differences between the refined liquid products produced from synfuels and the comparable products from petroleum or natural gas. These synfuels products will be produced to specifications using conventional, well-known processes. This, then, naturally leads to a concensus among suppliers that no additional or special concerns are warranted. In the case of shale oil, for example, it is indicated that there are no compositions unique to shale oil compared to petroleum and that the physical and chemical characteristics of synfuel products will be essentially the same as those for refined petroleum products. (The products are processed to specifications and the users will identify no significant differences). It is also pointed out that crude petroleum, as derived from various locations, exhibits a range of compositions that brackets oil shale. Unacceptable quantities of nitrogen, sulfur, and arsenic are removed by upgrading, hydrotreating, or other refining steps. This additional processing or upgrading is a matter of economics. The trend in the U.S. is to upgrade the bottom of the barrel, and the processing and refining of synfuels will be very analogous to conventional petroleum processing.

While expecting the suppliers to produce synfuel products to specifications, the potential synfuel users indicate an uncertainty regarding the adequacy of current specifications to guarantee performance and environmental acceptability. For example, severe hydrotreating may destroy or alter certain characteristics of fuels, such as lubricity, so that trade-offs in processing to remove contaminants versus preservation of performance may limit the degree to which additional processing is used. The users generally see a need for some modification of end use devices. Engines and combustors must be modified to use the synfuels efficiently and cleanly. In the utilization of both transportation and boiler fuels, emissions from combustion are likely to be the primary constraint.

In general, the suppliers expect to produce most products to specifications so that no environmental problems over and above those present in the marketing of conventional products should be encountered. Both suppliers and users indicate that in reviewing product characteristics for regulatory purposes, synfuel products must be compared with their petroleum analogs and that the relative and not the absolute impacts should be of concern. If the existing product specifications do not adequately take into account health effect concerns, the specifications should be modified or more appropriate ones should be developed.

The users and suppliers interviewed are generally involved in tests of various synfuel products for both performance and potential environmental impacts (see Appendix A). These tests are expected to determine the degree

of additional processing required and the acceptability of synfuel products. For example, Exxon Company, the developer of the EDS process, is involved in test and evaluation (including combustion and toxicology testing) of EDS products. DOE, API, and the Department of the Navy are sponsoring toxicological testing of several shale oil products. General Motor's planned synfuel evaluation testing program will begin with fuel characterization and performance assessment in a single-cylinder engine; these efforts will be followed by the evaluation of possible engine modifications for more efficient fuel utilization and full-scale multi-cylinder and actual automobile engine testing.

SECTION 5

ENVIRONMENTAL ANALYSIS OF SYNFUEL UTILIZATION AND POTENTIAL AREAS OF MAJOR ENVIRONMENTAL CONCERN

This section reviews the potential areas of environmental concern in synfuel utilization based on the data presented in Section 4 and, where data are unavailable, on estimated or anticipated characteristics of such products. The known and estimated environmental significance of product properties are then related to the product utilization scenarios developed in Sections 2 and 3, and potential environmental areas requiring more immediate attention are highlighted. In general, the environmental analysis is in "relative" rather than "absolute" terms, in that properties and use impacts of synfuel products are reviewed in comparison with those of their petroleum analogs. Because the synfuel processes are largely in the evolutionary stages and considerable efforts are underway to characterize synfuel products, the analysis and the environmental priorities identified in Section 6 should be viewed as preliminary and hence subject to revision as the processes are further refined toward commercialization and new data become available.

5.1 SIGNIFICANCE OF REPORTED SYNFUEL PRODUCTS CHARACTERISTICS

Table 47 summarizes the reported known differences in chemical, combustion, and health effect characteristics of synfuel products and their petroleum analogs, based on the data presented in Section 4. The primary differences are the synfuel product's higher content of aromatics and fuel-bound nitrogen (FBN) and greater emissions of NOx during combustion. Although no actual test data on synfuel products are currently available, high concentrations of aromatics in fuels have been shown to enhance production of PNA's during combustion. The specific substances that comprise the aromatic and the FBN fractions also determine the environmental hazards associated with products. No actual data have been reported on the composition of aromatic or FBN fractions in various synfuel products (or their petroleum counterparts). In the case of fuels, high aromaticity has been generally implicated in an increase in smoke production; the limited combustion data that are currently available, however, do not indicate higher smoke levels with all aromatic synfuels (see Tables 40, 41, and 42). High FBN content can raise the level of NOx emissions; the excess NOx emissions with synfuels are believed to be correctable by combustion modifications. The nitrogen content of the synfuels (and the high arsenic content of the crude shale oil) can also be lowered to meet appropriate fuel specifications by the use of certain refining processes (for example, hydrotreating for reduction of FBN). Another example of controlling undesirable product characteristics via

TABLE 47. REPORTED KNOWN DIFFERENCES IN CHEMICAL, COMBUSTION, AND HEALTH EFFECTS CHARACTERISTICS OF SYNFUEL PRODUCTS AND THEIR PETROLEUM ANALOGS

Product	Chemical Characteristics	Combustion Characteristics	Health Effects Characteristics
Shale oil			
Crude	Higher aromatics, FBN, AS, Hg, Mn	Higher emissions of NO_x, particulate and (possibly) certain trace elements	More mutagenic, tumorigenic, cytotoxic
Gasoline	Higher aromatics	Slightly higher NO_x and smoke emissions	—
Jet fuels	Higher aromatics	Slightly higher NO_x and smoke emissions	Eye/skin irritation, skin sensitization same as for petroleum fuel
DFM	Higher aromatics	Slightly higher NO_x and smoke emissions	Eye/skin irritation, skin sensitization same as for petroleum fuel
Residuals	Higher aromatics	—	—
Direct Liquefaction			
Syncrude (H-Coal, SRC II, EDS)	Higher aromatics and nitrogen	—	—
SRC II fuel oil	Higher aromatics and nitrogen	Higher NO_x emissions	Middle distillates: non-mutagenic; cytotoxicity similar to but toxicity greater than No.2 diesel fuel; burns skin. Heavy distillate: Considerable skin carcinogenicity, cytotoxicity, mutagenicity and cell transformation
H-Coal fuel oil	Higher nitrogen content	Higher NO_x emissions	Severely hydrotreated: non-mutagenic, non-tumorigenic; low cytotoxicity
EDS fuel oil	—	Higher NO_x emissions	—
SRC II naphtha	Higher nitrogen, aromatics	—	Non-mutagenic, extremely low tumorigenicity, cytotoxicity and fetotoxicity

(continued)

TABLE 47. (CONTINUED)

Product	Chemical Characteristics	Combustion Characteristics	Health Effects Characteristics
Direct Liquefaction, Contd.			
H-Coal naphtha	Higher nitrogen, aromatics	—	Non-mutagenic
EDS naphtha	Higher nitrogen, aromatics	—	—
SRC II gasoline	Higher aromatics	—	—
H-Coal gasoline	Higher aromatics	—	—
EDS gasoline	Higher aromatics	—	—
Indirect Liquefaction			
FT gasoline	Lower aromatics; N and S nil	—	Non-carcinogenic
FT by-product chemical	—	N/A	—
Mobile-M gasoline	(Gross characteristics similar to petroleum gasoline)	—	—
Methanol	—	Higher aldehyde emissions	Affects optic nerve
Gasification			
SNG	Traces of metal carbonyls and higher CO	—	—
Low/medium Btu gas	(Composition varies with coal type and gasifier design/ operation)	(Emissions of a wide range of trace and minor elements and heterocyclic organics)	Non-mutagenic, moderately cytotoxic
Gasifier tars, oils, phenols	(Composition varies with coal and gasifier types, highly aromatic materials)	—	—

process control (or in-plant treatment) is the elimination of traces of carbon monoxide and nickel carbonyl in SNG via proper operation of the methanator (Reference 37) or use of activated carbon adsorption.

Table 47 identifies fuel oils from coal liquefaction processes and crude shale oil as highly hazardous because of their established mutagenic, tumorigenic, and cytotoxic properties. These hazardous properties, which are characteristic of high boiling and tarry coal and petroleum materials, are caused by the presence of substances such as polycyclic aromatic hydrocarbons, hetero- and carbonyl-polycyclic compounds, aromatic amines and certain inorganics (for example, arsenic in crude shale oil) (Reference 43). The environmental concerns in the use of these substances relate primarily to the potential exposure of workers involved in handling and processing the raw products and in the management of sludges from storage tanks or spill clean-up operations. Workers' exposures can be reduced by use of protective clothing; enforcement of appropriate safety and industrial hygiene programs to reduce potential for skin contact; and proper design and operation of processing, storage, and transportation equipment to ensure adequate containment and to minimize the potential for accidental spills.

5.2 ESTIMATED/ANTICIPATED CHARACTERISTICS OF VARIOUS SYNFUEL PRODUCTS AND ASSOCIATED ENVIRONMENTAL CONCERNS

In the absence of actual data, and for use in planning and prioritizing regulatory and research and development activities, estimates have been made in this section of the characteristics of synfuel products that would be expected to be of major potential environmental consequence, based on the properties of input and starting raw materials and process engineering considerations. Based on these estimates, the potential areas of environmental concern for various anticipated uses are identified. The analysis presented in this section is based on the premise that even though in many cases the petroleum and synfuels products may present similar types of hazards, the hazard potential, or the degree of risk, could be greater for the synfuel products.

The estimated product characteristics and the analysis of the environmental consequences are summarized in Tables 48, 49, and 50 for shale oil products, coal liquefaction products, and coal gas products, respectively. (The applicable controls and regulatory considerations will be discussed in Section 5.3). The expected characteristics of environmental concern relate to the known or potential presence of toxic substances (including carcinogenic compounds associated with crude shale oil and heavy distillates from coal liquefaction and hazardous aromatics), fuel-bound nitrogen, volatile components and minor and trace elements. Potential environmental concerns for the anticipated product uses generally fall into three categories: occupational exposure, public exposure and general environmental pollution. The occupational hazards affect workers manufacturing and using the products and personnel involved in facility maintenance and product distribution services. Public exposure primarily

TABLE 48. SOURCES AND NATURE OF ENVIRONMENTAL CONCERNS IN THE UTILIZATION OF SHALE OIL PRODUCTS

Product	Major Anticipated Uses	Expected Characteristics of Potential Environmental Consequence	Potential Environmental Concern for Anticipated Uses	Applicable Controls and Regulatory Considerations
Raw Crude	Boiler fuel	Toxic substances including carcinogenic compounds associated with high boiling point organics and the inorganics; trace elements, fuel-bound nitrogen (FBN); volatile components such as lower molecular weight hydrocarbons	Exposure of workers to product during handling and transport; air, water and soil contamination as a result of spills; and leaks. Disposal of sludges from storage tanks, spill clean-ups and air/water pollution associated with combustion; disposal of combustion ashes; emissions of NO_x, trace elements and specific PNA's during combustion	Design, operation and maintenance of storage tanks, pipelines, pumps and other equipment to provide for maximum containment and minimum potential for spills and leaks. Minimize worker exposure (skin) via use of protective clothing, enforcement of appropriate industrial hygiene and operating practices; development of spill control contingency programs; employment of combustion modification to reduce air emissions; development and enforcement of appropriate emission standards; regulation of transportation, storage and disposal of sludges from storage tanks and spill clean-ups and combustion ashes and sludges
Hydrotreated Crude	Refinery feedstock	Same as for crude oil, except for significantly lower concentrations, depending on the degree of hydrotreating	Exposure of workers to product during handling and transport; air, water and soil contamination resulting from spills and leaks; disposal of sludges from storage tanks and spill clean-ups	Design, operation and maintenance of storage tanks, pipelines, pumps and other equipment to provide for maximum containment; minimize potential for spills and leaks; minimize worker exposure (skin) via use of protective clothing and enforcement of appropriate industrial hygiene and operation practices; development of spill control contingency programs; regulation of transportation, storage and disposal of sludges from storage tanks and spill clean-ups, incorporation of environmental considerations in specifications for shale oil refinery feedstocks

(continued)

TABLE 48. (CONTINUED)

Product	Major Anticipated Uses	Expected Characteristics of Potential Environmental Consequence	Potential Environmental Concern for Anticipated Uses	Applicable Controls and Regulatory Considerations
Gasoline	Motor fuel	Can be high in aromatics (depending on the refining method used) which may include toxic substances such as benzene,* PNA's and certain trace elements; volatile components such as lower molecular weight hydrocarbons	Inhalation of volatile matter by service station attendants and motorists during fuel transfer product handling; potential for air (and water) pollution resulting from spills and leaks and evaporative emissions from storage tanks; potential adverse effects of combustion products on catalytic converters (e.g., poisioning of catalyst with arsenic and excessive amounts of PNA's); disposal of sludges from spills and storage tanks and poisoned/used catalysts; emission of hazardous combustion products such as PNA's and trace elements	Proper design and operation of sources of evaporative emissions (transfer lines/equipment, storage facilities and spills/leaks); development of spill control contingency programs ; development and enforcement of appropriate emissions standards; regulation of transportation, storage and disposal of sludges from storage tanks and spill clean-ups; incorporation of environmental (including emissions) considerations in specifications for the shale-oil product
Jet fuel	Jet fuel	High aromatics; hazardous trace elements such as arsenic; volatile components such as lower molecular weight hydrocarbons	Evaporative emissions during handling, transport, storage and transfer; air, water and soil contamination resulting from spills: disposal of sludges from storage tanks and spill clean-ups; emissions of hazardous combustion products and NO_x	Same as Motor fuel

*Petroleum gasoline contains 0.3 to 3 Vol.% benzene (Reference 36)

(continued)

TABLE 48. (CONTINUED)

Product	Major Anticipated Uses	Expected Characteristics of Potential Environmental Consequence	Potential Environmental Concern for Anticipated Uses	Applicable Controls and Regulatory Considerations
DFM	Marine fuels	High aromatics can imply presence of toxic phenolics; the higher boiling point fraction and residue may contain carcinogenic organics; high content of FBN	Exposure of workers to products and some evaporative emissions during handling and transport; air, water and soil contamination resulting from spills,; disposal of sludge from storage tanks and spill clean-ups; emissions of hazardous combustion products	Same as for Jet fuels, plus minimize worker exposure via use of protective clothing, appropriate industrial hygiene and operating practices; development of spill control contingency plan
Residue	Boiler fuel	High aromatics can imply presence of toxic phenolics; being a high boiling fraction, can contain carcinogenic substances; high content of FBN and trace/minor elements	Exposure of workers to product during handling and transport; air, water and soil contamination resulting from spills; disposal of sludge from spill clean-ups and air/water pollution control sludges and ash associated with combustion; emissions of hazardous combustion products	Same as for untreated crude shale oil

TABLE 49. SOURCES AND NATURE OF ENVIRONMENTAL CONCERNS IN THE UTILIZATION OF COAL LIQUEFACTION PRODUCTS

Product	Major Anticipated Uses	Expected Characteristics of Potential Environmental Consequence	Potential Environmental Concern for Anticipated Uses	Applicable Controls and Regulatory Considerations
Coal liquids Gasoline	Engine/appliance fuel	For direct liquefaction gasoline, high contents of aromatics, nitrogen and volatile toxic substances such as benzene and toluene	Inhalation of volatile matter by service station attendants and motorists during fuel transfer and product handling; potential for air (and water) pollution resulting from spills and leaks and evaporative emissions from storage tanks; potential adverse effects of combustion products on catalytic converters; disposal of sludges from spills and storage tanks and poisoned/used catalysts; emission of hazardous combustion products	Strict regulation of design and operation of sources of evaporative emissions (transfer lines/equipment, storage facilities and spills/leaks); development of spill control contingency programs; development and enforcement of appropriate emissions standards; regulation of transportation, storage and disposal of sludges from storage tanks and spill clean-ups; incorporation of environmental (including emissions) considerations in specifications for the product
Naphtha	Petrochemical feedstocks	For direct liquefaction naphtha, high content of nitrogen and volatile aromatics, including toxic phenols and benzene	Evaporative emissions during handling, transport, storage and transfer; air, water and soil contamination resulting from spills; disposal of sludges from storage tanks and spill clean-ups	Similar to those for gasoline

(continued)

TABLE 49. (CONTINUED)

Product	Major Anticipated Uses	Expected Characteristics of Potential Environmental Consequence	Potential Environmental Concern for Anticipated Uses	Applicable Controls and Regulatory Considerations
Coal Gases				
SNG	Heating fuel for industrial, commercial and residential use; chemical feedstock	Traces of metal carbonyls, hydrogen sulfide and CO	Inhalation hazard (asphyxiation can result upon exposure to air containing high levels of major components of SNG); occupational cancer due to prolonged exposure to certain metal carbonyls	In-plant process control and treatment to minimize formation of trace contaminants (e.g., proper operation of methanator to reduce formation of nickle carbonyl); specification requirements for SNG identical to those for natural gas
LPG	Fuel for industrial/domestic heating and appliances and transportation and industrial equipment; chemical feedstock	Coal-derived impurities	Inhalation hazards; hazardous emissions from incineration of impurities	In-plant process control to minimize/eliminate product impurities; specification for requirements identical to those for petroleum LPG
Chemical Feedstocks				
Petrochemicals (ethylene, benzene, toluene, xylene, etc.)	Chemical feedstocks for a range of products including synthetic fibers, plastics, solvents, etc.	Coal-derived impurities	Depending on the specific product type/impurities and uses can present inhalation, dermal and injestion hazards to workers and public and industrial users during handling, transport and use of products; potential for air and water pollution resulting from spills and leaks and evaporative emissions from product storage tanks; disposal of sludges from spills and storage tanks	In-plant process control to minimize/eliminate product impurities; development of specifications similar to those for currently available identical products, or revised specifications which take into account potential environmental hazards; strict regulation of design and operation of sources of evaporative emissions (transfer lines, storage tanks, spills/leaks); development of spill control contingency plans; regulation of transportation, storage and disposal of hazardous sludges from storage tanks and spill clean-ups

(continued)

TABLE 49. (CONTINUED)

Product	Major Anticipated Uses	Expected Characteristics of Potential Environmental Consequence	Potential Environmental Concern for Anticipated Uses	Applicable Controls and Regulatory Considerations
Middle distillates (jet fuel, kerosene, diesel oil and heating oil)	Fuel for jet aircraft, gas turbines, diesel engines and residential/ commercial heating	High content of aromatics (in lower cuts), volatile compounds and toxic substances including potentially carcinogenic substances in the higher boiling fractions	Same as for naphtha	Same as for Jet fuels; plus (for heavier cuts) minimize worker exposure via use of protective clothing, and appropriate industrial hygiene and operating practices
Residuals (heavy fuel oil, lubricants, wax asphalts)	Industrial, utility and marine fuel; preparation of lubricants, waxes, asphalt and special oils	Toxic substances including potentially carcinogenic substances in the high fractions; high nitrogen content; volatile compounds	Exposure of workers to product during handling and transport; air, water and soil contamination as a result of spills; and leaks. Disposal of sludges from storage tanks, spill clean-ups and air/water pollution associated with combustion; disposal of combustion ashes; emissions of NO_x, trace elements and specific PNA's during combustion	Design, operation and maintenance of storage tanks, pipelines, pumps and other equipment to provide for maximum containment and minimum potential for spills and leaks. Minimize worker exposure (skin) via use of protective clothing, enforcement of appropriate industrial hygiene and operating practices; development of spill control contingency programs; employment of combustion modification to reduce air emissions; development and enforcement of appropriate emissions standards; regulation of transportation, storage and disposal of sludges from storage tanks and spill clean-ups and combustion ashes and sludges

(continued)

TABLE 49. (CONTINUED)

Product	Major Anticipated Uses	Expected Characteristics of Potential Environmental Consequence	Potential Environmental Concern for Anticipated Uses	Applicable Controls and Regulatory Considerations
By-product chemicals (aldehydes, alcohols, ketones, etc.)	Industrial uses; chemical feedstocks	Coal-derived impurities	Same as for petrochemicals	Same as for petrochemicals and other hazardous chemical manufacturing processes.

TABLE 50. SOURCES AND NATURE OF ENVIRONMENTAL CONCERNS IN THE UTILIZATION OF COAL GASES

Product	Major Anticipated Uses	Expected Characteristics of Potential Environmental Consequence	Potential Environmental Concern for Anticipated Uses	Applicable Controls and Regulatory Considerations
SNG	Heating fuel for industrial, commerical and residential use; chemical feedstock	Traces of metal carbonyls, hydrogen sulfide and CO	Inhalation hazard (asphyxiation can result upon exposure to air containing high levels of major components of SNG); occupational cancer due to prolonged exposure to certain metal carbonyls	In-plant process control and treatment to minimize formation of trace contaminants (e.g., proper operations of methanator to reduce formation of nickle carbonyl); specification requirements for SNG identical to those for natural gas
Low/medium-Btu gas	Medium-Btu gas: boiler fuel and feedstocks for chemical industry; low Btu gas: fuel for industrial furnaces and small boilers	A range of toxic contaminants, including hydrogen sulfide, carbonyl sulfide, hydrogen cyanide, metal carbomyl, ammonia and trace elements	Worker exposure hazard resulting from prolonged inhalation of contaminants; inhalation hazard due to exposure to gas or air having a high amount of gas components (e.g., asphyxiation due to CO inhalation; emission of hazardous combustion products	Design, operation and maintenance of equipment to provide for maximum containment and minimum potential for leaks and large-volume accidental discharges; minimize worker exposure via use of protective equipment and acceptable operating practices; employment of combustion modification to reduce air emissions; development and enforcement of appropriate emissions standards
Methanol	Production of gasoline; blending with motor gasoline; chemical feedstock; industrial applications	Toxicity (injestion/inhalation) and evaporative emissions, possible presence of hazardous coal-derived impurities	Exposure of workers and service station attendants and motorists (when added to gasoline) to evaporative emissions during handling, transfer and transport; air, water and soil contamination resulting from spills; disposal of sludge from storage tanks and spill clean-ups	Strict regulation of design and operation of sources of evaporative emissions (transfer lines/equipment, storage facilities and spills/leaks); development of spill control contingency programs; development and enforcement of appropriate emissions standards; regulation of transportation, storage and disposal of sludges from storage tanks and spill clean-ups, incorporation of environmental considerations in product specifications

(continued)

TABLE 50. (CONTINUED)

Product	Major Anticipated Uses	Expected Characteristics of Potential Environmental Consequence	Potential Environmental Concern for Anticipated Uses	Applicable Controls and Regulatory Considerations
Petrochemicals (ethylene, propylene, benzene toluene and xylene)	Chemical feedstocks for the production of a range of products (synthetic fibers, solvents, industrial commodities)	Coal-derived impurities	Depending on the specific product type/impurities and uses, can present inhalation, dermal and injestion hazards to workers and public and industrial users during handling, transport and use of products; potential for air and water pollution resulting from spills and leaks and evaporative emissions from product storage tanks; disposal of sludges from spills and storage tanks	In-plant process control to minimize/eliminate product impurities; development of specifications similar to those for currently available identical products, or revise specifications to take into account potential environmental hazards; strict regulation of design and operation of sources of evaporative emissions (transfer lines, storage tanks, spills/leaks); development of spill control contingency plans. regulation of transportation, storage and disposal of hazardous sludges from storage tanks and spill clean-ups
Gasifier tars, oils and phenols	On-site combustion; purification and sale for industrial uses and chemical feedstocks	Highly toxic aromatics, including benzene and phenols; potentially carcinogenic substances in tars/oils	Emission of hazardous combustion products (when burned on-site); exposure of workers during handling and transport; potential air and water pollution resulting from spills and leaks and evaporative emissions from product storage tanks; disposal of sludges from product storage tanks and spill clean-ups	Development and enforcement of appropriate standards for combustion of by-products; strict regulation of design and operation of sources of evaporative emissions (transfer lines, storage tanks, spills/leaks); development of spill control continengency plans; minimize worker exposure via requirement for use of protective clothing, enforcement of appropriate industrial hygiene and operating practices; development of spill control contingency programs; regulation of transportation, storage and disposal of sludges from storage tanks and spill clean-ups and combustion ashes and sludges

relates to air pollution resulting from product uses such as gasoline in automobiles (for example, motorists at service stations), and hazardous fugitive emissions from storage tanks, product transfer points, leaks/spills, and product uses (for example, products produced from petrochemicals). Accidental spills and activities related to the management of sludges from product storage tanks and spill clean-ups, and solid, liquid and gaseous wastes associated with combustion and combustion-related air pollution control would all contribute to general environmental pollution.

5.3 APPLICABLE CONTROLS AND REGULATORY CONSIDERATIONS

5.3.1 Applicable Controls and Mitigation Measures

Tables 48, 49, and 50 summarize some of the control measures and regulatory considerations for the mitigation of the major environmental concerns identified for various anticipated uses of synfuel products. The occupational exposure to synfuel products could be minimized through development and enforcement of OSHA-type regulations that would lead to the proper design, operation, and maintenance of product storage tanks, pipelines, pumps, and other equipment to provide for maximum containment and, hence reduced evaporative emissions and minimum potential for spills and leaks. Workplace-related controls could also include requirements for use of protective clothing, adherence to strict industrial hygiene and operating practices, and development of spill control contingency plans.

The risk of public exposure can be reduced by developing and enforcing (1) product specifications that take into account the potential direct or indirect (for example, via emissions of hazardous combustion products) health hazards to users; (2) emissions standards for stationary and mobile combustion sources using synfuel products; and (3) requirements for installing appropriate equipment or devices that would reduce emissions during product transfer (for example, use of vapor recovery systems on gasoline service station pumps/lines). The potential for contamination stemming from waste disposal and spill control activities can be minimized by developing and enforcing regulations for proper storage, transportation, and disposal of synfuel product wastes that would significantly threaten the environment and public if they were improperly managed.

Only some of these environmental concerns and regulatory considerations are covered under existing or proposed environmental regulations. For the remaining areas of concern, new legislations and regulations would be required. A review of some of the provisions of the existing federal regulations relevant to the environmental issues associated with synfuel product utilization is presented in the following section. State regulations and local ordinances are too numerous and are not covered here.

5.3.2 Significant Relevant Statutes and Regulations

Six major federal environmental statues that would have bearings on some of the environmental concerns discussed here are the Occupational Safety and Health Act (OSHA); Toxic Substances Control Act (TSCA); Clean Air Act (CAA); Resource Conservation and Recovery Act (RCRA); Clean Water Act; and the Comprehensive Environmental Response, Compensation, and Liability Act (Superfund legislation).

Toxic Substances Control Act (TSCA)

The Toxic Substances Control Act authorizes EPA to promulgate regulations for the control of substances or mixtures of substances that, in EPA's judgment, present an unreasonable risk to health and to the environment through their manufacture, processing, and distribution in commerce, use, or disposal. Such regulations may prohibit the manufacture, processing, etc., of certain substances and impose restrictions on others. The Act also directs EPA to issue regulations for testing, premarket notification, and reporting and retention of information. Under Section 4 of TSCA, EPA is empowered to require developers to develop adequate data with respect to the effects of their products on health or the environment. Where an industry such as the synfuel industry has not developed sufficient data and where EPA finds that unreasonable risks may occur, TSCA grants the authority to require that testing be performed.

Under TSCA, premanufacture notices (PMN's) must be submitted on chemicals not listed in a Chemical Substance Inventory. Many synfuel substances are not included in the Inventory and therefore require a PMN. Other synfuel products (for example, methanol) are present in the TSCA Inventory, but unless EPA operates on the premise that synfuel products are inherently different from their existing commercial counterparts and represent new products/uses, a PMN may be required. A PMN, which must be submitted to EPA at least 90 days before beginning commencement of manufacture for commercial purposes, requires the following data:

1) Chemical composition of the products

2) Details on mode of use

3) The projected production volume

4) A characterization of the by-products and emissions resulting from the manufacturing process and characterization of the product of combustion during its intended use

5) Characterization of human exposure during the manufacturing process and use of the products

6) Method by which manufacturing and processing wastes are disposed of.

If EPA determines that sufficient data have not been submitted to make a reasonable assessment of the risks posed by a synfuel product and believes that the product may present an unreasonable risk to man or to the environment, it could restrict the manufacture or use of the product.

The authority of TSCA extends to products/by-products of the synfuel industry that are on the Inventory or that have already passed through a PMN process if EPA determines, on the basis of new data, that additional data reporting and testing are required. At the present time, synfuel producers are being requested to contact the Office of Toxic Substances within EPA to determine whether their products are on the TSCA Inventory or will require a PMN. EPA's approach to the regulation of synfuel products under TSCA is still being formulated.

Clean Air Act (CAA)

The Clean Air Act provides the EPA the authority to regulate new and existing sources of air pollution in order to attain and maintain levels of air quality that will protect public health and welfare. To date, most existing and planned air quality regulations developed under the CAA focus on criteria pollutants (that is, SO_x, NO_x, CO, particulate matter) in ambient air. Criteria pollutants associated with synfuel utilization are expected to be emitted from fuel transportation, storage, and combustion in utility and industrial boilers, residential/commercial furnaces, gas turbines and various mobile sources. Current New Source Performance Standards (NSPS) for fossil-fuel-fired power plants contain special standards for facilities using certain synfuels.

At the present time, regulations are planned that will set standards for industrial boilers and stationary internal combustion engines; currently no emissions standards for commercial and residential boilers and heaters exist. There are also no emissions standards for the transportation and handling of either petroleum or synfuel products from production and refining sites to end-use locations. However, New Source Performance Standards (NSPS) were recently promulgated on petroleum storage, and they include storage requirements for synfuels. NSPS's are also planned for volatile organic carbon (VOC) emissions from gasoline bulk terminal loading facilities, including tank trucks.

Resource Conservation and Recovery Act (RCRA)

Under RCRA, EPA has broad authority for the identification and regulation of the handling, transportation, and disposal of hazardous wastes. Wastes currently listed as hazardous under RCRA from both specific and non-specific sources do not include synfuel products/by-products per se. However, certain chemical products and manufacturing chemical intermediates listed as toxic materials in RCRA paragraph 261.33f (May 19, 1980 Federal Register) may be present in certain synfuel products (for example, benzo(a)anthracene). Disposal of spills of these products would be subject to RCRA jurisdiction if quantities exceeded 1,000 kg. Certain additional commercial products and manufacturing chemical intermediates

listed as toxic materials in RCRA paragraph 261.33e (for example, nickel carbonyl) may also be present in synfuel products (for example, SNG). Disposal of spills of these products would come under RCRA regulation if quantities exceeded 50 kg.

Wastes from the combustion of synfuels have not been regulated. RCRA currently exempts as "special wastes" fly ash and other products generated primarily from the combustion of coal or other fossil fuels. Synfuel sludges (for example, those resulting from product storage) are not listed as hazardous wastes under RCRA but must be evaluated for possible listing. Waste packing, sealings, oil, and various residues that may be generated during synfuel utilization may become identified as hazardous wastes under RCRA and come under subsequent regulation as further information is obtained on the characteristics of these wastes. Management of specific wastes under RCRA is an evolving process, and it would be very timely to bring to the attention of EPA's Office of Solid Waste some of the environmental concern associated with synfuel wastes.

Clean Water Act (CWA)

The Clean Water Act provides EPA with authority to regulate point source discharges of pollutants and spills of oil and hazardous materials in order to protect the quality of navigable waters. The Act directs the EPA to promulgate and enforce national standards of performance for all new sources and pretreatment standards for industrial discharges into publicly owned treatment plants and to control discharges of toxic substances. To date, no NSPS standards have been promulgated for the synfuel industry, although the Effluent Guidelines Division of EPA is currently involved in major studies to develop background data for regulation of the energy industry. Section 402 of the FWPCA, National Pollutant Discharge Elimination System (NPDES), authorizes an EPA- or state-administered permit system for discharges into navigable waters. The permit for a point source discharge specifies the materials and quantities to be discharged, discharge conditions, and the monitoring and reporting systems to be used. Many pollutants (for example, phenolic compounds) currently regulated under effluent guidelines for other industries are present in synfuel products/ by-products and wastes. It is anticipated that these will be regulated via NPDES permits for individual facilities producing and using synfuel products.

Under the CWA, several spill control regulations apply to the storage of certain synfuel materials. However, these regulations are not complete and there are still several regulatory unknowns concerning the transport of synfuel products over or near waterways.

Occupational Safety and Health Act (OSHA)

This act authorizes the U.S. Department of Labor (DOL) to set mandatory standards to safeguard the occupational safety and health of all employers and employees of businesses engaged in interstate commerce. Among the standards promulgated to date under OSHA are those pertaining to

worker exposure to toxic and hazardous air contaminants, many of which are identified as potential constituents of SNG and by-products. Table 51 lists OSHA standards for some of the materials that are known or expected to be present in SNG and coal gasification by-products. Such products and by-products may subject plants providing and using coal-derived SNG and by-products to OSHA regulations. The presence of the substances shown in Table 51 in the ambient environment in such facilities may result from fugitive or evaporative emissions from various production, transportation, and storage units; from accidental spills; or from equipment or system failure. For many of these substances, OSHA standards are not expected to be exceeded under normal operating conditions primarily because of the closed nature of many of the facilities producing and using SNG and coal gasification by-products. For some highly volatile substances such as benzene, evaporative emissions must be controlled in order to comply with the ambient standards.

Under the authority of OSHA, regulations have been promulgated relating to exposure to some 17 occupational carcinogens. Although some of the regulated carcinogens (for example, benzidine and naphthylamines) are expected to be present in SNG tars and oils, it is not envisioned that their concentrations would exceed those levels that would make the by-products subject to OSHA regulations. The National Institute of Occupational Safety and Health (NIOSH) has published a list of suspected carcinogens covering some 1500 chemical substances. Some of these substances would be present in SNG product/by-products and are subject to future regulations by OSHA.

The existing OSHA ambient regulations cover the majority of substances that are known to be present in SNG products and by-products. As better and more detailed composition data become available for such materials and for materials from other synfuels processes, it is possible that additional OSHA regulations may be developed covering toxic substances not yet identified in SNG and other synfuel products and by-products.

To date, OSHA regulations affecting synfuels have been directed at specific compounds. Safety regulations based on OSHA can also be aimed at an entire industry, but such regulation is not anticipated for synfuels. At the present time, OSHA does not have any on-going work dealing with synfuels (Reference 44). However, NIOSH is interested in synfuels. Concern over possible hazards caused by synfuel production (Reference 45) and use was indicated in a recent journal article by several OSHA personnel. Comparison with analogous fuels was the basis for speculation on the hazards of synfuels. Regulation and control of identified hazardous chemicals was advocated.

Comprehensive Environmental Response, Compensation, and Liability Act (Superfund Legislation)

The superfund legislation, recently signed into law, authorizes federal action to contain and clean up spills and other releases of hazardous substances, as well as abandoned disposal sites. Under the

TABLE 51. OSHA STANDARDS FOR MATERIALS KNOWN OR SUSPECTED TO BE PRESENT IN LURGI SNG PLANTS (37)

Compound	TWA,* ppm	TWA,* mg/m^3	Acceptable Ceiling Concentration	Where Found
Acetic acid	10	25	--	Gas stream, gas liquor
Ammonia	50	35	50	Gas stream, gas liquor
Aniline (skin)	5	19	--	
Antimony	--	0.5	--	Trace element in coal
Arsenic	--	0.5	(.002 mg/m^3)	Trace element in coal
Benzene	10(1)		25 ppm	Gas stream, naphtha
Beryllium	--	0.002 (0.002)	005 mg/m^3	Trace element in coal
Butyl mercaptan	10	35	--	Gas stream, naphtha
Cadmium (dust)	--	0.2 (04)	0.6 mg/m^3 (0.2 mg/m^3)	Trace element in coal
Carbon dioxide	5000 (10,000)	9000 (18,000)	(30,000 ppm)	Gas stream
Carbon disulfide	20(1)	--	30 ppm (10 ppm)	Gas stream
Carbon monoxide	50(35)	55	(200 ppm)	Gas stream, product SNG
Carbon tetrachloride	10	1	25 ppm	Laboratory
Chromium, soluble salts	--	0 5 (0 025)	(0.05 mg/m^3)	
Chromium, insoluble salts	--	1	--	Trace element in coal
Coal dust (<5% SiO_2)	--	2.4	--	Coal preparation areas
(>5% SiO_2)	--	0.10	--	
Coal tar pitch volatiles†	--	0.2	--	Gas stream, tars, oils
Cresol (skin)	5	22	--	Gas stream, naphtha
Ethyl benzene	100	35	--	Gas stream, naptha
Ethyl mercaptan	--	435	10 ppm	Gas stream, naphtha
Hydrogen chloride	--	--	5 ppm	Stream
Hydrogen sulfide	--	--	20 ppm (10 ppm)	Gas stream
Hydrogen cyanide	10	--	25 ppm	Gas stream
Lead and inorganic lead compounds	--	0.2 (0.10)	--	Trace element in coal
Manganese	--	--	5 mg/m^3	Trace element in coal
Mercury	--	0.1 (0.05)	--	Trace element in coal
Methanol	200 (200)	260		Rectisol solvent
Methyl mercaptan	--	--	10 ppm	Gas stream
Naphtha (coal tar)	100	400		Gas stream, tars, oils
Naphthalene	10	50	--	Gas stream, tars, oils
Nickel carbonyl	0.001	0.07		Methanation areas, product SNG
Nickel metal and soluble compounds (as Ni)	--	1		Trace element in coal
Nitrogen dioxide	5(1)	9	--	Incinerated wastes, boiler flue gases
Phenol (skin)	5	19 (20)	(60 mg/m^3)	Gas and gas liquor
Propane	1000	1800	--	Gas stream
Pyridine	5	15	--	Gas stream, tars, oils
Selenium compounds	--	0.2	--	Trace element in coal
Silica (respirable)	--	0.10 (0.05)		
(total dust)	--	0.30	--	
Styrene	100	--	--	
Sulfur dioxide	5(2)	13	--	Incinerated wastes, boiler flue gases
Toluene	200 (100)	--	--	Gas stream tars, oils
Vanadium	--	(1)	(0.05 mg/m^3)	Trace element in coal
Xylene	100 (100)	435	--	Gas stream, tars, oils

*Time-weighted average. Numbers in parentheses indicate NIOSH recommended standards

†Coal tar pitch volatiles, as measured by the benzene-soluble fraction of particulate matter, includes such polycyclic aromatic hydrocarbons as anthracene, benzo(a)pyrene, phenanthrene, acridine, chrysene, and pyrene.

mandate of the superfund legislation, liability can be imposed on the generators of the hazardous substances to compensate for cleanup expenses and damage to persons or property. Additional interpretations and ramifications of the superfund legislation are expected as the Act is implemented. Spills of synfuel products/by-products that are considered hazardous would be subject to superfund mandates.

5.4 ENVIRONMENTAL IMPACTS ASSOCIATED WITH VARIOUS PRODUCTION AND USE SCENARIOS AND REGIONAL CONSIDERATIONS

As will be discussed in Section 6, for near-term regulatory planning purposes certain shale oil products, medium-Btu gas, and coal liquids have been identified as presenting greater environmental concern. Figures 17 through 23 present the quantities and utilization patterns for shale oil, low-/medium-Btu gas, and direct and indirect liquefaction products, based on the data summarized in Section 3.3.5. Similar diagrams can be developed for other scenarios. As noted in these figures, except for oil shale in the 1988-1992 and 1993-2000 time frames (Figure 18) and direct coal liquefaction in the 1993-2000 time period (Figure 23), the transportation, distribution, and use of products are expected to be confined to the region(s) where each synfuel is produced. This implies that the environmental impacts associated with product utilization are expected to be confined primarily to the production regions, except for impacts associated with the natural transport of pollutants across regional boundaries (for example, transport of air pollutants emitted from combustion sources). The projections shown in Figures 17 through 23 indicate that up to the year 2000 under Scenario II the environmental impacts of synfuel product utilization would be expected to be largely limited to EPA Regions V and VIII for oil shale (Figures 17 and 18), to EPA Regions IV, VI, and VIII for medium-Btu gas (Figure 19), to EPA Regions III, IV, and VIII for indirect coal liquefaction products (Figures 20 and 21) and to EPA Regions III, IV, and V, for direct liquefaction products (Figures 22 and 23).

A detailed discussion of the projected synfuel production, distribution, and utilization patterns and their regional environmental impacts are presented in the following paragraphs, using shale oil and low-/medium-Btu gas (Figures 17 through 19) as examples.

5.4.1 Shale Oil Products

Figure 17 presents the estimated quantities and utilization pattern for the shale oil products under Scenario II and the 1980-1987 time frame. As noted in the figure, an estimated 77,000 BPD of shale oil will be produced (in EPA Region VIII); the shale oil will be hydrotreated and refined into middle distillates (57,000 BPD), gasoline (13,000 BPD), and residuals (7,000 BPD) which will be used by various commercial, residential, and industrial establishments for heating and transportation

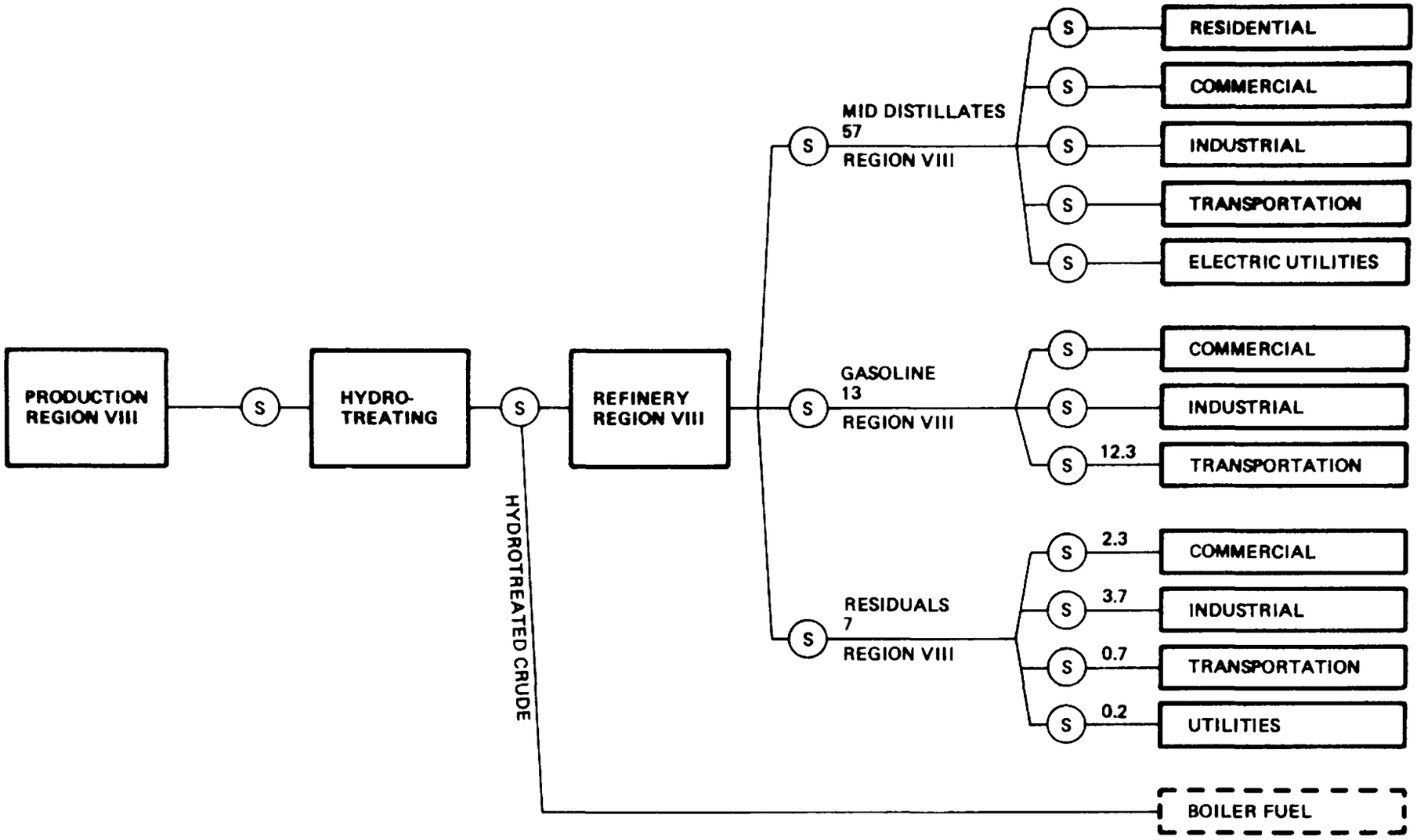

FIGURE 17. Estimated Utilization Pattern For Shale Oil Products; Scenario II, 1980-1987 Time Period (Amounts Shown Are 10^3 BPD Oil Equivalent; S Designates Storage)

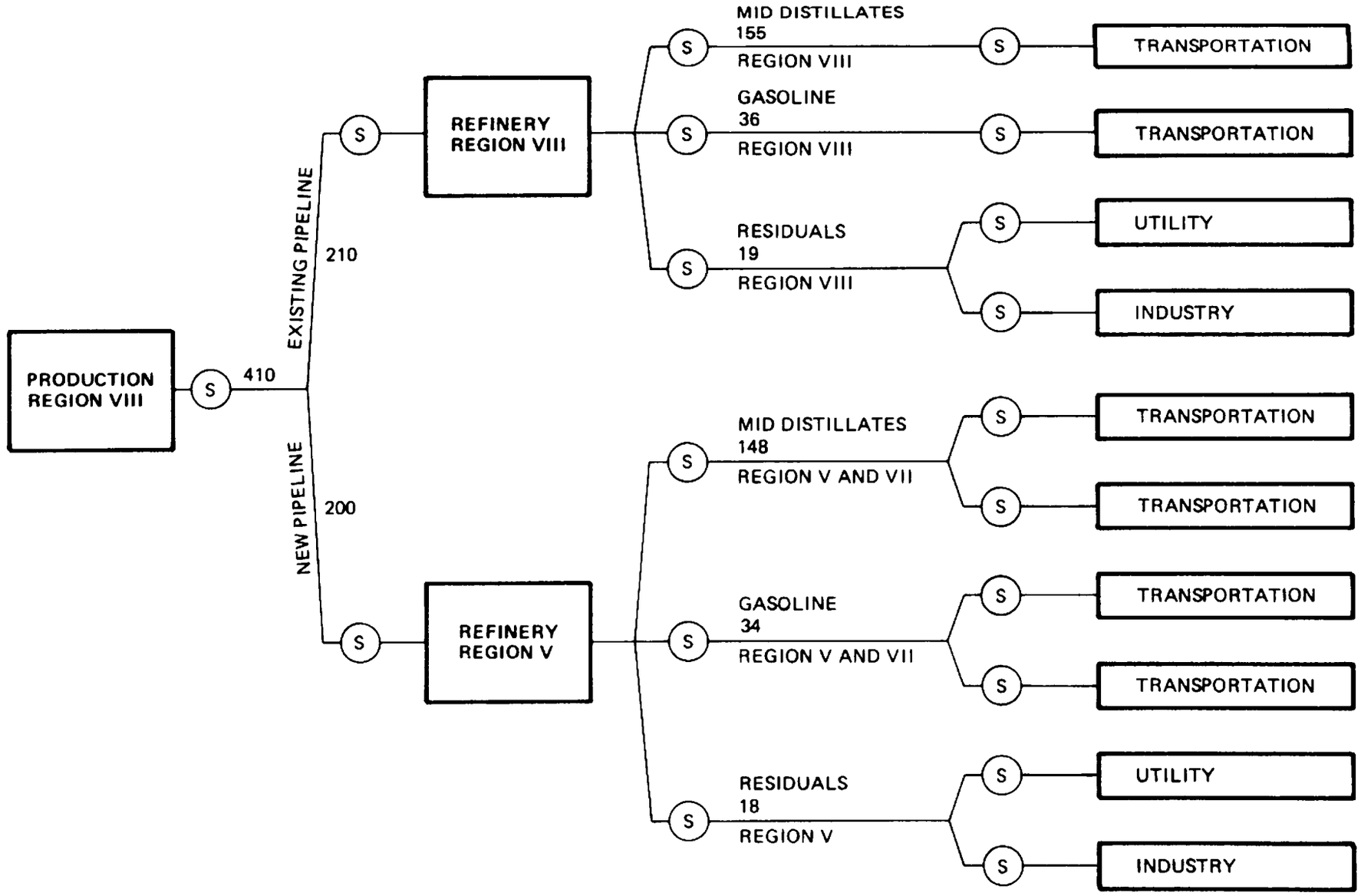

FIGURE 18. Estimated Utilization Pattern For Shale Oil Products; Scenario II, 1988-1992 and 1993-2000 Time Periods (Amounts Shown Are 10^3 BPD Oil Equivalent; S Designates Storage)

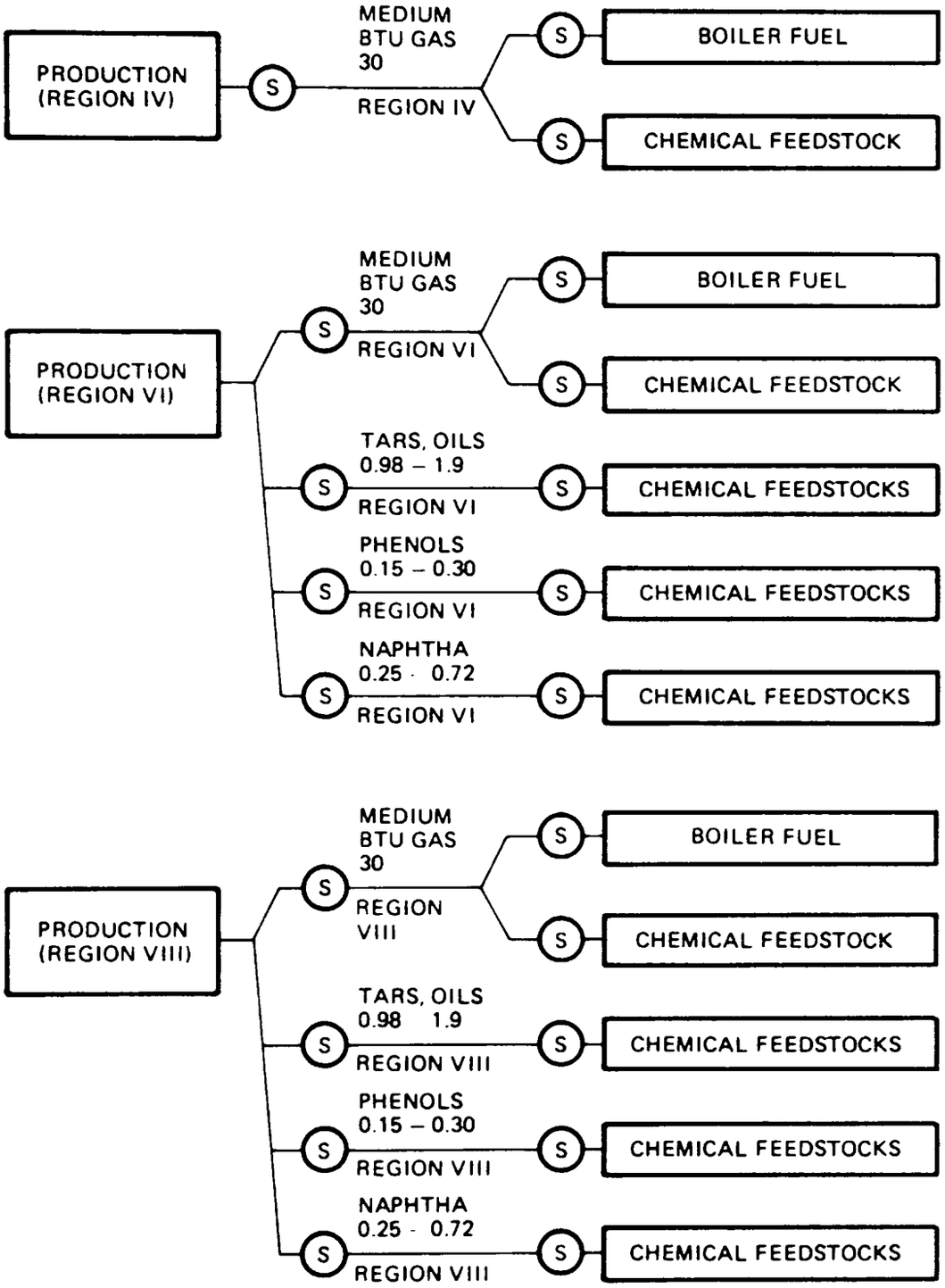

Figure 19. Estimated Utilization Pattern for Low-/Medium-Btu Coal Gas: Senario II, Period 1980-1987; Production and Utilization Patterns for the 1988-1992 and 1993-2000 Are the Same As Shown Here But Production Quantities Differ (Amounts Shown Are 10^3 BPD Oil Equivalent; S Designates Storage)

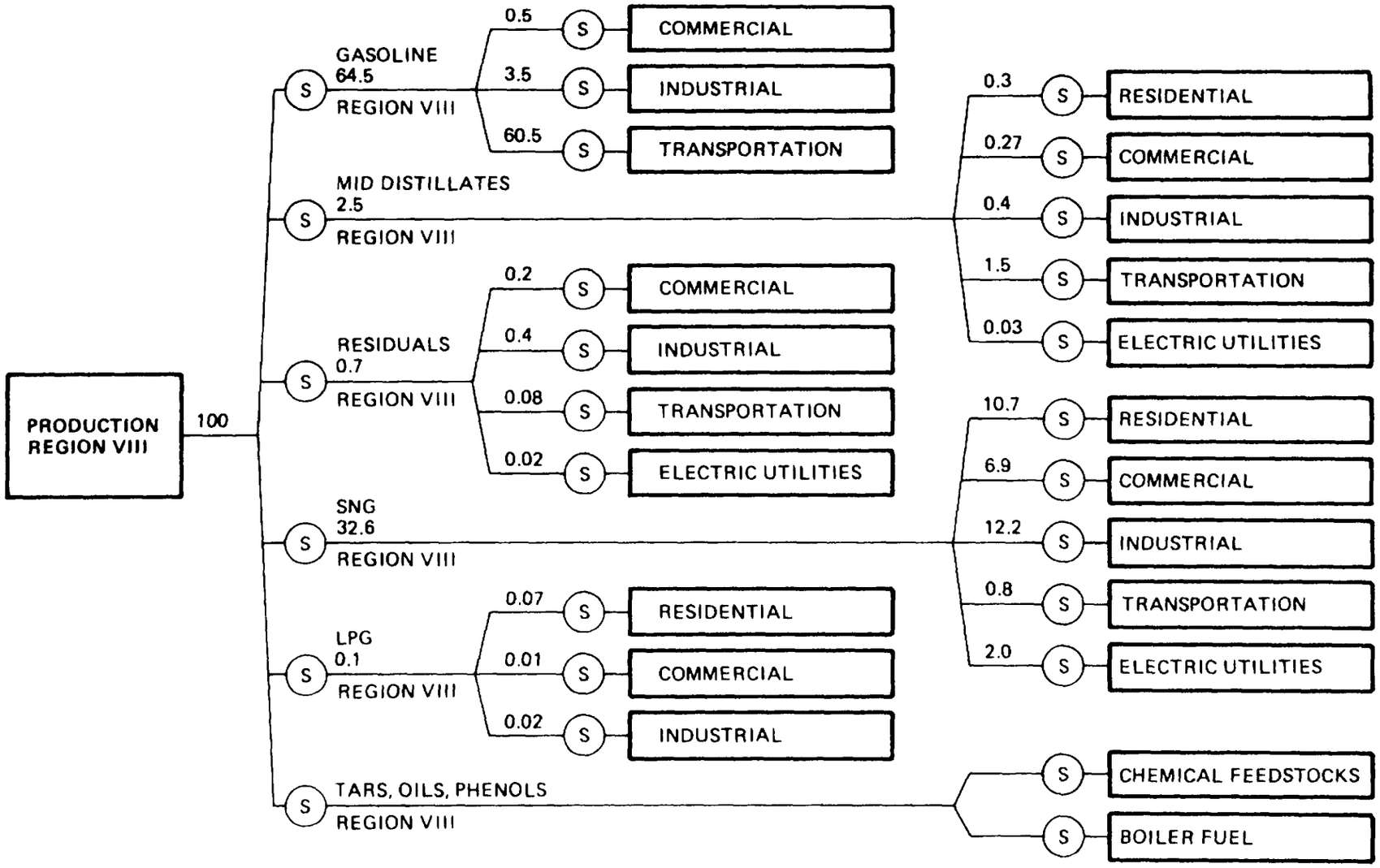

FIGURE 20. Estimated Utilization Pattern For Indirect Coal Liquefaction Products; Scenario II, 1988-1993 (Amounts Shown Are 10^3 BPD Oil Equivalent; S Designates Storage)

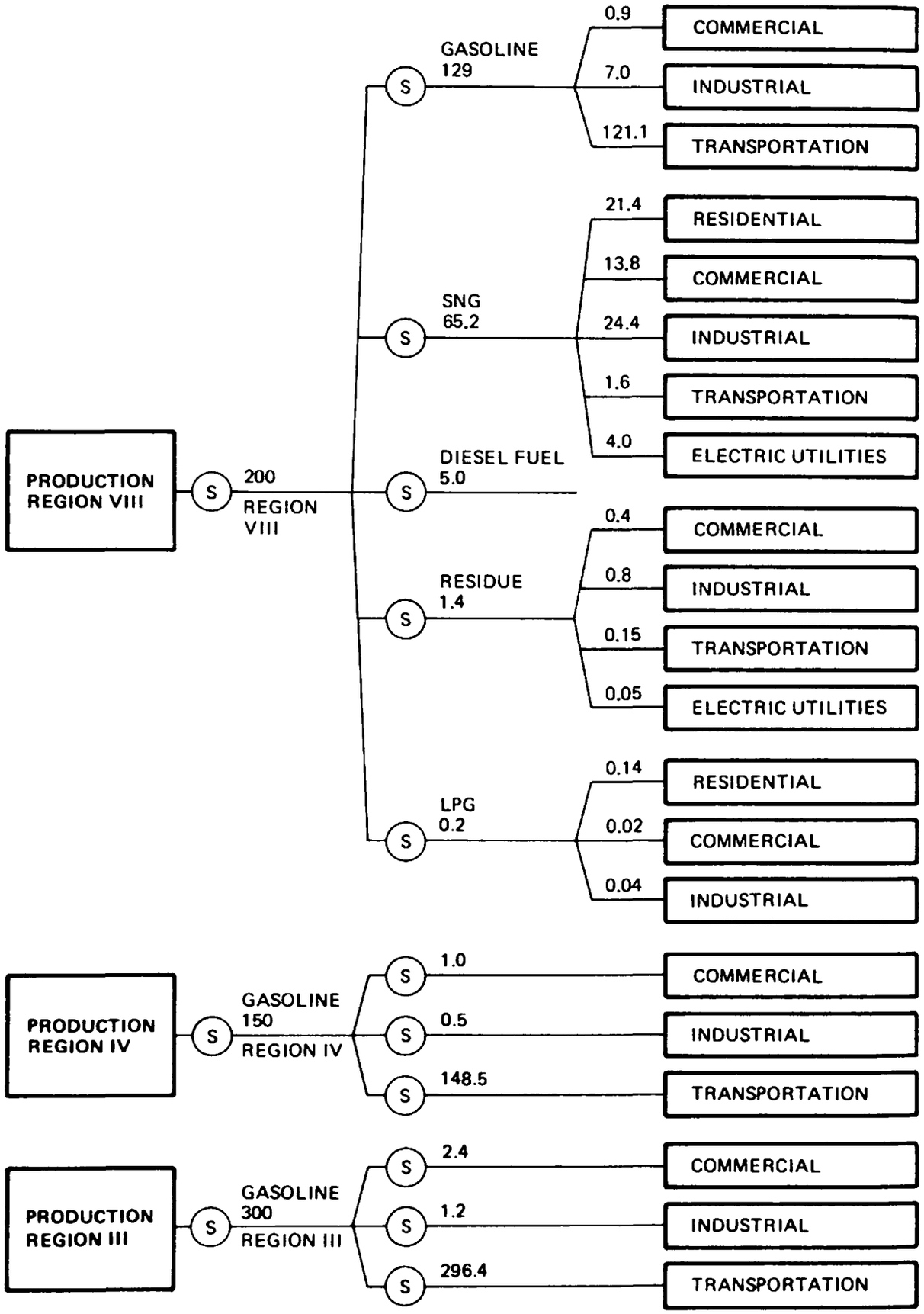

Figure 21. Estimated Utilization Pattern for Indirect coal Liquefaction Products; Scenario II, 1993-2000 (Amounts Shown Are 20^3 BPD Oil Equivalent; S Designates Storage)

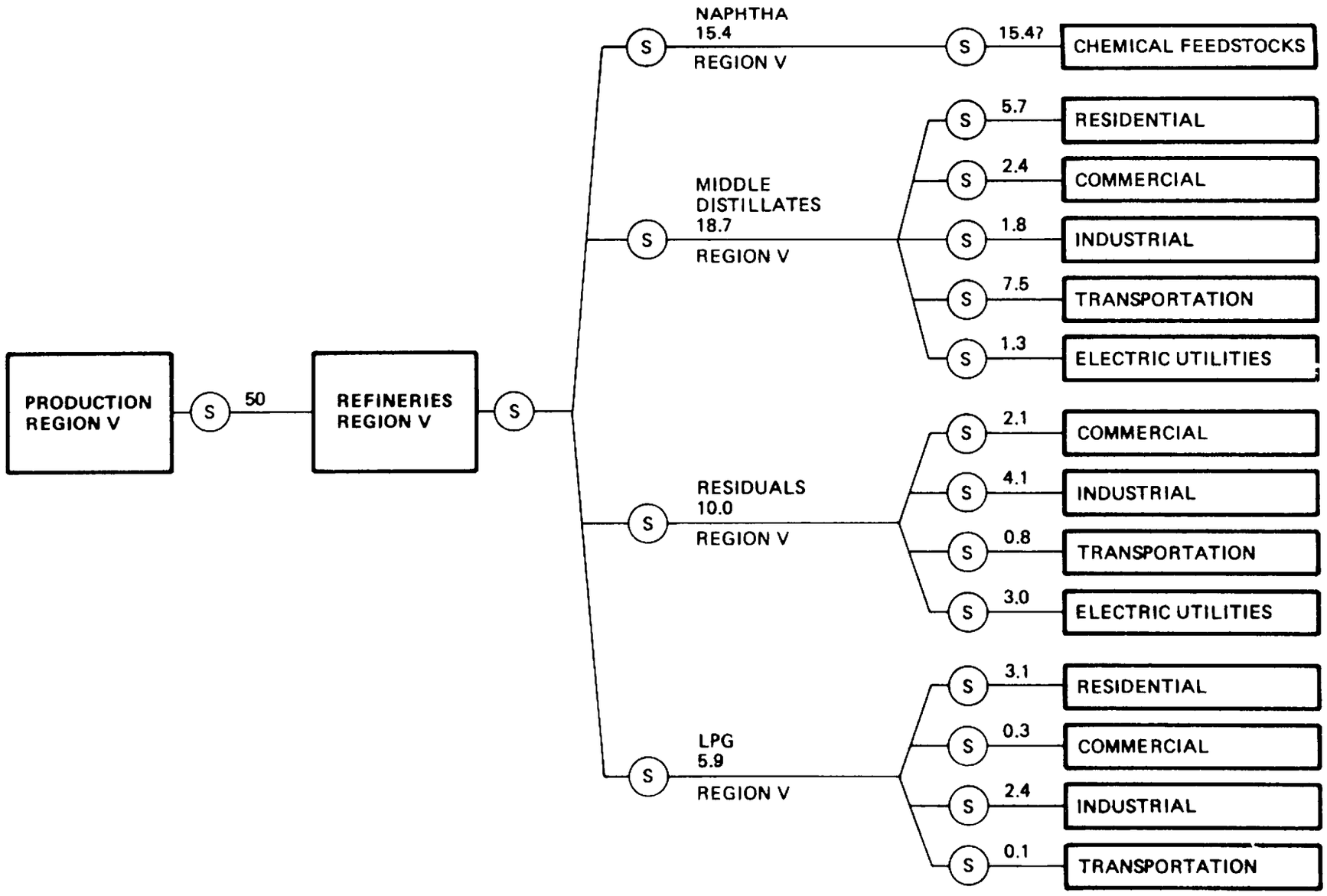

FIGURE 22. Estimated Utilization Pattern For Direct Coal Liquefaction Products; Scenario II, 1988-1992 Time Period (Amounts Shown Are 10^3 BPD Oil Equivalents; S Designates Storage)

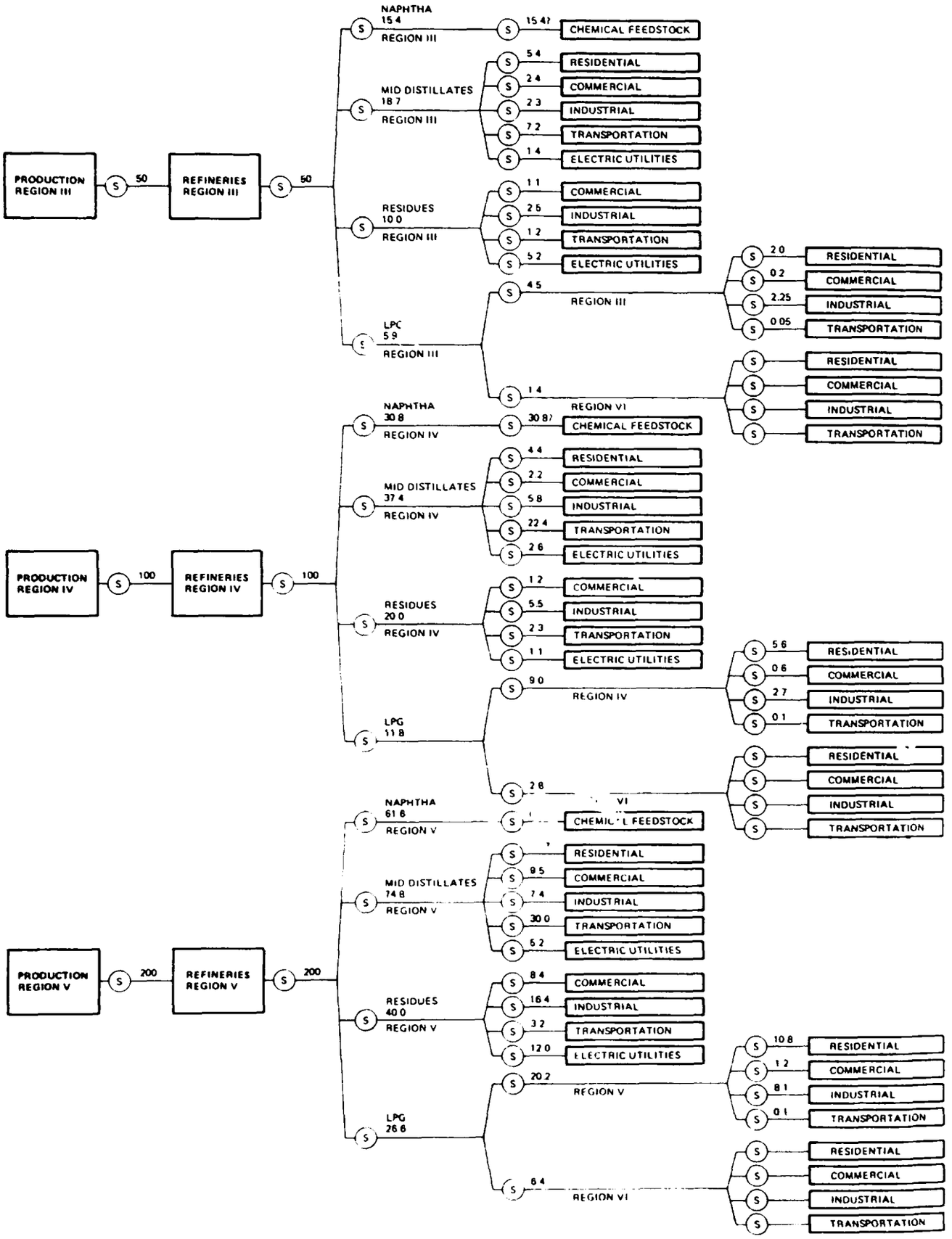

FIGURE 23. Estimated Utilization Pattern For Direct Coal Liquefaction Products; Scenario II, 1993-2000 Time Period (Amounts Shown Are 10^3 BPD Oil Equivalent; S Designates Storage)

purposes.* The estimated crude shale oil production rates under Scenarios I and III for the 1980-1987 time frame will be 219,000 BPD and 340,000 BPD, respectively. Except for higher quantities of the products, the relative amounts of the products for Scenarios I and III are expected to remain the same as those shown in Figure 17 for Scenario II. In the 1980-1987 time frame for all three scenarios, the production, transportation, refining, distribution, and uses of shale oil products, and hence the associated environmental impacts, are expected to be almost totally confined to EPA Region VIII.

Information similar to that shown in Figure 17 for the 1980-1987 time period is presented in Figure 18 for the 1988-2000 time frame. For Scenario II during this time frame, an estimated 410,000 BPD of shale oil will be produced and hydrotreated in EPA Region VIII; the hydrotreated product will be transported by pipelines to refineries in Regions VIII and V and refined into gasoline, middle distillate, and residuals. It is anticipated that direct use of hydrotreated shale oil as boiler fuel would be insignificant during this time frame.

Except for some of the products refined in Region V that would be shipped to users in Regions VII (for example, gasoline and middle distillates), for all practical purposes the distribution and use of refined shale oil products, and hence the environmental impacts associated with such refining, distribution, and use, are expected to be largely confined to Regions VIII and V. Except for higher production levels and product quantities for Scenarios I and III (437,000 BPD and 750,000 BPD of crude, respectively), the refining and use patterns shown in Figure 18 are also applicable to production Scenarios I and III.

The hydrotreated shale oil would be transported from production sites to refineries through pipelines. Depending on the relative location and capacity of the existing pipelines feeding refineries, these same pipelines or new, dedicated pipelines will be used to transport hydrotreated shale oils. The use of existing pipelines would most likely involve some degree of blending of shale oil and petroleum crude. At present, it is very difficult to forecast which specific refineries will receive the hydrotreated shale oil and what fraction of each refinery's total feedstock will be comprised of hydrotreated shale oil. Within a refinery, considerable blending of various shale oil and petroleum intermediate and process streams would be expected to take place and the final products which will be produced to specifications (aromaticity, viscosity, volatility, etc.) are expected to be composites of shale oil and petroleum products and to contain varying fractions of shale oil-derived material.

---

*Some shale oil developers have indicated that at least some hydrotreated shale oil may be initially used directly as boiler fuel if the transportation links are not in place to carry the hydrotreated shale oil to refineries.

The total, overall contributions of shale oil to various products used in EPA Region VIII (the region of maximum use under Scenario II) are presented in Table 52 for 1980-1987 and 1988-2000 time periods. As noted in the table, the shale oil would account for a substantial percentage of the total feed to refineries in Region VIII (13.3 and 35.6 for the 1980-1987 and 1988-2000 time frames, respectively) and hence would be expected to have significant impacts on the refinery operations and product characteristics. Most of the shale oil is expected to be refined into middle distillates (jet and diesel fuel) and gasoline with associated production of some residuals. The middle distillate from shale oil would account for a significant fraction of such distillates used in EPA Region VIII. Based on the data presented previously on the environmentally significant characteristics of shale oil products and the anticipated refining and use pattern depicted in Figure 17 and Table 52, major areas of environmental concern in Region VIII would relate to: (a) occupational hazards in processing, transporting, and sale of shale oil middle distillate, gasoline, and residuals derived from shale oil; (b) public exposure caused by air pollution generated from the combustion of middle distillates, gasoline, and residuals; evaporative emissions from product storage tanks; and inhalation hazard to motorists at gasoline service stations; and (c) environmental hazards associated with accidental spills (for example, rupture of pipelines carrying products) and disposal of waste from refineries, product storage tanks, spill clean-ups, and pollution control systems used in conjunction with steam and power generation plants. The mitigation measures applicable to the control of these anticipated hazards were reviewed in Section 5.3.

5.4.2 Low-/Medium-Btu Coal Gas Products

The estimated quantities and utilization pattern for the low-/medium-Btu gas products are presented in Figure 19 for Scenario II and the 1980-1987 time period. Except for different levels of production, the products and the utilization pattern shown in Figure 19 also apply to the other scenarios and time frames.

Low-/medium-Btu coal gas is expected to be produced in EPA Regions IV, VI, and VIII. Because it is not economical to transport medium-Btu gas over distances greater than 200 miles (see Section 3.2.1), it is anticipated that the products will be used in these same regions. Because of its lower Btu content, the economics of transporting low-Btu gas are even more unfavorable. Thus, it is expected that low-Btu gas will also be used in the region where it is produced. Some low-Btu plants will probably be located at the same site as the product user.

The gasifiers built in Regions VI and VIII are expected to use the commercially available Lurgi technology, which generates relatively small quantities of by-product tars, oils, phenols, and naphtha. The gasifiers built in Region IV are expected to use the Texaco partial oxidation technology, which is compatible with Eastern caking coals and does not generate the by-product tars, oils, and phenols.

TABLE 52. QUANTITY OF VARIOUS SHALE OIL PRODUCTS IN RELATION TO PETROLEUM ANALOGS IN THE EPA REGION OF MAXIMUM SHALE OIL PRODUCT USE AND ON A NATIONAL BASIS FOR SCENARIO II

	1980 – 1987			1988 – 1992 and 1993 – 2000		
Product	Total amount of product MM B/D	% of total product in region of max use	% of total product in U.S.	Total amount of product used	% of total product in region of max use	% of total product in U.S.
Crude shale oil (fuel)	0.0008	1.3	0.45	–	–	–
Shale oil refinery feed	0.07	13.3	0.45	0.41	35.6	2.4
Middle distillate	0.057	37.6	0.75	0.32	48.3	7.0
Gasoline	0.013	4.8	0.2	0.07	2.3	0.9
Residuals	0.007	15.6	0.2	0.04	6.6	1.3

As discussed in Section 3.2.1, transportation of low-/medium-Btu gas would require a dedicated pipeline. Once delivered, it is suitable for use as either boiler fuel or as a chemical feedstock, for example, in the production of ammonia or methanol. Large chemical, petroleum, or steel plants may require enough fuel at a single plant to economically justify the dedication of an entire gasification plant. Another possibility is the development of industrial parks centered around a gasification facility. The extent to which medium-Btu gas will be used as chemical feedstock rather than boiler fuel will be determined largely by economic considerations, and one factor could be the extent to which additional emissions control equipment will be required for boilers using low-/medium-Btu gas.

The use of the Lurgi gasifier by-products is also uncertain. Because of their high heating value and because the toxic hazards posed by their distribution in commerce are not known, it is anticipated that these products will initially be used at the production site as boiler fuel. Eventually, markets for these substances may be developed, most probably as chemical feedstocks. The quantities of Lurgi by-products generated are highly coal-specific and thus are shown as a range in the diagram.

Based on the data presented previously on the environmentally significant characteristics of low-medium-Btu gas products, the areas of concern in EPA Regions VIII, VI, and IV would primarily relate to: (a) occupational health and safety hazards in processing, transporting, and use of products; (b) public exposure to air pollutants generated during combustion of gas and by-products; and (c) environmental hazards resulting from accidental spills (for example, rupture of pipelines), and disposal of waste from production facilities, product storage tanks, spill clean-ups, and systems used for pollution control.

SECTION 6

PRIORITY RANKING OF SYNFUEL PRODUCTS FROM THE STANDPOINT OF ENVIRONMENTAL CONCERNS

As was noted in Section 1, the primary objective of the synfuel utilization study was to identify and examine the major environmental concerns relating to synfuels utilization and to rank the synfuel products (or groups of such products) from the standpoint of environmental concerns and mitigation requirements. The study is to provide input to the EPA effort for: (a) assessing the environmental implications of a mature synfuels industry and of large-scale utilization of synfuels products, and (b) planning and prioritizing regulatory and research and development programs. The anticipated industry development, product utilization patterns, and environmental concerns associated with synfuel products were presented in previous sections. The objective of this section is to rank the synfuel products from the standpoint of environmental concerns and to identify those products and areas of concern that should receive more immediate and greater regulatory and R&D attention. The ranking is based on the data presented previously and therefore is subject to the limitations of the existing data and the assumptions used in developing products and use scenarios and in estimating product characteristics (see Section 7 for major limitations of the data base); the product rankings will most likely change as more data become available, especially for those products for which little or no characterization data are available at this time. It should also be noted that the specific approach used here for product ranking represents only one of the many approaches that could be used to rank synfuel products from the standpoint of environmental concerns.

Section 6.1 presents the general basis used for product rankings. The product ranking is in part based upon an assessment of the environmentally significant characteristics of synfuel products relative to petroleum analogs; the basis for this assessment is explained in Section 6.2. The rankings of the synfuel products are presented in Section 6.3.

6.1 BASIS FOR PRODUCT RANKING

The ranking of synfuel products, which is presented in Section 6.3, was based on the following factors and considerations:

- Reported or estimated environmentally significant characteristics of synfuel products relative to those of petroleum analogs, based on considerations of exposure potential, combustive and evaporative emissions, toxic hazards, cost of control, and the extent of regulatory protections under key existing environmental legislations; products for which the environmental risks and control needs are greater and for which less protections can be anticipated under existing regulations have been given a higher ranking (see Section 6.2 for an illustration of the environmental attribute rating procedure)

- The estimated quantity of products used, both in absolute terms and as percentages of the total (synfuel and petroleum) used nationwide (Tables 53 through 55) and on a regional basis; the greater the amount of the product used and the percentage of usage, the greater the potential for presenting environmental hazards, and hence a higher positive ranking.

- Considerable scientific and engineering judgement; because of the lack of a solid data base, heavy reliance had to be placed on the professional judgement of experts most familiar with the domestic energy supply and demand picture, synfuel production/refining technologies, expected environmental characteristics of synfuel products, applicable controls, and regulatory needs.

Two approaches were examined for ranking synfuel products: (1) ranking based on strict adherence to the limited product characterization data currently available (Table 47); and (2) ranking based on the premise that in the absence of detailed characterization data, and unless the available data indicate otherwise, it would be reasonable to assume that a synfuel product would be more hazardous. For the following reasons, the first approach was selected and used to develop product rankings.

The second approach operates on the premise that if there is any room for error in ranking synfuel products, it would be more advisable to err on the safe side. This scenario asserts that, in the absence of detailed characterization data and strong evidence to the contrary, synfuel products by their very nature (new chemicals from a more "exotic" source) should be considered more hazardous. Under this scenario nearly all synfuel products would be given a positive ranking and the ranking system would lose its usefulness as a guide in prioritizing regulatory and R&D activities. Acquiring detailed characterization data and not necessarily concentrating on products that have been established to present greater environmental concern would be emphasized under the second scenario.

Under the first approach, a synfuel product would not necessarily be considered more hazardous because of the mere lack of detailed characterization data. Instead, assigning a more positive ranking to a product is supported by actual data or based on strong indications of greater potential hazards. Under the first scenario, prioritization of

TABLE 53. ESTIMATED QUANTITIES OF SYNFUEL PRODUCTS USED IN THE U.S.: 1980-87

Product	National Goal (medium)		Nominal (Low)		Accelerated (High)	
	Total Amount of Synthetic Product MMBPD	% of total Product in U.S.	Total Amount of Synthetic Product	% of total Product in U.S.	Amount MMBPD	% of U.S.
Crude shale oil (fuel)	0.02	0.13	0.0008	0.05	0.03	0.2
Shale oil refinery feed	0.20	1.2	0.07	0.45	0.34	2.0
Shale jet fuel	0.04	3.4	0.015	1.2	0.06	5.4
Shale diesel fuel	0.12	3.4	0.042	1.2	0.18	5.4
Shale residuals	0.02	0.6	0.007	0.2	0.03	0.9
Shale gasoline	0.036	0.57	0.13	0.2	0.06	0.8
Medium Btu gas (coal)	0.15	1.5	0.09	0.9	0.15	1.5
SNG (coal)	0.24	2.3	0.042	0.4	0.24	2.3
Gasifier tars, oils	0.01	6.13	0	0	0.001	0.2
Gasifier phenol	0.02	0.2	0	0	0.02	0.3
F-T LPG	0.003	0.03	0	0	0.004	
F-T medium Btu gas	0.012	0.12	0	0		
F-T SNG	0.12	0.12	0	0	0.1	1.0
F-T heavy fuel oil	0.002	0.06	0	0	0.002	0.06
F-T gasoline	0.03	0.4	0	0	0.04	0.6
M-gasoline	0	0	0	0	0	0
F-T diesel fuel	0.005	0.10	0	0	0.007	0.15
Fuel methanol	0.08	0.7	0	0	0.08	0.7
SRC II fuel oil	0	0	0	0	0	0
SRC II naphtha	0	0	0	0	0	0
SRC II LPG	0	0	0	0	0	0
EDS fuel oil	0	0	0	0	0	0
EDS naphtha	0	0	0	0	0	0
EDS LPG	0	0	0	0	0	0
H-coal fuel oil	0	0	0	0	0	0
H-coal naphtha	0	0	0	0	0	0
H-coal LPG	0	0	0	0	0	0

TABLE 54. ESTIMATED QUANTITY OF SYNFUEL PRODUCTS USED IN THE U.S.: 1988-1992

Product	National Goal (Medium)		Nominal (Low)		Accelerated (High)	
	Amount	% of total in U.S.	Amount	% of total in U.S.	Amount	% of total in U.S.
Crude shale oil (fuel)	0	0	0	0	0	0
Shale oil refinery feed	0.41	2.4	0.41	2.4	0.75	4.4
Shale jet fuel	0.08	6.5	0.09	6.5	0.16	12.0
Shale diesel fuel	0.22	6.5	0.23	6.5	0.41	12.0
Shale residuals	0.04	1.3	0.04	1.3	0.04	1.9
Shale gasoline	0.07	0.9	0.07	0.9	0.13	1.7
Medium Btu gas (coal)	0.48	5.0	0.27	2.8	0.48	5.0
SNG (coal)	0.74	7.7	0.17	1.8	0.74	7.7
Gasifier tar, oils	0.01	0.1	0.01	0.1	0.01	0.1
Gasifier phenol	0.02	0.2	0.01	0.1	0.02	0.2
F-T LPG	0	0	0	0	0	0
F-T medium Btu gas	0.012	0.12	0.01	0.06	0.01	0.12
F-T SNG	0.07	0.7	0.03	0.33	0.07	0.7
F-T heavy fuel oil	0.001	0.03	0.001	0.02	0.001	0.03
F-T gasoline	0.03	11.1	0.02	0.2	0.03	0.4
M-gasoline	0.1	1.3	0.05	0.66	0.10	1.32
F-T diesel fuel	0.01	0.03	0.002	0.04	0.01	0.1
Fuel methanol	0.24	3.1	0.14	1.8	0.24	3.1
SRC II fuel oil	0.09	1.3	0.03	0.3	0.09	1.3
SRC II naphtha	0.05	0.8	0.02	0.2	0.04	0.8
SRC II LPG	0.02	1.6	0.006	0.4	0.02	1.8
EDS fuel oil	0.06	1.0	0	0	0.06	1.6
EDS naphtha	0.03	1.0	0	0	0.03	0.6
EDS LPG	0.01	0.9	0	0	0.01	0.9
H-coal fuel oil	0.06	0.4	0	0	0.06	0.4
H-coal naphtha	0.03	0.2	0	0	0.03	0.2
H-coal LPG	0.01	0.1	0	0	0.01	0.1

TABLE 55. ESTIMATED QUANTITIES OF SYNFUEL PRODUCTS USED IN THE U.S.: 1993-2000

Product	National Goal (Medium)		Nominal (Low)		Accelerated (High)	
	Amount (MMBPD)	% of U.S.	Amount (MMBPD)	% of U.S.	Amount (MMBPD)	% of U.S.
Crude shale oil (fuel)	0	0	0	0	0	0
Shale oil refinery feed	0.43	2.4	0.43	2.4	0.75	4.4
Shale jet fuel	0.09	6.8	0.09	6.8	0.15	12.0
Shale diesel fuel	0.23	6.8	0.23	6.8	0.41	12.0
Shale residuals	0.04	1.3	0.04	1.3	0.04	1.9
Shale gasoline	0.07	0.9	0	0	0.13	1.7
Medium Btu gas (coal)	0.29	3.0	0.45	4.7	0.48	5.0
SNG (coal)	0.50	5.2	0.25	2.6	0.74	7.7
Gasifier tars, oils	0.01	0.1	0.01	0.1	0.01	0.1
Gasifier phenol	0.02	0.2	0.02	0.2	0.02	0.2
F-T LPG	0.003	0.03	0	0	0	0
F-T medium Btu gas	0.01	0.1	0.01	0.1	0.48	5.0
F-T SNG	0	0	0.07	0.7	0.07	0.7
F-T heavy fuel oil	0.001	0.03	0.001	0.03	0.001	0.03
F-T gasoline	0.03	0.4	0.03	0.4	0.03	0.4
M-gasoline	0.0	1.3	0.1	1.3	0.1	1.3
F-T diesel fuel	0.0005	0.1	0.01	0.1	0.03	0.4
Fuel methanol	0.23	3.0	0.23	3.0	0.24	3.1
SRC II fuel oil	0.09	1.3	0.09	1.3	0.09	1.3
SRC II naphtha	0.05	0.8	0.05	0.8	0.04	0.8
SRC II LPG	0.02	1.6	0.02	1.6	0.02	1.8
EDS fuel oil	0.06	1.0	0.06	1.0	0.06	1.0
EDS naphtha	0.03	0.6	0.03	0.6	0.03	0.6
EDS LPG	0.01	0.9	0.01	0.9	0.01	0.5
H-coal fuel oil	0.03	0.2	0.06	0.4	0.06	0.4
H-coal naphtha	0.03	0.2	0.03	0.2	0.03	0.2
H-coal LPG	0.01	0.1	0.01	0.1	0.01	0.1

regulatory and R&D activities does not have to await collection of additional data, which should proceed concurrently as a separate activity.

6.2 Attribute Rating Procedure

Table 56 presents the assessment of the environmental concerns for various synfuel products relative to their petroleum analogs on a "barrel-per-barrel" basis. As indicated by the headings in the table, the relative ranking considers potential for exposure, emission, and toxic hazard, and the cost of control and the adequacy of existing regulations. A (+) ranking is assigned to a product for an environmental attribute if the product is judged to present greater environmental concern than the petroleum analog; a ranking of (0) indicates that the environmental concern would be similar to or less than that of the petroleum product. Factors considered in assigning ratings to each product for each environmental attribute along with some examples of product ratings are presented below.

6.2.1 Exposure

Transport and Storage

This criteria considers the potential for environmental contamination and public exposure resulting from releases caused by accidents, spills, and fugitive emissions. As noted in Table 62, crude shale oil and the direct liquefaction fuel oils have been assigned a (+) rating. These products have been shown to contain higher amounts of water-soluble compounds than their petroleum counterparts (References 46 and 47). In the case of spills, this can result in a more rapid spread of pollutants and more extensive contamination of the water environment than would be expected from petroleum crude spills of similar size. Other products listed in the table have been assigned a (0) rating because the very limited currently available data do not indicate a higher potential for exposure associated with transportation and storage, spills, and fugitive emissions.

End Use

This criteria considers the potential for exposure associated with end use (for example, exposure to combustion products or occupational exposure). It is expected that synfuel products will be used in the same manner as petroleum products. There appears to be no strong reason to believe that exposure to the synfuel products would be any different than exposure to the petroleum products. A (0) rating is assigned to all products for this attribute category.

TABLE 56. RELATIVE ASSESSMENT OF THE ENVIRONMENTAL HAZARDS ASSOCIATED WITH SYNFUELS PRODUCTS AND PETROLEUM ANALOGS

	EXPOSURE		EMISSION FACTOR		TOXIC HAZARD		COST OF CONTROL	ADEQUACY OF EXISTING REGULATIONS			
Product	Transport & Storage	End Use	Transport & Storage	End Use	Transport & Storage	End Use		CAA	CWA	RCRA	TSCA
Crude shale oil (fuel)	+	0	0	+	+	+	+	+	+	+	0
Shale oil refinery feed	+	0	0	0	+	+	0	0	+	+	0
Shale jet fuel	0	0	0	+	0	+	+	+	0	+	0
Shale diesel fuel	0	0	0	+	0	+	+	+	0	+	0
Shale residuals	0	0	0	+	+	+	+	+	+	+	0
Shale gasoline	0	0	0	+	0	+	+	+	0	+	0
Low-/Medium-Btu gas (coal)	0	0	0	+	+	+	+	+	0	+	0
SNG (coal)	0	0	0	0	0	0	0	0	0	0	0
Gasifier tars and oils	0	0	0	+	+	+	+	+	+	+	0
Gasifier phenol	0	0	0	+	+	+	0	0	0	0	0
F-T LPG	0	0	0	0	0	0	0	0	0	0	0
F-T medium Btu gas	0	0	0	0	0	0	0	0	0	0	0
F-T SNG	0	0	0	0	0	0	0	0	0	0	0
F-T heavy fuel oil	0	0	0	0	0	0	+	0	0	+	0
F-T gasoline	0	0	0	0	0	0	0	0	0	+	0
M-gasoline	0	0	0	0	0	0	0	0	0	+	0
F-T diesel fuel	0	0	0	0	0	0	0	0	0	+	0
Fuel methanol		0	0	+	0	0	0	+	0	+	0
SRC II fuel oil	+	0	0	+	+	+	+	+	+	+	0
SRC II naphtha	0	0	0	0	+	+	0	0	+	+	0
SRC II LPG	0	0	0	0	0	0	0	0	0	0	0
EDS fuel oil	+	0	0	+	+	+	+	+	+	+	0
EDS naphtha	0	0	0	0	+	+	0	0	+	+	0
EDS LPG	0	0	0	0	0	0	0	0	0	0	0
H-coal fuel oil	+	0	0	+	+	+	+	+	+	+	0
H-coal naphtha	0	0	0	0	+	+	0	0	+	+	0
H-coal LPG	0	0	0	0	0	0	0	0	0	0	0

6.2.2 Emission Factor

Transportation and Storage

This environmental attribute considers the amount of material that would be released to the environment as a result of transportation and storage activities, without regard to pollutant mobility and the number of people potentially exposed (population density consideration). The potential sources of release include primarily fugitive emissions and spills. The limited data currently available on the characteristics of synfuel products do not indicate higher volatility or greater potential for accidental spills (see Section D.4, Appendix D). Accordingly, all synfuel products have been given a "0" ranking for this environmental attribute.

End Use

End use emisssions include combustion emissions and evaporative emissions assoicated with end uses (for example, use of gasoline in cars). As indicated in Table 56 synfuel products that have been judged to present greater end use emissions than petroleum analogs are shale oil products and direct liquefaction fuel oils (because of higher NO_x emissions-see Table 47); low-/medium-Btu gas (because of higher emissions of trace elements and heterocyclics); methanol (because of higher aldehyde emissions), and gasifier by-products (if used as fuel). Because of their similar volatilities, the use of shale oil as a refinery feedstock is expected to result in quantities of fugiture emissions similar to those which would result from the use of crude petroleum. Thus, a (0) rating has been assigned to the use of shale oil as refinery feed.

6.2.3 Toxic Hazard

Transport and Storage

The toxic hazard criteria includes both human and ecological toxicity considerations. The ratings shown in Table 62 are based on the results of the various tests of biological activity discussed in Section 4.3 where no actual test results were available, on the consideration of chemical characteristics. The limited available test results indicate that the toxicity of refined shale products is similar to that of their petroleum counterparts. These products have been assigned a (0) rating. Because of the presence of known toxic contaminants at levels higher than those in the products they will displace in the market, low-/medium-Btu gas and gasifier tars, oils, and phenols are assigned a (+) rating. The available test results indicate that crude shale oil, shale residuals and direct liquefaction fuel oils and naphthas are more toxic than their petroleum counterparts. As shown in Table 56, these products have been assigned a (+) rating. Examination of the chemical composition of the LPG's, SNG, and indirect coal liquids reveals no reason to expect them to be more biologically active than their petroleum counterparts; these products have also been assigned a (0) rating.

End Use

Most synfuels are expected to be used primarily as fuels in combustion systems. Assessment of the known and estimated composition of many of the combustion gases (see Tables 47 and 48, respectively) indicates that the combustion products from crude shale oil and shale oil products, and from low-/medium-Btu coal gas, gasifier tars, oils, and phenols, and direct liquefaction fuel oils would be more toxic than the combustion products from their petroleum-derived counterparts. When used as feedstocks, shale oil and direct liquefaction naphthas are expected to pose greater toxic hazards than petroleum crudes and naphthas. Medium-Btu gases and gasifier tars, oils, and phenols, if used as feedstocks rather than as fuels, are also expected to pose greater toxic hazards than currently used feedstocks. Accordingly, all of these synfuels have been assigned (+) ratings. The remaining products in Table 56, which would be used primarily as fuels, are not expected to produce more toxic combustion gases than their petroleum-derived counterparts. Because little is known about the effects of chronic exposure to low levels of methanol (levels below those which are known to produce acute symptoms) and the health effects characteristics of methanol combustion products, it is very difficult to assess the toxic hazards associated with the use of methanol as fuel relative to the use of petroleum gasoline. Combustion of methanol has been shown to produce higher amounts of aldehydes but lesser quantities of other potentially hazardous substances such as PNA's; therefore, the overall health effects of methanol relative to petroleum gasoline cannot be judged based solely on the available data on compositon of combustion products. Because of these uncertainties a ranking of (0) has been assigned to methanol.

6.2.4 Cost of Control

The cost-of-control attribute has been rated primarily on the basis of added control costs for regulated pollutants wherever such pollutants (NO_x especially, and occasionally particulate and SO_x) are anticipated to be emitted at levels exceeding those from the combustion of petroleum products for synthetic fuel use. Much more information will be needed on combustion pollutants and associated solid and liquid wastes (for example, particulate collection, storage tank aqueous sludges) to update these ratings. For example, the replacement cost frequency for automobile catalytic converters could be significantly increased if trace synthetic gasoline constituents such as arsenic result in rapid catalyst deactivation. Based on these cost considerations, a rating of (+) has been assigned to shale oil products (used as fuel), low-/medium-Btu gas, gasifier tars and oils, and direct liquefaction fuel oils.

6.2.5 Adequacy of Existing Regulations

The rating under this category is broken down under the grouping of regulations established under the authority of the major environmental legislation that could affect synfuel product utilization (see Section 5.3.2 for a review of key pertinent legislation). A (+) entry implies that a greater amount of regulatory protection will probably be needed than is

now available through existing or near-term regulations, relative to petroleum product or natural gas use. A (0) entry implies that existing regulations offer the same protection as now achieved with petroleum product.

Clean Air Act (CAA)

As noted in Section 5.3.2, most of the existing and planned air quality protection regulations focus on criteria pollutants (that is, SO_x, NO_x, CO and particulate matter) or on classes/categories of substances (for example, volatile organic carbon). Although very important in air quality protection, these criteria do not address specific hazardous components of pollutant categories included in the standards (for example, polycyclic organic matter in the particulates) or other hazardous substances that might be emitted. This limitation of the existing air pollution control regulations applies to both synfuel and petroleum products end uses, although to different degrees. The relative severity of this limitation and therefore the greater need for regulatory protection has been the basis for the ranking shown in Table 56. As indicated in the table, a (+) ranking has been assigned to shale oil products (used as fuel), low-/medium-Btu gas, gasifier tars and oils, fuel methanol, and direct liquefaction fuel oils. These products have been assigned (+) ratings because of possible emissions of higher amounts of toxic substances (hazardous trace elements associated with the particulates emitted in the combustion of shale oil products and low-/medium-Btu gas; emissions of higher amounts of PNA's with synfuels that are generally richer in aromatics).

Clean Water Act (CWA)

The objective of the Clean Water Act is to regulate point source discharges into navigable waters. Effluent discharges from synfuel storage and using industries would be subjected to effluent guidelines for point source industrial discharges. Under the provisions of the Act, effluent controls using the best available technology economically achievable (BATEA) would be required for the control of some 65 substances/classes of substances, commonly referred to as priority or "Consent Decree" pollutants. EPA is to promulgate and apply BATEA standards for industrial point source categories by July 1, 1984. The priority pollutants include some of the hazardous substances (benzene, phenol, arsenic, and ethylbenzene) that are expected to be present in wastewaters from plants using synfuel products, as the result of direct product uses or accidental spills. Because of the lack of data on the characteristics of the

wastewaters from such plants* and on the capabilities and costs of applicable control technologies, it is very difficult to predict the adequacy of the yet-to-be promulgated BATEA standards for the control of effluent discharges from synfuel storage/using industries.

Because of these uncertainties, the assessment of the relative degree of regulatory protection provided under the Clean Water Act for synfuel vs. petroleum products storage/using facilities has been based primarily on the consideration of the known or expected differences in the characteristics of synfuel products relative to their petroleum analogs. It is thus assumed that the differences in product characteristics would be reflected in differences in the wastewaters, which would in turn affect the adequacy of BATEA in providing equal protection. Based on these considerations, the following products have been assigned a (+) ranking: crude shale oil (fuel and refinery feedstock), shale residuals, gasifiers tars and oils and direct liquefaction fuel oils and naphthas.

Resource Conservation and Recovery Act (RCRA)

Utilization of synfuel products would produce solid wastes in the form of sludges from storage tanks and cleaned-up spill material and, in some cases, solid wastes and sludges from air pollution control. Although these wastes are not presently included in the list of "specific" hazardous waste developed by EPA pursuant to RCRA, the wastes would most likely be designated as hazardous based on other RCRA criteria (for example, containing specific chemicals listed as toxic materials see Section 5.3.2). Effort to develop hazardous waste management regulations pursuant to RCRA is still in progress and data on the characteristics of synfuel utilization wastes are currently unavailable; accordingly, in Table 56 the indicated assessment of the relative degree of regulatory protection provided under RCRA for synfuel vs. petroleum products utilization wastes primarily reflect judgment as to the relative hazards posed by the two waste categories, based on known or expected differences in the characteristics of synfuel products relative to their petroleum analogs. As noted in Table 56, a (+) ranking has been assigned to shale oil products; gasifiers, tars, oils and phenols; direct liquefaction fuel oils and naphthas; and low-/medium-Btu gas. Hazardous solid wastes resulting from air pollution control would result from the use of low-/medium-Btu gas as fuel.

* The characteristics of wastewater from a plant using synfuels (for example, a petroleum refinery that uses crude shale as part of its feedstock) would be affected by several factors including chemical characteristics of the specific synfuel product used, the extent of blending/usage (for example, in the case of refinery handling shale oil, the amount of shale oil as a percentage of total refinery feed), refining/processing steps used,and in-plant water conservation and waste minimization/management practices.

Toxic Substances Control Act (TSCA)

As noted in Section 5.3.2, EPA's approach to the regulation of synfuel products under TSCA is still being formulated. Under the mandate of TSCA, many of the synfuel products would fall into the "new products", "new uses", or "products produced using different processes" categories and would be subject to pre-manufacturing notification provision of TSCA. At the present time, a key point of uncertainty relates to whether for synfuel products, the assessment of "unreasonable risks", which is the basis for product regulation under TSCA, should be in "absolute" terms or in terms of product properties relative to those of existing and widely used petroleum products.

The assessment of the relative degree of regulatory protection that would be provided by TSCA for synfuel vs. petroleum products requires resolution of the previously mentioned uncertainties. Strict interpretation of the TSCA mandate to regulate substances that present "unreasonable risks" to health and the environment would suggest that regulatory protection provided under TSCA for synfuel products (as well as petroleum or other products of commerce) should be adequate. Because of this and the regulatory uncertainties, a ranking of (0) has been assigned to all products in Table 56 in connection with the adequacy of TSCA regulations.

6.3 PRODUCTS RANKING

Table 57 presents the results of synfuel products ranking. The products are ranked into three groups: those eliciting the most concern (ranked as 1), those indicating modest concern (ranked as 2) and those generating a low level of concern at the present time (ranked as 3). As noted in the table, in the near term (1980-1987 period), synfuel products of concern are primarily the shale oil products and medium-Btu gas and SNG from coal gasification. Under the nominal scenario, shale oil refinery feed elicits the most regulatory attention, other shale oil products and medium-Btu gas elicit modest concern, and SNG requires low level of attention. Except for a ranking of 1 for direct use of crude shale oil as fuel under the national goal and accelerated scenarios, the rankings remain the same under the three production scenarios during 1980-1987.

For the 1988-1992 period, when products from SRC II and F-T processes will also be marketed, the products eliciting most concern would consist of shale oil refinery feed, fuel methanol, SRC II fuel oil, gasifier tars and oils, and medium-Btu gas (under national goal and accelerated scenarios). F-T products and LPG from SRC II are ranked as low priority products during 1988-1992. During the 1993-2000 time frame, shale oil refinery feed, medium-Btu gas (under nominal and accelerated scenarios), gasifier tars and oil, and fuel oils from the three liquefaction processes are ranked as 1, F-T products are assessed as 3, and all other products are given a 2 ranking.

TABLE 57. PRIORITY RANKINGS OF SYNTHETIC FUEL PRODUCTS

Product	1980-1987			1988-1992			1993-2000		
	National Goal	Nominal	Accelerated	National Goal	Nominal	Accelerated	National Goal	Nominal	Accelerated
Crude shale oil (fuel)	1	2	1	-	-	-	-	-	-
Shale oil refinery feed	1	1	1	1	1	1	1	1	1
Shale jet fuel	2	2	2	2	2	2	2	2	2
Shale diesel fuel	2	2	2	2	2	2	2	2	2
Shale residuals	2	2	2	2	2	2	2	2	2
Shale gasoline	2	2	2	2	2	2	2	2	2
Medium Btu gas (coal)	2	2	2	1	2	1	2	1	1
SNG (coal)	3	3	3	-	-	-	-	3	-
Gasifier tar	-	-	-	1	1	1	1	1	1
Gasifier oils	-	-	-	-	-	-	-	-	-
Gasifier phenol	2	2	2	2	2	2	2	2	2
F-T LPG	-	-	-	-	-	-	-	-	-
F-T medium Btu gas	-	-	-	3	3	3	3	3	3
F-T SNG	-	-	-	3	3	3	3	3	3
F-T heavy fuel oil	-	-	-	3	3	3	3	3	3
F-T gasoline	-	-	-	3	3	3	3	3	3
M-gasoline	-	-	-	3	3	3	3	3	3
F-T diesel fuel	-	-	-	3	3	3	3	3	3
Fuel methanol	-	-	-	1	1	1	1	1	1
SRC II fuel oil	-	-	-	1	1	1	1	1	1
SRC II naphtha	-	-	-	2	2	2	2	2	2
SRC II LPG	-	-	-	3	3	3	2	2	2
EDS fuel oil	-	-	-	-	-	-	1	1	1
EDS naphtha	-	-	-	-	-	-	2	2	2
EDS LPG	-	-	-	-	-	-	3	3	3
H-Coal fuel oil	-	-	-	-	-	-	1	1	1
H-Coal naphtha	-	-	-	-	-	-	2	2	2
H-Coal LPG	-	-	-	-	-	-	3	3	3

- Indicates product is not produced under the scenario shown
Degree of Concern: Most = 1, Modest = 2, Low = 3

The rankings presented in this section generally indicate the greatest level of environmental concern and regulatory requirements for shale oil refinery feed and coal liquids. As discussed in Section 5, these liquids have been demonstrated to be more hazardous than petroleum crude and fuel oils (a major factor in assigning a 1 ranking). This, and the fact that shale oil products will be the first synfuels that are expected to enter the market on a large scale are the major factors that signify near-term environmental concerns for shale oil products in general and shale oil fuel and refinery feed in particular.

SECTION 7

DATA GAPS AND LIMITATIONS AND RELATED PROGRAMS

As noted previously, a number of major gaps in the existing data base preclude accurate analysis of the potential environmental concerns associated with a future large scale commercial synfuel industry in the U.S. and of applicable controls and mitigation measures. These data gaps and limitations relate to (a) present uncertainties regarding the size of the industry, specific synfuel technologies that will be used, locations of production facilities and product distribution systems, and the specific areas of synfuel use; and (b) lack of adequate characterization data on synfuel products and on the analogous petroleum products that they will partially or totally replace. The first category affects the regional environmental implications and synfuel production scenarios and market analyses developed in Sections 2 and 3 of this report, whereas the second category introduces uncertainties in the estimated characteristics of synfuels products (Section 4) and the analysis of environmental concerns (Section 5). Both types of data limitations impact the regional environmental implications and the priority ranking of the synfuel products.

This section examines the major factors responsible for data gaps and limitations, summarizes the data gaps and limitations, and lists some of the on going and planned programs that are expected to generate some of the needed data for a more refined analysis of the environmental implications of large-scale utilization of synfuel products.

7.1 MAJOR FACTORS RESPONSIBLE FOR DATA GAPS AND LIMITATIONS

The limitations of the available data stem from a large number of factors, most important of which are the following:

- The present uncertainties surrounding the U.S. energy policy and changing domestic and international political conditions that impact oil and natural gas supplies and prices.

  These uncertainties make it extremely difficult if not impossible to develop reasonably accurate forecasts of the extent of the contribution of synfuels to the near-term energy picture in the U.S.

- Synfuel production processes are still evolving and will be continuously modified and refined before optimum technologies and specific designs and equipment are selected for use in large-scale commercial facilities. In the U.S., synfuel pilot plants and experimental units that have been operated or are currently in operation have been designed and operated primarily to develop design criteria and process optimization with little emphasis on product characterization from an environmental standpoint or on definition of optimum conditions for production of environmentally acceptable products. Thus, the characteristics of the products from pilot-plant operations may not accurately reflect those of products that would be produced in large-scale installations.

- Some synfuel processes have been used commercially abroad; these commercial facilities do not generally incorporate the design and operating features that would likely be used in U.S. facilities to minimize pollutant generation and improve the environmental acceptability of products. Moreover, the coals used at these facilities differ from those that will be used at commercial synfuel plants in the U.S. Because of these reasons, the available product characterization data from commercial installations abroad may not adequately reflect the anticipated characteristics of products from commercial plants in the U.S.

- Most of the process test and evaluation and product characterization efforts to date have been in connection with the production of primary synfuels (that is, shale oil, low-/medium-Btu gas, SNG, and coal liquids); very little effort has been expended to evaluate the refining of synfuels and the subsequent production and characterization of secondary products (synfuel-derived naphtha, gasoline, solvents, etc.).

- Although many of the environmental pollution controls and mitigation measures that would be used in connection with production, distribution, and use of synfuel products have been used successfully in other industries and in connection with petroleum based products, they have not been evaluated specifically on synfuel products and their effectiveness in such applications remains to be evaluated.

- A significant portion of the synfuel process development efforts and the testing of the synfuel products is being carried out by private industry. Much of the data that may exist for these processes and the characteristics of their products is considered proprietary and is not publicly available.

- For those synfuel processes for which some product characterization data are available, such data are not comprehensive in that not all products and characteristics of environmental interest are addressed.

- Even though there has been a long standing interest in the extraction of oil from oil shale and the conversion of shale oil and coal to liquids and gaseous fuels, and although a number of synfuel facilities have been in operation for some time in other countries, it is only very recently that there has been a very strong interest in assessing the environmental aspects of synfuel technologies. The present study appears to constitute a first attempt to focus attention on the potentially broad environmental implications of large-scale marketing and utilization of synfuel products.

- Because of the large-scale and widespread use of petroleum products, these products have generally come to be viewed by the public as environmentally innocuous. Accordingly, the specifications for petroleum products have primarily emphasized performance with little attention to environmental considerations. Very little data are available on potential pollutants and toxicological and ecological properties of many of the petroleum products to provide a baseline for assessing the relative safety of synfuel products.

7.2 SPECIFIC DATA GAPS AND LIMITATIONS

In general, the data gaps and limitations fall into two categories: (1) relevant data that are totally nonexistent or unavailable and (2) data that are available but lack comprehensiveness, or have been obtained under conditions significantly different than those anticipated in large-scale production operations and product marketing and distribution systems in the United States. Examples in the first category are the lack of data on the concentration of coal-derived impurities in synfuel products (for example, LPG and solvents and the chemical feedstocks that will be used in industry and commerce), on the characteristics of sludges from synfuel products storage facilities, and on the effectiveness and service life of conventional control technologies and mitigation measures (for example, catalytic convertors in automobiles) in synfuel service. These data gaps result from the fact that many of the synfuel products have not yet been produced on a commercial scale and large-scale distribution, service networks, and use patterns have not yet been established for them. Even though certain product characteristics can be estimated through engineering studies based on process engineering considerations and the knowledge of the input materials, such studies have not been conducted for the majority of synfuels products, especially those produced further "downstream". For some products for which some data might exist (for example, EDS direct liquefaction process), such data are not publicly available because they are proprietary.

Examples of the second category of data gaps are the lack of trace element and toxicological and ecological information for many of the synfuels products, their petroleum analogs, and emissions from their combustions. Where some data are available, such data do not cover

detailed composition and types and levels of trace elements and coal-derived impurities, long-term bioassay and health effects information, biodegradability and potential for environmental persistence.

Because large-scale synfuel production facilities do not currently exist, the first category of data gaps can only be partially filled, for example, through engineering studies, at the present time. Many of the gaps in the second category, however, can and should be filled through multimedia environmental sampling and analysis of the products and process/discharge streams at pilot plants and commercial foreign synfuels facilities and through product testing and evaluation programs (for example, combustion testing of fuels). Even though pilot plants and test and evaluation units may not be scalable to or representative of commercial facilities and applications, sampling at pilot plants and test and evaluation studies represent the best and the only means of acquiring meaningful data on product characteristics and on the effectiveness of various controls. Such sampling and analysis, coupled with product testing and evaluation, can provide valuable and timely inputs to the evolution of the synfuel industry and would ensure that: (1) environmental considerations are included in the selection of processes, equipment, and waste management options for commercial facilities, and (2) the drafting of specifications for synfuel products, new source performance standards for synfuel plant and emission standards for facilities using synfuel products are based on the best available technical and engineering data. Several currently underway or planned programs involve sampling at pilot plants, bench-scale units, or foreign commercial synfuel facilities; environmental characterization of synfuel products; and testing and evaluation of certain uses of synfuel products. The more important of these and related engineering studies are summarized in Section 7.3.

7.3 RELATED PROGRAMS

Major programs that are expected to generate some of the data needed for environmental assessment of synfuel product utilization fall into several categories, including EPA-sponsored programs, DOE-sponsored programs, programs carried out by other agencies such as the Department of the Navy and the Tennessee Valley Authority, programs carried out by developers and product users, and programs carried out in connection with commercial synfuel projects. The Fossil Fuels Research Materials (FFRM) facility was recently established between the U.S. EPA and DOE to provide support for health and environmental effects studies for the generation of some of the data needed for environmental assessment of synfuel technologies. The data collected by process developers and major potential users of synfuels are considered company proprietary and are not made public. In connection with the requirements for the preparation of environmental impact assessments, the sponsors of major commercial synfuel projects collect certain product characterization data and analyze environmental concerns and alternative mitigation measures on regional and local levels. Major commercial coal liquefaction and gasification projects and cooperative agreements and feasibility study grants for synfuels are listed in Appendices B and C, respectively. The most relevant of the

government funded programs, especially those most directly related to the characterization of synfuel products from the standpoints of environmental health effects and combustion emissions, are reviewed briefly in the following paragraphs.

7.3.1 Environmental and Health Effects Programs

Tables 58 and 59 summarize the chemical and biological/ecological tests currently being conducted by EPA and DOE laboratories and by other government and private agencies, such as the U.S. Navy, the American Petroleum Institute, and several universities, on various samples of shale oil and coal liquefaction products. As indicated in the tables, the products are undergoing a fairly comprehensive chemical analyses as well as a battery of bioassays including small animal carcinogenicity, tumorigenicity, acute oral toxicity, and bacterial mutagenicity. Results of the testing are just beginning to be obtained and have not yet been released.

In addition to the studies shown in Tables 58 and 59 large-scale toxicological and combustion studies are also being conducted independently by the U.S. Navy on oil shale products. The products being studied include DFM (acid pretreat), final JP-4, JP-5, JP-8 products, and final DFM product. Tests being conducted include acute oral toxicity, acute inhalation toxicity, acute dermal toxicity, skin and eye irritation studies, skin sensitization studies, subacute dermal toxicity, chronic inhalation toxicity, and behavioral toxicity.

Biomedical screening studies of SRC II syncrude and petroleum materials are also being conducted by DuPont. To date, Ames mutagenicity testing and mouse skin paintings have been conducted on SRC II fuel oil blends of 2.9:1 middle-to-heavy distillate. Results of these tests have not yet been made public.

Most of the current chemical and biological/ecological testing of coal gases involve low-/medium-Btu gasification products rather than SNG. The Morgantown Energy Research Center and the Lovelace Inhalation Toxicology Research Institute are currently conducting toxicological evaluations of effluents and process streams from low-Btu gasifiers. Results of these studies have not yet been released.

Studies pertaining to high-Btu gasification are being carried out by DOE and EPA. DOE has recently undertaken a program for the biological and toxicological characterization of process and product streams from the Hygas and other SNG pilot plants. Results are not available from the program, which is being conducted at Argonne National Laboratory and several other DOE laboratories.

7.3.2 Combustion Characteristics

The performance of middle and heavy distillates, fuel oil blends, and 3:1 middle-to-heavy distillates from the SRC II pilot plant is currently

TABLE 58. CHEMICAL, BIOLOGICAL AND ECOLOGICAL TESTING OF PARAHO/SOHIO CRUDE AND REFINED SHALE OIL SUITE

RESEARCH MATERIAL	Chemistry						Biology, Ecology								
	Comprehensive Analysis	PAH Analysis	Stability Screening	Special Studies	Chemical Class Fractionation	Carcinogenesis	Bacterial Mutagenesis	Drosophila Mutagenesis	Acute Oral Toxicity to Mice	Pond Ecosystem Effects	Marine Ecosystem Effects	Combustion Products Mutagenicity	Cilia Toxicity	Tumorigenicity	Toxicity & Irritation
Crude Shale Oil	1	2,5	15	15	16	3-5	5-7	8,9	10	11	--	--	13	17,18	--
HOT Shale Oil	1	2,5	15	15	16	3-5	5-7	8	10	11	--	--	13	17,18	--
Weathered Gas Feedstock	1	--	15	--	16	--	6	8	--	--	--	--	--	--	--
JP-5 Precursor	1	--	15	--	16	--	6	8	--	--	--	--	--	--	--
JP-8 Precursor	1	--	15	--	16	--	6	8	--	--	--	--	--	--	--
DFM Precursor	1	2	15	--	16	3-4	6	8	--	--	--	12	--	--	--
HDT Residue	1	2,5	15	15	16	3-5	5,6	8	10	11	--	--	13	17	--
JP-5 Product	1	5	15	--	16	3-5	5,6	8,9	--	11	--	--	--	17	17
JP-8 Product	1	5	15	--	16	3-5	5,6	8	--	--	--	--	--	--	17
DFM Product	1	2,5	15	15	16	3-5	5,6	8	--	11	14	12	13	18	17
Acid Sludge	1	--	--	--	16	--	6	8	--	--	--	--	--	--	--
Petroleum JP-5	--	5	15	--	16	4,5	5,6	8,9	--	11	--	--	--	--	17
Petroleum JP-8	--	5	15	--	16	4,5	5,6	8	--	--	--	--	--	--	17
Petroleum DFM	--	5	15	--	16	3	5,6	8	--	11	14	--	13	18	17

Key to Investigators

1. L. W. Burdett, Union Oil Co. (API Sponsored)
2. S. C. Blum, Exxon (API Sponsored)
3. W. Barkley, Kettering Laboratory
4. J. M. Holland, ORNL
5. L. M. Holland, LASL
6. J. L. Epler, ORNL
7. F. T. Hatch, LLL
8. S. Zimmering, Brown University
9. M. Legatur, University of Texas
10. H. P. Witschi, ORNL
11. J. M. Giddings, ORNL
12. D. L. Coffin, EPA
13. J. N. Dumont/T.W. Schultz, ORNL
14. N. Richards, EPA
15. W. H. Griest, ORNL
16. B. R. Clark, ORNL
17. L. Smith, ORNL
18. W. Pepelco, EPA

TABLE 59. HEALTH EFFECTS TESTING FOR DIRECT COAL LIQUIDS[45]

Coal Liquids	Teratogenesis	Oral Toxicity-Rat	Oral Toxicity-Mouse	Toxicity & Acetylcholinesterase Inhibition	Cilia Toxicity	Drosophila Mutagenesis	Microbial Mutagenicity	Carcinogenicity	Mammalian Cytotoxicity	Cell Transformation	Algal Toxicity	Marine Ecosystem Effects	Amphibian Embryotoxicity	Daphnia-Fathead Minnow Toxicity
SRC II Fuel Oil Blend	1	-	2	9	-	3,4	4,11, 12	7,12	-	-	5	6	-	-
SRC II Heavy Distillate	10	10	-	-	-	-	10	10	10	10	-	-	-	-
SRC II Middle Distillate	10	10	11	-	-	-	10	-	10	-	-	-	-	-
SRC II Light Distillate	10	10	-	-	-	-	10, 11, 12	10, 11, 12	10, 11, 12	10	-	-	-	-
EDS Coal Liquids	-	-	-	-	-	-	12	-	12	-	5	-	13	14
H-Coal Liquids	1	-	-	-	13	3,4	12	12	-	-	-	-	-	-
SRC I	1	-	-	-	-	-	-	-	-	-	-	-	-	-

Key to Investigators

1 N. Klein, University of Connecticut
2. H.P Witschi, ORNL
3 S Zimmering, Brown University
4. M Legatur, University of Texas
5. J. M. Giddings, ORNL
6. N Richards, U.S. EPA
7. J.M. Holland, ORNL
8 J. L. Epler, ORNL
9. A.P Pfuderer, ORNL
10. Battelle Memorial Institute, Richard
11. Bartlesville Energy Technology Center
12. W.H. Calkins, du Pont
13. J.N. DuMont, J.W. Schultz, ORNL
14. R. Milliman, ORNL

being studied by the Pittsburg Energy Technology Center. Results of this study have not yet been made available.

No studies are currently underway for the characterization of combustion products of indirect coal liquids. However, it is likely that performance characteristics of Mobil-M and Sasol products are continuing to be studied by their respective developers.

TVA, in conjunction with EPRI, Radian, and TRW, is currently sponsoring a program for the environmental assessment of waste streams associated with low-/medium-Btu gasification. Although the objectives of the TVA program do not include product or product combustion characterization per se, EPA is expected to participate in the program at a future data in order that bioassays of waste stream and possibly products/by-products be performed. To date, the TVA program has included sampling and analysis activities at the Ruhr-Chemie gasification facility in Germany involving a Texaco gasifier and the testing of an Illinois basin coal. Testing of another Illinois coal at a Kopper-Totzek facility in Greece is planned for late February.

REFERENCES

1. Lee, B.S., Synthetic Fuels and the Total Cost of Oil Import, presented at Seventh Annual International Conference on Coal Gasification, Liquefaction & Conversion to Electricity, August 1980.

2. Bechtel National Inc., Production of Synthetic Liquids from Coal, 1980-2000: A Preliminary Study of Potential Impediments, Final Report, San Francisco, California, December 1979.

3. Mechanical Technologies, Inc., An Assessment of Commercial Coal Liquefaction Process Equipment Performance and Supply, Lathan, New York, January 1980.

4. Monsanto Research Corporation, Synthetic Transportation Fuels from Coal, Mound Facility, Miamisburg, Ohio, November 1979.

5. UOP/SDC, Feasibility Assessment: Production of Synthetic Fuels from Direct and Indirect Liquefaction Processes. McLean, Va. January 1980.

6. Cameron Engineers, Oil Shale Seminar Proceedings, September 2627, 1977.

7. Chevron Research Co., Refining and Upgrading of Synfuels from Coal and Oil Shale by Advanced Catalytic Processes, July 1978.

8. The Pace Company Consultants and Engineers, Cameron Synthetic Fuels Report, June 1980.

9. Cameron Engineers, Inc., Synthetic Fuels Data Handbook, 1978.

10. J. Potts, K. Hastings, and R. Chillingworth, Expanded Bed Hydroprocessing of Solvent Refined Coal (SRC) Extract, Cities Service Company, U.S. Department of Energy, FE-2038-34.

11. Picture Tour of Sasol-II Coal Liquefaction Plant, Chemical Engineering Progress, pp 85-88, March 1980.

12. D. J. Deutch, A Big Boost for Gasoline from Methanol, Chemical Engineering , pp 43-45, April 7, 1980.

13. U.S. Department of Energy, Achieving a Production Goal of 1 Million B/D of Coal Liquids by 1990, DOE-FE-10490-01.

14. K.A. Rogers and R.F. Hill, Coal Conversion Comparisons, Engineering Societies Commission on Energy, Inc., FE-2468-51.

15. TRW Energy Engineering Division, Demonstration Plant Common Critical Problems, Phase I Report, Contract No. EF-77-C-01-2623.

16. Pittsburgh Energy Technology Center, Institutional Plan, FY1980-FY1985, November 30, 1979.

17. Encyclopedia of Chemical Processing and Design, pp 41-67, Marcel Dekker, Inc., 1979.

18. Continental Oil Company, Phase I, The Pipeline Gas Demonstration Plant, Stamford, Connecticut. FE-2542-13.

19. Fluor Engineers and Contractors, Inc., Engineering Evaluation of Conceptual Coal Conversion Plant Using the H-Coal Liquefaction Process, EPRI AF-1297, December 1979.

20. C.F. Braun and Company, Factored Estimates for Western Coal Commercial Concepts, FE-2240-5.

21. Fluor Engineers and Contractors, Economic Studies of Coal Gasification Combined Cycle System for Electric Power Generation, EPRI AF-642.

22. TRW Study in Progress.

23. Shreiner, Max, Research Guidance Studies to Assess Gasoline from Coal by Methanol to Gasoline and Sasol-Type Fischer-Tropsch Technologies, Mobil Research and Development Corp., FE-2447-13, August 1978.

24. Exxon Research and Development Co., EDS Coal Liquefaction Process Development Phase IIIA, FE-2353-13, January 1978.

25. Entering the Synthetic Fuels Age: Construction Begins on Great Plains Gasification Plant, American Gas Association Monthly Journal, Vol. 62, No. 9, September 1980.

26. The Pittsburgh Midway Coal Co., Demonstration Plant MarketIng Plan: SRC-II, Demonstration Project Phase Zero, Task 3, Deliverable No. 17, Prepared for the Department of Energy, July 31, 1979.

27. Alternative Fuels Production Programs Feasibility Study and Cooperative Agreements Proposal Award, DOE, August 1980.

28. SRI International, Draft Final Report Environmentally Based Siting Assessment for Synthetic Liquid Fuels Facilities, Prepared for Department of Energy, December, 1979.

29. Mujadin, M.J., Great Plains Gasification Associates Coal Gasification Project, American Natural Resource Company, presented at Conference on Advances in Coal Utilization Technology, May 1978, 1979.

30. Energy Information Administration, Energy Data Reports, Petroleum Statement, Monthly, November 1979.

31. National Petroleum Council, Petroleum Storage and Transportation Capacities - Gas Pipeline, Vol. VI, December 1979.

32. U.S. Department of Energy, Petroleum Supply Alternatives for the Northern Tier and Inland States Through the Year 2000, Vol. I, October 31, 1979.

33. Energy Information Administration, State Energy Data Report, April 1980.

34. National Petroleum Council, Petroleum Storage and Transportation Capacities - Pipelines, Vol. III, December 1979.

35. Synfuels, September 12, 1980.

36. Information provided to TRW by Robert Garbe, U.S. EPA, Ann Arbor, Michigan, January 16, 1981.

37. M. Ghassemi, K. Crawford and S. Quinlivan, Environmental Assessment Report: Lurgi Coal Gasification Systems for SNG, EPA-600/7-79-120, May 1979.

38. M. Ghassemi, K. Crawford and S. Quinlivan, Environmental Assessment Data Base for High-Btu Gasification Technology, Vols I-III, EPA-600/7-78-186a, September 1978.

39. R.J. Young, Potential Health Hazards Involved with Coal Gasification, DHEW (NIOSH) Technical Report, No. 79-113, Cincinnati, Ohio, November 1978.

40. NIOSH Criteria for a Recommended Standard, Occupation Exposures in Coal Gasification Plants, DHEW (NIOSH) Technical Report No. 78-191, Cincinnati, Ohio, September 1978.

41. M. P. Kilpatrick, et al., Environmental Assessment: Source Test and Evaluation Report - Wellman-Galusha (Ft. Snelling) Low Btu Gasification, EPA-600/7-80-097, May 1980.

42. Information provided to TRW by R. Dwyer, Illinois State Geological Survey, Urbana, Illinois, January 22, 1981.

43. TRW Energy Systems, Carcinogens Relating to Coal Conversion Processes, Final Report, Contract No. E(49-18)-2213.

44. Information provided to TRW by Dr. William Lloyd, OSHA, December 22, 1980.

45. Hazardous Materials Management Journal, May-June 1980.

46. Giddings, J.M. and J.N. Washington, Coal Liquefaction Products, Shale Oil, and Petroleum. Acute Toxicity to Freshwater Algae. Environmental Science and Technology, Volume 15 (No. 1)., 106-108, January 1981.

47. Giddings, J.M., et al., Toxicity of a coal Liquefaction Product to Aquatic Organisms, Bull. Environmental Contam., Toxicol., Vol. 25, 1-6, 1980.

48. W.H. Griest, D.L. Coffin and M.R. Guerin, Fossil Fuels Research Matrix Program, ORNL/TM-7346, June 1980.

APPENDIX A

INTERVIEWS WITH POTENTIAL SYNFUEL SUPPLIERS AND USERS

TABLE OF CONTENTS

		PAGE
A.1	Expected Involvement in Synfuel Industry	A-2
A.2	Synfuel Products Market	A-2
A.3	Significant Factors Impacting the Synfuel Industry . .	A-4
A.4	Anticipated Period of Time to Buildup, Establish a Commercial Synfuel Industry	A-4
A.5	Synfuel Products Compared to Petroleum-Based Products	A-4
A.6	Anticipated Modifications to Facilities or Procedures for Marketing Synfuel Products	A-5
A.7	Awareness of Environmental Issues Relating to Synfuel Utilization	A-6

SUPPLIERS

Exxon Company, USA	A-7
TOSCO	A-15
Shell Oil Company	A-18
American Petroleum Institute	A-20

USERS

General Motors	A-25
A Major Chemical Company	A-28
Department of Navy	A-29
Electric Power Research Institute	A-32

A limited series of interviews were conducted with potential suppliers and users of synfuel products to sample firsthand the views and projections of industrial players in the synfuels market. Participating firms and organizations are listed in Table A-1. Interviews were conducted at the firms' locations. A set of standard issues was covered at each interview. The responses of each participant are summarized later in this Appendix. The general conclusions and some of the significant points made by the participants are broadly outlined here.

A.1 EXPECTED INVOLVEMENT IN SYNFUEL INDUSTRY

The suppliers generally indicated a broad interest in synfuel technologies because all resources (oil, coal, shale) are limited and each may have constraints to full development so all potential supply technologies must be constantly assessed.

Those technologies that produce products most similar to existing products or are most easily adapted to the present production, marketing, and utilization systems are most favored. In general, shale oil was thought to be most nearly cost competitive and commercial. Crude shale oil will be upgraded and hydrotreated to yield a desirable refinery feedstock. For the foreseeable future, existing refinery capacity will be used for any shale oil production.

Medium-Btu gas from coal is thought to be cost competitive with higher priced imported gas. High-Btu gas (SNG) and coal liquids are generally projected as longer-term potential supplies. Synfuel plants will be located near resources; refineries will be located as they traditionally are--near sources of supply and users.

A.2 SYNFUEL PRODUCTS MARKET

In general, two major trends appear to be impacting the markets that synfuel products may enter. The demand for gasoline appears to be declining because of improved vehicle efficiency, conservation and penetration of diesel fuel. For the liquid fuels, the middle distillates (diesel and jet fuel, home heating oil) will drive the liquid synfuels market over the next few years. The need to find an alternative to oil as a boiler fuel, and the need to secure long-term supplies of chemical feedstocks have generated a great deal of interest in medium-Btu gas supply technologies.

Both suppliers and users view shale oil as a potential premium refinery feedstock--ideal for production of middle distillates. Initially, the shale oil will be marketed to refineries in the Rocky Mountain region until most of the spare refinery capacity is utilized. The next market to develop will be the Midwest, which is projected to have a significant (up to 300,000 BPD) spare capacity over the next 20 years.

The likely uses of medium-Btu gas will be in plants that produce chemical feedstocks and fuel gas for onsite (or nearby) use and in electric utility combined cycle plants.

TABLE A-1. INTERVIEWS WITH POTENTIAL SYNFUEL SUPPLIERS AND USERS

Suppliers	Expected Synfuel Market Participation
Exxon Company, USA Houston, TX	Actively developing shale oil, coal gasification and coal liquefaction.
*TOSCO Los Angeles, CA	Supplier of shale oil feedstock to refiners.
Shell Oil Company Houston, TX	Coal gasification; some interest in oil shale.
American Petroleum Institute Washington, D.C.	Representative of petroleum industry interest.
Users	
General Motors Warren, MI	Liquid transportation fuels, primarily hydrocarbons.
A Major Chemical Company	Gaseous and liquid feedstocks for chemical industry.
Department of Navy Washington, D. C.	Liquid fuels for military equipment; airplanes, ships.
Electric Power Research Institute Palo Alto, CA	Gaseous and liquid fuels for utility boilers.

* Telephone interview

Coal liquids will probably impact the market for heavier fuels--stationary turbines, special diesels, and, potentially home heating oil. (If medium-Btu gas is successful, use of coal liquids as a boiler fuel may be limited.) Methanol from coal is viable as a technology, but there is no marketing infrastructure to handle this product.

A.3 SIGNIFICANT FACTORS IMPACTING THE SYNFUEL INDUSTRY

- Costs of synfuel products versus petroleum and gas.
- Availability of supplies. The need for a secure supply of transportation fuels by the military, the need for long-term supplies of chemical feedstocks by some industries, the general decline in the petroleum resource, the uncertainty in import supplies.
- Changing market patterns and trends (see A.2 above).
- Government participation. The SFC and creation of incentives are necessary but regulations will produce uncertainty and hinder development.

A.4 ANTICIPATED PERIOD OF TIME TO BUILDUP AND ESTABLISH A COMMERCIAL SYNFUEL INDUSTRY

The consensus response of the suppliers was that the total synfuel market may develop less rapidly than the national goal plan; the rate of development will probably be closer to the nominal scenario described in Section 3. The consensus places total production at 1.0 to 1.5 MMBPD by 1990. The suppliers indicated plans for commercial readiness for non-oil shale technologies within the next three to five years.

The major factors impacting the buildup rate include the degree of government support and the effect of environmental attitudes towards industry, especially regarding the Clean Air Act and water regulations.

A.5 SYNFUEL PRODUCTS COMPARED TO PETROLEUM-BASED PRODUCTS

In general, the suppliers take the view that there will be no discernable or significant differences in the refined liquid products produced from synfuels compared to products from petroleum or natural gas. These products from synfuels will be produced to specifications by using conventional, well-known processes. This naturally leads to the consensus among suppliers that no additional or special concerns are warranted regarding synfuel products markets. Some specific points follow:

- For shale oil, there are no compositions unique to shale oil compared to petroleum. The physical and chemical characteristics of synfuel products will be essentially the same as those from refined petroleum products. The products are processed to specifications and the users will identify no differences.

- Concerning the industry's ability to process shale oil (and coal liquids) to acceptable specifications, it is pointed out that crude petroleum, as derived from various locations, exhibits a range of compositions that brackets oil shale. Unacceptable quantities of nitrogen, sulfur and arsenic are removed by upgrading, hydrotreating, or other processing steps. This additional processing or upgrading is a matter of economics. The trend in the U.S. is to upgrade the heavy residuals. Some of the technologies developed for this purpose can be used in the processing and refining of synfuels.

  The users, on the other hand, supplied varying responses to identifying differences between liquid synfuels and conventional products.

- While users expect the suppliers to produce synfuel products to specifications, it is not clear that the current specifications are sufficient to guarantee performance and environmental acceptability. For example, severe hydrotreating may destroy or alter certain characteristics of fuels (e.g., lubricity) so that trade-offs in processing to remove contaminants versus preservation of performance may limit the degree of additional processing.

- Of the synfuel products being considered, coal liquids, if used directly, are perceived as most different from conventional products regarding toxicity and composition.

  The users interviewed are generally involved in tests of various synfuel products for both performance and potential environmental impacts. These tests are expected to determine the degree of additional processing required and the acceptability of synfuel products.

A.6 ANTICIPATED MODIFICATIONS TO FACILITIES OR PROCEDURES FOR MARKETING SYNFUEL PRODUCTS

From the suppliers' viewpoint, no special facilities or procedures are anticipated for the distribution, handling, or storage of synfuels. In general, products will be processed to specifications and no problems over and above marketing of conventional products are expected. Coal liquids, with their highly aromatic contents, are a possible exception and need to be studied.

The users generally see a need for some modification of end use devices. Engines and combustors must be modified to use the synfuels efficiently and cleanly. The users view the process of synfuel product acceptance as one of interaction between users' needs and the costs and capabilities of additional processing by suppliers. For example, transportation fuels are usually qualified or tested for such characteristics as sulfur, nigrogen, trace elements, aromaticity, volatility, octane quality,

and long-term materials compatibility. The fuel-bound nitrogen in shale oil-derived fuels may prove not to affect engine performance at all for nitrogen levels yielding emissions of 1.2 grams per mile, but it may turn out to be too costly to process fuel to meet a standard of 1.0 grams per mile.

Because of the large capital investment, users' consensus is that very few modifications to end use equipment will actually take place over the next 20 years; the primary path to acceptable synfuel use will probably be through refining and processing.

A.7 AWARENESS OF ENVIRONMENTAL ISSUES RELATING TO SYNFUEL UTILIZATION

In general, the suppliers expect to produce most products to specifications such that no environmental problems over and above those present in the marketing of conventional products will be encountered. Some specific points follow:

- Tests indicate that shale oil has the same potential carcinogenicity as some conventional industrial fuels currently in use. Polycyclic aromatic hydrocarbons (PAH's) are found to the same extent in shale oil and crude oil. Hydrotreating can be used to remove PAH's.

- The storage of incomplete refined or upgraded product may present a problem in the disposal of solid wastes from the bottoms in the tank.

- The handling and burning of heavy fuel oils, especially from coal, may be an issue. This material is likely to be more aromatic and toxic; probably carcinogenic. Testing is required.

The users anticipate that handling, distribution, and use of heavy synthetic fuel oils will be an issue. In the utilization of both transportation and boiler fuels, combustion emissions are likely to be the primary constraint. For low-volume specialty chemicals or by-products derived from synfuels, the requirements of the Toxic Substances Control Act, if imposed, would probably keep these products from the market.

SUPPLIERS

Exxon Company, U.S.A.
Houston, Texas

TOSCO
Los Angeles, California

Shell Oil Company
Houston, Texas

American Petroleum Institute
Washington, D.C.

EXXON COMPANY, USA

September 22, 1980

For Exxon:	T. M. Campbell	Technical Coordinator, Synthetic Fuels Dept.
	R. Campion	Environmental Conservation Coordinator, Public Affairs Office
	T. W. Day	Senior Staff Planning Analyst, Corporate Planning Dept.
	W. W. Hesser	Business Development, Synthetic Fuels Dept.
	L. Kronenberger	Regulatory Affairs Coordinator, Synthetic Fuels Dept.
	J. P. Racz	Project Development Manager, Synthetic Fuels Dept.
	R. C. Russell	Director, Environmental Health
For TRW:	E. M. Bohn	
	J. O. Cowles	

1. Expected involvement in synfuels industry:

- Exxon is actively and broadly involved in synfuels from shale and coal. They own a 60% interest in the Colony Oil Shale Project. Exxon is a major participant in an East Texas coal gasification project (based on the Lurgi process) for production of intermediate Btu (IBtu) gas. They are testing a catalytic gasification process for production of SNG on a small pilot unit and are actively developing the Exxon Donor Solvent (EDS) direct coal liquefaction process at their Baytown, Texas R&D center.

- Synfuel products and relative costs estimated by Exxon are shown in Exhibit 1.

- Shale oil

  Probably cost-competitive with crude oil now.

  Raw shale oil is equivalent to low-grade crude. It is aromatic, and contains arsenic, sulfur, nitrogen but has relatively little residual.

  Through coking and hydrogenation processes, raw shale oil can be converted to a premium crude (low in sulfur and nitrogen with no residual). For example, in the Colony project, raw shale oil will be coked, the arsenic removed and the distillates run through a hydrotreating process. This will result in a prime feed for refineries--it should command a higher price than sweet crude.

  Will use existing refinery capacity. May need to modify some refineries for upgrading shale oil. Note that refinery processes are always in evolution just to handle different crudes. So shale oil is just an extension of current technology and practice. Refineries have been continuously developing capability for handling heavier, dirtier crudes as the world's sweet crude supply runs out. Shale crude is right on the trend line for petroleum feedstocks towards heavier crudes.

  Shale oil will produce essentially the same products as currently produced from petroleum (in the sense of ASTM fuel specs).

- Intermediate Btu Gas

  - Technology based on Lurgi is probably cost-competitive now with imported gas but not with lower price regulated gas. Exxon favors Lurgi process.

EXHIBIT I. TYPES OF SYNFUELS AND RELATIVE COSTS

Synfuel	Process	Products	Cost
Shale Oil	Heating Of Oil Shale	Most Similar To Crude Oil	Base
Intermediate Btu Gas (IBG)	Gasification Of Coal	Gas, Largely CO And H_2 For Industrial Fuels Or Chemical Feedstock	Base
Synthetic Natural Gas (SNG)	Gasification Of Coal And Methanation	Gas, Largely Methane For Distribution With Natural Gas	15 to 25% Higher
Methanol From Coal	Gasification And Synthesis	Fuel Grade Methanol And SNG (50/50)	20 to 30% Higher
Other Liquids From Coal	Indirect And Direct Routes	Gasoline, Distillates, Heavy Fuel Oil And Up To 50% SNG	40 to 60% Higher

Used for industrial fuel gas or chemical feedstock--ideal for methanol production.

- Indirect Coal Liquefaction

  Gives products which look like petroleum-based products.

  Fischer-Tropsch gives such a broad range of products--can get 75 percent gasoline.

- Direct Coal Liquefaction

  High fraction of heavy fuel oil products. R&D aims at upgrading to naphtha and middle distillates, minimizing residual.

  The products from EDS for example, are highly aromatic. The heavy portions must be upgraded by hydrogenating or hydrocraking to produce petroleum-like products. The naphtha will process easily to a prime mogas base stock. Products will be more aromatic than petroleum products. While aromatic gasoline is fine, middle distillate products (e.g., jet fuel) may not be acceptable by today's standards without excessive hydrotreating.

2. Synfuel products market:

   - Shale oil will produce a premium refinery feedstock.

   - Intermediate Btu gas plants will most likely serve two end uses; produce industrial fuel gas and chemical feedstock from a single plant. Ideal for methanol production.

   - Methanol major questions are whether or not methanol will emerge as a fuel for both transportation and stationary uses. There is no marketing infrastructure to serve methanol distribution and end-use market. Technically, methanol is a viable fuel. There is not much potential as a blend with gasoline. Can go directly to gasoline from methanol, but this begins to look like indirect liquefaction. Could be used initially in a regional system (fleets, counties, military facility) or as a prime liquid industrial or utility peaking fuel.

   - Coal liquids

     Coal liquefaction produces a high fraction of heavy oils. Actually, probably don't want to make heavy fuels from coal. The traditional market for these fuels would be utilities/ industrial boilers and these are predicted to convert to coal combustion and IBtu gas. Some heavy fuel oil may be

produced in coal conversion plants. This material will be more biologically active than similar boiling range petroleum fractions. It will be used as a single product--not blended.

From EDS, for example, expect to produce fuel for stationary turbines, special diesel (marine) fuel and home heating oil. Actually, for home heating oil, won't meet the API spec on gravity and this will have to be changed or the fuel extensively hydroproduced. Only minor retrofits may be required for home heating applications.

For the EDS process, Exxon is working to minimize the heavy fuel fraction in favor of transportation fuels. Could get all Naphtha and distillates (up to boiling point of 900°-950°F). Options are many but only at the lab stage now.

SASOL for example is predicated on the fact that South Africa must rely on its coal resource base and use existing gasoline powered equipment. Their economy is too small to generate new equipment for methanol for example. These considerations determine the product slate that SASOL produces.

- Projections of demand for synfuel products are given in latest corporate planning summary, "Exxon Company, U.S.A.'s Energy Outlook 1980-2000". Note for the first time, Exxon is looking beyond 1990.

  On projections of supplies, Exxon generally gives a lower picture than DOE.

- While 1980 is a unique year since there appears to be no high peak in summer gasoline demand it is difficult to assess if this is a permanent trend or a temporary response to rising prices. We are in the midst of a cycle now.

  See Exhibit 2 Exxon predicts a decline in gasoline demand to the year 2000. Gasoline and fuel oil are shown as declining faster than the overall petroleum demand. This is due to increased efficiency, conservation in automobile uses, substitution of diesel engines for gasoline engines, and no new oil-fired utility capacity. Distillate products (home heating oil, diesel, jet fuel) and "other" products (petrochemical feedstocks) show a growing demand.

  Petroleum will continue to be used for products where its uniqueness brings highest value i.e., transportation fuels including gasoline.

EXHIBIT II. UNITED STATES PETROLEUM DEMAND BY PRODUCT

	Growth Rates, %/Year			
	60-73	73-80	80-90	90-'00
Mogas	4.1	0.9	(2.5)	(2.1)
Dist.	3.9	—	2.0	2.5
HFO	4.8	(0.2)	(5.4)	(2.9)
Other	5.2	0.9	1.2	0.7
Total	4.5	0.6	(0.8)	—

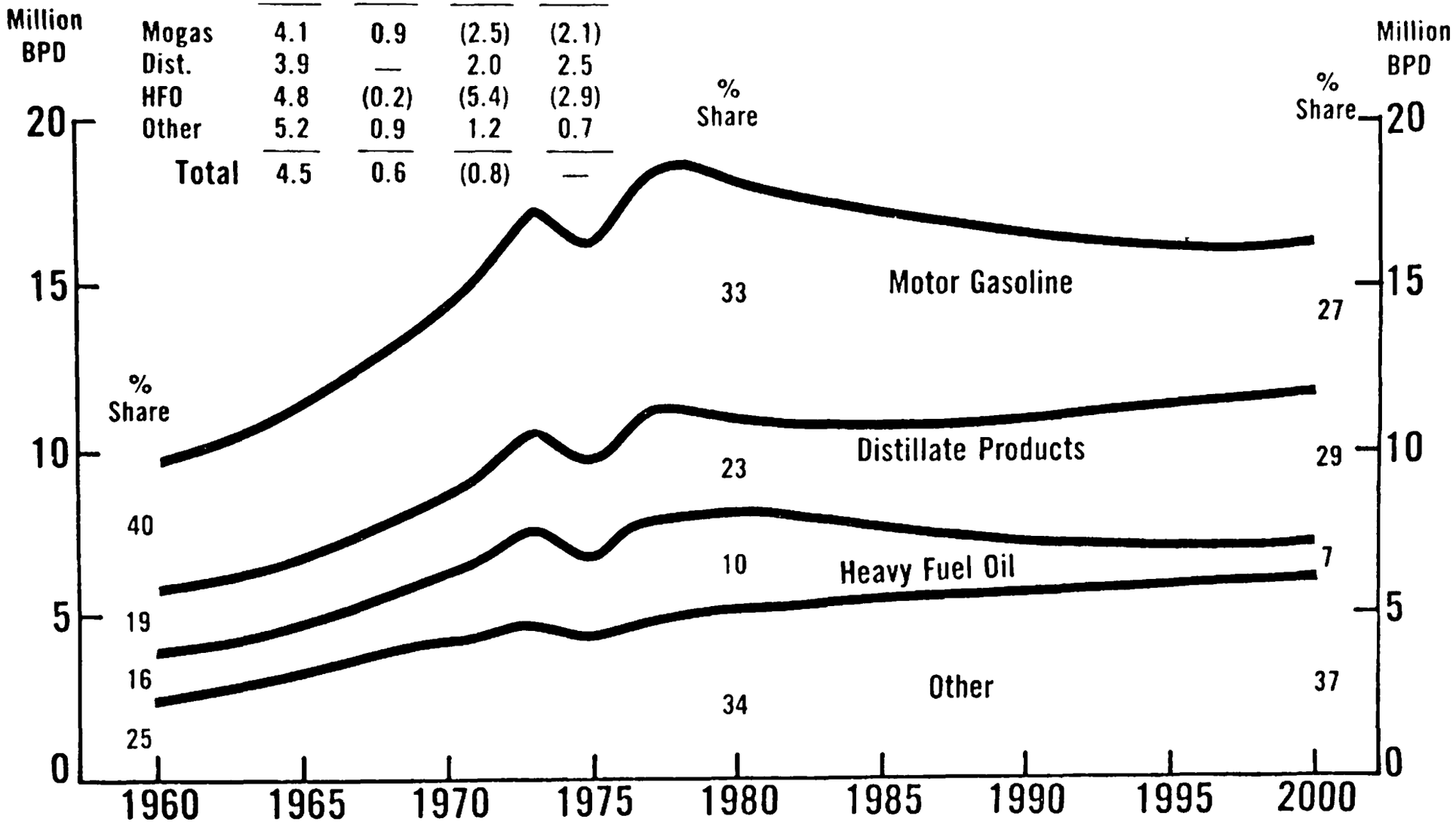

Synfuels will impact the market most readily in the growing market areas, the middle-of-the-barrel products.

3. Significant factors impacting demand for synfuels:

   - Costs see Exhibit 1.

   -* Synfuels are expected to account for difference between projected demand for petroleum products and projected supplies. Domestic oil supplies are projected to decrease from about 10 MMBPD in 1980 to about 6 MMBPD in 2000. Imports of about 8 MMBPD are expected to remain, at best, constant to 2000. Overall demand for petroleum will be about 16 MMBPD in 2000 with oil shale and coal liquids supplying from 2 to 4 MMBPD. The gas supply/demand analysis shows gas demand dropping from 10 MMBPD to about 8 MMBPD in 2000. Domestic production decreases from 8 MMBPD and synthetic gas accounts for 0.5 to 1.5 MMBPD by 2000.

   - Significant government action impacting synfuels:

     incentives

     shale land leasing

     import policy

4. Anticipated period of time to build-up, establish commercial synfuels industry:

   -* Synthetic gas from coal is projected to be commercially available beginning in the mid-80's. Total annual synthetic gas production could range to 0.5 MMBPD by 1990. By 2000, synthetic gas production could range between 0.5 to 2 MMBPD or up to 18% of total supply.

   -* Shale oil and coal liquids will become commercially available beginning in the mid-80's (shale oil will appear earliest, coal liquids later in the 80's). Production will range between 0.7 and 1 MMBPD by 1990. In 2000, synthetics could comprise about 20 to 30% of U.S. oil supply or 2 to 4 MMBPD.

   - The target on EDS is to have enough R&D information by 1983 to design a commerical plant.

---

* From "Exxon Company, U.S.A.'s Energy Outlook 1980-2000" Dec., 1979

5. Synfuel products compared to petroleum based products:

   - Shale oil feedstock to refinery, after hydrotreating, will be considered as a premium feedstock. Products refined from oil shale will not be different from products produced from crude.

   - Coal liquids currently doing tests on EDS product. Each R&D sponsor receives some of the product and tests are underway for end use and combustion tests and for toxicology. Information should become available in 1981.

6. Anticipated modifications to facilities or procedures for marketing synfuel products.

   - No modifications are anticipated other than additional hydro-processing facilities as for example in use of shale oil and lack of marketing infrastructure for a new product like methanol.

   - May need separate system for heavy aromatic products but we have experience with this today.

7. Awareness of environmental issues relating to marketing of synfuel products:

   - Handling and burning of heavy oils may be an issues. This material is likely to be more aromatic and will contain PNA's. Will have to do some testing here. Have handled similar petroleum products and know how. But burning is another story don't know long-term health effects, if any, of combustion products.

   - In the case of shale oil, there is very little residual. It is processed to clean products and looks like conventional petroleum products.

   - For middle distillates (400-650°F cut), knocking nitrogen out of the rings is important. Product may be more aromatic but the customer is used to handling these products. Any contaminants can be removed. Below 400°F cut (gasoline and lighter) no PNA's; below 500°F cut only naphthalene; 4, 5, 6 rings above 700°F.

   - PNA's unleaded gasline, for example, has higher content of PNA's. High, severe reforming adds rings (and hence PNA's) to product. Catalytic converter in car removes them. Removal can be accomplished by additional processing should this be necessary. PNA's in gasoline and synthetics should not be a problem. PNA's that may also result from inefficient burning (e.g., for fuel oil applications) will be removed by conventional emission control devices.

- Methanol has an effect on the optic nerve, otherwise more benign than gasoline, for example. Some studies have shown that methanol spills in water are less of a problem than petroleum. If gasoline gets into lungs--it is an acute problem.

- Foreign (to U.S.) experience on environmental issues will have no real impact on Exxon's programs. Do expect to learn from the SASOL experience.

- As far as meeting current product specifications, don't really anticipate any problems.

8. Suggestions for EPA approach to controlling utilization of synfuel products:

   - No need for new controls for synfuels. See synfuels as evolution of conventional products and regulations on existing products should apply.

   - Concerned that regulation issue may impede development of synfuels industry.

TOSCO

Telephone Interview September 16, 1980

For TOSCO:	G. Ogden	Manager, Supply and Distribution Department
	M. Coomes	Manager, Environmental Health Effects
For TRW:	E. M. Bohn	

1. Expected involvement in synfuels industry:

   - TOSCO is involved in the synfuel industry primarily as a supplier of shale oil feedstock to refiners.

   - TOSCO has a 40% interest in the Colony project; Exxon owns a 60% interest. The TOSCO-II surface retorting process will be used. The product will be a severely hydrotreated shale oil directly suitable for the refinery feedstock market. TOSCO is also involved in the Sand Wash project in Utah but this project is only in the study stage.

2. Synfuel products market:

   - TOSCO's marketing strategy is to enter the market early in the Rocky Mountain region. There is at this time, some spare refinery capacity in this region. In addition, although this region produces petroleum crude for export to other parts of the country, the region is a net importer of refined transportation fuels. Refiners in this region will regard shale oil as a premium feedstock because of the higher yield of middle distillate, and transportation fuel products obtained from refined shale oil.

   - Once the Rocky Mountain area market is satisfied, the next or longer-term market is expected to be in the upper Midwest. Currently, there is about 200,000 BPD open pipeline capacity to refineries in St. Louis, Chicago and Detroit. This is expected to increase to 300,000 BPD open capacity by 1985. The export (from the Rocky Mountain area) market is expected to develop in the Midwest.

3. Significant factors impacting demand for synfuels:

   - Availability of petroleum crude oil, especially as it may be impacted by production from the Overthrust Belt in the western states will impact the market for shale oil. Overthrust production could absorb all in-place pipeline capacity.

   - As long as the U.S. imports oil, there will be a demand for domestic hydrocarbon that will provide some incentive to look at synfuels. National security will always be a consideration.

   - Government incentives are absolutely necessary to accelerate the early development of commercial scale plants. The industry is not capable of providing the capital for such a large investment.

4. Anticipated period of time to build-up, establish commercial synfuels industry:

   - Highly speculative but TOSCO agrees that the Government's target of 500,000 BPD from oil shale by 1992 is reasonable. In-house estimates place national production level at 300,000 BPD by 1990.

5. Synfuel products compared to petroleum-based products:

   - Crude petroleum has a range of compositions that bracket crude shale oil. One exception is the nitrogen content of oil shale. Hydrotreating will remove N compounds (along with sulfur). The arsenic present in oil shale would poison refinery catalysts. The arsenic is removed in a guard bed made up of spent or deactivated catalyst.

There are no compositions unique to oil shale as compared to petroleum.

- As far as end use products are concerned, they will be produced according to specifications; gasoline is gasoline as defined by specifications. One must understand the refinery process and the impact of differences in crude oil feedstocks to appreciate the production of an end-use product. For example, gasoline is produced by blending several process streams to meet a certain set of specifications (aromaticity, viscosity, volatility, etc.). Note--it is not the final product itself that is defined under TSCA for example. It is the chemical substances of the product streams that are listed.

6. Anticipated modifications to facilities or procedures for marketing synfuels products:

   - Oil shale can be distributed in any of several ways. It is more economical to hydrotreat the crude shale oil and then distribute by pipeline.

   - The handling, distribution, and storage of shale oil will be the same as for conventional petroleum feedstock.

7. Awareness of environmental issues relating to marketing of synfuel products:

   - In general, no new controls or regulations will be required for oil shale. The only difference from a marketing standpoint regarding use of shale oil is that there will be an increase in utilization of hydrocarbon products in the Rocky Mountain area.

   - Regarding potential carcinogenicity of shale oil, it looks like it will be bracketed by petroleum crudes. Note--only two different crudes have been tested to date.

     TOSCO is actively involved in toxicity tests on oil shale. (Two reports will be sent to TRW.) Tests on shale oil from the retort indicate that it has the same carcinogenicity as some conventional industrial fuels currently in use. (The characteristics of the fuel oil depends on processing and feedstock used.) As far as polycyclic aromatic hydrocarbons (PCAH's) are concerned, no difference between shale oil and crude oil has been found. Hydrotreating reduces PCAH's in shale oil.

     Carcinogenicity is really an emotional issue. TOSCO finds that shale oil has the same or lesser potential for impact than conventional crude.

8. Suggestions for EPA approach to controlling utilization of synfuel products:

   - Compare hydrotreated oil shale to petroleum crude.
   - No special controls needed.

SHELL OIL COMPANY

September 22, 1980

For Shell:	K. Geoca	External Activities
	C. Jones	Manager, Business Center for Synfuels
For TRW:	E. M. Bohn J. O. Cowles	

1. Expected involvement in synfuels industry:

   - Shell Oil Company has not really been involved actively in synfuels until now. Have had some peripheral R&D activity and have an interest in:

     Tar sands in Canada

     Oil Shale -- Modest interest

     Coal as a general resource

     Shell has a significant position in coal resources in the U.S. and this has led to synfuels interest.

   - Shell is now acquiring coal gasification technology from Shell-Koppers and expects to be on leading edge of second generation technology.

     Studies now underway by EPRI should show Shell-Koppers technology more efficient than Texaco.

2. Synfuel product market:

   - Will produce medium Btu gas from Shell-Koppers process.
   - Market, in order of penetration will probably be:

Power Plant fuel

Industrial boilers

Feedstock for chemicals, methanol

Feedstock for liquefaction of coal

Coal liquefaction (Mobil-M)

3. Significant factors impacting demand for synfuels:

   - SFC formation Energy Security Act
   - Windfall profits tax and impact on investment in synfuels
   - Price of crude oil

4. Anticiapted period of time to build-up, establish a commercial synfuels industry:

   - Shell-Koppers pilot plant in Amsterdam now. By 1984, 1000 T/day demonstration plant planned.

5. Synfuel products compared to petroleum-based products:

   - No difference for Shell-Koppers process considered here

6. Anticipated modifications to facilities or procedures for marketing synfuel products.

   Not applicable

7. Awareness of enviornmental issues relating to marketing of synfuel products:

   - Expect to comply with regulations as they are now known.

8. Suggestions for EPA approach to controlling utilization of synfuel

   None

AMERICAN PETROLEUM INSTITUTE (API)

September 5, 1980

For API:	B. R. Hall	Synthetic Fuels Director
	B. L. Petersen	Senior Analyst for Synthetic Fuels
	D. B. Disbennett	Health Affairs Coordinator
	E. Rucker	Environmental Affairs Assistant Director
	P. J. Fuller	Regulatory Analyst
For TRW:	E. M. Bohn	
	R. S. Iyer	

1. Expected involvement in synfuels industry:

   - The oil industry is interested in those technologies that are most directly transferrable to the current manufacturing and distribution system. Oil is a finite resource and they feel that they need to be involved in a broad array of potential opportunities (e.g., SRC's, EDS, etc.), constantly assessing the economics and technology.

   - As far as timing for synfuel industry build-up, some at API feel that TRW's nominal scenario looks very reasonable. They feel oil shale will come along earliest the technology is further along and the economics look better than the rest now. Major unknown is the development costs as they are impacted by environmental legislation not yet promulgated. Probably won't get to 500,000 BPD by 1987 permits will hold up development.

   - Synfuel plants will be located near the resource. Refineries will be located as they have been traditionally near supply or near population density. The selection of a certain technology (e.g., gasifier type) is highly site specific. Note second generation gasifiers such as TEXACO and CONOCO are being selected now.

2. Synfuel products market:

   - In the case of oil shale, syncrude will be sent to a refinery and a complete slate of products will be produced. The military market is forced into securing transportation fuels, especially jet fuel from oil shale. At this moment, there is a big need for testing of synfuel products--this will be largest demand for products over first few years.

- The consumer will know no difference between traditional petroleum fuels and synfuels. There is no identifiable "demand" for synfuels. All toxic components will be removed before consumer sees products. All products will meet current specs. Such things as aromatics, carbon, trace elements, will be controlled.

3. Significant factors impacting demand for synfuels:

   - A synfuel industry has to be developed even though it may strain our resources. As far as captial goes we can do it if the need is there. In the sense of a national effort or emergency, we can do whatever we want.

   - Conservation has impacted the demand for fuels. This is a direct result of price increases and the current economic recession. The long-term trend, even with conservation will be one showing an increase of 1 percent per year, somewhat below traditional trend. The fact is, we are dealing with a finite resource and an increasing world demand, especially in the third world countries.

   - Government incentives and regulations will be a big factor. OPEC price control can be overcome by price guarantees. Beyond the Synthetic Fuels Corporation, one can't predict what will happen. Synfuels will be treated as any other business investment opportunity. It is a matter of short- vs. long-term and synfuels are definitely a long-term opportunity. Most of the large oil companies will be synfuel producers when it happens, they intend to be there.

   - Government regulations produce another series of unknowns in the investment decision. They raise the margin for success. Government is not consistent. On the EMB, we don't need a new agency rather, revise existing legislation and regulations.

4. Anticiapted time to build-up, establish commercial synfuels industry:

   - The TRW nominal scenario looks very reasonable; API agrees with it. As far as build-up flattening out after initial plants are built, API feels most development data will be obtained over next 5-10 years and the industry may have no need to pause. The build-up depends very directly on government participation and the availability of foreign crude oil at a competitive price.

   - Environmentally, the Clean Air Act is key--water is next. How these areas are going to trend as far as business encouragement goes over the next few years is a key issue. TSCA may also be key depending on what the implementing regulations say.

5. Synfuel products compared to petroleum-based products.

- As far as physical and chemical characteristics of synfuel products are concerned, they will be esstentially no different than the refined petroleum-based products. After refining and upgrading, all products will meet product specifications.

- All petroleum crudes are different and the processing is tailored for each crude. Product specifications are satisfied by various degrees of hydrotreating. This additonal processing or upgrading is a matter of economics. The trend in the U.S. is to upgrade the bottom of the barrel. The need for additional hydrogen is the same problem posed for synfuel upgrading. Processing and refining of synfuels will be very analogous to conventional petroleum processing problems.

  Note the characterization of petroleum has been going for years and it will continue. The processes will continue to be improved as a more complete basic understanding of the nature of petroleum is obtained.

- Technically, the industry can meet product specifications for synfuel-based products. The market place will handle this aspect well the buyer will specify and the supplier will meet the specs. Price of products will depend on specifications. One concern may be the impact EPA may have on new specifications.

6. Anticipated modifications to facilities or procedures for marketing synfuel products:

   - As far as synfuel products are concerned, through the year 2000, there will be no change in end use or utilization devices and equipment one must accept this fact. Products will be produced for this equipment according to ASTM specifications. One possible exception is the nitrogen content which is under study now. Another exception may be methanol production. Some equipment modification would be needed for methanol. We might see fleet cars running on 100% methanol in the 1990's.

   - As far as handling and distributing synfuel products, there will be no risk for end-products since these will meet current specifications. All potential contaminants and toxic material can be removed in processing.

   - Transporting syncrude may be a problem. The syncrude will be hydrotreated to the point that is meets specs for pipelining (corrosion, pumping, pour point specs). It is a matter of economics and the entire system must be considered.

   - In the case of some products that may not be refined (e.g., boiler fuels), they are being characterized now. Problems will be identified and handled. The products will meet specs.

7. Awareness of environmental issues relating to marketing of synfuel products:

   - For end use products after refining and upgrading products specifications will be met. Environmental risks will be the same as for current products. The assumption (in the draft report) that toxic feedstock going in means toxic product coming out is wrong.

     Economics considered, processing will be tailored to meet product specs. One cannot assume that there is significant difference between regular and synfuel-based end products.

   - Important environmental issues:

     Work place (synfuel plant) exposure is most important.

     The storage of incomplete refined or upgraded product may present a probelm in the disposal of solid waste from the bottoms in the tank. The industry is dealing with problem the regulations have just come out.

     Spills are expected to pose no additional problems for synfuels; API plans to work on problems associated with synfuel spills.

   - See Exhibit 3 Toxicological Assessment of Retorted Shale Oil Refinery Products and Streams a summary of tests being sponsored by DOE, DOD and API.

8. Suggestions for EPA approach to controlling utilization of synfuel products:

   - When considering toxicity compare synfuels to petroleum products. Talk about relative impacts, not absolute. Do tests on both petroleum and synfuels.

   - TSCA could be a real stopper for industry. Is there any reason to consider TSCA for synfuel products that meet specs? API intends to make recommendations to EPA on need for Premanufacture Notices. An undue burden is placed on industry by requiring all test data during the industry development. Testing should be done concurrently with development.

   - Regulations must make common sense. They must not impede development.

EXHIBIT III. CONJOINT TOXICOLOGICAL ASSESSMENT OF RETORTED SHALE OIL REFINERY PRODUCTS AND STREAMS

Tests / Shale Oil Samples	Acute Oral	Acute Inhalation	Acute Dermal	Skin Irritation	Eye Irritation	Skin Sensitization	Subacute Dermal	Chronic Inhalation	Chronic Ingestion	Carcinogenesis Dermal	Mutagenesis Microbial	Mutagenesis In Vitro Mammalian	Mutagenesis In Vivo Cytogenetics	Mutagenesis Dominant Lethal	Teratogenesis	Immunology	Behavioral Toxicology	Analytical Comprehensive	Analytical PNA's only
Retort Oil	DOE B	D	DOE D	DOE B	DOE B	DOE B	D	D	D	API A	DOE A	DOE A	D	D	D	D	D	API A	API A
Hydrotreat Product	DOE B	D	DOE B	DOE B	DOE B	DOE B	D	D	D	API A	DOE A	DOE A	D	D	D	D	D	API A	API A
#6 Fuel Oil	DOE A	DOE D	DOE A	DOE A	DOE A	DOE A	D	D	D	API A	DOE A	DOE A	DOE A	D	DOE A	D	D	API A	API A
Gasoline Stock	D	D	D	D	D	D	D	D	D	D	DOE D	DOE D	D	D	D	D	D	API A	D
JP-4 (pre-acid treat)	D	D	D	D	D	D	D	D	D	D	DOE A	DOE B	D	D	D	D	D	API A	D
JP-5 (pre-acid treat)	D	D	D	D	D	D	D	D	D	D	DOE A	DOE B	D	D	D	D	D	API A	D
JP-8 (pre-acid treat)	D	D	D	D	D	D	D	D	D	D	DOE A	DOE B	D	D	D	D	D	API A	D
DFM (pre-acid treat)	NAVY A	NAVY A	NAVY A	NAVY A	NAVY A	NAVY A	NAVY A	NAVY A	D	API A	DOE A	DOE A	DOE A	D	DOE A	D	NAVY A	API A	API A
JP-4 (final)	NAVY A	NAVY A	NAVY A	NAVY A	NAVY A	NAVY A	NAVY A	NAVY A	D	B	DOE A	DOE A	B	D	DOE A	D	NAVY A	API A	D
JP-5 (final)	NAVY A	NAVY A	NAVY A	NAVY A	NAVY A	NAVY A	NAVY A	NAVY A	D	B	DOE A	DOE A	B	D	D	D	NAVY A	API A	D
JP-8 (final)	NAVY A	NAVY A	NAVY A	NAVY A	NAVY A	NAVY A	NAVY A	NAVY A	D	B	DOE A	DOE A	B	D	D	D	NAVY A	API A	D
DFM (final)	NAVY A	NAVY A	NAVY A	NAVY A	NAVY A	NAVY A	NAVY A	NAVY A	D	API A	DOE A	DOE A	DOE A	D	DOE A	D	NAVY A	API A	API A
Acid Sludge	D	D	D	D	D	D	D	D	D	D	DOE A	DOE B	D	D	D	D	D	API A	D
Retort Oil Water (Separation)	D	D	D	D	D	D	D	D	D	D	DOE A	DOE B	D	D	D	D	D	API A	D
Water (From stripper)	D	D	D	D	D	D	D	D	D	D	DOE A	DOE B	D	D	D	D	D	API A	D

A = Highest Priority
B = High Priority
D = Deferred until further information obtained

API = American Petroleum Institute
DOE = Department of Energy

USERS

General Motors
Warren, Michigan

A Major Chemical Company

Department of the Navy
Washington, D.C.

Electric Power Research Institute
Palo Alto, California

GENERAL MOTORS

October 1, 1980

For GM:	J. M. Colucci	Department Head, Fuels Lubricants Department
For TRW:	E. M. Bohn J. O. Cowles K. Lewis	

1. Synfuel products market:

   - The aim of GM's research organization, including the Fuels and Lubricants Department, is to assure that GM products will operate on available fuels, now and in the future. In 1971, GM began looking at non-traditional fuels as potential supplement or replacement for petroleum-derived fuels. Alcohols were first. Their primary interest is future hydrocarbons. Some tests on oil shale distillates (for gas turbines) have been done. GM expects to receive samples from Gulf, Ashland, and Exxon for coal liquids testing early next year.

   - Among the auto industry, GM has the lead in application and testing of synfuels. Other than some work by Ford on alcohol fuels, there is very little else outside of GM going on in this arena.

   - GM has a very good line of communication with the oil companies/ suppliers of synfuels. A group, the Coordinating Research Council, made up of representatives from the oil, auto and equipment manufacturing companies, has also been active with work on alternative fuels. The CRC is headed by A. Zengel and is headquartered in Atlanta.

- Projection of synfuel market:

  Oil shale is competitive now with imported oil.

  Demand for diesel fuel will increase; gasoline demand will decrease. GM projects that 20 percent of its fleet will be dieselpowered by 1985 compared to 5-7 percent now.

2. Significant factors that will impact supply of synfuels:

   - Great dependence on OPEC.

   - Among the synfuels that will be produced, diesel fuel will be competing with other middle distillates such as jet fuel as the demand for diesel fuel increases.

3. Synfuel products compared to petroleum-based products:

   - For the most part, the user will not identify any differences between petroleum products and synfuels. For example, the SUN Oil Toledo refinery has produced some gasoline derived from tar sand feedstock. It is used just as regular gasoline is used no one knows the difference.

4. Anticipated modifications to facilities or procedures for utilization of synfuel products:

   - In general, suppliers can process synfuel feedstocks to yield any specified product. The amount of processing is mostly a matter of economics. This is DOE's feeling fuels can be made to specs. But GM feels that processors and users should meet part-way for optimum utilization of synfuels. If a producer is only making a product to certain specifications, some of the advantageous properties of synthetics may be neglected. For example, for the high content of aromatics present in coal liquids, one may want to develop a higher compression engine for more efficient operation.

   - The balance between additional processing of synfuels versus engine modification is a matter that is being investigated by experimentation. As a first step, GM will look at a less refined or processed synfuel product. A series of tests will be scheduled beginning with fuel characterization e.g., aromaticity, sulfur, volatility, octane quality, etc. Next, tests of performance will be made in a single cylinder engine. After these initial tests, GM will begin to iterate with the supplier on fuel specifications e.g., a tighter spec on sulfur may be requested. At the same time, GM begins to look into possible engine modifications to utilize fuel effectively. Eventually, full scale multi-cylinder tests are conducted and actual auto engines are tested. Longer range testing is required

for such things as materials compatibility. It is this whole system approach to development of synfuel products that is required.

- GM is willing to look at less refined, cheaper fuels but ultimately EPA standards will determine whether or not a product can be used. For example, consider the fuel-bound nitrogen in shale oil. Although engine performance may not be affected by a nitrogen level yielding emissions of 1.2 grams/mi., it may turn out to be too costly to process the fuel to meet a standard of 1.0 gram/mi.

- Although we do not know the ultimate effect on costs of refining and/or engine modifications, refining and processing will probably be the primary path to acceptable use of synfuels. For example, in the case of diesel particulates, although GM has done much work in this area, better or improved processing is needed. More definitive health effects data would help.

5. Awareness of environmental issues relating to utilization of synfuel products.

   - GM believes synfuels use constraints are economics, emissions, and safety but that economics as affected by regulation on emissions and safety of synfuel production and use is the primary constraint. Specifically, EPA and other Federal regulations will be the prime driver in the gasoline/automotive synfuel system.

   - Issues will be generally the same as for conventional fuel use. Some points:

     Arsenic in shale if it carries over to product used in cars, it will poison the catalytic converter catalyst. Would have disposal problems.

     Since 1974 EPA has regulated additives to unleaded gasoline. Synthetics will probably be impacted by this regulation.

     Note that we can make highly aromatic fuels with no PNA's but the combustion of this fuel will yield PNA's in the microgram/mi range. Catalytic converters can remove PNA's but how much can be tolerated? PNA's will be an issue and the burden will fall, at least in part, on the auto manufacturer.

     Note that the issue of ethyl alcohol as an additive to unleaded gasoline was waived as a result of benign neglect. But evaporative emissions are high (10-25% vapor pressure increase) and should be addressed.

A MAJOR CHEMICAL COMPANY

September 17, 1980

For Chemical Company:	Manager of Petrochemicals
For TRW:	J. Cotter J. Cowles

1. Synfuels Products Market:

   - Identification of major synfuel product suppliers:

     The most probable synthetic feedstock used in the chemical industry will be medium-Btu gas;* they do not know whether they would make their own gas or buy it. They would not use SNG under any circumstances. Naphtha and gas oil from shale oil refining should be good cracking feeds. Later (in the 90's), LPG from coal liquefaction, together with coal-derived naphtha and BTX will become available for chemical feedstocks. They do not understand why anyone would build a Fischer-Tropsch plant.

   - Projected demand for synfuel products:

     The growth rate of synfuels as chemical feedstocks won't be all that high. They think less than 50 percent of chemical feedstocks will be synthetic by 2000, since the industry can't convert any faster. In addition, the recent 6-10 percent growth rate of the chemical industry is almost sure to slow down to 3-4 percent by 1990, as natural products become more competitive with manufactured chemicals and products.

2. Significant factors that will impact conversion to synfuels as feedstock:

   - The availability of existing feedstocks is a key issue. Tennessee Eastmen probably does not have any good options to their current coal-to-syngas effort. Both natural gas and resids (for gasification) could be interruptible feedstocks for them. They (Chemical Company) are in much better shape on feedstock contracts.

   - The competitive prices for synthetic LPG, naphtha, etc., are not yet determined, but both price and forecasted availability will determine the switch to other feedstocks.

---

*The advantages for oxygenated chemicals look really good.

Synfuel products compared to petroleum-based products:

- Synthetic LPG will be just like it come out of the ground. Acid gas purification of medium Btu gas will take out all the trace contaminants, so that is will look like regular syngas.

- Coal liquefaction products, like naphthas, may be different, and may contain PNA's and substituted phenols.

Anticipated modifications to facilities as procedures for utilization of synfuel products:

- They are already working on plant concepts (in R&D) that would use synthetic feedstocks. Their first synfuel-tailored process will be ready in the late 80's.

- Synthetic methanol, as a fuel, could be used right now, if necessary.

Awareness of environmental issues relating to synfuel utilization as a feedstock:

- Although some synfuels may have PNA's, etc., they face this situation right now with resids from heavy liquid pyrolysis. These products are now sold on the open market as a No. 6 fuel oil blend, since they have low sulfur content. They do not think any extra environmental controls are needed. Good practice right now dictates that these materials must be well contained, since they have to be handled hot.

- They are under the impression that neither synfuels nor their derived by-products would be subject to TSCA. If they did have to requalify any derived by-products, low-volume specialty chemicals might be discarded from market consideration.

- They feel that the extensive conversion which is characteristic of chemical operations (as compared to refining) would also convert hazardous constituents found in the feedstocks.

They do not see any justification for EPA to regulate synfuel utilization.

DEPARTMENT OF NAVY

September 5, 1980

For the Navy: Dr. A. Roberts

For TRW:

E. M. Bohn
R. S. Iyer
K. R. Lewis

1. Synfuel products market:

   - The Defense Production Act provides for 3 billion dollars in purchase guarantees for synfuels. These incentives, along with those of the SFC, are expected to stimulate the development of a commercial synfuels industry and to assure fuel supplies for DOD. DOD buys on the open market through a central military procurement office. All purchases are made according to military specification (mil-specs). It is expected that synfuels will be procured in the same manner with suppliers identified as the traditional fuel suppliers.

2. Significant factors that will impact supply of synfuels:

   - Government incentives, especially price guarantees.

   - Availability is a national security issue. Longer term depletion also is a problem. Equipment (ships, planes) being designed now to operate on conventional engine technology. The need is for traditional hydrocarbon fuels. Alcohol, methane, etc. cannot be used here.

3. Synfuel products compared to petroleum based products:

   - The characteristics of synfuels are being studied now and some differences have been identified (e.g., high nitrogen content in shale-derived fuel). At this point, it is not known if processing or upgrading can be used to meet specifications. Have only looked at one source and one process (Paraho/SOHIO test).

   - The Navy (as also other branches of DOD) has a very active R&D program focused on characterizing synfuels for end-users primarily engines. This program includes laboratory testing to quantify test fuel chemical and physical properties and to identify adverse effects upon system performance. Fleet tests are planned as fuel samples become available. Health, safety and environmental concerns will also be addressed.

4. Anticipated modifications to facilities or procedures for utilization of synfuel products:

   - For the next 10-20 years, current equipment (planes, ships) will continue in use. The capital investment in these equipment is large and the fuel must fit the equipment. Minor modification, some retrofits are possible.

- Note that the buyer's fuel specifications have evolved over the years around a stable, traditional source of crude. These specs are not designed to pick-up problems among different crudes and certainly not for a new product like synfuel. For example, in the case of Alaskan crude, had to hydrotreat more than other crudes and this destroyed lubricity of product. This produces a direct effect on fuel pumps in aircraft engines. Fuels will continue to be modified. The synthetics will definitely pose a greater problem. For example, none of the military specs account for nitrogen, and it is known that nitrogen causes gumming. This has not been a problem before.

- Toxicity if related to trace elements might be taken care of (eliminated) by drawing up certain specifications.

- From utilization point of view, the supplier must meet specs including health hazard specifications. The engine manufacturers must quality engines for the military spec fuels.

- The Navy is interested in all synthetic fuels. If they meet specs, will use.

- Oil shale products appear more nearly able to contribute at this point costs are competitive and the industry is developing faster than others. The middle distillate yield from oil shale is good also jet and diesel fuel.

5. Awareness of environmental issues relating to utilization of synfuel products:

   - Haven't discovered any significant issues. Work is under way and continuing.

   - Have not identified any special need for controls or procedures yet.

6. Suggestions for EPA approach to controlling utilization of synfuel products:

   - Use petroleum as a baseline when evaluating health effects of synfuels. Should only be concerned over results that show "worse" than conventional products. Then, look at controls for these cases.

ELECTRIC POWER RESEARCH INSTITUTE

September 29, 1980

For EPRI:	R. Wolk	Director, Advanced Fossil Power Systems Department
For TRW:	J. Cotter	

1. Synfuel Products Market:

   - Projected demand for synfuel products:

     Base load: the big use will be medium-Btu gas, which (with combined cycle operations) will be competitive with pulverized coal-fired boilers. The Southern California Edison plant at Coolwater is going ahead.

     Intermediate load: The utilities can't afford big expeditures for this level; liquid products in combined cycle are likely.

     Peaking: probably gas turbines with methanol or upgraded liquids.

     Petroleum liquids will dry up as a utility fuel as early as 1990, and certainly by 1995. Although We have a temporary excess of natural gas, that's going to disappear too.

   - Identification of major synfuel product suppliers

     Oil companies are most likely suppliers of liquids, but utility consortiums can't be ruled out--the advantage are substantial for utility financing.

     Utilities will probably make their own medium-Btu gas; traditional utility suppliers like CE, B&W, and Westinghouse might be potential sources.

     Shale oil liquids will be the first on line, although much of the shale oil product split will be diesel fuels.

     Coal liquids must be on line by 1990 to take up the petroleum short fall.

2. Significant Factors that will impact supply of synfuels:

   - Resource availability picture looks to be improving; lignite yields are looking better (from gasification and liquefaction).

- Improved gasification and liquefaction technology should yield more products from coal.

- Costs: $6-7 million Btu is a competitive price, coming from a $2-3 billion, 60,000-BPD direct liquefaction plant.

Synfuel products compared to petroleum-based products:

- Distilled shale oil products will look most like petroleum products

- Coal liquids (without upgrading) will have high sulfur, nitrogen, and carbon ratios.

- Compatibility is in question.

Anticipated modifications to facilities or procedures for utilization of synfuel products:

- Shale oil resids can be used in turbines--EPRI demonstrated that at Long Island Lighting plant test. Water injection moderates NO_x emissions.

- Utilities will use the lowest grade fuel that will combust and meet regulations; advanced turbine designs will be needed; Westinghouse has demonstrated that special combustor designs can burn liquids down to 10% H content.

- Resid coal liquids must be segregated; won't blend with petroleum oils.

Awareness of Environmental Issues Relating to Synfuel Utilization

- They recognize that pipelining, barging, and tank car transport could be a problem; EPRI has just issued a contract to Gulf to look at potential emissions.

- Don't know real risks of handling these materials at a power plant.

- They are not excited about SRC liquids--think that their S&N content is higher than they might expect from some other liquefaction processes.

    Liquid fuels will certainly need some form of combustion modification; they did staged combustion with the SRC II test at Con Ed.

    No. 6 type fuels may require ESP use.

Distillate products may be favored for lower NO_x, ash generation.

6. Suggestions for EPA approach to controlling utilization of synfuel products:

EPA should not attempt to duplicate what DOE may do relative to synfuel utilization regulation.

APPENDIX B

COMMERCIAL COAL LIQUEFACTION AND GASIFICATION PROJECTS

TABLE B-1. COMMERCIAL COAL LIQUEFACTION AND GASIFICATION PROJECTS

PROCESS	PROJECT AND CONTRACTOR	MAJOR PRODUCTS	COMMERCIAL CAPACITY	COST	LOCATION	STATUS	COMMERCIAL START
Sasol[2]	Fluor and Crow Indians	SNG Liquids	65,000 BBL/D	--	Montana	--	--
Lurgi Sasol[1]	East Texas Project, EXXON Coal USA	Med. Btu Gas & Liquids	Med. Btu Gas: 400 MMSCFD Liquids: 10,000 BBL/D	$2 billion plus	Cherokee & Rush Co., Texas	Supply Demand Studies of Feasibility	--
Lurgi Sasol[1]	South African Coal, Oil and Gas Corp. Ltd.	SNG, Liquids	--	$2.8 billion	South Africa	Near Completion	1980
Lurgi Sasol[2]	Texas Eastern & Texas Gas	SNG, Liquids	50,000 BOE Equivalent	--	Henderson, Kentucky	Site is being Negotiated	--
Texaco[2]	Texaco & Houston Natural Gas	Methanol Fuel Gas	2 plants producing total of: Methanol 25,000 B/D Med. Btu Gas 300 MMSCFD	$500 MM per plant	Convent, Louisianna	Feasibility Studies	--
Texaco[1]	Methanol from Coal, Wentworth Bros.	Methanol	7.5 MM gpd = 179,000 BBL/D	$2.2 billion	--	Planning and Negotiation	--
Koppers-Totzek[1]	Synthetic Fuel Liquefaction Plant, W.R. Grace & Co.	Methanol, Carbon Dioxide	Methanol: 5,000 TPD CO_2: 6,000 TPD	--	--	--	--
Undecided	EXXON Wyoming[1] Project, EXXON Coal U.S.A.	SNG, Methanol	--	--	Gillete, Wyoming	Planning	--
Mobil M-[3] Gasoline	Mobil Oil Co. & New Zealand Liquid Fuels Trust Board	Gasoline LPG	12,500 BBL/D	$500-650MM	New Zealand	Negotiation	1984-1985
Lurgi[1]	Panhandle Eastern Wyoming Project Panhandle Eastern & Peabody Coal Co.	SNG	125 MMCFD Capacity	$1 Billion	Douglas, Wyoming	Proposal	--

TABLE B-1. (CONTINUED)

PROCESS	PROJECT AND CONTRACTOR	MAJOR PRODUCTS	COMMERCIAL CAPACITY	COST	LOCATION	STATUS	COMMERCIAL START
Lurgi[1]	Peoples Gas Dunn Co. Project, Natural Gas Pipeline Co. of America	SNG	250 MMSCFD	$1 Billion	Dunn County, No. Dakota	--	--
Lurgi[2]	Rocky Mountain Energy Corporation	SNG	250 MMSCFD	--	Southern Wyoming Cherokee Coal Reserves	Feasibility Study	Late 1980's
Lurgi[1]	Great Plains Gasification Project	SNG	137.5 MMCF/SD (expandible to 250 MMCF/D)	$890 MM	Mercer County, No. Dakota	Negotiation	--
Lurgi[1] (Tentative)	Mountain Fuel Supply Co., SNG Project	SNG	125 MMSCFD expandable to 250 MMSCFD	--	Emery, Utah	Start-up planned for 1988	1990
Lurgi[1]	Burnham Coal Gasification Project, El Paso Natural Gas Co. & Ruhrgas A.G.	SNG	Initial: 72 MMSCFD Expanded: 288 MMSCFD	$42 Million for 72 MMSCFD Plant	New Mexico	Negotiation Stage	--
Texaco[4]	Texaco & Transwestern Pipeline	SNG	250 MMSCFSD	--	Buffalo, Wyoming	Feasibility Study	--
Undecided	TENNECO[1], SNG from Coal	SNG	--	--	Wibaux, Montana	Acquiring Coal Reserves Necessary to fuel plant	--
Undecided	SNG from Coal[1] Texaco Inc., Transwestern Pipeline Company	SNG	125 to 250 MMSCFSD	--	Lake Desmet, Wyoming	Planning	--
HYGAS[6]	Montana Power Co., & Montana-Dakota Utilities Air Force	SNG	35-100 MMSCFSD	$300-500MM	--	--	--
U-Gas[1]	Industrial Fuel Gas Demonstration Plant, Memphis Light, Gas & Water	Medium Btu Gas	175 MMSCFD	--	Shelby County, Tennessee	Detail Design	--

(continued)

TABLE B-1. (CONTINUED)

PROCESS	PROJECT AND CONTRACTOR	MAJOR PRODUCTS	COMMERCIAL CAPACITY	COST	LOCATION	STATUS	COMMERCIAL START
Texaco[1]	EBASCO Services	Synthesis Gas	--	--	Louisianna	Preliminary Engineering Design	--
Texaco[1]	Chemicals from Coal Tennessee Eastman Company	Synthesis Gas for Captive Use	--	--	Kingsport, Tennessee	--	1983
Shell-Koppers	--	--	1,000 TPD Coal Feed	--	Netherlands	Demonstration Plant Under Design	--
Undecided	Low/Med. Btu Gas for Multi-Company Steel Complex	Low/Med But Gas	--	--	Northern Indiana	Planning	--
Undecided	Columbia[1] Coal Gasification	High Btu Gas	--	--	Illinois	Planning	--
Undecided	DeSota County[1], Mississippi Coal Project	SNG	--	--	--	Feasiblity Study	--
HYGAS[1]	KEN-TEX Project, Texas Gas Transmission Corp.	High Btu Gas	250 MMSCFD	--	Illinois Basin	Planning	--
Texaco[1]	--	Ammonia	1200 TPD	$518 MM	Baskett, Kentucky	Detailed Design	Results of Demo Plant Testing could have major impact on commercial start
Texaco[1] (Tentative)	Combined Cycle Coal Gasification Energy Centers	SNG, Fuel Gas, Electrical Power	2 plants each producing: SNG: 33 MMSCFD; Fuel Gas: 42 MMSCFD; Power 300 MW	$416 Million	Cameron, Missouri	Construction scheduled for mid-1981	1984

(continued)

TABLE B-1. (CONTINUED)

PROCESS	PROJECT AND CONTRACTOR	MAJOR PRODUCTS	COMMERCIAL CAPACITY	COST	LOCATION	STATUS	COMMERCIAL START
Texaco[2]	Central Maine Power Company	Electric Power	48,000 KW	--	--	Planning	1987
Texaco[7]	Texaco & Southern California Edison	Electric Power	90 MW 1000 TPD Coal	$300 MW	Barstow California	Preliminary Design	1983

REFERENCES

1. Cameron Synthetic Fuels Report, The Pace Company Consultants and Engineers, March 1980.
2. Synfuels, McGraw-Hill, May 9, 1980.
3. D. J. Deutsch, A Big Boost for Gasoline from Methanol, Chemical Engineering, pp. 43-45, 4/7/80.
4. Synfuels, November 9, 1979.
5. Synfuels, April 4, 1980.
6. Synfuels, December 7, 1979.
7. Synfuels, January 4, 1980.

APPENDIX C

COOPERATIVE AGREEMENTS AND FEASIBILITY STUDY GRANTS FOR SYNFUELS

COOPERATIVE AGREEMENTS

TECHNOLOGY	REQUESTED FROM DOE	DESCRIPTION/SITE
Coal Liquids		
Texas Eastern Synfuels	$24,300,000	Texas Eastern Synfuels proposes to construct a coal liquefaction facility that will produce the equivalent of 56,000 barrels of oil per day. Texas Eastern Synfuels is a joint venture of Texas Eastern Corporation and Texas Gas Transmission Corporation. The proposed project is a Fischer Tropsch plant--like the SASOL facility in South Africa--that would convert approximately 28,000 tons per day of coal into a mixture of transportation fuels, synthetic natural gas (SNG), and chemicals. Approximately 44 percent of the output is SNG (145 mmSCF/D); about 30 percent is transportation fuel. The test chemicals site is near Hendersen, Kentucky.
High-Btu Gas		
Great Plains Gasification Associates	$22,000,000	The project will use a Lurgi pressurized, fixed-bed gasification process with Lurgi methanization requiring 14,000 tons/day of lignite coal to produce 137.5 mmCF/day of synthetic gas, 93 tons/day of ammonia and 85 tons/day of sulfur. The facility will be sited in the Beulah Hazen area of Mercer County, North Dakota and has a total capital requirement of $1.5 billion.
Wycoal Gas	$13,155,000	Wycoal plans to construct a facility using Lurgi and Texaco gasification units to process 16,000 tons of sub-bituminous coal daily to produce high-Btu gas. All liquid by-products will also be gasified. The facility is to be located in Douglas, Wyoming. The proposed work will involve developing a definitive basis for plant design, estimating costs, securing permits and approvals, obtaining financing, and identifying long-lead delivery items. There is a market for the SNG via pipeline system, owned by the participants, to the midwest. The project would produce the equivalent of 51,000 barrels of oil per day.

FEASIBILITY STUDY GRANTS

TECHNOLOGY	REQUESTED FROM DOE	DESCRIPTION/SITE
Coal Liquids		
Cook Inlet Region Anchorage, Alaska 99509	$3,900,000	Feasibility study of producing 54,000 barrels per day of methanol from low sulfur coal using Winkler gasifier and ICI methanol synthesis. Site: West side of Cook Inlet, Alaska
W. R. Grace Denver, Colorado 80223	$ 786,477	Stage III of a feasibility study of a coal sourced methanol plant using a Koppers-Totzek gasifier. Site: Moffat County, NW Colorado
Clark Oil & Refining Milwaukee, Wisconsin 53227	$4,000,000	Feasibility study of producing synthesis gas from coal, steam, oxygen, and methanol from synthesis gas using a Koppers-Totzek gasifier, ICI, and the Mobil-M process. Site: South Illinois
Houston Natural Gas/Texaco Houston, Texas 77001	$3,260,000	Fourteen-month feasibility study of producing fuel grade methanol from coal using Ziegler coal deposits. Site: Covent, Louisiana
AMAX, Inc. Grenwich, Connecticut	$2,190,000	Feasibility study of a coal-to-methanol plant producing 14,910 barrels per day using Koppers or Lurgi gasifiers. Site: Duluth, Minnesota
Dakota Company Bismark, North Dakota 58501	$4,000,000	Feasibility study for constructing an 85,000-barrel/day coal-to-methanol plant using Lurgi gasifier and Lurgi methanol synthesis. Site: Dunn, North Dakota

(continued)

FEASIBILITY STUDY GRANTS (CONTINUED)

TECHNOLOGY	REQUESTED FROM DOE	DESCRIPTION/SITE
Republic of Texas Coal Co. and Mitchell Energy Corporation Houston, Texas 77002	$ 808,781	Feasibility study of gasification of in-situ deep Texas lignite and conversion of remaining medium-Btu synthesis gas to methanol and high octane gasoline. Site: Texas Gulf Coast
Hampshire Energy Milwaukee, Wisconsin	$4,000,000	Ten-month feasibility study of converting 15,000 tons/day of coal to 20,000 barrels/day of gasoline. Site: Gillette, Wyoming
High-Btu Gas		
Crow Tribe of Indians Washington, D.C. 20036	$2,729,393	Nine-month feasibility study, high-Btu gas (Lurgi process - SNG) at Crow Reservation, Montana. Site: East of Billings, Montana.
Texas Eastern Synfuels, Inc. Houston, Texas 77001	$3,018,000	Nine-month feasibility study, high-Btu gas (Lurgi process - SNG, methanol) at San Juan County, New Mexico. Site: East of Navajo Indian Reservation
Low/Medium-Btu Gas		
Florida Power St. Petersburg, Florida 33733	$1,380,796	Twelve-month feasibility study of medium-Btu gas combined cycle. Site: Pinellas County, Florida
General Refractories Bala Cynwyd, PA 19004	$ 922,555	Nine-month feasibility study of low-Btu industrial fuel gas. Site: Florence, Kentucky
Central Maine Power Augusta, Maine 04336	$3,624,558	Fifteen-month feasibility study of combined cycle, medium-Btu gas at Sears Island, ME. (Process: Texaco gasifier) Site: Waldo County, Maine

(continued)

FEASIBILITY STUDY GRANTS (CONTINUED)

TECHNOLOGY	REQUESTED FROM DOE	DESCRIPTION/SITE
EG&G Wesley, Massachusetts 02181	$4,000,000	Feasibility study for a medium-Btu gasification facility producing combined cycle power and methanol. Choice of process technologies between Koppers-Totzek or slagging Lurgi. Site: Fall River, Massachusetts
Philadelphia Gas Works Philadelphia, PA 19102	$1,168,108	Twelve-month feasibility study of medium-Btu gas (Process: TRD). Site: Philadelphia, Pennsylvania
Celanese Corp. Dallas, Texas 75247	No Cost	Feasibility study to determine the technical and economic viability of developing a carbon monoxide and hydrogen syngas from either a high-Btu coal or a Texas lignite. Site: Near Bishop, Texas
Union Carbide/Linde Division Tonawanda, New York 14150	$3,945,676	Eighteen-month feasibility study of low-/medium-Btu gas. Site: Texas City, Houston, Texas
Oil Shale		
Gary Energy Corp. Fruita, Colorado 81521	$3,009,399	Feasibility study for upgrading crude oil shale to gasoline jet fuels, DFM, and residual using UOP hydro-processing and hydro-cracking. Site: Fruita, Colorado
Transco Energy Co. Houston, Texas	$3,778,267	Eighteen-month feasibility of 2000-BPD (or larger) module of a 50,000-BPD plant. Site: Lewis County, Kentucky
Tar Sands		
Natomas Energy Co. San Francisco, California 94108	$ 357,511	Eight-month feasibility study of extracting 20,000 barrels/day of oil from domestic tar sands-bitumen. Site: Site may be in Utah or California
Standard Oil of Indiana Chicago, Illinois 60601	$0	Feasibility study of a 50,000-barrel/day tar sands Bitumen facility. Site: Sunnyside, Utah

(continued)

FEASIBILITY STUDY GRANTS (CONTINUED)

TECHNOLOGY	REQUESTED FROM DOE	DESCRIPTION/SITE
Unconventional Gas		
Acruex Corporation Mt. View, California 94042	$ 440,261	Feasibility study of anaerobic digestion of sewer water to obtain methane. Site: Possibly Oakland, California
Seneca Indian Nation Salamanca, New York 14779	$ 896,638	Feasibility study of the recovery of natural gas from Devonian shales - vertical wells. Methane from Devonian shale. Site: Salamanca, New York
Republic of Texas Coal Co. and Mitchell Energy Corp. Houston, Texas 77002		Feasibility study of gasification, in-situ deep Texas lignite, and conversion of remaining medium-Btu synthesis gas to methanol and high octane gasoline. Site: Calvert, Robertson County, Texas
Mountain Fuel Supply Co. Salt Lake City, Utah 84139	$1,810,762	Two-year feasibility study of unconventional natural gas in the Pinedale field. Product is natural gas and condensate. Site: Sublette County, Wyoming
Peat		
Minnesota Gas Co. Minneapolis, Minnesota 55042	$3,996,554	Nineteen-month feasibility study for the production of high-Btu substitute natural gas from peat. Site: Minnesota
Shale Liquid Upgrading		
Union Oil Energy Mining Los Angeles, CA 90017	$4,000,000	Feasibility study for operation of a 10,000 BPD upgrading plant producing premium quality syncrude. Site: Grand Valley, Colorado

(continued)

TECHNOLOGY	REQUESTED FROM DOE	DESCRIPTION/SITE
Unconventional Gas		
U.S. Steel Corporation	$ 600,000	U.S. Steel Corporation proposes to build a collection and compression system to capture methane from a mine pre-drainage program. The gas, currently being vented, will be injected into an interstate pipeline system for sale. The project will produce the equivalent of 200 barrels of oil per day. Site is Oak Grove, Alabama.
Coal Oil Mixture		
Banklich Corporation	$ 989,500	Banklick Corporation proposes to design and construct A Coal Mining Mixture (COM) preparation plant on a site on Blount Island, Florida owned by the Jacksonville Port Authority, and to market the products. In this proposal, the approach is to first grind the coal, then mix it with oil and pulverize the result, and, finally, to mix the product more thoroughly using ultrasonic agitators. A COM prepplant is relatively simple and, in addition to the above equipment, consists of coal storage and handling equipment (including a coal pile), oil and COM piping and storage hardware, and associated hardware. Coal would be delivered by rail. The project will produce 6,000 barrels per day.

APPENDIX D

EXISTING MARKETING SYSTEM FOR PETROLEUM AND NATURAL GAS PRODUCTS

TABLE OF CONTENTS

		Page
D.1	PETROLEUM PRODUCT DISTRIBUTION AND USE PATTERN	D-4
	D.1.1 Product Transportation Systems	D-4
	D.1.1.1 Product Pipelines	D-7
	D.1.1.2 Waterborne Transportation	D-13
	D.1.1.3 Truck Transportation	D-13
	D.1.1.4 Railroads	D-16
	D.1.2 Storage	D-18
	D.1.3 End Uses	D-20
D.2	NATURAL GAS DISTRIBUTION AND USE PATTERN	D-20
	D.2.1 Sources of Natural Gas	D-22
	D.2.2 Gas Supply System	D-22
	D.2.2.1 Gathering, Transmission, and Distribution . .	D-22
	D.2.2.2 Gas Flow	D 26
	D.2.2.3 Storage	D-28
	D.2.3 Natural Gas End Uses	D-28
	D.2.3.1	D-31
D.3	PETROCHEMICALS	D-31
	D.3.1 Background	D-32
	D.3.2 Major Petrochemicals	D-36
	D.3.2.1 Sources	D-36
	D.3.2.2 Transportation	D-39
	D.3.2.3 Benzene Storage	D-41

D.3.3 Benzene End Use D-42

D.4 SOURCES OF POLLUTANT EMISSIONS TO THE ENVIRONMENT FROM CONVENTIONAL FUELS TRANSORT AND STORAGE D-45

D.4.1 Transportation Modes Used for Conventional Fuels . . . D-45

D.4.1.1 Pipelines D-45
D.4.1.2 Water Carriers D-47
D.4.1.3 Tanker Trucks D-49
D.4.1.4 Railroads D-50

D.4.2 Product Storage D-50

REFERENCES D-51

FIGURES

Number		Page
D-1	Petroleum Flow Diagram, 1978	D-5
D-2	1978 Crude Oil Movement	D-6
D-3	Petroleum Refineries in the United States and Puerto Rico	D-8
D-4	1974 Refined Petroleum Products: Consumption and Refinery Capacity by States	D-9
D-5	Petroleum Administration for Defense Districts	D-10
D-6	Petroleum Products Pipeline Capacities (Thousands of Barrels Daily, as of December 31, 1978)	D-11
D-7	Commercially Navigable Waterways of the United States	D-13
D-8	Refined Petroleum Products Supplied by Type and End Use Sectors	D-21
D-9	Major Natural Gas Pipelines (March 31, 1980)	D-25
D-10	National Gas Flow Patterns	D-27
D-11	Location of Underground Gas Storage	D-29
D-12	The U.S. Petrochemical Industry 1978	D-35
D-13	The Flow of Petrochemicals to the Motor Vehicles Industry	D-37

TABLES

Number		Page
D-1	Petroleum Product Transportation Methods	D-12
D-2	Interdistrict Movements of Petroleum Products by Tankers and Barges for First Quarter 1978	D-15
D-3	Tank Car Movements	D-17
D-4	Nationwide Inventory and Storage Capacities	D-18
D-5	Storage Capacity by PAD District	D-19
D-6	Marketed Production of U.S. Natural Gas 1979	D-23
D-7	Gas Utility Industry Miles of Pipeline and Main by Type and by Region 1979	D-26
D-8	U.S. Natural Gas Storage Volumes and Capacities	D-30
D-9	U.S. Natural Gas Consumption 1978	D-32
D-10	Gas Utility Large Volume Sales, by Type of Industry and by Division, 1978	D-33
D-11	Primary Petrochemicals Ranked by Volume of Production	D-34
D-12	U.S. Production of Selected Petrochemicals Ranked by Volume	D-38
D-13	Regional/State or Territory Production of Benzene 1979	D-40
D-14	U.S. Shipment of Crude Products from Coal and Petroleum Tars - Total Tons Shipped by Transportation Mode in 1972	D-42
D-15	Benzene Consumption in the U.S. by EPA Regions 1979	D-43
D-16	U.S. Consumption of Benzene and its Major Derivatives by Selected EPA Regions	D-44
D-17	Hydrocarbon Emission Factors for Petroleum Liquid Transportation Sources	D-46
D-18	Liquid Pipeline Accident Summary 1979	D-48

This appendix assesses the marketing and transporting systems in commerce today for petroleum and natural gas products, petrochemical products, and by-products. It identifies the current market infrastructure in relation to crude product transport, storage, refining, and upgrading; product and by-product distribution and storage; product and by-product consumption; and the environmental impacts resulting from the combustion of these products and by-products.

The purpose of this appendix is to identify the current marketplace and shipment and storage systems that ultimately will be used for the mix of conventional and synfuel-derived products and by-products. Current methods used by industries for distribution, storage, and consumption of these products are assessed as completely as possible where adequate resource data were documented and/or obtained from the respective industries. This assessment provided the background for the assessment of the likely shale oil- and coal-derived products and by-products use patterns presented in Sections 3 and 4.

D.1 PETROLEUM PRODUCT DISTRIBUTION AND USE PATTERN

This section discusses the following broad categories of petroleum products: gasoline, middle distillates (e.g., jet fuel, kerosene, distillate fuel oil), residual fuel oil, and liquefied petroleum gases (LPG).

Figure D-1 is an overview of the "petroleum flow" from the crude stage to the refinery and finally to the consuming sector. It shows that the current domestic crude oil supply is significantly augmented by imports, and supplemented somewhat by natural gas plant liquids (NGPL) input, other hydrocarbon input, and processing gain. Plant condensate imports and unfinished oil imports also contribute to total refinery input. Total refinery output plus NGPL direct use and refined product imports constitute the total refined products supplied (Reference 1).

D.1.1 Product Transportation Systems

Petroleum moves from production areas to refining centers and finally to marketing areas and consumers through a complex network of pipelines, barges, tankers, tank cars, and tank trucks. Essentially all crude oil must be refined before end use. Crude petroleum normally is transported to refineries as directly and cheaply as possible. Pipelines and ocean carriers constitute the bulk of crude petroleum transport. Although somewhat limited with respect to route flexibility, cost efficiency makes them the most attractive methods (Reference 2). A fairly extensive crude pipeline system exists in the U.S., but some coastal refinery facilities are not accessible to the primary crude pipelines. These facilities are serviced by other modes of transportation, e.g., trucks, water carriers, and rail. Figure D-2 shows the primary crude oil movement pipelines in the U.S. today.

Pipelines alone transport more than 70 percent of the crude oil transported in the U.S. today (Reference 3). Primarily they are servicing

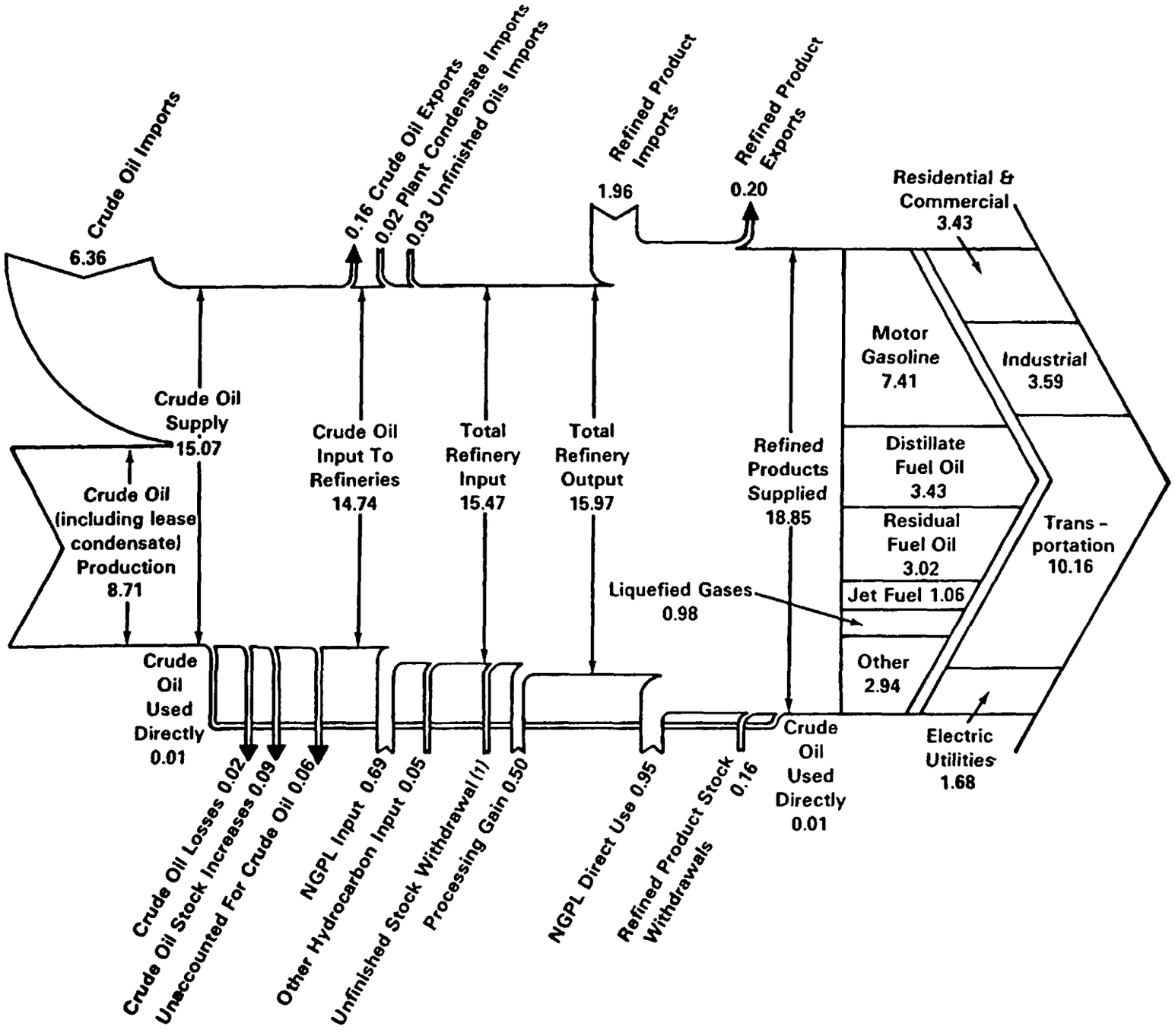

Figure D-1. Petroleum Flow Diagram, 1978 (Million Barrels Per Day)

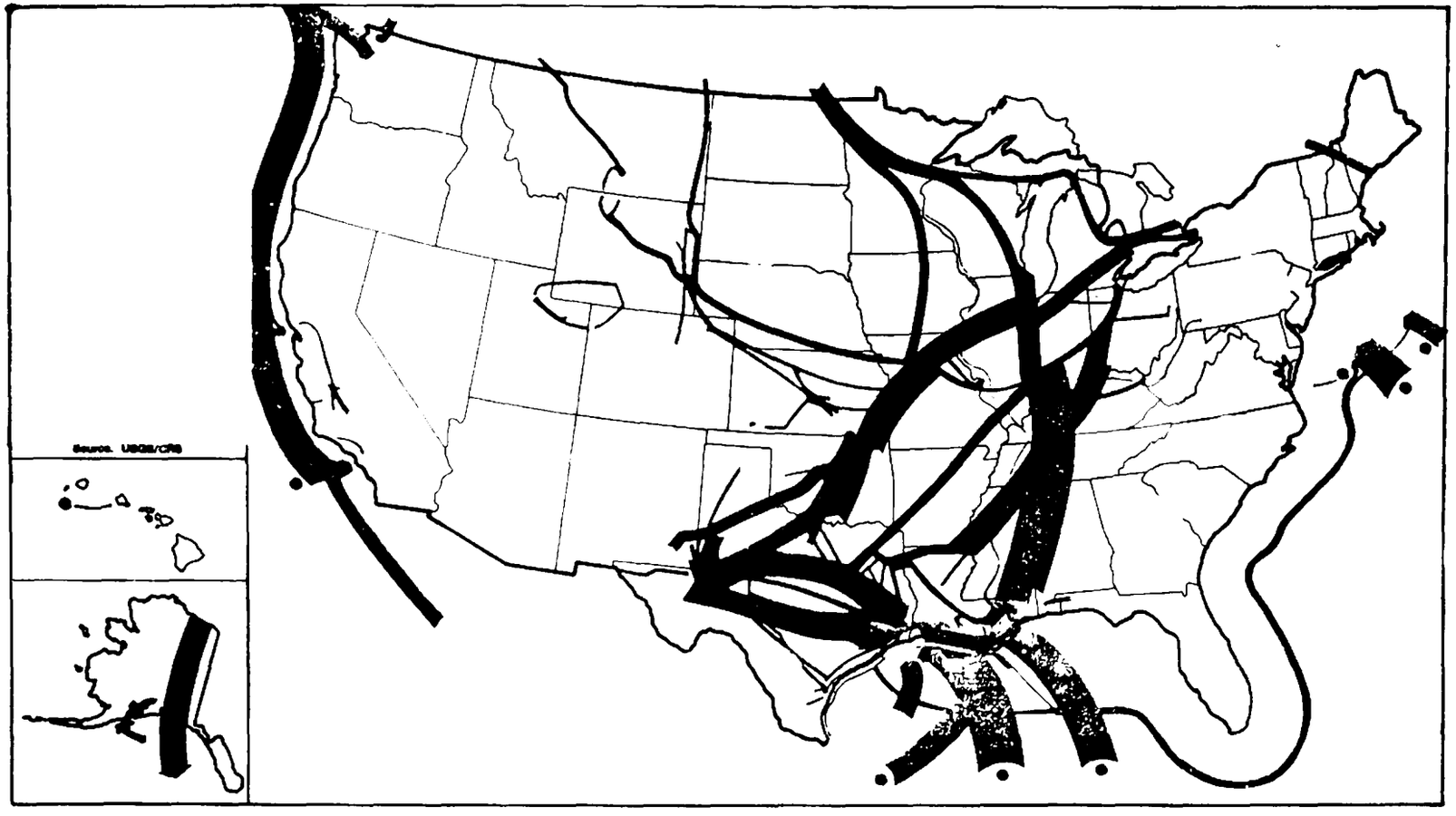

Figure D-2. 1978 Crude Oil Movement

only the South Central, parts of the Southeastern, Mountain, Great Lakes, and the upper Great Lakes regions in the U.S. However, petroleum product pipelines are dispersed throughout the refinery areas to accommodate petroleum refineries as much as possible. Petroleum refineries are concentrated in practically all states in the South Central, Southeastern, Northeastern, Great Lakes, Western, and Northwestern regions. Figure D-3 illustrates petroleum refinery locations in the United States and their relative capacities (Reference 4). These refineries are expected to handle a mix of input consisting of syncrude. A complete listing of refineries in each state is documented in Oil and Gas Journal, March 24, 1980.

If the crude oil movement shown in Figure D-2 is superimposed over the refinery locations, certain fairly obvious trends appear. Coastal areas that also are producing areas handle the bulk of refinery activity. The Gulf coast area is the receiving point for the bulk of foreign imports and significant amounts of local crude. Although much of the crude is refined in the Gulf Coast area, large amounts are pipelined to the Great Lakes industrial area for refining. Some crude from Canada is also piped down into the Great Lakes Region. California serves as a refining center for Alaskan crude shipped by tanker, and for local crude pipelines in the west. East coast refineries receive crude almost exclusively from ocean-going tankers. As is most apparent in the east, the end-use consumption requirements of many states are much greater than their refinery capacity. Figure D-4 illustrates this imbalance.

Consequently, refined petroleum products generally flow to the consumers in the north and east via pipelines, water carriers, motor carriers, and railroads.

Much of the data regarding the movement of crude and petroleum products is tabulated according to Petroleum Adminstration for Defense (PAD) Districts. Figure D-5 shows this geographic breakdown.

D.1.1.1 Product Pipelines

Most product pipelines are common carriers and, as such, are subject to Interstate Commerce Commission (ICC) and Federal Energy Regulatory Commission (FERC) regulations. Anyone meeting the pipeline's tariffs and regulations and requesting shipment should be eligible for service, contingent upon scheduling. Normal pipeline specifications may include pour point, viscosity, and minimum shipment size. These specifications help facilitate an optimum flow rate and minimum interface contamination (Reference 5,6). Petroleum product pipelines carry mostly light products--gasoline, heating and fuel oils, LPG, kerosene, and jet fuel (Reference 3). They are dispersed throughout regions in the U.S. with primary concentration east of the Mississippi to accommodate petroleum refineries and major end use consumers (see Figure D-6). These product pipelines are expected to service the synfuel industries discussed in Section 3.

An aggregate volume breakdown of petroleum products transported in the United States gives pipelines about a 37 percent share. This share is

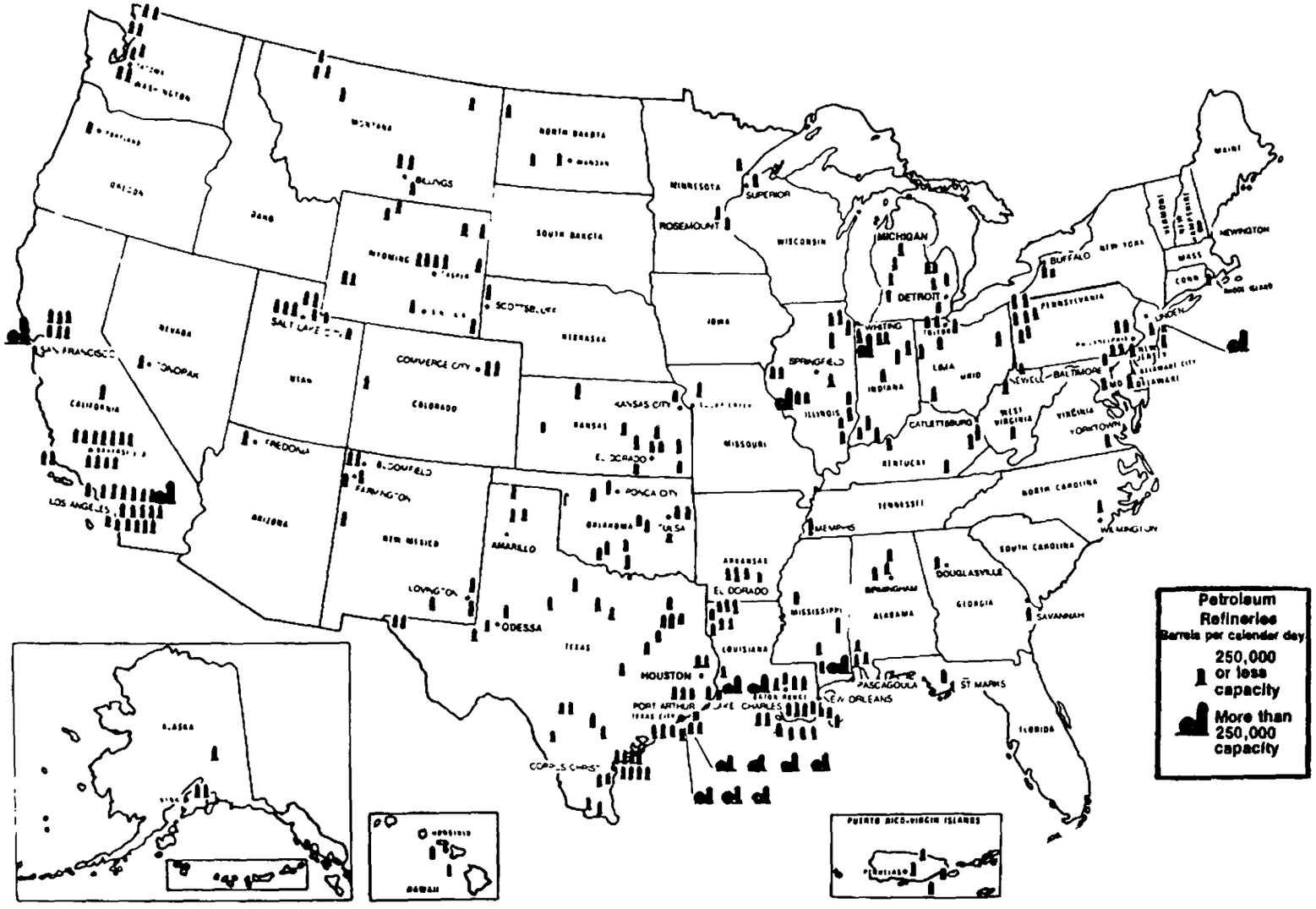

Figure D-3. Petroleum Refineries in the United States and Puerto Rico
(As of January 1, 1978)

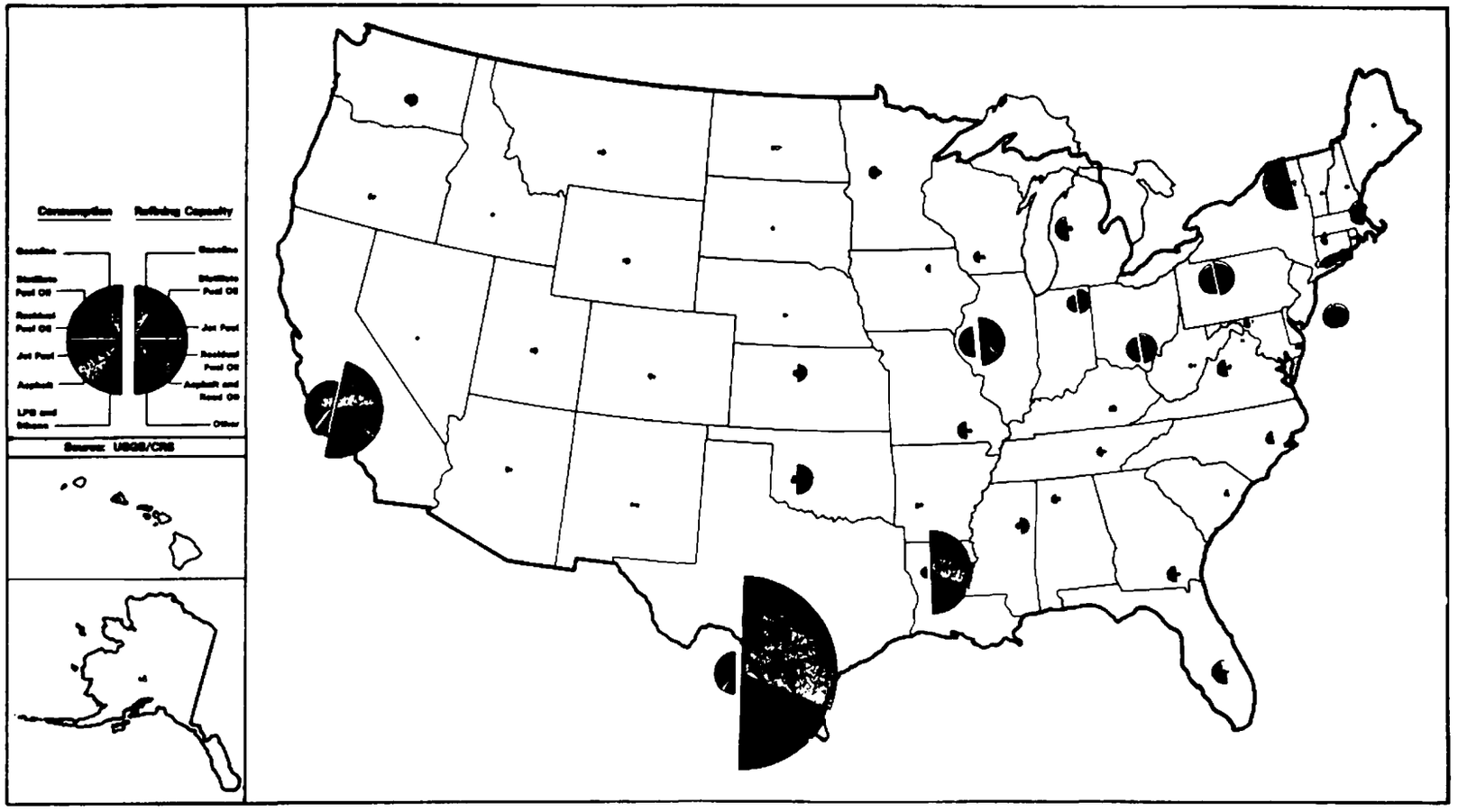

Figure D-4. 1974 Refined Petroleum Products: Consumption and Refinery Capacity by States

Figure D-5. Petroleum Administration For Defense Districts

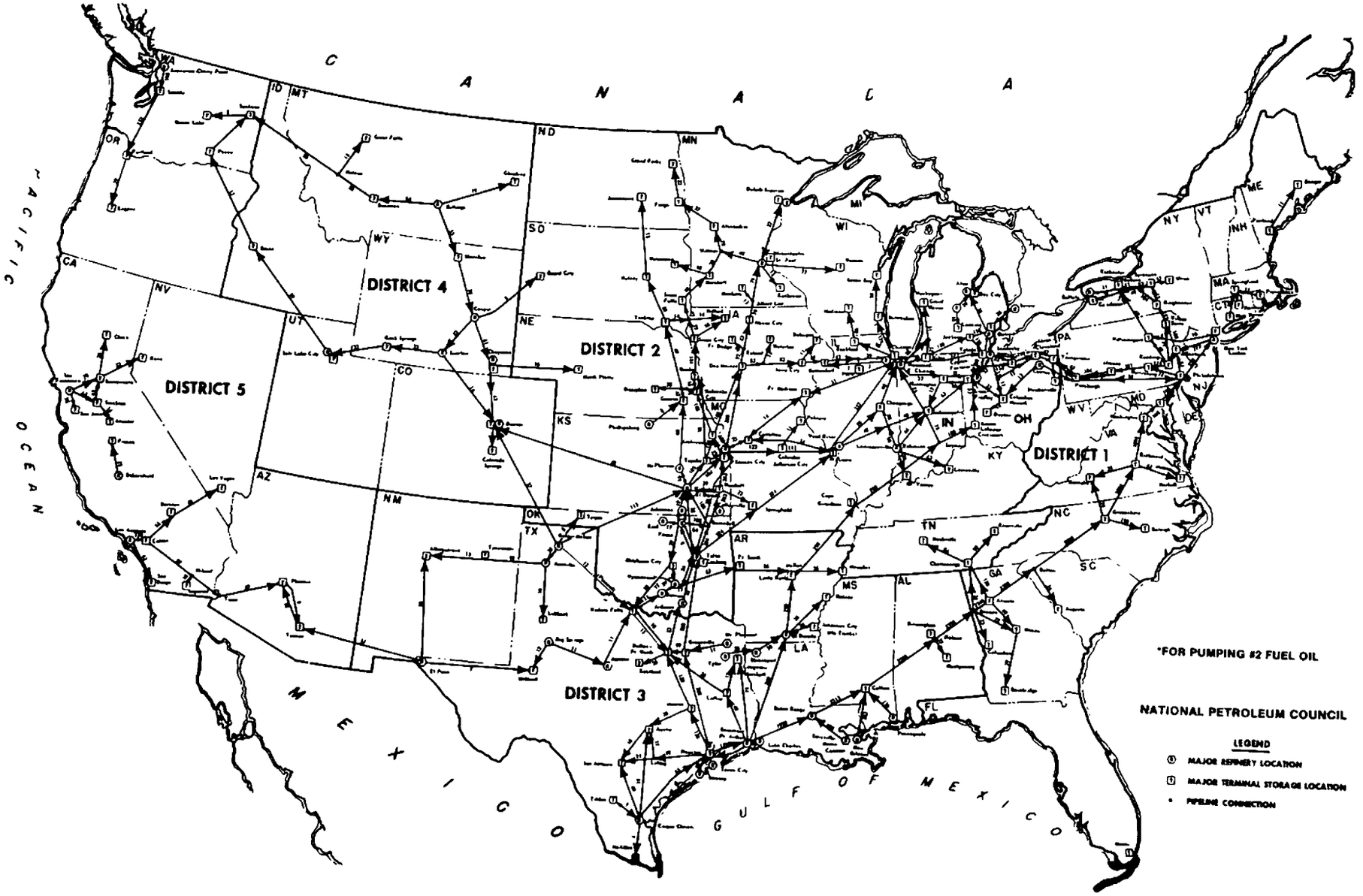

Figure D-6. Petroleum Products Pipeline Capacities (Thousands of Barrels Daily, as of December 31, 1978)

roughly equal to trucks (37 percent), which are used for shorter hauls and heavy products. A summary of the "tons carried" and "percent of total" transported though pipelines in 1950, 1960, 1970, and 1977 is shown in Table D-1.

TABLE D-1. PETROLEUM PRODUCT TRANSPORTATION METHODS

	Pipelines		Water Carriers		Trucks		Railroad		Total
Year	Tons[a]	Percent of total	Tons[a]	Percent of total	Tons[a]	Percent of total	Tons[a]	Percent of total	Tons[a]
1950	52.7	12.75	185.2	44.85	130.8	31.66	44.4	10.74	413.1
1960	140.0	21.31	244.2	37.17	242.5	36.93	30.2	4.59	656.9
1970$_p$	333.1	31.12	286.4	26.75	425.2	39.72	25.8	2.41	1,070.5
1977[p]	526.0	36.56	361.7	25.14	524.6	36.46	26.4	1.84	1,438.7

[a]Tons rounded to nearest million.

[p]preliminary.

Source: Adapted from Association of Oil Pipelines, Shifts in Petroleum Transportation, 1979, Table 3, and previous issues.

In comparing the quantities of petroleum product movement by pipeline between PADD's, the Gulf Coast (PADD 3) far surpasses all other PAD districts as the point of origin of interdistrict product movement. About 2.646 MMBPD of product originates in this district and is transported by pipeline to three other PADD's. PADD's 1, 2, and 5 receive 1.944 MMBPD, 0.655 MMBPD, and 0.047 MMBPD, respectively (Reference 7). The East Coast is the destination of nearly two-thirds of the total interdistrict movement, or 3.174 MMBPD. As synfuel products become available, some of this product movement is likely to come from coal-derived liquid products produced in Region III after 1987.

PAD District 3 surpasses all other districts in shipment of gasoline (1337 MBPD), distillate fuel oil (640 MBPD), jet fuel (221 MBPD), natural gas liquids (192 MBPD), and kerosene (640 MBPD) (Reference 8).

PAD District 1 receives the greatest quantity of most of the products shipped from PADD's 2 and 3; gasoline (1117 MBPD), distillate fuel oil (543 MBPD), jet fuel (171 MBPD), natural gas liquids (130 MBPD), and kerosene (29 MBPD) (Reference 8). PAD District 2 receives the largest share of petroleum products through pipelines: gasoline (392 MBPD), distillate fuel oil (205 MBPD), jet fuel (52 MBPD), natural gas liquids (158 MBPD), and kerosene (8 MBPD) (Reference 8).

D.1.1.2 Waterborne Transportation

Waterborne transportation is typically broken down into two types: domestic traffic and foreign traffic. Domestic traffic includes all movement between points in the U.S. and Puerto Rico, generally along coastal routes and within the 25,000 miles of commercially navigable inland waterways (Reference 9). Figure D-7 illustrates the extent of our river, canal, and intracoastal waterways, and channel network. The commercial waterway system stretches up into the Great Lakes and covers the entire East Coast. Recently there has been some significant waterborne movement of crude from Alaska along the West Coast (see Figure D-2). Domestic movement is primarily by barge (moved by towboat or tugboat), and lake and coastal tanker. Tank barges are second only to pipeline in the volume of petroleum moved (Table D-1).

Barges generally range in capacity from 1,000 to 3,000 tons, with tugs and towboats moving flotillas of up to 200,000 tons. Recent rapid growth of inland waterborne transportation has resulted in significant equipment investment and, consequently, a relatively modern fleet.

Ocean-going barges are becoming more popular, and their use is anticipated to increase in the future. These large barges function much like self-propelled coastal tankers and are likewise constrained by U.S. port size limitations.

Domestic refineries were designed to maximize production of gasoline and other high-priced products. Consequently, the U.S. is forced to import residual fuel oil in large quantities via ocean tanker (Reference 9). The imports currently being transported are expected to be displaced to some extent by synfuels. Generally, pipelines do not carry heavy products such as residuals. Thus, domestically, barges and tankers often complement rather than compete with pipelines in moving heavier products (Reference 9).

Waterborne movements are summarized in Table D-2. For more detail refer to the National Petroleum Council, Petroleum Storage and Transportation Capacities - Waterborne, Vol. V, December, 1979 (Reference 9). The Gulf Coast apparently serves as the only significant point of origin for interdistrict waterborne petroleum product shipments, with the East Coast receiving the largest share (Reference 6).

Gasoline (50 percent), distillate fuel oil (23 percent), and residual fuel oil (12 percent) constitute the largest domestic volume movements (Reference 7). However, when foreign tanker imports are also included in volume calculations, residual fuel oil is transported in the largest quantities followed by distillate fuel oil, crude oil, and other products.

D.1.1.3 Truck Transportation

Trucks interface with many different segments of the petroleum industry. Trucks pick up crudes at the wellhead for delivery to gathering

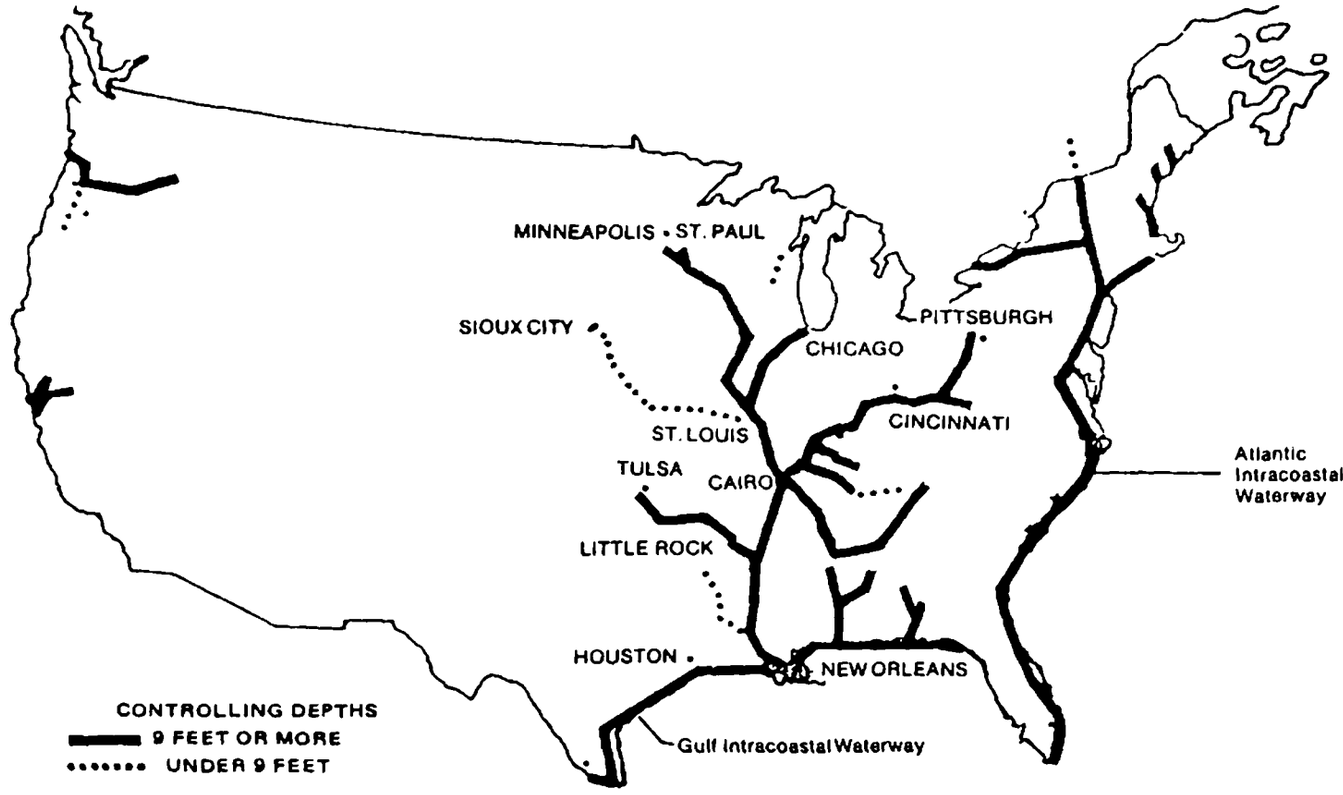

SOURCE: Adapted from *Final Environmental Impact Statement, Title XI;* U.S. Department of Commerce, Maritime Administration, February 1979.

TABLE D-2. INTERDISTRICT MOVEMENTS OF PETROLEUM PRODUCTS BY TANKERS AND BARGES FOR FIRST QUARTER 1978 (IN THOUSAND BARRELS PER DAY - MBPD)

Origin	Destination					Total
	East coast (PADD-1)	Midcontinent (PADD-2)	Gulf coast (PADD-3)	Rocky Mts. (PADD-4)	West coast (PADD-5)	
East coast (PADD-1)	--	--	--	--	--	--
Midcontinent (PADD-2)	--	--	--	--	--	--
Gulf coast (PADD-3)	1,213	175	--	--	18	1,406
Rocky Mts. (PADD-4)	--	--	--	--	--	--
West coast (PADD-5)	--	--	2	--	--	2
Total	1,213	175	2	--	18	1,408

SOURCE--U.S. Department of Energy, 1978 (March), Energy Data Reports.

pipelines or directly to refineries. Direct deliveries from refiners to distributors are often made by truck. Widespread movement of products to final consumers is facilitated by tank truck (all gasoline to service stations is delivered by motor carrier). And finally, truck transport can provide relief during seasonal peak demand by supplementing product pipeline deliveries (Reference 7). In fact, nearly all oil products and LPG are, at some point, moved by tank truck. But this movement is difficult to track and document because the brevity of the hauls (generally 50 miles or less) and the extent of our highway system (Reference 2).

Although tank trucks are used extensively for short hauls, they have only limited potential for long-haul shipments. Table D-1 indicated that truck transport has grown faster than any other method of petroleum transport. Much of this growth has been at the expense of the railroads, which cannot compete with the lower capital requirements, scheduling, and route flexibility inherent in the trucking sector (Reference 2,7). Truck adaptability has given motor carriers an estimated 37 percent of the petroleum transporting industry--essentially equal to pipelines (37 percent as shown in Table D-1).

Thus, as synfuel production develops, trucks are expected to be the initial mode of product transport, especially in Region VIII. Also, trucks are expected to play an increasing role in product movement for short hauls and in areas where pipeline networks are unavailable.

Unfortunately, information on motor carriers is sketchy at best, indicating an area for further investigation. Although the industry is regulated by three government agencies--the Interstate Commerce Commission, the Bureau of Motor Carrier Safety, and the Materials Transportation Bureau (the latter two both within DOT)--very little volume movement is tabulated.

New tank trucks are becoming progressively lighter and stronger with the use of aluminum alloys, stainless steel and reinforced fiber glass. Lighter weight permits greater payload size, with capacities reaching 11,000 gallons.

Trucks using the interstate highways must meet ICC specifications. In particular, LPG carriers are strictly regulated because of the potential for explosion. The statistics reported by the Energy Information Administration and the NGPLA indicate that trucks accounted for 3.4 and 3.5 percent of the total LPG transported during 1977 and 1978. Other modes of transport during this time include: pipeline-truck 90.6 and 90.3 percent, pipeline-rail 4.6 and 4.4 percent, rail 0.9 and 1.5 percent, and tanker or barge 0.5 and 0.3 percent. As older trucks are retired, lighter, larger ones will be coming into service resulting in continued stability or growth in product volume movements.

D.1.1.4 Railroads

Rail transport constitutes the smallest market share with only about 2 percent in 1977 (see Table D-1). For some products (petrochemicals and

liquefied petroleum gases) rail is still a practical method of transporting. Small volumes (8,000 to 34,000 gallons) can be delivered by single cars. The unit train concept (connected tank cars) allows large-volume movements. But at present, the greatest volume of intermediate and long-distance shipment is done by barge, tanker, and pipeline, rather than rail.

Railroad petroleum product shipments are reported annually by the ICC. Liquefied petroleum gases and coal gases are moved in the greatest volumes followed by residual fuel oil, asphalts, and lubricating oils (Reference 2).

A 1977 Interstate Commerce Commission (ICC) one percent waybill sample of tank car movements indicates a concentration of car movement origins in PAD Districts 1, 2, and 3. This data is summarized in Table D-3. PADD 3 has the most significant amount of traffic with the Texas-Louisiana refining area carrying the highest percentage of car loads. In PAD Districts 4 and 5, where the rail system is not as extensive as in the east, the number of car load shipments is relatively small (Reference 10).

TABLE D-3. TANK CAR MOVEMENTS

Origin	Number of Carloads	Percentage of Total Carloads	Tons
PADD 1	2,414	21.47	167,213
PADD 2	3,234	28.80	220,500
PADD 3	4,524	40.39	337,924
PADD 4	437	3.90	34,705
PADD 5	610	5.43	47,399

A number of different types of tank cars are equipped with heating coils or insulation with capacities ranging up to 50,000 gallons or more. Unpressurized, unheated cars are usually used for aviation fuels, gasolines, and distillate fuel oils. Pressurized cars carry LPG such as propane and butane. Cars with heating coils keep heavy fuels and asphalts viscous. Thus, due to design specifications, individual cars may require costly alterations in order to be used to carry different products (Reference 2).

Tank cars must meet ICC and DOT specifications and their speed is constrained by the condition of the rails themselves. Use of new materials has resulted in weight reductions and cars more suited to transporting corrosive products (Reference 2). Railroads may regain part of the petroleum transportation market if the unit-train concept (likened to a mini-pipeline on wheels) becomes feasible and competitive and as synfuel products become available.

D.1.2 Storage

Petroleum products are stored at many points in the distribution network. A tabulation of stocks could include products in tank cars at railroad sidings, pipeline fill, refinery inventory, and bulk terminal storage.

Inventory exists within the system as part of normal or anticipated fluctuation in distribution and refining activities. But actual tank storage facilities serve many additional purposes, including:

- Receiving and holding shipments that are delivered in discrete parcels but used continuously
- Accumulating products in anticipation of pipeline or waterborne movement
- Segregating different grades
- Holding crude and products during system maintenance
- Handling unavoidable but anticipated events
- Meeting safety and design specifications (Reference 10).

Table D-4 summarizes the results of a nationwide survey examining ivnentories and storage capacities.

TABLE D-4. NATIONWIDE INVENTORY AND STORAGE CAPACITIES

Product	Primary Distribution System Minimum Operating Inventory (millions of barrels)	Storage Capacity[a] (millions in barrels)
Crude Oil	290	462
Gasoline	210	438
Kerosene	35	90
Distillate Fuel Oil	125	365
Residual Fuel Oil	60	162

Source: National Petroleum Council
[a]Storage Capacity: Shell capacity of tankage and unavailable inventory outside of tankage

Somewhere between minimum operating inventory and total storage capacity is the actual measure of stocks. With products such as gasoline and jet fuel, storage at the refinery is nearly equal to bulk terminal

storage (50,000 barrels). Kerosene, distillate fuel oil, and residual fuel oils are stored in greater quantities at bulk terminals.

A detailed breakdown of inventory and storage capacity as of September 30, 1978 is documented in the National Petroleum Council, Petroleum Storage and Transportation Capacities-Inventory and Storage, Vol. II, December 1979. (Reference 12). Table D-5 summarizes the storage capacity of each PAD district (Reference 5).

TABLE D-5. STORAGE CAPACITY BY PAD DISTRICT (000 BARRELS)[a]

Product	PADD1	PADD2	PADD[3]	PADD[4]	PADD[5]
Crude Oil	3,941	92,296	160,077	21,010	51,588
Gasoline	122,593	132,598	113,138	16,361	49,007
Kerosene	31,066	20,618	21,537	1,721	14,425
Distillate Fuel Oil	144,193	100,342	61,775	6,253	20,634
Residual Fuel Oil	54,727	17,096	23,576	2,450	24,152

[a]Storage Capacity Shell capacity tankage plus unavailable inventory outside of tankage

PADD 1 has very little crude oil storage, probably because of the lack of crude pipelines and refining facilities. The industrial Middle-Atlantic region in PADD 1, however, has the greatest product storage capacities (356.5 MMBBL) compared to other PADDS. PADD 2, an area with much crude movement and refining, has extensive crude and product storage (largest) followed by PADD's 3 and 1 respectively. The Texas Gulf Area of PADD 3 has, of course, the greatest storage capacity for crude and relatively high product storage capacity (third largest) in preparation for product movement out of the area. PADD 4 has relatively small storage capacities to date because it is not industrialized and has only immature production capability. PADD 5 has moderate crude and product storage capabilities.

A detailed listing of refinery capacities by state is documented in Oil and Gas Journal, March 24, 1980. Further information on terminal capacities may be obtained from the Independent Liquid Terminals Association's 1980 Directory, Bulk of Liquid Terminals and Storage Facilities.

In addition to primary storage facilites, significant capacities exist in the secondary/consumer storage system. Although it is difficult to determine, estimates put storage in this segment at 500 million barrels for gasoline and distillate fuel oil. This is about 60 percent of primary

storage capacity. Movements and concurrent shortages and surpluses between these two systems warrant examination (Reference 5).

D.1.3 End Uses

Petroleum products are used everyday in a number of ways. The most recognizable form, gasoline, constitutes over one-third of all refined products, and supplies the largest petroleum end use sector--transportation.

In 1979, motor gasoline was supplied in the greatest aggregate volume (7.03 MMBPD), followed by distillate fuel oil (3.30 MMBPD), residual fuel oil (2.79 MMBPD), jet fuel (1.07 MMBPD), and kerosene (0.18 MMBPD). The "other products" category constitutes a large volume but includes over 2000 different refined products (Reference 1).

These petroleum products flow into a number of different sectors including transporation, electric utilities, industrial, and residential-commercial. The transportation sector is the greatest end use of refined products (9.72 MMBPD) followed by industrial (3.65 MMBPD), residential-commercial (3.45 MMBPD), and electric utilities (1.55 MMBPD) (Reference 1). In this sector synfuels are likely to displace products currently being supplied by imports. Likely target areas for synfuel products are Region VIII during the initial development with other regions, i.e., Region III, another likely target area as development moves toward the eastern part of the U.S. Figure D-8 summarizes refined products and end users together for 1977-1979. Although gasoline and jet fuel account for the greatest quantities consumed in the transportation sector, residual and distillate fuel oils also are consumed for transportation as well as the other sectors. Liquefied gases are used in the residential-commercial sector as well as the industrial. While varying amounts of "other products" are used in all sectors, the industrial sector consumes the largest quantities of the varied product slate.

A tabulation of products and corresponding end users for each state is documented in detail in the Energy Information Administration, State Energy Data Report, April 1980 (Reference 13). The tabulation confirms the general description of petroleum product flow to end users, but may be used to isolate peculiarities in particular states.

D.2 NATURAL GAS DISTRIBUTION AND USE PATTERN

This section examines the U.S. natural gas system infrastructure. Because of the extensiveness of the U.S. natural gas system and the recent legislative activities associated with synfuel development, the U.S. natural gas system has been assured of a role in the development of synthetic fuels, more specifically, the transmission and use of substitute natural gas (SNG).

Since little is presently known concerning the hazards of SNG from differing gasification technologies, an assessment of potential areas of

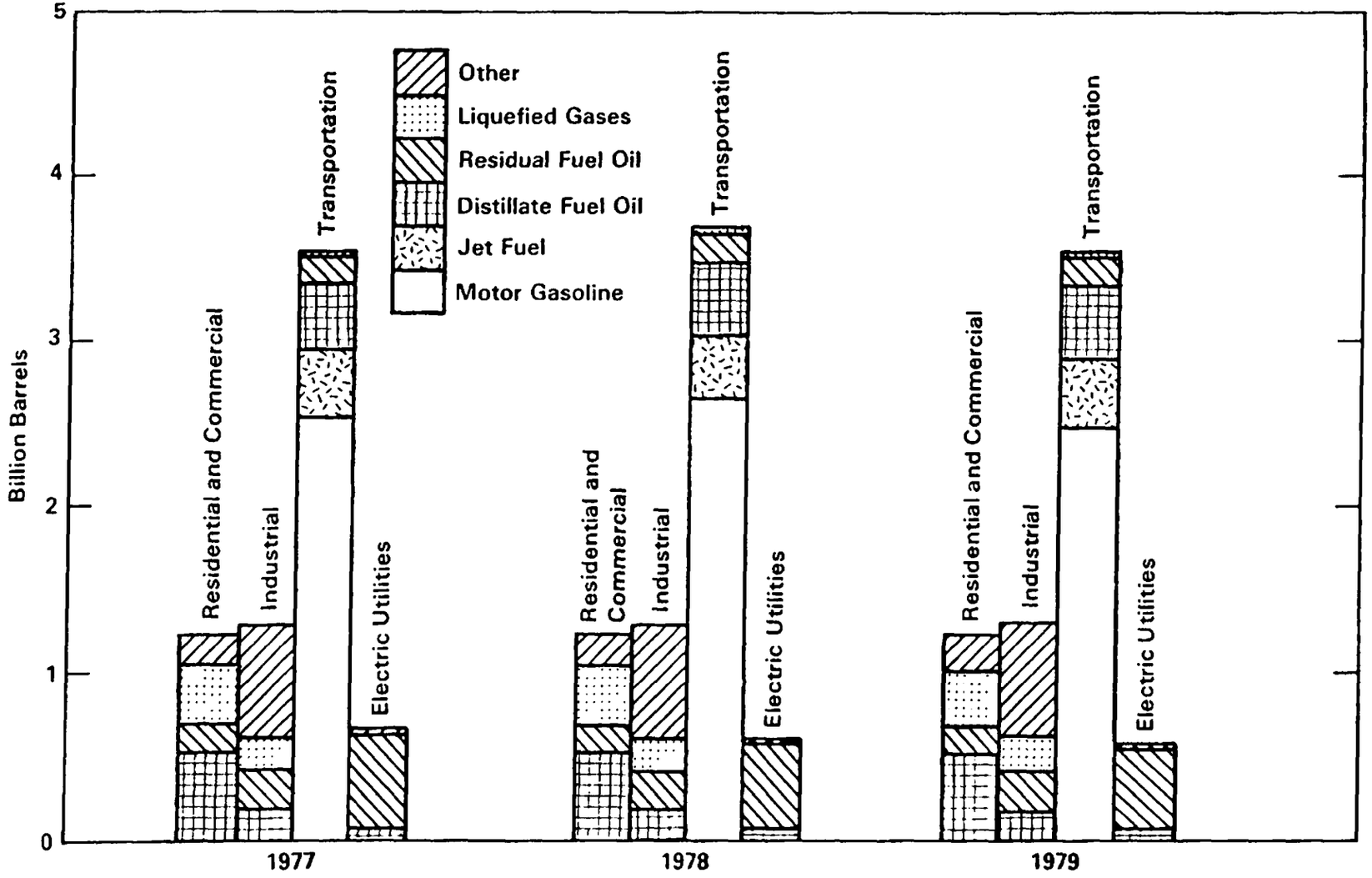

Source: Energy Information Administration, Annual Report to Congress, 1979.

Figure D-8. Refined Petroleum Products Supplied by Type and End Use Sectors

exposure is needed to properly monitor and control pollutants at acceptable levels. Towards this end, this section examines the existing U.S. natural gas system by assessing the sources of natural gas, its distribution to consumers, and its end use consumption pattern.

D.2.1 Sources of Natural Gas

Naturally occurring gas, which is found in porous and permeable reservoirs beneath the earth's surface, has been the mainstay of U.S. natural gas production since its inception. Historically, U.S. natural gas has been supplied from well-known, generalized areas (see Figure D-9). The largest production area is in southern Louisiana and the Gulf Coast area, which produced more than 36 percent of U.S. domestic gas in 1979. Other major gas producing fields are located in Texas, Oklahoma, New Mexico, and Kansas. In total, these areas are responsible for 90 percent of the U.S. natural gas production (see Table D-6).

D.2.2 Gas Supply System

D.2.2.1 Gathering, Transmission, and Distribution

Natural gas is normally purchased by gas pipeline companies from production companies in the gas fields. The gas pipeline companies then transport the gas to the market area where it is sold to distribution companies which make deliveries to the end-use customers. This system consists of a gathering, transmission, and distribution network (see Table D-7).

The gathering segment consists of a grid of pipelines spreading throughout the gas producing fields. This pipeline grid gathers gas from the wells and/or processing plants and funnels it into the main transmission line portion of the system through the use of compressor stations where needed.

The main transmission line portion of the system usually consists of a single line, and at most five parallel lines, with compressor stations every 40 to 130 miles.This main transmission line spans the distance between the gas field and the market area (see Figure D-9).

After reaching the market area, the gas is sold and delivered to various distribution companies, local utilities, or industrial customers. Often the delivery points are located directly on the main transmission line, but it is common for deliveries to be made through a lateral line that branches out to the buyer's distribution system.

TABLE D-6. MARKETED PRODUCTION OF U.S. NATURAL GAS 1979[a]

Region	States Covered	Capacity (Millions of ft3)
Region I	Connecticut	0
	Maine	0
	Massachusetts	0
	New Hampshire	0
	Rhode Island	0
	Vermont	0
	Total	0
Region II	New Jersey	0
	New York	10,460
	Total	10,460
Region III	Delaware	0
	District of Columbia	0
	Maryland	80
	Pennsylvania	89,810
	Virginia	8,049
	West Virginia	149,590
	Total	247,529
Region IV	Alabama	56,037
	Florida	47,169
	Georgia	0
	Kentucky	59,635
	Mississippi	81,269
	North Carolina	0
	South Carolina	9
	Tennessee	258
	Total	244,377
Region V	Illinois	982
	Indiana	179
	Michigan	127,251
	Minnesota	0
	Ohio	97,261
	Wisconsin	0
	Total	225,673
Region VI	Arkansas	101,931
	Louisiana	7,064,958
	New Mexico	1,177,955
	Oklahoma	1,732,719
	Texas	6,904,389
	Total	16,981,952

(continued)

TABLE D-6. (CONTINUED)

Region	States Covered		Capacity (Millions of ft3)
Region VII	Iowa		0
	Kansas		765,039
	Missouri		20
	Nebraska		2,731
		Total	767,790
Region VIII	Colorado		184,866
	Montana		45,845
	North Dakota		28,566
	South Dakota		0
	Utah		59,434
	Wyoming		323,313
		Total	642,024
Region IX	Arizona		235
	California		304,985
	Hawaii		0
	Nevada		0
		Total	305,220
Region X	Alaska		183,982
	Idaho		0
	Oregon		0
	Washington		0
		Total	183,982
		Total U.S.	19,609,000[b]

NOTE: [a] Marketed production Total gas produced (repressuring, vented, flared); Data represent actual 1979 U.S. marketed total production broken down by 1977 production percentages.

[b] Totals may not equal sums due to independent rounding.

Source: Adapted from Gas Facts 1978, AGA, 1979; Monthly Energy Review, DOE/EIA 0035, February 1980.

Figure D-9. Major Natural Gas Pipelines (March 31, 1980)

TABLE D-7. GAS UTILITY INDUSTRY MILES OF PIPELINE AND MAIN BY TYPE AND BY REGION 1979[a,b]

Region	Total	Field and Gathering	Transmission Pipeline	Distribution Main
I	26,632	0	1,644	24,988
II	62,842	412	5,021	57,409
III	95,329	14,566	20,813	59,950
IV	130,605	3,888	39,791	86,926
V	210,518	4,398	39,841	166,279
VI	227,683	35,602	86,141	105,940
VII	88,105	8,123	33,290	46,692
VIII	49,408	7,038	15,560	26,810
IX	96,673	853	14,152	81,667
X	25,281	18	4,394	20,869
Total U.S.	1,013,076	74,898	260,647	677,530

[a] Excludes service pipe. Data not adjusted to common diameter equivalent. Milage shown as of end of year.

[b] Includes 6,000 miles of underground storage pipe.

Source: American Gas Association, Gas Facts 1978, 1979, p.56.

D.2.2.2 Gas Flow

Production volumes and the gas supply system can be combined to show the relative distribution of natural gas flow throughout the U.S. Briefly, large amounts of gas from the major producing fields of Louisiana, Texas, and Oklahoma are shipped northward to the major markets of the Great Lakes region and northeastern U.S. The Great Lakes region is also supplied by imports from Canada. Major markets in California are supplied by gas flowing westward from production fields in New Mexico and western Texas. In addition, significant gas volumes flow southward from Canada into Washington, Oregon, and on into California (see Figure D-10). Changes in gas flow patterns in response to synthetic natural gas produced from coal cannot be predicted because the actual locations of coal gasification plants are still uncertain. Section 3.1.2, however, does discuss these facilities as being located where they have access to the existing pipeline network. Therefore, it is expected that the existing transmission system will be utilized through spur pipeline connections to these gasification plants.

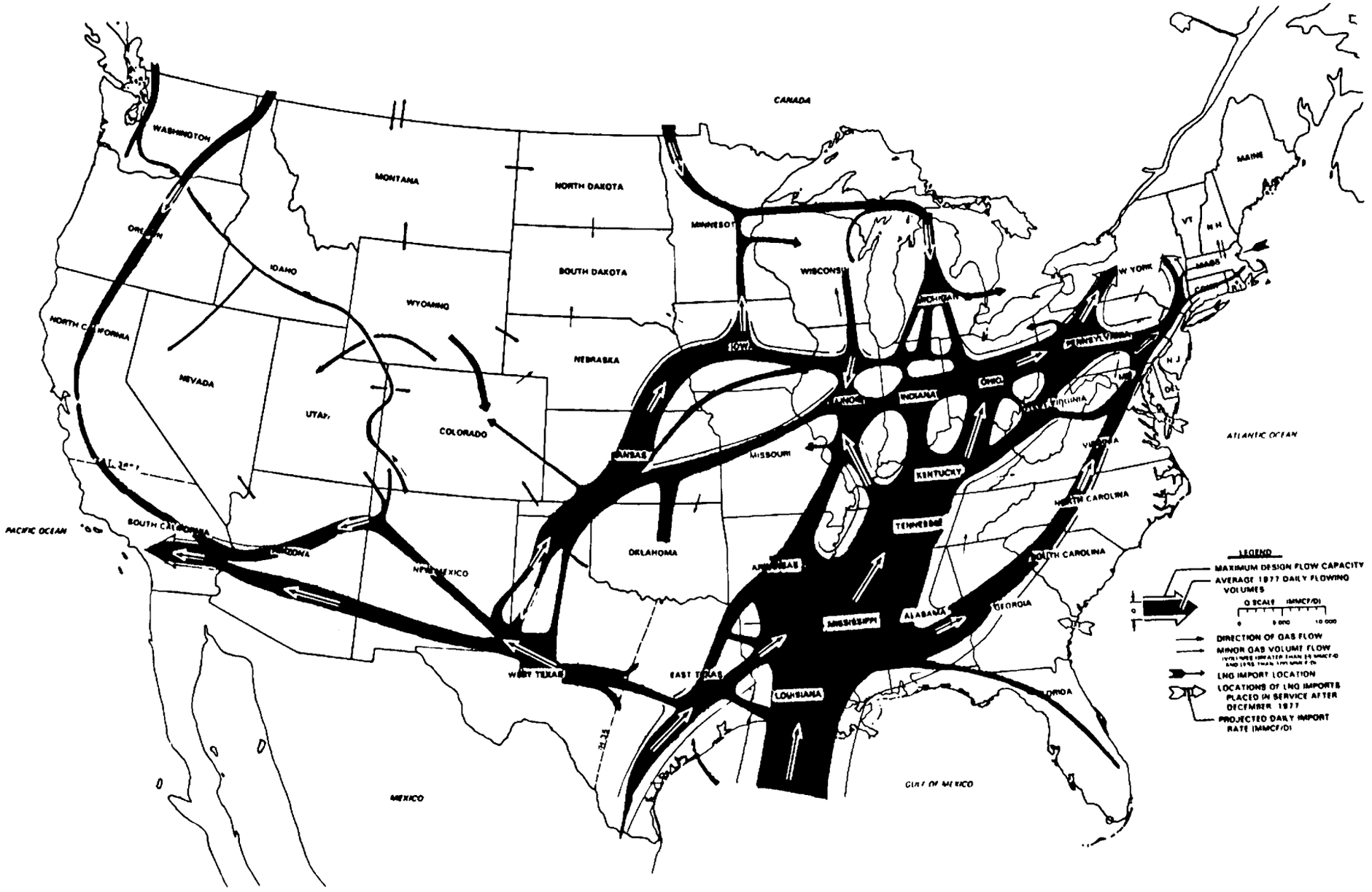

Figure D-10. National Gas Flow Patterns

D.2.2.3 Storage

Underground gas storage is a principal factor in gas operations. Storage involves transporting gas from producing fields and reinjecting it into other reservoirs where it is stored until needed to meet market requirements. Approximately 40 percent of the natural gas consumed annually by residential space heating customers in the U.S. has been withdrawn from underground storage (Reference 14).

Because storage facilities are used to augment the supply of gas used during the colder months of the year resulting from increased space heating, most storage facilities are located near the major consumption areas. However, many storage areas are located near the major producing areas of Louisiana, Texas, Oklahoma, Arkansas, and Kansas (see Figure D-11).

The U.S. has an ultimate reservoir capacity of 7,330 billion cubic feet distributed among 385 individual underground storage facilities located throughout 26 states. There are three types of storage facilities: depleted gas or oil fields, waterbearing sands, or salt domes.

The largest concentration of storage facilities exists within Region V (Illinois, Indiana, Michigan, Minnesota, Ohio, and Wisconsin), which is also a major natural gas consumption area. In total, 38 percent of U.S. natural gas reservoir capacity is located in Region V. The next largest concentration of storage facilities is in Region III (Delaware, District of Columbia, Maryland, Pennsylvania, Virginia, and West Virginia). Storage capacity in Region III amounts to 18 percent of the U.S. total. The remaining 44 percent of storage capacity exists in Region VI 17 percent, Region VII 9 percent, Region IX 7 percent, Region VIII 5 percent, Region IV 4 percent, Region II 2 percent, and Region X about 0.4 percent. No storage capacity exists in Region I (see Table D-8).

D.2.3 Natural Gas End Uses

Natural gas is used primarily as a fuel resource. However, its gaseous hydrocarbon compounds such as ethane, butane, and propane are used by the petrochemical industry for feedstocks as well. The total volume of natural gas consumption in 1978 totaled 19,624 billion cubic feet, which is nearly 26 percent of domestic energy consumption (Reference 15). Natural gas ranks second in the domestic market share of energy consumption behind petroleum.

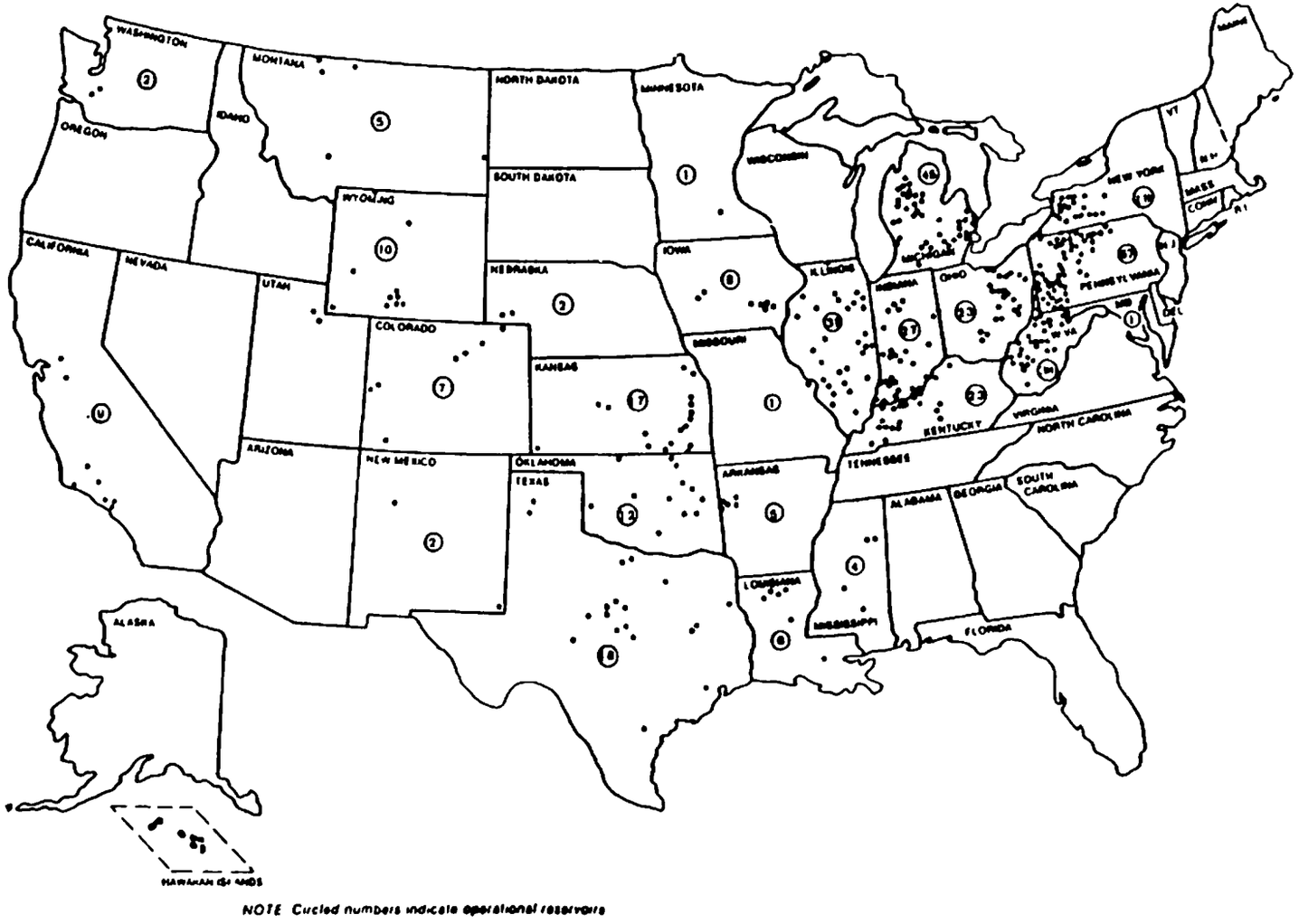

Source: Petroleum Storage and Transportation Capacities, Gas Pipeline. Vol. VI, National Petroleum Council, December, 1979.

Figure D-11. Location of Underground Gas Storage

TABLE D-8. U.S. NATURAL GAS STORAGE VOLUMES AND CAPACITIES

Region	Maximum Stored Gas 1979[a] (Billions of Ft^3)	Ultimate Reservoir Capacity 1978[b] (Billions of Ft^3)
I		0
II	147	151
III	1,398	1,330
IV	350	314
V	2,432	2,761
VI	1,052	1,231
VII	535	642
VIII	257	368
IX	355	503
X	38	31
Total U.S.[c]	6,563	7,330

a Maximum U.S. stored gas obtained from DOE/EIA 0035/02 (80) Monthly Energy Review, p.50. State and division data obtained by multiplying percentage of maximum stored gas in 1978 (Source: AGA, Gas Facts 1978, p.48, 1979) times the 1979 U.S. maximum stored gas.

b Source: AGA, Gas Facts 1978, p.48, 1979

c Total may not equal sums because of independent rounding.

The largest single end use of natural gas is space heating. Residential and commercial services combined are the major consumers of natural gas for space heating, which accounts for more than 38 percent of natural gas consumption in these sectors. Such a large market share was brought about by the installation of gas furnaces in new homes and conversions to natural gas from coal and heating systems which resulted in annual growth rates of 4.5 percent prior to the 1970's; however, government restrictions have since limited growth because of declining natural gas reserves (Reference 16).

The largest consumer of natural gas by class of service is the industrial sector. Industrial consumption amounted to almost 43 percent of the total gas sales in 1978. The five largest consumers, which amassed 60 percent of industrial gas sales, were: (1) electrical services, (2) chemicals and allied products, (3) primary iron and steel, (4) food and kindred products, and (5) fabricated metal products, machinery equipment, and supplies.

It is expected that electric utilities and other industrial users of natural gas will shift increasingly to sources of low-Btu synthetic gas production as shortages of natural gas become increasingly acute. This will result in consumption of low-Btu synthetic gas near the point of its production because it cannot be transported economically over long distances by pipeline. Consequently, this will leave natural gas and high-Btu synthetic gas production primarily to residential and commercial users.

D.2.3.1 Geographical Areas of End Use

Three major market areas account for 69 percent of the consumption of natural gas in the U.S.: Region VI (Arkansas, Louisiana, New Mexico, Oklahoma, and Texas); Region V (Illinois, Indiana, Michigan, Minnesota, Ohio, and Wisconsin); and Region IX (Arizona, California, Hawaii, and Nevada).

Industrial use amounts to 56 percent of total natural gas consumption in the south central region, Region VI. Electrical generation services are the largest industrial consumers by sales, followed by: (1) chemicals and allied products, (2) petroleum refining, (3) petroleum and natural gas production, and (4) paper and allied products.

The Great Lakes states of Region V (Illinois, Indiana, Michigan, Minnesota, Ohio, and Wisconsin) constitute the next largest natural gas consumption region with 20 percent of the total U.S. natural gas consumption. Residential and commercial use is the largest consumer followed by industral service. The five largest industrial users in this area by sales are: (1) primary iron and steel, (2) other services, (3) fabricated metal products, machinery, equipment and supplies, (4) chemicals and allied products, and (5) food and kindred products (see Tables D-9 and D-10).

The western states of Region IX (Arizona, California, Hawaii, and Nevada) are the third largest consumption areas of natural gas. Together they account for 9 percent of the natural gas consumption. Residential and commercial use are the largest consumers followed by industrial use. The five largest industrial consumers by sales are as follows: (1) electrical services, (2) petroleum refining, (3) food and kindred products, (4) chemicals and allied products, and (5) other services.

D.3 PETROCHEMICALS

This section is primarily concerned with the assessment of the current existing marketing system infrastructure associated with the production and distribution of petrochemical products and by-products derived from petroleum and natural gas feedstocks. The assessment puts into perspective the types and relative quantities of petroleum-based products and by-products that are in commerce today. In addition, this assessment serves as the framework for the baseline marketing system into which oil shale and coal-derived synfuel products and by-products are introduced into the petrochemical industry as they become available.

TABLE D-9. U.S. NATURAL GAS CONSUMPTION 1978 (MILLIONS OF Ft^3)

Region	Residential	Commercial	Industrial	Trans-portation	Electric Utilities	Total
I	138,052	71,847	50,725	646	1,596	262,866
II	467,315	190,993	134,346	806	1,992	795,452
III	484,657	219,011	390,703	44,244	3,459	1,142,074
IV	392,860	269,224	660,401	91,051	220,580	1,634,116
V	1,669,674	796,353	1,442,010	35,960	75,034	4,019,031
VI	514,692	340,293	4,323,245	209,236	2,277,784	7,665,250
VII	387,494	253,148	391,074	81,456	166,359	1,279,531
VIII	203,976	131,110	232,493	14,521	38,682	620,782
IX	579,305	270,962	544,283	29,874	378,295	1,802,719
X	64,981	58,165	235,329	19,655	24,525	402,655
Total U.S.	4,903,006	2,601,106	8,404,609	527,449	3,188,306	19,624,476

Source: Energy Information Administration, State Energy Data Report, April, 1980.

Because the petrochemical industry encompasses a diversity of hydrocarbon chemical compounds (i.e., primary petrochemicals, petrochemical intermediates, petrochemical products, and petrochemical by-products), it was necessary to limit the scope of this assessment to only the following selected primary petrochemicals: ethylene, propylene, benzene-toluene-xylene (B-T-X) group, and butadiene. The selection of these six petrochemicals was based on their being the primary petrochemicals, and on their significant use in the production of petrochemical intermediates, products, and by-products. Table D-11 gives the U.S. production rate (billions of lb) of the six selected primary petrochemicals, and ranks them according to the volume of production reported for 1979.

D.3.1 Background

The definition of petrochemicals varies widely in the literature depending on the purpose of the statistics reported. The general definition is that petrochemicals include all chemical compounds derived from crude oil and natural gas hydrocarbons. These compounds include a variety of petrochemicals (ethylene, propylene, benzene, toluene, xylene, and butadiene) and intermediate organic compounds that are converted in downstream processes into such petrochemical products as synthetic fibers, plastics, synthetic rubber, medicinals, nitrogen fertilizers, pesticides, and industrial solvents (Reference 17, 18, 19). However, the literature

TABLE D-10. GAS UTILITY LARGE VOLUME SALES, BY TYPE OF INDUSTRY AND BY DIVISION, 1978 (BILLIONS OF Ft3)

Industry Classification	Total U.S.	New England	Middle Atlantic	East North Central	West North Central	South Atlantic	East South Central	West South Central	Mountain	Pacific
Agriculture, forestry and fisheries	28.5	0.0	0.1	6.1	7.7	a	0.2	5.0	1.9	7.4
Petroleum and natural gas production	42.9	0.0	0.0	a	4.4	a	1.1	23.4	8 1	5.9
Other mining	41.5	a	0.4	3.0	0.4	a	0.4	8.7	21 7	7.0
Electric services[b]	1,495.8	6.3	3.3	56.8	135.9	52.3	19.0	740.7	173.2	308.3
Other transportation, communication, and public utilities	76.5	2.8	2.0	23.2	14.8	0.9	0.5	13.0	6.0	13.4
Hotels, rooming houses, and camps	21.5	0.1	2.7	10.0	0.3	1.0	0.0	1.7	0.5	5.2
Laundries, cleaning and dyeing	18 1	a	0.2	9.7	0.1	0.4	0.1	0.2	0.0	7.3
Other services	269.8	2.2	9.3	155.8	15.3	8.2	4.4	14.1	11.5	49.0
Other non-manufacturing	139.2	0.3	11 6	75.5	2.8	2.0	4.3	0.7	9.8	32.2
Food and kindred products	267 3	1.3	9.4	101 6	43.2	12.1	5.7	11.8	18.7	63.5
Textile products, apparel, fabrics etc.	36 7	1.6	1 9	3.5	0.3	17.1	5.5	0.5	a	6.1
Furniture, lumber, and other wood products	42.0	a	0.9	8.1	0.8	1.6	5.7	8.0	1.5	15.4
Paper and allied products	193.7	0.7	9.4	54.8	3.8	18.5	33.5	19.5	13.4	40.0
Carbon black	32.8	a	0.0	1 0	21.5	2.1	0.0	7.0	0.0	1.2
Chemicals and allied products (except carbon black)	588.7	1.3	18.7	123 0	93.9	87.6	39.0	131 8	39.3	54.3
Petroleum refining	236.4	0.2	5.2	11 7	16.1	4.8	6.8	87.6	15 5	88.4
Rubber and miscellaneous plastic products	40.3	0.4	3 1	18 0	3.2	0.7	4.7	2.7	2.2	5.3
Glass products	170.9	1.7	42.0	57 2	10.9	18.5	8.2	9.8	1.0	21.5
Cement	57.2	0.1	a	2 9	13.6	13 8	4.2	6.6	9 4	6.7
Clay products, pottery, etc	83.3	a	9.9	16.8	6.2	23.5	8.4	2.1	5.0	11.2
Other stone products and miscellaneous	90.3	1.7	8.0	22.8	9.2	14.0	3.8	3.8	2.9	24.1
Primary iron and steel industries	561.3	4.7	102 7	310 7	31.0	21 6	39.5	2.5	23 4	25.2
Primary non-ferrous industries	202 4	0.7	11 2	73.8	12.5	8.6	18.1	6 3	49 0	22 4
Fabricated metal products, machinery equipment and supplies	248.1	5.0	38.6	144 4	16.7	5 1	11.5	3 1	2.8	20.9
Transportation equipment	98 9	0.8	10.4	62.0	8 3	3.5	2.7	0.6	0.3	10.5
Other manufacturing	113.4	1.4	11 7	40.2	15 2	5.8	15.2	4.4	3 2	16.3
Public administration	56.0	0.4	2.9	17 0	3.6	10 0	1.5	1.9	7 6	11.3
Total (Sum)[b]	5,253.8	33.7	315.6	1,409.7	491.6	333.9	243.9	1,117.3	427.9	880.0
Total Commercial, Industrial and "Other" sales of co.'s reporting this table	7,377.0	99.5	644.5	1,814.5	779.4	561.9	341.7	1,545.6	561.8	1,028.1
Total Gas Utility Industry Commercial, Industrial and "Other" sales	9,647.8	127.0	735.4	2,161.2	931 6	721.1	486.9	2,757.0	624.7	1,102.8

a Less than 0 05

b Includes the following quantities of gas for electric generation not included in Total Commercial, Industrial and "Other" sales of companies reporting this table or in Total Gas Utility Industry sales Such quantities represent transfers by the gas department to the electric department of combination gas and electric companies

	187.9	0.0	2.5	4 9	30.6	4.6	1.7	111.1	32.5	0.0

Source: American Gas Association, Gas Facts 1978, p. 92, 1979.

TABLE D-11. PRIMARY PETROCHEMICALS RANKED BY VOLUME OF PRODUCTION

Petrochemical	Production (10^9 lb)[a]
Ethylene	29.19
Propylene	14.30
Benzene	12.72
Toluene	11.86
Xylene[b]	11.07
Butadiene (1,3)[c]	3.55
TOTAL U.S.	82.69

[a]Quantities reported for 1979 production in C+EN, May 5, 1980

[b]All grades including p-xylene 4.18 and xylene 6.89

[c]Rubber grade

Source: "C&EN's Top Fifty Chemical Products and Producers Special Report," Chemical and Engineering News, May 5, 1980, pp. 33-37.

states that "there is no standardized definition of the petrochemical industry" (Reference 17, 20).

The U.S. was the early pioneer of the petrochemical industry, which began its most rapid growth during World War II. Much of the growth in the first-stage operations of the industry, which involved production of primary petrochemicals, was concentrated along the U.S. Gulf Coast states (EPA Region VI) where abundant supplies of petroleum and natural gas raw materials/feedstocks existed. Production of these primary petrochemicals is still concentrated in Region VI, and the states of Texas and Louisiana account for about 70 percent of all primary petrochemical production (Reference 21).

The petrocehmical industry can be briefly characterized as that portion of the chemical and allied products industries that utilizes certain petroleum and natural gas fractions and converts these feedstocks into a wide variety of primary petrochemicals. These primary products are then transferred to other sectors of the petrochemical industry throughout the U.S. for conversion to petrochemical intermediates, and to such petrochemical products as synthetic fibers, plastics, synthetic rubber, etc. These products, in turn, are fabricated by many different industries into thousands of consumer products (Reference 21). Five of the selected primary petrochemicals are shown in Figure D-12 in relation to how the industry derives primary petrochemicals and petrochemical products from petroleum and natural gas feedstocks. The figure also shows the major consuming industries and direct end uses of the final products. Figure

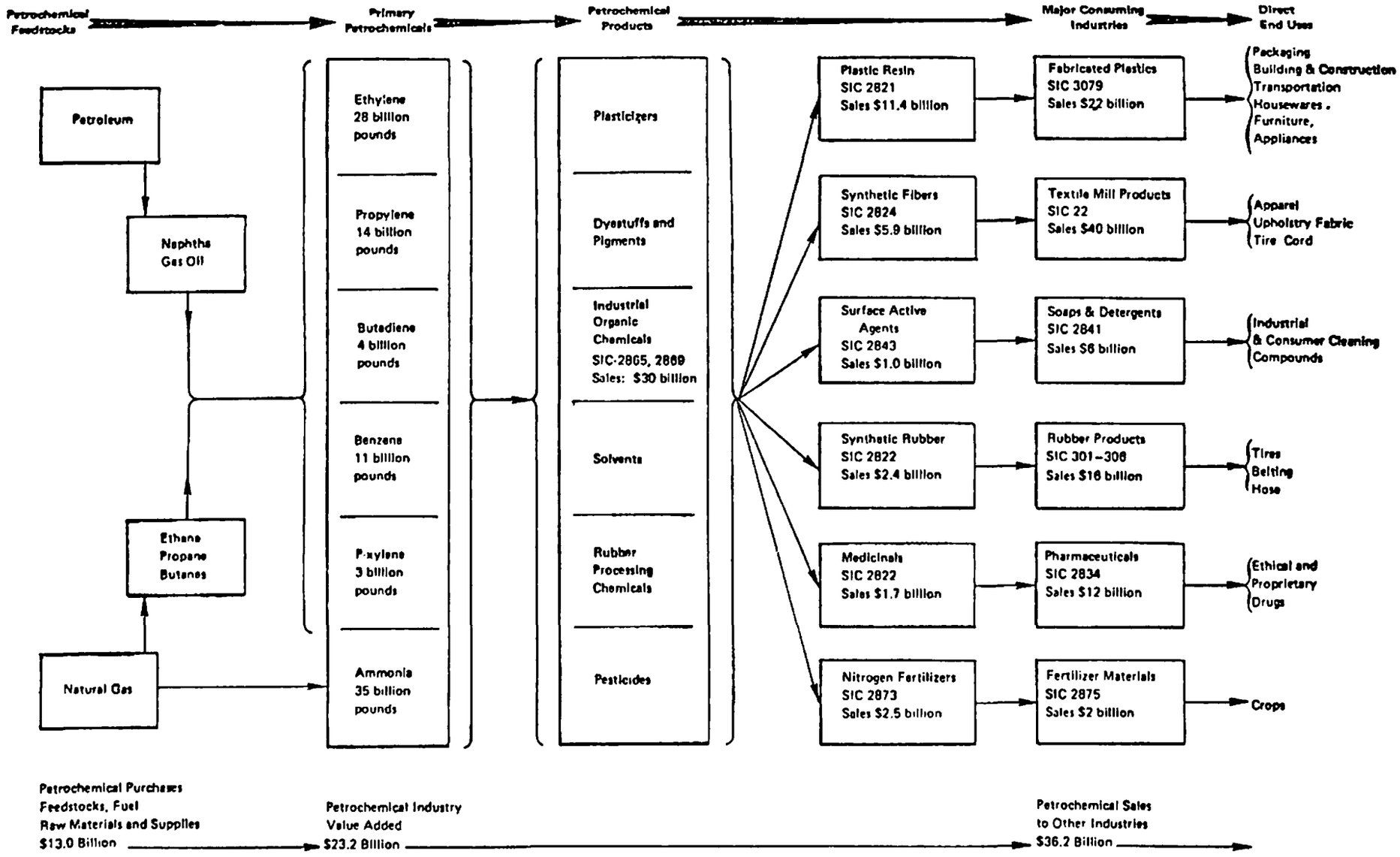

Source: Arthur D. Little, Inc., 1978 Petrochemical Industry Profile - A Report to the Petrochemical Energy Group, September 5, 1979

Figure D-12. The U.S. Petrochemical Industry - 1978

D-13 shows the flow of primary petrochemicals to the motor vehicle industry, highlighting butadiene (raw material for rubber making) and materials for paint, batteries, and synthetic fibers. During 1979, the total U.S. production of the selected primary petrochemicals was 82.69 billion pounds as compared to 70.72 billion pounds produced in 1978 (Reference 22).

D.3.2 Major Petrochemicals

In this section, primary petrochemicals selected for this assessment are discussed in terms of the feedstock sources from petroleum and natural gas and U.S. gross production in 1979 and 1978. The regional breakdown of the gross production for benzene in the U.S. is given by the EPA federal regions. Also, the selected primary petrochemicals are discussed in terms of the existing industry modes of transportation, storage, and distribution systems. Because of the lack of data to properly assess ethylene, propylene, toluene, xylene, and butadiene, only benzene is discussed as an example petrochemical for transportation and storage systems and end uses.

D.3.2.1 Sources

Basically, petroleum and natural gas are the two primary sources of petrochemicals produced in the U.S. today. However, some petrochemicals (e.g., benzene) are made from coke-oven light oil, a by-product of steel manufacturing. Petroleum is used as the primary feedstock material for the selected primary petrochemicals discussed. Natural gas, on the other hand, is used for the organic synthesis of ethylene. The synthesis gas is produced from ethane, which is the third step in the natural gas refining process.

In the case of petroleum-derived petrochemicals, the raw materials (crude oil) are used as feedstock at the petroleum refinery. These raw materials are catalytically changed into several organic chemical compounds. The types and quantities of petrochemicals produced are somewhat dependent upon the particular catalytic process used and the desired end products. Natural gas-derived petrochemicals are produced in a similar manner. Providing that most natural gas transported to the refinery is wet, i.e., contains natural gas liquids, the processing steps require drying the gas, removing hydrogen sulfide, and liquefying the gas. In the second step of natural gas processing, the basic alkane (i.e., ethane) gases are produced. These are subsequently modified to produce petrochemicals such as ethylene and propylene (Reference 23).

The U.S. gross production of the selected primary petrochemicals was 82.69 billion pounds during 1979 and 70.72 billion pounds during 1978. This 1979 production is an annual increase of about 16 percent over the 1978 production. Table D-12 shows the U.S. production of the selected petrochemicals ranked by the volume of production for 1978-1979. This table shows that the average annual percent change in the primary petrochemical production varied and resulted in an increase of 0.85 percent for butadiene and about 55 percent for toluene over 1978 production. Toluene

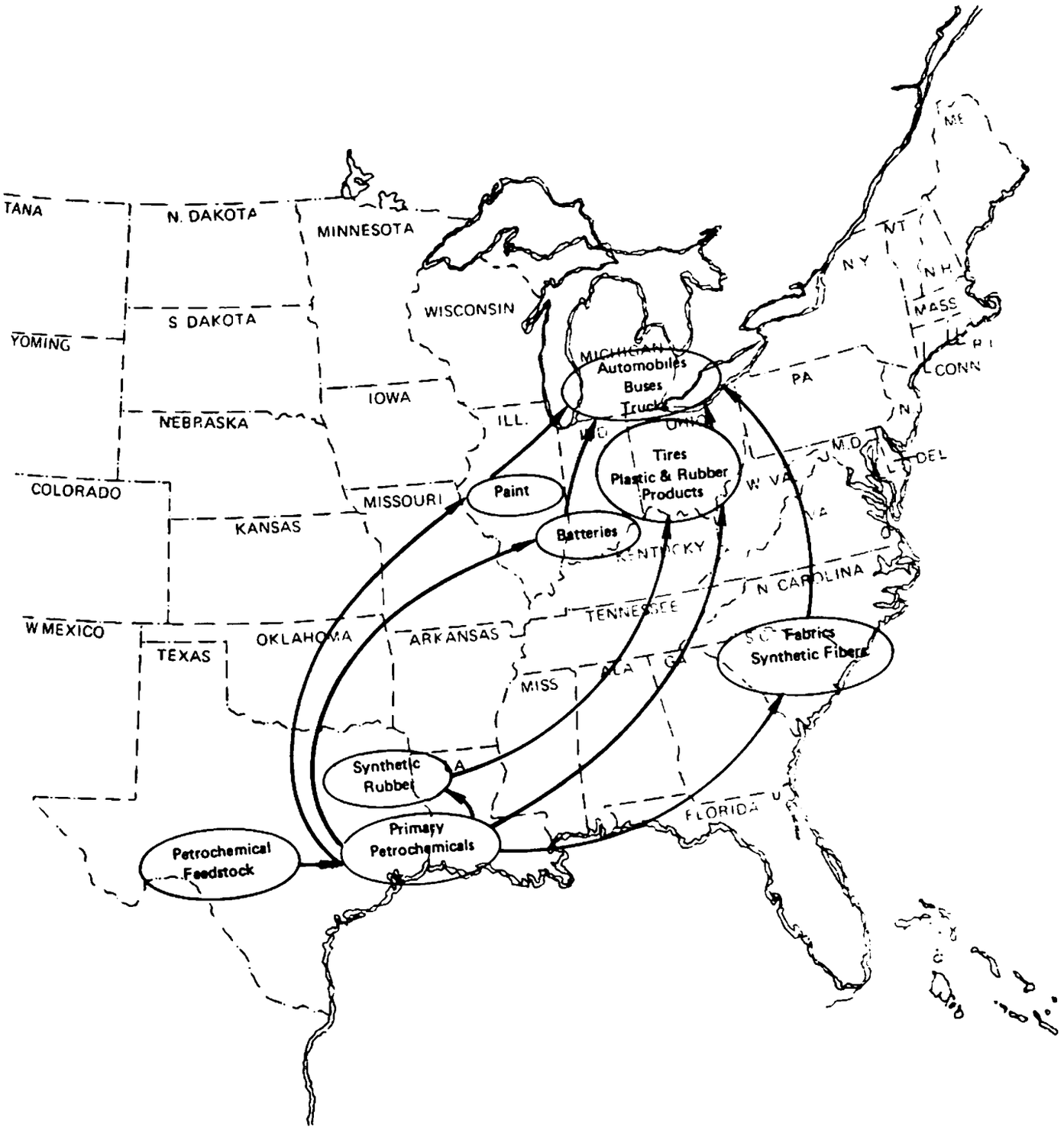

Source: Arthur D. Little, Inc., The Petrochemical Industry and the U.S. Economy-A Report to the Petrochemical Energy Group, December 1978.

Figure D-13. The Flow of Petrochemicals to the Motor Vehicles Industry

had the largest annual percentage growth while butadiene had the smallest. In 1978, the production of toluene declined 1.2 percent below the 1977 production. The increase of 55 percent growth in 1979 is attributed to toluene's relatively new use as a blending agent to raise the octane rating of unleaded gasoline as observed by industry (Reference 22).

Historically (1969-1979), the production statistics of the selected primary petrochemicals show that the average annual percent change in production varied and show an increase of 1.3 percent for butadiene and 9.9 percent for p-xylene during that period. These statistics also show that butadiene was the least produced while ethylene ranks as number one among the selected primary petrochemicals produced during the ten-year period (Reference 22).

Using these statistics as a basis, the future supply of feedstock materials can be determined conservatively. It is anticipated that synfuels derived from coal and oil shale will provide a small percentage of feedstock materials for production of petrochemicals, because of our reduced national supply of petroleum and natural gas and the concern for how these natural resources should be used in the future as fuels and feedstock materials (Reference 20).

TABLE D-12. UNITED STATES PRODUCTION OF SELECTED PETROCHEMICALS RANKED BY VOLUME

Primary Petrochemicals	1979 Production (Billions of lb)	1978 Production (Billions of lb)	1978-1979 Average Annual Change (%)
Ethylene	29.19	25.96	12.44
Propylene	14.30	13.01	9.92
Benzene	12.72	10.94	16.27
Toluene	11.86	7.64	55.24
Xylene[a]	6.89	6.13	12.40
p-Xylene	4.18	3.52	18.75
Butadiene (1,3)[b]	3.55	3.52	0.85
Total	82.69	70.72	125.87

[a] Include all grades

[b] Rubber grade

Source: "C&EN's Top Fifty Chemical Products and Producers Special Report", Chemical and Engineering News, May 5, 1980, pp. 33-37.

The regional disaggregation of the gross U.S. production of primary petrochemicals produced during 1979 is based upon the quantities produced by each state as reported in the Draft Environmental Impact Statement -

Benzene Emissions from Benzene Storage Tanks, Background Information for Proposed Standards, EPA-450/ 3-80-034a (Reference 24). This regional breakdown is required to determine the types and quantities of petrochemicals transported, stored, and distributed throughout the U.S. The EPA report, the only available data at this time, deals specifically with benzene. Thus, using the data reported for the individual states, the benzene production data by state was mapped to the ten EPA regions. The results of this mapping process, shown in Table D-13, show that over 58 percent of the benzene produced in the U.S. during 1979 came from EPA Region VI, which includes Louisiana, Texas, and Oklahoma. The second highest producing region in the U.S. is Region II, which includes New Jersey, New York, and the U.S. territories of Puerto Rico and the Virgin Islands.

D.3.2.2 Transportation

The transportation network is a vital link in the transport, distribution, and storage of petrochemicals. Transportation connects producers and consumers, who are widely distributed throughout the U.S. The purpose for assessing the transportation of these selected primary petrochemicals is to gain an understanding of the existing transportation network in order to eventually determine how synfuel-derived petrochemicals will fit into the existing transportation infrasturcture. The data required to completely assess the petrochemical network is not available in the required format. (This data needs to be reported in the form of petrochemical types and quantities transported by states, federal regions, or PADD's to make it consistent with the data presented for production.) Thus, the transportation of the selected primary petrochemicals is difficult to assess at this time.

Some transportation data was obtained from the Department of Commerce, Bureau of Census, census of Transportation Department. This data shows transportation of the selected primary petrochemicals as an aggregate with crude products from coal and petroleum tars. The Census Bureau classifies commodity transportation modes according to a 5-digit Standard Transportation Commodity Classification (STCC) code that is similar to the 4-digit-level Standard Industrial Classification (SIC) code. The two codes are not directly related.

The data obtained from the Census Bureau was abstracted by telephone from the 1972 Census of Transportation Report from a staff member in the transportation department (Reference 25). In this report, the selected primary petrochemicals are aggregated into the STCC code 28141 - Crude Products from Coal and Petroleum Tars. The U.S. total tons shipped for this code by transportation mode and the percent transported by each mode is presented in Table D-14. (It was cautioned that this data has a standard error of 26 percent.) As noted in Table D-14, barge transportation accounted for 44.1 percent, rail-34.8 percent, motor carrier-20.2

TABLE D-13. REGIONAL/STATE OR TERRITORY PRODUCTION OF BENZENE-1979

Region/State or Territory	Capacity (Billions of lb)	Percent of Total Capacity
New England (I)	NA	NA
New York/New Jersey (II)		
New Jersey	0.223	1.75
New York	0.146	1.15
Puerto Rico	1.876	14.75
Virgin Islands	0.413	3.25
Subtotal	2.658	20.90
Middle Atlantic (III)		
Maryland	0.095	0.75
Pennsylvania	0.846	6.65
Subtotal	0.941	7.40
Southeast (IV)		
Kentucky	0.407	3.20
Subtotal	0.407	3.20
Great Lakes (V)		
Illinois	0.394	3.10
Michigan	0.191	1.50
Ohio	0.331	2.60
Subtotal	0.916	7.20
South Central (VI)		
Louisiana	1.635	12.85
Texas	5.660	44.85
Oklahoma	0.153	1.20
Subtotal	7.448	58.55
Central (VII)		
Kansas	0.083	0.65
Subtotal	0.083	0.65

(continued)

TABLE D-13. (CONTINUED)

Region/State or Territory	Capacity (Billions of lb)	Percent of Total Capacity
Mountain (VIII)		
Utah	0.025	0.20
Colorado	0.020	0.15
Subtotal	0.045	0.35
West (IX)		
California	0.222	1.75
Subtotal	0.222	1.75
Northwest (X)	NA	NA
Total U.S.	12.720	100.00

NA Not available

Sources: "C&EN's Top Fifty Chemical Products and Producers Special Report", Chemical and Engineering News, May 5, 1980, pp. 33-37.

Adapted from Environmental Protection Agency, Draft Environmental Impact Statement - Benzene Emissions from Benzene Storage Tanks - Background Information for Proposed Standards, EPA-450/3-80-034a, September, 1980

percent, and private truck-0.9 percent. Also, this data represents only long-distance transport of materials versus local transport. Pipelines, which were considered initially to be another mode of transportation, are not included as part of the transportation network for STCC 28141 (Reference 25).

D.3.2.3 Benzene Storage

Benzene storage facilities are located throughout 19 states within the continental U.S. There are 494 tanks in 143 facilities. There are three types of facilities: (1) benezene producing facilities; (2) benzene consuming facilities; and (3) bulk storage terminals (Reference 24).

The greatest concentration of storage facilities is in Texas. Texas contains 52 percent of the total combined production storage facilities, 36 percent of the total consumer storage facilities, and 75 percent of the bulk storage facilities.

Total U.S. benzene storage capacity is equal to 278 million gallons. Of the 143 facilities that are known to store benzene, 54 (41 percent) are benzene producers, 73 (56 percent) are benzene consumers, and 4 (3 percent) are bulk storage terminals.

TABLE D-14. U.S. SHIPMENT OF CRUDE PRODUCTS FROM COAL AND PETROLEUM TARS TOTAL TONS SHIPPED BY TRANSPORTATION MODE IN 1972

Transportation Mode	Percent Transported By Mode	Tons[a] Transported By Mode
Barge	44.1	1,030,176
Rail	34.8	812,928
Motor Carrier	20.2	471,872
Private Truck	0.9	21,024
U.S. Total	100.0	2,336,000

[a]This data represents total tons transported only long distance. Pipeline transportation was not included. This data also has a standard error of 26 percent or 607,360 tons

Source: Personal communication with Robert Torene, Department of Commerce, Bureaus of Census, Census of Transportation, September 8, 1980

D.3.3 Benzene End Use

Benzene currently is used almost exclusively as a feedstock material in the production of other materials. The major benzene derivatives used in producing other materials are: ethylbenzene-50 percent, cumene-15 percent, cyclohexane-15 percent, and aniline-5 percent (Reference 24). Ethylbenzene is used in the production of styrene for polystyrene, and cumene is used for phenol and for starting material for nylon intermediates.

The regional consumption of benzene and its major derivatives is constrained to seven federal regions consisting of ten states. These states, in order of magnitude of consumption, are: Texas, Louisiana, Michigan, Pennsylvania, Kentucky, Oklahoma, New Jersey, Kansas, Illinois, and California. (Note: the territory of Puerto Rico is excluded.) The regional aggregates of these states include: Region II, New Jersey; Region III, Pennsylvania; Region IV, Kentucky; Region V, Michigan and Illinois; Region VI, Texas, Louisiana and Oklahoma; Region VII, Kansas; and Region IX, California. However, not all derivatives are produced in all states. Refer to Table D-15 for a more detailed representation.

TABLE D-15. BENZENE CONSUMPTION IN THE U.S. BY EPA REGION 1979

Region/State or Territory	Quantities in MMBBL Consumption	% of Consumption	% of Production
New York/New Jersey-II			
Puerto Rico	2.47[a]	7.35	5.97
New Jersey	0.27[b]	0.81	0.66
	2.74	8.16	6.63
Middle Atlantic-II			
Pennsylvania	0.73[b]	2.17	1.76
Southeast-IV			
Kentucky	0.68[b]	2.01	1.64
Great Lakes-V			
Illinois	0.21[b]	0.64	0.52
Michigan	1.17[c]	3.49	2.84
	1.38	4.13	3.36
South Central-VI			
Louisiana	7.04[c]	20.93	17.00
Texas	20.11[d]	59.83	48.59
Oklahoma	0.48[e]	1.42	1.15
	27.63	82.18	66.14
Central-VII			
Kansas	0.26[b]	0.78	0.63
West-IX	0.20[b]	0.58	0.49
TOTAL U.S.	33.62	100.01	81.25[f]

NOTE:

[a] cyclohexane 1.23, and cumene 1.24 production.

[b] cumene production.

[c] ethylbenzene and styrene production.

[d] ethylbenzene and styrene 11.8, cyclohexane 4.83, and cumene 3.48 production

[e] cyclohexane production.

[f] total benzene production 41.38 million barrels.

Sources: Adapted from "C&EN's Top Fifty Chemical Products and Producers Special Report", Chemical and Engineering News, May 5, 1980, pp. 33-37.

Adapted from Environmental Protection Agency, Draft Environmental Impact Statement -- Benzene Emissions From Benzene Storage Tanks - Background Information for Proposed Standards, EPA-450/3-80-034SUD16a, September, 1980.

TABLE D-16. U.S. CONSUMPTION OF BENZENE AND ITS MAJOR DERIVATIVES BY SELECTED EPA REGIONS (QUANTITY IN MMBBL)

Benzene Consuming Products	Region III Middle Atlantic	Region IV Southeast	Region V Great Lakes	Region VI South Central	Region VIII Mountain
Ethylbenzene/ Styrene			1.17	18.84	
Cyclohexane				5.31	
Cumene	0.73	0.68	0.21	3.48	
Total Benzene	0.73	0.68	1.38	27.63	

Sources: Adapted from "C&EN's Top Fifty Chemical Products and Producers Special Report", Chemical and Engineering News, May 5, 1980, pp. 33-37.

Adapted from Environmental Protection Agency, Draft Environmental Impact Statement--Benzene Emissions from Benzene Storage Tanks - Background Information for Proposed Standards, EPA-450/3-80-034a, September 1980.

The major derivatives of benzene eventually yield end products that can be classified. The major end products are: polystyrene-25 percent, other styrene resins-10 percent, nylons-20 percent, and styrene-butadiene rubber-5 percent (Reference 25). About 25 percent of these products are ultimately used in consumer goods such as packaging, toys, sporting goods, disposables, novelties, and other small manufactured items (Reference 24). Another 17 percent of benzene derivatives, especially nylon fibers and resins, are used in the manufacture of household goods such as furniture, appliances, and carpeting (Reference 25). The transportation industry accounts for another 17 percent of benzene derivative consumption (Reference 25). Plastics, fibers, elastomers, and rubber are used in the production of boats, trucks, automobiles, and airplanes.

In characterizing the current regional consumption patterns, Table D-16 shows that Regions V and VI are the largest consumers of benzene and its major derivatives. These regions together consumed about 86 percent of the total benzene consumed in 1979, corresponding to about 70 percent of the total production. The remaining 14 percent was consumed in Regions II, III, IV, VII, and IX.

It is worthy to note that no consumption of benzene occurred in Region VIII; however, this region produces benzene, about 0.15 MMBBL (0.35 billion lb), as shown in Table D-13. Table D-16 shows the current consumption patterns for benzene and its major derivatives in the U.S. for 1979 by selected EPA regions. This table applies only to the selected five regions of synfuels production (see Section 3.1) chosen as likely locations of synfuels plants. Thus, Regions, II, VII, and IX are omitted.

D.4 SOURCES OF POLLUTANT EMISSIONS TO THE ENVIRONMENT FROM CONVENTIONAL FUELS TRANSPORT AND STORAGE

Synfuels products and by-products will be released into the environment during transportation, storage, and utilization in much the same manner as currently used fuels are. The existing conventional fuel and petroleum product distribution system is expected to be used, and the major end uses of the synfuel products are expected to be the same as for these products' petroleum-based counterparts. The existing distribution system is not expected to be significantly affected by any of the three scenarios for product buildup rates, although modifications may be necessary. The major sources of synfuels emissions to air, water, or land are through normal handling and end use operations, as well as accidental releases resulting from leaks and spills. Petroleum product storage and transportation accounts for approximately 4 percent of the nationwide volatile organic compound emissions and negligible amounts of the other criteria pollutants (Reference 27). Each of the sources of emissions is described in the following sections.

D.4.1 Transportation Modes Used for Conventional Fuels

Because synfuels products will be transported by several modes, as conventional fuels are now, the relative safety of each of these modes needs to be assessed to determine the potential exposure from predictable accidental release of products. Each of the transportation modes has inherent risks from accidents, as described in the following sections. Table D-17 presents hdyrocarbon emission factors for petroleum liquid transport operations. Products with the highest vapor pressures have the highest rate of emissions, which also should be considered in the analysis of various synfuels products (Reference 28).

D.4.1.1 Pipelines

Pipelines currently transport over 72 percent and 36 percent of the crude and refined petroleum products respectively, and virtually all of the natural gas in the U.S. This mode offers the most economical and generally the safest method for long-distance transport of liquid products. Although pipeline systems have good safety records, the economies of scale that make pipelines feasible also create a potential for large accidental releases of products, because the ability to detect a release and isolate the release point is limited. Environmental impacts from normal pipeline operations are very low, producing atmospheric emissions during venting. The other source is accidental release, primarily caused by pipeline rupture.

During 1979, a total of 1,970 gas pipeline and 251 liquid pipeline accidents occurred (Reference 29). Because more liquid than gaseous synfuel products will use pipelines, emphasis is placed on the former. Existing pipelines will be used for the most part under both the national goal and nominal production rate scenarios, with new pipelines connecting to existing trucklines. Additional pipelines may be needed for the

TABLE D-17. HYDROCARBON EMISSION FACTORS FOR PETROLEUM LIQUID TRANSPORTATION SOURCES (LB 10^3 GALLONS TRANSFERRED)

Source	Product Emission Factors					
	Gasoline	Crude Oil	Jet Naphtha	Jet Kerosene	No. 2 Fuel Oil	No. 6 Fuel Oil
RAILROAD TANK CARS/TRUCKS						
Submerged Loading						
Normal Service	5	3	1.5	0.02	0.01	0.0001
Balance Service	8	5	2.5	a	a	a
Splash Loading						
Normal Service	12	7	4	0.04	0.03	0.0003
Balance Service	1	0.6	0.3	a	a	a
Transit - Typical (Loaded)	0 - 0.1	b	b	b	b	b
- Extreme (Loaded)	0 - 0.8	b	b	b	b	b
- Typical (Empty)	0 - 0.11	b	b	b	b	b
- Extreme (Empty)	0 - 0.37	b	b	b	b	b
MARINE VESSELS						
Tanker Loading	1 - 2.4	0.7	0.5	0.005	0.005	0.00004
Barge Loading	1.3 - 3.3	1.7	1.2	0.0013	0.012	0.00009
Tanker Ballasting	0.8	0.6	b	b	b	b
Transit	3	1	0.7	0.005	0.005	0.00003

accelerated rate scenario, as a production rate of approximately 2.5 MMBPD of coal liquids is projected by the late 1990s. Although refined products would use existing pipelines, transporting coal liquids between the liquefaction plants and major terminals may necessitate new pipelines. Crude shale oil pipelines would also be needed to feed into existing pipelines to refineries in Colorado, the Rocky Mountain area, the Gulf Coast, or the Midwest. The crude shale oil pipelines would be required under all three scenarios by the late 1980's to handle a production rate of 0.2 to 0.5 MMBPD.

Based on a nine-year history of pipeline accidents, most accidents occur in crude oil pipelines, which in 1979 accounted for over 50 percent of the accidents (Ref. 30). Pipelines carrying gasoline, fuel oil, and LPG comprised almost 40 per cent of the total. The remainder of the accidents occurred in pipelines carrying various other products as shown in Table D-18. The causes of pipeline accidents vary with the greatest number occurring from ruptures in the pipe. Internal corrosion was responsible for less than 5 percent of the accidents. Because the corrosive properties of synfuels are unknown at this time, an accurate assessment of the potential for increased accidents from corrosion cannot be made.

As previously mentioned, the potential for accidental release of large amounts of products is high, even though the transportation system is relatively safe. In one pipeline accident near Devers, Texas in 1975, a single pipeline accident released more than 600,000 gallons of natural gas liquids. Although the fate of all the products on Table D-18 is unknown, damage losses were assessed because the products were emitted into water or soil and could not be recovered. During 1978, approximately 10 percent of all petroleum products spilled into waterways was from pipelines (Reference 31). LPG accounted for the greatest amount of product lost (approximately 59 percent), although LPG pipelines were involved in only 13.5 percent of the accidents. Many of these conventional products will have synfuel counterparts that will have the same accident potential. During the last nine years, pipeline accidents decreased slightly. This trend should continue as pipeline construction and operating standards become more stringent, making both conventional fuels and synfuel product transport safer.

Another factor to be considered in transporting synfuels by pipeline is the location of potential accidents. The state of Texas has consistently had the highest number of accidents since reporting records have been kept. However, this is more a function of the amount of pipeline in the state than a reflection of poor operation. The states with the highest incidence of pipeline accidents, accounting for 60 percent of the total, are in addition to Texas, Oklahoma, Kansas, Illinois, Wyoming, and Louisiana. All of these areas are expected to be involved in synfuel production or end use.

D.4.1.2 Water Carriers

Waterborne transport accounts for approximately 13 and 25 percent of the crude and refined petroleum products transport, respectively. The

TABLE D-18. LIQUID PIPELINE ACCIDENT SUMMARY - 1979

Commodity	No. of Accidents	(%)	Loss of Product (Barrels)	Percent of all Losses
Crude Oil	132	52.2	138,163	25.2
Anhydrous Ammonia	1	0.4	3,425	0.6
Jet Fuel	5	2.0	3,333	0.6
Gasoline	38	15.1	25,411	4.6
Oil and Gasoline	6	2.4	1,922	0.4
Turbine Fuel	1	0.4	150	0.0
Diesel Fuel	6	2.4	5,397	1.0
Fuel Oil	22	8.8	34,237	6.2
Condensate	1	0.4	584	0.1
LPG	34	13.5	321,446	58.6
NGL	5	2.0	14,601	2.7
TOTAL	251	99.6	548,669	100.0

major operational source of air and water pollutants are from tanker and barge loading and unloading and from ballasting. Most air pollution emissions consist of volatile organic compounds from gasoline handling, because of its higher vapor pressure than middle distillates.

Water transport is used in inland and ocean waterways as well as in the Great Lakes region. The largest amounts of oil discharges during 1978 occurred in river channels on the Atlantic seaboard, and accounted for about 43 percent of the oil spilled during 1978 (Reference 31). The second highest area is the Gulf Coast, accounting for approximately 14 percent. The largest quantity of products discharged were fuel oil, followed by crude oil, gasoline, and diesel oil. These products all entered local waters, contributing to potential water pollution impacts on aquatic life and human health.

The major sources of oil spills from water transport are bulk transfer of products at marine facilities and leaks from vessels. Hull and tank rupture or other structural failures are responsible for more than 70 percent of the accidents, while improper operation by personnel was responsible for only one percent.

By location, in 1978 the largest spills were in New Jersey, although the greatest number of accidents occurred in Louisiana. Other states with significant oil spills were Massachusetts, Delaware, and Rhode Island.

D.4.1.3 Tanker Trucks

Tanker trucks transport approximately 14 percent of the crude oil and 36 percent of the refined product in the United States. Because of their mobility, trucks will also be used in synfuels transport, unless their operating costs reduce their competitiveness. Tank truck emissions occur during truck loading at storage terminals and unloading at service stations. Trucks are also used for transporting packaged petroleum products such as lubricating oils, grease, and wax, which have little contact with personnel handling the products and do not release pollutants during transport. The most volatile product transported by trucks is gasoline, which releases organic vapors during unloading into service station storage tanks. The gasoline is either splashloaded or submerged-filled, with the latter method more frequently used due to volatile organic compound emission control requirements mandated by state implementation plans for those areas not meeting air quality standards for ozone.

The potential for accidental release of hazardous materials transported by trucks is related to the accident rate of all highway vehicles to which freight trucks are exposed, regardless of the commodity carried. Of the more than 11,000 incidents involving hazardous materials in transport, only 6 percent involved petroleum products (gasoline), although gasoline accounted for the largest amount of products lost during 1978. Highway vehicles were responsible for spills of 400,000 gallons of oil and 19,000 gallons of chemical compounds into waterways, accounting for only 2.8 percent and 0.9 percent respectively of the total amount of products entering waterways from all sources.

D.4.1.4 Railroads

Railroads carry the least amount of crude oil and refined petroleum products, accounting for 0.33 percent and 1.8 percent, respectively, during 1977. Railroads transport considerably higher quantities of petrochemicals and liquefied petroleum gases used as feedstocks between chemical plants. Pollutant releases consist primarily of organic compound vapors emitted during product loading, unloading, and transit operations as well as accidents when high pressure tank cars are ruptured. Accidental releases can also enter waterways, depending upon whether the products volatilize or remain liquid. Railroad safety has emerged as a major concern of government and railroad officials because of the resurgence of railroads as a means of transporting freight and passengers. Shipments of coal within the U.S., as well as to terminals for subsequent transport to overseas markets, is responsible for part of the industry's growth. It is expected that fuels and petrochemical transport will increase to take advantage of existing rail networks that can be used to serve synfuels markets. The condition of the nation's railroads, specifically the tracks, are of concern because more than 77 percent of the 11,000 accidents were caused by derailments. There were 1,035 accidents involving hazardous materials that required evacuation of more than 26,000 people in various states (Reference 32). The highest number of train accidents occurred in Illinois, while Texas had the greatest number of accidents involving hazardous materials.

Both of these areas will experience market penetration by synfuels, and railroads are expected to be used to transport heavy coal liquids to utility and industrial plants as well as to refineries for blending.

Water pollution caused by railroad accidents provides a potential for contamination only when products are spilled over or near receiving water. In 1978, 0.6 percent of the oil and 3.5 percent of the hazardous substances entering waterways was due to railroad accidents.

D.4.2 Product Storage

The storage of crude oil and refined petroleum products contributes a very small amount to the nation's air and water pollution. Approximately three percent of the nationwide volatile organic compound emissions to the atmosphere are from petroleum storage. There are virtually no air pollutants released from natural gas storage. Petroleum products are stored at refineries, marketing terminals, tank farms, and major end users' facilities, such as utility plants and airports. Emissions from storage tanks occur from breathing losses around tank seals and working losses from tank filling and unloading. Products having major pressures ranging from 1.52 to 9.1 psia account for the greatest amount of emissions, with gasoline accounting for over 50 percent (Reference 33). Crude oil storage accounts for 17 percent of the emissions. Synfuel product emissions will also depend on vapor pressures and, based on prelimnary information, are for the most part equivalent to emissions from petroleum products.

During 1977, leaks and spills from storage facilities accounted for 15,780 barrels of oil or 4.7 percent of all oil products entering U.S. waterways from accidents or incidents. Storage of hazardous materials accounted for 0.1 percent of all hazardous materials spilled into waterways. Waste waters associated with crude oil and product storage are mainly in the form of emulsified oil and suspended solids. During storage, the water and suspended solids in the crude oil separate, forming a bottom sludge below the oil layer. As the water layer is drawn off, emulsified oil is often lost to the sewer system and is high in chemical oxygen demand. Intermediate storage is frequently the source of polysulfide and iron sulfide suspended solids. Finished product storage can produce high biochemical oxygen demand and alkaline waste waters. The properties of synfuel products will need to be characterized to assess this after products are drawn off from the tanks. Tetraethyl lead used as an antiknock compound and having toxic properties can also contribute to waste steams; however, the amount of this compound is decreasing because of the requirements for unleaded gas. Tank cleaning can contribute large amounts of oils, COD, and suspended solids from petroleum products and may do the same with synfuels, depending upon their constituents.

As crude oil storage tanks are being modernized, waste waters will be reduced because of the use of mixed crude storage tanks and strict specifications on bottom sediment and water. The increased use of drying processes preceding product finishing can significantly reduce the water content of the product, thereby minimizing the quantity of waste water from finished product storage. This will be of benefit not only to storage of petroleum products but to synfuels as well if the latter products are similar in composition to petroleum.

REFERENCES

1. Energy Information Administration, Annual Report to Congress, Volume I, 1979.

2. Congressional Research Service, National Energy Transportation Volume I - Current Systems and Movements, May 1977.

3. Association of Oil Pipelines, Shifts in Petroleum Transportation, 1977.

4. Energy Information Administration, Energy Data Reports, Petroleum Refineries, Annual, January 1, 1978.

5. National Petroleum Council, Petroleum Storage and Transportation Capacities - Pipelines, Volume III, December 1979.

6. National Petroleum Council, Petroleum Storage and Transportation Capacities - Executive Summary, Volume I, December 1979.

7. U.S. Department of Energy, Petroleum Supply Alternatives for the Northern Tier and Inland States Through the Year 2000, Vol. I, October 31, 1979.

8. Energy Information Administration, Energy Data Reports, Petroleum Statement, Monthly, November 1979.

9. National Petroleum Council, Petroleum Storage and Transportation Capacities - Waterborne Transportation, Volume V, December 1979.

10. National Petroleum Council, Petroleum Storage and Transportation Capacities - Tank Cars/Trucks, Volume IV, December 1979.

11. Energy Information Administration, Energy Data Reports, Petroleum Statement, Annual, 1978.

12. National Petroleum Council, Petroleum Storage and Transportation Capacities - Inventory and Storage, Volume II, December 1979.

13. Energy Information Administration, State Energy Data Report, April 1980.

14. National Petroleum Council, Petroleum Storage and Transportation Capacities - Gas Pipeline, Volume VI, December 1979.

15. Adapted from Monthly Energy Review, EIA, U.S. DOE, February 1980.

16. Energy Source Book, The Center for Compliance Information, 1977.

17. Arthur D. Little, Inc., 1978 Petrochemical Industry Profile - A Report to the Petrochemical Energy Group, September 5, 1979.

18. The Condensed Chemical Dictionary, 9th Edition, 1977, p. 664.

19. Dictionary of Scientific and Technical Terms, 2nd Edition, 1978 McGraw-Hill.

20. "Allocation Rules Could Hurt Petrochemicals", Chemical and Engineering News Journal, June 2, 1980, page 5.

21. Arthur D. Little, Inc., The Petrochemical Industry and the U.S. Economy--A Report to the Petrochemical Energy Group, December, 1978.

22. "C&EN's Top Fifty Chemical Products and Producers Special Report", Chemical and Engineering News, May 5, 1980, pp. 33-37.

23. Stanford Research Institute, Chemical Origins and Markets--- Product Flow Charts Tables of Major Organics and Inorganics, Chemical Information Services, Menlo Park, California, 1967.

24. Environmental Protection Agency, Draft Environmental Impact Statement--Benzene Emissions from Benzene Storage Tanks, Background Information for Proposed Standards, EPA-450/3-80-034a, September, 1980.

25. Personal Communication with Robert Torene, Department of Commerce, Bureau of Census, Census of Transportation, September 8, 1980.

26. Standard & Poor's Industry Survey, 1980.

27. National Air Data Branch, U.S. Environmental Protection Agency, 1977 National Emissions Report, EPA-450/4-80-005, March 1980.

28. National Air Data Branch, U.S. Environmental Protection Agency, Compilation of Air Pollutant Emission Factor, AP-42, through supplement 10, February 1980.

29. Transportation System Center, U.S. Department of Transportation, Transportation Safety Information Report, May 1980.

30. Materials Transportation Bureau, U.S. Department of Transportation, Pipeline Accident Summary, June 1980.

31. U.S. Coast Guard, Polluting Incidents In and Around U.S. Waters, Calendar Years 1977 and 1978, January 1980.

32. Federal Railroad Administration, Accident/Incident Bulletin No. 147, Calendar Year 1978, October 1979.

33. U.S. Environmental Protection Agency, Evaluation of Hydrocarbon Emissions from Petroleum Liquid Storage, EPA-450/3-78-012, March 1978.

APPENDIX E

PHYSICAL AND CHEMICAL

CHARACTERIZATION OF SYNFUEL PRODUCTS

TABLE OF CONTENTS

		Page
E.1	PHYSICAL AND CHEMICAL CHARACTERIZATION OF SHALE OIL PRODUCTS	E-4
	E.1.1 Crude Shale Oil	E-4
	E.1.2 Shale Oil Derived Gasoline Stocks	E-9
	E.1.3 Shale Oil Derived JP-5.	E-9
	E.1.4 Shale Oil Derived Diesel Fuel Marine (DFM).	E-14
	E.1.5 Shale Oil Derived Residual Fuels.	E-14
E.2	PHYSICAL AND CHEMICAL CHARACTERIZATION OF DIRECT LIQUEFACTION LIQUIDS (SRC-II, H-COAL AND EDS). . .	E-14
	E.2.1 Direct Liquefaction Oils.	E-14
	E.2.2 Direct Liquefaction Naphtha	E-18
	E.2.3 Gasoline from Direct Liquefaction Processes	E-18
	E.2.4 No. 2 Fuel Oil from Direct Liquefaction . .	E-26
	E.2.5 Jet and Diesel Fuels from Direct Liquefaction.	E-26
E.3	CHEMICAL CHARACTERIZATION OF INDIRECT LIQUIDS. . .	E-26
	E.3.1 Fischer-Tropsch Gasoline.	E-26
	E.3.1.1 F-T By-Product Chemicals Composition .	E-31
	E.3.1.2 Tars, Oils and Phenols	E-31
	E.3.2 Mobil-M Gasoline.	E-36
	E.3.3 Methanol.	E-36
E.4	CHEMICAL CHARACTERIZATION OF COAL GASES.	E-38
	E.4.1 SNG	E-38
	E.4.2 Chemical Characterization of Low-/Medium-BTU Coal Gas	E-38

TABLES

		Page
Table E-1	Shale Oil and Petroleum Crude Physical Data Comparison	E-5
Table E-2	Shale Oil and Petroleum Crudes Chemical Data	E-7
Table E-3	Range of Trace Elements from Oil Shale and Petroleum Crudes(PPM)	E-8
Table E-4	Chemical Characterization of Heavy Distillates Shale Oil and Petro Crude.	E-10
Table E-5	Shale Oil Gasoline Stocks Analyses	E-11
Table E-6	Inspections of Hydrotreated and Reformed Gasoline from Pilot Plant Studies of Shale Oil Upgrading.	E-12
Table E-7	Shale Oil JP-5 Analyses.	E-13
Table E-8	Shale Oil DFM Analyses	E-15
Table E-9	Shale Oil Residual Fuel Analyses	E-16
Table E-10	Physical Properties of SRC II, H-Coal and EDS Raw Process Liquids.	E-17
Table E-11	Chemical Composition of SRC II, H-Coal and EDS Raw Process Liquids.	E-19
Table E-12	Physical Properties of Coal Derived Naphtha.	E-20
Table E-13	Detailed Chemical Analysis of SRC II, EDS, and H-Coal Naphthas.	E-21
Table E-14	Detailed Chemical Analysis of SRC II, EDS, and H-Coal Hydrotreated Naphthas	E-22
Table E-15	Physical Properties of Gasoline Produced from Differenct Syncrude Feedstocks	E-23
Table E-16	Comparison of Coal Derived Gasoline Composition.	E-24
Table E-17	Gasoline Comparison Specifications, Petroleum, and Coal-Derived	E-25
Table E-18	Properties of No. 2 Fuel Oil Refined from Petroleum and Syncrude	E-27

Table E-19	Physical Properties of Jet/Diesel Fuels from Coal Syncrude.	E-28
Table E-20	Detailed Specification for Jet Fuel, and Diesel Fuel.	E-29
Table E-21	Comparison of Principal Unleaded Gasoline Specifications with Estimated Fischer-Tropsch Gasoline Properties Case II.	E-30
Table E-22	By-Product Chemicals Produced by Fischer-Tropsch Synthesis.	E-32
Table E-23	Composition of Benzene Soluble Tars Produced in Synthane Gasification Process.	E-33
Table E-24	Composition of Tars and Oils Produced by Gasification of Various Coals in Lurgi Gasifiers .	E-34
Table E-25	Organic Composition of Lurgi Oil Produced at the Westfield Lurgi Facility	E-35
Table E-26	Estimated Composition of Phenol By-Product Stream.	E-31
Table E-27	Typical Properties of Finished Mobil Gasoline. . .	E-37
Table E-28	Estimated Crude Methanol Composition	E-37
Table E-29	Typical SNG Composition (Dry).	E-38
Table E-30	Gaseous Species Analysis Summary: Low-Btu Coal Gas	E-40
Table E-31	Trace and Minor Element Compositions of Low-Btu Product Gas.	E-41
Table E-32	Organic Compounds Identified from the Product Gas by SIM GC/MS	E-43

This appendix presents available data on the physical and chemical characteristics of products from shale oil, direct and indirect coal liquefaction, and coal gasification.

E.1 PHYSICAL AND CHEMICAL CHARACTERIZATION OF SHALE OIL PRODUCTS

As part of DOD's synthetic fuel development program, 10,000 barrels of shale oil crude were produced at Anvil Points, Colorado, by the Paraho process (direct heat retort). The crude was refined into synthetic gasoline, JP-4, JP-5, diesel fuel marine, and heavy fuel oil at the Gary Western refinery in 1976. The fuels were shipped to numerous military and private laboratories for specification tests, post-processing studies, combustor tests, engine tests, burner tests, and full-scale tests.

This program was expanded in 1977 when the Standard Oil Company of Ohio (SOHIO) was contracted by the U.S. Navy to refine up to 100,000 barrels of crude Paraho shale oil into military transportation fuels. The objective of the program was to demonstrate that conventional refining technology could be used to convert shale oil into stable, specification military fuels in sufficient volume to support an extensive engine testing program. Yields of JP-5 and diesel fuel marine (DFM) were to be maximized while minimizing the yield of residual fuel.

The crude shale was produced by Paraho Development Corporation over the three year period from 1976 to 1978. The crude shale oil was refined by Sohio's Toledo refinery in late 1978.

As a result of these programs, reasonably large amounts of data exist on the gross chemical and physical characteristics of crude shale oil and its products. Much of the work on the initial 10,000 barrel run has been completed. The testing of the 100,000 barrel run is in progress and only limited data are available. In some cases, the assessment of the differences between synfuel and petroleum products is limited because of the scarcity of comparable data on petroleum products.

The following comparisons use actual petroleum product data where available or ASTM or military specifications where no data were developed. Comparison to ASTM or military specifications eliminates the problem of selecting one representative petroleum product from the many that exist.

E.1.1 CRUDE SHALE OIL

Table E-1 compares nine crude shale oil samples to four petroleum crudes of varying API gravity. The RO-1 to RO-4 shale oil samples were from a blind API test program. The sources of those crude shale oils were either the Union B, Paraho Direct, Paraho Indirect or Colony Semiworks.

Because of its unique nature, crude shale oil requires special consideration in handling and processing. Compared to conventional petroleum, shale oil has several deleterious characteristics (Reference 1):

TABLE E-1. SHALE OIL AND PETROLEUM CRUDE PHYSICAL DATA COMPARISON

PHYSICAL PROPERTIES	CRUDE SHALE OILS									PETROLEUM CRUDES			
	RO-1[2]	RO-2[2]	RO-3[2]	RO-4[2]	PARAHO O.SHALE[1]	DOW TOSCO[3]	PARAHO[3]	SUPERIOR[3] TOSCO	OCCI-[3] DENTAL TOSCO	W. TEXAS[3] SOUR CRUDE	ARABIAN[4] LIGHT SAUDI ARABIA	ARABIAN[4] HEAVY SAUDI ARABIA	DURI[5] INDONESIA
Density (ASTMD-148-1) at 153°F	0.9323	0.9277	0.9254	0.9393	-	-	-	-	-	-	-		
Specific gravity @60°F	-	-	-	-	0.9315	-	-	-	-	-	0.8545		
Viscosity (ASTM D-445) SUS, 100°F	174.2	125.7	131.6	107.2	213	-	-	-	-	43.1			1844
Viscosity, SUS, 130°F	-	-	-	-	-	85.7	121.4	105.5	92 7	-	-		
Viscosity, (ATSM D-445), SUS, 210°F	42.3	39.4	40.2	38.1	44.9	-	-	-	-	-	-		
Pour Point (ASTM D-97), °F	+85	+80	+65	+70	+85	+75	+85	+80	+50	-30	-30	-30	+57
Molecular weight (cryoscopic)	274	265	272	230	-	-	-	-	-	-	-		
Gravity, °API	-	-	-	-	20.4	20.7	20.1	20.7	19.3	34.1	33.4	28.2	20.6
DISTILLATION, VOLUME %													
C_5 - 200°F													1.5
200 - 240													1.7
340 - 470													4.9
470 - 650													12.9
650+													78.9
IBP to 400°F	6.07	7.20	9.91	17.30									
400 to 650	27.99	30.17	25.87	25.96									
650 to 850	25.33	34.31	28.92	19.43									
850+	39.66	27.66	34.63	35.87									
IBP to 310°F						5.2	1.17	5.08	6.30				
310 to 375						4.54	1.13	4.58	4.53				
375 to 520						12.64	9.60	10.87	13.64				
520 to 680						30.85	28.92	27.37	33.07				
680 to 960						32.57	37.81	31.93	31.73				
960+						26.84	30.97	31.04	24.37				
(a)													
IBP to 212 °F											9.0	7.9	
212 to 302											8.4	6.8	
302 to 455											15.0	12.5	
455 to 650											19.8	16.4	
650 to 1049											32.5	26.3	
1049+											13.6	26.8	

(1) High nitrogen and oxygen content
(2) Low hydrogen/carbon ratio
(3) Low yield of 650°F minus material (30 vol.%)
(4) Moderate arsenic and iron content
(5) Suspended ash and water.

The high nitrogen content is probably the greatest concern, as it is an order of magnitude higher than that found in petroleum.

Nitrogen compounds are known to poison many petroleum processing catalysts, such as those used in fluid bed catalytic cracking, naphtha reforming, and hydrocracking. In addition, nitrogen compounds have been found to create stability problems in gasoline, jet, and diesel fuels. Fuel-bound nitrogen will also increase the NO_x emissions from practically any type of combustor. Finally, nitrogen compounds often have a peculiar and offensive odor that is difficult to remove.

The crude shale oils have consistently higher pour points than the petroleum crudes, including the heavy crude from Indonesia. The specific density of crude shale oil is generally higher than petroleum crudes. These facts are supported by the distillation data, which show greater volume percentages in the higher boiling fractions. Roughly 60 percent or higher of the crude shale boils above 650°F compared to 40 to 50 percent for two of the four crudes shown in Table E-1. Surprisingly, crude shale oil is much less viscous than the heavy Indonesia crude even though the API gravities are similar. This is probably because of the high aromatic content of the crude shale oil.

Table E-2 displays the elemental analysis of the crude oils shown in Table E-1. Only sulfur and nitrogen data were available for most of the petroleum crudes. The sulfur values for the shale oils are compatible with the normal range of sulfur values for petroleum crudes. As noted earlier, the nitrogen content of crude shale oils greatly exceeds that of most petroleum crudes. The nitrogen is generally believed to exist as heteroatoms in ring compounds. Fortunately, mild hydrotreating can reduce the nitrogen content to acceptable levels.

Some trace element (As, Na, K, V, Ni, Fe) data for shale oil and petroleum crudes are also contained in Table E-2. More extensive data from additional shale oil and petroleum crudes and their products is found in Table E-3. In crude shale oil, only the elements As, Fe, and Th are present in quantities that exceed the amounts present in petroleum crude by an order of magnitude, as shown in Table E-3. Most of the elements are present in the same order of magnitude or less than in petroleum crudes. It is noteworthy that the vanadium content of shale oils is 100 times less than typical petroleum levels. This finding could have a significant effect on the sulfate emissions from the combustion of crude shale oil. The lower vanadium content of crude shale oil will probably lead to less H_2SO_4 formation, because of vanadium's catalytic properties. The arsenic, as well as most of the other elements, is readily removed during hydrotreatment (Columns 6 & 7).

TABLE E-2. SHALE OIL AND PETROLEUM CRUDES CHEMICAL DATA

Chemical Properties	RO-1[2]	RO-2[2]	RO-3[2]	RO-4[2]	TOSCO II[6]	PARAHO[1]	DOW TOSCO[3]	PARAHO[3]	Superior TOSCO[3]	Occidental TOSCO[3]	W. Texas Sour Crude[10]	Arabian Light, Saudi Arabia[4]	Arabian Heavy, Saudi Arabia[4]	Dur: Indonesia[5]
ELEMENTAL ANALYSIS														
Carbon, Wt %	85.6	85.1	85.4	85.1	84.7	83.7	84.5	84.8	84.1	84.0	-	-	-	-
Hydrogen	11.6	11.5	11.6	11.0	11.3	11.2	11.1	11.5	11.3	10.7	-	-	-	-
Oxygen	1.2	1.2	1.1	1.1	1.4	1.4	1.3	1.2	1.6	1.9	-	-	-	-
Sulfur	0.68	0.69	0.81	0.80	0.80	0.70	0.70	0.58	0.77	0.43	1.4	1.8	2.84	0.21
Nitrogen	2.17	2.04	1.82	2.05	1.8	2.02	1.99	2.04	2.06	1.96	0.1	(0.08)[6]	-	-
METALS, PPM														
As	33	42	47	55	-	7.5	13.9	20.9	8.0	32.0	-	-	-	-
Na	2.1	2.5	2.9	3.1	-	<0.3	-	-	-	-	-	-	-	-
K	-	-	-	-	-	0.17	-	-	-	-	-	-	-	-
V	0.12	0.10	0.54	0.55	-	0.17	-	-	-	-	4.4	(0)[5]	-	-
Ni	2.0	1.3	1.3	2.4	-	2.4	-	-	-	-	2.6	-	-	-
Fe	40	46	4.9	43	-	53	-	-	-	-	2.0	(3)[5]	-	-

TABLE E-3. RANGE OF TRACE ELEMENTS FROM OIL SHALE AND PETROLEUM CRUDES (PPM)

ELEMENTS	Oil Shale Reference[7]	RO-1[2]	RO-2[2]	RO-3[2]	RO-4[2]	Crude Shale 4601[8]	Hydro-treated 4606[8]	Heavy Fuel Oil From Shale Oil[9]	Shale Oil JP-5 (4608)[8]	Shale Oil JP-8 (4609)[8]	Domestic Crude Oil (Avg)[10]	No. 6 Fuel Oil[11]	Petroleum Residual Oil[10,12]	Petroleum Residual Oil[13]
Al	0.1 - 36	0.5	2	2	4	1.5	0.040	0.68	0.048	0.056		19		75
Ag		<0.02	<0.02	<0.02	<0.02	ND	<0.01		<0.02	<0.02		1.0		0.2
As	5 - 65	33	42	47	55	29	<0.5		0.5	ND	0.17		0.3	0.02
B	3 - 7										0.19		0.11	0.3
Ba	0.01 - 21										0.17		0.67	4
Be	0.02	<0.02	<0.02	<0.02	<0.02	ND	<0.005		<0.01	<0.01		<0.15	0.09	
Ca	0.5 - 39	2	11	5	37	3.8	0.052	3.5	ND	ND		120		120
Cd	0.01 - 0.2	<0.02	<0.02	<0.02	<0.02	0.01	ND		<0.02	<0.02	ND	<0.15	2.0	0.2
Co	0.8 - 7	0.82	0.52	0.10	0.60	1.0	ND	0.75	<0.09	<0.06		2.3	2.2	3
Cr	0.04 - 0.2	0.02	0.05	0.06	0.07	0.036	0.010	0.11	ND	ND		1.2	1.8	3
Cu	0.1 - 1.5	0.08	0.05	0.08	0.28	0.035	0.030	0.19	<0.02	<0.02	ND	1.8	10.0	2.5
F	0.1 - 3													
Fe	6 - 390	40	46	4.9	43	57	0.24		<0.01	<0.01		16	7.3	150
Hg	0.09 - 0.65	<3	<3	<3	<3	ND	ND		ND	ND	ND	NR	0.02	0.01
Mg	0.4 - 100	1.04	3.7	1.7	7.4	0.1	0.002	0.53	ND	ND		25		75
Mn	0.1 - 4	0.11	0.46	0.67	0.22	0.092	<0.005	0.03	<0.02	<0.02	0.46	0.4	2.1	2.5
Mo	5 - 14	0.03	0.02	0.05	0.06	0.07	ND	0.054	ND	ND		7.0	2.3	0.25
Na	19	2.1	2.5	2.9	3.1	1.1	0.15	3.1	0.14	0.06		141	50.1	35
Ni	1.1 - 5.5	2.0	1.25	1.26	2.4	3.2	<0.05	2.5	ND	ND	38.7	37		120
Pb	0.02 - 7.8	0.05	0.20	0.17	0.09	0.06	ND	0.15	<0.06	<0.06		0.8	0.04	2
Sb	0.008 - 0.54	<2	<2	<2	<2	ND	ND		ND	ND	0.17	<0.15	0.04	0.02
Se	0.08 - 0.2	<2	<2	<2	<2	ND	ND		ND	ND	ND	0.9	0.14	1
Si	110	1	5	3	9	7.4	<0.3	2.6	ND	ND		21		300
Sn		0.2	0.2	0.4	0.4	<0.5	<0.5	0.44	ND	ND	2.8	<0.2		0.3
Sr		0.013	0.07	0.03	0.27	0.034	0.003		ND	ND		1		0.1
Th		2	2	1.5	<1	ND	ND		ND	ND		<0.1		0.2
Ti	1 - 36	<1	1	<1	3	<0.4	ND	0.096	ND	ND		1	5.41	0.4
V	0.3 - 60	0.12	0.10	0.54	0.55	0.28	<0.03	0.76	ND	ND	15.7	48	57.1	180
Zn	0.075 - 3	0.61	0.79	1.9	1.1	1.7	0.064	<0.3	<0.02	0.02	2.8	4	0.19	4
Zr	0.1							0.035				0.8		2

a. Based the elemental analysis of the ash and 0.008% ash content

Additional chemical characterization data are contained in Table E-4. The aromatic content of the 410°-698°F distillate from shale oil was about 29 weight percent. Similar distillate products from two petroleum crudes had only 18 percent or less aromatics. One important difference between crude oil and crude shale oil is the presence of significant amounts of olefins in crude shale oil. Olefins are more reactive than paraffins and tend to make crude shale oil less stable than crude oil.

E.1.2 SHALE OIL DERIVED GASOLINE STOCKS

Gasoline was produced from both the 10,000 barrel and 100,000 barrel retort and refining efforts under the DOD shale oil program. Table E-5 compares the two shale oil gasolines produced to military specification and to common regular leaded and unleaded gasolines. The Toledo run was not reformed; it would need to be, to be used. The Gary Western run was reformed, but still had a low octane rating and would not be suitable for use. The data in Table E-5 indicate that the Reid Vapor Pressure (RVP) of the reformed shale oil gasoline is slightly higher than that of the regular leaded and unleaded gasolines as well as the military specifications. Other data generated by Shelton (Reference 35), however, indicate RVPs of 7 to 15 for petroleum gasolines. Hence, it is not clear whether there would be significant differences in fugitive emissions between the reformed shale oil gasoline and other gasolines. Table E-6 provides more details on the results of reforming on the chemical make-up of the gasoline. While the Research Octane Number (RON) is increased and nitrogen contents decreased, the aromatic contents increased dramatically at the expense of the naphthenes. The presence of large amounts of aromatic compounds might affect the properties of shale oil gasoline and will certainly affect the consequences of shale oil gasolines on health.

E.1.3 SHALE OIL DERIVED JP-5

The results of the DOD 10,000 barrel (Gary Western) and 100,000 barrel (Toledo) refining of Paraho shale oil for JP-5 fuels are reported in Table E-7. The Gary Western run received only clay treatment while the Toledo run was both hydrotreated and acid/clay treated. Note that the thermal stability of the untreated Toledo fuel is poor. However, after the nitrogen compounds are selectively removed by acid treating, the fuel's stability as determined by gum and JFTOT (ASTM D-3241) measurements is very good. In addition, storage stability characteristics of the fuels were tested by aging the material for 1 month at 140°F and then repeating the JFTOT and gum tests. The aging test results for a composite sample of all treated JP-5 produced at the refinery indicate that this fuel has very good storage stability properties.

Compared to a typical JP-5 fuel the shale jet fuel has a slightly lower distillation curve, but one within military specifications. Aromatic content of both the finished Toledo and Gary Western runs is higher than the typical JP-5 fuel, but generally within military specifications. Trace element composition of the JP-5/8 fuels appears to be quite low (Table E-3) Arsenic, at 0.5 ppm, appears to be the element with the highest

TABLE E-4. CHEMICAL CHARACTERIZATION OF HEAVY DISTILLATES SHALE OIL AND PETRO CRUDE

Oil Samples	Wt % Whole Oil	Wt % of Total Hydrocarbon Fraction		
		410 - 698 Distillation	698 - 985 Distillation	<995°F Residue
Paraho Oil Shale[14]				
Saturates	41	30	35	21
Olefins	27	25	24	12
Aromatics	24	28	35	46
Superior TOSCO Oil Shale[14]				
Saturates	39	26	32	29
Olefins	29	33	22	20
Aromatics	30	29	42	48
Union "B" Oil Shale[5]				
Saturates	19			
Olefins	7			
Aromatics	41			
Nigeria, Bass River Crude Oil[5]				
Saturates				
Olefins				
Aromatics		17.8[a]		
California (Huntington Beach) Crude[16]				
Paraffins		61[b]		
Naphthene		22[b]		
Aromatic		17[b]		

[a] 400-650°F

[b] 482-572°F

TABLE E-5. SHALE OIL GASOLINE STOCKS ANALYSES

Property	Toledo [1],[a]	Gary Western [9]	Regular Leaded Gasoline [6]	MIL-G-3056C [9]	Unleaded Gasoline [6]
API Gravity	54.7	—	61.8		58.2
RVP, psi	5.6	11.9	9.6	7 - 9	9.2
Distillation (D-86)					
IBP, °F	200	86	87	—	87
10	249	136	123	131 - 158	128
50	283	192	209	194 - 239	225
90	317	342	342	293 - 356	342
EP	370	395	412	—	
% Recovered	98.0	—	98	—	
% Residual	1.0	1.0	1.0	2 (Max)	1.8
Paraffins	49.95	44.0	—	—	—
Naphthenes	34.0	8	—	—	—
Alkylbenzenes	15.20	—	—	—	—
Indans + Tetralins	0.51	—	—	—	—
Aromatics	0.32	—	—	—	—
Olefins		36	23	—	29
Nitrogen, Wt %	0.078	0.03	0.49	—	0.05
Research Octane, Clear	47[2]	87	93.4	95	91.0
Sulfur, Wt %	—	0.007	0.01	0.15	0.003

[a] Unreformed

TABLE E-6. COMPARISONS OF HYDROTREATED AND REFORMED GASOLINE FROM PILOT PLANT STUDIES OF SHALE OIL UPGRADING [7]

Property	Gasoline Hydrotreated C_6 157°C	Gasoline Reformed C_6 157°C
API Gravity	57.5	50.5
Research Octane Number	47	93
Paraffins, Vol %	58.9	42.1
Naphthenes, Vol %	30.7	6.8
Aromatics, Vol %	10.4	51.1
H/C Molar	2.03	1.61
Nitrogen, PPM	400	0.5

TABLE E-7. SHALE OIL JP-5 ANALYSES

Untreated JP-5	Gary Western[9]	Toledo[1]	Mil Spec[1]	Typical Petroleum JP-5[9]
API Gravity	44.4	42.7	API gr <48	42.6
Flash, °F	140	158	140 Min	145
Freeze, °F	-30	-57	-51 Max	—
Existent gum (D-381) Mg/100cc	144.2	Not Run	7.0 Max	--
Distillation (D-86)				
IBP, °F	342	370	R	362
10	376	384	401 Max	390
50	426	400	R	422
90	492	436	R	480
EP	514	480	554 Max	502
Nitrogen, Wt %		0.29	—	—
Paraffins, Vol %		42.5	—	—
Naphthenes, Vol %		36.0	—	—
Aromatics, Vol %	25.8	21.5	25% Max	16
Treated JP-5	**Gary Western[a]**	**Toledo[b]**	**Mil Spec**	
API Gravity	44.4	43.6	36<API gr<48	
Nitrogen, PPM		0.5	—	
TAN, mg KOH/gm		0.005	0.015 Max	
WSIM	58	95	85 Min	
Existent gum Mg/100cc	113.2	1.4		
JFTOT at 500°F				
Visual		1	< 3	
Max Spun Rate		0	<17	
Max ΔP mm Hg		0.5	<25	
Paraffins, Vol %		43.7		
Naphthenes, Vol %		34.5		
Aromatics, Vol %	25.6	21.8	25% Max	

[a] Clay treatment only

[b] Hydrotreatment plus acid/clay treatment

concentration. No petroleum based analyses were available, but that level of arsenic should not be significant.

E.1.4 SHALE OIL DERIVED DIESEL FUEL MARINE (DFM)

The Gary Western and Toledo refinery DFM runs are compared to military specifications in Table E-8. The improved nitrogen removal possible by hydrotreating and acid/clay treatment is evident from the comparison between treated Gary Western and Toledo runs. It is expected that the product should have good combustion properties because the high octane number (50.1) and the hydrogen weight percent (approximately 13 percent).

E.1.5 SHALE OIL DERIVED RESIDUAL FUELS

The residual fuel produced during the Toledo run met all military specifications (except for pour point) for a low sulfur, high power No. 6 fuel oil. The sulfur concentration was well below the military specification and that of a typical No. 6 fuel oil (Table E-9). Arsenic levels and trace metals are at or below petroleum residual fuel analyses (Table E-3). In particular, the vanadium content is very low and should lead to lower H_2SO_4 emissions during combustion.

E.2 PHYSICAL AND CHEMICAL CHARACTERIZATION OF DIRECT LIQUEFACTION LIQUIDS (SRC II, H-COAL, AND EDS)

The following sections discuss the physical and chemical composition of raw and hydrotreated direct liquefaction products.

E.2.1 DIRECT LIQUEFACTION OILS

All three of the major direct coal liquefaction processes, SRC II, H-Coal, and Exxon Donor Solvent (EDS), can be run to produce different process oils. For example, H-coal can be run in a boiler-fuel mode (maximizing residuum) or in a syncrude mode (wide range boiling fractions production). This section presents data for the syncrude mode (H-coal), raw process liquid (EDS), and whole process oil (SRC II). The physical properties of these three liquids are shown in Table E-10, and are compared to Arabian light and heavy crudes. Because coal type can affect the product, information on SRC II liquids from Illinois No.6 (high sulfur coal) and Wyodak (low sulfur coal) are included. In general, the syncrudes from the three processes are much more dense than the petroleum crudes. However, because the viscosities of the syncrudes are much lower than the petroleum crudes, there should be no pumping problems. The raw syncrudes also exhibit a low pour point, which will aid in handling and transfer operations.

While the sulfur content of the raw syncrudes would classifiy them as a low sulfur feed, it and the high nitrogen levels are too high for the catalysts used in later refinery steps. Before use, the raw syncrudes will be upgraded via hydrotreating to remove the sulfur and nitrogen. The hydrotreated syncrudes for SRC II and H-coal are also listed in Table E-10.

TABLE E-8. SHALE OIL DFM ANALYSES

Untreated DFM	Gary Western	Toledo[1]	Mil Spec[1]
API Gravity		36.8	R
Pour, °F		0	20 Max
Flash, °F		162	140 Min
Distillation (D-86)			
IBP		396	—
10		456	—
50		512	R
90		562	675 Max
EP		582	725 Max
% Res		1.0	3 Max
Nitrogen, Wt %		0.33	
Cetane Index		52.5	45 Min
Treated DFM	**Gary Western[9]**	**Toledo[a]**	**Mil Spec**
API Gravity	33.2	38.1	R
Carbon, Wt %	86.4	86.27	—
Hydrogen, Wt %	12.62	13.28	—
Nitrogen, ppm	2800	3.9	
Paraffins, Vol %		45.5	—
Naphthenes, Vol %		25.5	—
Aromatics, Vol %	34 35	29.0	—
TAN, Mg KOH/gm		0.010	0.30 Max
Cetane Index	55.2	50.1	45 Min
ASTM 2274 Mg/100 cc (acc. Oxid. test)		0.51	2.5 Max
Distillation (D-86)			
IBP	446		
10%	525		
50%	599		
90%	662		
EP	702		

[a] Hydrotreatment + acid/clay

TABLE E-9. SHALE OIL RESIDUAL FUEL ANALYSES

Property	Gary Western	Toledo[1]	No. 6 Fuel Oil[11]	Fuel Oil, Burner MIL-F-859F[9]
API Gravity, 60°F	30	29.6	25.0	11.5 (min)
Pour Point, °F	90	80	95	15 (max)
Rams Bottom Carbon, Wt	—	0.096	—	—
Asphaltenes, Wt		0.059	—	—
Vis. at 210°F, CST		2.00	—	—
Distillation (D-2887)				
IBP, °F		331	—	—
10		582	—	—
50		732	—	—
90		900	—	—
EP		1032	—	—
Carbon Wt %	85.8	86.71	87.02	—
Hydrogen, Wt %	11.3	12.75	12.49	—
Nitrogen, Wt %	1.4	0.44	0.23	—
Oxygen, %	0.992	182 ppm		—
Sulfur, %	0.5	20 ppm	0.24	3.5 (max)
Saturates, Vol %		57.1[a]		—
Aromatics, Vol %		42.9[a]		—
Iron, ppm		0.10		—
Arsenic, ppm		0.4		—
Vanadium, ppm		0.02		—
Sodium, ppm		0.6		—
Potassium, ppm		0.6		—

[a] Pilot plant studies

TABLE E-10. PHYSICAL PROPERTIES OF SRC II, H-COAL AND EDS RAW PROCESS LIQUIDS

Property	SRC II Whole Process Oil (18)	SRC II High Severity Hydrotreating (19)	SRC II Intermediate Hydrotreatment (19)	Wyodak H-coal Syncrude (20)	Wyodak H-coal Medium Severity Hydrotreat-treatment (20)	H-Coal Illinois No. 6 Syncrude (20)	H-Coal Illinois No. 6 High Severity Hydrotreatment (20)	EDS Raw Liquid Product (21)	Arabian Light Saudi Arabia (4)	Arabian Heavy, Saudi (4)
Gravity, API @ 60 F	18.6	39.3	32.7	35.1	41.4	25.8	35.3	3.5	33.4	28.2
Kinematic Viscosity @ 100 F. CSt	2.196			1.225		1.645			6.14	18.9
Pour Point, F	<-80				-45				-30	-30
H_2 Consumption (scf/bbl)	-	3100	2000	-	838	-	1613	-		
Molecular wt.	132			~130		147				
Ultimate Analysis										
Carbon, wt%	84.61	86.2	88.2	86.20		86.96		89.22		
Hydrogen, wt%	10.46	13.8	11.8	12.74		11.39		8.66		
Sulfur, wt%	0.29	5ppm	21ppm	0.041	0.64ppm	0.32	5.4ppm	0.49	1.8	2.84
Nitrogen, wt%	0.85	0.25ppm	52ppm	0.17	0.65ppm	0.46	0.15ppm	0.71		
Oxygen, wt%	3.79	40ppm	680ppm	0.85		1.80		1.93		
Ash, ppm.	40			<20		90				
Distillation Temperature, ^{o}F										
I.B.P. (D-86)	154							403		
10	281								190	215
50	438								650	750
90	597								1050	1200
EP	850							930		
St./5 (Simulated GC), F	56/189	65/181	66/179	53/156		56/177				
10/30	241/379	215/276	213/286	173/261		213/333				
50	424	365	380	354		404				
70/90	473/562	410/499	422/528	429/535		476/588				
95/99	642/820	546/648	581/705	602/785		654/765				

Clearly, even moderate hydrotreating is capable of reducing the nitrogen levels to 50 ppm. Hydrotreatment also reduces the fraction of high boiling point materials, as a result of converting aromatic compounds to naphthenes. Table E-11 contains information on the chemical composition of the raw and hydrotreated SRC II syncrudes and the hydrotreated H-coal and EDS process liquids. Hydrotreatment can virtually eliminate the aromatic content of SRC II syncrude; while this might be a control method for hazardous aromatics (SRC II contains 9 percent phenols), process economics will probably preclude severe hydrotreatment. Studies are needed to determine what degree of hydrotreatment is required to reduce hazardous aromatic compounds to an acceptable level.

E.2.2 DIRECT LIQUEFACTION NAPHTHA

An important intermediate product is the naphtha feedstock obtained from the direct liquefaction processes which will be used to produce transportation fuels. Table E-12 contains the physical data on the coal-derived naphtha as received and after hydrotreating. Hydrotreatment raises the API gravity slightly, and almost entirely removes the sulfur and nitrogen content of the naphtha. While the aromatic content is reduced, the olefinic fraction is removed even under mild (500-800 SCF H_2/bbl) hydrotreatment.

A detailed look at the change in the chemical composition of the naphthas before and after hydrotreating is given in Tables E-13 and E-14. Before hydrotreating, the polar fraction contained significant amounts (3.9 percent) of phenol. After treatment, the polar fraction is removed. Based simply on the known toxicity of phenols, one would expect a reduced level of hazard associated with the hydrotreated naphtha.

E.2.3 GASOLINE FROM DIRECT LIQUEFACTION PROCESSES

The naphtha feedstock discussed in Section 2.2 is not suitable for direct use as a gasoline because of its low octane number (40-70). Another step, reforming, is required to produce a commercial-grade gasoline. Table E-15 shows the results of reforming the naphthas previously discussed. The aromatic content (Table E-16) was dramatically increased at the expense of the naphthenes. A high (91-99) Research Octane Number was obtained. Compared to the API standard for petroleum gasoline, the direct liquefaction gasolines have more aromatics and naphthenes and less paraffins. Furthermore, the SRC gasoline has more benzene and hydroalkylaromatics than the petroleum gasoline. The extreme case was the H-coal sample (636/220-5), which contains 62 weight percent of C8 or higher alkylbenzenes. Table E-17 provides an overview of the results of reforming the naphthas to gasoline. The specific composition of the chemical classes may be different as noted above for the aromatics, but in general they are similar to the petroleum-based gasoline.

TABLE E-11. CHEMICAL COMPOSITION OF SRC II, H-COAL AND EDS RAW PROCESS LIQUIDS

Chemical Properties, LV%	SRC II Whole Process Oil (18) WOW-3666	SRC II High Severity (19) Hydrotreatment	SRC II Intermediate Severity (20) Hydrotreatment	WYODAK H-Coal (20) Medium Severity Hydrotreatment	H-Coal Illinois No. 6 High-Severity (20) Hydrotreatment
Paraffins (total)	(4.4)	(3.3)	(4.5)	(15.3)	(7.0)
Naphthenes (total)	(40.2)	(93.2)	(46.8)	(73.2)	(74.5)
Monocycloparaffins	11.9				
Bicycloparaffins	8.4				
Tricycloparaffins	19.9				
Aromatics (total)	(55.2)	(3.9)	(48.7)	(11.5)	(18.5)
Alkylbenzenes	15.7				
Indanes and tetralins	26.4				
Dinapthenebenzenes	3.7				
Napthalenes	9.4				

TABLE E-12. PHYSICAL PROPERTIES OF COAL-DERIVED NAPHTHA

Property	SRC PROCESS NAPHTHA (21)		EDS PROCESS NAPHTHAS (22)		H-COAL PROCESS NAPHTHA (23)	
	As Received	Hydrotreated	As Received	Hydrotreated	As Received	Hydrotreated
Sample No.	3777-1	3777-2	3531-7	3531-12	3531-1-2	3531-4
API @ 60 F	49.7	52.0	38.4	44.1	43.7	46.8
Sp. Gr. @ 60 F	0.7809	0.7711	0.8328	0.8058	0.8076	0.7936
Distillation ASTM D-86						
IBP, F	107	136	142	202	132	153
5%	134	168	178	215	170	185
10%	157	180	208	226	189	199
20%	188	196	244	237	215	217
30%	209	209	268	250	233	231
40%	226	220	286	264	251	246
50%	243	233	302	287	260	263
60%	261	249	316	305	292	284
70%	279	270	319	322	312	306
80%	292	289	339	336	328	329
90%	316	311	348	351	251	352
95%	346	330	-	360	373	367
EP F	367	388	380	374	396	393
% Over	97.5	98.5	-	98.6	99.0	99.0
Hydrogen, Wt %	12.91	13.66	11.80	13.13	12.80	13.59
Carbon, Wt %	85.87	86.00	86.24	86.18	85.90	86.45
Sulfur, Wt ppm	4400	0.22	9,978	0.1	1289	3.9
Nitrogen, Wt ppm	5140	0.8	2,097	0.2	1930	0.63
Oxygen, Wt ppm	7814	359	13,700	98.0	5944	34
Chloride, Wt ppm	195	3.8	18	1.0	23	4
FIA, Vol %						
A	-	18.8	-	20.1		
P&N	-	81.2	-	79.9		
M S Hydrocarbon Types, Vol %						
Aromatics/Polars	23.0[a]	22.0	34.0[c]	21.62	22.8[d]	17.6
Naphtheres	37.1	52.8	42.9	65.48	55.5	63.4
Paraffins	31.5	25.2	13.2	12.90	16.2	19.0
Olefins	8.4	-	9.9	-	5.5	-
Bromine Index	30.0[b]	101.0	39.[b]	124.0	19.3[b]	296
RON, Clear	80.8	70.9	83.2	64.5	80.3	66.8
N Jet Gum, mg/100 ml	12.0	-	44.0	-	-	-
H_2 Consumption (SCF/BBL)	N/A	560	N/A	850	N/A	480

[a] Includes 6.8% Polars

[b] Bromine number

[c] Includes 8.9% Polars

[d] Includes 4.2% Polars

[e] 5.2/0.0 wt/Vol-% not shown

TABLE E-13. DETAILED CHEMICAL ANALYSIS OF SRC II, EDS, AND H-COAL NAPHTHAS

Series	Hydrocarbon Types	SRC II Naphtha (3777-1) [21]		EDS Naphtha (3531-7) [22]		H-Coal Naphtha (3531-1-2) [23]
		Wt %	Vol %	Wt %	Vol %	Vol %
C_nH_{2n+2}	Paraffins	27.8	31.5	11.3	13.2	16.2
	Naphthenes					
C_nH_{2n}	Monocycloparaffins	28.4	28.9	-	-	48.1
	Cyclopentanes	-	-	9.8	10.4	-
	Cyclohexanes	-	-	14.1	15.0	-
C_nH_{2n-2}	Bi, Dicycloparaffins	7.1	7.2	10.9	10.5	7.2
C_nH_{2n-4}	Tricycloparaffins	1.0	1.0	7.4	7.0	0.2
	Aromatics					
C_nH_{2n-6}	Alkylbenzenes	17.4	15.6	17.5	17.0	12.7
C_nH_{2n-8}	Indanes/Tetralins	0.7	0.6	8.7	7.9	5.8
C_nH_{2n-10}	Dinaphthenebenzenes	<0.1	Trace	0.5	0.4	-
C_nH_{2n-12}	Naphthalenes	<0.05	Trace	Trace	Trace	0.1
	Polars					
$C_nH_{2n-5}N$	Pyridines	3.0	2.3	-	-	0.8
$C_nH_{2n-4}O$	Furans	-	-	Trace	Trace	-
$C_nH_{2n-6}O$	Phenols	4.5	3.2	9.1	7.4	3.1
$C_nH_{2n-7}N$	Naphthenopyridines	Trace	Trace	0.1	0.1	-
$C_nH_{2n-4}S$	Thiophenes	1.6	1.3	1.5	1.2	0.3
	Olefins [a]					
C_nH_{2n}	Monoolefins	1.9	2.1	2.3	2.6	1.3
C_nH_{2n-2}	Diolefins and/or Monocycloolefins	5.1	5.0	5.4	5.8	3.7
C_nH_{2n-4}	Triolefins and/or Dicycloolefins	1.4	1.3	1.4	1.5	0.5
	Total	100.0	100.0	100.0	100.0	100.0

[a] The total olefin number was obtained by SiO_2 separation, but the mono-, di-, tri-olefin split is estimated since no calibration coefficients are available.

TABLE E-14. DETAILED CHEMICAL ANALYSIS OF SRC II, EDS, AND H-COAL HYDROTREATED NAPHTHAS

	Hydrotreated SRC-II Naphtha (3777-2)		Hydrotreated EDS Naphtha (3531-12)		Hydrotreated H-Coal Naphtha (3531-4)	
Product Distribution	Wt-%	Vol-%	Wt-%	Vol-%	Wt-%	Vol-%
C_3	0.1	0.1	---	---		
C_4	1.2	1.6	---	---	1.8*	2.4*
n-Pentane	2.4	2.9	0.4	0.5		
Isopentane	0.9	1.1	0.1	0.1		
C_6 Plus	95.4	94.3	99.5	99.4	98.2	97.6
Total	100.0	100.0	100.0	100.0	100.0	100.0
MS Analysis of C_6 Plus Fraction						
Hydrocarbon Types		Vol-%		Vol-%		Vol-%
Paraffins		25.20		12.90		15.96
Naphthenes						
Monocycloparaffins		47.28		50.15		55.02
Bi, Dicycloparaffins		5.57		15.33		9.49
Tricycloparaffins		0.0		0.0		0.09
Aromatics						
Alkylbenzenes		21.53		17.82		16.54
Indans, Tetralins		0.42		3.80		2.83
Naphthalenes		0.0		0.0		0.07
Total		100.00		100.00		100.00

* Includes 0.4 wt/Vol-% of cyclopentane.

TABLE E-15. PHYSICAL PROPERTIES OF GASOLINE PRODUCED FROM DIFFERENT SYNCRUDE FEEDSTOCKS[27]

Raw Feed (Feedstock From Synthetic Crude)	SRC-II Naphtha[21] (3477-2)	EDS Naphtha[22] (3531-7)	H-Coal Gas-Oil[18] (96-3330A)	H-Coal Gas-Oil[18] (96-3330A)	H-Coal Gas-Oil[24] (37-1117/8)	H-Coal Naphtha[23] (3531-1-2)
Refining Techniques						
First Stage	Hydrotreating	Mild Hydrocracking	Mild Hydrocracking	Heavy Hydrocracking	Moderate Hydrotreating	Moderate Hydrotreating
Second Stage	Platformed	Platformed	Series Flow 2nd Stage Hydrocracking	Simple 2nd Stage Hydrocracking	Fluid Catalytic Cracking	Platformed
Gasoline Sample Number	636/335-2	636/321-3	536/678	601/749-751	593/255-1,2,3,4,5	636/220[1,2,3,4,5]
Conditions of Final Treatment						
$P-P_{(base)}$, psi	0	0	-500	-500	-10	0
$LHSV/LHSV_{(base)}$	1.40	1.54	1.0	0.725-1.45	1.03-1.56	1.48
$CFR/CPR_{(base)}$	---	---	1.18	1.25	---	---
$T-T_{(base)}$, F	-87	-85	47-49	20-50	2-47	-57
Physical Properties						
API Gravity @ 60°F	42.1	43.9	51.8-53.4	48.8-51.0	43.1-45.2	35.3-36.9
Octane No.. (RON Clear)	94.5	96.0	91.5	---	95.5-96.9	97.7-99.8
Ultimate Analysis						
Hydrogen; wt %	10.91	12.01	---	---	---	10.74
Carbon; wt %	87.61	88.73	---	---	---	88.92
Sulfur; wt, ppm	0.1	0.1	11.7-32.0	---	---	---
Nitrogen; wt, ppm	0.1	0.3	0.1-1.0	---	---	---
Oxygen; wt, ppm	183	327	91.5-93.6	---	---	---
FIA Analysis, Vol %						
Aromatics	66.0	37.1	29.1-34.3	23.6-35.7	45.2-507	---
Olefins	0.0	0.0	0.0-0.0	0.0-0.0	4.2-6.2	---
Paraffins & Naphthenes	32.9	60.7	65.7-70.9	64.3-76.4	44.5-49.5	---
Distillation, Temperature °F						
IBP	158	144	82-107	30-70	120-130	156-165
10%	183	173	122-127	77-158	157-161	200-204
50%	247	255	244-232	215-242	230-245	272-277
90%	330	344	350-359	320-340	344-336	367-372
EP	411	382	385-393	365-459	410-422	425-462

TABLE E-16. COMPARISON OF COAL-DERIVED GASOLINE COMPOSITION(27)

Composition	Gasoline from Petroleum(26)	Gasoline from SRC-II Naphtha Hydrotreated(21)	Gasoline from EDS Naphtha Hydrocracked & Platformed(22)	Mild Hydrocracking Series Flow Hydrocaracking(25)	Gasoline from H-Coal Gas-Oil Heavy Hydrocracking(25) Simple Hydrocracking	Gasoline from H-Coal Naphtha Moderate Hydrotreatment Platformed(22)
	Sample No. API Standard	Sample No. 636/335-2	Sample No. 636/321-3	Sample No. 536/678-47	Sample No. 601/749-23	Sample No. 636/220-5
Paraffins, Wt %	56.8 [a,b]	23.9 [d,g]	18.8 [d,g]	38.3 [b,e]	34.4 [b,f]	18.85 [d,h]
Naphthenes, Wt %						
Monocycloparaffins - C_2-C_{13}	2.4 [c]	8.3	16.6	23.5	39.5	8.80
Dicycloparaffins	0.0	0.7	2.2	--	--	0.63
Aromatics, Wt %						
Benzene	0.12	18.0	0.8	5.9	5.1	--
Toluene	21.8	19.0	12.6	7.7	6.5	--
Alkylbenzene C_8-C_{13}	7.0	27.9	43.6	16.0	14.6	61.99
Indans/tetralins, Wt %						
C_8-C_{11}	0.22	2.1	3.4	0.0	0.0	7.72
Naphthalenes, Wt %						
C_{10}-C_{12}	0.09	0.0	0.1	0.0	0.0	2.01
Polars, Wt %						
C_6-C_9	0.00	0.0	0.0	0.0	0.0	--
Olefins, Wt %	7.9	0.0	0.0	0.0	0.0	--
Unidentified, Wt %	3.7	--	--	--	--	--

[a] Includes 21.9% C_4 X C_5 Paraffins

[b] C_4-C_{13} inclusive

[c] C_6-C_9 only

[d] Volume %

[e] Includes 31.5% C_4 X C_5 paraffins

[f] Includes 16.6% C_4 X C_5 paraffins

[g] C_6 to C_{10} indlusive

[h] C_6 + fraction only

TABLE E-17. GASOLINE COMPARISON—SPECIFICATIONS, PETROLEUM, AND COAL-DERIVED[27]

Gasoline	Sulfur Content (wt ppm)	Distillation End Point (°F)	Gravity (°API)	Aromatics (Vol %)	Olefins (Vol %)	Saturates (Vol %)
Gasoline Specifications	<1000	437	55-65	--	--	--
Petroleum-derived Gasoline	75-240	340-345	57-58.4	24-36	5-8	56-59
Coal-derived Gasolines:						
SRC-II Naphtha	0.1	411	42.1	--	--	--
EDS Naphtha	0.1	382	43.9	--	--	--
H-Coal Gas Oil Treatment 1	12-32	385-393	52-53	29-34	0	66-71
Treatment 2	--	365-459	49-51	24-36	0	64-76
Treatment 3	--	--	--	45-50	5-6	45-49

E.2.4 NO. 2 FUEL OIL FROM DIRECT LIQUEFACTION

Acceptable blending stock for No. 2 fuel oils can be produced from crude by either single-stage or two-stage hydroprocessing techniques. Results from EDS and H-coal crude are shown in Table E-18. The physical properties of synfuel blending stock were similar to those of a petroleum-derived No. 2 fuel oil. The synfuels have a low nitrogen and sulfur content; they also tend to have slightly lower API gravities and a higher flash point than required by API No. 2 fuel specifications. Distillation temperatures at 90 percent are within the acceptable specification range.

E.2.5 JET AND DIESEL FUELS FROM DIRECT LIQUEFACTION

H-coal and SRC II syncrudes were hydroprocessed in the same plant as jet fuel, diesel fuel, and No. 2 fuel oil (Table E-19). These synfuels are similar to the jet fuel and No. 10 diesel specifications shown in Table E-20. Heavier hydroprocessed products (not shown here) meet the No. 2D cold climate diesel specifications.

E.3 CHEMICAL CHARACTERIZATION OF INDIRECT LIQUIDS

The indirect coal liquefaction products characterized in this section include gasoline from Fischer-Tropsch synthesis, gasoline from the Mobil-M gasoline conversion process, and methanol. The Fischer-Tropsch synthesis unit also generates a stream of oxygenated compounds that is described in the following paragraphs. The term "indirect liquefaction" refers to the fact that coal is gasified before the liquids are produced. Some of the common gasifiers (e.g., Lurgi and Synthane) generate streams of tars, oils, and phenols, and these are also described in the following paragraphs even though they are produced in relatively minor amounts.

E.3.1 FISCHER-TROPSCH GASOLINE

Fisher-Tropsch gasoline is reported to be sulfur and nitrogen free (Reference 31). In addition, the aromatics content as shown in Table E-21 (17 percent) is lower than that of typical petroleum gasolines (24 to 33 percent), as shown in Table E-17. The saturates content is similar to that in petroleum-derived gasoline, but the olefin content of Fischer-Tropsch gasoline is much higher than that of petroleum gasoline. The absence of nitrogen and sulfur compounds means that heterocyclic compounds involving these elements will also be absent. The advantage in terms of SO_x and NO_x emissions is probably not significant because petroleum gasolines tend to be low in nitrogen and sulfur as well. The Fischer-Tropsch synthesis reactor also produces a wide variety of oxygenates. The extent to which these are present in the gasoline product is unknown.

The Reid vapor pressure for Fischer-Tropsch gasoline is estimated to be 10 (Reference 34). This is in the middle of the range of Reid vapor pressures for petroleum gasolines (7 to 15) (Reference 35). Thus, evaporative emissions from handling and storage should be similar in quantity to those from petroleum gasoline.

TABLE E-18. PROPERTIES OF NO. 2 FUEL OIL REFINED FROM PETROLEUM AND SYNCRUDE(27)

Parameter	SPECIFICATION(28)	CRUDE OIL(29)	EDS COAL(30) OIL DISTILLATE		H-COAL ATMOSPHERIC(25) STILL BOTTOMS
		50% virgin 50% cracked	first stage hydrocracking	second stage hydrocracking	second stage hydrocracking
		Sample No. API #78-4	Sample No. 3532-7	Sample No. 3532-20/26	Sample No. 3531-35/36
Gravity, °API	30	36.2	25	27.4/27.9	---
Molecular Weight	---	---	220	---	---
Pour Point, °F	20	-10	-75	---	---
Flash Point, °F	100	---	136	---	---
Viscosity, cSt, 100°F	2.0-3.6	2.6	2.37	2.28/2.06	---
Distillation Temperature, °F					
IBP	---	437.0	367.0	397/400	---
10,LV %	---	470.0	412.0	408/404	---
50,LV%	---	511.0	470.0	450/433	---
90,LV%	540-640	572.0	545.0	539/540	---
EP	---	610.0	592.0	585/583	600
Bottoms %	---	---	1.0	1.0/1.5	---
Ultimate Analysis					
Hydrogen, Wt%	---	---	12.03	23.17/12.20	23.61/12.50
Carbon, Wt %	---	---	87.80	86.93/87.93	86.69/87.33
Sulfur, Wt ppm	<5,000	2,500	2.0	84/139	20.2/7.1
Nitrogen, Wt ppm	---	---	0.6	0.6/0.2	0.2/1.9
Oxygen, Wt ppm	---	---	718.0	723/415	102/483

TABLE E-19. PHYSICAL PROPERTIES OF JET/DIESEL FUELS FROM COAL SYNCRUDE[27]

Parameter	H-Coal Syncrude		SRC II Syncrude
	Ill. #6 Coal Burning Star Mine	Wyodak Coal	Pittsburgh Seam Blacksburg, W.Va. #2 Mine, Conoco Coal
	---Single Stage Hydro Treating (several) -------		
Processing Conditions			
Catalyst Temperature °F	750	752	750
LHSV	0.5	1.0	0.5
Hydrogen partial pressure, psig	2232	2257	2306
Recycle Gas Rate, SCF/bbl	7921	7743	13752
Catalyst	1 CR-113	1 CR-113	1 CR-113
Physical Properties			
Gravity, °API	37	39.7	36.3
Flash Point, °F	108	>100	>100
Distillation Temp. End Point,°F	554	<554	<554
Viscosity @ 100°F, cSt			
Cu Corrosion	No. 1	No. 1	No. 1
Aromatics, LV %	2.3	3.6	5.0
Smoke Point, (min)	23	21	22
Freeze Point, °F	-53	<-40	-75
Thermal Stability	No. 1	---	No. 1
JFTOT @ 260	P 0	---	P 0
Existant Gum, ppm	1	1	2

[a] Physical properties of +250°F boiling range product

TABLE E-20. DETAILED SPECIFICATION FOR JET FUEL, AND DIESEL FUEL(27)

Parameters	Jet Fuel (4)	Diesel Specifications ASTM D-975-78 (33) All Climates No. 1D	Typical Climates No. 2D	Cold Climates No. 2D
Flash Point, °F (min)	>100	>100	>100	>125
Smoke Point, (min) (32)	> 20	--	--	--
Pour Point, °F (max)	--	--	--	--
Freeze Point, °F	<-40	--	--	--
Water/Sediment, Vol % (max)	--	--	--	--
Existant Gum, ppm	< 7	--	--	--
Carbon Residue on 10% Bottoms, % (max)	--	--	--	--
Thermal Stability	No. 1 or 2	--	--	--
Ash, Wt % (max)	--	<0.01	<0.01	<0.01
JFTOT @ 260°C	P<25 min	--	--	--
Distillation Temperature, °F				
10% (max)	--	--	--	--
90% (min)	--	--	--	--
" (max)	--	<550	<540-560	<560
End Point	570	--	--	--
Kinematic Viscosity, cSt				
@ 100°F (min)	--	1.3-2.4	1.9-4.1	1.7-4.1
" (max)	--	--	--	--
Aromatics, LV %	< 20	--	--	--
Gravity, °API (min)	37-51	--	--	--
Copper Strip Corrosion (max)	No. 1	No. 3	No. 3	No. 3
Sulfur, Wt % (max)	--	< 0.5	< 0.5	< 0.5
Octane No.	--	> 40	> 40	> 40

TABLE E-21. COMPARISON OF PRINCIPAL UNLEADED GASOLINE SPECIFICATIONS WITH ESTIMATED FISCHER-TROPSCH GASOLINE PROPERTIES CASE II [34]

Properties	Estimated F-T Unleaded Gasoline	Specifications
Gravity, °API	67.2	
Octane Numbers		
Research	91	
Motor	83	82 min
(Research + Motor) /2	87	87 min
Volatility		
Reid Vapor Pressure, lb	10.0	
Distillation, °F		
IBP	86	
10%	108	158 max
30%	137	
50%	186	170/250 min /max
70%	249	
90%	335	374 max
EP	420	437 max
V/L Ratio (+20), °F	@127	@140 max
Sulfur, wt %	Nil	0.10 max
Composition, vol %		
Paraffins	60	
Olefins	20	20 max (Target)
Naphthenes	3	
Aromatics	17	
Molecular Weight	93	

E.3.1.1 F-T By-Product Chemicals Composition

Approximately 5 to 12 (weight percent) of the Fischer-Tropsch synthesis product is by-product chemical oxygenates (Reference 28). Table E-22 shows the distribution of these products. At the SASOL plant the aldehydes are hydrogenated and methanol is used on-site as make-up in the Rectisol gas cleaning unit. Ethanol, propanol, butanol, pentanol, acetone, MEK, and a higher alcohol fraction are the products distributed commercially (Reference 31).

E.3.1.2 Tars, Oils, and Phenols

Depending on the type of gasifier used, by-product tars and oils from the gasification unit may be produced. Tables E-23, E-24, and E-25 present data on the composition of typical gasifier tar and oil by-products. It can be seen from these tables that coal type and source are important factors in determining the composition of the tars and oils. Table E-23 shows that di- and tri-aromatics are the primary constituents of tars from the Synthane gasifier. N-heterocyclics, phenols, and benzene are present in much smaller but significant quantities, and pentacyclic aromatics are only present in trace amounts.

Table E-25 presents the composition of an oil sample produced by a Lurgi gasifier. It is primarily composed of benzene and alkylated benzenes. Table E-25 shows the elemental composition of unseparated tars and oils also produced by a Lurgi gasifier. It can be seen that a wide range of trace and minor elements can be present.

Table E-26 shows the estimated composition of the crude phenol by-product stream from a Lurgi gasification unit. More than 70 percent of the mixture is expected to be monohydric phenols. Other organics such as benzene may also be found in the phenol stream.

TABLE E-26. ESTIMATED COMPOSITION OF PHENOL BY-PRODUCT STREAM

Phenol Class/Compound	Percent (wt)
Monohydric Phenols	74
Phenol	50
Cresols	17
Xylenols	4
Catechols	20
Resorcinols	7

TABLE E-22. BY-PRODUCT CHEMICALS PRODUCED BY FISCHER-TROPSCH SYNTHESIS [31]

NON-ACID CHEMICALS	Wt %
Acetaldahyde	3.0
Propionaldehyde	1.0
Acetone	10.6
Methanol	1.4
Butyraldehyde	0.6
Ethanol	55.6
MEK	3.0
i-Propanol	3.0
n-Propanol	12.8
2-Butanol	0.8
EEK-MPK	0.8
i-Butanol	4.2
n-Butanol	4.2
N-Butylketone	0.2
2-Pentanol	0.1
n-Pentanol	1.2
C_6^r alcohols	0.6

TABLE E-23. COMPOSITION OF BENZENE SOLUBLE TARS PRODUCED IN SYNTHANE GASIFICATION PROCESS [36]

Compound/Class	Type/Origin of Coal			
	Bituminous (Illinois)	Lignite (N. Dakota)	Subbituminous (Montana)	Bituminous (Pennsylvania)
	Volume %			
Mono Aromatics				
Benzene	2.1	4.1	3.9	1.9
Phenols	2.8	13.7	5.3	3.0
Di Aromatics				
Naphthalenes	11.6	19.0	15.3	16.5
Indans/Indenes	10.5	5.0	7.5	8.2
Naphthols and Indanols	0.9	11.4	11.1	2.7
Tri Aromatics				
Phenylnaphthalenes	9.8	3.5	6.4	7.6
Acenaphthenes	13.5	12.0	11.1	15.8
Fluorenes	9.6	7.2	9.7	10.7
Anthracenes/ Phenanthrenes	13.8	10.5	9.0	14.8
Acenaphtnols	--	2.5	4.9	2.0
Phenanthrols	2.7	--	0.9	--
Tetracyclic Aromatics				
Pericondensed (benzanthracenes, chrysene)	7.2	3.5	4.9	7.6
Catacondensed (pyrene, benz-phenanthrenes)	3.0	1.4	3.0	4.1
Pentacyclic Aromatics	trace			trace
Heterocyclics				
Dibenzofurans	6.3	5.2	5.6	4.7
Dibenzothiophenes and Benznaphthothiophenes	6.2	1.0	1.5	2.4
N-Heterocyclics	10.8	3.8	5.3	8.8

TABLE E-24. COMPOSITION OF TARS AND OILS PRODUCED BY GASIFICATION OF VARIOUS COALS IN LURGI GASIFIERS [34]

Coal Number	1		2		3		4		5		6		9	
Coal Type/Origin	Subbituminous Montana Rosebud		Bituminous Illinois #6		Bituminous Illinois #5		Bituminous Pittsburgh #8		Bituminous S. African		Lignite N Dakota		Lignite N. Dakota	
	Tar	Oil	Tar	Oil	Tar	Oil	Tar	Oil	Tar	Oil	Tar	Oil	Tar	Oil
Production Rate, kg/tonne coal (dry basis)	26	26	27	5	35	6	38	8	15	8	15	8	15	6
Elemental Composition (wt %)														
C	83.1	81.3	85.5	84.8	85.9	84.9	88.5	87.3	--	--	--	--	--	--
H	7.7	9.2	6.4	7.8	6.4	7.7	5.9	7.6	--	--	--	--	--	--
N	0.65	0.5	1.2	0 7	1.2	0 5	0.9	0.5	--	--	--	--	--	--
S	0.28	0.5	1.7	2 4	2.4	2 3	1.5	1.5	0.3	0.25	0.65	0.52	--	--
O	8.2	8.5	5.2	4.3	4.2	4.7	3.2	3.2	--	--	--	--		--
Ash	0.05	0.03	0.03	0.01	0.01	0.01	0 01	0.01	--	--	0.45	--		
Phenols	5.3	19.1	2	20.1	4.7	19.2	1	10	--	--	--			
Minor and Trace Elements (ppmw)														
Ag	--	--	--	--	--	--	--	--	-	--	--	--	<0.2	<1
As	--	--	--	--	--	--	--	--	4	26	7	24	2	1 7
B	--	--	--	--	--	--	--	--	50	0.5	1	4	20	30
Ba	--	--	--	--	--	--	--	--	--	--	2	560	15	0.5
Be	--	--	--	--	--	--	--	--	0.8	0.05	--	<0.1	0 1	0 05
Br	--	--	--	--	--	--	--	--	<.04	<.04	<0.1	<0.2	--	--
Cd	--	--	--	--	--	--	--	--	<.05	<0.3	<0.3	<0.5	<0.1	<0 1
Ce	--	--	--	--	--	--	--	--	4	<0.3	4	--	--	--
Co	--	--	--	--	--	--	--	--	--	--	0.6	0.9	0.05	0.02
Cr	--	--	--	--	--	--	--	--	--	--	5	4	1	0.6
Cs	--	--	--	--	--	--	--	--	--	--	0.2	--	--	--
Cu	--	--	--	--	--	--	--	--	--	--	3	2	0.1	2
F	--	--	--	--	--	--	--	--	4	<0.5	51	5	12	.06
Ga	--	--	--	--	--	--	--	--	--	--	0.6	--	--	--
Ge	--	--	--	--	--	--	--	--	--	--	0.1	--	--	--
Hg	--	--	--	--	--	--	--	--	0.4	<0.1	2.9	0.16	<0.1	<0 1
Li	--	--	--	--	--	--	--	--	--	--	0.7	0.1	0.5	0.5
Mo	--	--	--	--	--	--	--	--	--	--	2	6	0 02	0.02
Mn	--	--	--	--	--	--	--	--	2.5	0.3	11	0.7	--	--
Ni	--	--	--	--	--	--	--	--	2.5	1.2	3	2	10	1.5
P	--	--	--	--	--	--	--	--	--	--	90	2	--	--
Pb	--	--	--	--	--	--	--	--	50	1	14	4	1 5	0.15
Rb	--	--	--	--	--	--	--	--	--	--	2	0.2	--	--
Sb	--	--	--	--	--	--	--	--	0.8	0.5	--	--	<0 05	<0 02
Sc	--	--	--	--	--	--	--	--	--	--	0.7	2	--	--
Se	--	--	--	--	--	--	--	--	--	--	0.2	0.4	0 2	<0 01
Sn	--	--	--	--	--	--	--	--	--	--	--	--	0.2	<0 05
Sr	--	--	--	--	--	--	--	--		--	84	0 3	--	--
Te	--	--	--	--	--	--	--	--	--	--	--	--	--	--
U	--	--	--	--	--	--	--	--	--	--	0.9	--	5	<1
V	--	--	--	--	--	--	--	--	5	0.2	3	0.2	0.05	0 15
W	--	--	--	--	--	--	--	--	--	--	-	--	--	--
Y	--	--	--	--	--	--	--	--	--	--	3	1	--	--
Zn	--	--	--	--	--	--	--	--	--	--	0.9	2	6	0 4
Zr	--	--	--	--	--	--	--	--	--	--	10	1	--	--
Al	--	--	--	--	--	--	--	--	--	--	1500	150	--	--
Ca	--	--	--	--	--	--	--	--	--	--	2600	230	--	--
Fe	--	--	--	--	--	--	--	--	--	--	1500	100	--	--
K	--	--	--	--	--	--	--	--	--	--	178	35	--	--
Na	--	--	--	--	--	--	--	--	--	--	700	390	--	--
Si	--	--	--	--	--	--	--	--	--	--	4200	180	--	--
Ti	-	-	--	--	--	--	--	--	--	--	92	5	--	--
Mg	--	--	--	--	--	--	--	--	--	--	764	19	--	--

TABLE E-25. ORGANIC COMPOSITION OF LURGI OIL PRODUCED AT THE WESTFIELD LURGI FACILITY [38]

Compound/Class	Concentration (wt %)
Paraffins	10.71
Olefins	--
Aromatics	89.3
Sulfur (total)	--
Benzene	19.56
Toluene	28.40
Xylene and ethyl benzene	14.7
Ethyl toluene	2.69
Trimethyl Benzenes	11.8
Styrene	1.07
Indane	1.43
1,2-benzofuran	1.09
Indene	5.37
Naphthalene	1.40
Thiophenes	1.77

E.3.2 MOBIL-M GASOLINE

Mobil-M gasoline is also reported to be free of detectable quantities of nitrogen and sulfur as well as oxygen (Reference 40). The content of paraffins, olefins, naphthenes, and aromatics is typical of that of petroleum gasolines (Table E-27). The Reid vapor pressure is also similar to that of petroleum gasoline. With Mobil's standard additive package, the gasoline has passed quality screening tests for carburetor detergency, emulsion formation, filterability, copper attack, metal corrosion, and storage stability (Reference 40).

Durene (sym-1, 2, 4, 5-tetramethyl benzene) is a potentially troublesome component because of its 175°F freezing temperature. Carburetor plugging can be a problem if durene concentrations exceed 4 percent. Mobil believes that manipulating of process conditions and blending with conventional gasolines can keep durene concentrations to acceptable levels (Reference 41).

Based on the Reid vapor pressure, the evaporative emissions from Mobil-M gasoline should be similar in quantity to the emissions from petroleum gasolines. The absence of nitrogen, sulfur, and oxygen indicates that the product will be free of heterocyclic compounds as well. As with the Fischer-Tropsch gasoline, the absence of nitrogen and sulfur is probably not a significant advantage over petroleum gasoline for NO_x and SO_x emissions.

E.3.3 METHANOL

Methanol (CH_3OH) is a light volatile alcohol. The estimated composition of a typical crude methanol is shown in Table E-28. The concentrations of the impurities are expected to vary depending on the synthesis process used. Crude methanol can be upgraded to meet user needs. Chemical grade methanol is relatively pure, containing 0.05 percent water. Technical or fuel-grade methanol, however, will probably contain impurities such as those listed in Table E-28. Distribution systems may introduce additional water (Reference 42).

Methanol may also be used as a motor fuel by blending it with gasoline. Problems with corrosion, phase separation with water, and vapor lock have been reported (Reference 48). In hot regions of the country, large, non-ideal increases in the vapor pressure of the blend may require that some of the lower molecular weight fractions of the gasoline be removed during summer months (Reference 42).

TABLE E-27. TYPICAL PROPERTIES OF FINISHED MOBIL GASOLINE[43]

COMPONENTS, WT%	
BUTANES	3.2
ALKYLATE	28.6
C_5^+ GASOLINE	68.2
	100.0

COMPOSITION, WT%	
PARAFFINS	56
OLEFINS	7
NAPHTHENES	4
AROMATICS	33
	100

OCTANE	RESEARCH	MOTOR
CLEAR	96.8	87.4
LEADED (3 CC TEL/US GAL)	102.6	95.8
REID VAPOR PRESSURE, PSI	9.0	
SPECIFIC GRAVITY	0.730	
SULFUR, WT%	NIL	
NITROGEN, WT%	NIL	
DURENE, WT%	3.8	
CORROSION, COPPER STRIP	1A	

ASTM DISTILLATION, ^oF	
10%	117
30%	159
50%	217
90%	337

TABLE E-28. ESTIMATED CRUDE METHANOL COMPOSITION[44]

CH_3OH	94.6%
C_2H_5OH	
C_3H_7OH	2800 ppm
C_4H_9OH	
$(CH_3)_2CHCH_2OH$	150 ppm
Non-methane HC's	600 ppm
H_2O	5.0%

E.4 CHEMICAL CHARACTERIZATION OF COAL GASES

E.4.1 SNG

The primary constituent of SNG is methane, but smaller quantities of H_2, CO_2, CO, N_2, AR, H_2S, and C_2H_6 can also be present. Table E-29 shows a typical high-Btu product-gas composition. There is evidence that trace quantities of metal carbonyls may be produced during catalytic methanation, during gasification, or by reaction of CO and Ni or Fe in piping and other structural components (Reference 45).

TABLE E-29 TYPICAL SNG COMPOSITION (DRY)[46]

Concentration	Concentration (vol %)
Carbon dioxide	0.50
Carbon monoxide	0.06
Hydrogen	1.45
Methane	96.84
Nitrogen and argon	1.15
Hydrogen sulfide	0.2 ppm

E.4.2 CHEMICAL CHARACTERIZATION OF LOW-/MEDIUM-BTU COAL GAS

The composition of low- and medium-Btu gas is highly variable and depends on such factors as coal type, gasifier type, gasifier operating conditions, and the extent of gas cleaning. It can be expected that gases will be cleaned to meet user needs. If the bases are to be combusted, it can also be expected that they will be sufficiently cleaned to satisfy federal and local air quality regulations.

Table E-30 shows the gaseous species in a typical low Btu gas. Samples were taken over a week-long period from a Wellman-Galusha gasification facility using lignite coal. The values in the table represent an average of the available data taken during the sampling period, thus the calculated confidence intervals include not only sampling and analytical variance but also a major contribution from process variability (Reference 47).

Table E-31 shows that a wide range of trace and minor elements may also be present in the product gas. In addition to the C1-C6 hydrocarbons shown in Table E-30, a product gas may contain a number of more complex

organics. Table E-32 lists some that are of particular environmental concern. In the product gas characterized in Tables E-30, E-31, and E-32, the combined polynuclear aromatics concentration was more than 3500 ug/SCM (Reference 47).

TABLE E-30. GASEOUS SPECIES ANALYSIS SUMMARY: LOW-BTU COAL GAS [47]

Analysis	Product Gas
Major Components (% ± 2σ)	
CO_2	9.5 ± 1.8
H_2	15.4 ± 2.4
O_2 + Ar	0.7 ± 0.4
N_2	46.8 ± 4.1
CO	26.3 ± 4.6
CH_4	1.3 ± 0.3
Sulfur Species (Vppm ± 2σ)	
H_2S	1110 ± 130
COS	143 ± 16
SO_2	16 ± 50
CS_2	12 ± 4
Total volatile sulfur	990
C_1–C_6 Hydrocarbons (Vppm ± 2σ)	
CH_4	9590 ± 1510
C_2H_6	643 ± 132
C_2H_4	314 ± 68
C_3 + isomers	445 ± 68
C_4 + isomers	193 ± 42
C_5 + isomers	202 ± 392
C_6 + isomers	197 ± 100
Nitrogen Species (Vppm ± 2σ)	
NH_3	842 ± 943
HCN	200 ± 90
Metal Carbonyls (Vppm)	NR
$Fe(CO)_5$	
$Ni(CO)_4$	

NR Not Reported

TABLE E-31. TRACE AND MINOR ELEMENT COMPOSITIONS OF LOW BTU PRODUCT GAS [47]

Element	PRODUCT GAS		
	Particulate µg/SCM	Vapor µg/SCM	Total µg/SCM
Aluminum	27,000	0.42	27,000
Antimony	<380	<16	<400
Arsenic	370	>18	>390
Barium	7,600	21	7,600
Beryllium	2.6		2.6
Bismuth	2.6		2.6
Boron	550	>13	>560
Bromine	130	0.88	130
Cadmium	270		270
Calcium	150,000	460	150,000
Cerium	51	0.88	53
Cesium	2.3		2.3
Chlorine	>3,200	16	>3,200
Chromium	88	15	100
Cobalt	14	>0.8	>15
Copper	270	11	280
Dysprosium	1.7		1.7
Erbium	0.64		0.64
Europium	0.97		0.97
Fluorine	1,300	9.2	1,300
Gadolinium	1.9		1.9
Gallium	23	13	36
Germanium	7.2		7.2
Gold			
Hafnium	2.9		2.9
Holmium	0.97		0.97
Iodine	<4		<4
Iridium			
Iron	<33,000	460	<33,000

(continued)

TABLE E-31 (CONTINUED)

Element	Product Gas Particulate µg/SCM	Product Gas Vapor µg/SCM	Total µg/SCM
Lanthanum	36	1.3	37
Lead	130	29	160
Lithium	120	6.3	130
Magnesium	39,000	25	39,000
Manganese	120	7.1	130
Mercury	6,500	3.3	6,500
Molybdenum	9.7		9.7
Neodymium	9.7		9.7
Nickel	110	9.6	120
Niobium	13		13
Phosphorus	>3,200	94	>3,300
Platinum			
Potassium	>3,200	69	>3,300
Praseodymium	6.4		6.4
Rhenium	<0.3		<0.3
Rubidium	<7	2.0	<9
Samarium	6.4		6.4
Scandium	19		19
Selenium	15,000	>3	15,000
Silicon	>6,700	330	>7,000
Silver	110	30	140
Sodium	21,000	31	21,000
Strontium	3,900	4.2	3,900
Sulfur	>3,500	860	>4,300

TABLE E-32. ORGANIC COMPOUNDS IDENTIFIED FROM THE PRODUCT GAS BY SIM GC/MS (47)

Compound Identified	Concentration[a] µg/SCM	Sample LC Fraction
Polychlorinated biphenyls[c]	≤15.0	PGP-2; PGC-2
Benzo(a)anthracene	1.8E3[b]	PGP-2,3; PGC-2,3
Benzo(b)fluoranthene	3.8E2[b]	PGP-2,3; PGC-3
Biphenyl	5.1E3	PGP-3; PGC-3
7,12-Dimethylbenzo(a)anthracene	1.6E2[b]	PGP-3
Benzo(c)phenanthrene	1.0E3[b]	PGP-3; PGC-3
Benzo(a)pyrene	1.9E2	PGP-3
3-Methyl chloranthrene	4.7	PGP-3
Dibenzo(a,h)anthracene	6.1	PGP-3
Dinitrotoluenes	2.2E3	PGP-4
Dinitrocresol	1.8E3	PGP-5; PGC-5
Dihydroacridine[d]	1.1E2	PGP-5,6

SCM at 25°C (77°F) and 101 kPa (1 atm), dry basis
PGP = product gas particulate
PGC = product gas organic module composite

[a] aEb = a x 10^b

[b] includes possible coeluting isomers

[c] based on PCG-3 Cl

[d] standard unavailable, based on dihydrophenanthridine

REFERENCES

1. Wasilk, N.J. and E.T. Robinson. "The Commercial Scale Refining of Parahoe Crude Shale Oil Into Military Specification Oils," ACS National Mutiny, Division of Fuel Chemistry: Las Vegas, August, 1980.

2. Union Oil Company of California. Comprehensive Analyses of Shale Oil Products (Revised). API, September 1978.

3. Stauffer, H.C. and S.J. Yanik. "Shale Oil: An Acceptable Refinery Syncrude." Proceedings of the National ACS. Miami Beach, September, 1978.

4. Aalund, L. "Guide to World Crudes 1," Oil & Gas. 74(13), 87-122, 1976.

5. Aalund, L. "Guide to World Crudes 2," Oil & Gas. 74(15), 72-78, 1976.

6. Considine, D. M. Energy Technology Handbook. New York: McGraw-Hill, 1977.

7. TRW, Inc. and Denver Research Institute, EPA 908/4-78-003, May 1977.

8. Union Oil Company of California. Comprehensive Analyses of Shale Oil Products: Second Study. American Petroleum Institute, Washington, D.C. 1979.

9. Applied Systems Corporation. Compilation of Oil Shale Test Results, ONR Contract Number N00014-76-C-0427, April, 1976.

10. American Petroleum Institute. Validation of Neutron Activation Technique for Trace Element Determination in Petroleum Products. API Publication No. 4188 prepared by Gulf Radiation Technology, San Diego, August 1973.

11. Carter, W. A., H. J. Buening, and S. C. Hunter. Emission Reduction on Two Industrial Boilers with Major Combustion Modifications. EPA-600/7-78-099a, June 1978.

12. von Lehmden, D.J., R.H. Jungers, and R.E. Lee. "Determination of Trace Elements in Coal, Fly Ash, Fuel Oil and Gasoline. A Preliminary Comparison of Selected Analytical Techniques," Analytical Chemistry, 46:239, February 1974.

13. Vitez, B. "Trace Elements in Flue Gases and Air Quality Criteria," Power Engineering, pp 56-60, January 1976.

14. McKay, J.F. and D.R. Latham. "High-Performance Liquid Chromatography Separation of Olefin, Saturated, and Aromatic Hydrocarbons in High-Boiling Distillates Residues of Shale Oil," Proceedings of the National ACS, Houston, March 1980.

15. Lovell, P.F. and W.H. Seitzer. "Some Flow Characteristics of Utah Shale Oils." Proceedings of the 12th Oil Shale Symposium. Golden, Colorado: Colorado School of Mines, 1979.

16. Nelson, W.L. Petroleum Refinery Engineering 4th Edition New York: McGraw-Hill, 1968.

17. Robinson, E.T. Refining of Paraho Shale Oil into Miltary Specification Fuels. Proceedings of the 12th Oil Shale Symposium. Golden, Colorado: Colorado School of Mines, 1979.

18. Sullivan, R.F. Refining and Upgrading Synfuel from Coal and Oil Shales by Advanced Catalytic Processes. Chevron Research Company Quarterly Report January March 1979 for FE-2315-37.

19. Sullivan, R.F., B.E. Stangeland and H.A. Frumkin. "Refining the Products from the SRC Coal Liquefaction Process," Proceedings of the American Petroleum Institute Refining Department, 1979.

20. Sullivan, R. F., D. J. O'Rear, and B. E. Stangeland. "Catalytic Hydroprocessing of SRC II and H-Coal Syncrudes for BTX Feedstocks," Symposium on Alternate Feedstocks for Petrochemicals. American Chemical Society, San Francisco, August 24-29, 1980.

21. Riedl, F. J. and A.J. de Rosset. "Hydrotreating and Reforming SRC-II Process Derived Naphths." Upgrading of Coal Liquids, Interim Report, UOP, Inc., FE-2566-27, June 1979a.

22. Gim, Tan and A.J. de Rosset. "Hydrotreating and Reforming Exxon Doner Solvent (EDS) Process Derived Naphthas," Upgrading of Coal Liquids, Interim Report, UOP. Inc. FE-2566-25, February 1979.

23. Gim, Tan and A.J. de Rosset. "Hydrotreating and Refining H-coal Process Derived Naphthas." Upgrading of Coal Liquids, Interim Report. FE-2566-12, March 1978a.

24. Gim, Tan and A.J. de Rosset. "Hydrotreating and Fluid Catelytic Cracking of H-Coal Process Derived Gas Oils." Upgrading of Coal Liquids, Interim Report, UOP, Inc. FE-2566-20, August 1978b.

25. Gim, Tan and A.J. de Rosset. "Hydrocracking of H-coal Process Derived Gas Oils," Upgrading of Coal Liquids, Interim Report. FE-2566-23, November 1978c.

26. Saunders, W.N. and J.B. Maynard. "Capillary Gas Chromatographic Method for Determining the C_3 - C_{12} Hydrocarbons in Full-Range Motor Gasolines," Analytical Chemisty 40(3): 529 (1968).

27. Enviro Control, Inc. "Relative Health Effects of Gasoline and Heating Fuel Derived from Petroleum or Synthetic Crudes (Draft)," Prepared for the U.S. Department of Energy under Contract No. DE-AC01-79PE-70021, May, 1980.

28. American Society for Testing and Materials. ASTM Method 0-86, Philadelphia, PA.

29. Hazelton Laboratories America, Inc. "24-Month Inhalation Toxicity Study of Raw and Spent Shale Dusts in Rats and Monkeys," Final Report. API, March, 1980.

30. Riedl, F.J. and A.J. de Rosset. "Hydrocracking of EDS Process Derived Gas Oils," Upgrading of Coal Liquids, Interim Report. UOP, Inc., FE-2566-33, November 1979c.

31. Hoogendorn, J.C. "Experience With Fischer-Tropsch Synthesis at SASOL." Presented at Institute for Gas Technology, Chicago, Illinois 1973.

32. American Society for Testing and Materials. ASTM Method 0-396-75. Philadelphia, PA.

33. O'Rear, D.J., R.F. Sullivan, and B.E. Stangeland. "Catalytic Upgrading of H-Coal Syncrudes." Proceedings of the National ACS, Houston, Texas, March 1980.

34. Schreiner, Max. "Research Guidance Studies to Assess Gasoline from Coal By Methanol-to-Gasoline and SASOL-Type Fischer-Tropsch Technologies." Prepared by Mobil Research and Development Corporation for the U.S. Department of Energy, FE 2447-13, August 1978.

35. Shelton E. "Motor Gasolines Winter 1978-79." Bartlesville Energy Technology Center, U.S. Department of Energy, BETC/PPS-79/3 July 1979.

36. Forney, A.J., W.P. Haynes, et al. "Analyses of Tars, Chars and Water Found in Effluents from the Synthane Process." Pittsburgh Energy Research Center, Pittsburgh, PA. Technical Progress Report 76, January 1974.

37. Ghassemi, M., K. Crawford and S. Quivlivan. "Environmental Assessment Report: Lurgi Coal Gasification Systems for SNG." Prepared by TRW Inc. for U.S. EPA Industrial Environmental Research Laboratory, Research Triangle Park, N.C., EPA-600/7-79-120, May 1979.

38. Westfield Development Center. Data provided to EPA's Industrial Environmental Research Laboratory, Research Triangle Park, No. Carolina, Novemver 1974.

39. South Africa Coal Oil and Gas Corp., Ltd. Table based on data provided to EPA's Industrial Environmental Research Laboratory, Research Triangle Park, November 1974.

40. Liederman, D. et al. "Mobil Methanol-To-Gasoline Process," Proceedings of the 15th Intersociety Energy Conversion Engineering Conference. Seattle, Washington, August 18-22, 1980.

41. "Mobil Proves Gasoline-From-Methanol Process," Chemical and Engineeirng News. January 30, 1978.

42. Timourian, H. and F. Milanovich. "Methanol as a Transportation Fuel: Assessment of Environmental and Health Research." UCRL 52697, Lawrence Livermore Laboratory, Livermore, California, 1979.

43. Kuo, James, C.W. and M. Schreiner. "Status of the Mobil Process for Converting Methanol to High Quality Gasoline." Proceedings of Fifth Annual International Conference on Commercialization of Coal Gasification, Liquefaction and Conversion to Electricity. University of Pittsburgh, PA., August 1-3, 1979.

44. Badger Plants, Inc. "Conceptual Design of a Coal-to-Methanol-to-Gasoline Commercial Plant." Second Interim Final Report for the Period August 31, 1977 March 1, 1979. Volume I, FE-2416-43, March 1979.

45. C.F. Braun and Company. "Carbonyl Formation in Coal Gasification Plants." Prepared for the U.S. Energy Research and Development Administration and the American Gas Association, FE-2240-16, December, 1974.

46. U.S. Bureau of Reclanation. "Final EIS: Proposed Western Gasification Company (WESCO) Coal Gasification and Expansion of Navajo Mine by Utah International, Inc., U.S. Department of Interior, 1976.

47. Kilpatrick, M.P. et al. "Environmental Assessment: Source Test and Evaluation Report; Wellman-Galusha (Ft. Snelling) Low-Btu Gasification." EPA-600/7-80-097, U.S. Environmental Protection Agency, Washington, D.C., May 1980.

48. Wigg, E.E. "Methanol as a Gasoline Extender: A Critique." Science 186 (4166): 785, 1974.

APPENDIX F

COMBUSTION PRODUCTS AND USE PROPERTIES OF SYNTHETIC FUELS

TABLE OF CONTENTS

		Page
F.1	COMBUSTION OF SHALE OIL PRODUCTS	F-3
F.1.1	Crude Shale Oil	F-3
F.1.2	Gasoline From Shale Oil	F-9
F.1.3	Shale Oil Jet Fuels	F-9
F.1.4	Diesel Fuel Marine	F-9
F.2	DIRECT LIQUEFACTION PRODUCTS USE/COMBUSTION TESTING . . .	F-10
F.2.1	SRC II Fuel Oil Testing	F-10
F.2.2	H-Coal Distillate Combustion Tests	F-20
F.2.3	Combustion/Handling Properties of EDS Coal Liquids	F-23
F.3	CHEMICAL CHARACTERIZATION OF INDIRECT COAL LIQUIDS COMBUSTION PRODUCTS	F-28
F.4	CHEMICAL CHARACTERIZATION OF LOW-/MEDIUM-BTU COAL GAS COMBUSTION PRODUCTS	F-28

TABLES

Number		Page
F-1	PROPERITIES OF PARAHO CRUDE VS. LOW SULFUR OIL . .	F-3
F-2	EXCESS NO_x FROM SHALE OIL COMBUSTION TESTS COMPARED TO BASELINE LOW SULFUR OIL.	F-4
F-3	PNA EMISSIONS SHALE OIL TESTS.	F-8
F-4	SRC II FUEL OIL COMBUSTION RESEARCH PROJECT EQUIPMENT, CONDITIONS, AND EMISSION RESULTS. . . .	F-11
F-5	PHYSICAL HANDLING PROPERTIES OF SRC FUEL OIL VERSUS PETROLEUM DISTILLATES	F-13
F-6	NO_x VALUES FOR SRC II, NO. 2 AND NO. 5 FUEL OIL UNDER VARIOUS CONDITIONS (ppm)	F-15
F-7	ASH ANALYSES-SRC FUEL OIL AND NO. 5 FUEL OIL . . .	F-16
F-8	AVERAGE FUEL PROPERTIES.	F-18
F-9	COMPARISON OF SHALE OIL, SRC II, AND TYPICAL PETROLEUM FUELS AND COMBUSTION EMISSIONS (μg/m). .	F-21
F-10	EDS FUEL OIL COMBUSTION TEST PARTICULATE AND NO_x EMISSIONS.	F-25
F-11	PROPERTIES OF EDS FUEL OILS.	F-27
F-12	GASEOUS SPECIES ANALYSIS SUMMARY: LOW-BTU TEST BURNER FLUE GAS	F-29
F-13	TRACE AND MINOR ELEMENT COMPOSITIONS OF LOW-BTU TEST BURNER FLUE GAS.	F-30

FIGURES

Number		Page
F-1	MASS EMISSION RESULTS.	F-5
F-2	PARTICLE SIZE DISTRIBUTION	F-6
F-3	PARTICULATE EMISSIONS SUMMARY.	F-19
F-4	RELATIVE NO_x VALUES AS A FUNCTION OF THE FUEL-BOUND NITROGEN CONTENT OF THE H-COAL FUELS	F-22

F.1 COMBUSTION OF SHALE OIL PRODUCTS

A large amount of work has been and is being conducted by the DOD on the combustion properties of shale oil derived products. Most of the work reported to date is based on the tests of a 10,000 barrel sample of shale oil that was produced at Anvil Points, Colorado by the Paraho process. It was refined into synthetic gasoline, JP-4, JP-5, diesel fuel marine (DFM), and heavy fuel oil at the Gary Western refinery. In addition to the DOD efforts, Southern California Edison Company (SCE) studied the handling and combustion of a separate lot of Paraho crude shale oil for EPRI. The main test results of these projects are presented, by product, in the following sections.

F.1.1 CRUDE SHALE OIL

The composition of the crude Paraho shale oil used during a series of combustion tests (Reference 1) at the SCE Highgrove Generating Station is compared in Table F-1 to the low sulfur oil normally burned.

TABLE F-1. PROPERTIES OF PARAHO CRUDE VS. LOW SULFUR OIL

Elemental Analysis (wt %)	Paraho Oil Shale	Low Sulfur Oil
C	86.05	86.38
H	11.48	12.49
N	1.98	0.22
S	0.68	0.27
O	1.81	0.64
Ash Content	0.222	0.009
API Gravity @ 60°F	20.3	24.6
Heating Value		
HHV	18,195	19,235
LHV	17,145	18,100

The Highgrove Unit 4 is a balanced draft 45 MW Combustion Engineering boiler. Mass loading, NO_x, and particle measurements were taken during both the baseline and low NO_x mode runs.

The shale oil NO_x levels were consistently higher than the low sulfur oil NO_x levels. Because of California air quality standards, only 50 percent of the fuel feed or 50 percent of the burners were fueled by the shale oil. The calculated excess NO_x added by the shale oil is given in Table F-2. The increase in NO_x is attributed to the higher N content of the shale oil, and would be above current federal standards. The

combustion modification tests conducted by SCE did show promise of reducing the shale oil NO_x emissions. Further tests are necessary to optimize those procedures.

TABLE F-2. EXCESS NO_x[a] FROM SHALE OIL COMBUSTION TESTS COMPARED TO BASELINE LOW SULFUR OIL

% Shale Oil Combusted (Approx)	Normal Firing ppm		Off Stoichiometric Firing, ppm	
10	+93[b]	(+166)[c]	+72[b]	(+94)[c]
20	+134	(+282)	+99	(+141)
30	+170	(+368)	+138	(+178)
40	+206	(+446)	+186	(+206)
50	+224	(+548)	+209	(+225)
Baseline emission for low sulfur oil	216	(248)	222	(225)

a. Corrected to 3% O_2

b. Low NO_x burner

c. Peabody burner

The mass emission results from the SCE tests are displayed in Figure F-1. The mass emissions during the shale oil tests were much higher than with the low sulfur oil. It was postulated (Reference 1) that as the individual fuel droplets burned, surrounded by their own diffusion flame, fuel cracking occurred in the liquid phase within the drop. The cracking proceeded at a rate proportional to fuel boiling temperature, producing initially heavy fuel residue. The residue in turn increases theoverall boiling temperature of the fuel blends within the drop, allowing fuel cracking to proceed at a faster rate. Further cracking finally produces carbonaceous and char-like particulates, which are left after droplet combustion is completed.

This mechanism would also explain why most of the particles emitted were larger than 10 μm. Figure F-2 displays the particle size measurement results from the SCE lists and compares them to a typical oil fired (Reference 2) result. The production of large particles during oil firing is not the normal case, as estimates of particle size distributions from oil fired boilers range from 58 weight percent below 3 μm (Reference 3) to

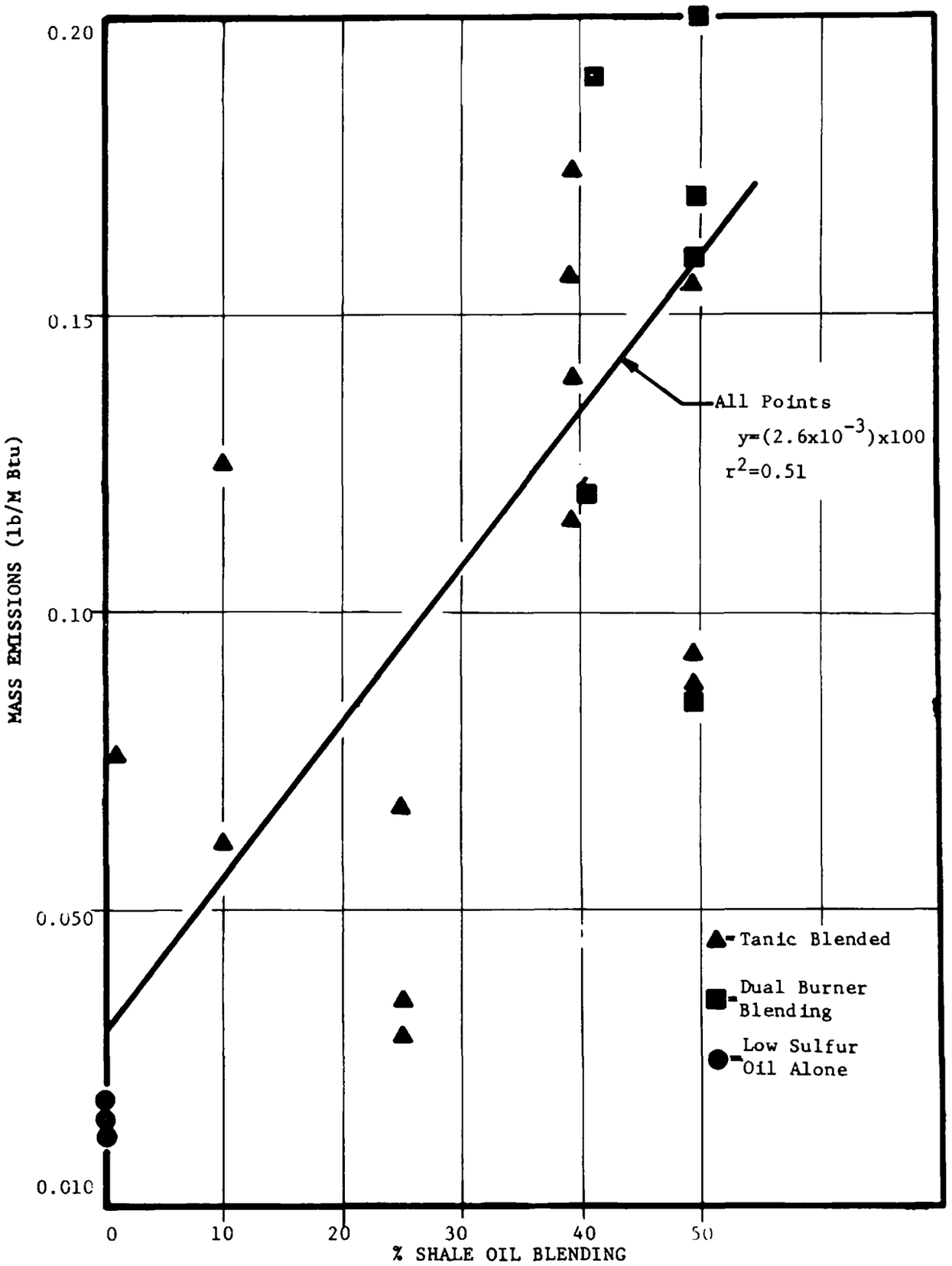

Figure F-1. Mass Emission Results

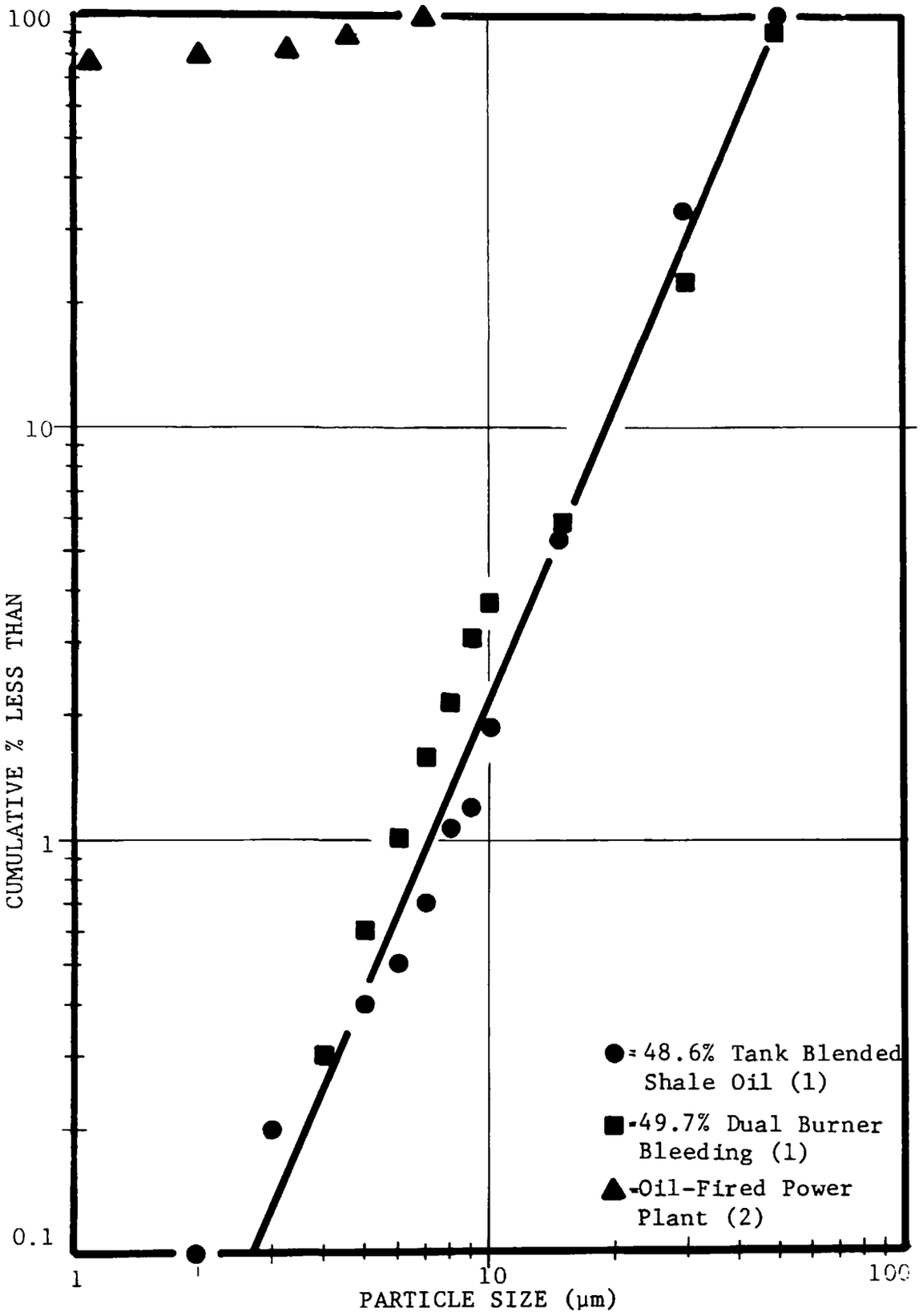

1. SCE/EPRI
2. Bennet

Figure F-2. Particle Size Distribution

90 weight percent below 7 m (Reference 4). The larger particles produced by the shale oil would pose no removal problem and, in fact, could be less of a health problem because of less penetration into the respiratory tract.

Data on the trace element emissions from the boiler were not given, but the trace element composition of the shale oil burned was measured. Comparing it to the data in Table E-3 in Appendix E, only arsenic, boron, manganese, and mercury appear in higher concentration than in residual or crude oils. Of the group, only arsenic was present in significantly higher amounts (9.4 ppm vs. 0.17 ppm for crudes).

The final parameter studied was the polynuclear aromatic (PNA) emissions from the boiler during the burning of an approximate 50/50 shale oil/low sulfur oil mixture (Table F-3). Comparing the total amount of PNA's found at five other petroleum oil burning plants, the 0.92 $\mu g/m^3$ from the shale oil tests was at the low end of the concentration range (0.1 to 2.3 µg/m3). During the SCE tests, only the filter was analyzed, and no mention was made of using XAD-2 or other absorbents to quantitively collect PNA's that might be present in the vapor phase. Depending on stack temperature and sampling conditions, the actual PNA value could be higher.

As result of this study it can be concluded that:

- No significant fuel handling, fuel mixing, combustion instability, smoke formation, or boiler operational problems occurred during the burning of shale oil.
- NO_x emissions, on the average, were 90 to 500 ppm higher during normal burning and 70 to 225 ppm higher during off-stoichiometric burning.
- Conventional off-stoichiometric combustion techniques reduced NO_x emissions.
- Particulate emissions were greater than those produced during oil firing.
- The particle size distribution showed that 90 percent of the particles were larger than 20 µm.

A study (Reference 5) of the combustion characteristics of whole, de-ashed and desulfurized Paraho shale oil was conducted on a subscale gas turbine-like combustor. The nitrogen content ranged from 0.33 to 1.63 percent for the desulfurized sample. The excess NO_x values were 60 to 180 ppm higher than the No. 2 fuel oil baseline data over the range of fuel-bound nitrogen and the exhaust temperatures studied. Smoke values were slightly above the values for No. 2 distillates over most of the range of exhaust temperatures tested.

TABLE F-3. PNA EMISSIONS - SHALLE OIL TESTS

Compound	AVERAGE CONCENTRATION ($\mu g/m^3$)			
	Shale Oil/ Crude Oil Utility Boiler (1)a	Oil-Fired Utility Boiler(2)d	Oil-Fired Utility Boiler(3)c	Oil-Fired Utility Boiler(4)d
Naphthalene	--	5	-	-
Phenanthridine	--	0.3	-	-
Dibenzothiophene	--	0.6	-	-
Anthracene/Phenathrene	--	0.6	0.008-2.13	0.024
Fluoranthene	--	1	0.007-0.098	0.009
Pyrene	--	1	0.006-0.051	0.0004
Chrysene/benz(a)anthracene	0.42(b)	0.1	-	0.00019
Benzopyrene and perylenes	--	0.04	-	-
Benzo(a)pyrene	0.15	-	-	0.032
Benzo(e)pyrene	0.12	-	-	0.032
Benzo(g,h,i) Perylene	0.23	-	-	-
Benzo Fluoranthenes	-	-	-	0.00005
Methyl Anthracene	-	-	<0.1-0.21	-
Total	0.92	9.24	0.021-2.28	0.10

a) 49.3% shale oil, 50.7% low sulfur crude
b) Benz(a)anthracene
c) Range from 3 plants, filter sample
d) XAD-2 resin sample

These subscale tests were followed by full scale tests (Reference 8) with the same Westinghouse combustor used in their 35- and 90-MW engines. Whole Paraho shale oil was burned and the results for NO_x and smoke were compared to No.2 petroleum distillate. The NO_x levels for the shale oil (nitrogen 0.33 percent) were 10 to 20 ppm higher, with the lowest NO_x level reached at the highest ($2000^{o}F$) exhaust temperatures. The shale oil produced the highest smoke levels of the synfuels tested (H-Coal and SRC II blend). Overall, it was concluded that the shale oil produced no significant differences in combustion characteristics compared to petroleum diesel fuels.

F.1.2 GASOLINE FROM SHALE OIL

The Army Fuels and Lubricants Research Laboratory (AFLRL) has performed limited tests with shale oil gasoline. The gasoline produced from the Gary Western run failed the existent gum test (4 mg/100 ml versus 2mg/100 ml allowed), and early tests with an off-specification gasoline produced severe exhaust valve erosion/corrosion. When the engine cycling tests were repeated with a new lot of the shale oil gasoline, no problems were encountered and no abnormal wear was found. No data on emissions were presented.

F.1.3 SHALE OIL JET FUELS

Neither the JP-4 nor JP-5 fuels met the military specifications for contamination or gum content. Both of these parameters can be controlled at the refinery and will not be a problem in commercial products. Both clay treatment and secondary hydrotreatment produced fuels of much higher quality.

Combustion tests of JP-4 showed that it behaved the same as petroleum-based JP-4 with the exception of NO_x emissions. JP-5 exhibited similar problems with NO_x (+15 to 20 ppm) and had a smoke number 12 times higher than petroleum JP-5. This increase in the smoke number was attributed to the higher aromatic content of the fuel. A flight test using JP-4 in a T-39 was conducted. Performance was rated normal and no in-flight problems were encountered.

F.1.4 DIESEL FUEL MARINE (DFM)

The shale oil DFM tested did not meet the military specifications for viscosity, pour point, or acid number. Tests using a corrosimeter showed no measured corrosion for aluminum or 70/30 copper/nickel alloy, and very little for 90/10 copper/nickel (0.1 mil/yr), moderate corrosion of copper (0.8 mil/yr) and mild steel (1.2 mil/yr), and relatively severe corrosion of zinc (9.8 mil/yr). These levels were deemed acceptable and it was expected that there would be no compatibility problems in ship fuel systems.

Tests with typical diesel engines showed that combustion efficiency, CO, and THC were the same as for petroleum DFM. The exhaust smoke was high

and the NO_x values ranged from 20 to 60 ppm higher than in petroleum DFM tests.

F.2 DIRECT LIQUEFACTION PRODUCTS USE/COMBUSTION TESTING

Most combustion testing of direct liquefaction products has been done on the SRC II liquids. As Table F-4 (ORNL) shows, a variety of systems have been used to evaluate their combustion properties. Only limited studies on H-Coal (Reference 9) and EDS (Reference 10) liquids have been completed. All the SRC II studies have been done on fuel-oil-type liquids. Generally this implies that some ratio of middle to heavy distillates was used in the test program. The ratio of middle to heavy distillates ranged from 2:1 to 5.75:1 in the programs to date.

F.2.1 SRC II FUEL OIL TESTING

In one of the early tests (Reference 11), the factors affecting NO_x production during the burning of SRC II fuel oil (4:1 MD to HD) were studied. This work concluded that fuel surface tension, viscosity and vaporization characteristics were important in determining the conversion level of fuel-bound nitrogen to NO_x. It was assumed that the proportions in which the medium and heavy distillates of SRC II were blended may have had a significant effect on the NO_x levels. While high proportions of the heavy distillates would be desirable to provide delayed evaporation and pyrolysis for the production of NO_x-reducing radicals, such a high concentration could lead to excessively high O_2 levels which may adversely affect NO_x emission. On the other hand, larger proportions of SRC II medium distillate may be tolerated and may result in an optimum NO_x reduction and low excess O_2 operation if mixing intensity and local fuel stoichiometry within the burner flame controlled by appropriate burner design. The SRC II blend proportions that are effective for NO_x control in the normal firing mode may not be effective in the off-stoichiometry mode. Also, blend proportions for maximum NO_x reduction may vary from boiler to boiler, depending on burner design and furnace firing arrangement. It was concluded that effective NO_x control can be achieved by designing special burner hardware that would delay mixing and would control the local fuel stoichimetry within the fuel.

In another test (Reference 5) of the handling and combustion properties of SRC II, a middle distillate, a heavy distillate, a middle/heavy blend, a 3:1 No. 2 distillate-to-SRC II blend, and a 1:1 No.2 distillate-to-SRC II blend were evaluated on a subscale gas-turbine-like combustor. In general, all the fuels burned well, and there were no significant handling problems. It was found that the percent emissions of fuel-bound nitrogen (FBN) decreased as FBN increased and as outlet temperature increased. The maximum excess NO_x levels (SRC II heavy distillate) ranged from 20 to 130 ppm above the baseline values of 30 to 130 ppm. Smoke levels increased with decreasing hydrogen content and increasing aromaticity of the fuels.

TABLE F-4. SRC II FUEL OIL COMBUSTION RESEARCH PROJECT--EQUIPMENT, CONDITIONS, AND EMISSION RESULTS (12)

Author	Fuel (MD/HD)[a]	Equipment boiler or furnace	Flame configuration for emissions suppression	Firing rate (10^6 Btu/h) (MW)	% Excess air overall	% Total air entering first stage	NO_x, ppm Corrected to 15% excess air (lb/10^6 Btu)	Fuel NO[c] yield (%)	Smoke Number ASTM (lb particulates per 10^6 Btu)
KVB (1979)	SRC II F.O. (2/1)	Package boiler, "	Fuel-rich burner, downstream 2° air injector	3 3 3	6 6 40	80 -- --	225 (0.3) 320 780	--	(0.2) (0.1)[d]
Con Ed	SRC II F.O. (5.75/1)	44-MW field boiler	Staging by fuel redistribution to lower burners and air redistribution	(44)	--	50	175	8-13	(0.03)
Babcock & Wilcox	SRC II F.O. (5.75/1)	Package boiler	"Dual-register" burner, separate control of inner and outer air flows[b]	45	1-2	d	400-480	--	(0.02)
Ontario Res. Found.		Vortometric burner 4-ft-ID tunnel	Vortometric burner + 8-ft. tunnel section fuel-rich; 2° air; 20-ft second-stage tunnel	5	11	50	150	--	(150 ppm CO)
Southern Calif. Edison	SRC II F.O. (4/1)	Test tunnel 3-ft-ID	TRW/SCE burner, nonstaging Radial fuel jets	10	6.5	d	330	22	Acceptable
Gulf Science Technology	Various Blends	Package boiler	Conventional air-atomizing burner, no staging; effect of blends on unreduced emissions	1	10-60	d	200-600	20-60	0.5-9
Westinghouse	Range of Coal Liquids	Single combustor in duct	Conventional combustors for stationary gas turbines, subscale and full scale	0.6	300-400	100	160-320	40-95	Various
Pratt & Whitney	Doped No. 2 oil	Single combustor	Gas turbine combustor low-NO_x design	--	300-400	75	75[e]	--	Acceptable

[a]Ratio of SRC II middle distillate (MD) to heavy distrillate (HD).

[b]Due to scaledown error, this unit functioned like a conventional B&W burner.

[c]There was no second-stage air injection downstream from burner.

[d]With combustion improver additive.

[e]Corrected to 15% O_2 in exhaust; at full load.

In a later program (Reference 8), an SRC II blend (5:1 middle-to-heavy distillates) was tested on a full-scale combustor used in the Westinghouse 30- and 90-MW engines. The SRC II blend with a FBN of 9.83 percent had NO_x emissions 30 to 120 ppm higher than No.2 distillate over an outlet burner temperature range of 1000 to 2000°F. Smoke values for the SRC II decreased with increasing exhaust temperature, which is the opposite of No. 2 distillate. A major corrosion study (187.5 hours) using various alloys and SRC II solvent wash showed that the SRC II wash solvent did not appear to present a corrosion or deposit problem any more severe than petroleum-derived fuels of similar properties. It was suggested, as with petroleum fuels, that sodium, potassium, lead, and vanadium be controlled.

Extensive handling and combustion testing was conducted by Babcock and Wilcox (Reference 13) using a package boiler and a 5.75:1 SRC II fuel oil. The physical properties of the SRC II fuel oil are shown in Table F-5. The SRC II is similar to No. 5 fuel oil in density, but in viscosity it behaves more like No. 2 fuel oil. This characteristic made it easy to pump and handle during the test program. The only handling precaution taken was to replace all hydrocarbon seals with Teflon or Viton seals because of SRC II's phenol/aromatic content. No handling problems were encountered with these precautions. Ambient monitoring programs for benzene and phenols emissions were negative.

The nitrogen content of the SRC II fuel oil was 0.8 percent compared to 0.03 and 0.2 percent for No. 2 and No. 5 fuel oils, respectively. Sulfur content of the SRC II fuel oil was essentially the same as for the No. 2 fuel oil and substantially below thatt of the No. 5 fuel oil. The NO_x levels measured under different conditions are summarized in Table F-6. In all cases the NO_x levels were higher than for the No. 2 and No. 5 fuel oils. However, Babcock and Wilcox concluded that because fuel/air mixing seems to play such a significant role with SRC fuel oil, it would appear that two-stage combustion could effect satisfactory control and bring emissions below EPA's new allowable limit of 0.5 pound NO_x/MBtu heat input for coal liquids.

Also, in spite of its high aromaticity, the SRC II fuel oil showed no tendency to smoke during combustion testing. In fact, particulate emissions from SRC fuel oil combustion were less than from No. 5 fuel oil combustion. Table F-7 compares the elemental analysis of ash from SRC II and from No. 5 fuel oils. Recalling that the SRC II had an ash content of 0.014 percent versus the 0.025 percent from No. 5 fuel oil, the elemental composition of SRC II fuel would be generally lower than the No. 5 fuel oil except for Fe, Ca, Mg, K, Cr, and Sn.

The most extensive testing to date of an SRC II fuel oil was done by KVB (Reference 14) at a Consolidated Edison 44-MW field boiler. The average SRC II fuel oil compositon compared to No. 6 fuel oil is shown in Table F-8. No major boiler operational problems were caused by the combustion of SRC II fuel oil. The optimization of burner hardware for SRC II fuel oil firing was not considered to be any more stringent than would

TABLE F-5. PHYSICAL HANDLING PROPERTIES OF SRC FUEL OIL VERSUS PETROLEUM DISTILLATES[13]

Parameter	SRC Fuel Oil[a]	No. 2 Fuel Oil	No. 5 Fuel Oil
Density			
API @ 77°F	12.4	40.3	16.0
API @ 60°F	11.5	39.0	15.1
S.G. @ 67°F	0.9895	0.8299	0.9652
Viscosity - Saybolt Universal Seconds			
@ 77°F	----	36.3	----
@ 80°F	47.7	----	----
@ 122°F	37.0	32.4	267
@ 145°F	34.4	32.0	143
@ 174°F	----	----	91
@ 204°F	----	----	67.2
Pour Point, °F	Below -35°	-20°	Zero°
Sediment by Toluene Extraction, %	0.05	None	0.10
Sediment and Water (ASTM D96-73)	1.0	None	1.9

(continued)

[a] Ratio of 5.75:1 Middle to Heavy Distillates

TABLE F-5. (CONTINUED)

Parameter	SRC Fuel Oil[a]	No. 2 Fuel Oil	No. 5 Fuel Oil
Miscibility			
% SRC in	----	Totally Miscible	Totally Miscible
% No. 2 in	----	----	Totally Miscible
% No. 2 and No. 5 Mixture in	Totally Miscible	----	----
Copper Corrosion (ASTM D130-75)	Moderate, 2b- Color: Lavender	Slight, 1b- Color: Dark Orange	Moderate, 2c- Color: Multicolored
Surface Tension, dynes/cm @ 22°C	34.1	29.9	34.5
Oxidation Stability mg/100 ml (ASTM D2274)	4.0	10.7	----

[a] Ratio of 5.75:1 Middle to Heavy Distillates

TABLE F-6. NO_x VALUES FOR SRC II, NO. 2 AND NO. 5 FUEL OILS UNDER VARIOUS CONDITIONS (PPM)[13]

Fuel	Fuel Bound N	Atomizer Design	Burner Design	Load
SRC II	475	410-610	400-600	360-475[a]
No. 5	225	200-225		100-225
No. 2	100			

[a] at 3% O_2

be required to accommodate similar changes for petroleum fuels. Boiler thermal efficiency levels were comparable to those obtained with No. 6 fuel oil. No adverse deposits were observed in the internal boiler either during the tests or in the post-combustion inspection.

Nitrogen oxide emissions were nominally 70 percent greater than those obtained from the No. 6 fuel oil under both baseline and low NO_x conditions. Assuming equivalent thermal NO_x formation, this implies a 10 percent conversion of the differential fuel nitrogen to NO_x conditions. Reductions in NO_x through staged combustion were on the order of 35 percent for both SRC II and No. 6 fuel oils. It would be expected that a boiler currently capable of satisfying the EPA New Source Performance Standards (NSPS) for NOx emissions of 0.3 lb/MBtu would be capable of satisfying the proposed 0.5 lb/MBtu NSPS for coal-derived liquids using an SRC II fuel oil equivalent to that burned in this test program.

Particulate mass emissions were nominally lower for SRC II fuel oil than for the No. 6 fuel oil and were below the EPA proposed New Source Performance Standards of 0.03 lb/MBtu under all test conditions (Figure F-3). The emissions at full load exhibited a bi-model size distribution composed of a large number of carbon particles with diameters on the order of 0.05 micron or less and a smaller number of agglomerated particles larger than 0.1 micron. The No. 6 fuel oil emissions did not exhibit this agglomerated behavior although the actual particle concentrations were higher than for the SRC II fuel oil. No mechanism was determined for the observed agglomeration, which was substantially reduced at lower boiler loads. The No. 6 fuel oil emissions contained a number of large particles (greater than 1 micron), indicative of an atomization-related formation mechanism. Such particles were not observed with the SRC II fuel oil, indicating potentially better atomization characteristics even though the actual atomizer components were not optimum for this fuel.

The PNA emission levels with both fuel oils were low-less than (6 x 10-6 lb/MBtu). Trends indicated by the PNA data, although qualified by the overall test uncertainty, indicated that emissions at half load were higher than those for full load with both fuels. The data also indicated that the

TABLE F-7. ASH ANALYSES - SRC FUEL OIL AND NO. 5 FUEL OIL

Sample No.	F-1442		F-1444
Sample Description	Ash From SRC Fuel Oil Sample #1199 Middile & Heavy Distillate[a]		Ash From No. 5 Heavy Fuel Oil, B&W-ARC (4/7/78) [b]
Spectrographic Analysis, %[c]	Semi-Quantitative	Quantitative Major Constituent	Semi-Quantitative
Silicon as SiO_2	29.5	29.5	48.2
Aluminum as Al_2O_3	30.0	27.0	29.0
Iron as Fe_2O_3	18.5	19.0	7.5
Titanium as TiO_2	0.7	0.9	0.7
Calcium as CaO	5.5	4.5	2.0
Magnesium as MgO	1.3	1.2	0.6
Sodium as Na_2O[d]	1.75	1.75	5.73
Potassium as K_2O[d]	1.35	1.35	0.24
Nickel as NiO	0.5	--	2.7
Chromium as Cr_2O_3	2.6	--	0.4
Molybdenum as MoO_3	0.1	--	<0.06
Vandium as V_2O_5	0.5	--	7.8 (Quantitative)
Cobalt as CoO	0.06	--	0.06
Manganese as MnO_2	0.4	--	0.06

(continued)

TABLE F-7. (CONTINUED)

Sample No.	F-1442		F-1444
Sample Description	Ash From SRC Fuel Oil Sample #1199 Middle & Heavy Distillate[a]		Ash From No. 5 Heavy Fuel Oil, B&W-ARC (4/7/78)[b]
Spectrographic Analysis, %[c]	Semi-Quantitative	Quantitative Major Constituent	Semi-Quantitative
Copper as CuO	<0.1	--	0.2
Zinc as ZnO	<0.3	--	<0.3
Lead as PbO	0.06	--	0.5
Tin as SnO_2	0.2	--	0.06
Zirconium as ZrO_2	0.06	--	0.06
Sulfur as SO_3[e]	--	6.1	2.9

a. Ash content 0.014% in flue oil

b. Ash content 0.025% in fuel oil

c. The elements are reported as the oxides because of the analysis method used. This does not imply their presence as such.

d. By Flame Photometer

e. Wet Chemical

TABLE F-8. AVERAGE FUEL PROPERTIES[13]

Parameter	No. 6 Fuel Oil	SRC II Fuel Oil[a]
API Gravity at 60°F	25.0	11.0
H_2O % by Volume	0.20	0.28
Sulfur % by Weight	0.24	0.22
Carbon % by Weight	87.02	85.50
Hydrogen % by Weight	12.49	8.86
Nitrogen % by Weight	0.23	1.02
Oxygen % by Weight	--	4.38
Heating Value (Btu/lb)	19,200	17,081
Ash % by Weight	0.02	0.02
Viscosity (sec.) Saybolt Universal at 100°F		40
Viscosity (sec.) Saybolt Universal at 122°F	300 700	
Pour Point (°F)	95	-30
Flash Point (°F)	>200	150

Note: Because of sulfur content limitations in New York City, the No. 6 oil utilized by Con Edison exhibits properties close to a No. 5 residual oil.

[a] SRC II 5.75:1 Middle to Heavy distillate ratio

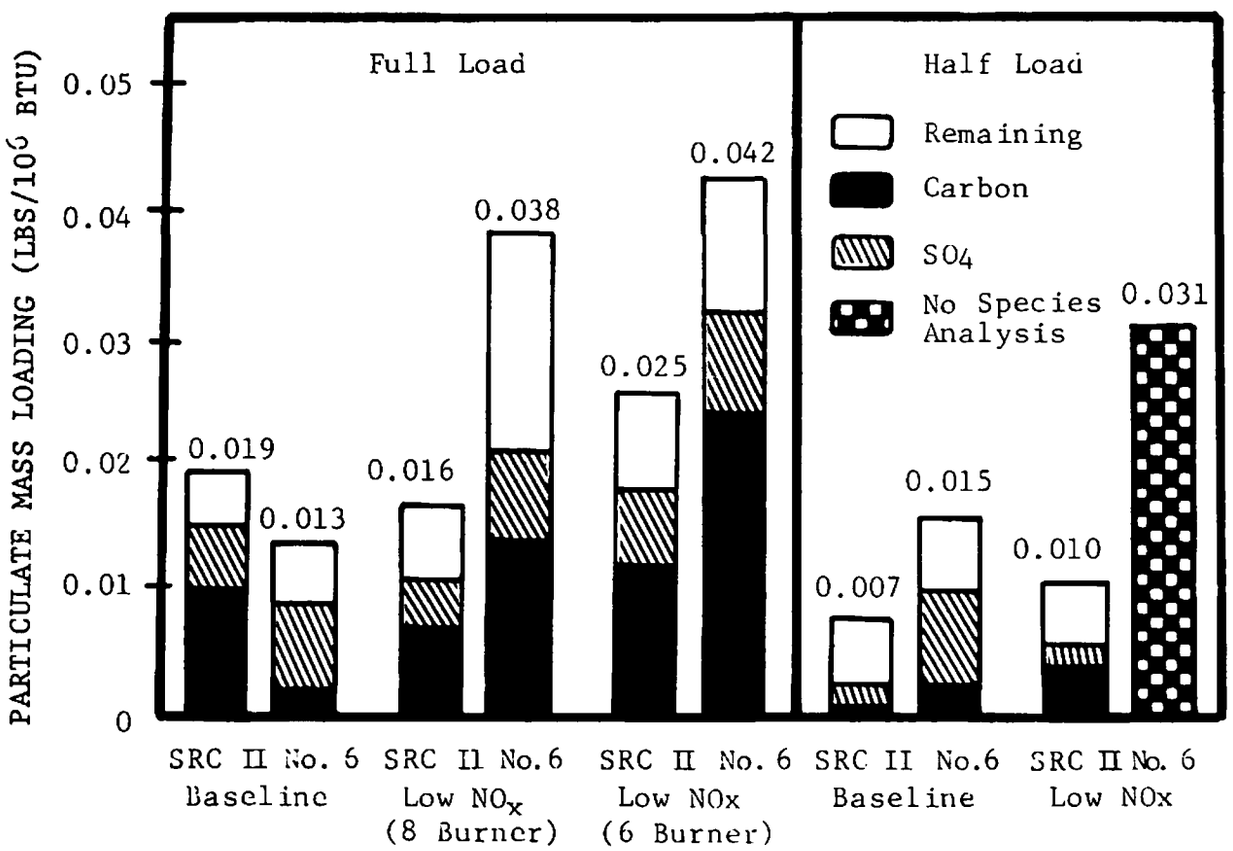

FIGURE F-3. Particulate Emissions Summary[14]

PNA emissions with SRC II fuel oil were nominally higher than those from the No. 5 fuel oil levels. All PNA emission levels with both fuels were substantially lower than those obtained on other programs (Reference 15) with coal-fired boilers. Compared to the shale oil and oil-fired tests (Table F-9), the values for the SRC II tests do not appear to be high. Because of the limited number of PNA samples and uncertainties in the combined sampling/extraction/analysis techniques, the absolute values of PNA emissions obtained must be interpreted with caution.

Carbon monoxide levels were maintained below 50 ppmv for all test conditions at generally equivalent total excess air levels for both fuels. Thus, the SRC II fuel oil used in this program did not indicate any greater tendency toward incomplete combustion than the existing No. 6 fuel oil.

F.2.2 H-COAL DISTILLATE COMBUSTION TESTS

Raw and hydrotreated H-coal distillate were tested (Reference 9) in a combustion turbine, modified to accept small quantities of liquid (1 to 2 gallons per hour). The hydrogen contents in the liquids tested range from 9.8 to 11.8 weight percent, and the nitrogen contents ranged from 0.38 to 0.04 weight percent. A petroleum-derived No. 2 fuel oil was used as a reference. The evaluations included fuel atomization, coke formation, combustion parameters, and emissions.

The H-Coal fuel tested was readily forwarded and atomized with no evidence of incompatibility with the No. 2 oil used for startup. There was no problem with deposits in fuel lines, and the fuel had excellent atomizing characteristics. This test did not indicate that the lighter fractions contained in the fuels may vaporize more readily than the bulk of the fuel, creating fuel-rich pockets of gas in the nozzle, and thus contribute to a coking problem. The test results did demonstrate that coke formation depended on the amount of hydrotreating. Increased hydrotreating reduced the coke formation to negligible levels. Coke formation would be a serious consideration in the utilization of all but the most severely hydroprocessed of the coal liquids. This tendency will have to be considered in both the selection of combustor modifications and the degree of fuel upgrading required.

The ratio of NO_x measured with H-Coal liquids to the baseline NO_x measured from No. 2 fuel oil combustion is plotted in Figure F-4 as a function of the nitrogen content of the fuel. Note that the NO_x values observed (134 ppm) for the severely hydrotreated H-Coal distillate (10.5 and 11.7 weight percent H) were lower than or equivalent to those for No. 2 fuel oil (148 ppm), even though the coal liquids had a slightly higher nitrogen content. In these cases the contribution due to fuel-bound nitrogen has compensated for the reduced thermal NO_x production rate. This is in agreement with the lower exhaust temperatures observed for H-Coal fuels compared to No. 2 fuel oil.

The level of CO observed in each of the tests was sufficiently low (31 to 41 ppm) and consistent to conclude that CO would not be a concern. The

TABLE F-9. COMPARISON OF SHALE OIL, SRC II AND TYPICAL PETROLEUM FUELS AND COMBUSTION EMISSIONS ($\mu g/m^3$)

	PETROLEUM FUEL OIL AND SHALE OIL				SRC II AND NO. 6 FUEL OIL				
Chemical Compound	Oil Fired Utility Boiler[d,6]	Oil Fired Utility Boiler[c,2]	Oil Fired Utility Boiler[d,7]	Shale Oil/Crude Oil Fired Utility Boiler[a,1]	SRC-II Fuel Oil Low NO_x Full Load[e,14]	SRC-II Fuel Oil Baseline Half Load[14]	SRC-II Fuel Oil Baseline Full Load[14]	No. 6 Fuel Oil Low NO_x Full Load	No. 6 Fuel Oil Low NO_x Half Load
Naphthalene	5								
Phenanthridine	0.3								
Dibenzothiophene	0.6								
Anthracene/Phenathrene	0.6	0.008 - 2.13	0.024		2.2 - 3.09	2.82	1.63	1.13	1.37
Fluoranthene	1	0.007 - 0.098	0.009		0.48 - 0.50	0.68	0.41	0.43	0.88
Pyrene	1	0.006 - 0.051	0.0004		0.30 - 0.38	0.58	0.16	0.35	0.49
Chysene/benz(a) anthracene	0.1		0.00019	0.42[b]	0.50 - 0.70	0.97	0.24	0.43	0.78
Benzopyrene/Perylenes	0.04				<0.003 - 0.01[2]	0.019[g]	0.008[g]	0.009[g]	0.01
Benzo (a) pyrene			0.032	0.15					
Benzo (e) pyrene			0.032	0.12					
Benzo(g,h,i) Perylene				0.23	0.03 - 0.17	0.15	0.041	0.052	0.059
Benzo fluoranthenes			0.00005		0.1 - 0.2	0.19	0.082	0.09	0.098
Methyl Anthracenes/Phenathrenes		<0.1 - 0.21[b]			0.48 - 1.03	2.14	0.49	0.35	0.59
Benzo(c) Phenanthrene					0.02 - 0.08	0.12	0.016	0.0009	<0.003
Methyl Chrysenes					0.10	0.39	0.041	0.09	0.098
7,12 Demethylbenz(a) anthracene					0.010	0.060	0.008	0.009	<0.003
Benzo(a) pyrene/Benzo(e) Pyrene					0.02 - 0.06	0.05	0.008	0.009	0.01
Indino (1,2,3-cd) pyrene					0.11 - 0.18	0.039	0.057	0.052	<0.003
TOTAL	9.24	<0.1 - 2.49	0.10	0.92	4.83 - 6.03	8.21	3.19	3.01	4.39

(a) 49.3% Shale Oil, 50.7% Low Sulfur Crude
(b) Benz (a) anthracene
(c) Range from 3 plants, filter sampling only
(d) XAD-2 Resin Sampling
(e) Two runs listed - Low NO_x Burner
(f) Methyl Anthracenes
(g) Perylenes

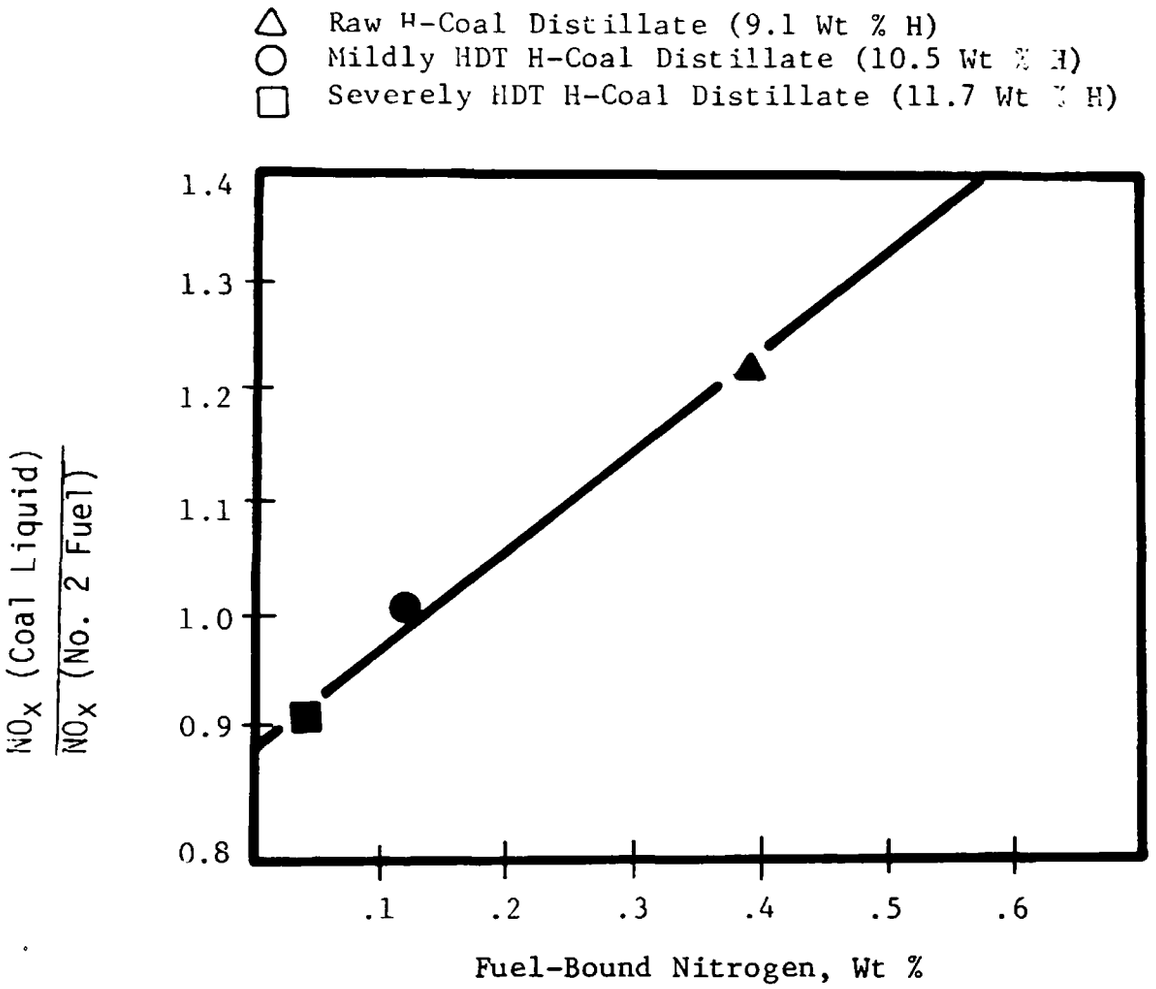

Figure F-4. Relative NO_x Values as a Function of the Fuel-Bound Nitrogen Content of the H-Coal Fuels[9]

unburned hydrocarbons (UHCs), however, did increase with the percent of hydrogen in the fuel suggesting that improved wall cooling, which will be required in a can-type combustor for coal liquids, may also return UHC to more typical levels. Combustor designs incorporating hot ceramic walls should be capable of particularly low levels of UHCs.

Available operating time was insufficient to establish the corrosion, erosion, or deposition characteristics of each of the fuels. Because only relatively low levels of alkali metals are present in the fuels, longer periods of exposure are required before definitive data on the rate of attack or deposition can be established. The trace alkali metals found in the H-Coal liquids are not organically bound and can be removed by careful distillation. The inorganic materials in the coal liquids are also significantly reduced by hydroprocessing, presumably by deposition the hydrotreating catalyst. This lowered nonhydrocarbon content should contribute to a longer turbine life.

In a test program (Reference 5) to study the effects of burning synthetic fuels in a gas turbine, H-Coal 210-480°F distillate, 300-500°F distillate, 450-650°F distillate, and atmospheric bottoms were combusted in a subscale gas-turbine-like combustor. No significant handling problems were encountered, though fuel quality (water content, suspended particles, etc.) did cause some minor problems. The NO_x levels were measured and compared to No. 2 distillate. The results that showed approximately 30 to 60 ppm more NO_x was emitted by the H-Coal fuels. Smoke levels were similar to the No. 2 distillate, but did show some increase as hydrogen content decreased or aromaticity increased.

Later tests (Reference 8) on a full scale combustor were conducted with the H-Coal 210-480°F distillate. This fuel had a nitrogen content of 0.17 percent (the No. 2 fuel had no nitrogen) yet showed a NO_x increase of only 20 ppm. Smoke values for the H-Coal were generally lower than for the No. 2 fuel oil except at exhaust temperatures above 1750°F.

F.2.3 COMBUSTION/HANDLING PROPERTIES OF EDS COAL LIQUIDS

A study by Stone and Webster (Reference 15) concluded that existing oil-fired boilers can be converted to accept EDS fuels. Only minimal changes to existing equipment would be required for four of the five types of EDS fuels. The required changes are associated primarily with the incompatability of coal liquids and petroleum-derived fuels. When EDS fuels are mixed with petroleum fuels, a thick sludge forms that will cause problems in fuel oil lines, tanks, heaters, and other equipment. Therefore, all types of EDS fuels will require either separate fill lines, or the lines must be washed with a mutually compatible flux stock from dedicated storage tanks.

The viscosity of three types of EDS fuels studied was less than that of a No. 6 petroleum fuel; therefore, these types will require less heating for pump transfer. One type had a viscosity similar to that of No.

6 petroleum fuel oil and will not require any changes to existing stream tracing or heaters. The viscosity of the Type 3 EDS fuel, which is a blend of streams above the 700°F plus boiling range, will require heating to approximately 260°F during storage and transfer and 400°F during firing to satisfy burner viscosity requirements of 150 saybolt second universal (SSU). Some existing piping systems, steam tracing, in-tank heaters, and station fuel oil heaters will have to be replaced.

EDS fuels may degrade if the liquid is exposed to air and stored at temperatures of 100°F or higher for several months. Nitrogen blanketing of floating roofs would be required in existing storage tanks for two types of EDS fuels.

Quinlan (Reference 16) discussed the results of combustion studies conducted by Exxon on various fuel oils (Table F-10). The combustion tests were run in a 50 hp Cleaver-Brooks firetube package boiler with a nominal firing rate of 15 gallons per hour. Smoke emissions, particulate emissions, and gaseous NO_x emissions were measured. The Cleaver-Brooks combustion tests indicate that heavy coal liquids burn easily and cleanly. No problems were encountered in tests areas such as flame light off, nozzle fouling, or shutdown, although the test period was relatively short. The coal liquids burned very clean as judged by comparing their smoke emissions to those for conventional petroleum fuels. The petroleum fuels were a regular sulfur fuel oil (2.2 weight percent S) and a low-sulfur fuel oil (0.5 weight percent S). The coal liquids were an Illinois coal derived 400°F plus blend and a minimal 400-1000°F blend which represents the EDS product without the liquids from FLEXICOKING.

The primary conclusion from these data is that Illinois coal liquids burn with smoke levels equal to or lower than petroleum fuel oils at all levels of excess air. Over the range of excess air from 10 to 30 percent, the coal liquids gave a Bacharach Smoke Number of 1 or less. Below 10 percent excess air, Bacharach Smoke Numbers for the coal liquids increased more slowly than for petroleum fuels so that even at excess air levels of only a few percent, tolerable smoke emissions were obtained in this test. A second conclusion is that except at very low excess air levels (5 percent), the presence of the heavier liquids from FLEXICOKING at about 25 weight percent of the 400°F plus blend did not significantly affect the smoke levels from the coal liquids.

Table F-10 compares particulate and NO_x emissions for the EDS liquids with those from the low sulfur and regular sulfur fuel oil. The particulate emissions from the coal liquid fuels were very low -- roughly half from the low-sulfur fuel oil, which is itself a low particulate fuel. The regular sulfur fuel is actually more typical of a conventional heavy fuel. It has four or five times as many particulate emissions as the coal liquids. As a frame of reference, the current New Source Performance Standards for power generation boilers for ash content is about 0.18 weight percent. The regular sulfur fuel oil was about equal to that standard, and coal liquids were well below it.

TABLE F-10. EDS FUEL OIL COMBUSTION TEST PARTICULATE AND NO_x EMISSIONS[18]

Emission Type	Heavy Fuel Oil Liquids		Petroleum Fuel Oils		Distillate Fuel Oils			
Particulate Emissions	400-1000°F	400°F+	LSFO	RSFO	Raw 400-800°F	Mild H/T 350-650°F	Severe H/T 350-650°F	No. 2 Fuel Oil
Total Particulates, mG/SCM	27	33	50	131	—	—	—	—
Total Particulates, Wt. % on Fuel	0.03	0.04	0.06	0.17	—	—	—	—
Ash Content of Sample, Wt. %	0.027	0.03	0.02	0.08	—	—	—	—
NO_x Emissions								
Nitrogen, Wt. % on Sample	0.55	0.81	0.13	0.44	—			
Flue gas NO_x Concentration, PPM (Corrected to 3% O_2)	490	580	300	440	163	60	51	57 - 64

LSFO = Low Sulfur Fuel Oil

RSFO = Regular Sulfur Fuel Oil

The particulate level for coal liquids is low because that practically all of the carbon burns out. Total mass emissions from the coal liquids are only slightly than the fuel ash content; whereas, in the petroleum fuels they are significantly higher. This difference probably reflects the volatility of the heaviest materials in the fuels. All of the coal liquid is volatile, so it evaporates and burns as a vapor. The petroleum fuels contain asphaltenes, which are not volatile and form droplet residues that burn out very slowly.

The NO_x emissions from the coal liquids were higher than those from the petroleum fuel oils, reflecting their higher fuel nitrogen content. The two coal liquids gave 490 and 580 ppm respectively, compared with 300 and 400 ppm for the two petroleum fuel oils. All of these values are higher than the current New Source Performance Standard for oil-fired utility boilers, which is about 225 ppm. However, the coal liquids just about meet the expected new standard for coal-fired boilers, which is 550 ppm.

Another potential EDS product is a distillate fuel oil. This product ranges from a raw solvent (nominally 400/800°F) to a severely hydrotreated 350/650°F product (hydrogen consumption: 300 SCF/bbl) (Table F-11). The major difference between EDS coal liquid middle distillates and conventional petroleum products is that raw and mildly hydrotreated products have lower API gravity and hydrogen content because of their highly aromatic nature. Raw Illinois coal middle distillate products, both 400/800°F and 350/650°F, exhibit high sulfur and nitrogen contents compared with conventional petroleum products. Studies have shown that even mild hydrotreating (500 SCF/bbl) substantially reduces both sulfur and nitrogen. With severe hydrotreating (3000 SCF/bbl), the low ppm levels indicated for the severly hydrotreated 350/650°F are attained.

The combustion performance of the coal middle distillates was evaluated by burning studies on a conventional 1 gallon-per-hour domestic oil burner unit. Raw and hydrotreated coal liquids were run in a domestic gun burner and the results were compared with results using a petroleum No. 2 fuel oil at the same combustion conditions. The coal liquids burned cleanly, giving essentially the same smoke number as the petroleum fuel at a given level of excess air. The severely hydrotreated coal liquids (30 API gravity) could be substituted for the petroleum No. 2 fuel without any adjustment of the air shutter. It is likely that this fuel could be used interchangeably with a petroleum No. 2 in the field. NO_x emissions (Table F-10) from the raw EDS liquids were significantly higher than those from the petroleum or from the hydrotreated coal liquid; this can be attributed to the higher nitrogen content of the raw coal liquids. At the present time there are no NO_x emission standards for domestic fuel combustion.

A study (Reference 5) of the combustion characteristics of EDS process liquid and EDS process liquid without the 650°F fraction was conducted using a sub-scale gas-turbine-like combustor. NO_x and smoke levels were

TABLE F-11. PROPERTIES OF EDS FUEL OILS[18]

Properties	Middle Distillate Fuel Oil			Heavy Fuel Oil	
Handling Characteristics	Raw 400-800°F	Hydrotreated 350/650°F	ASTM Specification No. 2 Fuel Oil	Raw EDS 400°F+ Liquid	ASTM Specification No. 6 Fuel
Gravity, ° API	18	30	30 Min.	0	–
Flash, °F	196	120	100 Min.	196	140 Min.
Pour, °F	-5	-70	20 Max.	40	60 Max.
Viscosity, ssu at 100°F	38	32	33 Min.	158	40 - 300
Sediment, Wt. %					
Combustion Properties					
Higher Heating Value, Btu/lb	19000	20500	–		
Carbon Residue (10% Bottoms), Wt. %	3.0	0.01	0.35 Max.	16,700	–
Hydrogen Content, Wt. %	10	13	–	151,000	–
Environmental Considerations					
Sulfur, Wt. %	0.3	0.004	–	0.8	–
Nitrogen, Wt. %	0.2	<0.001	–	1.0	–

slightly higher than for the No. 2 distillate. Over the range of exhaust temperatures, excess NO_x ranged from 60 to 75 ppm for the whole process liquid, which had a nitrogen content of 0.08 percent.

F.3 CHEMICAL CHARACTERIZATION OF INDIRECT COAL LIQUIDS COMBUSTION

No data on the emissions from combustion of Fischer-Tropsch or Mobil M-Gasoline are available. However, the uncontrolled emissions from methanol fueled automobiles are reasonably well documented. Tests indicate that CO emissions are approximately the same as from the gasoline engine and NO_x emissions are somewhat lower. Hydrocarbon emissions are about the same and are dominated by unburned methanol fuels. Polynuclear aromatic emissions are reduced to as little as one-tenth; but aldehydes, particularly formaldehyde, are increased three- to five-fold. No lead or sulfur are emitted (Reference 16).

F.4 CHEMICAL CHARACTERIZATION OF LOW/MEDIUM

Tables F-12 and F-13 list the components of the flue gas from the test burner that was burning the low-Btu product gas characterized in Appendix E. It can be seen that a wide variety of trace and minor elements can be emitted as a result of burning low-Btu gas. Chemical analysis also indicated that organic species present in the test burner flue gas were more highly carboxylated than those in the uncombusted product gas. The aromatics present were relatively simple ring systems, and the fractions contained fewer indications of nitrogenous compounds than the product gas. Benzo(a)anthracene was specifically identified in the test burner flue gas at 450 µg/SCM. Benzo(a)pyrene, dibenzo(a, h)anthracene, and 7, 12 dimethylbenzo(a)anthracene were present in the product gas but did not appear in the fraction of the test burner flue gas that was analyzed (Reference 17).

TABLE F-12. Gaseous Species Analysis Summary: Low-Btu Test Burner Flue Gas[17]

Analysis	Test Burner Flue Gas
Major Components (% ± 2)	
CO_2	5.4 ± 2.2
H_2	ND[a]
O_2 + Ar	16. ± 4.8
N_2	77.8 + 5.2
CO	ND
CH_4	ND
Sulfur Species (Vppm ± 2)	
H_2S	NDa
COS	NDa
SO_2	103 ± 122
CS_2	2.8 ± 5.1
Total volatile sulfur	NR
C -C Hydrocarbons (Vppm ± 2)	
CH_4	ND
C_2H_6	ND
C_2H_4	ND
C_3 + isomers	NDa
C_4 + isomers	NDa
C_5 + isomers	NDa
C_6 + isomers	
Nitrogen Species (Vppm ± 2)	
NH_3	<0.005
HCN	1.0 ± 1.0
Metal Carbonyls (Vppm)	NR

ND not detected; NR no results.

[a]One detectable measurement out of four analyses.

TABLE F-13. Trace and Minor Element Compositions of Low-Btu Test Burner Flue Gas[17]

Element	Test Burner Flue Gas		
	Particulate µg/SCM	Vapor µg/SCM	Total µg/SCM
Aluminum	1.9	14	16
Antimony	<0.3	<11	<11
Arsenic	0.40	86	86
Barium, Beryllium, Bismuth	<120	4.6	>120
Boron	0.16	3.8	0.44
Bromine	0.096	0.34	0.44
Cadmium	0.024	>0.2	>0.2
Calcium	>120	660	>780
Cerium	0.34	0.28	0.62
Cesium	0.0066	1.1	1.1
Chlorine	0.99	32	33
Chromium	0.59	36	37
Cobalt	0.14	130	130
Copper. Dysprosium, Erbium,	1.2	8.1	9.3 Europium
Fluorine, Gadolinium	1.0	99	100
Gallium	0.29	<1	<1.3
Germanium, Gold, Hafnium,	0.20	0.20	
Holmium			
Iodine		0.66	0.66
Iridium			
Iron	>120	190	>310
Lanthanum	0.40	0.44	0.84
Lead	3.2	12	15
Lithium	1.3	<0.07	<1.4
Lutetium			
Magnesium	>120	16	>130

(Continued)

TABLE F-13. (CONTINUED)

Element	Test Burner Flue Gas Particulate µg/SCM	Vapor µg/SCM	Total µg/SCM
Manganese	0.44	17	17
Mercury	0.0011	16	16
Molybdenum	<0.2	18	18
Neodymium	0.025		0.025
Nickel	1.4	44	45
Niobium	0.037	0.07	.10
Osmium			
Palladium			
Phosphorus	6.8	160	170
Platinum		1.3	1.3
Potassium	>120	370	>490
Praseodymium	0.013		0.013
Rhenium			
Rubidium	0.15	<0.2	<.35
Ruthenium			
Samarium			
Scandium	<0.01	<0.04	<.05
Selenium	<0.3	<130	<130
Silicon	>120	170	>290
Silver	0.92	a	0.92[a]
Sodium	>120	23	>140
Strontium	3.5	2.0	5.5
Sulfur	120	a	120a
Tantalum			
Tellurium			
Terbium			
Thallium			

(Continued)

TABLE F-13. (CONTINUED)

Element	Test Burner Flue Gas Particulate µg/SCM	Vapor µg/SCM	Total µg/SCM
Thorium			
Thulium			
Tin	0.074	1.4	1.5
Titanium	2.7	18	21
Tungsten			
Uranium	<.04		<.04
Vanadium	0.15	3.4	3.6
Ytterbium			
Yttrium	<0.02		<0.02
Zinc	0.99	12	13
Zirconium	0.25	12	12

[a] $Ag_2S_2O_8$ impinger solution.

a $Ag_2S_2O_2$ impinger solution.

Not listed: test burner flue gas .01 g/SCM

SCM at 25°C (770°F) and 101 kPa (1 atm), dry basis.

REFERENCES

1. Southern California Edison and Paraho Oil Shale Demonstration, Inc. "Emission Characteristics of Paraho Shale Oil as Tested in a Utility Boiler". EPRI AF-709, March 1978.

2. Bennett, R. L. and K. T. Knapp. "Chemical Characterization of Particulate Emissions from Oil-Fired Power Permits". Fourth National Conference on the Environment, Cincinnati, Ohio, October 1976.

3. Cato, G. A., L. J. Muzio and R. E. Hall. Proceedings from the Stationary Source Combustion Symposium, Volume III -- Field Testing & Surveys. EPA-600/2-76-152c, June 1976.

4. Finch, S. and S. Morris. "Consistency of Reported Health Effects of Air Pollution". Brookhaven National Laboratory, BNL-21808.

5. Singh, P. D. et al. "Combustion Effects of Coal Liquid and Other Synthetic Fuels in Gas Turbine Combustors." Proceeding of ASME Conference. New Orleans, LA, March 10-13, 1980, ASME Publication 80-GT-67.

6. Leavitt, C., et al. "Environmental Assessment of an Oil-Fired Controlled Utility Boiler." EPA 600/7-80-087, April, 1980.

7. Carter, W. A., H. J. Buening, and S. C. Hunter. "Emission Reduction on Two Industrial Boilers with Major Combustion Modifications". EPA-600/7-78-099a, June 1978.

8. Bauserman, G. W., C. J. Spengler, A. Chohn. "Combustion Effects of Coal Liquid and other Synthetic fuels in Gas Turbine Combustors Part II: Full Scale Combustor and Corrosion Tests". Presented at the Gas Turbine Conference and Products Show, New Orleans, Louisiana, March 10-13, 1980.

9. Mobil Research and Development Corporation. "Upgrading Coal Liquids for Use as Power Generation Fuels". EPRI Report AF-1255, December 1979.

10. Cabal, A. V., et al. "Utilization of Coal-Derived Liquid Fuels in a Combustion Turbine Engine". Proceedings of National American Chemical Society. Miami Beach, Florida, September 1978.

11. Mansour, M. N. "Factors Influencing NO_x Production During the Combustion of Gulf's SRC II." So. California Edison Final Report Number 79-RD-7, March 1979.

12. Oak Ridge National Laboratory. "Draft Environmental Impact" Statement: Solvent Refined Coal-II Demonstration Project. Fort Martin, West Virginia, May 19, 1980.

13. Babcock & Wilcox Co. "Characterization of SRC II Fuel Oil". EPRI Report No. FP-1028, June 1979.

14. KVB, Inc. "Combustion Demonstration of SRC II Fuel Oil in Tangentially Fired Boiler". EPRI FP-1029, May 1979.

15. Electric Power Research Institute. "Effectiveness of Gas Recirculation and Staged Combustion in Reducing NO_x on a 560-MW Coal-Fired Boiler". EPRI FP-257, September 1976.

16. Timourian, H. and F. Milanovich. "Methanol as a Transportation Fuel: Assessment of Environmental and Health Research". UCRL52697, Lawrence Livermore Laboratory, Livermore, California, 1979.

17. Kilpatrick, M. P. et al. "Environmental Assessment: Source Test and Evaluation Report; Wellman-Galusha (Ft. Snelling) Low-Btu Gasification". EPA-600/7-80-097, U. S. Environmental Protection Agency, Washington, D. C., May 1980.

18. Quinlan, C.W., and C. W. Siegmund. "Combustion Properties of Coal Liquids from the Exxon Donor Solvent Process". Proceedings of American Chemical Society Symposium Combustion of Coal and Synthetic Fuels. Anaheim, California, March 14, 1978.

APPENDIX G

HEALTH EFFECTS TEST RESULTS FOR

SYNTHETIC FUEL PRODUCTS

TABLE OF CONTENTS

		Page
G.1	Shale Oil Products	G-3
	G.1.1 Crude Shale Oil	G-3
	G.1.2 Middle Distillates	G-4
	G.1.3 Gasoline	G-11
	G.1.4 Residual Fuel Oil	G-11
G.2	Direct Coal Liquids	G-11
	G.2.1 SRC II	G-11
	G.2.1.1 Naphtha	G-12
	G.2.1.2 Light Fuel Oil	G-14
	G.2.1.3 Heavy Distillate	G-15
	G.2.2 H-COAL Products	G-17
	G.2.2.1 Naphtha	G-17
	G.2.2.2 Fuel-Oil	G-19
	G.2.3 Exxon Donor Solvent	G-19
G.3	Indirect Coal Liquids	G-19
	G.3.1 Fischer-Tropsch Gasoline	G-21
	G.3.2 Mobil-M Gasoline	G-21
	G.3.3 Methanol	G-21
G.4	Health Effects of Coal Gases	G-22
	G.4.1 SNG	G-22
	G.4.2 Low-/Medium-BTU Gases	G-23
G.5	Synthetic Fuel Combustion Products	G-23

TABLES

Number		Page
G-1	Mutagenicity of Shale Oil and Petroleum Crudes In Ames/*Salmonella* Test	G-4
G-2	Comparison of the Mutagenicity of Solvent Refined Coal Materials, Shale Oils, and Crude Petroleums in *Salmonella typhimurium* TA 98	G-5
G-3	Distribution of Mutagenic Activity in Shale-Derived Oils	G-6
G-4	Cytotoxicity of Fossil Fuel Materials and Metals in Cultured Vero Cells	G-7
G-5	Effect of Solvent Refined Coal Materials, Shale Oil and Petroleum Crudes on Cloning Efficiency and Transformation Frequency in Syrian Hamster Embryo Cells	G-8
G-6	Skin Tumor Incidence in Mice at 456 Days of Exposure to Fossil Fuel Materials or Known Carcinogens	G-9
G-7	Mouse Skin-Painting Initiation/Promotion Study	G-10
G-8	Guinea Pig Skin Sensitization Test Results for Refined Shale Oil Products	G-11
G-9	Comparison of the Acute and Subchronic Toxicities of SRC Materials in the Female Wistar Rat	G-13
G-10	Maternal and Fetal Toxicity in Rats Following Dosing with SRC II Materials from 12 to 16 Days of Exposure	G-16
G-11	Ames Test Results for Petroleum and H-Coal Products	G-18
G-12	Health Effects Test Results for H-Coal Fuel Oils	G-18
G-13	Distribution of Mutagenic Activity in H-Coal	G-20

G.1 SHALE OIL PRODUCTS

The major commerical shale oil products are anticipated to include crude shale oil, middle distillates (jet fuel and diesel fuel), and residual fuel oil. Several different shale oil products are available from the EPA/DOE Fossil Fuels Research Material Facility at the Oak Ridge National Laboratory, and each available product is being tested for health and ecological effects. Some results of the from health effects tests are available and are reviewed in this appendix, but no results from ecological effects testing are yet available.

G.1.1 CRUDE SHALE OIL

The relative toxicity of crude shale oil has been investigated in a battery of tests including mutagenicity, cytotoxicity, cell transformation, epidermal carcinogenesis, and acute oral toxicity tests. Tables G-1, G-2, and G-3 present results of Ames Salmonella tests conducted on crude retort shale oil, crude in situ shale oil, and crude petroleum oils. The data presented in these tables indicate that crude retort shale oil and in-situ shale oil are slightly more mutagenic than crude petroleum oil.

In mammalian cell culture studies, shale oil was one of the most cytotoxic fossil-derived materials tested and was considerably more cytotoxic than either of the crude petroleum oils tested (Table G-4). As shown in Table G-5, shale oil also produced a higher percentage (3 percent) of transformed cell colonies than crude petroleum (0.2 to 0.4 percent).

Skin-painting studies with mice indicate that crude shale oil is more potent than crude petroleum at inducing tumors. As shown in Table G-6, the incidences for the high- and medium dose shale oil group are 100 percent and 82 percent, respectively; the incidence for the high- and medium-dose group for Wilmington crude are lower at 42 and 7 percent. The minimum latency period is also lower for shale oil than for Wilmington crude. Table G-7 presents the results at 180 days of a mouse skin-painting study in which doses corresponding to the "medium" dose in the study discussed above were administered to 30 mice. Although the shale oil crudes were similar in tumor initiating activity to the petroleum crude, the Paraho crude (retort) was a little more potent than the South Louisiana crude, and the Geokinetics crude (in situ) was a little less potent than the South Louisiana crude (Reference 1).

Acute toxicity studies measured the oral rate LD_{50} for shale oil at 9.22 mg/kg of body weight. The LD_{50} for crude petroleum was reported at >12 mg/kg (Reference 1). Based on the LD_{50} values, both products would be considered slightly toxic in comparison with other organic chemicals (Reference 11).

The preliminary limited data which are available for crude shale oil indicate that shale oil may pose a slightly more severe hazard with regard to mutagenicity (Ames test results) and carcinogenicity (cell transformation and epidermal carcinogenesis studies) than crude petroleum. Further

TABLE G-1. MUTAGENICITY OF SHALE AND PETROLEUM CRUDES IN AMES/*SALMONELLA* TEST[1]

Material	S. Typhimurium Strain (with activation)				
	TA 1535	TA 1537	TA 1538	TA 98	TA 100
So. Louisiana Crude	N[a]	N	N	N	0.02[b] (1.8)[c]
Paraho Crude	N	0.07 (12.0)	0.55 (41.9)	0.70 (29.7)	0.50 (2.8)
Geokinetics Crude in situ	N	0.03 (4.3)	0.10 (6.0)	0.10 (5.7)	0.9 (1.7)

[a]N No response

[b]Revertants per g (average). Comparisons of revertant(s) per g values among strains can be misleading because there values are strongly influenced by spontaneous frequencies.

[c]The maximum average number of revertants observed expressed as a multiple of the average spontaneous reversion frequency.

studies, some of which are currently underway, will confirm or refute these preliminary findings.

G.1.2 MIDDLE DISTILLATES

The U.S. Navy tested petroleum JP-5, petroleum DFM (diesel fuel marine), shale JP-5, and shale DFM for primary dermal irritation, primary eye irritation, and dermal sensitization. They are also currently testing shale-derived JP-5 and DFM for acute and sub-chronic toxic effects from vapor exposure. Samples of these petroleum- and shale-derived products are available for testing from the Fossil Fuels Research Program at the Oak Ridge National Laboratory, and several researchers are conducting a variety of tests for toxicity and ecological effects (Reference 5).

TABLE G-2. COMPARISON OF THE MUTAGENICITY OF SOLVENT REFINED COAL MATERIALS, SHALE OILS, AND CRUDE PETROLEUMS IN *SALMONELLA TYPHIMURIUM* TA 98[2]

Materials	Revertants/μg of Material
SRC II	
Heavy distillate	40.0 ± 23
Middle distillate	0.01
Light distillate	0.01
SRC I	
Process solvent	12.3 ± 1.9
Wash solvent	0.01
Light oil	0.01
Shale Oil	
Paraho-16	0.60 ± 0.19
Paraho-504	0.59 ± 0.13
Livermore L01	0.65 ± 0.22
Crude Petroleum	
Prudhoe Bay	<0.01
Wilmington	<0.01
Pure Carcinogens	
Benzo(a)pyrene	114 ± 5
2-Aminoanthracene	5430 ± 394

TABLE G-3. DISTRIBUTION OF MUTAGENIC ACTIVITY IN SHALE-DERIVED OILS[3]

Sample	Total (Rev/μg)[a]	Mutagenic Activity Distribution (%)			
		Neutral	Acids	Bases	Other
Shale Oil in situ	178	54	2	42	2
Paraho Shale Oil	390	31	0	69	0
HDT-Paraho Shale Oil	0	0	0	0	0
Wilmington Crude Oil	5	100	0	0	0
Recluse Crude Oil	6	100	0	0	0

[a]Determined from the linear portion of a dose-response curve with strain TA 98

The only test results available are from the Navy's skin and eye irritation tests. According to these tests, all four of the fuels tested would be considered non-irritants; there is no irritation hazard to humans who come into contact with them. However, one would expect that frequent or prolonged contact would cause depletion of skin oils, making the skin more susceptible to irritation (Reference 6). In primary eye irritation tests, only shale DFM produced any signs of irritation. One rabbit of six that were tested by applying 0.1 ml of undiluted fuel to one eye developed a very mild redness and discharge 24 hours following treatment. At 48 hours, the redness and discharge disappeared, and the eye had returned to a normal state of appearance (Reference 6).

A repeated insult skin-sensitization study using guinea pigs was carried out to predict whether allergic contact dermatitis would result in humans after skin contact with the test materials (Table G-8). The size as well as the intensity of the irritation was evaluated semi-quantitatively and reported as the sensitization response. The sensitizing potential of the test material was estimated from the number of animals having at least a mild sensitization response. Twenty animals were tested. The test material's sensitizing potential was judged "slight" if one to three animals were sensitized, "moderate" for four to ten sensitizations, and "severe" for 11 to 20 sensitizations.

TABLE G-4. CYTOTOXICITY OF FOSSIL FUEL MATERIALS AND METALS IN CULTURED VERO CELLS[2]

Material	RPE_{50} Dose (μg/ml)[a]
SRC II	
Heavy distillate	30
Middle distillate	200
Light distillate	180
Shale Oil (S-11)	50
PNA fraction	40
Basic fraction	50
Neutral fraction	200
Petroleum	
Prudhoe Bay Crude	350
Wilmington crude	190
Diesel oil #2	250
Metals	
Cadmium chloride	0.3
Zinc Chloride	6.8
Lead chloride	37

[a] RPE_{50} dose required to reduce number of colony-producing cells to 50% of control value.

TABLE G-5. EFFECT OF SOLVENT REFINED COAL MATERIALS, SHALE OIL AND PETROLEUM CRUDES ON CLONING EFFICIENCY AND TRANSFORMATION FREQUENCY IN SYRIAN HAMSTER EMBRYO CELLS[2]

Material	Concentration (µg/ml) to produce maximum transformation frequency	Percent of colonies transformed	Relative cloning efficiency (%)
Dimethylsulfoxide	0	0	100
Heavy distillate (SRC-II)	20	6.8	33
Shale oil (LERC)[a]	10	2.7	34
Basic fraction	10	8.9	77
PNA fraction	50	3.4	74
Prudhoe Bay crude	200	0.4	23
Wilmington crude	100	0.2	48
Benzo(a)pyrene	20	11.0	42

[a]Laramie Energy Research Center

TABLE G-6. SKIN TUMOR INCIDENCE IN MICE AT 456 DAYS OF EXPOSURE TO FOSSIL FUEL MATERIALS OR KNOWN CARCINOGENS(2)

Treatment	Dose (mg/application)	Tumor Incidence[a]	Minimum Latency (days)	Median Latency (days)[b]	Maximum Latency (days)[c]
Control - Untreated	----	0/49	----	----	----
Vehicle control (acetone)	----	0/47	----	----	----
Heavy distillate	22.8	49/49	56	95	147
SRC-II	2.3	47/47	72	294	372
	0.23	6/48	282	----	----
Light distillate	20.0	1/44	410	----	----
SRC-II	2.0	1/46	427	----	----
	0.2	0/41	----	----	----
Shale Oil	21.2	38/38	95	213	409
	2.1	41/50	148	351	----
	0.21	0/45	----	----	----
Crude Petroleum-	16.8	20/45	260	----	----
Wilmington	1.7	3/45	282	----	----
	0.17	0/46	----	----	----
Benzo(a)pyrene	0.05	50/50	106	143	193
	0.005	44/46	232	358	----
	0.0005	0/50	----	----	----
2- Aminoanthracene	0.05	25/32	115	379	----
	0.005	0/49	----	----	----

[a] Number with tumors/number at risk
[b] Days to 50% tumor incidence
[c] Days to 100% tumor incidence

TABLE G-7. MOUSE SKIN-PAINTING INITIATION/PROMOTION STUDY(1)[a]

Sample	Number of mice with tumors lasting 30 days	Total Number of tumors lasting 30 days	Average Number of tumors/ tumor bearing mouse	Number of days to first mouse with tumor
S. Louisiana Crude[b]	5	7	1.4	71
Paraho Crude	9	17	1.9	59
Geokinetics Crude In Situ	2	2	1.0	92
Occidental Crude In Situ	0	0	0	0

[a]Days of promotion: 180

[b]29 surviving mice in group

TABLE G-8. GUINEA PIG SKIN SENSITIZATION TEST RESULTS FOR REFINED SHALE OIL PRODUCTS (6)

Fuel	Number Showing Response		Sensitization Potential	Mean Reaction Score (24 Hr.)	Sensitization Response
	24 Hr.	48 Hr.			
Petroleum JP-5	5	6	Moderate	70	Mild
Petroleum DFM	7	9	Moderate	71	Mild
Shale JP-5	2	4	Slight	50	Mild
Shale DFM	8	4	Moderate	46	Mild

G.1.3 GASOLINE

There appears to be no health or ecological effects testing being conducted on gasolines derived from shale oil.

G.1.4 RESIDUAL FUEL OIL

There appears to be no health or ecological effects testing being conducted on residual fuels produced from shale oil.

G.2 DIRECT COAL LIQUIDS

The available health effects tests results for the major products from three direct coal liquefaction processes, SRC II, H-coal, and Exxon Donor Solvent, are summarized in this section.

G.2.1 SRC II

The developers of the SRC II process anticipate marketing three major products: naphtha, light fuel oil, and heavy fuel oil (Reference 9). Researchers at Battelle Memorial Institute in Richland, Washington have conducted a battery of health effect tests on these three fractions. In addition, the EPA/DOE Fossil Fuels Research Materials Facility at the Oak Ridge National Laboratory has an SRC II fuel oil blend on which several researchers are currently conducting health and ecological effects tests (Reference 5). So far only limited test results are available.

G.2.1.1 Naphtha

Petroleum-derived naphtha poses its greatest hazard through vapor inhalation. Accidental or intentional ingestion of naphthas and volatile solvents also poses a major hazard. Skin contact generally results in reversible skin irritation (References 4, 7).

Table G-2 shows that the SRC II light distillate (naphtha) demonstrated no mutagenic activity in Ames testing (Reference 2). At another laboratory, a naphtha from South Louisiana crude petroleum was also found to be nonmutagenic when subjected to the Ames test (Reference 1). In cytoxicity tests conducted on cultured mammalian cells (VERO), a dose of 180 g/ml was required to produce a 50 percent reduction in relative plating efficiency (RPE). Thus, SRC II light distillate was one of the least cytotoxic fossil-derived materials tested (Table G-5) (Reference 2). Researchers at Battelle Memorial Institute are conducting skin-painting studies on mice (Reference 2). As shown in Table G-6, only one mouse in the medium- and high-dose groups exposed to light distillate had developed a grossly observed tumor at 456 days after initiation. No tumors had developed in the low-dose group. Thus, preliminary data from this study indicate that the tumorigenic activity of the light distillate is extremely low (Reference 2). Petroleum naphtha has also been shown to exhibit only very slight tumor initiating activity in mouse skin-painting studies (Reference 1).

Table G-9 presents the results of oral acute toxicity tests at LD_{50}, the orally administered dose (g/kg of body weight) required to kill 50 percent of the adult Wistar rats in three days. Subchronic toxicity was determined by administering the product once daily for five consecutive days. The difference between the acute and chronic LD_{50} values indicates that either the material or the effects of the light distillate are cumulative (Reference 2). On the basis of the acute LD_{50}, (2.3 g/kg), SRC II naphtha would be considered moderately toxic. Investigators also report that SRC II naphtha, unlike petroleum naphthas, shows some degree of acute toxicity through skin absorption at a fairly high dose level (1.6 g/kg body weight) (Reference 1).

A developmental toxicity study was conducted in which SRC II distillates were administered to pregnant rats. Such studies are conducted because the prenatal organism is often more sensitive to toxic compounds than are adults. Comparedd to the control group, the experimental group should no significant increase in the incidence of malformation of fetus for dams receiving the light distillate during the first 7 to 11 days of gestation. The frequency of prenatal mortality, however, was increased in dams receiving the light distillate during days 12 through 16 of the gestation period (Table G-9). The doses that were required to produce increases in prenatal mortality approach the doses that produce maternal toxicity effects. Thus, this test does not indicate a greatly enhanced sensitivity of the embryo or the fetus to SRC II light distillate (Reference 2).

TABLE G-9. COMPARISON OF THE ACUTE AND SUBCHRONIC TOXICITIES OF SRC MATERIALS IN THE FEMALE WISTAR RAT[1][a]

Material	Acute[b] LD_{50}	Subchronic LD_{50}[b]
Wash solvent (SRC I)	0.57 (1.66)[c]	(1.50)[c]
Light distillate (SRC II)	2.30	0.96
Process solvent (SRC I)	2.81	1.04
Light oil (SRC I)	2.90	2.41
Heavy distillate (SRC II)	2.98	1.19
Middle distillate (SRC II)	3.75	1.48
Shale Oil	9.22	---
Diesel oil	11.8	---
Crude petroleum	12	---

[a]The materials were administered one time by gavage for the acute toxicity studies. For the subchronic studies, materials were gavaged once daily for five consecutive days.

[b]LD_{50} is defined as the dose in grams per kilogram of body weight required to kill 50% of the animals. For the acute toxicity study, this value represents a single dose while for the subchronic studies, the value represents a daily dose.

[c]The LD_{50} values in parentheses are for materials diluted in corn oil. All other values are for undiluted material.

Very few directly comparable health effects tests exist for SRC-II and petroleum naphthas. Ames test and skin-painting studies indicate that the two naphthas are not significantly different in their mutagenic or tumorigenic activity. The SRC II naphtha, however, may present a more severe acute toxicity hazard when absorbed through the skin.

G.2.1.2 Light Fuel Oil

As is the case with naphtha, vapor inhalation is the most significant method of exposure to middle distillate petroleum products (e.g., No.2 fuel oil). The result may be dizziness, coma, collapse, or death. Exposure to high levels of vapors is generally followed by complete recovery, although permanent brain damage has been reported. Toxicity via ingestion is considered to be moderate, and contact with the skin typically causes reversible irritation (Reference 7). In general, the toxicity of middle distillate petroleum products is related to the content of benzene and other aromatic hydrocarbons.

In the Ames test, SRC II middle distillate demonstrated no measurable mutagenic activity (Table G-2). The Ames test was also conducted on four distillation fractions of a crude petroleum. The two middle fractions were designated "light gas oil" and "mid-gas oil". The light gas oil did not demonstrate mutagenic activity, but the mid-gas oil did (Reference 1). In separate testing, mutagenic activity toward Salmonella typhimurium was not observed when a No.2 fuel oil was tested with activation by rat or trout liver extract (Reference 8).

The mammalian cell cytotoxicity of the SRC II middle distillate is approximately the same as for the light distillate and the SRC II middle distillate is one of the least cytotoxic fossil-derived materials tested (Table G-4). The test data also indicate that SRC II middle distillate is slightly more toxic than the analogous petroleum-derived product, diesel oil No.2.

The acute toxicity of the SRC II middle distillate is greater than that of diesel oil; thus, it may pose a somewhat more severe ingestion hazard (Table G-9). In comparison with the LD_{50} of other industrial chemicals, the SRC II middle distillate would be considered moderately toxic while the petroleum-derived diesel oil would be considered slightly toxic. The differences in values for the acute LD_{50} (3.75 g/kg) and the subchronic LD_{50} (1.48 g/kg) indicate that either the material or the effects are cumulative (Reference 2). The SRC II middle distillate is reported to be capable of causing skin burns (Reference 9) and, thus, appears to be more acutely toxic when absorbed through the skin than petroleum-derived middle distillates.

In developmental toxicity tests, administration of the SRC II middle distillate during the first 7 to 11 days of gestation did not significantly increase the incidence of malformations. Fetal weight losses and prenatal mortalities were only observed at doses producing symptoms of maternal

toxicity. The frequency of prenatal mortality was increased when the test material was administered at 12 to 16 days of gestation (Table G-10). As was the case for SRC II light distillate, test results suggest that the risk for the fetus is only slightly greater than for the mother (Reference 2).

While more comparable test results exist for the middle distillates than for the light distillates, the data base is still small and the results must be considered preliminary. Neither SRC II middle distillate nor petroleum No.2 fuel oil appear to be mutagenic. The cytotoxicity of SRC II and petroleum middle distillates is similar, although the SRC II may be slightly more cytotoxic. The SRC II middle distillate also appears to be somewhat more acutely toxic when ingested and absorbed through the skin.

G.2.1.3 Heavy Distillate

Little information on the toxicity of petroleum-derived fuel oils is available, although some testing for carcinogenicity has been conducted. Testing indicates that residual fuels oils are carcinogenic to rabbit skin and mouse cervicovaginal epithelium (Reference 10). An "industrial fuel oil" (API Gravity 8.3) was found to be a relatively potent carcinogen in mouse skin painting studies (Reference 11). Tests conducted on several petroleum fractions indicate that the carcinogenic materials in petroleum are concentrated in the fractions boiling above 675-700°F (References 11, 6). Therefore, it is reasonable to expect some correlation between the carcinogenic potency of petroleum-derived fuel oils and the extent to which a fuel contains fractions boiling above 675 or 700°F.

The SRC II heavy distillate proved to be the most mutagenically active of the SRC II distillates when subjected to Ames testing (Table G-2). The heavy distillate was fractionated by a solvent extraction procedure into an acidic, basic, and neutral fraction as well as a basic and neutral tar fraction. The highest specific mutagenic activity (number of revertants per microgram of material) was found in the basic fraction although the basic and neutral tar fractions exhibited considerable activity as well. Because the tars constitute a larger portion of the mass of the heavy distillate, they contribute a larger share of the heavy distillate's total mutagenic activity than the basic fraction, despite the basic fraction's higher specific activity. Further chemical analysis and Ames testing identified several primary aromatic amines as the compounds responsible for the mutagenic activity, including aminonaphthalenes, aminoanthracenes, aminophenanthrene, aminopyrenes, and aminochrysenes (Reference 2).

In the mammalian cell cytotoxicity tests, SRC II heavy distillate was one of the most toxic fossil-derived materials tested (Table G-4). It also was one of the most active compounds in effecting cell transformations (Table G-5). SRC II heavy distillate was one of the most potent substances

TABLE G-10. MATERNAL AND FETAL TOXICITY IN RATS FOLLOWING DOSING WITH SRC II MATERIALS FROM 12 TO 16 DAYS OF EXPOSURE(2)

Agent	Dose[a] (g/kg/day)	Number Dosed[c]	Percent Dead[c]	Number Pregnant at 21 d.g.	Weight Gain to 21 d.g.[d]	Percent of Implants Resorbed[e]	Litters With Resorptions	Percent Malformed Fetuses[e,g]	Litters With Fetuses[g]	Fetal Weight at 21 d.g.[h]
Corn Oil	--	14	0	12	148 ± 31	1[i]	1	0	0	5.4 / 0.5
Aroclor[b]	0.11	13	0	10	101 ± 24	7	5	0	0	4.3 / 0.6
Light Distillate	0.28	11	9	8	116 ± 36	4	4	2	1	5.5 / 0.5
	0.56	12	8	9	101 37	23[f]	4	0	0	5.5 / 0.5
	0.84	14	43	7	113 ± 27	4[i]	3	1	1	5.4 / 0.5
	1.12	6	67	1	32 0	-	--	--	--	--
	1.41	7	86	1	50 ± 0	--	20	1	0	4.7 / 0.2
	1.69	5	80	1	112 ± 0	0	0	0	0	5.1 / 0.3
Middle Distillate	0.33	9	0	9	127 ± 43	5	5	3	1	5.8 / 0.6
	0.65	11	9	7	149 32	7	5	0	0	5.8 / 0.6
	0.98	9	11	8	118 ± 40	20[f]	5	0	0	5.1 / 0.4
	1.30	6	33	4	126 ± 19	0[f]	0	0	0	4.9 / 0.5
	1.63	6	67	2	94 ± 36	64[f]	2	0	0	4.5 / 0.4
	1.96	3	100	0	--	--	--	--	--	
Heavy Distillate	0.37	15	0	4	129 ± 31	9	7	1	2	5.3 / 0.5
	0.73	13	0	10	85 ± 23	66[f]	9	74	5	4.3 / 0.7
	1.10	12	17	9	76 ± 23	69[f]	9	60	6	4.3 / 0.5

[a]Administered by gavage once daily for five consecutive days; if undiluted, 0.1-1.2 ml given per 300 g body weight.

[b]Diluted in corn oil and 1 ml given per 300 g body weight.

[c]Includes both pregnant and nonpregnant adult females.

[d]Body weight gain between 0 and 21 days of gestation (d.g.); mean ± SD.

[e]Calculated on a per fetus rather than a per litter basis; includes resorbed and dead implants.

[f]One or more litters with all implants resorbed.

[g]Combination of soft itssue and skeletal malformations.

[h]Pooled means of each litter.

[i]One or more dams delivered prematurely; implant data incomplete and not included.

tested for epidermal carcinogenesis. The two rate groups given the highest dosages had a 100 percent tumor incidence rate (Reference 2). Microscopic examination revealed that 33 of the 39 mice with tumors had malignant tumors; 18 of the 39 had microscopic evidence of metastasis. Three mice had papillomas only (Reference 12).

Acute toxicity studies indicate that the LD_{50} value for the heavy distillate is approximately the same as those for the middle and light distillates (Table G-9) (Reference 2). Administration of heavy distillate to the experimental group at 7 to 11 days of gestation did not significantly increase the incidence of malformations over that of the control group. Fetal weight and prenatal mortality was only affected at doses producing maternal toxicity effects. More severe fetal effects were observed when the test material was administered at 12 to 16 days of gestation. The frequency of prenatal mortality was increased in the absence of signs of maternal toxicity. An increased incidence of malformations was also observed; however, this was accompanied by inhibited maternal weight gains. It appears that the risk for the fetus is only slightly greater than for the mother (Reference 2).

Skin-painting tests indicate that both petroleum-derived industrial fuel oils (Reference 10) and SRC II heavy distillate (Table G-6) pose considerable skin carcinogenicity hazards. The limited test results suggest that precautions should be taken to prevent human exposure to SRC II heavy distillate. Unfortunately, comparable tests have not been conducted on analogous petroleum products. Thus, an assessment of the relative hazards posed by the two products is not possible at this time.

G.2.2 H-COAL PRODUCTS

Naphtha and fuel oil are two major H-Coal products expected to enter the market; these two products are discussed in the following paragraphs. Although several researchers are currently conducting health and ecological effects tests, only limited results are available to date.

G.2.2.1 Naphtha

H-Coal naphtha can be produced either as a primary naphtha from the H-Coal syncrude operation or by hydrocracking heavier primary H-Coal products such as gas oil (Reference 13). Calkins et al (Reference 1) tested naphtha from the syncrude mode for mutagenicity and tumor-inducing potential. The coal-derived naphtha was found to be non-mutagenic (Ames test) as was a petroleum derived naphtha (Table G-11). No data is available on the mutagenicity of naphtha produced by hydrocracking heavier H-Coal products.

The primary H-Coal naphtha contains levels of sulfur, nitrogen, and oxygen that are high compared to petroleum-derived naphthas or naphtha produced by hydrocracking H-Coal gas oil (Reference 13). The phenols content (3.1 percent by volume) of primary H-Coal naphtha indicates that

TABLE G-11. SUMMARY: AMES TEST RESULTS FOR PETROLEUM AND H-COAL PRODUCTS[1]

Material	Test Results
South Louisiana Crude Petroleum	
Naphtha	Nonmutagenic
Light Gas Oil	Nonmutagenic
Mid-gas Oil	Mutagenic
Residue	Mutagenic
Crude Oil	Mutagenic
H-Coal Liquid Syncrude Mode	
Naphtha	Nonmutagenic
Light Gas Oil	Nonmutagenic
Atmospheric Still Overheads	Nonmutagenic
Atmospheric Still Bottoms	Mutagenic
Vacuum Still Overheads	Mutagenic

TABLE G-12. HEALTH EFFECTS TEST RESULTS FOR H-COAL FUEL OILS[15]

Tests	Hydrotreatment			
	Raw	Low	Med.	High
Mutagenicity (Ames)	High	High	High	No Response
Tumor Production	Medium	No Response	No Response	No Response
Cytotoxicity	Medium	Medium	Medium	Low

this would product pose a significant hazard if spilled into an aquatic environment. The phenolic content of most petroleum products is less than 1 percent (Reference 14).

Ames test results indicate that H-Coal naphtha and petroleum naphtha are both mutagenically inactive. Primary H-Coal naphtha's relatively high phenol content suggests that it is likely to be more toxic to aquatic organisms than petroleum naphthas. There is insufficient information available to compare the relative toxicities of the primary H-Coal naphtha, naphtha from hydrocracked H-Coal gas oil, and petroleum naphtha.

G.2.2.2 Fuel-Oil

Atmospheric still bottoms can be hydroprocessed into acceptable No.2 fuel oil blending stocks (Reference 13). Untreated atmospheric still bottoms exhibit mutagenic activity in Ames testing (Tables G-12 and G-13), but data on the mutagenicity of the hydrotreated H-Coal blending stocks is not available.

Health effects tests for middle distillates from H-Coal operated in the fuel oil mode have been conducted and are summarized in Table G-12. Comparable test results from petroleum middle distillates are not available.

G.2.3 EXXON DONOR SOLVENT

The major Exxon Donor Solvent products expected to enter the market include naphtha and fuel oil. Health effects tests are currently being conducted on EDS products but no results are yet available (Reference 1).

G.3 INDIRECT COAL LIQUIDS

The major indirect coal liquefaction products expected to be marketed include Fischer-Tropsch gasoline, Mobil-M Gasoline, and methanol motor fuels. Only two health effects tests have been conducted on a Fischer-Tropsch gasoline, and none have been conducted on Mobil-M gasoline. The effects of methanol have been studied for many years, and new risks would be attributable to exposure to a larger population because of the new use of methanol.

The toxic properties of petroleum gasoline are similar to those of naphthas and solvents. Vapors pose the most serious hazard. Exposure to extremely high levels may result in dizziness, coma, and collapse. Such exposures are usually followed by complete recovery, although permanent brain damage following massive exposure has been reported (Reference 16). High vapor levels may also act as a simple asphyxiant (Reference 7).

Gasoline can also cause irritation and other disturbances if it comes in to contact with the eyes. The acute toxicity by ingestion is considered to be moderate (Reference 7). Skin-painting studies revealed that gasoline was not carcinogenic to the skin of mice (Reference 11). In general, the

TABLE G-13. DISTRIBUTION OF MUTAGENIC ACTIVITY IN H-COAL[3]

ORNL Ref. No.	Sample	Total (Rev/mg)[a]	Mutagenic Activity Distribution (%)			
			Neutral	Acids	Bases	Other
1601	H-Coal Distillate (raw)	350	63	0	37	0
1602	HDT H-Coal Distillate (low severity)	540	100	0	0	0
1603	HDT H-Coal Distillate (medium severity)	210	100	--	--	--
1604	HDT H-Coal Distillate (high severity)	0	0	0	0	0
	H-Coal ASB (syn)	1,230	63	0	37	--
	H-Coal VSOH (syn)	4,100	76	0	24	--
	H-Coal VSB (syn)	2,200	25	0	60	--
	H-Coal ASOH (FO)	0	0	0	0	--
	H-Coal ASB (FO)	140	0	0	100	--
	H-Coal VSOH (FO)	4,100	74	0	26	--
	H-Coal VSB (FO)	6,000	13	0	85	--
	Composite Crude Oil	175	95	2	3	0
	Louisiana-Mississippi Sweet Crude Oil	75	100	0	0	0
	Wilmington Crude Oil	5	100	0	0	0
	Recluse Crude Oil	6	100	0	0	0

[a]Determined from the linear portion of a dose-response curve with strain TA-98

toxicity of gasoline is related to its content of benzene, a suspected human carcinogen (References 17, 18), and other aromatic hydrocarbons. Other additives, such as tetraethyl lead, could also alter the overall toxicity of gasoline (References 4, 7).

G.3.1 FISCHER-TROPSCH GASOLINE

Fischer-Tropsch (F-T) gasoline has been tested for its carcinogenic potential. Skin cancer was not induced by the application of F-T gasoline to the skin of mice or rabbits. Injection into the thigh of rats did, however, cause carcinomas attributable to the treatment in two of the 15 tested rats (Reference 19).

Examination of the chemical composition of F-T gasoline indicates the absence of N and S heterocyclic compounds and an aromatics content that is only slightly lower than in petroleum gasoline (see Appendix E, Section E.3.1). The induction of cancer in rats by injection indicates that F-T gasoline may pose a hazard by accidental parenteral introduction (e.g., through a cut in the skin). Similar testing has apparently not been conducted on petroleum gasoline. The similarity in chemical composition and the result of skin-painting studies indicate that the health effects from F-T and petroleum gasoline are not likely to be significantly different. No testing of F-T gasoline for ecological toxicity has apparently been conducted.

G.3.2 MOBIL-M GASOLINE

No health or ecological effects tests have been conducted on Mobil-M gasoline (Reference 20). The absence of heterocyclic compounds and the similarity between Mobil-M gasoline and petroleum gasolines in aromatics content provide no reason to believe that the two products will cause significantly different health or ecological effects (see Appendix E, Section E.3.2).

G.3.3 METHANOL

The use of methanol as a fuel would normally result in low and moderate exposure via inhalation and skin absorption of the people involved with the transportation and delivery of the fuel. Accidental exposures to high levels via inhalation and skin absorption could also be expected. Relatively few exposures via ingestion are anticipated.

Once methanol enters the body it is rapidly dispersed throughout the body. The effects of methanol include inebriation, vomiting, abdominal pain, visual disturbances, shortness of breath, delirium, unconsciousness, coma, and death (Reference 16). Individual susceptibility varies, but a dose lethal to humans is generally from two to eight ounces (Reference 4). Methanol is metabolized and excreted very slowly (Reference 16). This suggests that the effect of chronic low-level exposures may be cumulative

and produce eye and central nervous system damage equal to that which results from higher level acute exposures. The extent to which this occurs is not known (Reference 21).

G.4 HEALTH EFFECTS OF COAL GASES

Several laboratories are conducting toxicity studies on coal gases; however, very few results are yet available. Most of these studies are being sponsored by the U.S. Department of Energy. For example, the Argonne National Labortory is conducting toxicity studies on process streams from high-Btu coal gasification. The Morgantown Energy Technology Center and the Lovelace Inhalation Toxicology Research Institute are conducting toxicological evaluation of effluents and process streams from low-Btu gasifiers. The results of tests performed by Arthur D. Little, Inc. on low-Btu coal gas are available and are briefly summarized in the following paragraphs.

G.4.1 SNG

Examination of the chemical composition of SNG reveals three components with specific toxic effects: carbon monoxide, hydrogen sulfide, and metal carbonyls. The remaining components, methane, ethane, carbon dioxide, nitrogen, argon, and hydrogen, do not have specific toxic effects but can act as simple asphyxiants. Signs of asphyxia could result if their combined concentration is allowed to exceed 20 to 30 percent by volume in inspired air (Reference 22).

Carbon monoxide acts as a chemical asphyxiant. However, standards for pipeline gas generally require the CO content to be less than 1000 ppmv. It is anticipated that crude SNG would be sufficiently upgraded to meet this criteria. Concentrations of hydrogen sulfide, as low as 20 to 150 ppm, can act as an irritant to the eyes and respiratory tract (Reference 7). Prolonged exposure may result in pulmonary edema and higher concentration exposures can result in central nervous system depression and death (Reference 22). Considering the low concentration in a typical SNG (0.2 ppmv), hydrogen sulfide does not appear to pose a significant hazard.

The metal carbonyls that are potentially present in SNG include nickel tetracarbonyl, $Ni(CO)_4$, and iron pentacarbonyl, $Fe(CO)_5$, (Reference 23). Nickel carbonyl is an extremely toxic substance; a lethal exposure for humans is estimated to be 30 ppm for 30 minutes (Reference 24). Chronic exposure to nickel carbonyl has been implicated epidemiologically to cancer of the lungs and nose (Reference 22). It is also a recognized carcinogen in animals (Reference 25). Iron carbonyl is also highly toxic; however, it is less toxic than nickel carbonyl (Reference 7). The toxic effects of inhaling iron carbonyl include dizziness, nausea, difficult breathing, and possibly death (Reference 7).

No direct biological effects test results are available yet for SNG. Based on chemical composition, it does not appear that hydrogen sulfide levels will be high enough to pose a health hazard, and carbon monoxide

levels are not likely to exceed those in natural gas. It is possible that SNG will contain metal carbonyls; however, the extent to which they will actually be produced in commercial-scale plants is yet to be determined. Unless metal carbonyls are present, it does not appear that SNG will cause significantly different health effects than natural gas.

G.4.2 LOW-/MEDIUM-BTU COAL GAS

EPA studies have involved testing of particulates and resin extracts from low-Btu gas from a Wellman-Galusha gasifier (Reference 26) using liqnite. The particulates and extracts were obtained using the Source Assessment Sampling System (SASS) which consists of a series of impingers, filters, and resins for collecting of particulates and gaseouse impurities. The extracts were subjected to the Ames mutagenicity test, cyctotoxicity testing, and an acute toxicity test. No mutagenic activity was exhibited by the extracts, although they were extremely toxic to the tester strains and could only be tested at concentrations less than 10 µl/plate. In vitro toxicity test results using W1-38 human lung fibroblast cells indicated moderate cytotoxicity. Rats exhibited no signs of toxic or pharmacological effects when the extracts were orally administered. No mortality was recorded, indicating the oral LD_{50} for each test substance is greater than 10g/kg (Reference 26).

G.5 SYNTHETIC FUEL COMBUSTION PRODUCTS

Mutagenicity and cytotoxicity tests conducted on SASS train extracts of sampled test burn flue gas are the only health effects test results available on the combustion products of synthetic fuels. The gas being combusted was from a low-Btu Wellman-Galusha gasifier using lignite. No mutagenic activity nor cytotoxicity was exhibited by the extracts (Reference 26). Mutagenicity tests on shale-derived DFM (diesel fuel marine) are currently being conducted (Reference 5).

REFERENCES

1. Calkins, W.H., Deye, J.F., King, C.F., Hartgrove, and D.F. Krahn. Synthetic Crude Oils. Carcinogenicity Screening Tests, C004758-2, Department of Energy, Washington, D.C. , 1979.

2. Battelle Pacific Northwest Laboratory. "Biomedical Studies on Solvent Refined Coal (SRC II) Liquefaction Materials: A Status Report." U.S. Department of Energy Contract EY-76-C-06-1830, PNL-3189, October 1979.

3. Rao, T.K. and J.L. Epler. Second Symposium, "In Vitro Toxicity of Environmental Comples Mixtures," Williamsburg, Va. March, 1980.

4. Gleason, M.N., et al. Clinical Toxicology of Commercial Products, Third Edition. The Williams and Wilkins Company, 1969.

5. Griest, W.H., D.L. Coffin, and M.R. Guerin. "Fossil Fuels Research Matrix Program." ORNL/TM-7346 June 1980.

6. U.S. Navy, Information provided to D.D. Evans of TRW, March 1980.

7. Sax, N.I. Dangerous Properties of Industrial Materials, Fourth edition. Reinhold Publishing Company, 1975.

8. Payne, J.F., I. Martins and A. Rahimtula. "Crankcase Oils: Are They a Major Mutagenic Burden in the Aquatic Environment?" Science, 200: 329-30, 1978.

9. Pittsburg and Midway Coal Mining Co. "Demonstration Plant Marketing Plan. SRC II Demonstration Project." Prepared for U.S. Department of Energy. FE-3055-T13, July 31, 1979.

10. Bingham, E., R.P. Trosset, and D. Warshawsky. "Carcinogenic Potential of Petroleum Hydrocarbons, A Critical Review of the Literature." Journal of Environmental Pathology and Toxicology, 3: 483-563, 1980.

11. Kettering Laboratory. "Investigation of the Potential Hazards of Cancer of the Skin Associated with the Refining of Petroleum. Final Report." API Research Project MC-1, October 20, 1959.

12. Battelle Pacific Northwest Laboratory. "Appendix to Biomedical Studies on Solvent Refined Coal (SRC II) Liquefaction Materials: A Status Report." PNL-3189-Appendix, December, 1979.

13. Gim, Tan and A.J. de Rosset. "Hydrocracking of H-Coal Process Derived Gas Oils," Upgrading of Coal Liquids: Interim Report. FE-256623, November 1978.

14. Giddings, J.M., B.R. Parkhurst, C.W. Gehrs, and R.E. Millemann. "Toxicity of a Coal Liquefaction Product to Aquatic Organisms." Bull. Environmental Contam. Toxicology, 25, 1-6 (1980).

15. Kolber, A.R., R.S. DeWaskin, and D.R. Greenwood. "Toxicological Studies on Coal-Derived Synthetic Fuels Products and By products." Prepared for U.S. Environmental Protection Agency, Industrial Environmental Research Laboratory by Research Triangle Institute,. Research Triangle Park, North Carolina. August 1980.

16. Cornish, H.J. "Solvents and Vapors," Toxicology, The Basic Science of Poisons. First Edition, L.J. Casarett and J. Doull, Eds., MacMillan Publishing Co., Inc. New York 1976.

17. Carcinogen Assessment Group's (CAG) List of Carcinogens. U.S. Envirohmental Protection Agency, July 14, 1980.

18. International Agency for Research on Cancer, IARC Monographs on the Evaluation of Carcinogenic Risk of Chemicals to Man, WHO Publications Center, Albany, New York, Volume 7, p. 203 1974.

19. Hueper, W.C. Experimental Carcinogenic Studies on Hydrogenated Coal Oils II; Fischer-Tropsch Oils, Industrial Medicine and Surgery. October 1956. pp.459-462.

20. Mobil Research and Development Corporation, Telephone conversation with Max Schreiner and Dr. Woo Young Lee July 28, 1980.

21. Timourian, H. and F. Milanovich. "Methanol As A Transportation Fuel: Assessment of Environmental and Health Research." UCRL52697, Prepared by Lawrence Livermore Laboratory Linden U.S. Department of Energy Contract Number W-7405-ENG-48. June 18, 1979.

22. Casarett, L.J. "Toxicology of the Respiratory System," Toxicology, The Basic Science of Poisons, First Edition. L.J. Cararett and J. Doull, Eds. MacMillan Publishing Co., Inc. New York, 1976.

23. C.F. Braun and Company. "Carbonyl Formation in Coal Gasification Plants." Prepared for Energy Research and Development Administration and American Gas Association, FE-2240-16, December 1974.

24. American Industrial Hygiene Association: Nickel Carbonyl.

25. International Agency for Research on Cancer. IARC Monographs on the Evaluation of Carcinogenic Risk of Chemicals to Man. WHO Publications Center, Albany, New York, Volume II, p. 75, 1976.

26. Kilpatrick, M.P., et al. "Environmental Assessment: Source Test and Evaluation Report, Wellman-Galusha (Ft.Snelling) Low-Btu Gasification." EPA-600/7-80-097, U.S. Environmental Protection Agency, Washington D.C., May 1980.

27. Pittsburgh and Midway Coal Mining Company. Response to Public Hearings on SRC-II Demonstration Plant, Correspondence from Pittsburgh and Midway to U.S. DOE, August 1980.

TECHNICAL REPORT DATA
(Please read Instructions on the reverse before completing)

1. REPORT NO.	2.	3. RECIPIENT'S ACCESSION NO.
EPA-600/7-81-025		

4. TITLE AND SUBTITLE	5. REPORT DATE
Environmental Aspects of Synfuel Utilization	March 1981
	6. PERFORMING ORGANIZATION CODE

7. AUTHOR(S)	8. PERFORMING ORGANIZATION REPORT NO.
M. Ghassemi and R.S. Iyer	

9. PERFORMING ORGANIZATION NAME AND ADDRESS	10. PROGRAM ELEMENT NO.
TRW, Inc. One Space Park Redondo Beach, California 90278	CCZN1A
	11. CONTRACT/GRANT NO. 68-02-3174, W.A. 18

12. SPONSORING AGENCY NAME AND ADDRESS	13. TYPE OF REPORT AND PERIOD COVERED
EPA, Office of Research and Development Industrial Environmental Research Laboratory Research Triangle Park, NC 27711	Task Final; 3/80-2/81
	14. SPONSORING AGENCY CODE EPA/600/13

15. SUPPLEMENTARY NOTES IERL-RTP project officer is Joseph A. McSorley, Mail Drop 61, 919/541-2827.

16. ABSTRACT The report gives results of a review of the environmental concerns relating to the distribution, handling, and end use of synfuel products likely to enter the marketplace by the year 2000, and assigns priority rankings to products from the standpoint of environmental concerns. The report: reviews available data on the physical, chemical, and health effects characteristics of synfuel products and the environmental significance of such characteristics; analyzes the potential environmental impacts and regional implications associated with the production and end use; and ranks the products from the standpoint of environmental concerns and mitigation requirements. Review results indicate that: (a) wide-scale transportation, distribution, and end use of certain synfuel products can present significant threats to the environment and the public health; (b) based on gross characteristics, synfuel products appear to be similar to petroleum products, but detailed characterization data are not available to judge their relative safety; and (c) synfuel test and evaluation programs currently underway or planned provide excellent opportunities for the collection of some of the required environmental data.

17. KEY WORDS AND DOCUMENT ANALYSIS

a. DESCRIPTORS	b. IDENTIFIERS/OPEN ENDED TERMS	c. COSATI Field/Group
Pollution	Pollution Control	13B
Assessments	Stationary Sources	14B
Coal	Synfuels	08G
Liquefaction	Environmental Impacts	07D
Coal Gasification		13H
Shale Oil		

18. DISTRIBUTION STATEMENT	19. SECURITY CLASS *(This Report)*	21. NO OF PAGES
Release to Public	Unclassified	402
	20. SECURITY CLASS *(This page)*	22. PRICE
	Unclassified	

EPA Form 2220-1 (9-73)