EPA-450/2-77-012

CONTROL TECHNIQUES FOR LEAD AIR EMISSIONS VOLUME II: CHAPTER 4 - APPENDIX B

UNITED STATES ENVIRONMENTAL PROTECTION AGENCY
Office of Air Quality Planning and Standards
Emission Standards and Engineering Division
Research Triangle Park, North Carolina 27711
Telephone: (919) 541-5271

EPA-450/2-77-012

CONTROL TECHNIQUES FOR LEAD AIR EMISSIONS

VOLUME II: CHAPTER 4 - APPENDIX B

U.S. ENVIRONMENTAL PROTECTION AGENCY
Office of Air and Waste Management
Office of Air Quality Planning and Standards
Research Triangle Park, North Carolina 27711

December 1977

NATIONAL AIR POLLUTION CONTROL TECHNIQUES ADVISORY COMMITTEE

Chairman and Executive Secretary

Mr. Don R. Goodwin, Director
Emission Standards and Engineering Division
Office of Air Quality Planning and Standards
U.S. Environmental Protection Agency
Research Triangle Park, North Carolina 27711

Committee Members

Dr. Lucile F. Adamson
1344 Ingraham Street, N.W.
Washington, D.C. 20011
(Howard University-Professor,
School of Human Ecology)

Mr. O.B. Burns, Jr., Director
Corporate Environmental Activities
Westvaco Corporation
Westvaco Building, 299 Park Ave.
New York, New York 10017

Mr. Donald C. Francois, Asst. Dir.
Div. of Natural Resources Management
Dept. of Conservation and Cultural Affairs
P.O. Box 578
St. Thomas, Virgin Islands 00801

Dr. Waldron H. Giles, Manager
Advanced Material and Space Systems Engineering
General Electric Company
Re-entry and Environmental Systems Div.
3198 Chestnut St., Room 6839B
Philadelphia, Pennsylvania 19101

Mr. James K. Hambright, Dir.
Dept. of Environmental Resources
Bureau of Air Quality and Noise Control
P.O. Box 2063
Harrisburg, Pennsylvania 17120

Mr. W.C. Holbrook, Manager
Environmental and Energy Affairs
B.F. Goodrich Chemical Co.
6100 Oak Tree Blvd.
Cleveland, Ohio 44131

Mr. Lee E. Jager, Chief
Air Pollution Control Div.
Michigan Dept. of Natural Resources
Stevens T. Mason Bldg. (8th floor)
Lansing, Michigan 48926

Dr. Joseph T. Ling, Vice Pres.
Environmental Engineering and Pollution Control
3M Company
Minnesota Mining and Manufacturing Co.
Box 33331, Bldg. 42-5W
St. Paul, Minnesota 55133

Mr. Marcus R. McCraven
Asst. Vice Pres. of Environmental Engineering
United Illuminating Co.
80 Temple St.
New Haven, Connecticut 06506

Mrs. Patricia F. McGuire
161 White Oak Dr.
Pittsburgh, Pennsylvania 15237
(Member of the Allegheny Co. Board of Health, Pennsylvania)

Dr. William J. Moroz
Prof. of Mechanical Engineering
Center for Air Environment Studies
226 Chemical Engineering, Bldg. II
Pennsylvania State University
University Park, Pennsylvania 16802

Mr. Hugh Mullen, Director of Government and Industry Relations
I.U. Conversion Systems, Inc.
3624 Market St.
Philadelphia, Pennsylvania 19104

Mr. C. William Simmons
Air Pollution Control Officer
San Diego Air Pollution Control
District
9150 Cheasapeake Dr.
San Diego, California 92123

Mr. E. Bill Stewart, Dept. Dir.
Control and Prevention
Texas Air Control Board
8520 Shoal Creek Blvd.
Austin, Texas 78758

Mr. Victor H. Sussman, Dir.
Stationary Source Environmental
Control Office
Ford Motor Co.
Parklane Towers West, Suite 628
P.O. Box 54
Dearborn, Michigan 48126

TABLE OF CONTENTS

	Page
SUMMARY	xix
1.0 INTRODUCTION	1-1
2.0 BACKGROUND INFORMATION	2-1
2.1 Definitions	2-1
2.2 Origin and Use of Lead	2-4
2.3 Types of Lead Emissions	2-5
2.4 Sampling and Analytical Methods	2-9
2.5 Sources of Lead Emissions	2-10
2.6 Control Devices	2-12
2.7 Fugitive Lead Emissions	2-34
2.8 Control Costs	2-36
2.9 Emission Estimates and Emission Factors	2-42
2.10 Emission Trends and Projections	2-44
2.11 Anticipated Impacts	2-52
2.12 Emergency Episode Procedures	2-58
2.13 References	2-59
3.0 COMBUSTION SOURCES	3-1
3.1 Leaded Gasoline	3-1
3.2 Coal, Oil, Waste Oil, and Solid Waste	3-76

TABLE OF CONTENTS (continued).

		Page
4.0	INDUSTRIAL PROCESS SOURCES	4-1
4.1	Lead Alkyl Manufacture	4-1
4.2	Storage Battery Manufacture	4-23
4.3	Primary Nonferrous Metals Production	4-38
4.4	Secondary Nonferrous Metals and Alloy Production	4-131
4.5	Ferrous Metals and Alloy Production	4-173
4.6	Lead Oxides and Pigments	4-278
4.7	Pesticides	4-291
4.8	Lead Handling Operations	4-292
4.9	Miscellaneous Sources of Lead	
APPENDIX A		A-1
APPENDIX B		B-1

LIST OF FIGURES

		Page
2-1	Approximate Flow of Lead Through U. S. Industry in 1975	2-8
2-2	Map of the Major Lead Emission Sources	2-13
2-3	Criteria for Selection of Gas Cleaning Devices	2-19
2-4	Fabric Filter with Mechanical Shaker	2-21
2-5	Envelope Type Fabric Filter with Automatic Reverse-Air Cleaning Mechanism	2-21
2-6	Reverse-Jet Fabric Filter	2-22
2-7	Orifice Scrubber	2-26
2-8	Orifice Scrubber	2-27
2-9	Mechanical Scrubber	2-27
2-10	Mechanical-Centrifugal Scrubber	2-28
2-11	Centrifugal-Impingement Scrubber	2-31
2-12	Venturi Scrubber Design and Operation	2-32
2-13	Major Design Features of a Common ESP	2-35
2-14	Factors Influencing Capital and Annual Costs of Operating Air Pollution Control System	2-39
3-1	Octane Number Versus Lead Content for Gasolines	3-9
3-2	Yearly Trends of United States Passenger Car Engine Design and Gasoline Quality	3-14
3-3	Historical Source of Octane Quality Commercial Gasolines	3-15
3-4	Percent of Model Year Cars and of all Cars on the Road for Which Premium Gasoline is Recommended, and Percent Premium Sales, 1965-1976	3-17
3-5	United States Gasoline Demand - 1960-1975	3-18
3-6	Vapor Pressure of Lead Compounds	3-32

		Page
3-7	Predicted Reduction in Lead Use in Gasoline From Estimated 1974 Level Based on Federal Fuel Additive Regulations and Gasoline Use Increases of 0 and 5 Percent Per Year	3-40
3-8	Projected Lead Reduction from 1974 Level Resulting From the Use of Nonleaded Fuel in 1975 and Later Model Year Automobiles. Curves C-D are for Resumption of Use of Leaded Fuel at 1974 Concentration for all 1980 and Later Model Years	3-42
3-9	DuPont Muffler Lead Trap	3-48
3-10	Ethyl Corporation Tangential Anchored Vortex Traps Construction Features	3-50
3-11	PPG Particulate Lead Trapping System Features	3-52
3-12	Spreader and Vibrating Grate Stokers	3-78
3-13	Pulverized-Coal Unit	3-79
3-14	Diagram of Coal-Fired Boiler Equipped with an ESP	3-86
3-15	Total Capital and Annualized Costs for ESP's on Coal-Fired Boilers	3-89
3-16	An Oil Front-Fired Power Plant Steam Generator	3-93
3-17	ESP Installation of a Municipal Incinerator Showing Gas Conditioning System	3-99
3-18	Capital Costs for Various Types of Control Devices for Municipal Incinerators	3-109
3-19	Annualized Costs for Various Control Devices on Municipal Incinerators	3-110
4-1	Sodium-Lead Alloy Process for the Production of Tetraethyl Lead	4-3
4-2	Typical Lead Reverberatory Furnace Used in Lead Additive Manufacturing	4-7

LIST OF FIGURES (continued)

		Page
4-3	Electrolytic Process for Tetramethyl Lead Production	4-12
4-4	Flow Diagram of Lead Acid Battery Plant	4-24
4-5	Average Controlled Lead Emissions From Tested Facilities	4-33
4-6	A Typical Ore Mining and Processing Operation	4-41
4-7	Flow Diagram of Primary Lead Smelter	4-45
4-8	Lead Updraft Sintering Machine	4-46
4-9	Lead Blast Furnace	4-49
4-10	Process Flow Diagram For Primary Lead Smelting Showing Potential Industrial Process Fugitive Particulate Emission Points	4-57
4-11	Sulfuric Acid Plant Installed on a Primary Lead Smelter	4-60
4-12	Flow Diagram of Primary Zinc Production	4-73
4-13	Downdraft Sinter Machine	4-76
4-14	Horizontal Retort	4-76
4-15	Vertical Retort	4-80
4-16	Process Flow Diagram For Primary Zinc Production Showing Potential Industrial Process Fugitive Emission Points	4-84
4-17	Primary Copper Smelter Flow Diagram	4-96
4-18	Multiple-Hearth Roaster	4-98
4-19	Fluid-Bed Roaster	4-99
4-20	Reverberatory Furnace	4-103
4-21	Electric Smelting Furnace	4-104
4-22	Copper Converter	4-108

LIST OF FIGURES (continued)

		Page
4-23	Process Flow Diagram for Primary Copper Smelting Showing Potential Industrial Process Fugitive Emission Points	4-113
4-24	Blast Furnace With Typical Air Pollution Control System	4-132
4-25	Reverberatory Furnace with a Typical Emission Control System	4-133
4-26	Pot Furnaces with Typical Emission Control System	4-134
4-27	Process Flow Diagram for Secondary Lead Smelting Showing Potential Industrial Process Fugitive Particulate Emission Points	4-138
4-28	Process Flow Sketch of Brass/Bronze Reverberatory Furnace	4-152
4-29	Brass Reverberatory Furnace	4-154
4-30	Gas-Fired Rotary Brass Melting Furnace	4-155
4-31	Process Flow Diagram for Secondary Brass and Bronze (Copper Alloy) Production Showing Potential Industrial Process Fugitive Particulate Emission Points	4-161
4-32	Production Flow Diagram for a Typical Gray Iron Foundry	4-174
4-33	Cross-Section of a Cupola Furnace for Gray Iron Production	4-175
4-34	Process Flow Diagram for Foundries Showing Potential Industrial Process Fugitive Particulate Emission Points	4-184
4-35	Method of Capturing Exhaust Gases From Cupola Operations	4-189
4-36	Fabric Filter Control System on a Gray Iron Cupola	4-190
4-37	Particulate Emissions as a Function of Venturi Orifice Pressure Drop	4-195

		Page
4-38	Venturi Gas Scrubbing System Installed on a Foundry Cupola	4-196
4-39	Flow Diagram Depicting the Principal Units and Auxiliaries in Modern Blast-Furnace Plant	4-203
4-40	Idealized Cross-Section of a Typical Modern Blast-Furnace Plant	4-205
4-41	Diagram which Illustrates the Principal Parts of an Open-Hearth Furnace	4-207
4-42	Diagrammatic Section Along the Length of a Liquid-Fuel Fired Open-Hearth Furnace	4-208
4-43	Schematic Elevation Showing the Principal Operating Units of the Basic Oxygen Process Steelmaking Shop	4-210
4-44	Schematic Cross-Section of a Heroult Electric Arc Furnace	4-212
4-45	Process Flow Diagram for Iron Production Showing Potential Industrial Process Fugitive Particulate Emission Points	4-222
4-46	Ferroalloy Production Flow Diagram	4-256
4-47	Submerged-Arc Furnace for Ferroalloy Production	4-257
4-48	Ball Mill Process for Lead Oxide Manufacture	4-280
4-49	Barton Pot Process for Lead Oxide Manufacture	4-280
4-50	Flow Diagram for Type Metal Processes	4-293
4-51	Cross-Section of a Hydraulic Extrusion Press	4-300
4-52	Screw-Type Extrusion Press	4-300
4-53	Sources of Particulate Emissions in Cement Plant	4-307
4-54	A Typical Rotary Cement Kiln and Clinker Cooling System with Fabric Filter	4-308
4-55	Regenerative Glass Furnace	4-318
B-1	Control system diagram for brass and bronze Reverberatory Furnace	B-11

LIST OF TABLES

		Page
1	National Atmospheric Lead Emissions in 1975	xx
2	Lead Control Techniques	xxv
3	Performance of Lead Emission Controls	xxvi
2-1	Origins of Lead in United States	2-6
2-2	United States Consumption of Lead By Industry	2-7
2-3	Composition - Lead Air Emissions	2-11
2-4	Lead Particulate Size Distribution	2-14
2-5	Lead Control Techniques and Performances	2-15
2-6	Comparative Control Efficiencies for Lead and Total Particulate	2-16
2-7	Fugitive Lead Emissions	2-37
2-8	Lead Emission Factors, Annual Emissions, and Control Techniques	2-45
2-9	Relative Contribution of Lead Emissions From All Sources	2-50
3-1	Operating Conditions for Determining Octane Numbers of Fuels	3-2
3-2	ASTM Rating Scale for Automotive Fuels Above 100 Octane	3-10
3-3	Lead Consumption in U.S. Manufacture of Lead Alkyl Gasoline Additives	3-19
3-4	Lead Particle Size Distribution From Vehicles With Conventional Mufflers	3-24
3-5	Distribution of Particle Sizes in Exhaust at 260°F From Leaded and Unleaded Fuel	3-25
3-6	Lead Particle Size Distributions for Three Production Vehicles	3-28
3-7	Melting Points of Selected Lead Compounds	3-33
3-8	Composition of Lead Deposits From A Lead Trap	3-34

LIST OF TABLES (continued)

		Page
3-9	Amended Fuel Additive Regulations as of September 28, 1976	3-38
3-10	Comparison of Properties of CNG, LNG, and Gasoline	3-45
3-11	Estimated Sales-Weighted Fuel Economy For American-Made Automobiles	3-60
3-12	Estimated Costs of DuPont Production Prototype Lead Traps	3-65
3-13	Estimated Costs for Ethyl Tangential Anchored Vortex Trap Based on 57.0 Mm (36,000-mi) Muffler Life, 1973	3-67
3-14	Characteristics of Uncontrolled Exhaust Gas From Pulverized-Coal-Fired Utility Boiler	3-81
3-15	Characteristics of Uncontrolled Exhaust Gas From Cyclone Coal-Fired Boiler	3-82
3-16	Example Flue Gas and Precipitator Collection Efficiency Data	3-87
3-17	Characteristics of Uncontrolled Exhaust Gas From Oil-Fired Boilers	3-95
3-18	Characteristics of Uncontrolled Exhaust Gas From Municipal Incinerators	3-101
3-19	Design Parameters for Electrostatic Precipitators on Incinerators	3-105
3-20	Characteristics of Uncontrolled Exhaust Gas From Medium and Large Waste Oil-Fired Boilers	3-116
4-1	Typical Exhaust Parameters for Battery Manufacturing Operations	4-29
4-2	Lead Control Techniques and Associated Costs for Lead-Acid Battery Plants	4-32
4-3	Lead Removal Efficiency for Well-Controlled Processes	4-34

		Page
4-4	Lead Emissions from Ore Grinding and Crushing Operations	4-39
4-5	Characteristics of Uncontrolled Exhaust Gas from Lead Sinter Machine	4-48
4-6	Characteristics of Uncontrolled, Undiluted Exhaust Gas From a Lead Blast Furnace	4-51
4-7	Characteritics of Uncontrolled Exhaust Gas From a Lead Dross Reverberatory	4-54
4-8	Estimates of Fugitive Dust Emissions From Operations at one Primary Lead Smelter	4-55
4-8a	Estimates of Fugitive Dust Emissions From Operations at Two Primary Lead Smelters	4-56
4-9	Particle Size Distribution of Flue Dust from Updraft Primary Lead Sintering Machine	4-58
4-10	Performance of Blast Furnace and Dross Reverberatory Furnace Baghouse	4-66
4-11	Characteristics of Uncontrolled Exhaust Gas From a Zinc Sinter Machine	4-77
4-12	Lead Emissions at Zinc Sinter Machines	4-78
4-13	Characteristics of Uncontrolled Exhaust Gas From Horizontal Zinc Retorts	4-81
4-14	Characteristics of Uncontrolled Exhaust Gas From A Vertical Zinc Retort	4-83
4-15	Lead Emissions - Zinc Retorts	4-85
4-16	Fugitive Lead Emission Sources and Estimated Uncontrolled Particulate Emission Factors	4-86
4-17	Characteristics of Uncontrolled Exhaust Gas From A Copper Roaster	4-101
4-18	Characteristics of Uncontrolled Exhaust Gas From a Copper Reverberatory Furnace	4-106
4-19	Characteristics of Uncontrolled Exhaust Gas From a Copper Converter	4-110

LIST OF TABLES (continued)

		Page
4-20	Uncontrolled Fugitive Emissions From Copper Smelting Operations	4-112
4-21	Chemical Characteristics of Fugitive Particulate Emissions From Various Process Steps in Primary Copper Smelting	4-114
4-22	ESP Performance on Copper Reverberatory Furnace and Roaster Combined Exhaust Gas Streams	4-118
4-23	ESP Performance on Two Copper Converter Operations	4-119
4-24	Characteristics of Uncontrolled Exhaust Gas for Secondary Lead Blast Furnace	4-136
4-25	Uncontrolled Exhaust Gas Characteristics for Secondary Lead Reverberatory Furnace	4-137
4-26	Secondary Lead Fugitive Dust Sources and Emissions	4-137
4-27	Performance of a Fabric Filter on a Secondary Lead Reverberatory Furnace	4-143
4-28	Particulate Emissions From Brass and Bronze Ingot Production	4-158
4-29	Characteristics of Uncontrolled Exhaust Gas From A Brass and Bronze Reverberatory Furnace	4-159
4-30	Lead Emissions From Brass and Bronze Production in 1974	4-163
4-31	Particulate Emissions From a Brass and Bronze Reverberatory Furnace	4-165
4-32	Characteristics of Typical Exhaust Gas From Gray Iron Melting Furnaces	4-181
4-33	Lead Emission Factors and Annual Lead Emissions for the Gray Iron Foundry Industry	4-183
4-34	Emission Characteristics for Various Foundry Operations	4-186

		Page
4-35	Dust and Fume Emissions From Gray Iron Cupolas	4-187
4-36	Fabric Filter Performance Test Results on a Gray Iron Electric Arc Furnace	4-192
4-37	Production for Iron and Steel Industry in 1975	4-200
4-38	Characteristics of Uncontrolled Exhaust Gas From Sintering Machines	4-214
4-39	Characteristics of Uncontrolled Exhaust Gas From Iron Blast Furnaces	4-217
4-40	Characteristics of Uncontrolled Exhaust Gas From Open-Hearth Steel Furnaces	4-219
4-41	Characteristics of Uncontrolled Exhaust Gas From Basic Oxygen Furnaces	4-224
4-42	Characteristics of Uncontrolled Exhaust Gas From Electric Arc Furnaces	4-225
4-43	Summary of Performance Test Results on a Fabric Filter Serving Sinter Plant	4-229
4-44	Performance of an Electrostatic Precipitator Serving an Open-Hearth Furnace	4-234
4-45	Summary of Performance Test Results on a Venturi Scrubbing System Serving a Basic Oxygen Furnace	4-235
4-46	Performance of Fabric Filter Serving an Electric-Arc Furnace	4-238
4-47	U. S. Ferroalloy Production in 1975	4-254
4-48	Characteristics of Exhaust Gas From Open Electric Furnaces Processing Common Ferroalloys	4-261
4-49	Lead Emissions From Ferroalloy Production	4-266
4-50	Test Results on an Electric Arc Furnace Equipped With Fabric Filter	4-269

LIST OF TABLES (continued)

		Page
4-51	Characteristics of Uncontrolled Exhaust Gas From Lead Oxide Ball Mill and Barton Pot Processes	4-284
4-52	Performance Test Results on Fabric Filter Systems	4-287
4-53	Characteristics of Uncontrolled Exhaust Gas From Portland Cement Kiln	4-311
A-1	Prefixes for the SI System of Measurement	A-2
A-2	Conversion Factors	A-4
B-1	Steps To Determine Total Equipment Costs	B-2
B-2	Capital Cost Bases	B-3
B-3	Annualized Cost Bases	B-4
B-4	Retrofit Factors	B-5
B-5	Characteristics of Uncontrolled Exhaust Gas From a Brass and Bronze Reverberatory Furnace	B-10
B-6	Determination of Capital Costs for Particulate Control System for a Brass and Bronze Reverberatory Furnace	B-12
B-7	Control System Annual Operating Cost	B-13

SUMMARY

This report documents atmospheric emissions of lead (Pb) and its compounds from various sources, methods for controlling these emissions, and approximate costs for implementing these control methods. Estimates of energy and environmental impacts are given for specific model plants.

Lead and its compounds enter the atmosphere from combustion of fuels, especially leaded gasoline, and from industrial activities. Rural ambient air levels are commonly below 0.5 $\mu g/m^3$ whereas urban air lead levels are mainly 1 to 2 $\mu g/m^3$. In highly populated areas daily averages may exceed 3 to 5 $\mu g/m^3$ and in dense traffic, lead levels have been known to exceed 20 $\mu g/m^3$ for several hours. Near large stationary sources, levels have exceeded 300 $\mu g/m^3$.[1]

In 1975, atmospheric emissions of lead in the United States amounted to 141 Gg (155,900 tons),* of which 90.4 percent was contributed by gasoline combustion. These emissions are summarized by source in Table 1.

---

* The Appendix presents common conversion factors for International and English systems of measurements.

Table 1. NATIONAL ATMOSPHERIC LEAD EMISSIONS IN 1975

	Megagrams	Tons
Gasoline combustion	127,800	140,900
Coal combustion	228	257
Oil combustion	100	110
Solid waste incineration	1,170	1,296
Waste oil disposal	5,000	5,480
Lead alkyl production	1,000	1,100
Storage battery production	82	90
Ore crushing and grinding	493	544
Primary lead smelting	400	440
Primary copper smelting	1,314	1,444
Primary zinc smelting	112	124
Secondary lead smelting	750	830
Brass and bronze production	47	52
Gray iron production	1,080	1,192
Ferroalloy production	30	33
Iron and steel production	605	667
Lead oxide production	100	110
Pigment production	12	13
Cable covering	113	125
Can soldering	63	70
Type metal	435	480
Metallic lead products	77	85
Cement production	312	344
Lead glass production	56	62
Total	141,380	155,880

SOURCES OF LEAD AIR EMISSIONS

Lead emission sources can be categorized into three groups: 1) combustion sources, which emit lead by volatilization of lead components contained in the fuel or in refuse; 2) metallurgical sources, which generate lead emissions by volatilization or mechanical action from melting and processing of metallic ores and materials; and 3) manufacturing sources, which generate lead emissions by using refined lead as the raw material to produce a lead-containing product. All sources listed in Table 1 are considered in this study.

The nature of lead emissions depends on their origin and on the mechanism of formation. High-temperature combustion and smelting processes generate submicron particulate lead fumes. Lead emissions from material handling and mechanical attrition, as in battery manufacturing, consist of larger-sized dust particles. The main chemical forms of lead emissions include elemental lead (Pb), oxides of lead (PbO, PbO_2, Pb_2O_3, etc.), lead sulfates and sulfides ($PbSO_4$, PbS, etc.), alkyl lead ($Pb(CH_3)_4$, $Pb(C_2H_5)_4$), and lead halides.

EMISSION FACTORS

Emission factors for lead were developed for each source category; they are based on source tests, particulate chemical analyses in the literature, industry responses,

material balances, and engineering judgment. Because data in the literature are limited, most of the emission factors should be regarded as approximations; they do provide guidelines for estimating emissions from large groups of sources. In many processes, lead emissions are a function of the lead content of the charge or raw materials, for which data are highly variable and sparse. In addition, the efficiency of common particulate control devices with respect to lead particulates is not well documented.

NATIONAL EMISSION INVENTORY

Annual emissions from each source category are determined by use of (1) the uncontrolled emission factor, (2) the 1975 production output or consumption, and (3) an overall average emission control factor for each source. Production and consumption rates are fairly reliable. Emission factors and overall control efficiency values are inherently less accurate because of the limited availability of source-specific data.

The overall collection efficiencies for lead are assumed equivalent to those for collection of nonlead particulates. This assumption has been verified by limited EPA source tests on fabric filters.[2] For ESP's and wet scrubbers, some recent information indicates differences in the collection efficiency between particulates and lead.[5,6,7,8] Lead compounds are probably less efficiently removed by ESP and wet scrubbers whenever lead emissions are concentrated in the very fine particulate sizes.

EMISSION TRENDS AND PROJECTIONS

Lead emissions from combustion of gasoline can be expected to decrease by about 65 percent by 1985 as levels of lead in gasoline are reduced from the current 0.45 g/litre (1.7 g/gal) to 0.13 g/litre (0.5 g/gal)[3] and as sales increase at 2 percent per annum. These factors represent a reduction of 58 percent of total 1975 lead emissions. They will also result in reduction of lead emissions from waste oil combustion because of a proportionate reduction in lead content, from lead alkyl manufacturing because of reduced production plans. Federal new source performance standards for particulate will also strongly influence future lead emissions. Following are estimates of 1985 lead emissions: gasoline combustion 44.9 Gg (49,500 tons); stationary combustion sources, 3.7 Gg (4038 tons); and industrial processes, 4.2 Gg (4650 tons). These values total 52.8 Gg (58,200 tons) of lead emissions, a reduction of about 63 percent from 1975 emissions.

CONTROL TECHNIQUES

Emissions of lead particulates from automotive sources can be reduced by installing control devices, by reducing or eliminating the lead content of gasoline, or by a combination of these methods. The Federal law requires the reduction of the average lead content in gasoline from 0.45 g Pb/litre (1.7 g Pb/gal) to 0.13 g Pb/litre (0.5 g Pb/gal) by 1979 which should reduce gasoline lead emissions substantially.[3]

Application of particulate traps on automotive exhaust systems is under investigation and is discussed in detail in this document. However, there are no traps installed commercially at this time.

For stationary source emissions, the use of high-efficieny, fine particulate controls such as electrostatic precipitators (ESP), fabric filters, and wet scrubbers is reviewed. Few processes incorporate control devices specifically for lead control. Rather, these devices are installed for collection of particulate to comply with state or federal regulations and/or to recover valuable product. Control techniques described herein are not, therefore, intended exclusively for lead control, but do offer potential for reducing lead emissions. Table 2 shows the lead control techniques that are available or that are used by the various lead emission sources.

Selection of a control strategy must be based upon the required efficiency, gas stream characteristics, particle characteristics, space restrictions, and many other site-specific, economic, and technical factors. Also, the lead emissions and the effects of lead pollution can be reduced by relocation or shutdown of sources, fuel substitution, process changes, improvement of operating practices, and atmosphere dispersion techniques.[4] Table 3 shows the possible lead emission reductions with the various control techniques available.

COST OF CONTROL

The incremental costs to the consumer of nonlead motor

vehicle fuels are difficult to assess because they involve extremely complex technical and political factors.

TABLE 2

LEAD CONTROL TECHNIQUES

Controlled Source	Principal Method of Control
Gasoline combustion	Reduce Pb in gasoline.
Waste oil disposal	Pretreat before burning Blend with fuel oil Reduce Pb in gasoline
Metallurgical processes	Fabric filters, ESP
Lead alkyl manufacture	Scrubbers, fabric filters
Combustion and incineration	ESP
Industrial processes	Fabric filters, scrubbers

TABLE 3

PERFORMANCE OF LEAD EMISSION CONTROLS

Control Device	Possible Emission Reduction*
Lead particulate traps-autos	≥90%
Fabric filters	95-99.99%
Scrubbers	80-99%
ESP	95-99.7%
Cyclone collectors	≥85%

* Assuming that lead particulates are captured with the same control efficiency as for total particulates.

Results of some cost studies (Section 3.1.3) indicate that the incremental consumer cost of controlling lead emissions by requiring the use of nonleaded gasoline ranges from 1 to 4 cents per gallon.

Incremental costs for various types of particulate and lead collection devices range from about $5 to $20 per new automobile, depending upon the type of device. Retrofit installations will cost considerably more.

The capital and annualized costs of particulate emission control are given for each industrial process and control alternative. These data are based on actual operations or engineering cost analyses and are escalated to reflect mid-1976 costs. These costs generally reflect the cost of compliance with existing regulations for particulate emissions. Costs attributable to control of lead emissions are not provided, since they would depend on the degree of control required at a specific site, and it is generally impossible to allocate lead control costs from costs for total particulate control.

IMPACTS OF CONTROLS

The environmental and energy impacts of meeting an air quality standard for lead are thought to be negligible. Relatively few plants may be affected by such a standard. The additional wastewater and solid wastes generated above that generated by SIP controls will be insignificant. The energy

impact may be significant at plants which utilize wet scrubbers or which require additional control equipment. In this document, order of magnitude estimates are given for particulate SIP control impacts for major sources of lead. Generally, impacts for lead control will be much less than for particulate control.

REFERENCES

1. Scientific and Technical Assessment Report. Office of Research and Development. U. S. Environmental Protection Agency. Washington, D. C. EPA 600/6-75-00X. STAR series. February 1975.

2. Preferred Standards Path Analysis on Lead Emissions from Stationary Sources. Emission Standards and Engineering Division. U. S. Environmental Protection Agency. Research Triangle Park, N. C. September 4, 1974.

3. Environmental Protection Agency Regulations of Fuels and Fuel Additives. 40 CFR 42675. Part 80. Subpart B. Sec. 80.20 (a) (1). September 28, 1976.

4. Control Techniques for Particulate Air Pollutants. AP-51. U. S. Environmental Protection Agency. Office of Air Programs. Research Triangle Park, N. C. January 1969. 215 p.

5. KaaKinen, J. W., R. W. Jordan, M. H. Lawasani, and R. E. West. Trace Elements Behavior in Coal-Fired Power Plants. Environmental Science and Technology. Volume IX (9): 862-869. September 1975.

6. Lee Jr., R. E., H. L. Crist, A. E. Riley, and K. E. MacLeod. Concentration and Size of Trace Metal Emissions from a Power Plant, a Steel Plant, and a Cotton Gin. Environmental Science and Technology. Volume IX (7): 643-647. July 1975.

7. Klein, D. H. et al. Pathways of Thirty-Seven Trace Elements Through Coal-Fired Power Plant. Environmental Science and Technology. Volume IX (10): 973-979. October 1975.

8. Natusch, D. F. S. and C. A. Evans, Jr. Toxic Trace Elements: Preferential Concentration in Respirable Particles. Science. Volume 183: 202-204. January 1975.

4.0 INDUSTRIAL PROCESS SOURCES

Industrial processes contributed an estimated 7.1 Gg (7,800 tons) or 5.0 percent of the total nationwide atmospheric lead emissions in 1975. The major source categories include production of lead alkyl and storage batteries, primary and secondary nonferrous metals, ferrous metals and alloys, and lead oxide, and also lead handling operations and miscellaneous sources.

4.1 LEAD ALKYL MANUFACTURE

Alkyl lead compounds, tetraethyl lead (TEL) and tetramethyl lead (TML), are used as antiknock gasoline additives. Additive production in 1975 was 296 Gg (326,000 tons), approximately 72 percent of the industrial capacity, accounting for the consumption of 190 Gg of refined lead (207,000 tons).[1] There are six plants in the United States, owned by four companies.[2] The 1975 lead emissions from the lead alkyl industry were estimated at 1000 Mg (1,100 tons).[3]

Commercially, TEL and TML are produced either by alkylation of sodium-lead alloy or by electrolysis of an alkyl Grignard reagent. TEL accounted for over 75 percent

of the additive production in 1973. More than 90 percent of the TEL is made by the sodium-lead alloy process.[4]

4.1.1 Sodium-Lead Alloy Process[3]

Figure 4-1 is a simplified process flow diagram for the batch manufacturing of TEL. The basic step in this process is the reaction of sodium-lead alloy with an excess of ethyl chloride in the presence of acetone catalyst. The reaction takes place in autoclaves at 70 to 75°C (158 to 167°F) and a pressure of 350 to 419 kPa (50 to 60 psi) as follows:

$$4\ NaPb + 4\ C_2H_5Cl \rightarrow (C_2H_5)_4\ Pb + 4\ NaCl + 3\ Pb$$

Production of TML by the sodium-lead alloy process is similar, except that methyl chloride is used instead of ethyl chloride. To increase the reactivity of sodium-lead alloy and methyl chloride, the reaction is carried out in the presence of a catalyst such as aluminum chloride and diluent acetone at higher temperatures and pressures. TML may be recovered by scrubbing the vapors with mineral oil.

4.1.1.1 Alloy Manufacture - Sodium-lead alloy is produced by combining molten lead, virgin or recycled, with molten sodium at a ratio of 9 to 1 by weight in an alloy pot. The molten alloy is then solidified and flaked in an oil-cooled flaker. The flaked alloy is discharged, under nitrogen blanket, into the autoclaves. Ethyl chloride is then fed to the autoclaves over a period of an hour or more. The auto-

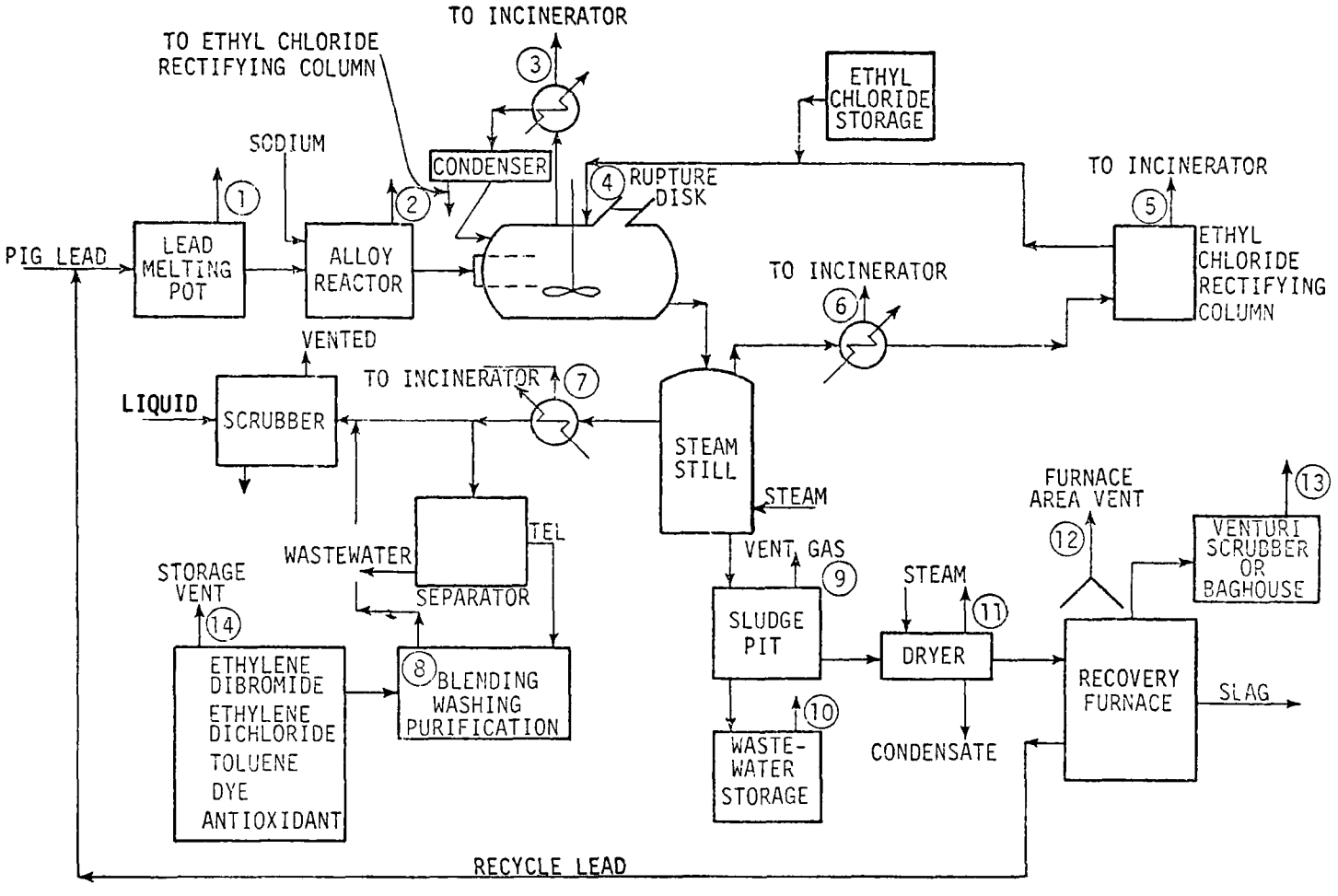

Figure 4-1. Sodium-lead alloy process for the production of tetraethyl lead.

claves are equipped with mixing arms to promote contact between solids and liquids. To prevent serious explosions in case of excessive pressure, the autoclaves are equipped with rupture discs.

4.1.1.2 TEL Manufacture - The batch is initially heated to start the reaction; the exothermic reaction is then maintained at 70 to 75°C (158 to 167°F) by means of external cooling and refluxing of ethyl chloride. About 10 percent of the alloy is consumed in side reactions, resulting in the formation of hydrocarbons such as ethane, butane, and ethylene. Noncondensibles may be vented directly to the atmosphere or incinerated.

4.1.1.3 Alkyl Chloride Separation and Storage - When the reaction is complete after several hours, the autoclave pressure is released by venting through a condenser to remove excess ethyl chloride. The ethyl chloride is purified in a distillation column for reuse. TEL yields are in the range of 85 to 90 percent.

The reaction mass, containing NaCl, TEL, unreacted lead, and the remaining dissolved ethyl chloride, is discharged into steam stills to separate the TEL product from the other components. In the stills, the dissolved ethyl chloride is vaporized in the first 10 to 15 minutes of distillation and is collected by a brine condenser system.

The collected ethyl chloride is also purified in a distillation column and recycled. After this initial period, only a water-cooled condenser is used to collect TEL and water at about 20°C (70°F). Noncondensible vapors are vented to the atmosphere. To prevent agglomeration of the still residue, "still aids" such as sodium thiosulfate, ferric chloride, and liquid soap are usually added to the still. The separation operation lasts for about two hours, and the residue in the still is then sluiced to a sludge pit for subsequent lead recovery.

The collected TEL and water mixture is decanted, and the TEL is purified by air blowing and/or washing with dilute aqueous solutions of oxidizing agents, such as hydrogen peroxide. This process oxidizes and precipitates the bismuth originally present in the raw lead. The clean TEL is filtered, ethylene dichloride or ethylene dibromide is added to prevent fouling of spark plugs, and a dye is added to prepare a TEL motor mix. To prevent oxidation, the TEL motor mix is usually stored under nitrogen or glycerine.

4.1.1.4 Lead Recovery - The sludge, consisting of fine lead particles, water, dissolved salt, and traces of TEL, is leached with water in the sludge pit to separate lead and salt. The covered sludge pit area is vented with an exhaust fan to a stack, minimizing the TEL concentration in the air

of the building. The sludge pit bottoms, mostly lead, are sent to an indirect steam dryer operated at approximately 177°C (350°F). Water vapor, along with small amounts of other compounds such as ethyl chloride, is vented from the dryer through a water-cooled condenser. Noncondensible vapors from the dryer are sometimes vented through the sludge pit building.

Dried sludge is fed to a gas or oil-fired reverberatory furnace to recover lead. In the furnace, slag is tapped for approximately 15 minutes in every 8-hour period. Molten lead is tapped from below the slag blanket on a fairly continuous basis. Makeup lead as required is added to the molten lead recovered from this furnace. Figure 4-2 illustrates a typical reverberatory furnace.

4.1.1.5 Emissions - TML and TEL are highly toxic and can be introduced into the blood by contact with the skin or by breathing the vapors. Emissions sources of lead in a plant using the sodium-lead alloy process may be grouped in three categories:

- Particulate emissions from the lead recovery furnace, lead melting furnace, and alloy reactor.
- Fugitive emissions in the event of blowing of rupture discs.
- Gaseous discharges containing hydrocarbons and alkyl lead from all other process vents.

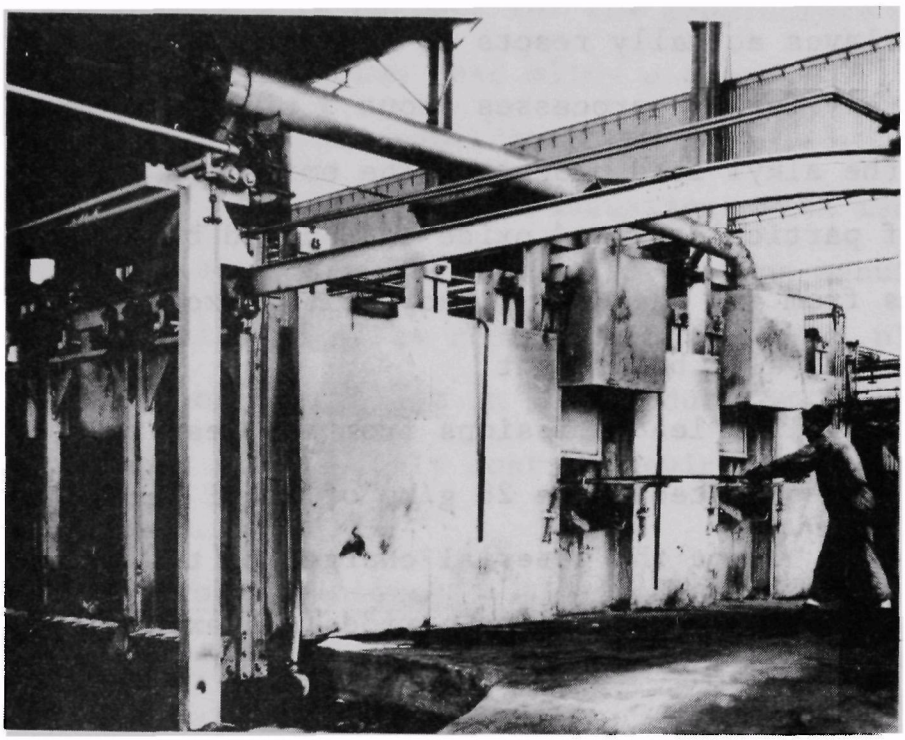

Figure 4-2. Typical lead reverberatory furnace used in lead additive manufacturing.
(Courtesy of Aaron Ferrer and Sons, Inc., Los Angeles, Ca.)

The recovery furnace is a major source of particulate emissions. The reaction equation given in Section 4.1.1 indicates that about one-third of the lead introduced into the autoclaves actually reacts to form alkyl lead. Thus, the recovery furnace processes about 3 times the amount of lead in the alkyl lead product. The emissions consist mainly of particulate lead oxide and should be similar to emissions from any secondary lead smelter except that some chlorides may also be present.

Uncontrolled lead emissions from the lead recovery furnace are estimated to be 28 g/kg of alkyl lead product (55 lb/ton). Since the material charged to the furnace is wet, emissions during charging periods are expected to be minimal.

Other potential sources of particulate emissions are the melting furnace and alloy reactor. While emissions from pot furnaces for similar operations could be up to 0.4 g/kg of charge (0.8 lb/ton), emissions from the melting furnace and alloy reactor are reported to be negligible. Emissions of gaseous hydrocarbons and alkyl lead are also negligible.

Lead emissions, in the form of alkyl lead vapor, from process vents are estimated at up to 2.0 g/kg product (4.0 lb/ton) in the TEL manufacturing and 75 g/kg product (150 lb/ton) in TML manufacturing. The difference in volatility of

TEL and TML accounts for the difference in vapor emissions. A sludge pit emission factor is estimated at about 0.6 g Pb/kg product (1.2 lb Pb/ton) for the manufacture of both TEL and TML by the sodium lead alloy process.

Fugitive emissions considered are those resulting from the blowing of rupture discs. Discussions with manufacturers indicate that such occurrences are rare. One manufacturer stated that only two discs ruptured in their TML plants in 1976, while none were blown in TEL production.[5] Currently, blow-off tanks are the only control device used when a rupture occurs.

4.1.1.6 Control Techniques[3]

A. Lead Recovery Furnace: A number of fabrics are available for use on the lead recovery furnace. The exhaust gases are cooled with dilution air or by water spraying to bring the gases to the temperature range of the fabric filter material. Filtering velocities used on this type of furnace range from 0.6 to 1.8 cm/s (1.1 to 3.5 fpm). This ratio would depend on the type of fabric, pressure drop desired, and the bag-cleaning mechanism. The pressure drop ranges from 1.0 to 2.0 kPa (4 to 8 in. H_2O). Although use of fabric filters may entail operational and maintenance problems such as burning, tearing, and clogging of the bags, a properly designed and operated fabric filter may easily attain 99 percent or higher efficiency.

Emissions from the lead recovery furnace are also controlled with wet scrubbers, constructed of mild steel, of the orifice, venturi, or packed-tower type, with water as the scrubbing medium. Scrubber efficiency depends on the type of scrubber, whether low-energy (80 to 85 percent) or high-energy (95 to 99 percent). Pressure drop across the scrubber would depend on the efficiency desired. A high-energy venturi scrubber with a pressure drop of 10 to 20 kPa (40 to 80 in. H_2O) and liquid-to-gas ratio of 1.1 to 1.3 liters l/m^3 of gas (8 to 10 $gal/10^3$ ft^3) may attain an efficiency of 99 percent or higher.

B. Process vents and sludge pits: Some plants use incinerators to control hydrocarbon emissions. To achieve complete combustion, the incineration temperature should be 800°C (1472°F) or higher. Alkyl lead compounds are converted to inorganic lead particulates during incineration. If streams relatively rich in lead alkyl could be segregated from lean streams, the concentrated streams could be incinerated for hydrocarbon control and passed through a fabric filter to control the resultant lead particulates. Alternatively, streams containing high concentrations of alkyl lead may be scrubbed with water prior to combining with lean streams and incinerating.

One manufacturer designed for deepwell injection of aqueous TEL-saturated waste. This manufacturer advises that he now uses the deepwell for injection of hydrocarbon and some ethyl chloride, and that the TEL content of this waste is negligible.[5]

4.1.2 Electrolytic Process[3]

Figure 4-3 is a simplified flow diagram of the electrolytic process. The process description here is for producing TML; production of TEL is similar except that ethyl chloride is used instead of methyl chloride.

4.1.2.1 Processes - In the electrolytic process, a solution of methyl magnesium chloride and methyl chloride is electrolyzed with lead metal as the anode, in the following overall reaction:

$$2\ CH_3MgCl + 2\ CH_3Cl + Pb \rightarrow (CH_3)_4\ Pb + 2\ MgCL_2$$

Methylmagnesium chloride, the Grignard reagent, is prepared by reacting magnesium turnings with excess of methyl chloride in the presence of ether solvents. This solution is fed to the electrolytic cells. The cell walls constitute the cathode, and lead pellets fed at the top of the cell constitute the anode. Membranes separate the anode from the cathode.

During the electrolysis, the methyl ions (CH_3) migrate to the lead pellets and form TML as follows:

$$4\ CH_3 + Pb - 4e \rightarrow (CH_3)_4\ Pb$$

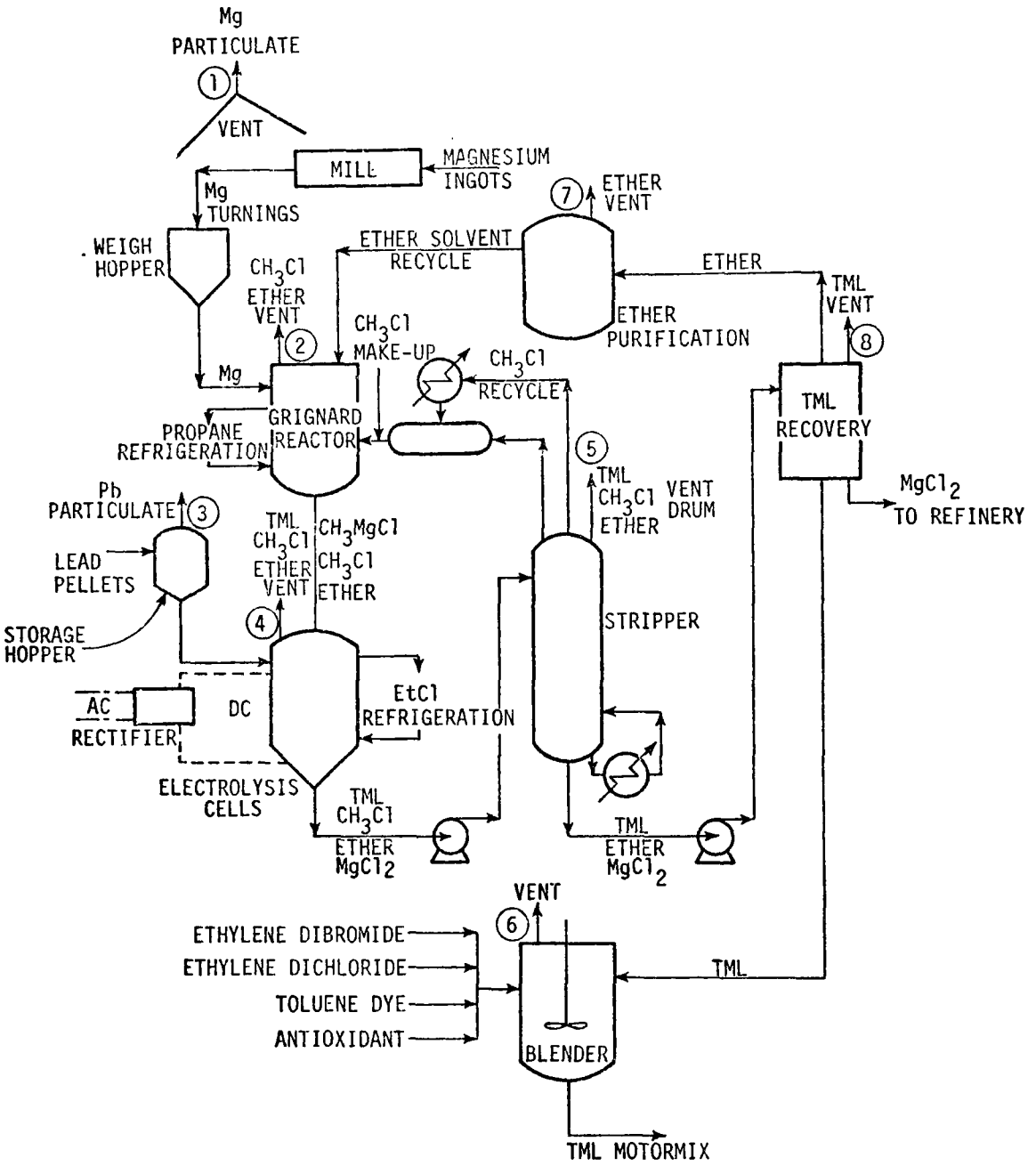

Figure 4-3. Electrolytic process for tetramethyl lead production.

The magnesium chloride ions ($MgCl^+$) migrate to the cell walls, where metallic magnesium and magnesium chloride are formed. When electrolysis is complete, the solution first goes to a stripper for methyl chloride recovery. The remaining three compounds are separated by a combination of distillation and solvent extraction operations. Purified ether and methyl chloride are recycled to the Grignard reactor, and the $MgCl_2$ is processed for recovery of magnesium metal. TML yields are about 96 percent.

The TML is fed into a blender to which ethylene dibromide, ethylene dichloride, toluene, dye, and antioxidant are added to make a finished motor mix.

4.1.2.2 Emissions - Data on emissions from the electrolytic process are scarce; only one plant uses this process. Controlled lead emissions from this plant from all operations were estimated to be approximately 0.5 g/kg product (1.0 lb/ton), amounting to approximately 14 Mg of lead (15 tons) in 1975.[3]

4.1.2.3 Control Techniques[3] - Unlike the sodium-lead alloy process, electrolytic manufacture does not require a lead recovery furnace and hence there is no major source of particulate emissions. It is economically necessary to recover the ether solvents for recycle. Simultaneously, some alkyl lead is also recovered by scrubbing.

This plant uses an elevated flare and a liquid incinerator to control emissions from process vents. Liquid particles in the gas stream going to the flare are collected in a knock-out drum and incinerated periodically, about seven times a year. About 30 to 40 m^3 of liquid waste (6000 to 8000 gal) is incinerated annually.

A scrubber with toluene as the scrubbing medium is used for controlling emissions from the blending and tank car loading-unloading systems. No information on the efficiency of this scrubber is available.

Except for the elevated flare, liquid incinerator, and scrubber, the electrolytic plant has no equipment installed expressly for controlling emissions. The entire plant operates under a gas (nitrogen) padding system, and fugitive emissions are minimal. In the past, the plant had measured ambient concentrations of alkyl lead outside the boundary of the plant; however, the results did not warrant source testing.

4.1.3 *Control Costs*

4.1.3.1 Tetramethyl Lead Production - A 54,400 Mg/yr. (60,000 TPY) tetramethyl lead model plant was studied to determine the control costs. Three lead recovery furnaces are equipped with a cyclone/quench tower/venturi scrubber system with a design capacity of 7.1 m^3/s at 426°C (15,000 acfm at 800°F) and an overall efficiency of 95 percent. The total lead emissions are 171 kg/hr (377 lb/hr). Auxiliary equipment includes I.D. fan system, venturi tank, pumps, vacuum filter system, and ductwork. A capital cost of $820,000 is estimated for total installation. An annualized cost of $417,000 is estimated including utilities, maintenance, labor, overhead, and fixed costs.[a] Operating time is assumed 8400 hr/yr and labor requirements are 8400 hr/yr.

Vapors from the process vents in the plant are controlled by a packed bed absorption column. Uncontrolled emissions are estimated at 450 kg/hr (1000 lb/hr) TML vapor. Total capital costs, including ductwork, I.D. fan systems, hold tank, and pumps, are estimated at $617,000 for an exhaust flow of 19.7 m^3/s at 27°C (41,800 acfm at 80°F).[a] Annualized costs are estimated at $353,000, including maintenance, labor, utilities, overhead and fixed costs. System efficiency is 94 percent or greater. Operating time is estimated at 8400 hours annually. Annual labor is assumed to be 4200 hours.

---

[a] See Section 2.9 and Appendix B for discussion of cost analyses. Detail cost studies are available from EPA upon request.

Sludge pit exhausts are controlled by similar packed-bed scrubber system. Capital costs are estimated at $430,000 for a capacity of 13.7 m^3/s at 27°C (28,900 acfm at 80°F). An annualized cost of $277,000 is estimated.[a]

The total capital for all three systems is $1.87 million. Total annualized costs are $1.05 million or about 1.94¢/kg (0.88¢/lb) of TML product.

4.1.3.2 Tetraethyl Lead Production - A 54,400 Mg/yr. (60,000 TPY) tetraethyl lead model plant was also studied to determine control costs. The recovery furnace and sludge pit control systems are identical to the systems discussed above. Process vents in the model TEL plant exhaust 10.9 m^3/s at 27°C (23,000 acfm at 80°F) to a packed-bed scrubber system with an efficiency of 95 percent. Uncontrolled emissions are 1.6 kg/hr (3.6 lb/hr) TEL vapor. Capital costs for this system are estimated at $359,000 including ductwork, I.D. fan, hold tank, and pumps. Annualized costs are determined to be $245,000, including maintenance, labor, overhead, utilities, and fixed costs.[a] Annual operating time is 8400 hours and annual labor time is 4300 hours.

The total capital costs for all three control systems are estimated at $1.61 million. Annualized costs are determined to be $939,000 or about 1.72¢/kg (0.78¢/lb) of TEL product.

---

[a] See Section 2.9 and Appendix B for discussion of cost analyses. Detailed cost studies are available from EPA upon request.

4.1.3.3 Cost Equations - The capital and annualized costs for the recovery furnace/venturi scrubbing system are expressed below in terms of exhaust volume and annual labor hours:

S.I. Units

Capital, $ = $2.53 \times 10^5 V^{0.6}$

Annualized, $ = $3516V + 19.6H + 68,900V^{0.6}$

$V = m^3/s$ at 427^oC
H = annual labor hours

$2.4 < V < 21$
range

English units

Capital, $ = $2560Q^{0.6}$

Annualized, $ = $1.66Q + 19.6H + 696Q^{0.6}$

Q = acfm at 800^oF
H= annual labor hours

$5,000 < Q < 45,000$
range

The capital and annualized costs for the packed bed scrubbing systems are expressed below in terms of exhaust volume and annual labor hours. The equations are derived from the three systems given above:

S.I. units

Capital, $ = 29,300 V + 36,100

Annualized, $ = 12,200 V + 19.6H + 25,600

$V = m^3/s$ at 27^oC
H = annual labor hours

$9 < V < 28$
range

English units

Capital, $ = 13.85Q + 36,100

Annualized, $ = 5.77Q + 19.6H + 25,600

Q = acfm at 80°F
H = annual labor hours

$20,000 < Q < 60,000$
range

As chapter two states, the preceding costs have been based on exhaust gas parameters and control system configurations tailored to typical existing TEL and TML plants. However, control costs at an actual lead additives plant could vary considerably from the above, due to unique conditions specific to that installation.

For instance, one major additives producer has provided costs for controlling the several process points at his plant.[5,6] To control the three lead recovery furnaces with baghouses, this producer estimates a required investment of $1.5 to $2.0 million--a figure which includes pelletizers for processing the captured dust before recycling to a secondary lead smelter. This high capital cost is necessary to treat the large gas volume (37,000 ACFM at 350°F) which is, in turn, created by large quantities of dilution air.

The manufacturer also gives a $900,000 installed cost for a packed scrubber system on the TML process vent, based on a design flowrate of 1500 SCFM. (This cost has been escalated from a $400,000 system, installed in 1968). This is 46 percent higher than the $617,000 investment (shown on page 4-15) which is based on 41,800 ACFM at 80°F. However, the control system designs are vastly different. The EPA system consists of a packed scrubber (using water), fan system, ductwork, holding tank, and pumps. The manufacturer's system includes all of these plus a stripper - cooler system for separating the absorbent (a kerosene absorbing oil) from the captured alkyl vapor.

A similar packed bed scrubber system to control the sludge pit exhaust in a model TEL or TML plant would require an investment of $2.5 to 3.0 million, according to this manufacturer. This is substantially higher than the EPA costs ($430,000), again because the manufacturer's system is much more complex.

Finally, the manufacturer notes that the EPA investment figure given for the TEL process vent packed scrubber system is much too low. The manufacturer neglects to give his estimate of a scrubber system cost. However, he notes that TEL cannot be recovered from absorbing oil, as can TML. Thus, packed scrubbing is not a technologically feasible control method here. As an alternative, he suggests incineration of the process vent, followed by collection of the resultant particulate lead in baghouses.

4.1.4 Impacts

A. Emission Reductions

Lead emission reductions from lead recovery furnaces are up to 28 kg/Mg of alkyl lead product (55 lb/ton). Particulate emissions from pot furnaces can be reduced by 0.4 kg/Mg charge (0.8 lb/ton). Alkyl lead vapors from process vents can be reduced by up to 2.0 kg/Mg product (4.0 lb/ton) for TEL production and up to 75 kg/Mg product (150 lb/ton) for TML production. Sludge pit lead emissions can be reduced by about 0.6 kg/Mg product (1.2 lb/ton).

B. Energy Impact

Data for energy requirements to product TEL and TML are not available. The energy required to operate the control equipment on the model processes are as follows: recovery furnace/venturi scrubber, 0.04 GJ/Mg lead (0.04 MM Btu/ton); sludge pit/packed tower, 0.13 GJ/Mg throughput (0.13 MM Btu/ton); TML process vent/packed tower, 0.17 GJ/Mg throughput (0.17 MM Btu/ton); and TEL process vent/packed tower, 0.11 GJ/Mg throughput (0.11 MM Btu/ton).

C. Wastewater Impact

The amount of wastewater generated to produce TML or TEL is not available. The wastewater generated requiring treatment amounts to about 0.42 m^3/Mg lead (100 gal/ton) for the model recovery furnace scrubber systems. The process vent-gas absorption columns discharge 0.70 m^3/Mg product (170 gal/ton) and 1.3 m^3/Mg product (320 gal/ton) for TML and TEL manufacturing, respectively. Large treatment plants are on-site to treat contaminated wastewater. Increased wastewater volume from air pollution control equipment is not expected to require additional treatment equipment.

D. Solid Waste Impact

Data on solid wastes generated by TEL and TML production are not available. Solid wastes from emission control equipment from recovery furnaces containing about 110 kg/Mg product (55 lb/ton) of lead are recycled. Therefore, the solid waste impact from emission control will not be significant.

4.1.5 References for Section 4.1

1. Lead Industry in October 1975. Mineral Industry Survey. U. S. Bureau of Mines. Washington, D.C. October 1975.

2. Chemical Engineering. McGraw-Hill. New York, N.Y. April 28, 1975. p. 109.

3. Background Information in Support of the Development of Performance Standards for the Lead Additive Industry, Interim Report No. 2. PEDCo-Environmental Specialists, Inc. Cincinnati, Ohio. For Environmental Protection Agency, Research Triangle Park, N.C. Contract No. 68-02-2085. January 1976

4. Betz, R. P. et al. Economics of Lead Removal in Selected Industries. Battelle Columbus Laboratories. Columbus, Ohio. For U. S. Environmental Protection Agency, Research Triangle Park, N. C. Contract No. 68-02-0611. August 31, 1973.

5. Private communication between E. N. Helmers, Engineering Department, E. I. du Pont de Nemours and Company, Inc. (Wilmington, Del) and D. R. Goodwin, Office of Air Quality Planning and Standards, U. S. Environmental Protection Agency, Research Triangle Park, North Carolina. March 1, 1977.

6. Private communication between W. M. Vatavuk, Office of Air Quality Planning and Standards, U. S. Environmental Protection Agency, Research Triangle Park, North Carolina, and W. S. Murray, Inorganic Chemicals Department, E. I. du Pont de Nemours and Company, Inc. (Deepwater, N.J.). March 25, 1977.

4.2 STORAGE BATTERY MANUFACTURE

Manufacture of lead-acid storage batteries in 1975 decreased over 11 percent from the previous year to 48,325,000 batteries,[1,2] accounting for 54 percent of the 1.176 Tg of lead (1.297 million tons) consumed in the United States.[3] A total plant emission factor of 8.0 kg/1000 batteries produced[4,5,6] (17.7 lb Pb/1000 batteries) is estimated, excluding lead oxide production. Manufacture of storage batteries accounted for approximately 82 Mg of lead emissions (90 tons) nationwide in 1975. The associated production of lead oxide caused the emission of 80 Mg of lead (88 tons).

4.2.1 Processes and Emissions

A flow diagram for a typical lead-acid battery manufacturing plant is given in Figure 4-4. Lead oxide manufacturing may or may not be carried on at the plant. A detailed description of lead oxide mills is given in Section 4.6.

4.2.1.1 Grid Casting - Casting techniques for battery grids vary with the alloy used, the type of molds, and mold preparation before casting. Lead alloy ingots are melted in a gas-fired lead pot at approximately 370°C (700°F). The furnace is often equipped with a hood to vent the fumes to a control device or to the atmosphere. Melting pots are attached directly to some grid casting machines. The molten

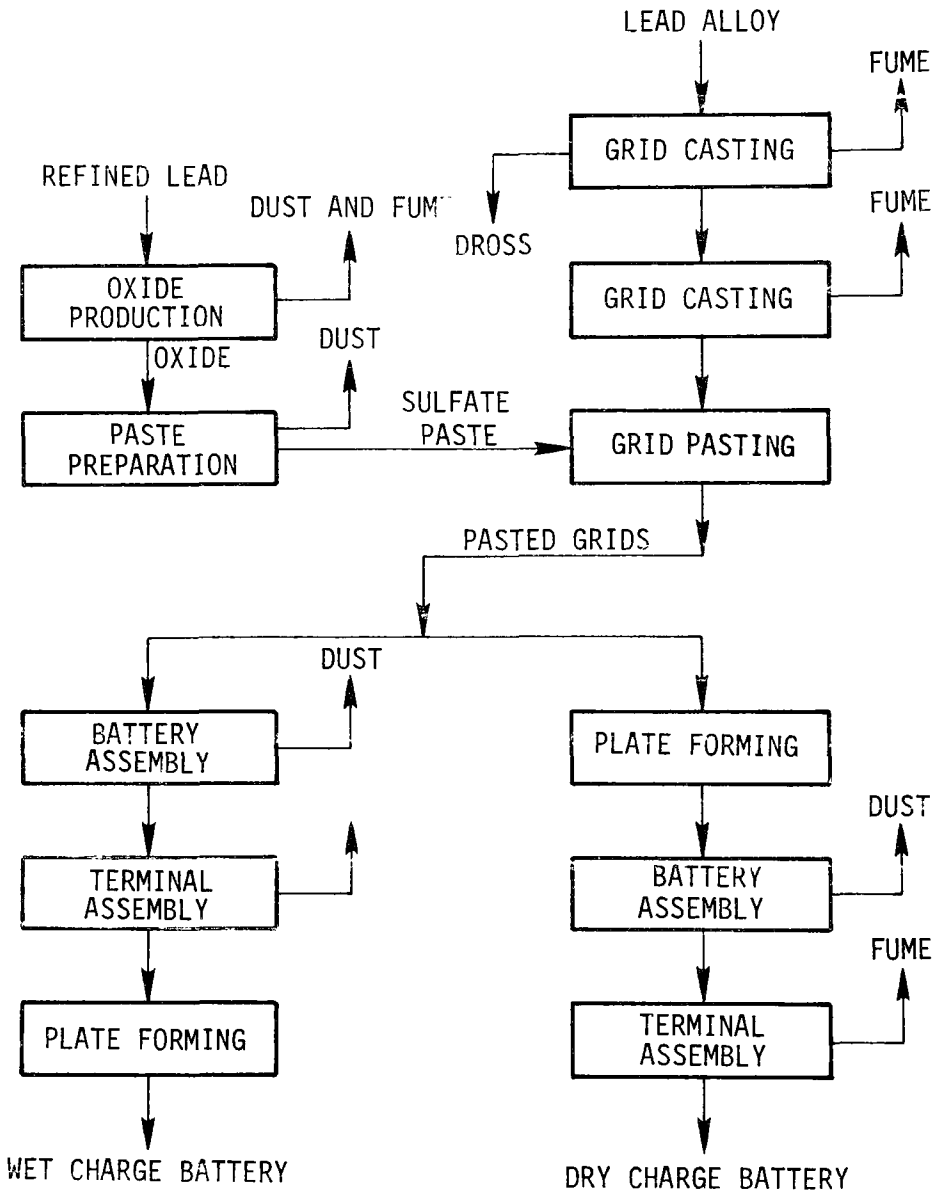

Figure 4-4. Flow diagram of a lead-acid battery plant.

lead flows from these pots directly into the molds that form the grids; they are then ejected, trimmed, and stacked. Some facilities feed the molding machines from a central pot furnace, from which the molten lead is pumped.

4.2.1.2 Paste Mixing - The paste making operation, a batch-type process, takes place in a Muller, Day, or dough-type mixer. From 272 to 1360 kg (600 to 3000 lb) of lead oxide (a mixture of PbO and Pb) is loaded manually or automatically to the mixer. Water, varying amounts of sulfuric acid, an organic expander, and other constituents are added, depending on whether the paste batch is for positive or negative plates. The mixture is blended to form a stiff paste. Because of the exothermic conditions, mixers are usually water-jacketed and air-cooled to prevent excessive temperature buildup which causes the paste to become stiff and difficult to apply to the grids. A duct system vents the exhaust gases from the mixer and loading station to a control device.

Duration of the mixing cycle is dependent on the type of mixer used, ranging from 15 minutes to an hour.

4.2.1.3 Grid Pasting - Pasting machines force the lead sulfate paste into the interstices of the grid structure at rates exceeding 200 plates per minute (the grids are called plates after the paste has been applied). The freshly

pasted plates are transported by a horizontal chain through a temperature-controlled heated tunnel about 6 m (20 feet) long, where the surface water is removed. This allows the plates to be stacked without sticking together. No emission control is generally provided or needed for grid pasting and plate drying operations. The floor area around pasting operations must be kept clean of paste, however, since this is a potential source of fugitive dust. The plates are cured for up to 72 hours. Following the curing stage, the plates are sent to the assembly operations where they are stacked in an alternating positive and negative block formation. Insulators are sandwiched between each plate to insulate the oppositely charged plates. These dividers are made from materials such as wood, treated paper, plastics, or rubber. Although machines have been designed that can stack the plates and separators automatically, hand stacking is not uncommon, even in some relatively large plants.

4.2.1.4 Lead Burning - Leads (pronounced leeds) are welded to the tabs of each positive plate and each negative plate, fastening the assembly (element) together: this is the burning operation. An alternative to the welding or burning process is the "cast-on-strap" process. In the latter, molten lead is poured around and between the plate tabs, thus forming the connection. Then a positive and a negative

terminal are welded to the element. The completed elements can go to either the wet or dry battery lines.

4.2.1.5 Battery Assembly - In the wet battery line, elements are placed within cases made of durable plastic or hard rubber. Covers equipped with openings and lead inserts are aligned so that the terminals project from the inserts. The covers are sealed to the cases and the batteries are filled with dilute sulfuric acid and made ready for formation.

For dry batteries the elements are formed prior to being placed in a sealed case. The dry batteries are shipped without acid.

4.2.1.6 Formation - Formation is a chemical process wherein the inactive lead oxide-sulfate paste is converted into an active electrode. Formation is essentially an oxidation-reduction reaction, wherein the positive plates are oxidized from lead oxide to lead peroxide and the negative plates are reduced from lead oxide to metallic lead. This is accompanied by placing the unformed plates in a dilute sulfuric acid solution and connecting the positive plates to the positive pole of a d.c. source and the negative plates to the negative pole of the d.c. source.

4.2.1.7 Lead Recovery - All batteries are inspected during manufacturing. The various metallic parts such as grids,

posts, and connectors, if not satisfactory for production use, are remelted for reuse.

Pot-type furnaces are generally used for reclaiming scrap lead at battery manufacturing plants. Defective lead parts are collected and stored until a sufficient amount is available for charging a remelting furnace, usually gas-fired. Emissions from remelting furnaces resemble those from grid casting. Because of the relatively low operating temperatures, emission concentrations are low. Emissions generally are visible only when oily scrap or floor sweepings are charged. Many plants send scrap parts to an outside smelter. Some plants feed scrap plates to a tumbling operation to separate the lead paste from the grids. The separated paste is then sent to the paste mixer, and the grids are remelted.

4.2.1.8 Emissions - Table 4-1 presents characteristics of exhaust gas from the various sources within a battery plant. A typical uncontrolled lead emission factor is estimated at 8.0 kg/1000 batteries (17.7 lb/1000 batteries). For a production rate of 48,325,000 batteries[1] and an overall industry emission control of 80 percent[9], the 1975 lead emissions were about 82 Mg (90 tons).

There are no significant sources of lead fugitive emissions at a battery plant if good housekeeping is prac-

Table 4-1. TYPICAL EXHAUST PARAMETERS FOR BATTERY MANUFACTURING OPERATIONS[a]

Facility code letter	Facility	Temperature °C	Temperature (°F)	Percent moisture	Particulate grain loading g/m³	Particulate grain loading (gr/scf)	Gas Volume, m³/s (acfm) 500 BPD	2000 BPD	6500 BPD	Emissions, kg (lb)/10³ batteries Particulate[g]	Lead
A	Grid casting furnace[b]	116	(240)	2-3	<0.02	(<0.01)	1.18 (2,500)	1.89 (4,000)	4.25 (9,000)	0.8 (1.8)	0.4 (0.9)
B	Grid casting machine[b]	38	(100)	2-3	<0.02	(<0.01)	1.18 (2,500)	1.89 (4,000)	4.25 (9,000)		
C	Paste mixer	38	(100)	2-4	0.14	(0.06)	0.38 (800)	1.42 (3,000)	4.72 (10,000)	1.00 (2.2)	0.5 (1.10)
D	Lead oxide mill[c]	116	(240)	2-3	0.02	(0.009)[e]	c (c)	0.66 (1,400)	2.08 (4,400)	0.10 (0.24)	0.05 (0.12)
E	Three-process operation[d]	27	(80)	1-2	0.05	(0.02)	8.50 (18,000)	12.27 (26,000)	24.5 (52,000)	13.2 (29.2)	6.60 (14.6)
F	Lead reclaim furnace	116	(240)	2-3	>0.02	(>0.10)	3.30 (7,000)	3.30 (7,000)	3.30 (7,000)	0.70 (1 54)	0.35 (0.77)
G	Small parts casting	38	(100)	1-2	0.02	(0.01)	1.89 (4,000)	1.89 (4,000)	1.89 (4, 00)	0.09 (0.19)	0.05 (0.10)
H	Formation	27	(80)	N.A.	3.68	(1.6)[f] (H_2SO_4)	2.36 (5,000)	9.44 (20,000)	30.7 (65,000)	14.0 (32.0) (H_2SO_4) (H_2SO_4)	N.A. N.A.

[a] Based on exhaust data obtained from plant representatives and various source test reports. References 5, 6, 7, and 8.

[b] The grid casting facility consists of a furnace and a machine. Sometimes these elements are separate--such as where one furnace feeds many casting machines.

[c] For purposes of this study, it is assumed that plants making only 500 BPD (batteries per day) will not have PbO manufacturing facilities.

[d] The three-process operation consists of element stacking, lead burning, and battery casing.

[e] Measured at outlet of baghouse which is part of the process.

[f] Test data from outlet of fan separator tested at plant indicated <10 ppm H_2SO_4 (<0.017 gr/dscf); assuming control device was 99% efficient, uncontrolled emission approximates 1.6 gr/dscf.

[g] Tests made during this study only measured lead. However, other contaminants, such as bits of material from separators, cork from the mold release agent, and the like must be considered. It is estimated that lead constituted at least 50 percent of the total particulate matter.

ticed. The formation process does not contribute lead emissions.

4.2.2 Control Techniques

Grid casting furnaces and machines, paste mixers, plate dryers, reclaim furnaces, and parts casting operations can be controlled by low to medium-energy impingement and entrainment scrubbers. A pressure drop of 2 to 2.5 kPa (8 to 10 inches) W.G. and a liqui -to-gas ratio of 0.54 liter/m^3 (4 gal/10^3 ft^3) are common, yielding a control efficiency of 85 to 90 percent or higher.[8]

Grid casting machines, paste mixers, plate dryers, the three-process operation, and parts casting machine can be controlled by a pulse-jet fabric filter with a filtering velocity of 3 to 4 cm/s (6 to 8 fpm) yielding a control efficiency of 95 to 99 percent or higher.[8]

Alternatively, grid casting furnaces and machines, plate dryers, and parts casting machines are commonly uncontrolled. These processes are relatively minor sources of lead emissions.[8]

Lead oxide mills are controlled by automatic shaker-type fabric filters with filter velocities of 0.5 to 1.5 cm/s (1 to 3 fpm), yielding efficiencies of 99 percent or greater. These fabric filters are often preceded by cyclone mechanical collectors. The entire control system is con-

sidered product recovery equipment and not air pollution control.[8]

Waste material caught in the control systems is recycled to recover the lead content.

Table 4-2 summarizes viable control alternatives and associated control costs for new battery plants.

Preliminary results of a recent EPA test program[10] to develop lead emission standards for new battery plants are shown in Figure 4-5 and Table 4-3. Table 4-3 shows expected efficiency of well-designed and properly operated control devices for lead emissions emanating from various operations. Figure 4-5 indicates the average controlled emission concentration from these processes.

4.2.3 Control Costs

Table 4-2 summarizes the capital and annualized control costs estimated for three new model plant sizes. The capital costs represent the total equipment costs, including ductwork and installation. Annualized costs include operating and fixed costs. Capital costs for retrofitted equipment will be approximately 20 percent higher, and annualized costs will be from 10 to 12 percent higher.

Table 4-2. LEAD CONTROL TECHNIQUES AND ASSOCIATED COSTS FOR NEW LEAD-ACID BATTERY PLANTS

Alternative	Control Techniques[a]		Lead Control Efficiency (Percent)	Control Costs, 10^3 (1976)					
				500 BPD		2000 BPD		6500 BPD	
	Fabric filter[b]	Wet collector[c]		Capital	Annualized	Capital	Annualized	Capital	Annualized
I	A, B, F D	none	99.	173	41	233	67	428	122
II	B, C, E D	F	98.	192	48	247	74	413	122
III	C, E D	A, B, F	98.	160	38	211	63	365	108
IV	E D	F A, B, C	95.	191	48	237	71	378	115
V	E D	A, B, C, F	95.	158	38	202	61	335	102

[a]The letters refer to the following processes: A = grid casting furnace, B = grid casting machine, C = paste mixer, D = lead oxide mill, E = three-process operation (stacking, burning, casting), F = lead reclaim furnace.

[b]Pulse-jet (filtering velocity: 3 to 4 cm/s (6 to 8 fpm)) fabric filter on all processes; lead oxide mill (D) where automatic shaker type fabric filter (filtering velocity: 1 cm/s (2 fpm)) is employed. Control costs for lead oxide mill is a differential cost incurred by decreasing filtering velocity by 30 percent.

[c]Low energy impingement and entrainment scrubber; ΔP = 2 to 2.5 kPa (8 to 10 in. wg), and L/G = 0.5 liter/m^3 gas (4 gal/10^3 ft^3).

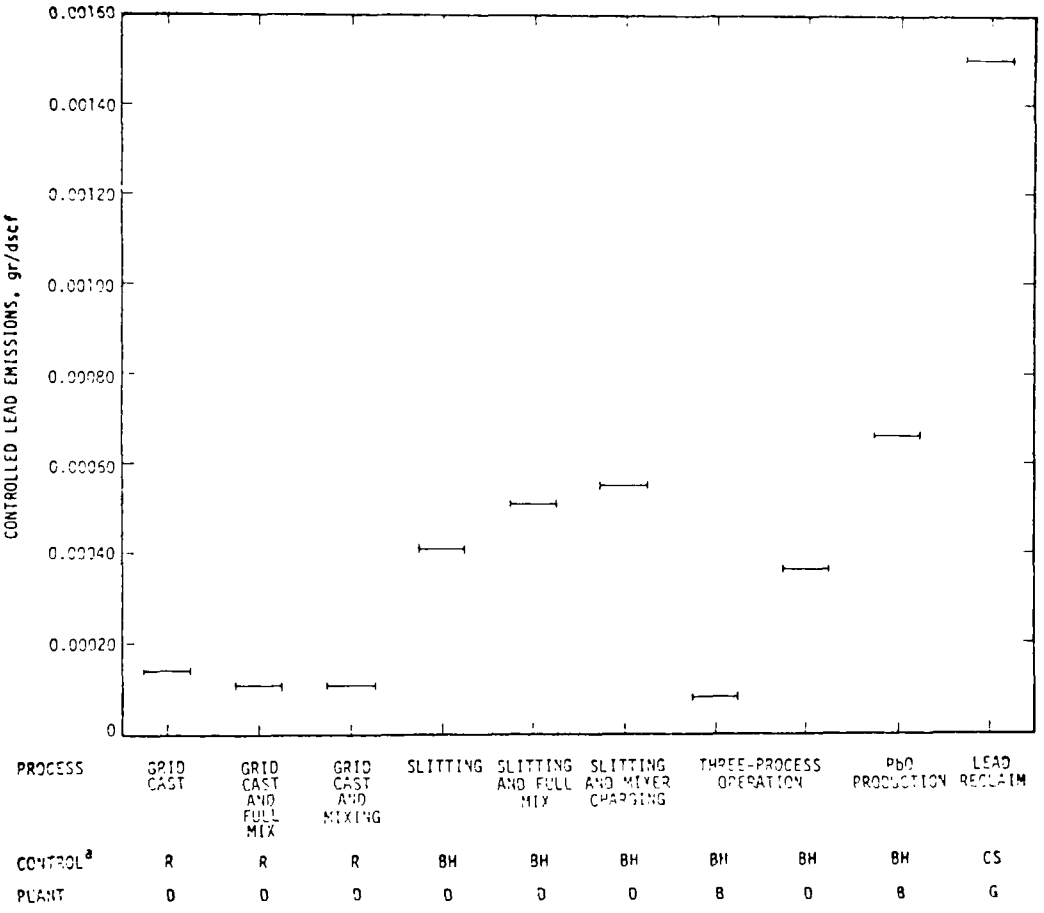

Figure 4-5. Average controlled lead emissions from tested facilities (gr/dscf).[10]

Table 4-3 LEAD REMOVAL EFFICIENCY FOR WELL-CONTROLLED PROCESSES[10]

Process operation	Control device	Lead removal efficiency, percent
Grid casting	Type-N rotoclone	94
Paste mixing cycle and grid casting	Type-N rotocolone	90
Paste mixing charging and plate slitting	Fabric filter	98
Three-process operation	Fabric filter	90
Paste charging and plate slitting	Fabric filter	98
Lead reclaim	Cascade scrubber	98

4.2.4 Impacts

A. Emission Reduction Benefits

The application of NSPS level controls are assumed to enable a plant to meet NAAQS for lead. Regardless of plant size, particulate emission reductions are estimated at 10 to 13 kg (23-28 lb) per thousand batteries produced, with a lead content of 50 percent by weight. Depending on the control strategy, this represents a reduction of uncontrolled particulate and lead emissions from 82 to 98 percent. With the production of nearly 55 million battery units, nationwide lead emissions can be reduced by only 350 Mg (390 tons), about 0.2 percent of the total lead emissions to the atmosphere.

B. Energy Impacts[10]

The process energy required for the operation of a large 6500 battery per day plant is about 60 GJ (60 MM Btu) per thousand batteries produced. An additional 0.4 GJ (0.4 MM Btu) per thousand batteries is required to operate SIP controls and 2.3 GJ (2.3 MM Btu) per thousand batteries to operate NSPS controls. These energy impacts represent increases of 0.7 percent (SIP) and 4.1 percent (NSPS).

The process energy required to operate a small, 500 bpd plant is about 220 GJ (220 MM Btu) per thousand batteries. The additional energy needed to operate SIP controls is

estimated at 0.9 GJ (0.9 MM Btu) per thousand batteries (a 0.4 percent increase). NSPS controls require about 3.3 GJ (3.3 MM Btu) per thousand batteries (a 1.5 percent increase).

C. Water Pollution Impact[10]

The increase of wastewater flow and pollutant loadings depends upon the control configuration. A plant with only fabric filter controls will cause an increase in wastewater generation. The typical wastewater flow from a battery plant is about 270 liters (70 gal) per battery. The lead content of this wastewater is less than 25 ppm. Lead loadings in the wastewater are about 11 kg (25 lb) per thousand batteries.

With the application of NSPS controls, the maximum increase in wastewater flow is 11 to 26 lpm (3 to 7 gpm) or about 1 to 3 percent more. Lead discharges may increase only 0.04 to 0.5 kg (0.09 to 1.0 lb) per thousand batteries, or about 0.4 to 5 percent.

D. Solid Waste Impact[10]

The only significant source of solid wastes in a battery plant is wastewater treatment when acid-lime neutralization is utilized. About 11 Mg (12 tons) of solid wastes are generated per thousand batteries.

By the application of NSPS controls the maximum impact on solid waste generation is estimated at 40 kg (80 lb) per thousand batteries of which 50 percent is lead. This amounts to an impact of only 0.3 percent.

4.2.5 References for Section 4.2

1. Breese, Frank. 1976 National Petroleum News Factbook. Mid-May 1976. p. 108.

2. 1973 Minerals Yearbook. Volume I-II. U. S. Department of the Interior. Bureau of Mines. Washington, D. C.

3. Lead Industry in October 1975. Mineral Industry Surveys. U. S. Bureau of Mines. U. S. Department of the Interior. Washington, D. C. October 1975.

4. Kulujian, N. Test No. 74-BAT-1, ESB, Inc. Milpitas, California, September 1973. PEDCo-Environmental Specialists, Inc. Cincinnati, Ohio. For U. S. Environmental Protection Agency. Contract No. 68-02-0237. Task 28. March 1974.

5. Screening Study to Develop Background Information and Determine the Significance of Emissions from the Lead-Acid Battery Industry. Vulcan-Cincinnati, Inc. For U. S. Environmental Protection Agency. Contract No. 68-02-0299. Task Order 3. December 4, 1972.

6. Confidential test data from a major battery manufacturer. July 1973.

7. Particulate and Lead Emission Measurements from Lead Oxide Plants. Monsanto Research Corporation. EPA Contract No. 68-02-0226. Task 10. August 1973.

8. Background Information in Support of the Development of Performance Standards for the Lead Acid Battery Industry. Interim Report No. 2. PEDCo-Environmental Specialists, Inc. Cincinnati, Ohio. For U. S. Environmental Protection Agency, Contract No. 68-02-2085. December 1975.

9. Trip Report. General Battery Corporation. Reading, Pennsylvania. By PEDCo-Environmental Specialists, Inc. Cincinnati, Ohio. For U. S. Environmental Protection Agency. Contract No. 68-02-2085. August 11, 1975.

10. Background Information in Support of the Development of Performance Standards for the Lead-Acid Battery Industry. Interim Report. No. 3. PEDCo-Environmental Specialists, Inc. Cincinnati, Ohio. For U. S. Environmental Protection Agency. Contract No. 68-02-2085. December 1976.

4.3 PRIMARY NON-FERROUS METALS PRODUCTION

A total of 2.32 Gg (2,552 tons) of lead emissions was generated in 1975 by production of primary non-ferrous metals. Lead emissions are estimated for the following sources: ore mining, crushing, and grinding, 493 Mg (544 tons); primary lead smelting, 400 Mg (440 tons); primary zinc smelting, 112 Mg (124 tons); and primary copper smelting, 1314 Mg (1444 tons).

4.3.1 Ore Mining, Crushing, and Grinding

Lead and zinc ores are normally deep mined, whereas copper ores are open-pit mined, chiefly in the far West. Lead, zinc, and copper occur in the ore in various amounts. If the metal content is high enough for economical extraction, the ore is listed as a mixed ore, i.e., lead-zinc, copper-lead. The 1974 output for the different ores is shown in Table 4-4. Lead emissions resulting from this activity are estimated at 493 Mg (544 tons).

4.3.1.1 Process Description - Lead, zinc, and copper ores are generally concentrated in a liquid medium using settling and flotation. The common form of the metal in the ore is in a mineral combination with sulfur and/or oxygen. Lead, zinc, and copper are usually mixed together in varying percentages. Depending on the amount of each of these

Table 4-4. LEAD EMISSIONS FROM ORE GRINDING AND CRUSHING OPERATIONS

Type of ore	Ore processed,[1] Tg	Ore processed,[1] (10^6 ton)	Pb content,[1,2,4] % wt	Particulate emissions,[4] g/kg	Particulate emissions,[4] (lb/ton)	% Uncontrolled	Suspended emissions, %	Suspended lead emissions, Mg	Suspended lead emissions, (tons)
Pb	8.46	(9.33)	5.1	3.0	(6.0)	25	25	81.0	(89.3)
Zn	5.98	(6.59)	0.2	3.0	(6.0)	25	25	2.0	(2.2)
Pb-Zn	1.82	(2.01)	2.0	3.0	(6.0)	25	25	6.0	(6.6)
Cu-Pb	0.75	(0.83)	2.0	3.2	(6.4)	75	10	4.0	(4.4)
Cu-Zn	0.74	(0.82)	0.2	3.2	(6.4)	75	10	Neg.	(Neg.)
Cu-Pb-Zn	59.3	(65.4)	2.0	3.2	(6.4)	75	10	284	(313)
Cu	242	(267)	0.2	3.2	(6.4)	75	10	116	(128)
							Total lead emissions, Mg (ton)	493	(544)

metals in the ore and on the potential economic return, the metals are either separated from the ore or discarded in the tailings.

The ore in underground mines is disintegrated by light-weight percussive and rotary percussive drilling machines. Power shovels, front-end loaders, scrapers, and mucking machines load the pulverized ore into electric or diesel-powered motorized trains operating on heavy-gage tracks, or into trackless shuttle cars. The ore is commonly run through a primary crusher underground and then conveyed by skip loader, rail tram, or conveyor belt (depending on mine depth) to the surface, where classifying and additional grinding occur. Figure 4-6 illustrates a typical ore crushing and grinding operation.

Lead and zinc ores are concentrated to 45 to 75 percent concentration before going to the smelter. Depending on the mineral form and gangue material, the ore is crushed and ground to a size based on an economic balance between the recoverable metal values and the cost of grinding. Standard jaw, gyratory, and cone crushers, vibrating or trommel screens, and rod and ball mills are used to reduce the ore to a powder in the 65 to 325 mesh range. Through gravity and/or selective flotation the finely divided particles of copper, lead and zinc are separated from the gangue and are cleaned, thickened, filtered, and dried.

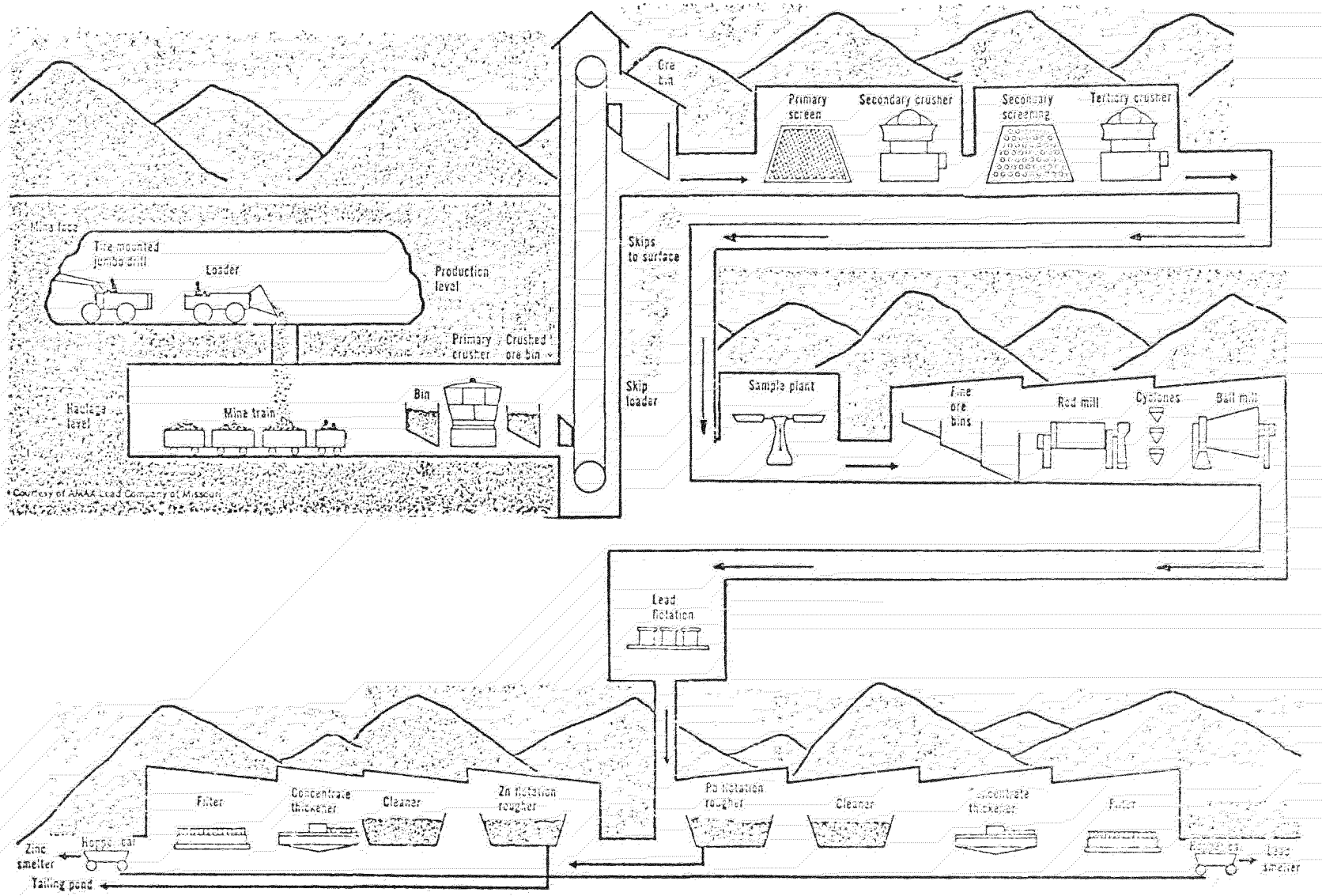

Figure 4-6. A typical ore mining and processing operation.[2]

About 89 percent of the copper ore mined in 1974 was from open pit mines; copper concentration in the ore ranges from 0.4 to 1.0 percent. The other 11 percent was extracted from underground mines, with copper content ranging from 1.0 to 4.5 percent. This ore is handled essentially the same as zinc and lead ores.[3]

Open-pit mining for copper, copper-lead, copper-zinc, and copper-lead-zinc ores is centered primarily in the far West in arid or semi-arid areas. The ore and gangue are loosened and pulverized by explosives, scooped up by power shovels or other mechanical equipment, and loaded into trucks, rail trains, or cars for transport to the concentrator. The ore is then processed in the same manner as lead and zinc ores.

4.3.1.2 Emissions - Lead emissions are basically fugitive, caused by drilling, blasting, loading, conveying, screening, unloading, crushing, and grinding. Underground mines contain the emissions from ore mining operations. Particulate emissions from open-pit mining are about 0.2 g/kg of ore handled (0.4 lb/ton). Transport and storage operations emit about 2.0 g/kg (4.0 lb/ton), and fugitive particulate emissions from crushing and grinding are about 1.0 g/kg (2.0 lb/ton).[4]

Because of the large particle sizes and high specific gravities (5.7 to 7.6) of emissions from this source, fall-out of the particulate matter occurs within a short distance of the point of emission.

4.3.1.3 Control Techniques - The primary means of controlling emissions from crushing and grinding operations are good mining techniques and equipment maintenance. Operations at the southeast Missouri lead belt located in the Clark National Forest region include a number of practices that minimize dust emissions. The ore is mined underground at depths of 210 to 370 m (700 to 1200 ft), and the truck loading operation is enclosed. The truck load itself is wetted or covered. The roads from mines to the concentrators are paved, the unloading area is sprinkled, and the crushing and grinding enclosures are well maintained to prevent leaks. The concentrates are stored under roof or wetted to prevent blowing, and the paved area around the concentrator drains into containment ponds. In 1974, this region furnished 85 percent of the mine-produced lead in the U.S.[2]

4.3.2 Primary Lead Production

In 1975, about 582 Gg of lead (642,000 tons) was produced by the primary lead industry. Total domestic consumption of lead was about 1.18 Tg (1.30×10^6 tons).[6] Primary lead smelting occurred at six locations.

Total particulate emissions resulting from primary lead production in 1975 are estimated at 1.136 Gg (1250 tons).[7] Assuming an average lead content of 35 percent in the particulates,[8,9,10,11,12] lead emissions amounted to 400 Mg (440 tons). This estimate does not include possibly significant fugitive dust emissions from mining, material transport, concentrators, furnaces, and ductwork. Emission estimates for the ore mining, crushing, and grinding phase are given in section 4.3.1.2.

4.3.2.1 Process and Emissions - The three major lead emission sources are sintering machines, blast furnaces, and dross reverberatory furnaces. Figure 4-7 illustrates typical processes and emission points in domestic primary lead smelters and refiners. Process and fugitive dust emissions are discussed separately where applicable.

A. Sintering:

Process - Sintering, the first pyrometallurgical process that is performed on all lead concentrates, serves the following functions:

1) Providing a feed with the proper ratio of lead, silica, sulfur, and iron for subsequent smelting operations.

2) Converting metallic sulfides into oxides and sulfates amenable to smelting.

3) Purifying the concentrate by volatilizing contaminants such as arsenic, tellurium, and antimony.

4) Producing a firm, porous clinger that is suitable for blast furnace smelting.

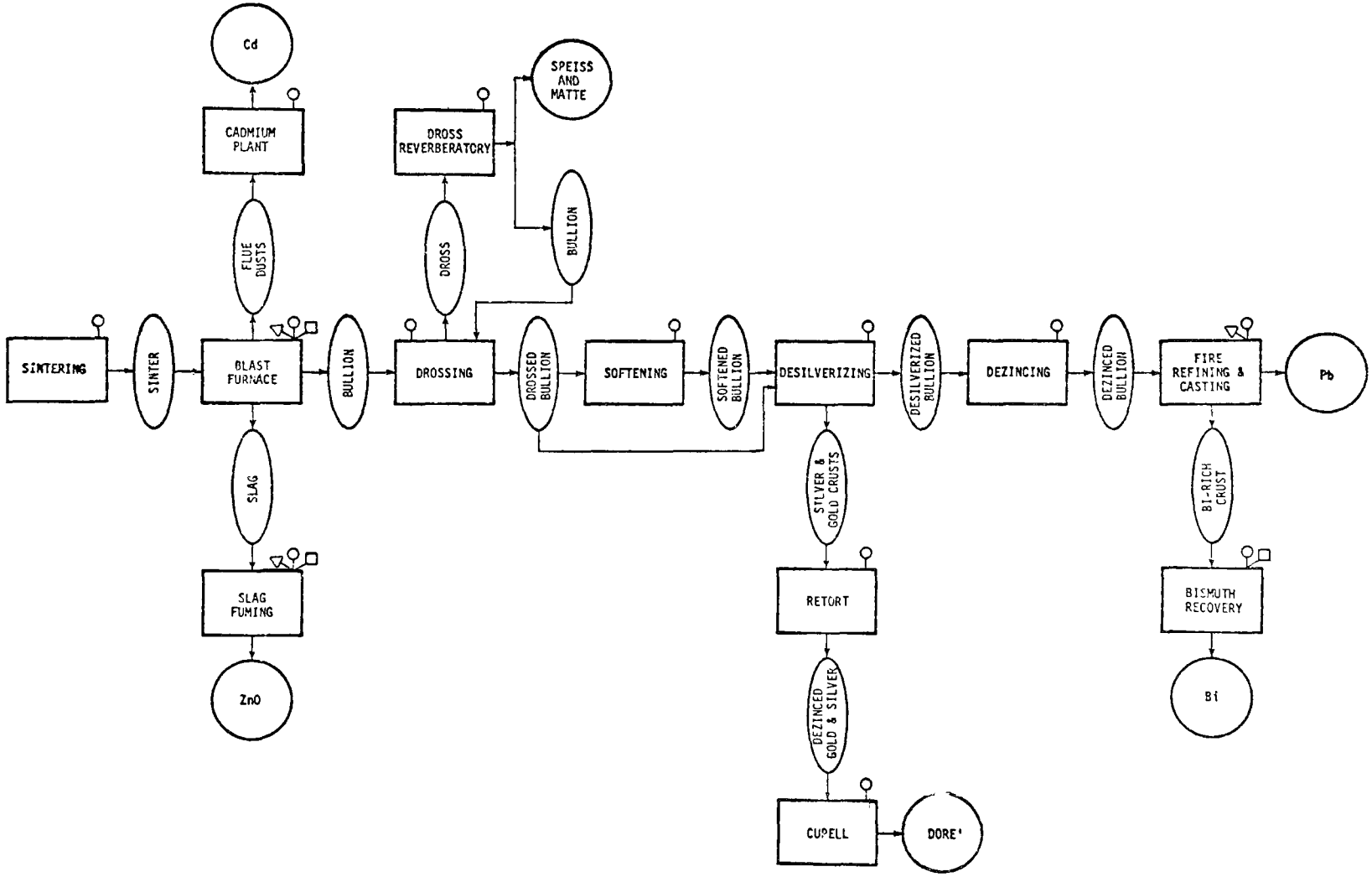

Figure 4-7. Flow diagram of primary lead smelter.

[Key: ○- air emission, △- wastewater discharge, □- solid waste]

In an updraft sintering machine, combustion air is passed upward, and in a downdraft machine, air is sucked downward through the charge. Only one primary lead smelter uses a downdraft sintering machine. Capacities range from 0.91 to 2.27 Gg (1000 to 2500 tons) per day. The bed area for a machine of 910 Mg (1000 ton) per day capacity is 2 m by 22 m (8 by 72 ft).[13,14] Figure 4-8 shows an updraft sintering machine.

Lead concentrates account for 30 to 35 percent of the input material for the sintering process. Approximately 83 percent of these concentrates, which contain 70 to 76 percent lead come from the new Missouri lead belt.[15,16] The remainder of the lead concentrates, from western and foreign sources, contain 45 to 60 percent lead.[16]

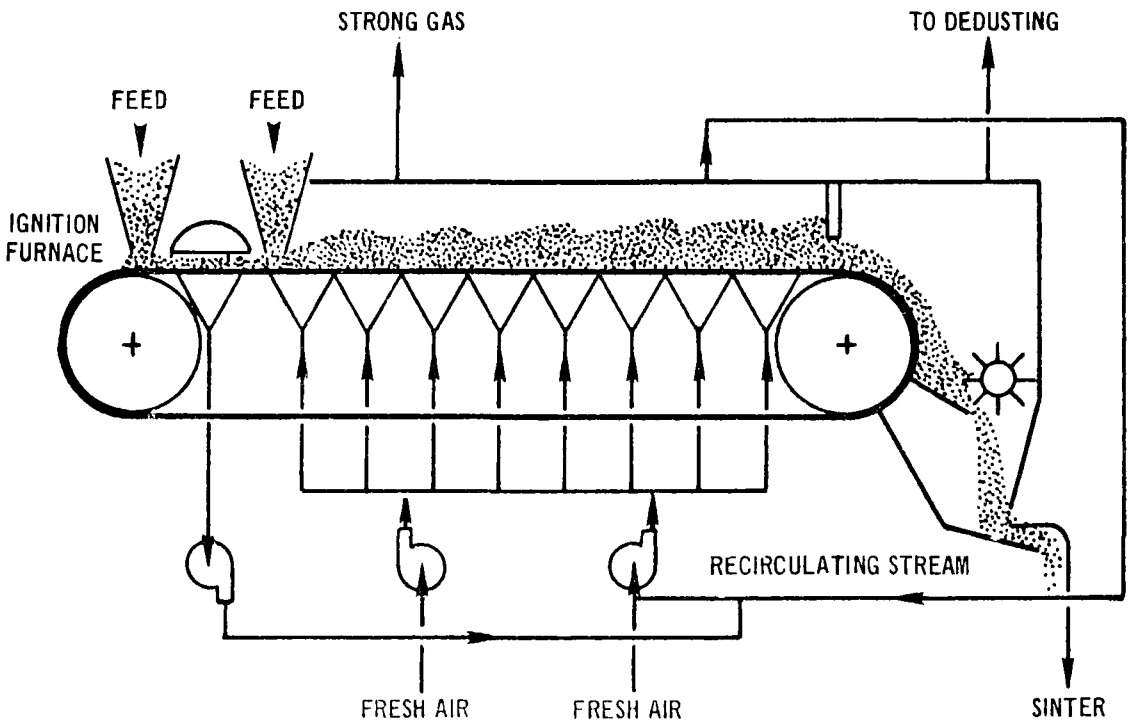

Figure 4-8. Lead updraft sintering machine.[7]

Emissions - The sintering machine is a major source of atmospheric emissions from primary lead smelters. Table 4-5 gives exhaust gas characteristics for this process.

A major gaseous constituent of sintering off-gas is SO_2. There are three methods of handling the gas streams, based on treatment of the SO_2. The simplest method is venting of all gases in a single stream. The second method segregates the gases that are formed in the front of the sinter machine from those that are formed toward the rear, producing a strong and a weak SO_2 gas stream. The third method also separates the gases into a strong and a weak SO_2 exhaust gas stream but continuously recirculates the weak stream through the sinter machine. The first method produces a stream with SO_2 concentration of less than 3 percent by volume. The strong and weak gas streams of the second method contain 6.5 percent and 0.5 percent SO_2, respectively. The third method produces an exhaust gas with an SO_2 concentration of 4 to 6 percent by volume.[7]

Published estimates of total particulate emissions and lead content vary considerably, usually with no indication of the type of sintering machine or gas venting system. The validity of these data is questionable. Lead content of the particulate emissions ranges from 20 to 65 percent.[8,9] On the basis of EPA emission factors, the lead emission factors range from 4.2 to 170 g/kg of lead product (8.4-340 lb/ ton).[8,9,18,19,20,21]

Table 4-5. CHARACTERISTICS OF UNCONTROLLED EXHAUST GAS FROM LEAD SINTER MACHINE

Parameters	Standard international units	English units	References
Gas flow rate[a]	1.1 $m^3/s \cdot Mg \cdot h^{-1}$ product	2200 scfm/tph product	10
Temperature[a]	650°C	1200°F	10
Grain loading	2-57. g/m^3	0.87-25 gr/scf	8, 9, 18
Particle size distribution	15-45%w < 20-40 µm 9-30%w < 10-20 µm 4-19%w < 5-10 µm 1-10%w < 5 µm		9
Lead content of particulate	20-65%w	20-65%w	8, 9
Emission factors[b]			
° particulate	21-260 g/kg Pb produced	42-520 lb/ton Pb produced	8,9,18,19,20,21
° lead	4.2-170 g/kg Pb produced	8.4-340 lb/ton Pb produced	

[a] Prior to dilution; temperature after dilution is approximately 200°C (400°F).

[b] Does not include fugitive dust emissions escaping control systems.

B. Blast Furnace:

Process - The blast furnace reduces the lead and removes undesirable impurities by formation of a slag. The resulting metal, called bullion, assays 94 to 98 percent lead and must be further treated before it is considered refined lead.[13] Figure 4-9 shows a typical blast furnace.

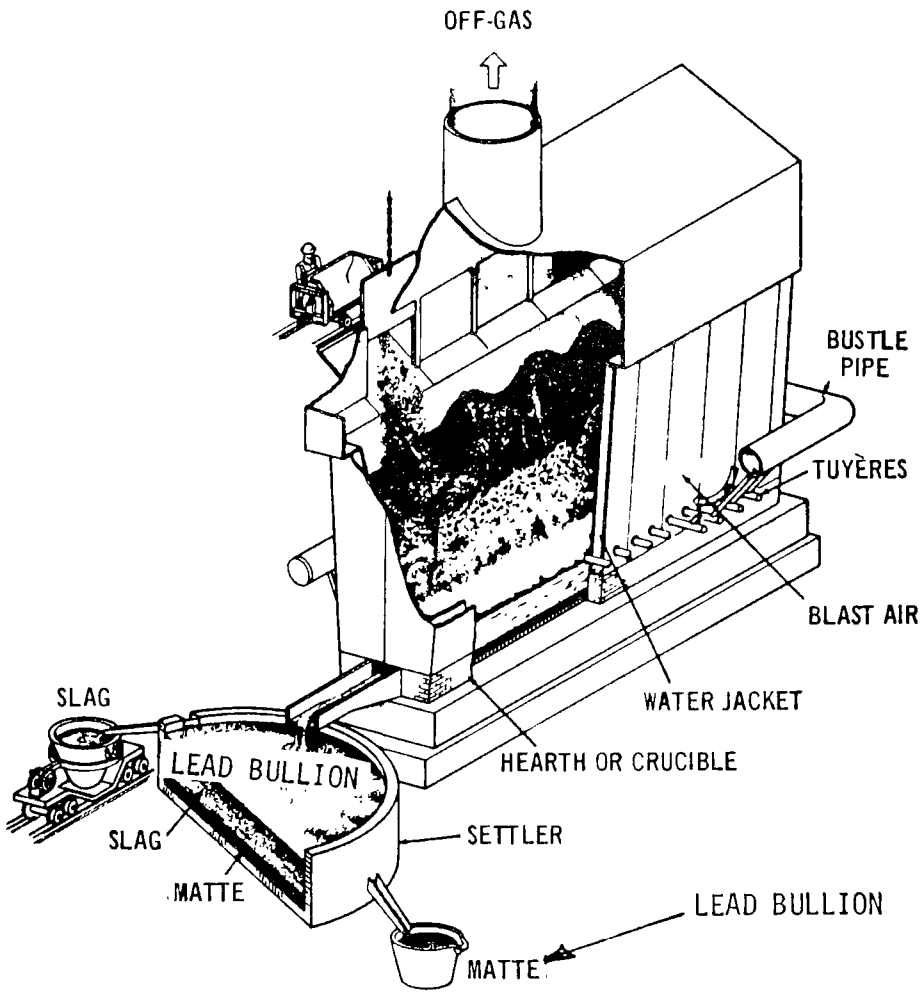

Figure 4-9. Lead blast furnace.[7]

Controlled air is blasted through side-mounted tuyeres into the charge to promote formation of metallic oxides. Some of the metallic impurities and fluxes form a slag composed predominately of iron and calcium silicates. Most of the metallic oxides are reduced in the presence of coke and carbon monoxide.

Three types of blast furnaces are used in the domestic industry. The conventional blast furnace is a water-jacketed shaft 4.9 to 7.3 m (16 to 24 ft) high and 3.7 to 6.1 m (12 to 20 ft) long; capacities range from 454 to 910 Mg (500 to 1000 tons) per day of charge. The Australian step jacket type is 7.60 m long and 10.40 m high (25 ft x 34 ft) and handles from 725 to 910 Mg (800 to 1000 tons) per day of charge. One smelter uses a Port-Pierre blast furnace with a capacity of 345 Mg (380 tons) per day of charge.[11,14]

The charge to the blast furnace includes sinter, coke, slags from drossing and refining processes, silica, limerock, and baghouse dusts. About 80 percent of the charge consists of sinter, which contains 28 to 50 percent lead, the higher percentages in sinter derived from the high-grade Missouri concentrates.[13]

Emissions - The lead blast furnace is another major source of atmospheric emissions from primary lead smelters. Table 4-6 presents characteristics of exhaust gas from this

Table 4-6. CHARACTERISTICS OF UNCONTROLLED, UNDILUTED EXHAUST GAS FROM A LEAD BLAST FURNACE

Parameters	Standard international units	English units	References
Gas flow rate	0.63 $m^3/S \cdot Mg \cdot h^{-1}$ product	1200 scfm/tph product	10
Temperature	595-705°C	1100-1300°F	8, 17
Moisture content	< 1% v	< 1% v	17
Grain loading	2-25 g/m^3	1-11 gr/scf	8
Particle size distribution	0.03 µm - 0.3 µm (majority)	0.03 µm - 0.3 µm (majority)	8
Lead content of particulate	10-40% w	10-40% w	12
SO_2 content	0.01-0.25% v	0.01-0.25% v	8, 17
CO content	25-50% v	25-50% v	8
Emission factors[a]			
° particulate	87-125 g/kg Pb produced	175-250 lb/ton Pb produced	8,17,20,21
° lead	8.7-50 g/kg Pb produced	17.5-100 lb/ton Pb produced	8, 17

[a]Does not include fugitive emissions escaping control systems.

process. Most of the sulfur originally contained in the lead concentrate is removed during sintering. SO_2 emissions from the lead furnace are approximately 0.01 to 0.25 percent by volume.[8,17] Because of the reducing atmosphere, carbon monoxide in the exhaust gas is 25 to 50 percent by volume.[8] Because of the high CO content, the exhaust gases require dilution to 9 to 15 times their volume to oxidize the CO to CO_2 and cool the gas to about 205°C (400°F).[10] The CO content of the diluted gas stream is about 2 percent by volume.[8,17] Mass particulate emissions are apparently unaffected by the type of blast furnace employed. The extremely small particle sizes reported result from condensation of volatile metal and oxide fumes.

Lead content of the particulate emissions ranges from 10 to 40 percent by weight.[12] A lead emission factor, developed on the basis of a particulate emission factor of 87 to 125 g/kg of lead product (175 to 250 lb/ton), is estimated at 8.7 to 50 g/kg (17.5 to 100 lb/ ton).[8,17,20,21] These estimates do not include fugitive emissions.

C. Dross Reverberatory Furnace:

Process - Dross is the solid scum removed during the drossing process, amounting to 10 to 35 percent of the bullion.[16] It contains many of the impurities found in bullion from the blast furnace such as copper, antimony, bismuth, arsenic, and lead. Lead typically constitutes 90 percent of the dross.[16] The function of the dross reverberatory process is

to remove this lead as a bullion and return it to the drossing process. This process is important for economical pyrometallurgical production of lead.

The dross reverberatory furnace is similar in construction to the reverberatory furnace used in copper smelting, but is smaller. A typical capacity is approximately 130 Mg of charge (140 tons) per day.[11]

Dross from the drossing process is the major input material. Fluxes such as silica, limerock, pig iron, and soda ash may be added. Sulfur, coke, and dusts collected by fabric filters are also part of the charge. The approximate lead content of the charge is 60 to 70 percent by weight.[11,13,16]

Emissions - The dross reverberatory process is a source of atmospheric lead emissions. Table 4-7 gives characteristics of exhaust gas from this process. Sulfur dioxide content of this gas stream is usually below 0.05 percent by volume.[8,17] There are considerable CO emissions due to the reducing atmosphere of the reverberatory furnace and the coke content of the charge. Although the literature gives no data concerning the size distribution of particulate emissions, they are believed to contain largely submicron-sized particles because of the temperatures incurred and the volatility of many of the components of the dross.

The lead content of the particulate emissions ranges from 13 to 35 percent by weight.[22,23] On the basis of

Table 4-7. CHARACTERISTICS OF UNCONTROLLED EXHAUST GAS FROM A LEAD DROSS REVERBERATORY

Parameters	Standard international units	English units	References
Gas flow rate	0.31 $m^3/m \cdot Mg \cdot h^{-1}$ product	600 scfm/tph product	1
Temperature	760-980°C	1400-1800°F	17
Moisture content	Negligible	Negligible	17
Grain loading	0.9-10 g/m^3	0.4-4.4 gr/scf	8
Particle size distribution	largely < 1 μm	largely < 1 μm	see text
Lead content of particulate	13-35% w	13-35% w	22, 23
Emission factors[a]			
° particulate	10 g/kg Pb produced	20 lb/ton Pb produced	8, 17
° lead	1.3-3.5 g/kg Pb produced	2.6-7 lb/ton Pb produced	
SO_2 emissions	< 0.05% v	< 0.05% v	8, 17

[a]Does not include fugitive emissions.

a particulate emission factor of 10 g/kg lead product (20 lb/ton) a lead emission factor is calculated as 1.3 to 3.5 g/kg of lead product (2.6 to 7.0 lb/ton).[8,17] These estimates do not include fugitive dust emissions.

4.3.2.2 Fugitive Dust[24]

Potential process fugitive emissions for primary lead smelters are shown in Figure 4-10 process flow diagram. The various types and sources of fugitive emissions are encircled and numbered. Some of the fugitive sources, along with the amounts of particulate and lead uncontrolled emissions, are shown in Tables 4-8 and 4-8a. The major causes of fugitive particulate emissions are sintering operations, lead ore concentrate handling and transfer, and zinc fuming furnace vents.

Table 4-8. ESTIMATES OF FUGITIVE DUST EMISSIONS FROM OPERATIONS AT ONE PRIMARY LEAD SMELTER[24]

Process	% by wt. Lead	Uncontrolled Particulate Emissions	
		g/kg	lb/ton
Ore concentrate storage	37	0.16	0.33
Return sinter transfer	19	2.25-6.75	4.5-13.5
Sinter sizes and storage	58	0.28-1.22	0.55-2.45
Sinter product dump area	31	0.0025-0.0075	0.005-0.015
Blast furnace roof vents	47	0.04-0.12	0.09-0.23
Blast furnace upset	27	3.5-11.5	7.0-23.0
Lead casting roof ducts	38	0.22-0.66	0.43-1.3
Zinc fuming furnace area	3	1.15-3.45	2.3-6.9

Table 4-8a. ESTIMATES OF FUGITIVE DUST EMISSIONS FROM OPERATIONS AT TWO PRIMARY LEAD SMELTERS[25]

Process	% Weight Lead	Uncontrolled Emissions (g/Kg)	Particulate lb/ton
Sinter building*	35	0.11	0.22
Blast furnace*	51	0.06	0.12
Ore storage*	47	0.015	0.3
Sinter building	10	0.205	0.41
Blast furnace	12	0.205	0.41
Dross reverberatory building	22	0.05	1.0
Zinc fuming building	10	0.025	0.05
Zinc furnace	9	0.055	0.11

* Data for one smelter - remaining data from other smelter

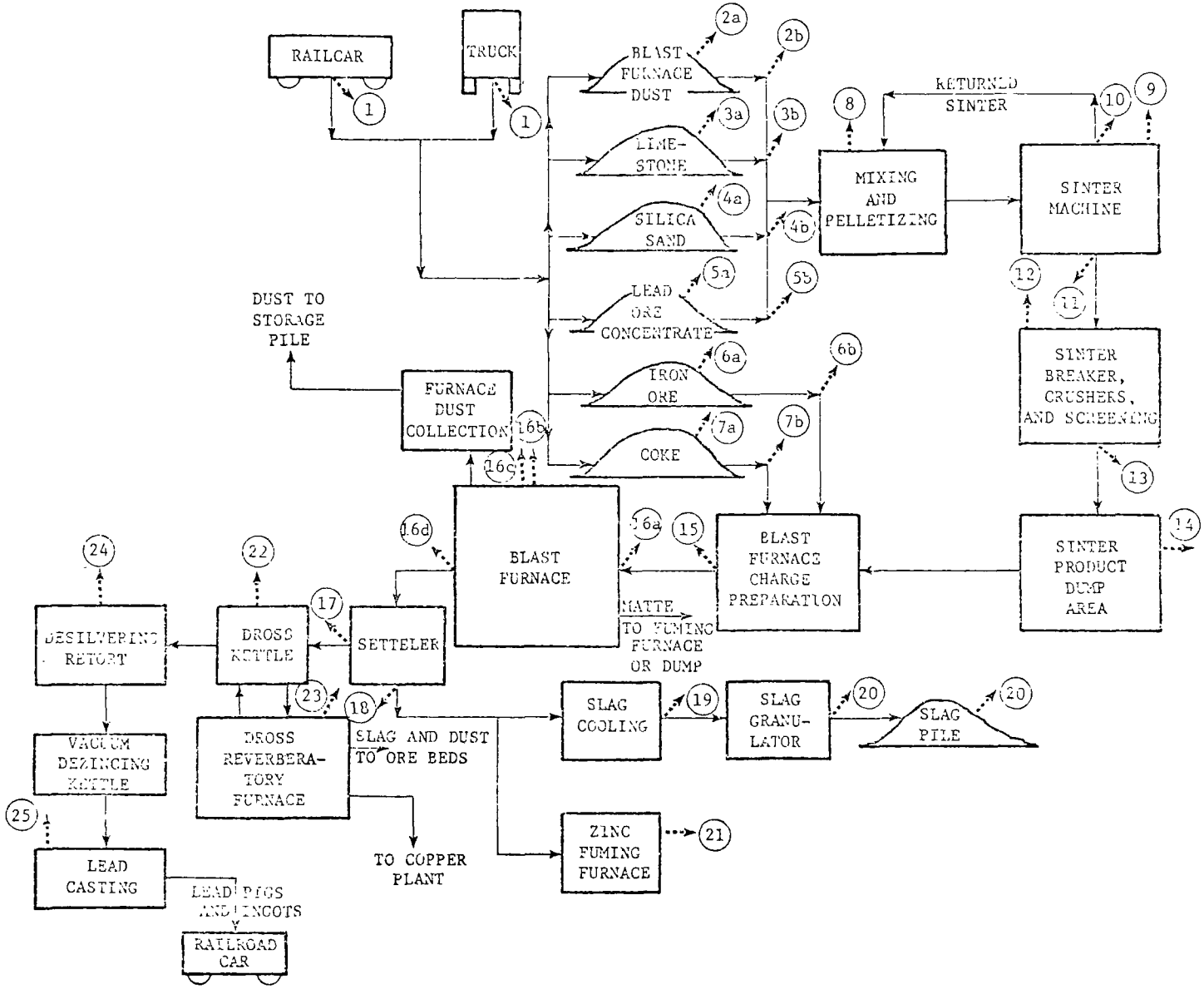

Figure 4-10. Process flow diagram for primary lead smelting showing potential industrial process fugitive particulate emission points.

Though no data are available on the fugitive size distribution, Table 4-9 shows the size distribution of flue dust from an updraft sintering machine effluent. There may be some resemblance between flue dust and fugitive dust.

Table 4-9

PARTICLE SIZE DISTRIBUTION OF FLUE DUST FROM UPDRAFT PRIMARY LEAD SINTERING MACHINE

Particle Size (μm)	Percent by Weight
20-40	15-45
10-20	9-30
5-10	4-19
<5	1-10

Particle fugitive emissions from the blast furnace consist basically of lead oxides, 92 percent of which are less than 4 μm in size.[26]

Information concerning fugitive particulate emission from lead dross reverberatory is unavailable; however, the following data for uncontrolled exhaust gas is presented since it may closely parallel fugitive emission characteristics. Particulates are largely less than 1 μm diameter, with lead content of 13-35 percent by weight. Exit temperatures are 760-980°C (1400-1800°F).[27]

Control techniques for fugitive particulate and lead emissions consist of wet suppression or enclosure for the storage, handling, and transfer of raw materials, and better control of operating parameters for the sinter operation, reverberatory furnace, and blast furnace.

A more detailed account of particulate fugitive emission factors for primary lead smelters is available in the draft EPA Guidelines for Fugitive Emissions.[24]

4.3.2.3 Control Techniques

A. Contact Sulfuric Acid Plants: Contact sulfuric acid plants provide one means of SO_2 control for sintering and blast furnaces. Because most particulate matter has the adverse effect of deactivating the catalyst used to convert SO_2 to SO_3, complete removal of particulates is required prior to an acid plant. If complete removal is not achieved, the absorbing acid will entrap any remaining particulates and the exhaust gases will contain no particulate lead emissions.[13] Figure 4-11 illustrates the material flow through an acid plant.

Concentrated SO_2 gas streams are generally amenable to contact acid production.[7] Three U. S. smelters operate acid plants and practice gas separation; a fourth smelter is planning to construct an acid plant. The weak SO_2 gas stream from these smelters joins the blast furnace gases for treatment in baghouses. New source performance standards, however, are based on recirculating the weak SO_2 stream and

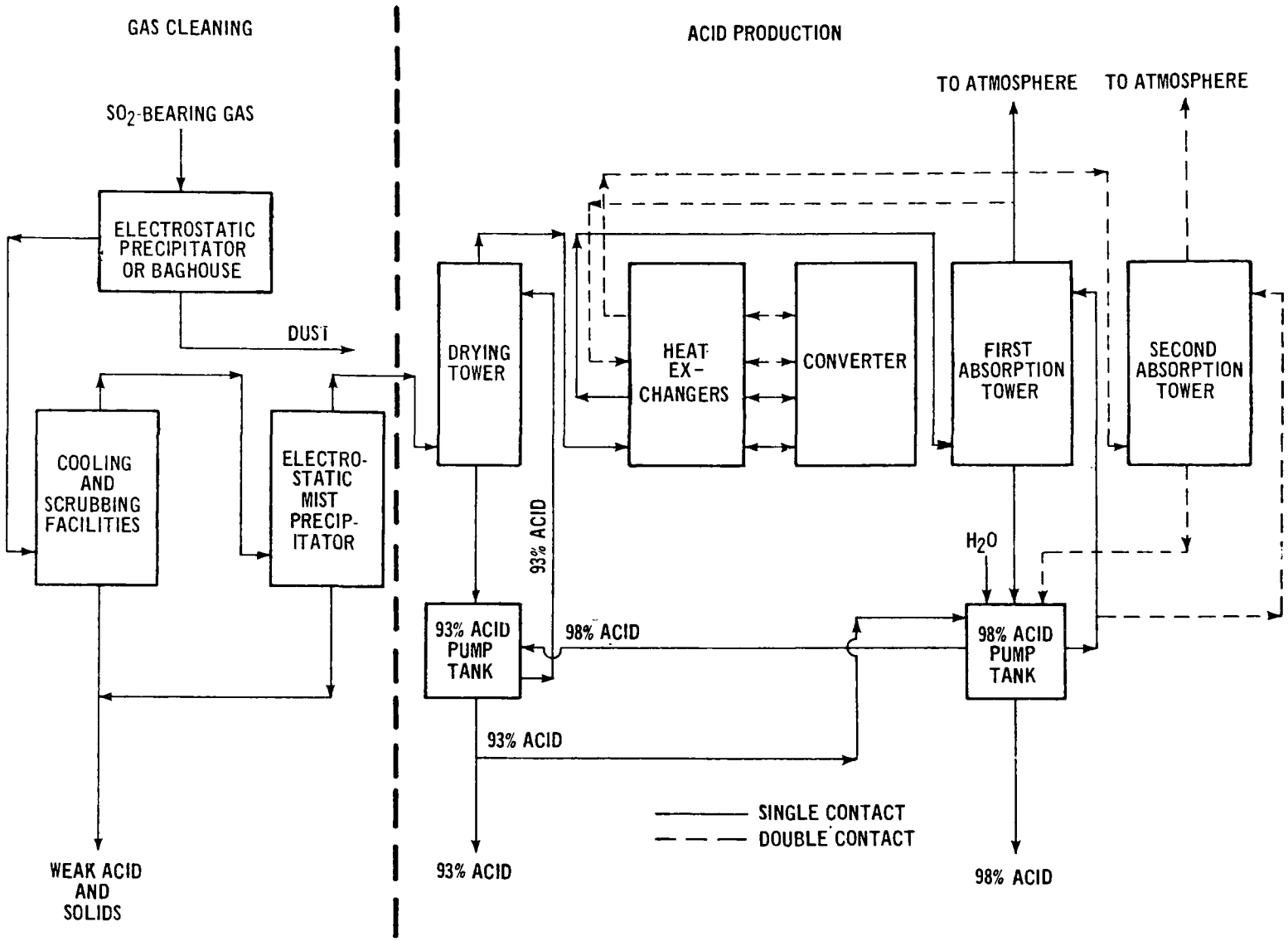

Figure 4-11. Sulfuric acid plant installed on a primary lead smelter.[7]

treating the entire sinter machine effluent in an acid plant. Strong SO_2 gas streams represent 25 to 60 percent of the total gas volume exiting from a sintering machine.[7]

B. Wet Collectors: Gas cooling, humidification, and secondary removal of submicron particles are accomplished with wet scrubbers when acid plants are used to control SO_2. High-energy scrubbers of the venturi type are constructed of 316-stainless steel.

High-energy wet scrubbers collect and remove particulate matter by means of water sprays. A high velocity is imparted to the gas stream while it is injected with water to cause more turbulence and liquid-solid contact. Collection efficiencies up to 99.5 percent are achieved with pressure drops of 15 kPa (60 in. H_2O).[19]

Dust collection is accomplished by increasing the size of the particles by combination with liquid droplets and entrapment in a liquid film. The major factors influencing collection efficiency are particle size, particle density, turbulence, and liquid-to-gas ratio. The first two factors are properties inherent in the particles, whereas the latter two are directly related to the degree of contact between particles and liquid.

C. Fabric Filters: Fabric filters are used extensively in the industry for particulate control. Presently the exhaust gases from all blast furnaces, dross reverberatory furnaces, and weak and unseparated gas streams from sintering machines

are treated in fabric filters. Sometimes several fabric filters are placed in parallel to handle combined gases from several processes. The blast furnace gases are usually combined with dross reverberatory exhaust and also, if an acid plant is present with the weak stream from the sintering machine. Single gas streams from the sintering machines that are not recirculated are treated by a separate baghouse because of the high volume. Only one smelter operates an ESP for this gas stream.[7] Baghouses usually can achieve efficiencies of 99 percent or higher on these applications.

The fabric materials impose a maximum temperature limitation of 285°C (545°F).[19] There is also a minimum temperature limitation of 130 to 140°C (265 to 285°F) due to the acid dew point.[19] The temperature of the gases at the baghouse inlet is usually maintained at designated levels by use of waste heat boilers, spray chambers, or dilution air.

Fabric filters usually consist of tubular bags made of woven synethetic fiber or fiberglass. The particles are removed from the gas stream by the impact and filtering action of the fibers. The dust retained on the bags is periodically shaken loose and collected in hoppers below the bags.

Fabric filters operate at a pressure drop from 0.3 to 1.5 kPa (1 to 6 in. H_2O). The amount of filter area required is determined by the recommended superficial filter velocity of 0.8 to 1.5 cm/s (1.5 to 3.0 fpm).[19]

The blast furnace and dross reverberatory furnace baghouse at a primary lead smelter in Glover, Missouri, was tested. The smelter has a design capacity of 81,800 metric tons (90,000 tons) of lead per year.

The blast furnace is an Australian step jacket design with a nominal capacity of 273 megagrams (300 tons) of lead bullion per day. The furnace is 7.6 meters (8.3 yards) long, 1.5 meters (1.64 yards) wide at the lower tuyeres, and 3.0 meters (3.28 yards) wide at the upper tuyeres. A blower provides up to 510 cubic meters per minute (18,000 ft^3/min) of air at 0.26 kg/cm^2 (0.76 lb/in^2) pressure to the furnace. The top of the furnace, where charging takes place and effluent gases are ducted to the control system, is of typical thimble-top design.

Charge materials for the furnace consist of coarse sinter, iron, coke, and caustic skims. Charging usually occurs 17-18 times per shift. Effluent gases from the blast furnace, swivel vibrator (transfer of sinter to storage bins), Ross classifying rolls, dross kettles, Roy tapper, slag granulator, lead tap, slag taps and feed hopper drop points are exhausted to the blast furnace baghouse control system. The baghouse control system consists of a humidifying chamber, fresh air inlet, lime addition system, and a baghouse.

The ASARCO-designed baghouse is enclosed in a concrete structure containing 6 compartments and is of the pressure

type. Each compartment contains 204 wool bags. The inlet flow rate to the baghouse is 3710 m^3/min (131,000 acfm) at 58.3°C (137°F). Lime is added between the water spray chamber and the baghouse to aid in the collection efficiency and to retard ignition of the collected dust.

The filter bags are cleaned by mechanical vibration. The compartment dampers remain closed for approximately 20 seconds after cleaning to allow particulates to settle. Compartments are cleaned on a rotation basis when the pressure drop across the baghouse exceeds 0.8 kPa (3 in. W.G.).

Table 4-10 shows the results of the testing and indicates fabric filter performance on blast and dross reverberatory furnaces.

D. Electrostatic Precipitators: One primary lead smelter uses an electrostatic precipitator (ESP) on its single sintering exhaust gas stream. Careful operation of a well-designed ESP can yield efficiencies exceeding 99 percent, but measured efficiencies may be considerably lower.[7,11,19]

Electrical resistivity of the particles, especially lead oxide particles, must be considered in evaluating precipitator performance. Resistivity of lead dusts usually exceeds the maximum 10^{10} ohm-cm designed for electrostatic precipitation. Increasing the amount of gas conditioning agents, such as moisture or sulfur trioxide, decreases resistivity.[28]

Efficiency of the ESP decreases dramatically with

particles smaller than 1 to 2 μm diameter, a size that corresponds remarkably well with the vast majority of sublimed particles. Lead and particulate collection efficiencies may not be the same. Nonuniform gas flows also reduce ESP efficiency. Gas velocities at the electrode plates should range from 0.9 to 4.6 m/s (3 to 15 fps). Inlet temperatures lower than 232°C (450°F) reduce the efficiency of high-temperature ESP's; temperatures above 450°C (840°F) cause volatilization of some metallic oxides and salts in the gas stream and may damage components of the ESP.[19]

Table 4-10. PERFORMANCE OF BLAST FURNACE AND DROSS REVERBERATORY FURNACE BAGHOUSE[7]

Run	1	2	3	Average
Lead production rate, Mg/h (tons/hr)	12.6 (13.9)	12.5 (13.8)	12.5 (13.8)	12.5 (13.8)
Stack effluent:				
Total flow rate, dscm/min. (dscfm)	3970 (139,000)	4480 (154,000)	4240 (146,000)	4230 (146,000)
Temperature, °C (°F)	56.2 (159)	63.7 (172)	64.2 (173)	61.4 (168)
Particulate emissions:				
mg/dscm (gr/dscf)	38.9 (0.0170)	18.4 (0.00807)	40.4 (0.0177)	32.1 (0.0141)
mg/m^3 (gr/acf)	31.8 (0.0139)	15.3 (0.00671)	33.3 (0.0146)	26.5 (0.0116)
kg/hr (lb/hr)	9.17 (20.2)	4.86 (10.7)	10.1 (22.3)	8.04 (17.7)
kg/Mg of product	0.73 (1.60)	0.39 (0.86)	0.81 (1.78)	0.64 (1.42)

4.3.2.4 Control Costs - The model plant cost analysis is based on an average-sized, 90,700 Mg/yr (10^5 TPY) primary lead smelter. Two separate control systems are evaluated - one system for the sintering operation and one for the blast and reverberatory furnaces. Sintering control costs include only weak-stream control.

A. Sintering - The capacity of the sintering operation is sufficient to produce enough sinter for the total plant to produce 13.6 Mg/h (15 tph) of lead product. The operation generates 48.9 m^3/s at 650°C (103,000 acfm at 1200°F) and emits 3550 kg/h (7800 lb/hr) of uncontrolled particulate matter, with up to 65 percent lead by weight. These gases (weak-stream only) enter a balloon flue to collect large particles. A spray chamber cools the gases from 540°C to 200°C (1000°F to 400°F) before they enter an insulated fabric filter. The fabric filter is a mechanical shaker-type designed to handle a flow rate of 31.6 m^3/s at 200°C (67,000 acfm at 400°F) for a filtering velocity of 1 cm/s (2 fpm). The 80-hp fan system is rated at 31.6 m^3/s (67,000 acfm) at a system pressure drop of 1.1 kPa (4.5 in. W.G.).

Capital costs are estimated at $1.57 million, including the fabric filter, insulation, balloon flue, spray chamber, fan system, and ductwork.[a]

Annualized costs are estimated at $482,000, including utilities, maintenance, labor, overhead, and fixed costs

[a] See Section 2.9 and Appendix B for discussion of cost analyses. Detailed cost studies are available from EPA upon request.

(with capital recovery). The collected dust is recycled through the process; however, no credit is applied against the annual costs. Annual operating time is assumed at 5760 hours. Total annual labor hours is assumed to be 2880 hours.

The capital and annualized costs are expressed below in terms of exhaust volume and annual labor hours:

S.I. units

$$\text{Capital, } \$ = 1.53 \times 10^5 V^{0.6}$$

$$\text{Annualized, } \$ = 339V + 19.6H + 3.98 \times 10^4 V^{0.6}$$

$V = m^3/s$ at 650°C
H = annual labor hours

$16 < V < 150$
range

English units

$$\text{Capital, } \$ = 1.54 \times 10^3 Q^{0.6}$$

$$\text{Annualized, } \$ = 0.16Q + 19.6H + 402Q^{0.6}$$

Q = acfm at 1200°F
H = annual labor hours

$34{,}000 < Q < 310{,}000$
range

B. Blast and Reverberatory Furnace - The blast furnace and dross reverberatory furnaces produce 13.6 Mg/h (15 tph) of lead product. The blast furnace generates 8.5 std. m^3/s

exhaust gases at 1200°C (18,000 scfm at 2200°F). The gases are diluted with ambient air to 100 m^3/s at 200°C (211,000 acfm at 400°F). This stream combines with the dross reverberatory gases. The reverberatory furnace generates 4.2 std. m^3/s at 815°C[10] (9000 scfm at 1500°F) exhaust gas which is cooled to 200°C (400°F) by a spray tower. The combined gases, containing 1820 kg/h (4000 lb/hr) particulate, enter an insulated mechanical shaker fabric filter which is designed to handle 110 m^3/s at 200°F (232,000 acfm at 400°F) at a filter velocity of 1 cm/s (2 fpm). The lead content of the particulate ranges from 20 to 40 percent. The 400-hp fan system provides adequate suction at a system pressure loss of 1.1 kPa (4.5 in. W.G.). This system is capable of meeting a typical state particulate emission regulation of about 12 kg/hr (25 lb/hr).

Capital costs are estimated at $2.91 million, including fabric filter, insulation, spray tower, fan system, and ductwork.[a]

Annualized costs are estimated at $993,000, including utilities, labor, maintenance, overhead, and fixed costs (with capital recovery). Collected dust is recycled through the process. Annual operating time is assumed at 8000 hours. Total annual labor hours is assumed to be 4200.

Capital and annualized costs are expressed below in terms of combined exhaust volume and annual labor hours:

---

[a] See Section 2.9 and Appendix B for discussion of cost analyses. Detailed cost studies are available from EPA upon request.

S.I. units

Capital, $ = $1.74 \times 10^5 V^{0.6}$

Annualized, $ = $178V + 19.6H + 4.54 \times 10^4 V^{0.6}$

V = m^3/s at 200°C
H = annual labor hours

$34 < V < 330$
range

English units

Capital, $ = $1760\ Q^{0.6}$

Annualized, $ = $0.084Q + 19.6H + 459Q^{0.6}$

Q = acfm at 400°F
H = annual labor hours

$80{,}000 < Q < 700{,}000$
range

4.3.2.5 Impacts

A. Emission Reduction Benefits

Based on the fabric filter system serving the model plant sintering machine and blast/reverberatory furnaces, a 400 kg/Mg (800 lb/ton) reduction in particulate emissions is estimated. The lead content of the sintering system catch is 65 percent, and 20 to 40 percent of the blast/reverb system.

B. Energy Impact

For the model processes it is estimated that air pollution control to achieve SIP limits would require about 0.18 GJ/Mg (0.18 MM Btu/ton) of lead product. The total process energy required is 19.2 GJ/Mg (19.2 MM Btu/ton) of product.[29] Therefore, about 1 percent increase in energy consumption is expected.

C. Water Pollution Impact

Wet collectors are never used on these processes. Little or no wastewater is generated in the fabric filter and ESP applications. Therefore, no impact on water pollution can be attributed to lead control.

D. Solid Waste Impact

Dusts collected by fabric filters and ESP's are recycled. Therefore, no solid waste impact will occur.

4.3.3 Primary Zinc Production

Estimated production of primary slab zinc in 1975 was 397 Gg (438,000 tons). Estimated zinc consumption was 837 Gg (925,000 tons). The difference between primary production and consumption was made up by imports of 344 Gg (380,000 tons), secondary redistilled slab zinc production of 52.4 Gg (58,000 tons), and reduction in stocks.[30] The 1975 lead emissions from primary zinc production were about 112 Mg (124 tons). Zinc smelters are in operation at 6 locations.

4.3.3.1 Process and Emissions - A flow diagram illustrating primary zinc production is given in Figure 4-12. Ore concentrate from a mill is first roasted to remove sulfur. The lead content of zinc concentrates varies widely. One plant has reported concentrations of 0.30 to 0.50 percent lead, but at other plants the lead content may run as high as 2 to 5 percent.[31] The amount of lead subsequently released to the atmosphere is highly dependent on initial ore concentration. The waste gas stream from roasting is used as feed to a sulfuric acid plant. The roasted product is further processed by pyrometallurgical or electrolytic methods. The first step in pyrometallurgical processing is sintering,

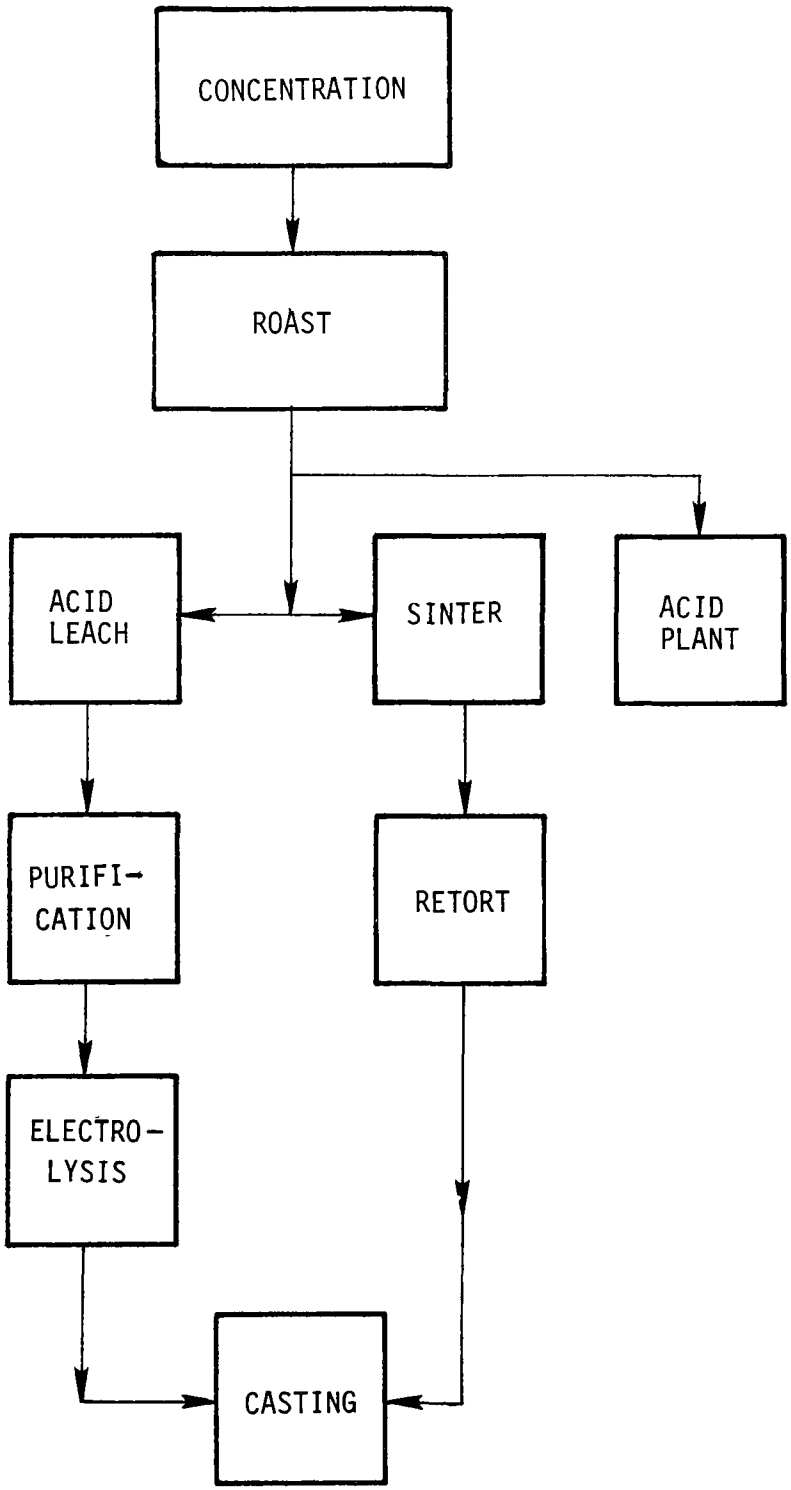

Figure 4-12. Flow diagram of primary zinc production.

which prepares the roasted calcine for introduction into a retort furnace, where it is reduced to zinc metal. Three types of retorts are in use at primary zinc smelters - horizontal, vertical, and electrothermic.

In electrolytic processing, the roasted concentrate is first leached in sulfuric acid to dissolve the zinc, then purified by various filtration and precipitation steps before recovery of metallic zinc by electrolysis.

No estimates are given for particulate emissions from electrothermic retorting, although the total emissions from the only zinc plant using such furnaces are much lower than those from the other types of retorts. During the roasting stage, modified Nichols-Herreshoff furnaces are used for deleading, eliminating 90 to 95 percent of the lead.[31] Because virtually all of the remaining lead is removed during sintering, lead emissions from electrothermic retorts are thought to be negligible.

The only significant sources of particulate and lead emissions are sintering and horizontal and vertical retorting. At all smelters, the off-gas from roasting is used as feed to a sulfuric acid plant after preliminary cleaning in cyclones and electrostatic precipitators. Atmospheric lead emissions from acid production are negligible.[7] The lead which is volatized during roasting ends up in the residues from the gas cleaning and acid manufacturing phases.

Electrolysis does not cause significant atmospheric emissions of particulate or lead. The use of electrolyte covers and additives to control misting allows only negligible lead emissions from this process.

Six primary zinc plants were operating in the U. S. at the end of 1975, with a total annual production capacity of 590 Gg (652,000 tons). Three of the plants (58 percent of total capacity) are pyrometallurgical and three are electrolytic. The 1975 primary zinc production was only about 66 percent of installed capacity.[30]

A. Sintering:

Process - Sintering volatilizes lead and cadmium impurities and creates a hard, porous mass suitable for introduction into the retort. Dwight-Lloyd sintering machines are used at primary zinc smelters. These are downdraft machines using bar or grate-type pallets which are joined to form a continuous metal conveyor system. The roasted concentrate is distrubuted and ignited on the pallets along with recycled sinter product, coke or oil, sand, and other ingredients. The machines operate at atmospheric pressure at a temperature of 1040°C (1900°F).[8] Figure 4-13 depicts a typical downdraft sinter machine. The largest U. S. primary pyrometallurgical smelter operates nine sinter machines.[8]

Emissions - Table 4-11 presents selected exhaust gas parameters for sinter machines. In addition to lead, the parti-

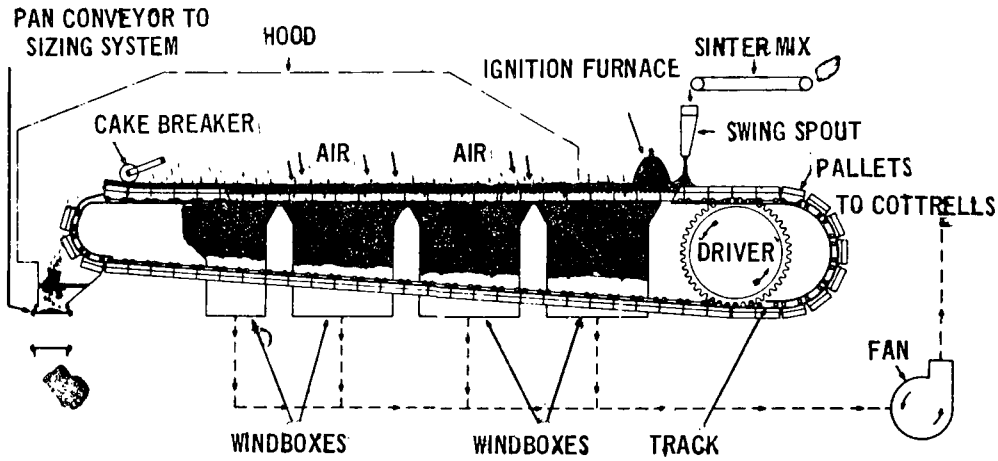

Figure 4-13. Downdraft sinter machine.[7]

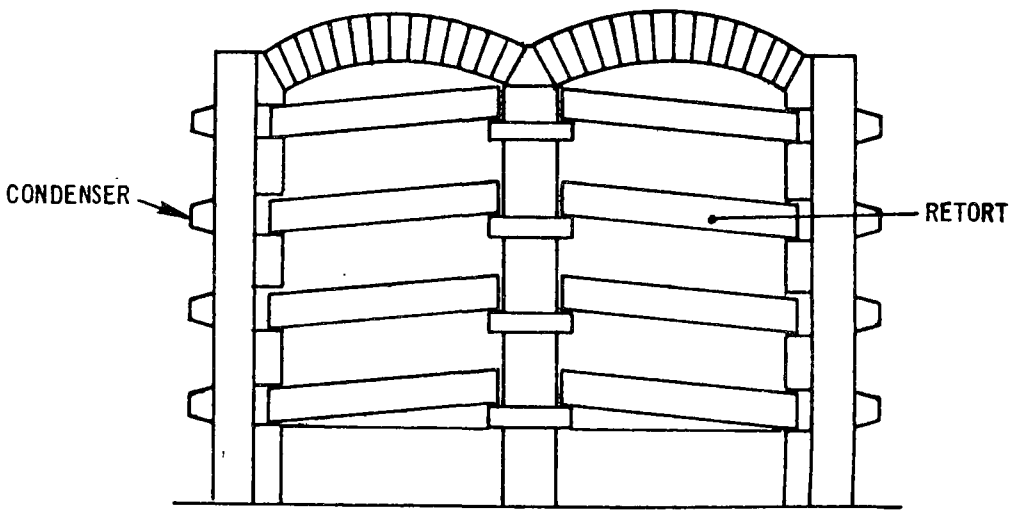

Figure 4-14. Horizontal retort.[7]

Table 4-11. CHARACTERISTICS OF UNCONTROLLED EXHAUST GAS FROM A ZINC SINTER MACHINE

Parameters	Standard international units	English units	References
Gas flow rate	1.2-2.7 $m^3/s \cdot Mg \cdot h^{-1}$ product	2300-5200 scfm/tph product	8, 33
Temperature	95-370°C	200-700°F	8, 34
Grain loading	0.9-10.3 g/m^3	0.4-4.5 gr/scf	8
Particle size distribution	100% < 10 μm	100% < 10 μm	8
Lead content of particulate	30-55% w	30-55% w	8
SO_2 emissions	4.5-7% v	4.5-7% v	8
Dew point	50-60°C	122-140°F	8
Emission factors			
° particulate	45 g/kg product	90 lb/ton product	35
° lead	13.5-25 g/kg product	27-50 lb/ton product	

culates are composed of 5 to 25 percent zinc, 2 to 15 percent cadmium, and 8 to 13 percent sulfur.[8] All of the particulates are less than 10 μm in size. The lead content of particulate following control is taken as 10 percent, based on values of 11 percent in the literature[35] and 9 percent measured in emissions at one smelter.[36] The lead content of the particulate before control has been reported to range from 30 to 55 percent by weight.[8]

Total lead emissions from sintering are shown in Table 4-12 based on estimated 1975 production levels and emission factors from the literature. A total of 84 Mg (93 tons) of lead was released from sinter machines at primary zinc smelters.

Table 4-12. LEAD EMISSIONS AT ZINC SINTER MACHINES

Type of plant	Estimated 1975 zinc production, Gg	(1000 tons)	Lead emission factor,[7,35] g/kg	(lb/ton)	Lead emissions, Mg	(tons)
Electrothermic retort	141	(156)	0.28	(0.56)	40	(44)
Horizontal retort	28	(31)	0.33	(0.66)	9	(10)
Vertical retort	64	(71)	0.54	(1.10)	35	(39)

B. Retorting:

Process - Horizontal retorting is the oldest process now in use for reducing calcine to zinc metal. The furnace consists of a series of tubular refractory receptacles placed horizontally within an enclosure, with the retort face exposed to the atmosphere. A condenser is placed over the retort face. Firing is external, achieved by passing combustion products through the areas between the retorts. The temperature inside the retort reaches 1200°C (2200°F).[37] Figure 4-14 is a diagram of a typical horizontal retort. The National Zinc Company plant, the only facility using this process, operates 5824 horizontal retorts with a total capacity of 127 Mg (140 tons) per day of zinc product.[7] This plant is being replaced by an electrolytic plant of about the same capacity.

The vertical retort is also externally fired. The charge passes downward through a central shaft and is expelled from the bottom of the furnace. Molten zinc is condensed from the vapor created by reduction of the charge. Operating temperature is 1315°C (2400°F).[38] Figure 4-15 is a diagram of a vertical retort. The New Jersey Zinc Co. plant, the only facility using this reduction process, operates 43 vertical retorts with a total capacity of 286 Mg (315 tons) of zinc product per day.[7]

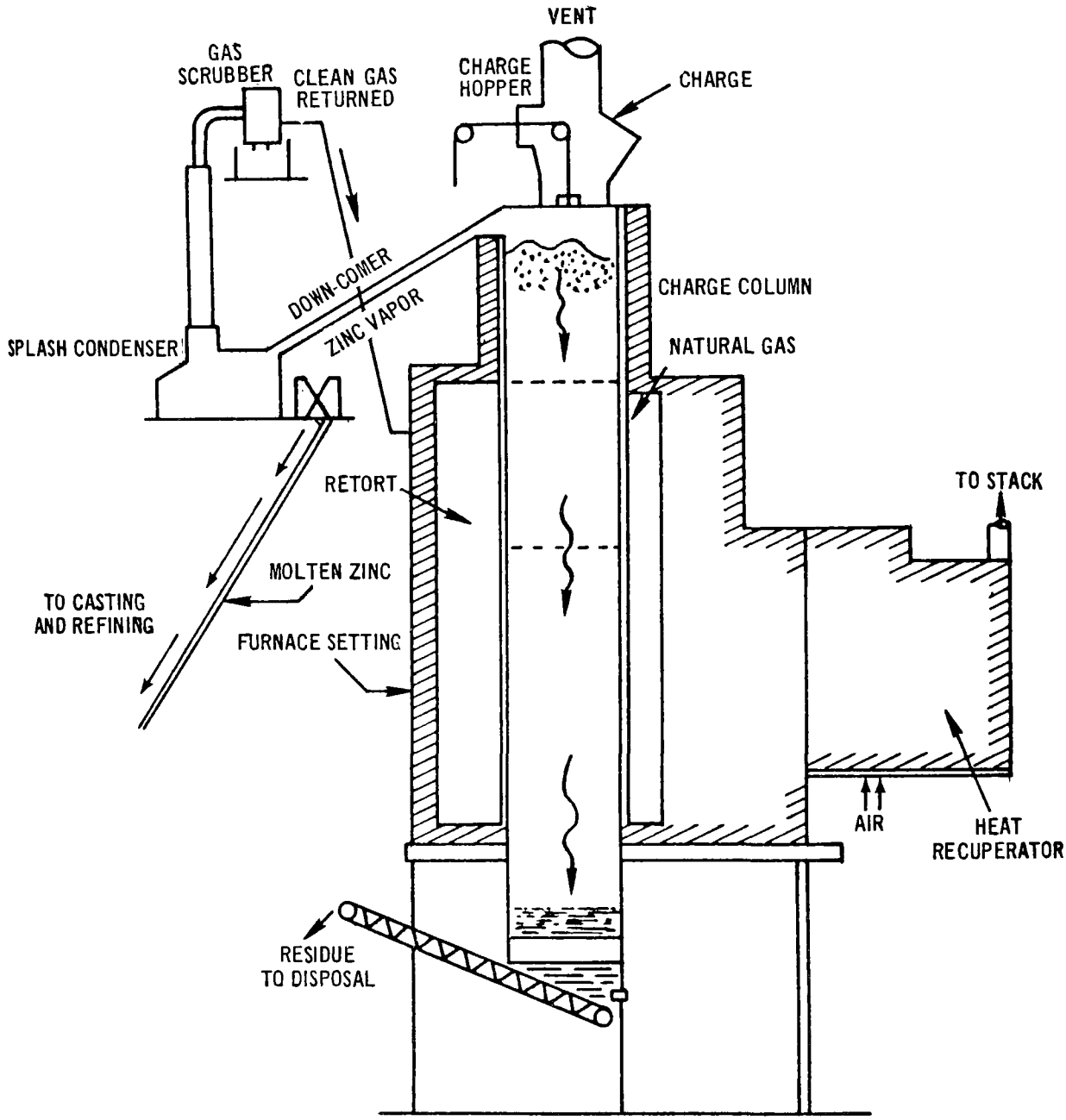

Figure 4-15. Vertical retort.[7]

Table 4-13. CHARACTERISTICS OF UNCONTROLLED EXHAUST GAS FROM HORIZONTAL ZINC RETORTS

Parameters	Standard international units	English units	References
Gas flow rate	3.6-5.7 $m^3/s \cdot Mq \cdot h^{-1}$ product	7000-11,000 scfm/tph product	8
Grain loading	0.10-0.32 g/m^3	0.04-0.13 gr/scf	8
Lead content of particulate	0-3% w	0-3% w	8
CO_2 content	12-17% v	12-17% v	8
Emission factors			
° particulate	40 g/kg	80 lb/ton	35
° lead	1.2 g/kg	2.4 lb/ton	

Emissions - Available data on uncontrolled emissions from horizontal and vertical retorts are shown in Tables 4-13 and 4-14. Total emissions for 1975 from primary zinc retorts, as shown in Table 4-15, are based upon estimated production levels and published emission factors. There were no controls at the only operating horizontal retort, and an overall collection efficiency of 92 percent was assumed for the vertical retort. Total lead emissions from retorting are estimated to be 28 Mg (31 tons).

4.3.3.2 Fugitive Emissions[24] - A process flow diagram for primary zinc production with potential fugitive particulate emission sources is shown in Figure 4-16. The various types and sources of potential fugitive emissions are numbered and encircled. Some of those fugitive emission sources for primary zinc retorting are shown in Table 4-16 with the relative magnitude of the uncontrolled particulate emissions. Lead content will be about the same as ore concentrate for ore handling and storage emissions.

Major sources of fugitive emissions are zinc ore handling and transfer, zinc casting, retort building and sinter machine discharge and screens, but data concerning the fugitive emissions from primary zinc production are unavailable. Data characterizing the flue gases are available and may closely parallel the characteristics of fugitive emissions. Flue gas particulate emissions from sinter machines are less than 10 μm in size and generally contain between 30-35 percent

Table 4-14. CHARACTERISTICS OF UNCONTROLLED EXHAUST GAS FROM A VERTICAL ZINC RETORT

Parameters	Standard international units	English units	References
Gas flow rate	6.4 $m^3/s \cdot Mg \cdot h^{-1}$ product	12,300 acfm/tph product	8
Temperature	590°C	1100°F	
Grain loading	2.1 g/m^3	0.9 gr/scf	8
Particle size distribution	100% < 10 μm	100% < 10 μm	8
Lead content of particulate	4-5% w	4-5% w	8
CO_2 content	2.5-3.0% v	2.5-3.0% v	8
Emission factors			
° particulate	50 g/kg product	100 lb/ton product	35
° lead	2-2.5 g/kg product	4-5 lb/ton product	

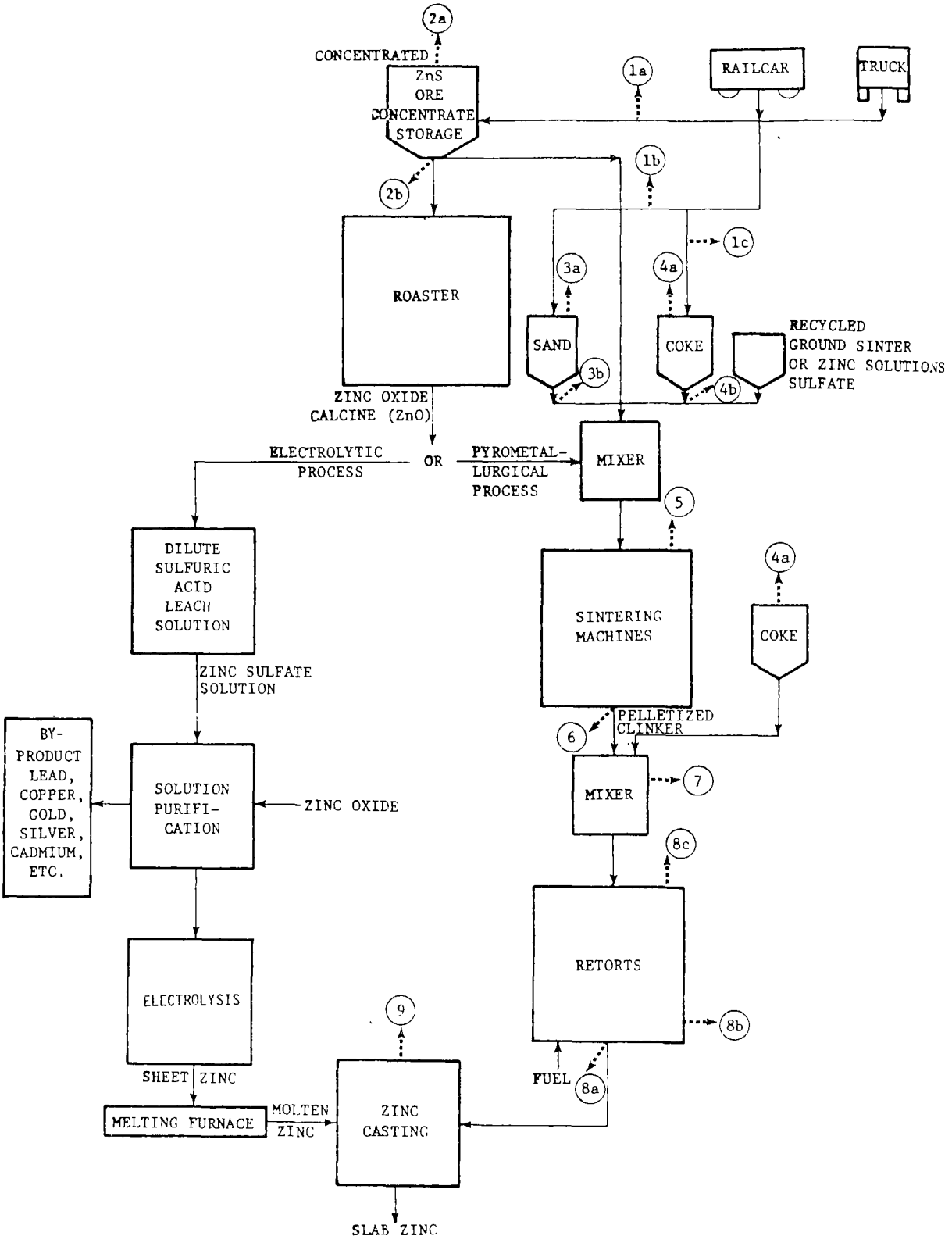

Figure 4-16. Process flow diagram for primary zinc production showing potential industrial process fugitive emission points.

Table 4-15. LEAD EMISSIONS FROM ZINC RETORTS

Plant	Estimated 1975 zinc production, Gg	(1000 tons)	Particulate emissions,[33] Mg	(tons)	Average percent lead content of emissions[8]	Uncontrolled lead emissions, Mg	(tons)	Lead emissions after controls, Mg	(tons)
Horizontal retort	28	(31)	1130	(1250)	1.5%	17	(19)	17	(19)
Vertical * retort	64	(71)	3220	(3550)	4.5%	145	(160)	11	(12)

* Does not include electrothermic retorts

Table 4-16. FUGITIVE LEAD EMISSION SOURCES AND ESTIMATED UNCONTROLLED PARTICULATE EMISSION FACTORS[24]

1.	Zinc ore unloading	0.015-0.2 g/kg unloaded	0.03-0.4 lb/ton
2.	Zinc ore storage	0.17 g/kg stored	0.33 lb/ton
3.	Zinc ore handling & transfer	0.82-2.5 g/kg handled	1.64-5.0 lb/ton
4.	Sinter machine windbox	0.12-1.22 g/kg sinter	0.25-1.1 lb/ton
5.	Sinter machine discharge & screens	0.28-1.22 g/kg sinter	0.55-2.45 lb/ton
6.	Retort furnace residue discharge & cooling	0.25-1.02 g/kg Zn	0.50-2.0 lb/ton
7.	Retort furnace upset	2.5-5 g/kg zinc	5-10 lb/ton

by weight lead. Flue gas particulates from retort buildings range from the micron to submicron size and normally have 0-3 percent lead by weight.

Control of the fugitive emissions from primary zinc production include proper operating procedures for the sinter machine windbox, and the proper operational procedures or use of movable hoods for the zinc retort furnace. The hoods evacuate the buildings to a fabric filter to capture the fugitive emissions.

4.3.3.3 Control Techniques

A. Gas Removal: Combustion gases in a sintering machine are drawn down through the machine by windboxes operating at a suction of 3.5 to 4.5 kPa (14 to 18 in. H_2O).[31] Draft fans draw the gases into the dust collection system. At the horizontal retort furnace, gas escapes through a small hole in the stuffing at the mouth of the condensers. No effective particulate control system has been developed for horizontal retorts. Because each of the thousands of retorts is an emission source, a massive control system would be required.[7] Gas from the vertical retorts is drawn through the liquid zinc condensers by venturi scrubbers. Off-gas exits through a vent at the top of the furnace.[33]

B. Gas Cooling: The sinter gas is cooled to 50 to 60°C (120 to 140°F) by water atomized at a pressure of 3 MPa (30 atm.) in a large conditioning chamber.[31] In addition, this

process lowers the electrical resistance of the gas. Air dilution is also used to cool the gas from sinter machines, as well as from vertical retorts.

C. Precleaning: Settling flues are used to remove large particulate from sinter machines at one smelter.[31] It is not known whether any other precleaning treatment is used at sinter machines or vertical retorts, although cyclones are probably used at the latter.

D. Electrostatic Precipitators: ESP's are used to control particulate emissions, including lead, from sinter machines at primary zinc plants. Horizontal-flow, plate-type ESP's are most common. Particulate is removed from the plates by vibrators or rappers. At one plant, each of three precipitators is rated at 47.2 m^3/s (100,000 scfm).[31] Mild-steel construction is common. Typical spark rates range from 50 to 250 sparks/minute. The corona power generally ranges from 0.12 to 0.18 $w/m^3 \cdot s^{-1}$ (0.2 to 0.3 w/cfm).[33] Precipitators may incorporate up to four sections to reduce downtime. Temperature and moisture content of the gas must be carefully controlled to ensure efficient operation. The inlet gas temperature should be between 120° and 260°C (250 and 500°F).[33] Operation at a lower temperature will cause condensation in the precipitator, and at a higher temperature may warp the plates. Other causes of poor performance of ESP's include nonuniform gas distribution, abnormal

electrical conditions, improper rapping, and gas leakage causing reentrainment of the particulates.[39]

E. Fabric Filters: Fabric filters are used to clean the gases from vertical retort furnaces. At one sinter machine a fabric filter is used in parallel with three ESP's.[31] Reverse-air jet cleaning is used most commonly. The pressure drop for fabric filters used in nonferrous metals production ranges from 0.5 to 2.0 kPa (2-8 in. H_2O).[33] Too low a pressure drop prevents proper inflation of the bag, resulting in improper cleaning action, whereas too high a drop increases the friction and wear between the blow ring and bag. The average air flow, or air-cloth ratio, ranges from 1.0 to 1.8 $cm^3 \cdot s^{-1}/cm^2$ of cloth (2.0-3.5 cfm/ft^2). The ratio increases to 4.6 $cm^3 \cdot s^{-1}/cm^2$ (9.0 cfm/ft^2) during cleaning with a reverse-air jet stream.[33] The most critical operating variables are moisture content and temperature of the gas. The temperature must be 10° to 24°C (50° to 75°F) above the dew point to prevent condensation. Too much moisture causes formation of mud cakes on the bags, creating high resistance and ultimate rupture. Dacron ^{R} or woven glass are popular fabrics in this type of filter. Normal operating temperature for Dacron bags is 130°C (270°F).[33] The maximum filtering velocity for these fabrics is 4.1 cm/s (8 fpm).[28]

4.3.3.4 Control Costs - A primary zinc smelter with a production capacity of 327 Mg/day (360 TPD) zinc product is chosen for the model plant cost analysis. Two separate control systems are evaluated - one for sintering operations and one for vertical retorting.

A. Sintering - A sintering operation of adequate size to feed the 327 Mg/day (360 TPD) zinc plant exhausts 85 m^3/s of gas at 650°C (179,000 acfm at 1200°F) and emits particulate matter at the rate of 614 kg/h (1350 lb/hr), of which 30 to 55 percent is lead. The gases enter a balloon flue to settle out large particles. The gases enter a spray chamber at 540°C (1000°F) to reduce the temperature to 315°C (600°F) and increase humidity, prior to entering an electrostatic precipitator. The ESP is designed to maintain an efficiency of about 95 percent by providing a total plate area of 2470 m^2 (26,600 ft^2). The inlet flow rate is 63 m^3/s (133,000 acfm). A 300-hp fan system is rated at 63 m^3/s (133,000 acfm) at a total system pressure drop of 2.1 kPa (8.5 in. W.G.). This control system is adequate to meet the average state emission limitation of 9.1 kg/h (20 lb/hr).

The capital costs for the above system are estimated at $2.97 million, including balloon flue, spray chamber, ESP, fan system, hold tank, pump, and ductwork.[a]

The annualized costs are estimated at $855,000, including utilities, labor, maintenance, overhead, and fixed

[a] See Section 2.9 and Appendix B for discussion of cost analyses Detailed cost studies are available from EPA upon request.

costs (with capital recovery). Collected solids are recycled through the process. Annual operating time of 8000 hours and 4000 annual labor hours are assumed.

The capital and annualized costs are expressed below in terms of exhaust flow rate and annual labor hours:

S.I. units

$$\text{Capital, \$} = 2.07 \times 10^5 V^{0.6}$$

$$\text{Annualized, \$} = 1230V + 46{,}900V^{0.6} + 19.6H$$

$V = m^3/s$ at 650°C
H = annual labor hours

$28 < V < 260$
range

English units

$$\text{Capital, \$} = 2094Q^{0.6}$$

$$\text{Annualized, \$} = 0.58Q + 474Q^{0.6} + 19.6H$$

Q = acfm at 1200°F
H = annual labor hours

$60{,}000 < Q < 540{,}000$
range

B. Vertical Retorting - A vertical retorting operation for a 327 Mg/day (360 TPD) zinc smelter exhausts 87 m^3/s at 590°C[8] (185,000 acfm at 1100°F) and emits 680 kg/h (1500 lb/hr) of uncontrolled particulate,[35] of which 4 to 5 percent is lead. The gases enter a balloon flue where large particles

are settled out. The gases are cooled from 480°C (900°F) to about 150°C (300°F) by a spray chamber designed to handle 75 m^3/s (161,000 acfm). The gases enter a reverse-air fabric filter designed to clean 42 m^3/s (90,000 acfm) at a filter velocity of 1.3 cm/s (2.5 fpm).[33] A 250-hp fan system provides adequate service for a system pressure drop of 1.3 kPa (5 in. W.G.). This system is capable of meeting state emission regulations of 11 kg/h (25 lb/hr).

Capital costs for the above control system are estimated at $1.94 million, including balloon flue, spray chambers, fabric filter, fan system, hold tank, pump, and ductwork.[a]

Annualized costs are estimated at $661,000, including utilities, maintenance, labor, overhead, and fixed costs (with capital recovery). Collected solids are recycled through the process; no credit for the recycled dust is applied against annual costs. Annual operating time is estimated at 8000 hours and annual labor requirements are 4000 hours.

The capital and annualized costs are expressed below in terms of exhaust volume and annual labor hours:

S.I. units

Capital, $ = $1.33 \times 10^5 V^{0.6}$

Annualized, $ = $890V + 34{,}600V^{0.6} + 19.6H$

[a] See Section 2.9 and Appendix B for discussion of cost analyses. Detailed cost studies are available from EPA upon request.

V = m^3/s at 590°C
H = annual labor hours

$30 < V < 260$
range

English units

Capital, $ = $1340\ Q^{0.6}$

Annualized, $ = $0.42Q + 350Q^{0.6} + 19.6H$

Q = acfm at 1100°F
H = annual labor hours

$60{,}000 < Q < 560{,}000$
range

4.3.3.5 Impacts

A. Emission Reduction Benefits

Particulate emissions from the sintering and vertical retort processes can be reduced by a total of 95 kg/Mg (190 lb/ton) of zinc product. Lead content of the sintering dust is 30 to 55 percent while that of the vertical retort is 4 to 5 percent.

B. Energy Impact

The energy required to operate the entire primary zinc industry averaged 55.2 GJ/Mg (55.2 MM Btu/ton) of zinc product.[29] Additional energy required to operate the sintering ESP and the vertical retort fabric filter for the model processes (Section 4.3.3.4) is estimated at 0.15 GJ/Mg (0.15 MM Btu/ton) corresponding to an increase of only 0.3 percent. Therefore, no significant energy impact can be expected for air pollution control in the zinc industry.

C. Water Pollution Impact

Wet collectors are not used on the sintering or the retorting operations. No wastewater is generated by the fabric filters and ESP's, and therefore, no water pollution impact is expected.

D. Solid Waste Impact

No solid wastes are generated since they are recycled through the plant. Therefore, no solid waste impact by air pollution control equipment anticipated.

4.3.4 Primary Copper Production

In 1975 approximately 5 Tg (5.5×10^6 tons) of copper concentrate was treated to produce about 1.25 Tg of copper metal (1.38×10^6 tons).[40] In the same year, the primary copper industry emitted about 1314 Mg of lead (1444 tons) to the atmosphere at 15 locations. These totals do not include fugitive emissions.

4.3.4.1 Processes and Emissions - The primary copper industry is engaged in concentrating the copper ore of various minerals and processing it to copper by pyrometallurgical or hydrometallurgical methods. At present, most of the domestic copper is produced by pyrometallurgy and a small portion by hydrometallurgy. Hydrometallurgy is a wet process causing negligible air pollution. The pyrometallurgical processes are the main source of air pollution. As shown in Figure 4-17, primary copper production involves mining, concentrating, and smelting processes.

Depending upon the physical properties of the ore, the concentrating process generally involves crushing, grinding, classification, flotation, and dewatering. All of these operations are carried out at ambient conditions. Lead emissions from ore crushing and grinding are discussed in Section 4.3.1. There are minor lead emissions from flotation and dewatering.

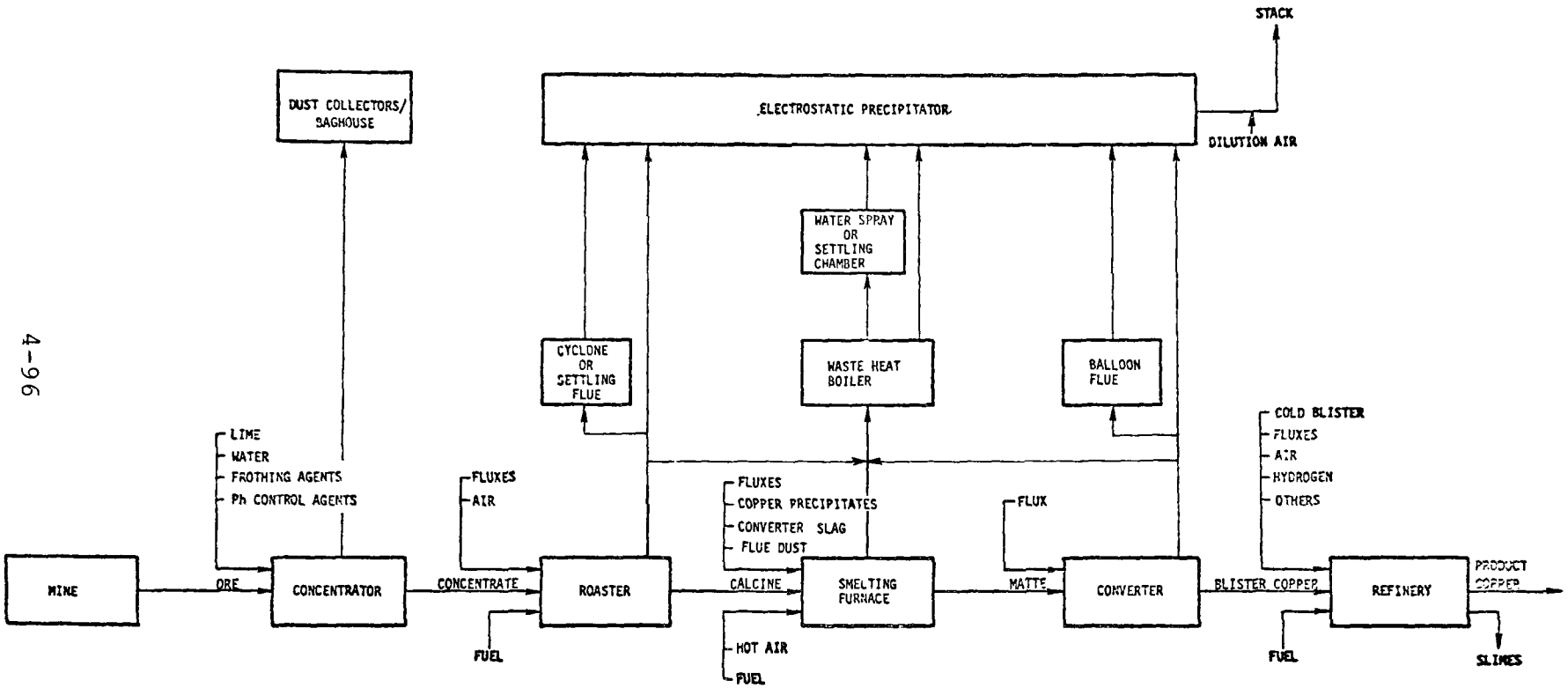

Figure 4-17. Primary copper smelter flow diagram.

Roasting, calcining, and converting processes are the main sources of air pollution in the industry. Currently electrostatic precipitators are used on most of the roasters, reverberatory furnaces, and converters of the primary domestic copper industry. Materials handling is also a source of particulate emissions.

A. Roasting:

Process - The ore concentrate is charged directly to the roaster to produce a charge containing controlled amounts of sulfur as needed for economical smelting and conversion. Roasting dries the concentrate and volatilizes some impurities. About 1 Mg (1.1 tons) of the concentrate is treated with addition of 150 kg fluxes (330 lb) and 740 kg of air (1630 lb) to produce 900 kg of calcined product (1980 lb).[7]

In the roasting of copper sulfide ores the concentrates are heated in air (or oxygen-enriched air) to the temperature required for removing some of the sulfur as sulfur oxides. Two types of roasters are currently being used: multiple-hearth and fluid-bed, as illustrated in Figures 4-18 and 4-19. Seven of the fifteen U. S. copper smelters operate roasters: four are multiple-hearth and three are fluid-bed. The remaining facilities feed concentrate directly to the reverberatory furnace without roasting.

Since the basic design of a multiple-hearth roaster results in a relatively long contact time for roasting concentrate, these units generally operate at relatively

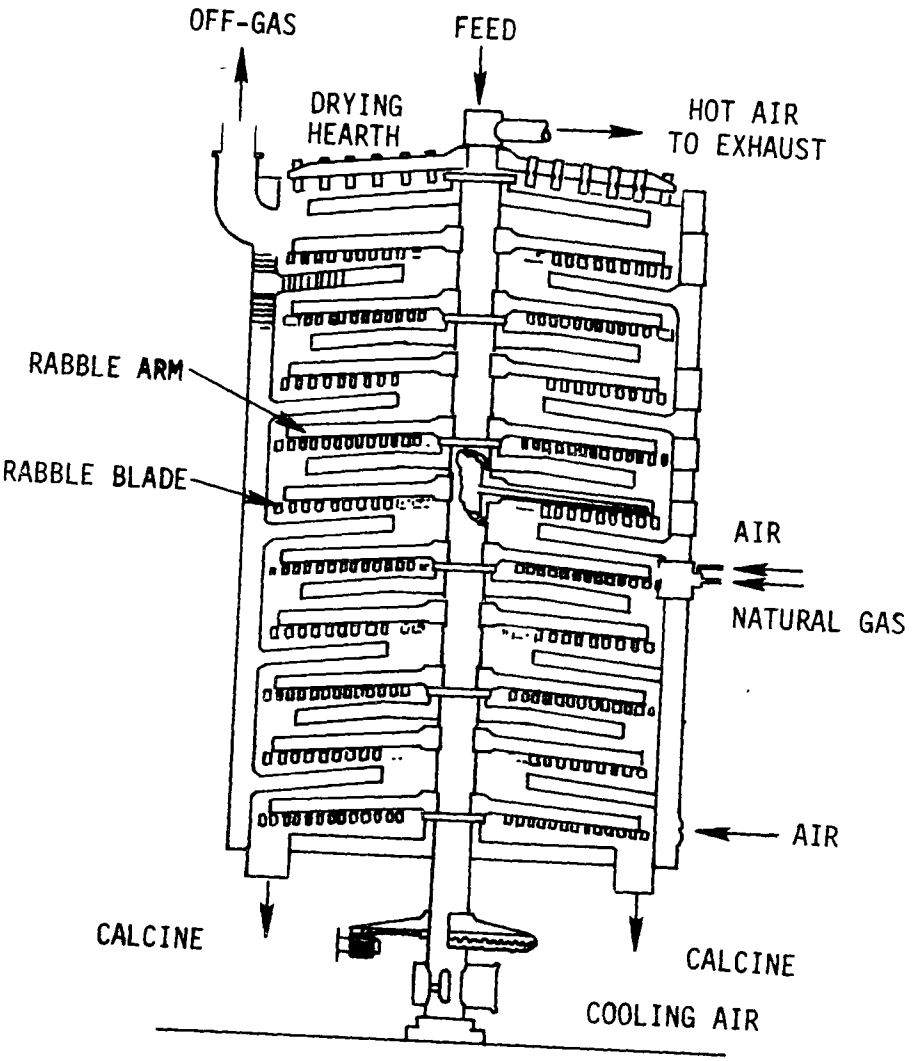

Figure 4-18. Multiple-hearth roaster.[7]

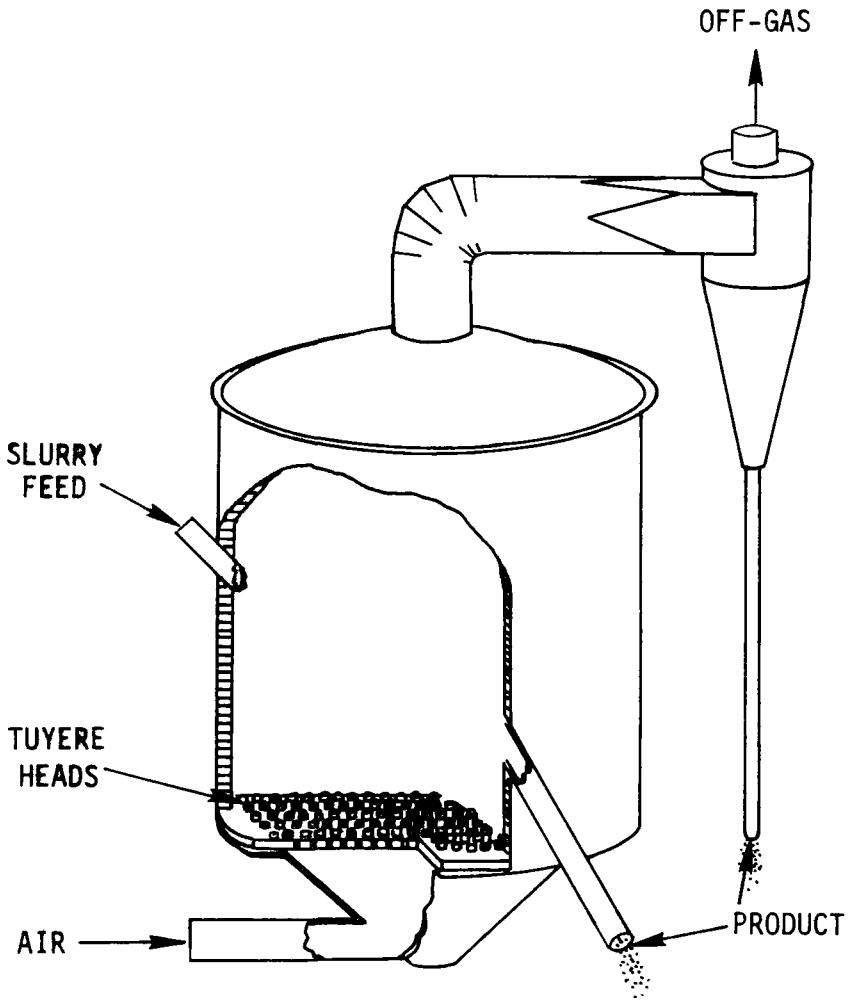

Figure 4-19. Fluid-bed roaster.[7]

lower throughput rates. The turbulent bed in a fluid-bed roaster provides for extremely intimate contact between the concentrates and oxidizing environment. On the basis of average copper-roasting applications in the United States, one multiple-hearth roaster is used to roast approximately 170 Mg per day (190 tpd) of copper concentrate, and one fluid-bed roaster is used to roast about 1.04 Gg per day (1150 tpd).[7] Operation of fluid-bed roasters generally is autogenous in that no fuel is required other than that needed for preheating of the roaster for start-up. Operation of multiple-hearth roasters may or may not be autogenous. Roaster temperatures range from 200°C (390°F) at the top of the hearth to 760°C (1400°F) on the lower levels.[41]

Emissions - Dusts, oxides of sulfur, and water vapor are released during roasting. The off-gases from multiple-hearth roasters contain SO_2 in the range of 0.5 to 2 percent. The off-gases from fluid-bed roasters, however, contain SO_2 in the range of 12 to 14 percent.

The roasting process generates particulate emissions on the order of 22.5 g/kg of ore concentrate charged (45 lb/ton)[34] as shown in Table 4-17. According to one report, the lead content of the combined flue dust ranges from 0.5 to 12 percent.[44] It is assumed that 0.5 percent corresponds to a concentrate of 1000 ppm lead and the 12 percent corresponds to a concentrate of 24,000 ppm lead. Therefore, the lead emission factor for the roasting process is determined to be 1.2 (P) g/kg (2.3 (P) lb/ton) of concentrate charged, where

Table 4-17. CHARACTERISTICS OF UNCONTROLLED EXHAUST GAS FROM A COPPER ROASTER

Parameters	Standard international units	English units	References
Gas flow rate	0.73 (x) + 1.6[a]	1.4(y)+ 3.4[b]	42
Temperature	650°C	1200°F	42
Grain loading	14-55 g/m^3	6-24 gr/scf	34
Particle size distribution	15% < 10 µm 85% > 10 µm	15% < 10 µm 85% > 10 µm	43
Lead content of particulate	0.5-12% w	0.5-12% w	44
SO_2 content	0.5-2% v (multiple hearth) 12-14% v (fluid bed)	0.5-2% v (multiple hearth) 12-14% v (fluid bed)	42
Emission factors			
° particulate	22.5 g/kg	45 lb/ton	34
° lead	1.2 P g/kg[c]	2.3 P lb/ton[c]	

[a] x = Mg/hr production capacity; expression yields exhaust flow in m^3/s.

[b] y = TPH production capacity; expression yields exhaust flow in 10^3 scfm.

[c] P is the percent of lead in the concentrate.

P is the percentage of lead in the concentrate.

Based on the average lead content for U. S. copper concentrates of 0.3 percent[45] and an overall control efficiency of 92.6 percent, the total lead emissions from copper roasting facilities in 1975 are estimated at 107 Mg (117 tons) by the throughput of 4.0 Tg (4.4×10^6 tons) of concentrate.

B. Smelting Furnaces:

Process - The roasted product (calcine) is smelted in the reverberatory furnace to produce copper-iron sulfide matte and a silicious slag. Smelting can be done in a reverberatory furnace or an electric furnace, as shown in Figures 4-20 and 4-21. All but two domestic smelters use fossil-fuel-fired reverberatory furnaces; the other two use electric furnaces. An average of 580 Mg (640 tons) per day of copper calcine and concentrates is smelted in each of 26 operational reverberatory furnaces. At one electric furnace, approximately 225 Mg (250 tons) per day of copper calcine is processed.[7]

The roasted charge is fed to the furnace through a hopper and is combined with fuel and hot air. The charge contains copper concentrate or roasted product, recycled copper precipitates, converter slag, flue dust, and flux. When the concentrate is charged directly to the electric furnace, the feed must be dried ahead of the furnace to reduce moisture content. The liquid matte is formed at about 980°C (1800°F), and the furnace temperature may reach 1315°C (2400°F).[46] One Mg of concentrate (1.1 ton) produces about 0.67 Mg of copper matte (0.73 ton) and 0.8 Mg of slag (0.88 ton).

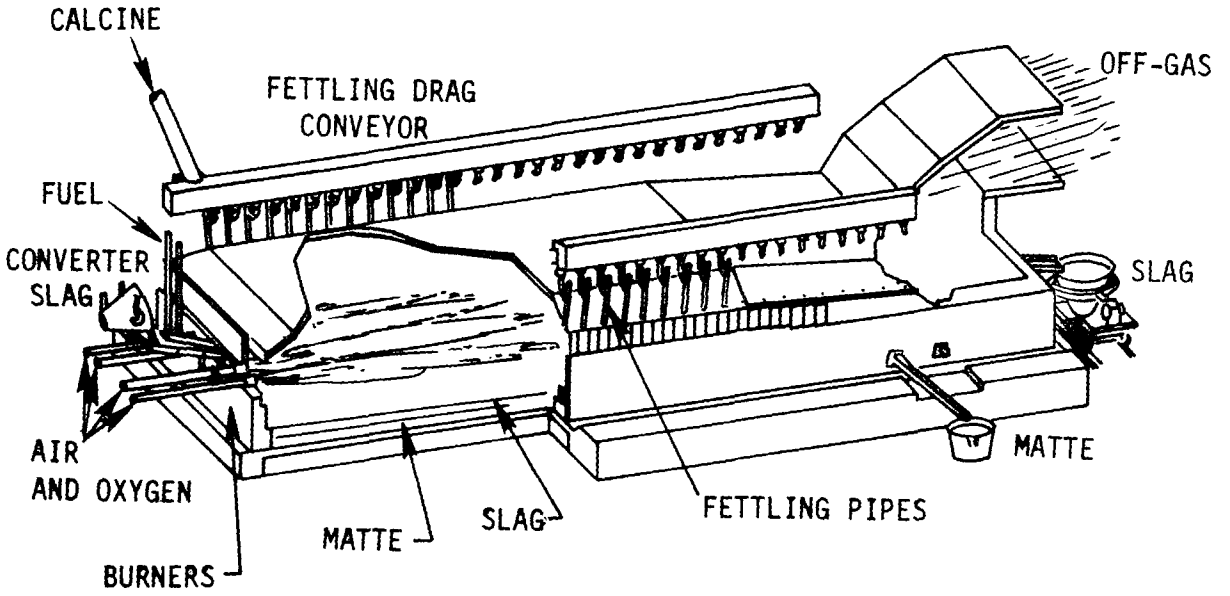

Figure 4-20. Reverberatory furnace.[7]

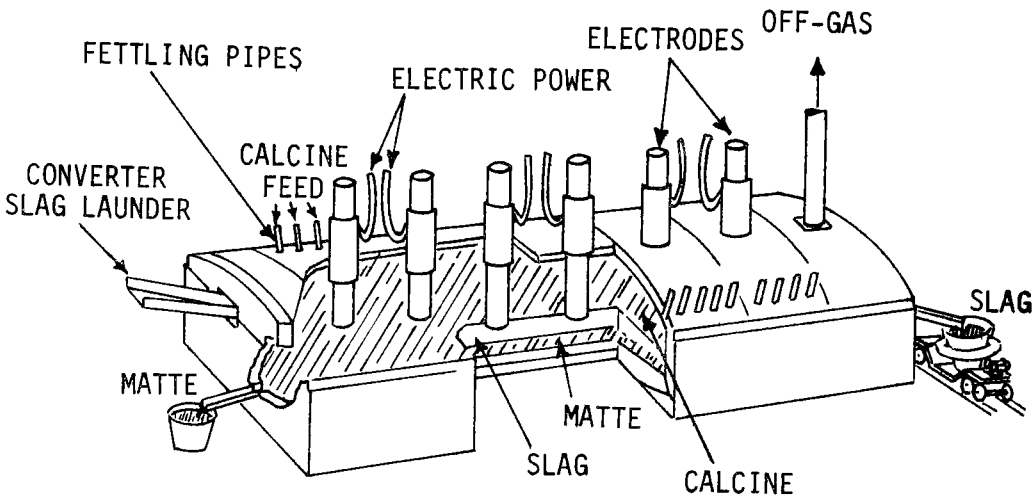

Figure 4-21. Electric smelting furnace.[7]

Emissions: About 15 kg of particulate is emitted per Mg of copper matte produced (30 lb/ton).[47] This is equivalent to 10 kg of particulate per Mg of copper concentrate charged (20 lb/ton). When the process is controlled, the flue dust from the control device is recirculated to the charge. Lead content of the particulate depends on the input material (wet concentrate or calcine) and volatility of lead at the process temperature, which varies from plant to plant. At one plant, where concentrates are directly fed to the furnace, the reverberatory furnace particulate emissions contained an average of 8.3 percent lead.[48] At this average lead content of dust, the lead emission factor is 0.83 g/kg of concentrate (1.66 lb/ton). This data is from a green feed smelter; however, calcine fed furnaces may have less lead. Table 4-18 presents the emission characteristics of the reverberatory furnace.

Lead is also present in amounts of 100 ppm in reverberatory furnace slag and 250 ppm in electric furnace slag.[49]

With typical control efficiencies of electrostatic precipitators, one study developed a controlled lead emission factor of 0.044 g/kg of concentrate (0.088 lb/ton) for a reverberatory furnace.[34,50] The total lead emitted to the atmosphere by smelting in 1975 was 220 Mg (242 tons).

Fugitive dust emissions from the smelting processes may contribute significantly to the total lead emissions. Quantitative information on fugitive emissions from the smelting process is not available.

Table 4-18. CHARACTERISTICS OF UNCONTROLLED EXHAUST GAS FROM A COPPER REVERBERATORY FURNACE

Parameters	Standard international units	English units	References
Gas flow rate	0.73 x + 1.6[a]	1.4y + 3.4[b]	42
Temperature[c]	370°C	700°F	43
Moisture content	18% v	18% v	51
Grain loading	5-12 g/m^3	2-5 gr/scf	42
Particle size distribution			
Lead content of particulate (green feed)	8.3% w	8.3% w	42
SO_2 content	0.5-2.5% v	0.5-2.5% v	51
Emission factors			
° particulate	10 g/kg Cu concentrate	20 lb/ton Cu concentrate	47
° lead (green feed)	0.8 g/kg Cu concentrate	1.7 lb/ton Cu concentrate	

[a] x = Mg/h product. Expression yields flow in m^3/s.

[b] y = tph product. Expression yields flow in 10^3 scfm.

[c] Temperature of the air after passing through the waste heat boiler prior to being diluted with air.

C. Converting:

Process - The copper matte is treated batchwise in a converter to produce blister copper. Figure 4-22 shows a converter. The molten matte is brought in ladles from the reverberatory or electric furnace and charged to the converter. Residues from zinc plants, dusts from other processes, scrap, and siliceous ore are also added. Air from dryers is forced into the molten bath or matte. The reaction is carried out at 1200°C (2200°F). Blister copper and slag are formed. The slag is skimmed off and the metal is transferred to holding furnaces for casting or further refining. During the reaction, the sulfur in the charge is converted SO_2 which escapes in the exit gases. The lead and other trace elements are partly oxidized and volatilized. The copper converting process is autogenous. An average converter processes approximately 270 Mg of copper matte per day (300 tpd).[7]

Emissions - The converter emits about 120 g particulate/kg of copper (240 lb/ton), which is equivalent to 30 g/kg of concentrate (60 lb/ton).[34] Lead content of particulate is variable, depending mainly on the lead content of the converter charge. At one plant, particulate from the converter contained 0.83 weight percent lead;[52] and at another plant the particulate contained 8.6 percent by weight.[48]

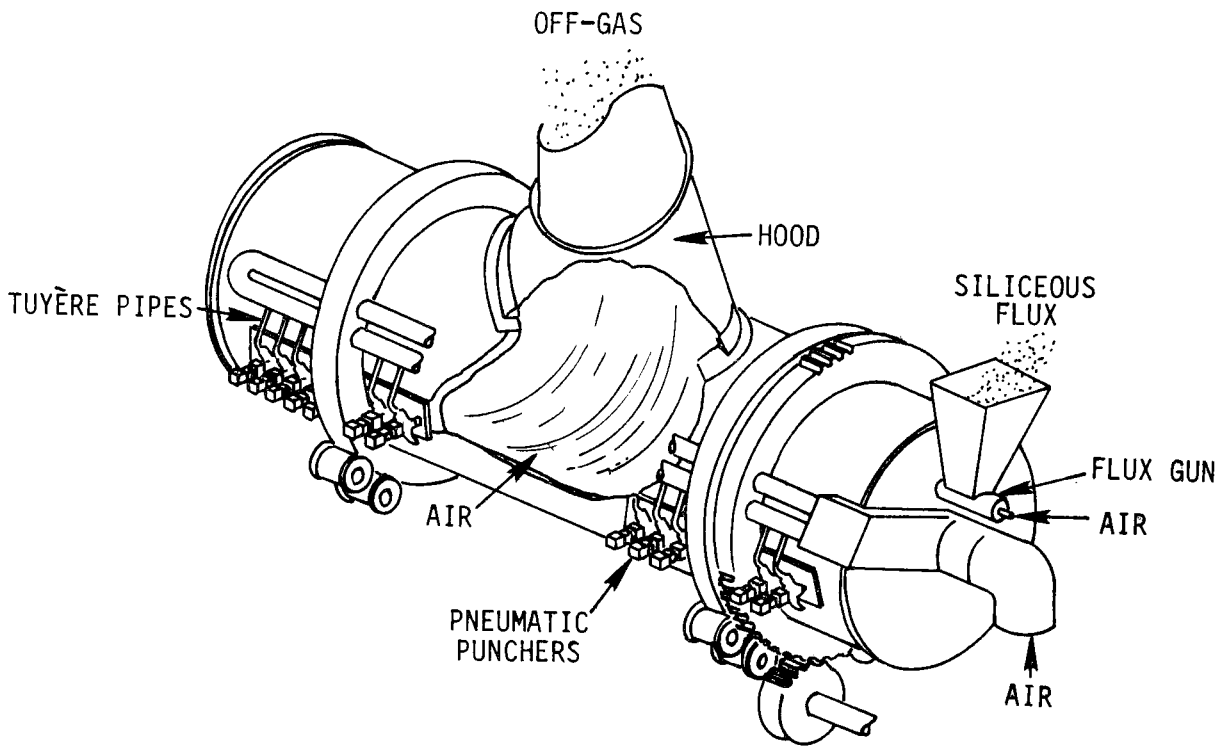

Figure 4-22. Copper converter.[7]

At 8.6 percent lead content, the uncontrolled lead emission factor is 2.6 g/kg of concentrate (5.2 lb/ton). According to one source the factors for uncontrolled and controlled lead emission are 2.5 g/kg of concentrate (5 lb/ton) and 0.3 g/kg of concentrate (0.6 lb/ton), respectively.[34,50] These emission factors are based on the particulate emission factor, the lead content of the uncontrolled particulate, and lead content of particulate exiting from the ESP. At 92 percent lead control efficiency and 2.6 g/kg concentrate (5.2 lb/ton) of uncontrolled lead emissions, the lead released to the atmosphere from this source in 1975 was 987 Mg (1085 tons). Table 4-19 presents typical characteristics of emissions from the converter.

D. Refining:

Process - Copper from the converter is processed by fire-refining and electrolytic refining. Although some domestic copper is produced as fire-refined commercial copper, about 90 percent of total production is electrolytic copper. Fire-refining produces copper anodes and is usually followed by electrolytic refining to produce the final copper product. Fire-refining is usually done in cylindrical furnaces to produce anodes or in small reverberatory furnaces to produce salable copper. Molten copper from the converter or occasionally cold blister copper, air, fluxes (soda ash or lime), and a reducing agent are the inputs to the process.

Table 4-19. CHARACTERISTICS OF UNCONTROLLED EXHAUST GAS FROM A COPPER CONVERTER

Parameters	Standard international units	English units	References
Gas flow rate	0.83-1.0 $m^3/s \cdot Mg \cdot h^{-1}$ product	1600-2000 scfm/tph product	42
Temperature	1200°C	2200°F	43
Moisture content	4.8-6.8%	4.8-6.8%	53
Grain loading	12 g/m^3	5.3 gr/scf	43
Particle size distribution	50% < 10 μm	50% < 10 μm	
Lead content of particulate	0.83-8.6% w	0.83-8.6% w	48, 52
SO_2 content	6-7% v	6-7% v	
Emission factors			
° particulates	120 g/kg Cu produced	240 lb/ton Cu produced	33
° lead	1.0-10 g/kg Cu	2.0-21 lb/ton Cu	

In fire-refining the molten metal is oxidized by blowing air into the charge with agitation. The slag that is formed is skimmed from the products and returned to the converter. At the completion of oxidation, the reduction phase of fire refining is accomplished either by a process called poling (inserting logs into the smelt) or by introducing natural gas into the furnace. Fluxing is performed only in production of fire-refined salable products. The product from the furnace is poured at 1120°C (2050°F) into molds.

In electrolytic refining the anodes are dissolved in an electrolyte containing copper sulfate and sulfuric acid. Impurities are removed as slimes. The copper cathodes are subsequently melted and cast into commercial shapes.

The fire refining process emits about 5 g of particulate/kg of concentrate charged (10 lb/ton).[34] No data are available on the composition of particulate. The slimes from the refining contain 2 to 15 percent lead.[54]

Table 4-20. UNCONTROLLED PARTICULATE FUGITIVE EMISSIONS CONTAINING LEAD FROM COPPER SMELTING OPERATIONS[24]

Process	Uncontrolled particulate emissions	
1. Unloading & handling of concentrate	5 g/kg handled	10 lb/ton
2. Ore concentrate storage	0.17 g/kg stored	0.33 lb/ton
3. Roaster operations	11 g/kg Cu	23 lb/ton
4. Reverb operations	4.2 g/kg Cu	8.5 lb/ton
5. Converter operation	1.6-8.9 g/kg Cu	3.3-18 lb/ton

4.3.4.2 Fugitive Emissions[24] - Figure 4-23 shows a process flow diagram for primary copper production with the potential fugitive particulate emission in dotted lines. The various types and sources of potential fugitive emissions are numbered and encircled. Several of the sources of fugitive emissions are shown in Table 4-20, with the relative magnitude of the uncontrolled emission rates. Major sources of fugitive emissions are ore concentrate unloading, roaster operations, and converter operations.

Lead contents will be approximately equivalent to the ore concentration for ore handling and storage, and the same as furnace stack emission for furnace fugitive emissions. The chemical characteristics of fugitive particulate emissions from the various primary copper operations are shown in Table 4-21. Fifteen percent of the particulates in the

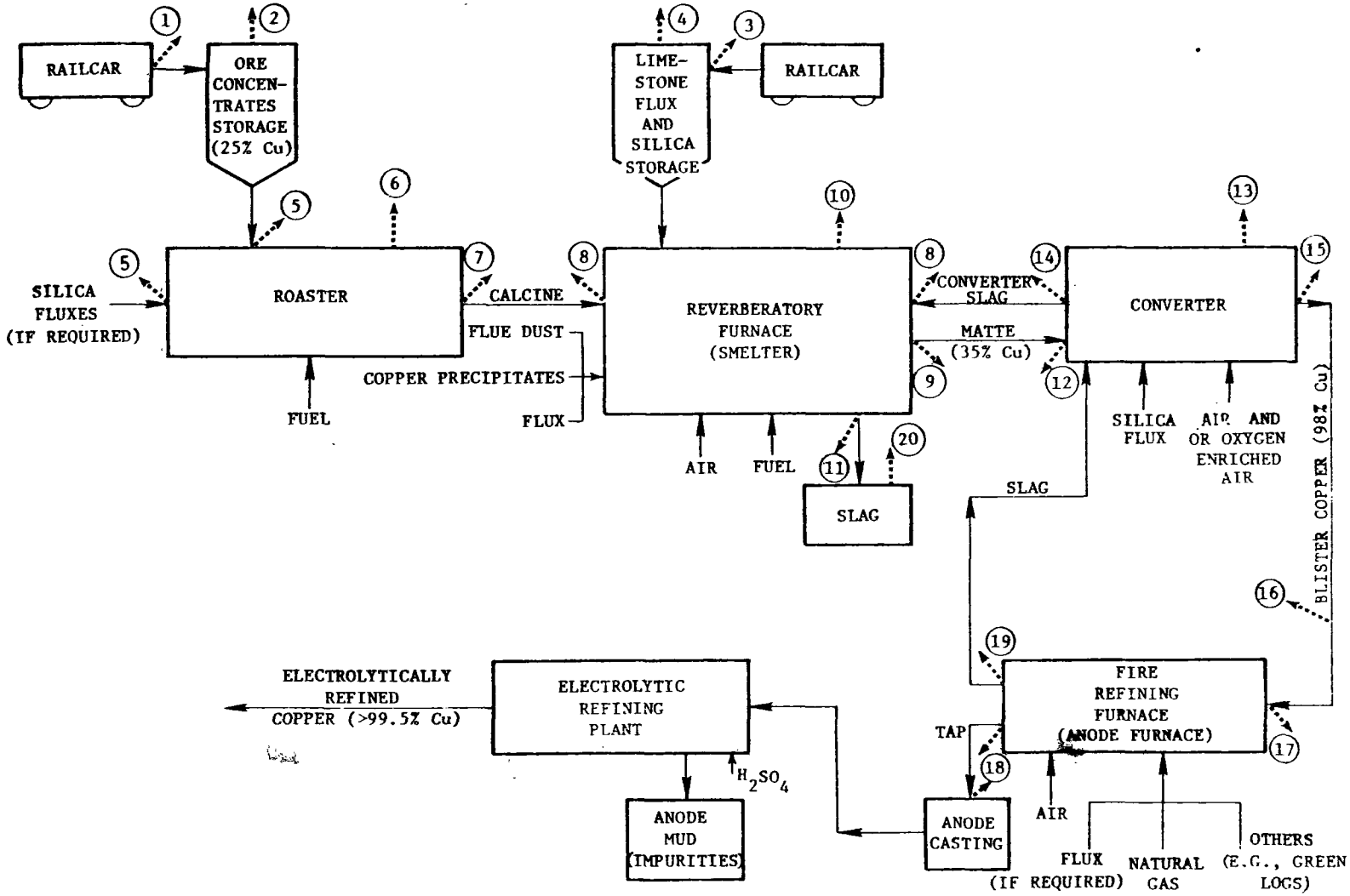

Figure 4-23. Process flow diagram for primary copper smelting showing potential industrial process fugitive emission points.

Table 4-21. CHEMICAL CHARACTERISTICS OF FUGITIVE PARTICULATE EMISSIONS FROM VARIOUS PROCESS STEPS IN PRIMARY COPPER SMELTING[55]

Process Step	Composition (Percent)								
	Cu	Fe	S	SiO_2	CaO	Zn	Cd	Pb	Other
Ore Concentrate Storage and Handling	28	24	32	11				0.3	5
Limestone Storage and Handling					~60				40
Slag Handling	0.5	40	1.5	38					20
Roaster Loading and Operation	5					16		0.3-18	0.5
Reverberatory Furnace Loading and Operation	5					16		0.4-18	0.5
Matte Transfer	42	32	25	1				0.25	
Converter Loading and Blowing	1					8	4	2-6	

exhaust gas are less than 10 μm, and 85 percent are greater than 10μm in diameter. Lead content of the particulate is less than 18 percent by weight. Hood systems with baghouses can be used to control reverberatory slag, metal tapping operations and converter loading. The slag pile emissions are currently uncontrolled, but partial hoods and fume vents through fabric filters or scrubbers could be used.

4.3.4.3 Control Techniques - At ore concentrating units, the exhaust ventilation system is equipped with dust collectors to control effluents from the ore crushers. Roaster off-gases are commonly controlled with fabric filters or combined with reverberatory furnace exhaust and passed through an ESP. Converting operations are primary controlled by ESP's. Particulate control devices on slime recovery furnaces are generally limited to small ESP's or scrubbers.[55]

A. Roasting Facilities: The same emission control equipment is used with fluid-bed and multiple-hearth roasters. Of the seven roaster facilities now operating, three facilities combine the roaster gases with reverberatory gases prior to treatment.[7] At the remaining facilities, the particulates are recovered with combinations of several control devices. After preliminary solids collection, the gas from either type roaster is cooled to about 315°C (600°F) by water sprays or heat exchangers before final cleaning. At one facility, the

roaster gases are passed through a settling (balloon) flue, where the gas velocity is reduced sufficiently to allow the heavier particles to drop out. Dust collected in the flue is recycled to the reverberatory furnace. Collection efficiency of a balloon flue system can range from 30 to 60 percent. At one facility, the roaster gas is treated by an ESP before joining reverberatory furnace gases. At two other facilities the exhaust is passed through cyclones and ESP's before joining the converter gases. Efficiencies of the cyclone collectors are 80 to 85 percent. With careful conditioning of the flue gases, efficiencies of the ESP's can exceed 99 percent.

A fabric filter for collection of fine particulate can achieve efficiencies of 99 percent or more. These filters have not been used on roaster effluents because of the corrosive nature of exit gases and the temperature limitation of 285°C (545°F).[45] However, since early 1976, Anaconda Copper has been successfully operating a baghouse on off-gases from a fluid bed roaster, electric furnace, and reverberatory furnaces. Recently, the reverberatory furnaces have been shut down.

B. Reverberatory Furnace: Most smelter operators practice gas cooling of reverberatory and converter gases. The gases are cooled by noncontact heat exchangers in waste heat boilers, conductive cooling ducts, or cooling chambers.

The reverberatory furnace gases are treated in ESP's in combination with other control equipment such as balloon flues and cyclones for particulate control. At some plants, the roaster gases are added to the reverberatory furnace gases before treatment. Both hot and cold ESP's are in use at the copper smelters. Usually the gas temperature is reduced to about 370°C (700°F) for treatment in hot ESP's or the gas temperature is further reduced to 115 to 260°C (240 to 500°F), usually by dilution and water sprays, for treatment in cold ESP's.

Table 4-22 indicates the ESP performance of two gas streams from separate roaster/reverberatory furnaces which enter ESP's.

Table 4-22. ESP PERFORMANCE ON COPPER REVERBERATORY FURNACE AND ROASTER COMBINED EXHAUST GAS STREAMS [53]

Parameter	ESP 1 outlet	ESP 2 outlet
Flow rate, m^3/s	288	294
10^3 acfm	610	623
Temperature, °C	80	83
°F	176	181
Grain loading, g/m^3	0.04	0.057
gr/scf	0.094	0.13
Mass rate, kg/h	176	241
lb/hr	387	531

C. Converter: Converter gases are treated with equipment similar to that used for reverberatory furnace gases, i.e., a settling flue in combination with hot or cold ESP's. Particulate removal efficiencies of the ESP's at copper smelters range from 91 percent to 98.5 percent.[7] Control efficiencies of the ESP's for collection of lead and other elements range between 90 and 98 percent, comparable to the overall mass collection efficiency. At one plant, the gases enter the ESP at 125°C (256°F). Surface area of the ESP is approximately 0.067 $m^2/m^3 \cdot s^{-1}$ (1.230 ft^2/scfm) of flue gas.[52] Most converter gas streams enter sulfuric acid plants, a practice that practically eliminates particulate discharges.

Table 4-23 indicates ESP performance on two separate copper converter operations.

Table 4-23. ESP PERFORMANCE ON TWO COPPER CONVERTER OPERATIONS[53]

Parameter	Converter A		Converter B	
	Inlet	Outlet	Inlet	Outlet
Flow rate, m^3/S	62	96	86	95
10^3 acfm	132	204	183	201
Temperature, °C	124	101	121	136
°F	256	214	250	277
Grain loading, g/m^3	0.63	0.11	0.78	0.065
gr/dscf	1.44	0.26	1.8	0.15
Mass rate, kg/h	527	158	900	81.8
lb/hr	1160	347	1980	180

4.3.4.4 Control Costs - A medium-sized copper smelter with a capacity of 174 Mg/day (192 TPD) is considered the typical model plant to determine control costs. Two separate control systems are evaluated.

A. Roaster/Reverberatory Furnace - The roaster and reverberatory furnace exhausts are controlled by a common ESP system. The roaster exhaust volume is 55 m^3/s at 425°C (116,000 acfm at 800°F) after 50 percent air dilution. Reverberatory gases are cooled from 1200°C (2200°F) to 370°C (700°F) by a waste heat boiler. After 50 percent air dilution, reverberatory furnace gases amount to 55 m^3/s at 240°C (116,000 acfm at 470°F), which combine with the roaster stream. The combined stream, containing 270 kg/hr (600 lb/hr) particulate, enters a cyclone system which is designed to handle 102 m^3/s at 330°C (217,000 acfm at 630°F) and assumed to operate at 1.4 kPa (6 in. W.G.) pressure drop and 80 percent efficiency. The precleaned stream enters an insulated electrostatic precipitator at 315°C (600°F) with 7720 m^2 (83,100 ft^2) of plate area, yielding 99.6 percent efficiency, sufficient to meet state standards.[57] A 665-hp fan system handles 100 m^3/s (211,000 acfm) at a total system pressure drop of 3 kPa (12 in. W.G.).

Capital costs are estimated at $5.0 million for the roaster/reverb control system.[a] These costs included the ESP, cyclone system, waste heat boiler, I.D. fan system, and ductwork.

---

[a]See Section 2.9 and Appendix B for discussion of cost analyses. Detailed cost studies are available from EPA upon request.

Annualized costs are estimated at $1.54 million, including utilities, labor, maintenance, overhead, and fixed costs (with capital recovery). Annual operating time of 8000 hours and annual labor time of 8000 hours are assumed. Collected dust is recycled through the process.

Capital and annualized costs are expressed below in terms of combined exhaust volume and annual labor hours:

S.I. units

$$\text{Capital, } \$ = 3.1 \times 10^5 V^{0.6}$$

$$\text{Annualized, } \$ = 2440V + 19.6H + 70{,}600V^{0.6}$$

$V = m^3/s$ at 330°C
H = annual labor hours

$30 < V < 300$
range

English units

$$\text{Capital, } \$ = 3140Q^{0.6}$$

$$\text{Annualized, } \$ = 1.15Q + 19.6H + 713Q^{0.6}$$

Q = acfm at 630°F
H = annual labor hours

$70{,}000 < Q < 630{,}000$
range

B. Converter - The converter operations in the model plant have a material throughput rate of about 7.3 Mg/h (8.0 tph). The exhaust hood captures 34.6 m^3/s at 1200°C (73,300

acfm at 2200°F). Emissions are estimated at 870 kg/h (1920 lb/hr) particulate, of which up to 9 percent is lead. The temperature is reduced to 370°C (700°F) by a waste heat boiler before the gases enter a balloon flue which collects large particles. The gases enter a spray chamber to reduce the volume to 15.2 m^3/s at 315°C (32,200 acfm at 600°F) before they enter an insulated electrostatic precipitator. The ESP is a dry mechanical-rapping type with 1450 m^2 (15,600 ft^2) of plate area to maintain an efficiency of 98 percent.[57] The 75-hp fan system is designed to handle 15.2 m^3/s (32,200 acfm) at a total system pressure drop of 2.1 kPa (8.5 in. W.G.). The system is capable of meeting an average state limitation of 7.3 kg/h (16 lb/hr).

Capital costs are estimated at $2.65 million, including the ESP, waste heat boiler, spray chamber, balloon flue, fan system, and ductwork.[a]

Annualized costs are estimated at $705,000, including utilities, labor, maintenance, overhead, and fixed costs (with capital recovery). Collected dust is largely recycled through the process; however, no credit is applied against the annual costs. Annual operating time is assumed at 8000 hours and annual labor hours is assumed to be 4000.

The capital and annualized costs are expressed below in terms of exhaust volume and annual labor hours:

---

[a] See Section 2.9 and Appendix B for discussion of cost analyses. Detailed cost studies are available from EPA upon request.

S.I. units

Capital, $ = $3.2 \times 10^5 V^{0.6}$

Annualized, $ = $722\ V + 19.6H + 7.18 \times 10^4 V^{0.6}$

V = m^3/s at 1200°C
H = annual labor hours

$10 < V < 100$
range

English units

Capital, $ = $3.2 \times 10^3\ Q^{0.6}$

Annualized, $ = $0.341Q + 19.6H + 725Q^{0.6}$

Q = acfm at 2200°F
H = annual labor hours

$22{,}000 < Q < 220{,}000$
range

4.3.5 Impacts

A. Emission Reduction Benefits

Application of SIP control on the model roaster/reverberatory and converter operations (Section 4.3.5) reduce particulate emissions by 150 kg/Mg (300 lb/ton) of copper product.

On the roaster/reverberatory system the ESP reduces emissions by 37 kg/Mg (75 lb/ton) of copper product. The lead content ranges from 4 to 11 percent. The converter ESP reduces emissions by 120 kg/Mg (240 lb/ton) of copper product, containing 0.83 to 8.3 percent lead.

B. Energy Impact

The processes in a copper smelting facility require a total of about 33 GJ/Mg (36 MM Btu/ton) without air pollution control.[29] The ESP's serving the roaster/reverberatory and the converter model operations (Section 4.3.3.3) consume as estimated 0.46 GJ/Mg (0.5 MM Btu/ton) of copper produced,[29] corresponding to 1.5 percent increase in energy consumption.

C. Water Pollution Impact

Small amounts of water are used in the ESP but this does not constitute a major source of wastewater. Therefore no impact on water pollution can be expected by the use of ESP's.

D. Solid Waste Impact

Solid wastes generated by the reverberatory furnace alone is about 3 Mg/Mg copper product (3 ton/ton).[4] Solid wastes generated by other processes are not estimated because of lack of data.

The amount of dry solid waste generated by air pollution control devices designed to achieve SIP control levels will be about 150 kg/Mg (300 lb/ton) of copper product, corresponding to a 5 percent increase. Converter ESP wastes may contain 0.8 to 8.3 percent lead while roaster/reverberatory ESP dust will contain 4 to 11 percent lead.

4.3.6 References for Section 4.3

1. Communications with Mr. J. Patrick Ryan. U.S. Bureau of Mines. Lead-Zinc Branch. Washington, D.C. September 9, 1976.

2. Wixson, B.G. and Jennett, J.C. The New Lead Belt In the Forested Ozarks of Missouri. Environmental Science & Technology. Volume 9. No. 13. December 1975. pp. 1128-33.

3. Development Document for Interim Final and Proposed Effluent Limitations Guidelines and New Source Performance Standards for the Ore Mining and Dressing Industry. Point Source Category. Vol. 1. U.S. EPA. October 1975.

4. Environmental Assessment of the Domestic Primary Copper, Lead and Zinc Industry. U.S. EPA. Contract No. 68-02-1321. Task No. 38. September 1976. Rough Draft.

5. Handbook of Chemistry and Physics. 32nd Edition. Editor in Chief. C.D. Hodgman. 1950. pp. 1328-1343.

6. Mineral Industry Surveys. U.S. Department of the Interior, Bureau of Mines. Washington, D.C. December 18, 1975.

7. Background Information for New Source Performance Standards: Primary Copper, Zinc, and Lead Smelters. Volume I. Proposed Standards. Environmental Protection Agency. Research Triangle Park, North Carolina. Publication No. EPA-450/2-74-002a. October 1974.

8. Jones, H.R. Pollution Control in the Nonferrous Metals Industry. Noyes Data Corporation, Park Ridge, New Jersey. 1972.

9. Duncan, L.J. and E.L. Keitz. Hazardous Particulate Pollution from Typical Operations in the Primary Nonferrous Smelting Industry. Presented at 67th Annual Mfg. of Air Pollution Control Association. Denver, Colorado. June 9-13, 1974.

10. Exhaust Gases from Combustion and Industrial Processes. U.S. Environmental Protection Agency Technical Center. Durham, North Carolina. EHSD 71-36. October 1971. p. VI-32 to VI-44.

11. Personal communication with Regional EPA Offices.

12. Interim Report on Control Techniques for Lead Air Emissions Development of Lead Emission Factors and 1975 National Lead Emission Inventory. U.S. Environmental Protection Agency. Research Triangle Park, North Carolina. 68-02-1375. June 18, 1976. 25 p.

13. Kirk-Othmer. Lead in Encyclopedia of Chemical Technology. New York, Interscience Publishers. John Wiley and Sons, Inc., 1967.

14. Development Document for Proposed Effluent Limitations Guidelines and New Source Performance Standards for the Primary Copper, Lead, and Zinc Segment of the Nonferrous Metals Manufacturing Point Source Category (Draft). U.S. Environmental Protection Agency. Washington, D.C. Contract No. 68-01-1518. December 1973.

15. Minerals Yearbook. Washington, D.C. U.S. Department of the Interior. Bureau of Mines. 1973.

16. Development for Interim Final Effluent Limitations, Guidelines and Proposed New Source Performance Standards for the Lead Segment of the Nonferrrous Metals Manufacturing Point Source Category. Environmental Protection Agency, EPA 440/1-75/032-a. February 1975.

17. Systems Study for Control of Emissions Primary Nonferrous Smelting Industry. Arthur G. McKee and Co. For U.S. Department of HEW. June 1969.

18. Devitt, T.W. and V. Katari, et al. Trace Pollutant Emissions from the Processing of Metallic Ores. PEDCo-Environmental Specialists, Inc. For U.S. Environmental Protection Agency. Research Triangle Park, North Carolina. Contract No. 68-02-1321. August 1974.

19. Vandegrift, A.E. (Dr.), L.J. Shannon (Dr.), P.G. Gorman (Dr.), E.W. Lawless (Dr.), E.E. Sallee, and M. Reichel. Particulate Pollutant System Study - Mass Emissions, Volumes 1, 2, and 3. U.S. Environmental Protection Agency, (NTIS), Durham, North Carolina. PB-203 128, PB-203 522 and PB-203 521. May 1971. 500 p.

20. Shea, E. P. Source Sampling Report. Emissions from Lead Smelter. Midwest Research Institute. EPA Contract No. 68-02-0228. Task No. 17. 1973.

21. Hussy, R. C. Source Testing. Emissions from a Primary Lead Smelter Blast Furnace. Midwest Research Institute. EPA Contract No. 68-02-0228. Task No. 10. May 1972.

22. Test No. 73-PLD-1. Emission Measurement Branch, U. S. Environmental Protection Agency. Research Triangle Park, North Carolina. Contract No. 68-02-0229.

23. Preferred Standards Path Analysis on Lead Emissions from Stationary Sources (Draft). Emission Standards and Engineering Division. U. S. Environmental Protection Agency. Research Triangle Park, North Carolina. August 9, 1974.

24. Control Program Guideline for Industrial Process Fugitive Particulate Emissions. Preliminary Draft. PEDCo-Environmental Specialists, Inc. Cincinnati, Ohio. EPA Contract 68-02-1375. Task No. 33. December 10, 1976.

25. Preliminary Environmental Assessment of Lead Emissions from Selected Stationary Sources. Final Draft Report. Midwest Research Institute. EPA Contract 68-02-1399, Task 5. June 1977.

26. A Study of Fugitive Emissions from Metallurgical Processes. Midwest Research Institute. Contract No. 68-02-2120. Monthly Progress Report No. 8. Kansas City, Missouri. March 8, 1976.

27. Environmental Assessment of the Domestic Primary Copper, Lead and Zinc Industry, Volume I (Draft). PEDCo-Environmental Specialist, Inc. Contract No. 68-02-1321, Task Order No. 38. Cincinnati, Ohio. September 1976.

28. Danielson, J. A. (ed.) Air Pollution Engineering Manual. 2nd Edition. Air Pollution Control District. County of Los Angeles. For U. S. Environmental Protection Agency Research Triangle Park, North Carolina. AP-40. May 1973.

29. Fejer, M.E. and D.H. Larson. Study of Industrial Uses of Energy Relative to Environmental Effects. Institute of Gas Technology, Chicago, Illinois. For U.S. Environmental Protection Agency. Research Triangle Park, N.C. Contract No. 68-02-0643. July 1974.

30. U. S. Departmemt of Interior, Bureau of Mines. Commodity Data Summaries 1976. Washington D C. 1976.

31. Lund, R. E. et al. Josephtown Electrothermic Zinc Smelter of St. Joe Minerals Corporation. In AIME World Symposium on Mining and Metallurgy of Lead and Zinc, C. H. Cotterill and J. M. Cigan (eds.) AIME. New York. 1970.

32. Hamilton, W. F. and P A. Boys. Control of Airborne Emissions - What's the Cost? No. 74-97. U S. Environ-Mental Protection Agency, Research Triangle Park, North Carolina. 1974.

33. U.S. Environmental Protection Agency. Field Surveillance and Enforcement Guide for Primary Metallurgical Industries. EPA 450/3-73-002. Research Triangle Park, North Carolina. December 1973.

34. Environmental Protection Agency. Compilation of Air Pollutant Emission Factors. Second Edition. Research Triangle Park, North Carolina. Publication No. AP-42. April 1973.

35. Crane, G. B. Control Techniques for Lead Emissions. Draft. U. S. Environmental Protection Agency. Research Triangle Park, North Carolina. February 1971.

36. Yost, K. J., et al. The Environmental Flow of Cadmium and Other Trace Metals. NSF Grant 61-35106. Progress Report, July 1, 1974 to June 30, 1975. Purdue University. West Lafayette, Indiana. 1975.

37. Schlechten, A. W. and A. Paul Thompson. Zinc and Zinc Alloys. In Encyclopedia of Chemical Technology. R. E. Kirk and D. F. Othmer (eds.). John Wiley and Sons. New York. 1964.

38. Yost, K. H. et al. The Environmental Flow of Cadmium and Other Trace Metals. NSF Grant 61-35106. Progress Report, July 1, 1973 to June 30, 1974. Purdue University. West Lafayette, Indiana. 1974.

39. Nichols, G. B. (ed.) The Electrostatic Precipitator Manual. The McIlvaine Company. Northbrook, Illinois. 1976.

40. Information provided by Schroeder, H. J. Bureau of Mines. July 1976. Washington, D. C.

41. Bureau of Mines. Control of Sulfur Oxide Emissions in Copper, Lead, and Zinc Smelting. United States Department of the Interior, Washington, D. C Information Circular 8521. 1971.

42. Exhaust Gases from Combustion and Industrial Processes, Engineering Science, Inc. Washington, D. C. October 2, 1971. Distributed by National Technical Information Center.

43. Jones, H. R. Pollution Control in the Nonferrous Metals Industry. Noyes Data Corporation. 1972.

44. Environmental Protection Agency. Industrial Process Sources. In: Control Techniques for Lead Emissions (Draft). February 1971.

45. Preferred Standards Path Analysis on Lead Emissions from Stationary Sources (Draft). Emission Standards and Engineering Division, Environmental Protection Agency. Research Triangle Park, North Carolina. August 9, 1974.

46. Industrial Gas Cleaning Institute, Inc. Air Pollution Control Technology and Costs. Nine Selected Areas. Environmental Protection Agency. Contract No. 68-02-0301. September 1972.

47. Semarau, K. T. Control of Sulfur Oxide Emissions from Primary Copper, Lead and Zinc Smelters. A Critical Review. Journal of Air Pollution Control Association. 21: June 1971.

48. Taylor, P. L. Characterization of Copper Smelter Flue Dust. (For Presentation at the 69th Annual Meeting of the Air Pollution Control Association). Portland, Oregon. June 27 - July 1, 1976.

49. Calspan Corporation. Assessment of Industry Hazardous Waste Practices in Metal Smelting and Refining Industry. Primary and Secondary Nonferrous Smelting and Refining. 1975.

50. Preferred Standards Path Analysis on Lead Emissions from Stationary Sources (Draft). Emission Standards and Engineering Division, Environmental Protection Agency. Research Triangle Park, North Carolina. August 9, 1974.

51. Scientific and Technical Assessment Report on Cadmium. Environmental Protection Agency. Report No. EPA-600/6-75-003. March 1975.

52. Weisenberg, I. J. and J. C. Serne. Compilation and Analysis of Design and Operating Parameters of the Phelps Dodge Corporation. New Cornelia Branch Smelter, Aja, Arizona for Emission Control Studies. Environmental Protection Agency. Contract No. 68-02-1405. January 1975.

53. Statnick, R. M. Measurement of Sulfur Dioxide Particulate and Trace Elements in Copper Smelter, Converter and Roaster/Reverberatory Gas Streams. Environmental Protection Agency. Publication No. EPA-540/2-74-111. October 1974.

54. Kirk-Othmer. Copper. In: Encyclopedia of Chemical Technology. Volume 6. New York. John Wiley and Sons, Inc. 1968.

55. Shannon, L. J. and P. G. Gorman. Particulate Pollutant System Study, Volume III - Emission Characteristics. Midwest Research Institute. Prepared for U. S. Environmental Protection Agency. Contract No. 22-69-104. 1971.

56. Development Document for Interim Final and Proposed Effluent Limitations Guidelines and New Source Performance Standard for the Ore Mining and Dressing Industry. Point Source Category Vol. 1. Environmental Protection Agency. Washington, D. C. Publication Number EPA/1-75/032-b. February 1975.

57. Personal communication. Kennecott Copper Co. July 14, 1976.

4.4 SECONDARY NON-FERROUS METALS AND ALLOY PRODUCTION

In 1975 an estimated 800 Mg of lead (882 tons) was emitted by secondary non-ferrous metals production, representing about 11 percent of all industrial point source lead emissions. Secondary lead smelting emitted 753 Mg (830 tons), and brass and bronze processes emitted 47 Mg of lead (52 tons) in 1975, not including fugitive emissions.

4.4.1 Secondary Lead Smelting

A substantial portion of the lead used in the United States is produced by secondary smelters. In general, these smelters produce lead alloys and oxides from used lead products, primary battery scrap and lead residues. In 1975, over 548 Gg of lead (604,600 tons) was produced at secondary smelters[1] resulting in the emission of approximately 753 Mg of lead (830 tons), not including fugitive emissions.

4.4.1.1 Process Description - While two-thirds of the output of the secondary lead industry is processed in blast furnaces or cupolas, some smelting is also done in reverberatory furnaces and pot furnaces.[1]

A. Blast Furnaces: Blast furnaces generally produce 18 to 73 Mg per day of lead (20-80 tpd).[2] The furnace shown in Figure 4-24 is a vertical production unit which is charged through a door near the top while blast air is blown in through tuyeres near the bottom. The process is semicon-

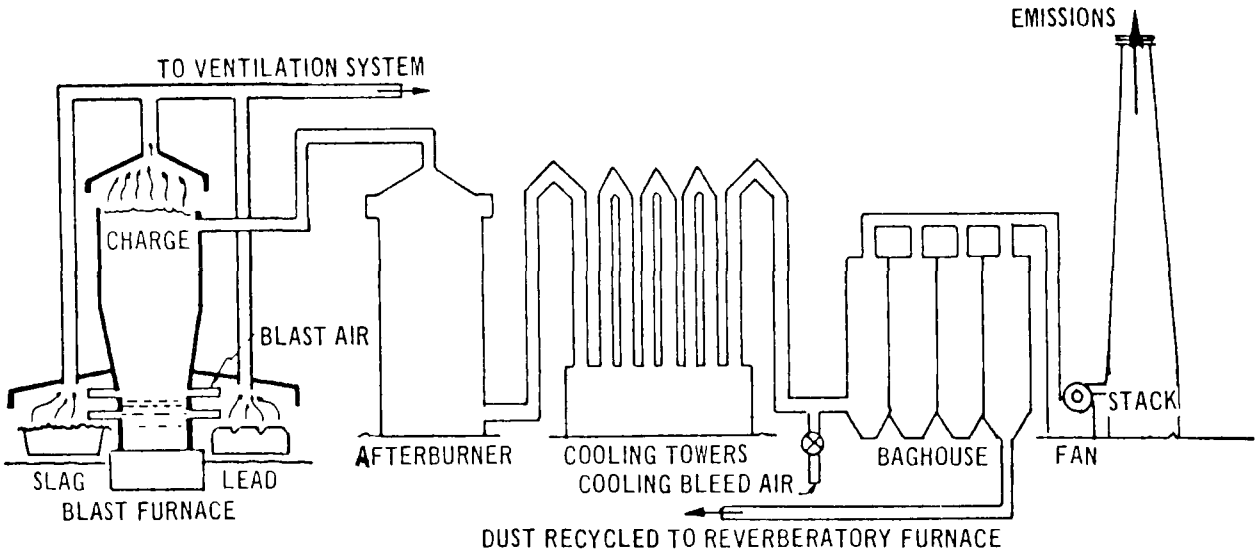

Figure 4-24. Blast furnace with typical air pollution control system.[2]

tinuous in that the charge is added over a period of 1 or 2 days and product is withdrawn nearly continuously during that period. The charge stock consists of oxidized lead and lead scrap to be reduced, plus coke for combustion, limestone, scrap iron, and rerun slag.[3] Approximately 70 percent of the molten charge material is tapped off as hard lead (5 to 12 percent antimony). The remainder includes approximately 18 percent slag and matte, 5 percent water, and 7 percent dust, which may be discharged. About 5 percent of the slag is retained for rerun later.[4]

B. Reverberatory Furnaces: A reverberatory furnace, as shown in Figure 4-25 is merely a device for heating the charge stock by direct contact with the products of combus-

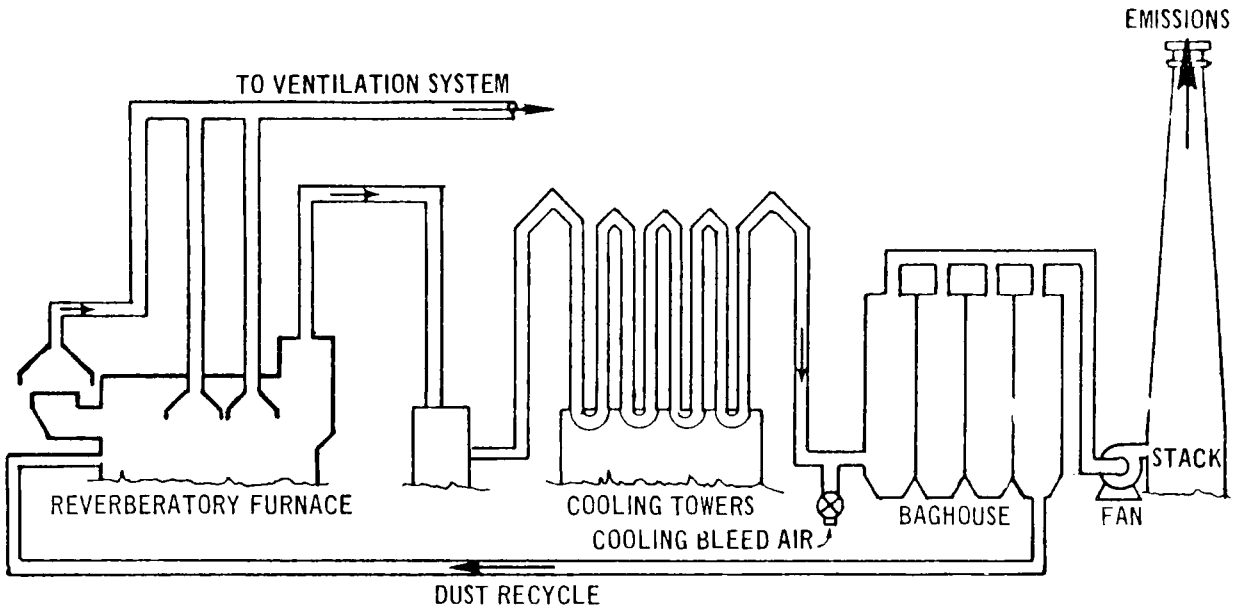

Figure 4-25. Reverberatory furnace with a typical emission control system.[2]

tion of oil and/or gas burners and by radiation from the hot walls of the furnace. The charges may be a mixture of lead scrap, battery plates, oxides, drosses, and lead residues. These are put into the furnace at regular intervals as the mass of the charge becomes fluid. Ordinarily the furnace is kept "tight" to limit the infiltration of air in order to maintain a furnace temperature of 1260°C (2300°F)[4] which generates exit gases at temperatures between 650 and 732°C (1200° and 1350°F).[5]

The molten metal is tapped off at intervals as a semi-soft lead. The continuous operation produces about 49 to 59 kg of metal per square meter of hearth area (10 to 12 lb/ft^2).

A typical reverberatory furnace produces 45 Mg/day of lead ingot (50 tpd).[2] About 47 percent of the charge stock is recovered as metal, 46 percent is recovered as slag, and 7 percent leaves as smoke and fumes.[4]

C. Pot Furnaces: Pot furnaces, as shown in Figure 4-26, generally produce from 0.9 to 45 Mg of lead per day (1 to 50 tpd) and are used primarily for remelting, alloying, and refining processes. Operating temperatures are usually 400 to 480°C (750 to 900°F). In general, since pot furnaces are indirectly fired, their pollution potential is much lower than that of blast or reverberatory furnaces. During melting and holding operations, uncontrolled emissions are low because the vapor pressure of lead is low at the melting temperature. During dross skimming and refining, however, emissions increase substantially.[2]

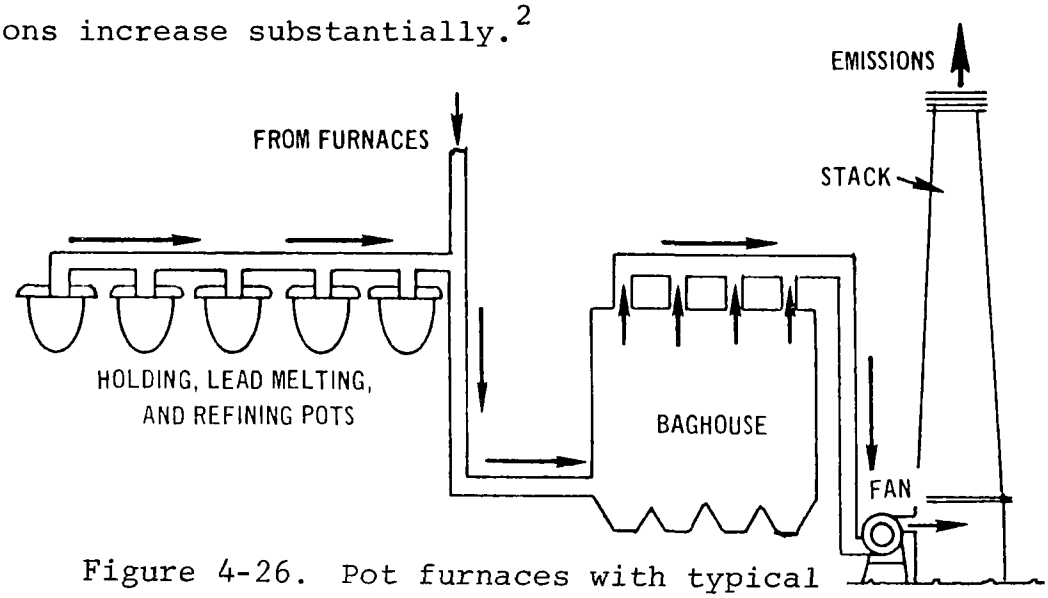

Figure 4-26. Pot furnaces with typical emission control system.[2]

4.4.1.2 Emissions - Temperatures of stack gases from well-sealed blast furnaces may range from 650 to 732°C (1200 to 1350°F).[4] In practice, however, the charge doors of the furnace are frequently left open or removed to accommodate additional charge, thereby reducing the temperature of the exit gases to a range from 204°C to 260°C (400 to 500°F).[5]

In addition to the particulate matter, which consists of smoke, oil vapor, fume, and dust, large volumes of carbon monoxide are produced from partial oxidation of the coke fuel.[4] Table 4-24 summarizes pertinent emission data for blast furnaces.

Blast furnaces used for the recovery of secondary lead are reported to emit approximately 120 g particulate/kg of metal reclaimed (240 lb/ton).[5] Source tests of several furnaces indicate that the average emission factor for lead is approximately 28 g Pb/kg of lead produced (56 lb/ton).[7,8,9,10,11] This indicates that particulate emissions from lead smelters contain about 23 percent lead.

Particulates emitted by reverberatory furnaces are nearly spherical, with a distinct tendency to agglomerate. Particulate emissions from lead reverberatory furnaces are approximately 113 g/kg of metal charged (225 lb/ton).[5] In the absence of any definite data, concentrations of lead in the fumes from reverberatory furnaces are considered to be the same as those from blast furnaces. This assumption gives an emission factor of approximately 26.5 g/kg of lead produced (53 lb/ton). Table 4-25 summarizes the characteristics

Table 4-24. CHARACTERISTICS OF UNCONTROLLED EXHAUST GAS FOR SECONDARY LEAD BLAST FURNACE

Parameters	Standard international units	English units	References
Gas flow rate	7.3 $m^3/s \cdot Mg \cdot h^{-1}$	14,000 scfm/tph product	6
Temperature	730°C	1350°F	5
Moisture content	5% v	5% v	
Grain loading	9 g/m^3	4 gr/scf	10
Particle size	> 3 μm - 58% 2-3 μm - 23% 1-2 μm - 17% 0-1 μm - 2.3%	> 3 μm - 58% 2-3 μm - 23% 1-2 μm - 17% 0-1 μm - 2.3%	10
Lead content of particulate	23% w	23% w	7,8,9,10,11
Emission factors			
° particulate	120 g/kg product	240 lb/ton product	5
° lead	28 g/kg product	56 lb/ton product	

of exhaust gas from reverberatory furnaces.

Based on an average lead emission of 27.5 g/kg product (55 lb/ton) and an overall control efficiency of 95 percent, the production of 548 Gg (604,600 tons) caused the emission of 753 Mg of lead (830 tons) to the atmosphere in 1975, not including fugitive emissions.

4.4.1.3 Fugitive Emissions[13]

A process flow diagram for secondary lead smelting with the potential fugitive emission sources is shown in Figure 4-27. The various sources and types of potential fugitive emissions are encircled and numbered. Some of those sources

Table 4-25. UNCONTROLLED EXHAUST GAS CHARACTERISTICS FOR SECONDARY LEAD REVERBERATORY FURNACE

Parameters	Standard international units	English units	References
Gas flow rate	1.0 $m^3/s \cdot Mg \cdot h^{-1}$ charge	2200 scfm/tph charge	4
Temperature	650-730°C	1200-1350°F	5
Grain loading	1.8-9.0 g/m^3	1-5 gr/scf	4, 12
Lead content of particulate	23% w	23% w	7,8,9,10,11
Emission factors			
° particulate	113 g/kg product	225 lb/ton product	5
° lead	27 g/kg product	53 lb/ton product	

Table 4-26. SECONDARY LEAD SOURCES AND FUGITIVE PARTICULATE EMISSIONS

Lead and iron scrap burning	0.5-1.0 g/kg scrap (1.0-2.0 lb/ton scrap)
Sweating furnace	0.8-1.75 g/kg charge (1.6-3.5 lb/ton)
Reverberatory furnace	1.4-7.85 g/kg charge (2.8-15.7 lb/ton)
Blast furnace	6 g/kg charge (12 lb/ton charge)
Pot furnace	0.02 g/kg charge (0.04 lb/ton)
Casting	0.44 g/kg lead cast (0.88 lb/ton)

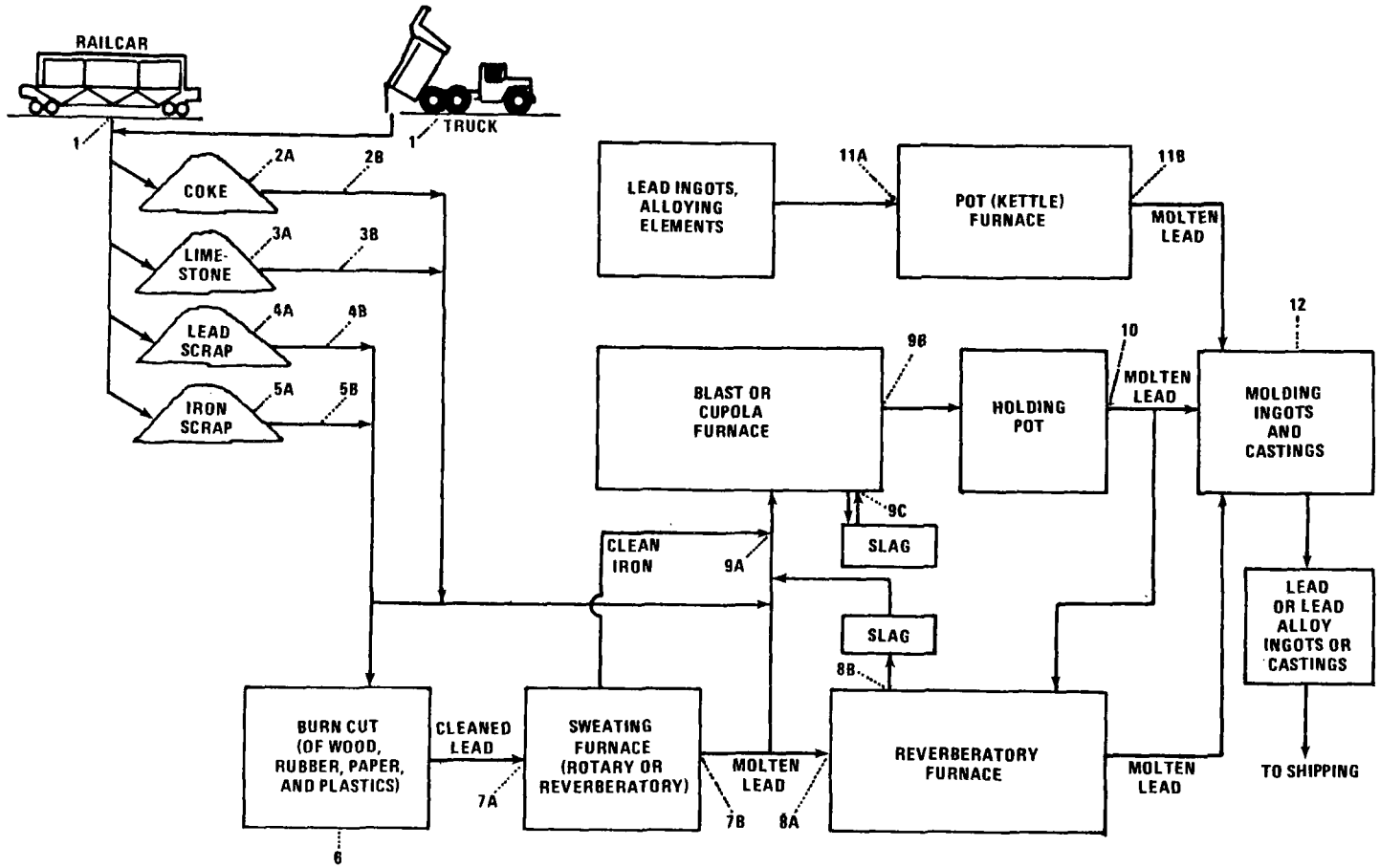

Figure 4-27. Process flow diagram for secondary lead smelting showing potential industrial process fugitive particulate emission points.

are listed in Table 4-26 and show the relative magnitude of uncontrolled particulate fugitive emissions from secondary lead operations.

Data concerning the characterization of fugitive particulate emissions from secondary lead smelting operations are very limited, but stack emission information is available as an approximation of characteristics of the fugitive emissions.

Emissions from smelting furnaces range in size from 0.07 to 0.4 μm and have a mean particulate diameter of 0.3 μm.[14] Emissions from a reverberatory furnace have approximately the same size characteristics and have a lead content of about 23 percent by weight.[15]

Lead and iron scrap burning operations are essentially incinerator processes and thus fugitive emission controls are the same as for incinerators. Better control of operating procedures, such as feed rates or keeping charge doors closed as much as possible, will help alleviate fugitive emission generation. If it is feasible to be selective in choosing only the cleaner scrap, the amount or period of burning time can be reduced and thus result in fewer fugitive emissions. If old and worn equipment parts are allowing the escape of emissions, the replacement of these parts may help reduce fugitive emissions. The increase of the exhaust rate of the primary collection system will also aid in the control of fugitive emissions. Also, fixed or movable hoods or an enclosed building with evacuation to a fabric filter, will normally control fugitive emissions.

4.4.1.4 Control Techniques - At well-collected secondary lead smelters, baghouses or wet scrubbers are used to collect dust and fumes from the furnaces. When fabric filters are used to control blast furnace emissions, they are normally preceded by an afterburner to incinerate hydrocarbons that might blind the fabric and to convert the carbon monoxide to carbon dioxide. Afterburners are not needed for reverberatory furnaces, since the excess air and temperature are usually sufficient to incinerate carbon monoxide and hydrocarbons.[2]

A. Wet Collectors: Although wet scrubbers have shown collection efficiencies as high as 95 to 98 percent when treating lead fumes having particles no smaller than 0.5 μm, their collection efficiencies for smaller particles is lower.[4] High levels of energy input are required to achieve a high-efficiency collection of submicron particles. Pressure differences on the order of 7.5 to 24.9 kPa (30-100 in. H_2O) are required to provide good cleanup. In addition, water scrubbing may cause corrosion problems. SO_2 in the gas stream will be absorbed into the scrubbing water to form dilute sulfurous acid. Therefore it may be necessary to add lime, caustic soda, or similar chemicals to the water to minimize corrosion. The dust is recovered as a dilute slurry. If the lead oxide in the dust is to be recovered, some form of separator must be provided.[3]

If the sulfur content of the charge is relatively high, the scrubber provides an advantage over a fabric filter since it may be designed solely for absorption of SO_2. Sulfur will arise from the fuel charge to the furnace and from lead sulfate or sulfuric acid used in lead storage batteries. In these cases, however, it is likely the scrubber would be placed after an existing filter.[3]

B. Afterburners: Afterburners are oil- or gas-fired burners placed directly above the charging door of the blast furnace. This section should be sufficiently tall to allow for a residence time of approximately 0.5 second and should be equipped to raise the gas temperature to at least 650°C (1200°F) and as high as 1100°C (2000°F) to ensure proper incineration of the hydrocarbons and carbon monoxide.[3]

C. Fabric filters: Shaker-type baghouse filters are the most effective means of controlling lead fume emissions from secondary furnace operations. Collection efficiencies may exceed 99 percent, depending upon particle size and inlet loading.[5] In addition, because the fabric filter is a dry collection device, the lead oxide collected is suitable for return to the furnace for further processing.

The hot gases from the furnace must first be cooled, however, to a temperature that can be tolerated by the filter material. Dacron^R bags, for instance, may be oper-

ated only at temperatures up to 150°C (300°F). Cooling may be done by dilution with ambient air, heat exchange, or a combination of these.[3] Installations with filtering velocities of 4 cm/s (2 fpm) have proved satisfactory in long-term performance.[3]

Performance of fabric filters on a natural-gas-fired reverberatory furnace is indicated by Table 4-27. The charge to the furnace includes lead oxide dust in addition to lead battery plates. The hearth is about 7.6 meters (25 feet) long and 2.4 meters (8 feet) wide with the roof about 0.9 meters (3 feet) above the melt. The natural gas burners operate at full capacity except for brief morning periods during which the ductwork is cleaned. The gas firing rate is 13.6 m^3/min (480 cfm). The furnace is operated under a slight draft to prevent fugitive dust emissions. The charge increments are approximately 270 to 320 kg (600 to 700 lbs). The feed is loaded into a hopper over the feed ram with a front loader; the ram operates continuously. The feed rate is controlled by the buildup of unmelted feed in the front of the furnace.

The exhaust gases from the reverberatory furnace pass through a brick flue, a cooling tower, three water-cooled cyclones, and then to a baghouse. The baghouse has four sections of 120 bags per section. Design air flow rate is 850 m^3/min (30,000 cfm). Bag shaking time is 8 minutes per

Table 4-27. PERFORMANCE OF A FABRIC FILTER ON A SECONDARY LEAD REVERBERATORY FURNACE[2]

Run	1	2	3	Average
Lead production, Mg/hr (tons/hr)	1.9 (2.1)	6.4 (7.1)	1.9 (2.1)	3.4 (3.8)
Stack effluent:				
Flow rate, dscm/min (dscfm)	664.5 (23,480)	639.6 (22,600)	564.3 (19,940)	622.8 (22,010)
Temperature, °C (°F)	51.1 (124)	55.6 (132)	47.2 (117)	51.3 (124)
Particulate emissions:				
Probe and filter catch				
mg/dscm (gr/dscf)	5.49 (0.002)	7.55 (0.003)	9.61 (0.004)	7.44 (0.003)
mg/m^3 (gr/acf)	4.81 (0.0021)	6.18 (0.0027)	8.24 (0.0036)	-
kg/hr (lb/hr)	0.222 (0.489)	0.288 (0.635)	0.32 (0.721)	0.279 (0.615)
kg/Mg of product (lb/ton of product)	0.102 (0.204)	0.132 (0.265)	0.150 (0.300)	0.128 (0.256)

half hour, with no shaking during the last 22 minutes of a half-hour cycle. Each section is cleaned for 2 minutes. The design collection efficiency is 99.9 percent.

4.4.1.5 Control Costs - Model plant cost analyses for emission control equipment are performed for the two major furnaces used in the secondary lead industry: reverberatory and blast furnaces.

A. Reverberatory Furnace - A reverberatory furnace with a capacity of 45 Mg/day (50 TPD) is a typical model size for the emission control cost analysis. Exhaust flow from this type and size of furnace is 15.8 m^3/s at 730°C (33,500 acfm at 1350°F). Emissions are about 216 kg/h (475 lb/hr) particulate, 23 percent of which is lead. These vent gases are cooled by radiant U-tube coolers to 260°C (500°F), then further cooled by dilution air to 218°C (425°F) before they enter a fabric filter. The fabric filter is designed to clean 9.3 m^3/s (19,700 acfm) at a filter velocity of 1 cm/s (2 fpm). It is equipped with bags to withstand 218°C (425°F) temperature and mechanical-shaker cleaning. The 75-hp fan system will handle 9.3 m^3/s (19,700 acfm) at a system pressure drop of 3.5 kPa (14 in. W.G.). This level of control (>99 percent) will enable the source to meet the average state particulate limitation of 2.4 kg/h (5.2 lb/hr).

The capital costs for the above system are estimated at $470,000, including fabric filter, U-tube cooler, fan system, and ductwork.[a]

[a] See Section 2.9 and Appendix B for discussion of cost analyses. Detailed cost studies are available from EPA upon request.

The annualized costs are estimated at $194,000, including utilities, labor, maintenance, overhead, and fixed costs (with capital recovery).[a] If a dust recovery credit of $0.11/kg ($0.05/lb) is included, the annual credit amounts to $141,000; thus, the annual cost is $53,000. The annual operating time is assumed at 6,000 hours and annual labor is estimated at 3000 hours.

The capital and annualized costs are expressed below in terms of exhaust flow rate and annual labor hours:

S.I. units

$$\text{Capital, } \$ = 8.97 \times 10^4 V^{0.6}$$

$$\text{Annualized,}^b \$ = 807V + 19.6H + 2.34 \times 10^4 V^{0.6}$$

$V = m^3/s$ @ 730°C
H = annual labor hours

$5 < V < 50$
range

English units

$$\text{Capital, } \$ = 906Q^{0.6}$$

$$\text{Annualized,}^b \$ = 0.364Q + 19.6H + 236Q^{0.6}$$

Q = acfm @ 1350°F
H = annual labor hours

$10{,}000 < Q < 100{,}000$
range

---

[a] See Section 2.9 and Appendix B for discussion of cost analyses Detailed cost studies are available from EPA upon request.

[b] Does not include any credit for recovered dust.

B. Blast Furnace - A 45 Mg/day (50 TPD) capacity blast furnace is selected as the model plant size to determine the control costs. The furnace exhausts 15.1 m^3/s at 260°C (32,000 acfm at 500°F) including charge-door draft air. Particulate emissions are estimated at 230 kg/h (504 lb/hr) with a 23 percent by weight lead content. The exhaust gases enter a direct flame afterburner equipped with a heat recovery unit. The afterburner is designed for a residence time of 0.5 seconds and an operating temperature of 980°C (1800°F) to allow complete combustion of carbon monoxide and hydrocarbons. The heat exchanger recovers 50 percent of the total stream heat content, thereby reducing the temperature of the gas to 650°C (1200°F). These gases enter a carbon steel U-tube cooling system designed to reduce the temperature of 25.8 m^3/s (54,600 acfm) from 650°C to 260°C (1200°F to 500°F). The gases are cooled further to 150°C (300°F) by diluting with ambient air prior to entering an automatic shaker fabric filter. The fabric filter is designed to handle 24.6 m^3/s (52,000 acfm) at a filtering velocity of 1 cm/s (2 fpm). It is equipped with Dacron^R bags. A 200-hp fan system provides adequate service for a total system pressure drop of about 3.8 kPa (15 in. W.G.). This control technique will bring the source into compliance with an average state regulation of 3.9 kg/h (8.6 lb/hr) of particulate emissions with an overall efficiency of more than 99 percent.

The capital costs for the above system are estimated at $1.24 million, including afterburner, heat recovery unit, U-tube cooler, fabric filter, fan system, and ductwork.[a]

The annualized costs are estimated at $615,000, including utilities (with natural gas requirements for afterburners), maintenance, labor, overhead, and fixed costs (with capital recovery). This estimate is based on 6000 hours of total operating time, 3000 hrs/yr annual labor, and does not include value of recycled dust. Assuming a value of 11¢/kg (5¢/lb) for the recycled dust, an annual credit of $150,000 should be considered in the overall cost of operation.

The capital and annualized costs (including recycle credit) are expressed below in terms of exhaust volume, annual labor hours, and production rate:

S.I. units

$$\text{Capital, } \$ = 2.43 \times 10^5 V^{0.6}$$

$$\text{Annualized, } \$ = 15{,}400V + 63{,}500V^{0.6} + 19.6H - 13.1M$$

$V = m^3/s$ at 260°C
H = annual labor hours
M = annual production, Mg

$5 < V < 50$
range

English units

$$\text{Capital, } \$ = 2460Q^{0.6}$$

$$\text{Annualized, } \$ = 7.25Q + 642Q^{0.6} + 19.6H - 11.9P$$

[a] See Section 2.9 and Appendix B for discussion of cost analyses. Detailed cost studies are available from EPA upon request.

Q = acfm at 500°F
H = annual labor hours
P = annual production rate, tons

$10^4 < Q < 10^5$
range

4.4.1.6 Impacts

A. Emission Reduction

Particulate emission reductions by air pollution control systems on blast furnaces are about 120 kg/Mg (240 lb/ton) of product and 110 kg/Mg (220 lb/ton) of product for the reverberatory furnace. Lead content of these emissions are 23 percent by weight.

B. Energy Impact

Energy requirements for the production of secondary lead is not available . However, primary lead blast and reverberatory furnaces consume 7.5 GJ/Mg of lead (7.5 MM Btu/ton) and 5.0 GJ/Mg of lead (5.0 MM Btu/ton), respectively.[16] Energy consumption for secondary lead processes may be similar. Fabric filter systems installed on the model blast and reverberatory furnaces require 0.30 GJ/Mg (0.30 MM Btu/ton) and 0.10 GJ/Mg of lead (0.10 MM Btu/ton), respectively.

C. Wastewater Impact

Process wastewater data are not available; however, no additional wastewater impact is encountered when fabric filters are utilized. When high-energy wet collectors are used, settling

tanks and ponds have been used to precipitate the collected solids. The precipitate is removed, dried, and fed back to the furnace. Scrubbing water will pick up sulfur dioxide from the gas stream causing the water to become acid. Alkali can be added to the scrubber to control pH. Salts that precipitate with the collected dust are also returned to the furnace and usually become part of the slag.[2]

D. Solid Waste Impact

No process solid waste data are available; however, dust collected by control equipment is recycled. The total solid waste generation by air pollution control equipment amounts to about 110 kg/Mg product (220 lb/ton) for the reverberatory and blast furnaces.

4.4.2 Brass and Bronze Industry

Brass and bronze are generally considered to be copper-based alloys with zinc, tin, and other metals such as lead, aluminum, manganese, and silicon as secondary components. A variety of brass and bronze alloys are produced each year. In 1975, production of brass and bronze ingots was estimated at 210 Gg (232,000 tons), consuming 12.2 Gg of refined lead (13,400 tons). Twenty-eight percent of the total production in 1974 consisted of tin bronze, aluminum bronze, and nickel bronze. The remaining 72 percent of total production consisted of leaded red and semi-red brass, high-leaded tin bronze, yellow brass, and manganese bronze.[1]

The alloys are produced in reverberatory, rotary, crucible, or electric induction furnaces. The tin bronze, aluminum bronze, and nickel bronze do not contain lead, and production of these alloys does not generate significant lead emissions. The other alloys, leaded red brass, semi-red brass, high-leaded tin bronze, and leaded nickel bronze, contain significant amounts of lead. Production of these alloys generated 47 Mg of lead emissions (52 tons) in 1975.

4.4.2.1 Process Description - Figure 4-28 illustrates the processes involved in production of brass and bronze ingots, including preparation of raw materials.

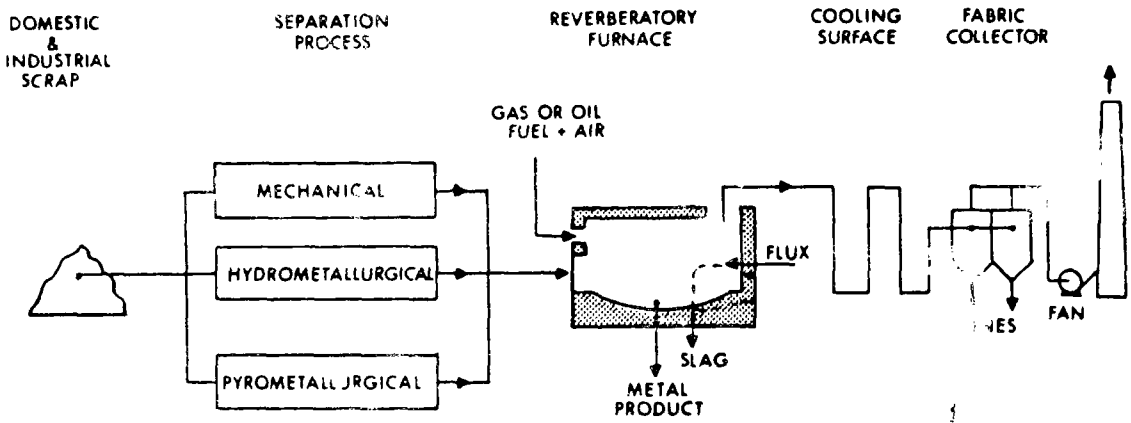

Figure 4-28. Process flow sketch of brass/bronze reverberatory furnace.

The basic raw material consists primarily of copper based alloy scrap. The scrap is treated by mechanical, hydrometallurgical, or pyrometallurgical methods to remove contaminants. Most raw material scrap is treated by mechanical methods such as hand sorting, stripping, shredding, magnetizing, and briquetting. These methods cause little or no atmospheric emissions. The hydrometallurgical methods include a liquid medium and cause no air pollution. Some amount of raw material is cleaned by the pyrometallurgical methods, which include sweating, burning, drying, and blast furnace or cupola processing. Usually a charge containing slags and skimmings is treated in blast furnaces. These processes, which use external fuel, are major sources of air pollution.

Brass and bronze ingots are produced from a number of furnaces through a combination of melting, smelting, refining, and alloying of the processed scrap material. Direct-fired furnaces, such as the reverberatory and rotary types, and indirect-fired furnaces, such as the crucible and electric induction types, are used for ingot production. Figures 4-29 and 4-30 show typical furnaces used in brass and bronze production. The scrap materials, along with solid or liquid fluxes, are charged to the furnace. The fluxes can be nonmetallic materials, pure metals, or alloys. Heat is

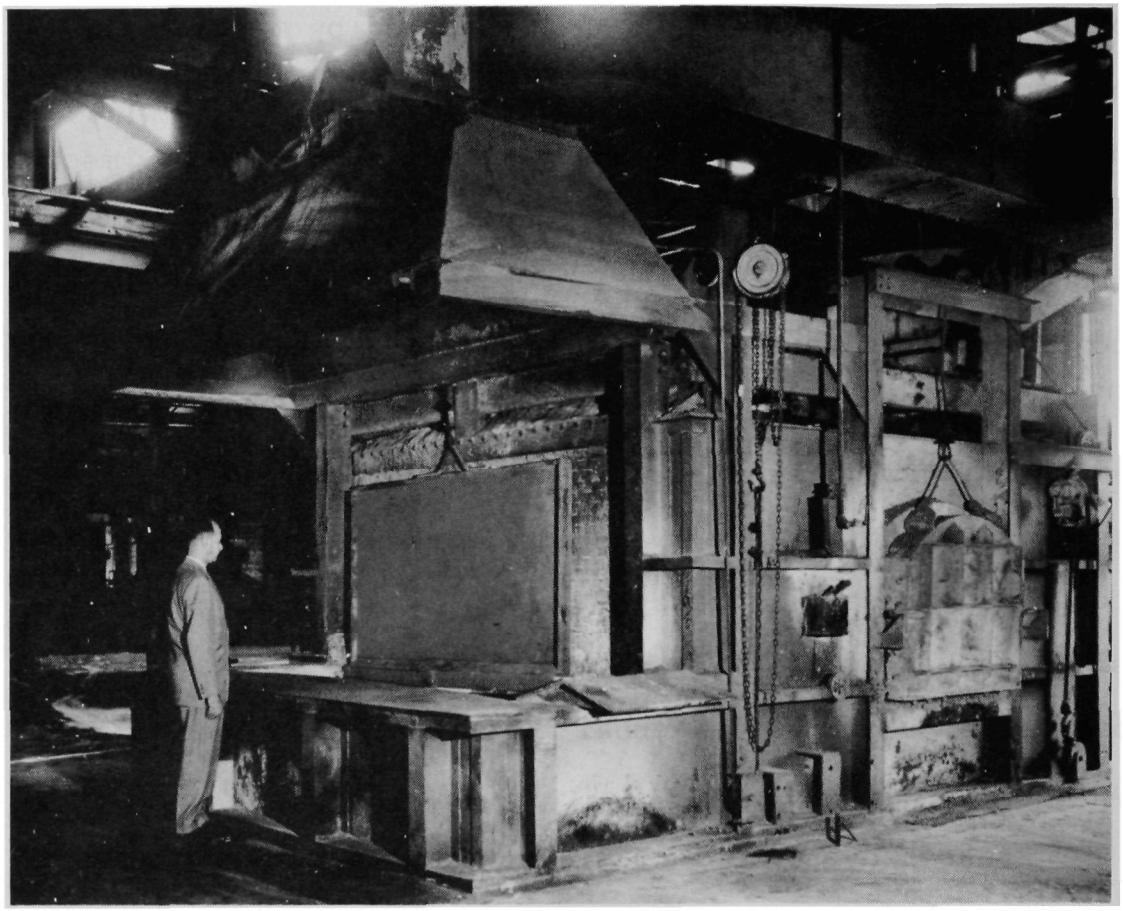

Figure 4-29. Brass reverberatory furnace.

(Courtesy of H. Kramer Co., Chicago)

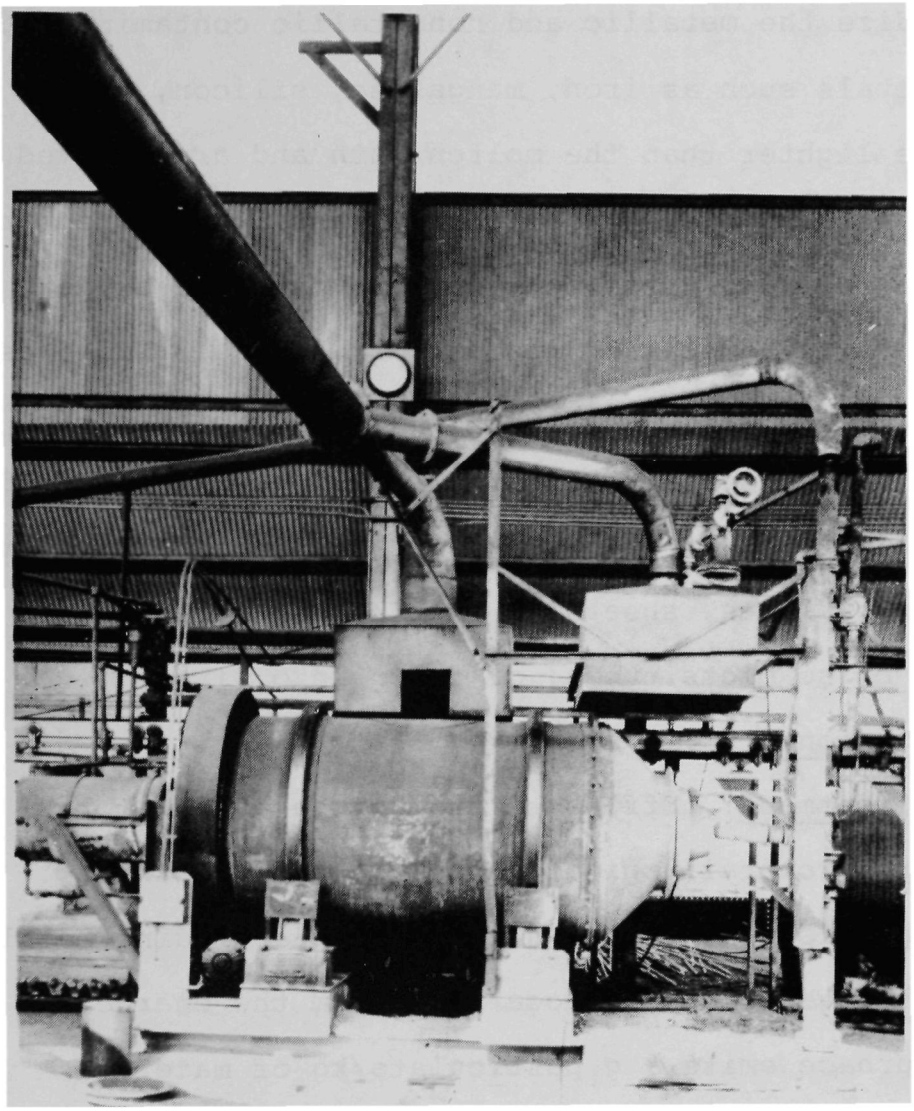

Figure 4-30. Gas-fired rotary brass melting furnace.

(Courtesy of H. Kramer Co., Chicago)

supplied by burners fueled with gas or oil. Molten metal is formed and refined by blowing compressed air into the metal bath to oxidize the metallic and nonmetallic contaminants. Oxides of metals such as iron, manganese, silicon, and aluminum are lighter than the molten bath and are removed as slag. Fluxes such as charcoal, borax, sand, limestone, and caustic soda provide entrainment for the metallic oxide impurities. Virgin metal or specialized scrap is added as required for modification of the alloy. The molten metal is poured into molds and cast at temperatures ranging from 650 to 1320°C (1200 to 2400°F).[17] After casting, the shapes may be rolled into plates, sheets, or strips; extruded into rods, bars, or seamless tubes; or drawn into wire.

4.4.2.2 Emissions

A. Scrap Treatment: Effluents from preparation of raw materials by pyrometallurgical scrap treatment methods contain combustion products and impurities including metallic fumes, halogens, and hydrocarbons from the charge.[17] The blast furnace emits 9 g particulate/kg of material charged (18 lb/ton) and the cupola emits about 36.5 g particulate/kg of charge (73 lb/ton).[18] The major component of the emission is zinc oxide. Data are not available on lead contents of effluents from the furnace process. Source tests in Los Angeles indicate that the uncontrolled emissions

from burning scrap contain particulate matter in concentrations as high as 67 g/m^3 (29 gr/scf) at 12 percent CO_2.[19] Since a small fraction of the total industry scrap is processed and high control efficiency is applied in pyrometallurgical methods, the overall lead emissions from raw material preparation are very small.

B. Ingot Furnace: Emission rates from brass and bronze furnaces depend on the type of fuel and on furnace temperatures. Pollutants are emitted during charging, slag tapping, alloying, and pouring operations. The emissions contain metal oxide fumes, combustion products, carbon particles, mechanically produced dust, and unburned fuel oil mist. The metal oxides are present in submicron size as condensed fume.

In direct-fired furnaces, the very hot and high-velocity combustion gases come in direct contact with the metals in the charge, thus significant amounts of metal oxides are released into gaseous effluents. Reverberatory furnaces emit greater quantities of air pollutants than the other furnaces.[17] Electric induction furnaces create insignificant amounts of pollution. Typical quantities of particulates emitted from reverberatory, rotary, crucible, and electric induction furnaces are given in Table 4-28.

Table 4-28. PARTICULATE EMISSIONS FROM BRASS AND BRONZE INGOT PRODUCTION [18]

Type of furnace	Particulate emission factor, g/kg charge	Particulate emission factor, lb/ton charge
Reverberatory	35	70
Rotary	30	60
Crucible	6	12
Electric induction	1	2

The exhaust gas parameters for a reverberatory furnace are given in Table 4-29.

Information on the types of products produced from different furnaces is not available; however, about 90 percent of brass and bronze production is done in reverberatory furnaces.[1] On the average about 80 percent by weight of the charge is converted to product.

Zinc oxide constitutes 60 to 95 percent of the particulate material collected in a control system, and lead oxide content normally ranges from 6 to 8 percent.[17] Flue dust samples collected by Bureau of Mines contained 2.5 to 8.5 percent lead.[22,23] Tests conducted in Los Angeles County indicated a 15 percent lead oxide content of fume from representative red and yellow brass furnaces and a 56 percent lead oxide content of particulate from producing high-leaded alloys.[19]

Table 4-29. CHARACTERISTICS OF UNCONTROLLED EXHAUST GAS FROM A BRASS AND BRONZE REVERBERATORY FURNACE

Parameters	Standard international units	English units	References
Gas flow rate[a]	4.5 $m^3/s \cdot Mg \cdot h^{-1}$ product	8600 acfm/tph product	3
Temperature[b]	925-1315°C	1700-2400°F	21
Grain loading	0.12-9.4 g/m^3	0.05-4.1 gr/scf	17
Particle size distribution	0.03-0.5 μm (majority)	0.03-0.5 μm (majority)	19
Lead content of particulate[c]	high-leaded 58% w		19
	yellow and red 15% w		19
	other brass and bronze 7% w		17,22,23
Emission factors			
° particulate	35 g/kg charge	70 lb/ton charge	18
° lead	Determine from percentage above		

[a] Flow rates can vary according to the hooding arrangement required. Volume given is at 120°C (250°F).

[b] Temperature is usually reduced to 120°C (250°F).

[c] Dependent upon lead content of the product.

For 1974, an estimated 54 Mg of lead (58 tons) was emitted by this industry, as shown in Table 4-30. With a 10 percent production decrease, the 1975 lead emissions to the atmosphere were 47 Mg (52 tons).

The lead emission factor for high-leaded alloys produced by a reverberatory furnace is estimated at 25 g/kg product (50 lb/ton); for red and yellow brasses the factor is 6.6 g/kg product (13.2 lb/ton). Based on an average 7 percent particulate lead content, the lead emission factor for the production of other alloys in reverberatory furnaces is estimated at 2.5 g/kg (5.0 lb/ton).

4.4.2.3 Fugitve Emissions[13]

Figure 4-31 shows a process flow diagram for brass and bronze production with the potential fugitive particulate emissions as dotted lines. Some of the major sources of fugitive emissions include insulation burning, reverberatory furnace, and rotary furnaces. It is estimated that fugitive emissions are equal to 5 percent of an operation's stack emissions. For a plant producing 30,000 Mg (33,000 tons) of lead per year, the uncontrolled process fugitive particulate emissions are 354 Mg (389 tons) per year. Lead particulates are between 1.0 and 12.0 percent by weight of the total particulate emissions.

Better control of operation parameters and procedures such as tapping at the lowest possible melt temperature will

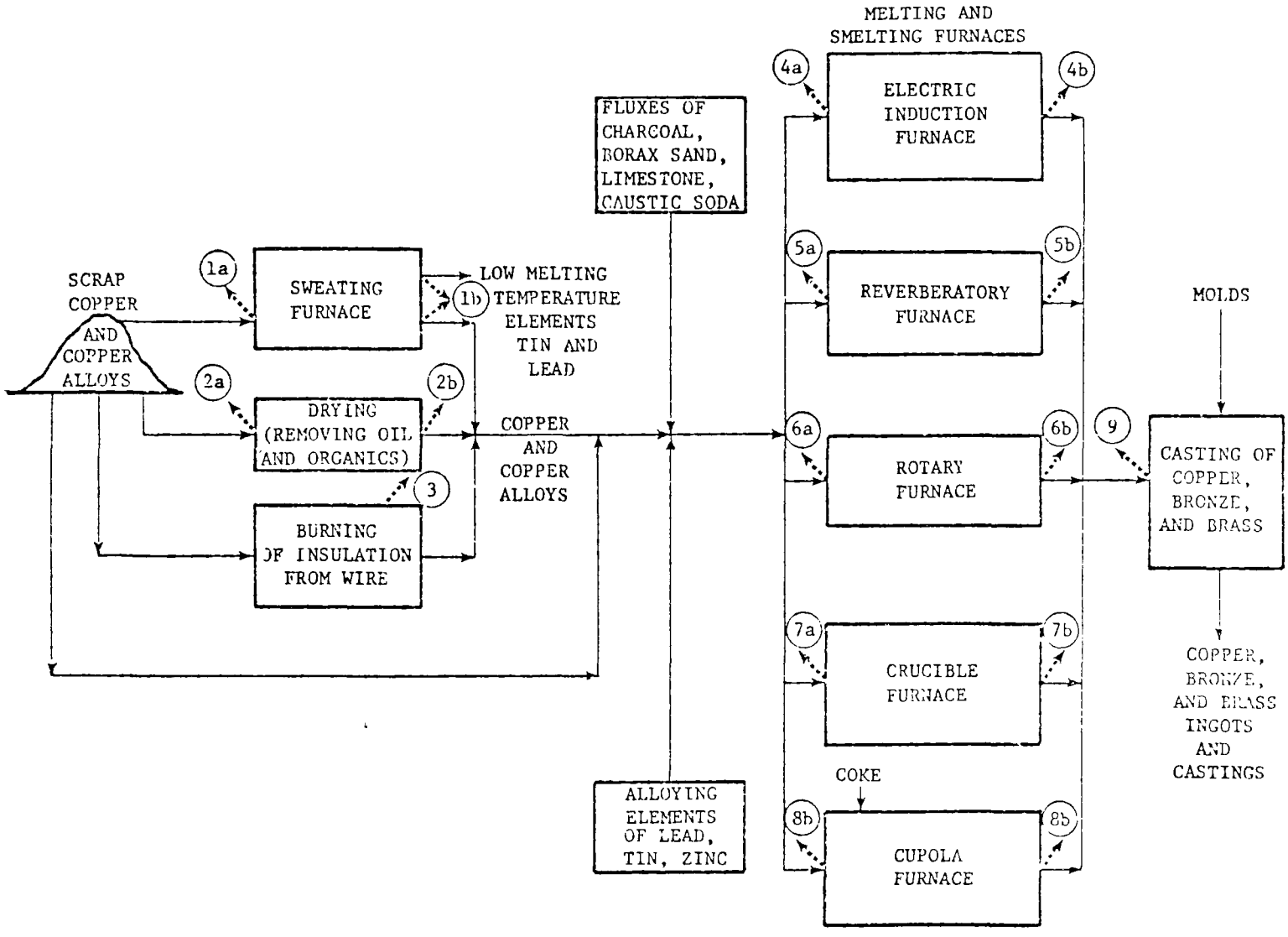

Figure 4-31. Process flow diagram for secondary brass/bronze (copper alloy) production showing potential industrial process fugitive particulate emission points.

often control fugitive emissions from various furnace tapping operations. Fixed or movable hoods over the tapping operations will provide for better control of fugitive emissions. In addition, curtains which help direct fugitive emissions into the hood will increase capture efficiencies.

4.4.2.4 Control Techniques - The mechanical and hydrometallurgical processes cause little or no air pollutant problems and require no control. Pyrometallurgical processes release some air pollutants and need control. Baghouses are effective are the generally accepted air pollution control device in the brass and bronze industry. Wet scrubbers and electrostatic precipitators have also been particularly successful in collection of zinc oxide fumes.[23]

A. Fabric Filters: Generally, the fumes are captured by the auxiliary hoods and vented through a cooling device to a baghouse. Temperature limitations of the filter fabrics require cooling and dilution of the incoming particulate-laden air stream. The initial cooling is often accomplished by means of water sprays. One cooling system consists of a water-jacketed cooler followed by air-cooled radiation convection columns.[19]

Tests conducted on baghouses showed efficiencies ranging between 95 and 99.6 percent. Fabric filters are usually tubular. A critical design factor for a tubular baghouse is the filtering velocity. A filter velocity of

Table 4-30. LEAD EMISSIONS FROM BRASS AND BRONZE PRODUCTION IN 1974

Type of product	1974 Production,[1] Gg	1974 Production,[1] 10^3 ton	Lead content,[19] % wt	Lead emissions,[a] Mg	Lead emissions,[a] tons
Red, yellow, manganese	141	155	15	26.1	28.8
High-leaded	30	33.2	56	20.9	23.0
Other brass and bronze	66	73.1	7	5.8	6.4
Total lead emissions				52.8	58.2

[a] Based on 80 percent yield from charge, average particulate emissions of 33 g/kg charge (66 lb/ton), and an assumed overall control efficiency of 97 percent.

1.3 cm/s (2.5 fpm) is recommended for collecting relatively small concentrations of fumes from brass furnaces. Larger concentrations of fumes require a lower filtering velocity.[19]

Normal pressure drop ranges from 0.5 to 1.5 kPa (2 to 6 in. H_2O). Maintenance problems with baghouses in the brass and bronze industry are insignificant. Dacron^R is the most widely used fabric though many other materials are employed.

Table 4-31 indicates performance of fabric filters on reverberatory furnaces. The furnace capacity is approximately 91 metric tons (100 tons) for brass. Air lancing is used to remove the iron from the melt. Exhaust gases pass from the furnace directly through a 27-37 meters (30-40 yards) refractory flue which serves as an afterburner. From that section of the flue, the gases pass through approximately 9.1 meters (30 feet) of water jacketed ductwork, and through a series of U-tube exchange elements upstream from a baghouse. The U-tubes are approximately 9.1 meters (30 feet) high and are used to achieve the desired baghouse inlet temperature [71°C to 107°C (160°F to 225°F)]. The tubes permit temperature control without the use of water sprays.

The baghouse has 36 compartments with 25 bags per compartment. Two suction fans draw approximately 1250 m^3/min (44,000 cfm) of gas through the baghouse. The baghouse uses electrically timed mechanical shakers for

Table 4-31. PARTICULATE EMISSIONS FROM A BRASS AND BRONZE REVERBERATORY FURNACE

Run	1	2	3	4	Average
Test time, min.	120	700	747	780	656
Heat time, min.	1140	1183	1326	1372	1255
Ingots produced/heat, metric tons (tons)	44.6 (49.1)	54.4 (59.9)	49.0 (56.4)	49.0 (53.9)	49.8 (54.8)
Stack effluent:					
Flow rate, dscm/min (dscfm)	779 (27,500)	853 (30,100)	719 (25,400)	767 (27,100)	779 (27,500)
Temperature, °C (°F)	47.8 (118)	41.7 (107)	41.1 (106)	45 (113)	43.9 (111)
Particulate emissions:					
Probe and filter catch					
mg/dscm (gr/dscf)	13.7 (0.006)	11.4 (0.005)	16.0 (0.007)	9.15 (0.004)	13.7 (0.006)
mg/m^3 (gr/acf)	11.4 (0.005)	11.4 (0.005)	13.7 (0.006)	9.15 (0.004)	11.4 (0.005)
kg/hr (lb/hr)	0.703 (1.55)	0.567 (1.25)	0.626 (1.46)	0.44 (0.99)	0.595 (1.31)
kg/metric ton of product (lb/ton of product)	0.299 (0.60)	0.205 (0.41)	0.215 (0.43)	0.210 (0.42)	0.232 (0.46)

cleaning. The 36 compartments are divided into 3 separate systems for cleaning. The total cleaning time per system is 30 minutes. Each compartment shakes for 60 seconds, and the lapsed time between shaking of successive compartments within a system is 90 seconds.

B. Wet Collectors: High energy venturi scrubbers can be used for high-efficiency cleaning. Pressure drops across the scrubber of 12.5 to 14.9 kPa (50 to 60 in. H_2O) and water rates to the scrubber throat ranging from 1.4 to 2 l/m^3 (10 to 15 gpm/10^3 acfm) are required.[20]

C. Electrostatic Precipitators: Electrostatic precipitators are often highly efficiency, but are not ideally suited for the brass and bronze industry, mainly because of the low exhaust gas flow rates.[20] Lead oxide is particularly difficult to collect because of its relatively high resistivity.[19] Information from a few installations that use wet scrubbers and electrostatic precipitators indicates significant maintenance problems and low efficiencies.

4.4.2.5 Control Costs - A reverberatory furnace rated at a production capacity of 45.3 Mg/day (50 TPD) is considered the typical model size to determine control costs. The furnace exhausts 18.4 m^3/s at 1090°C (39,000 acfm at 2000°F) and emits 83 kg/h (183 lb/hr) particulate matter, of which 15 percent is lead. The gases enter a quench tower, where they are cooled to 120°C (250°F) before they enter an

insulated fabric filter. The shaker-type fabric filter is designed to handle 8.5 m^3/s (18,000 acfm) at a superficial filter velocity of 1.2 cm/s (2.5 fpm). A fan system rated at 8.5 m^3/s (18,000 acfm) and a system pressure drop of 1.8 kPa (7 in. W. G.) is also required. This control technique will permit compliance with the average state particulate limitation of 3.6 kg/h (7.9 lb/hr), with an overall efficiency of over 99 percent.

Capital costs are estimated at $407,000, including quench tower, pump, hold tank, collector, insulation, fan system, and ductwork.[a]

Annualized costs are estimated at $202,000, including utilities, labor, maintenance, overhead, fixed costs (with capital recovery), and solid waste disposal in sealed barrels. An annual operating time of 6000 hours and annual labor of 2000 hours are assumed.

Capital and annualized costs are expressed below in terms of exhaust flow rate, annual labor hours, and furnace capacity:

S.I. units

Capital, $\$ = 7.1 \times 10^4 V^{0.6}$

Annualized, $\$ = 587V + 1030\ M + 19.6H + 2.1 \times 10^5 V^{0.6}$

$V = m^3/s$ at 1090°C
H = annual labor hours
M = furnace capacity, Mg/day product

Range: $6 < V < 60$
range

[a] See Section 2.9 and Appendix B for discussion of cost analyses Detail cost studies are available from EPA upon request.

English units

Capital, $ = 716 $Q^{0.6}$

Annualized, $ = 0.277Q + 932T + 19.6H + 187Q^{0.6}$

Q = acfm at 2000°F
H = annual labor hours
T = furnace capacity, TPD product
(for solid waste disposal costs)

Range: 13,000 < Q <130,000
range

4.4.2.6 Impact

A. Emission Reduction

Particulate emission reductions for control systems on reverberatory furnaces are estimated at 35 kg/Mg product (70 lb/ton) with a lead content ranging between 7 and 58 percent by weight, depending on the product specification.

B. Energy Impact

The total energy required to produce brass at one plant is about 3.0 GJ/Mg product (3.0 MM Btu/ton) for a 46 Mg (50 ton) capacity furnace producing 2.3 Mg/h (2.5 tph) of brass.[19] The fabric filter system on the model furnace requires about 0.05 GJ/Mg product (0.05 MM Btu/ton) to operate fans and auxilary equipment. Therefore, the energy impact is about 1.7 percent. If high energy wet scrubbers, operating at 12 kPa (50 in. WG) pressure drop, were used the energy impact would be about 12 percent.

C. Wastewater Impact

Fabric filters do not generate additional wastewater and wet collectors are used rarely if at all. No process wastewater data are available however no impact is expected by the application of control systems.

D. Solid waste Impact

Solid wastes generated by brass and bronze furnaces are generally disposed of by bagging or barreling and ultimately placed in landfills or open piles. Annual solid waste tonnages for the entire industry are only about 9100 Mg (10,000 tons),[2] corresponding to an average of 43 kg/Mg product (86 lb/ton). The reverberatory furnace will generate about 35 kg/Mg product (70 lb/ton) of solid wastes from air pollution control, corresponding to 80 percent of the total solid wastes generated. Solid wastes by the control of emission from other furnaces can be estimated by the emission factor in Table 4-28.

4.4.3 References for Section 4.4

1. U.S. Department of Interior, Bureau of Mines. Washington, D.C., 1975.

2. Background Information for Proposed New Source Performance Standards. U.S. Environmental Protection Agency. Research Triangle Park, North Carolina. APTD-1352. June 1973. p. 128.

3. Hardinson, L.C. Study of Technical and Cost Information for Gas Cleaning Equipment in the Lime and Secondary Non-Ferrous Metallurgical Industries. National Technical Information Service. Stamford, Connecticut. PB-198-137. December 1970.

4. Nance, J.T. and K.D. Luedtke, Lead Refining In: Air Pollution Engineering Manual, U.S. DHEW, NCAPC. PHS Publication No. 999-AP-40. Cincinnati, Ohio 1967. p. 302.

5. Crane, G.B. Control Techniques of Lead Emissions. Draft. U.S. Environmental Protection Agency. Research Triangle Park. North Carolina. February 1971. p. 4-32.

6. Exhaust Gases From Combustion and Industrial Processes. Engineering Science, Inc. Washington D.C. Contract No. PB-204-861. U.S. Environmental Protection Agency. October 1971. p. VI-60.

7. EPA Test No. 71-C1-27 at American Smelting and Refining Co. Engineering Science, Inc. for U.S. Environmental Protection Agency. Research Triangle Park, North Carolina. February 1972.

8. EPA Test No. 71-C1-30 at West Coast Smelting and Refining Company. Engineering Science, Inc. for U.S. Environmental Protection Agency. Research Triangle Park, North Carolina. March 1972.

9. EPA Test No. 71-C1-76 at R.L. Lavin and Sons, Inc. Engineering Science, Inc. for U.S. Environmental Protection Agency. Research Triangle Park, North Carolina. March 1972.

10. EPA Test No. 74-SLD-1. Preliminary Report. Emission Testing Branch. Environmental Protection Agency. Research Triangle Park, North Carolina. Contract No. 68-02-0225, Task No. 22, July 1974.

11. Tests No. 72-C1-7,8,29, and 33. Emission Testing Branch. Environmental Protection Agency, Research Triangle Park, North Carolina. Contract No. 68-02-0230. August 1972.

12. McIlvaine Scrubber Manual. McIlvaine Co. North Brook, Illinois, 1974. Sec. 3340. p. 118.

13. Control Program Guideline for Industrial Process Fugitive Particulate Emissions. Preliminary Draft. PEDCo-Environmental Specialists, Inc. Cincinnati, Ohio. EPA Contract No. 68-02-1375. Task No. 33. December 10, 1976.

14. Compilation of Air Pollutant Emission Factors. Second Edition. U. S. Environmental Protection Agency, Office of Air and Water Management, Office of Air Quality Planning and Standards. Publication No. AP-42. Research Triangle Park, North Carolina. February 1976.

15. Multimedia Environmental Assessment of the Secondary Nonferrous Metal Industry, Volume II: Industry Profile. Radian Corporation. Contract No. 68-02-1319, Task No. 49. Austin, Texas. June 21, 1976.

16. Fejer, M.E. and D.H. Larson. Study of Industrial Uses of Energy Relative to Environmental Effects. Institute of Gas Technology. Chicago, Illinois. EPA Contract No. 68-02-0643. July 1974.

17. Air Pollution Aspects of Brass and Bronze Smelting and Refining Industry. U. S. Department of Health, Education, and Welfare. National Air Pollution Control Administration, Raleigh, N. C. Publication No. AP-58. November 1969.

18. Brass and Bronze Ingots (Copper Alloys). In: Compilation of Air Pollutant Emission Factors. U. S. Environmental Protection AGency. Publication No. AP-42. Washington, D. C. April 1973.

19. Danielson, T. A. (ed.) Secondary Brass and Bronze Melting Processes. In: Air Pollution Engineering Manual. Environmental Protection Agency. Research Triangle Park, N. C. May 1973.

20. Hardinson, L. C. and Herrington, H. R. Industrial Gas Cleaning Institute, Inc. Study of Technical and Cost Information for Gas Cleaning Equipment in the Lime and Secondary Nonferrous Metallurgical Industries. The National Air Pollution Control Administration. Contract No. CPA 70-150. Durham, N. C. December 1970.

21. Powell, H. E., et al. Recovery of Zinc, Copper, and Lead. Tin Mixtures from Brass Smelter Flue Dusts. United States Department of the Interior. Bureau of Mines. Report of Investigation 7637. Washington, D.C. 1972.

22. Fukubayashi, H. H. et al. Recovery of Zinc and Lead from Brass Smelter Duct. United States Department of the Interior. Bureau of Mines. Report of Investigation 7880. Washington, D. C. 1974.

23. Air Pollution Control in the Secondary Metal Industry. (Presented at NASMI's First Air Pollution Control Workshop, Pittsburgh, Pa. June 1967). Published as a Membership Service by National Assocation of Secondary Materials Industries, Inc. New York, N. Y. 1967.

4.5 FERROUS METALS AND ALLOY PRODUCTION

An estimated 1.77 Gg of lead (1950 tons) was emitted to the atmosphere in 1975 by the production of ferrous metals and alloys. Emissions for each source were as follows: gray iron foundries, 1.08 Gg (1192 tons); iron and steel plants, 605 Mg (667 tons); and ferroalloy production facilities, 82 Mg (91 tons), not including fugitive emissions.

4.5.1 Gray Iron Foundry

Gray iron is produced in cupola, electric and reverberatory furnaces. The estimated throughputs of raw materials in 1975 are 12.4 Tg (1.37×10^7 tons) for the cupola, 4.26 Tg (4.7×10^6 tons) for electric furnaces, and 1.09 Tg (1.2×10^6 tons) for the reverberatory furnace.[1] Approximately 85 percent of the charge is metal,[2] and therefore a total of 15.1 Tg of gray iron (1.67×10^7 tons) was produced. Lead emissions from the gray iron industry in 1975 are estimated at 1.08 Gg (1192 tons).

4.5.1.1 Processes - Figure 4-32 is a flow diagram of a typical foundry operation. Descriptions of the iron melting furnaces from references 4 and 5 are summarized in the following paragraphs.

A. Cupola: A cupola is a vertical furnace consisting of a cylindrical steel shell protected with a refractory lining or with a water-cooled steel shell. Cupolas range from approximately 0.69 to 3.81 m in diameter (27 to 150 in) and are supported on structural steel legs. Air is

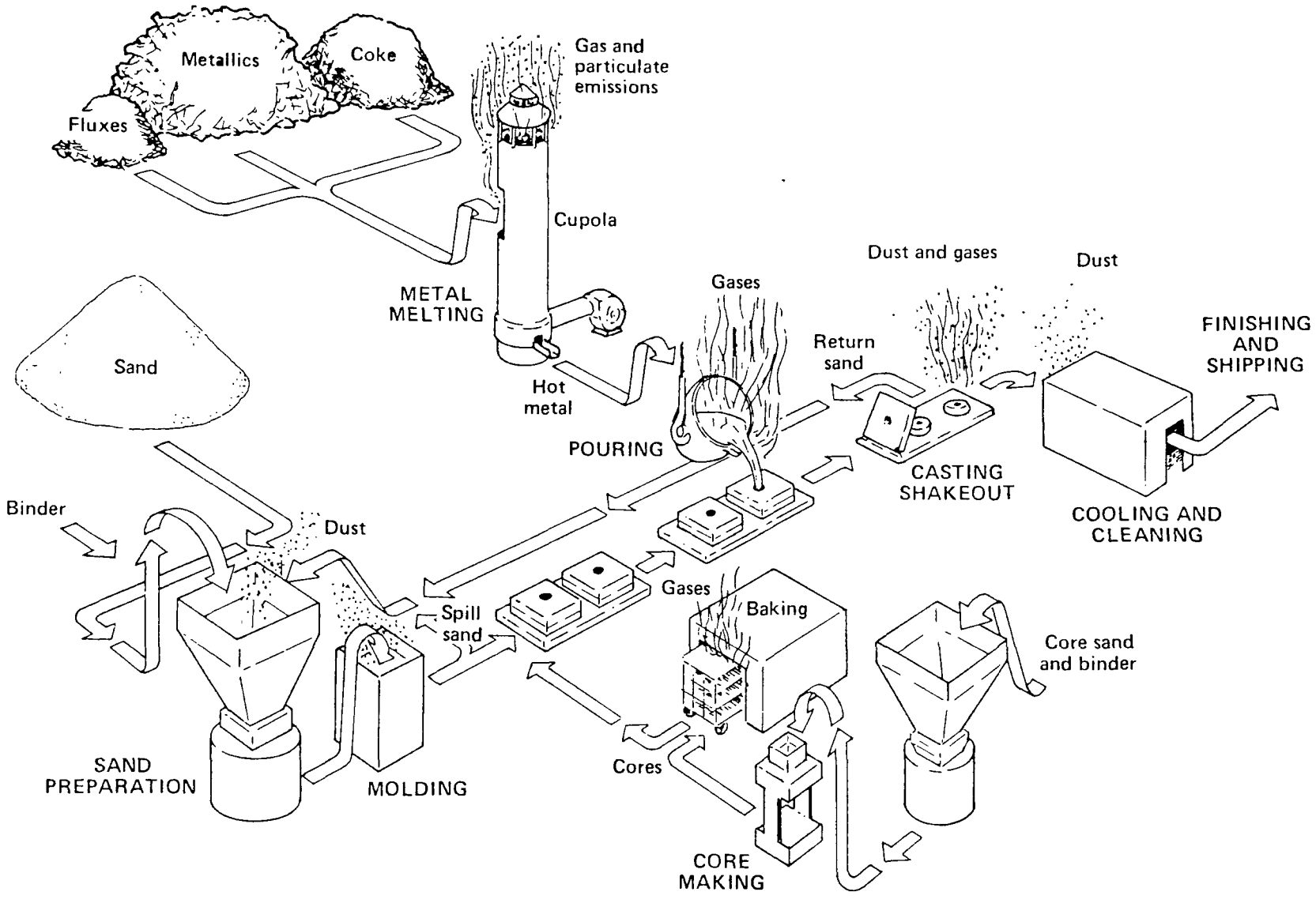

Figure 4-32. Production flow diagram for a typical gray iron foundry.[3] (Courtesy of TRC of New England, Wethersfield, CT)

supplied through a windbox and tuyeres by positive displacement, centrifugal, or fan-type blowers. As in blast furnaces, air is the largest single constituent of the heat, its weight being dependent on the size of the furnace and the metal to be melted. Some foundries recycle waste heat from the cupola to preheat the combustion air as an economy measure.[4] This practice is known as a hot blast operation. A diagram of a cupola is shown in Figure 4-33.

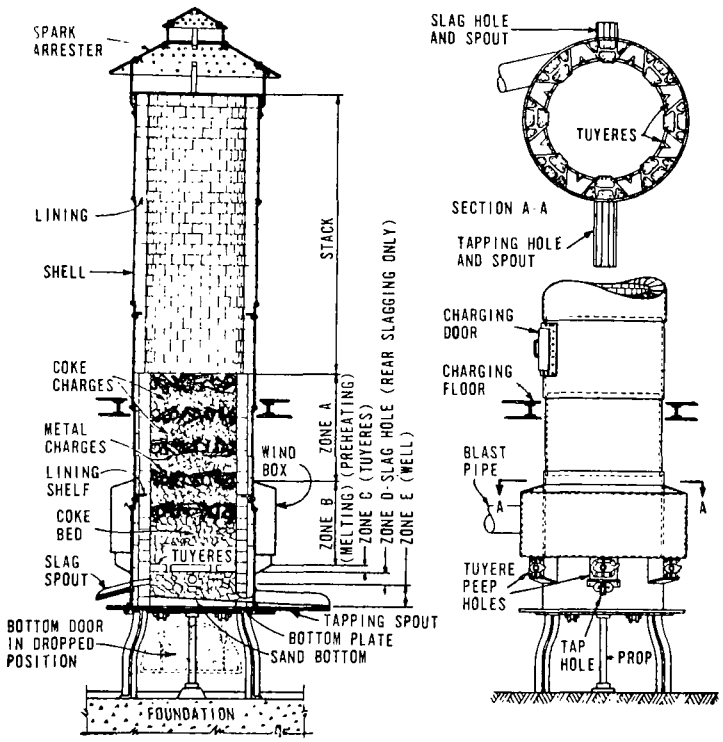

Figure 4-33. Cupola furnace cross-section for gray iron production.[5]

(Courtesy of American Foundrymen's Association)

A cupola is prepared for melting by securing the bottom drop doors, placing a layer of sand over the door to prevent heat damage, closing the tap and slag holes, and charging coke for the bed. The bed is ignited and allowed to burn through. The charges of coke, flux (limestone, fluorspar and soda ash), and metal (pig iron, scrap and steel) are placed in alternate layers up to the charge door which is 4.9 to 6.7 m above the bottom (16 to 22 feet). The blast is then turned on, and melting begins. As the coke bed is consumed and the metal charge is melted, the furnace contents move downward in the cupola and are replaced by additional charge entering the cupola through the charging door. When the metal demand is nearly satisfied, charging ceases and melting continues until all of the metal has been converted to the molten state. The molten metal is tapped out and the furnace bottom is dropped, allowing the excess charge, scrap, and partial burned coke to fall out. Occasionally, pieces of the metallic scrap in the bottoms are recycled while the rest of the drop is discarded with the slag.

Operating factors are broken down into two distinct groups: 1) methods of operations, such as blast rate and temperature, type of lining, operating variables of the afterburner, and 2) the quality of charge materials, including metal to coke ratios, use of oxygen or natural gas, and the use of briquettes.[5]

B. Reverberatory Furnace: A reverberatory furnace operates by radiating heat from the burner flame, roof, and walls onto the material heated. Small reverberatory furnaces are used in preparing gray and white cast iron alloys. The flame and products of combustion come in direct contact with the solid and molten metal. The reverberatory furnace usually consists of a shallow, generally rectangular, refractory hearth for holding the metal charge. The furnace is enclosed by vertical side walls and covered with a low, arched, refractory-lined roof. Reverberatory furnaces are rarely used for melting iron because of low thermal efficiency, low productivity, high refractory costs, and difficult metallurgical control. The curtailment of natural gas and oil supplies has caused further phasing out of these furnaces.

C. Electric Induction Furnace: Channel and coreless types of electric-induction furnaces are used for melting cast iron. In this type of furnace, alternating current is passed through a primary coil with a solid iron core or hollow barcoil. The molten iron contained within a loop that surrounds the primary coil acts as the secondary coil. The alternating current (from 60 to 1000 hz) that flows through the primary coil induces a current in the loop. The electrical resistance of the molten metal creates the heat for melting. The heated metal in the channel type circulates to the main furnace chamber and is replaced by cooler metal. This circulation results in uniform metal temperature and alloy composition.[5]

Use of induction melting has grown during the last decade, principally because of its potential for air pollution control. No fossil fuels are used, no significant metal oxidation takes place during melting, and contamination of the charge is minimal. Preheaters are being equipped with control devices. Generally, charge preheaters without air pollution control will not meet standards, but depends on the fuel and the quality of scrap used. Induction furnaces utilize air pollution controls during charging and melting. Pronounced emissions occur if contaminated scrap is used as charge.

D. Electric-Arc Furnaces: Electric-arc furnaces are commonly used in the secondary melting of iron where special alloys are to be made. Though these furnaces may be either direct or indirect-arc type, the indirect-arc is more commonly used for nonferrous and high alloy melting than for iron melting, but it is only found in a few iron foundries. Pig iron and scrap iron are charged to the furnace and melted, and alloying elements and fluxes are added at specified intervals. These furnaces have the advantage of rapid and accurate heat control.[5]

Since no gases are used in the heating process, some undesirable effects on the metal are eliminated. Arc furnaces in the iron industry are most often used to prepare special alloy irons, and the quality of the material charged is closely controlled. However, foundries also use electric arc melting furnaces to produce common, medium tensile strength iron. The charging of greasy scrap, which would emit combustible air contaminants

would only needlessly complicate the alloying procedure. Afterburners are, therefore, rarely required in conjunction with arc furnace operations. The emissions consist, primarily, of metallurgical fumes and can be controlled by either a baghouse or an electrical precipitator.[5]

E. Other Operations: The molten metal is poured into sand molds designed to produce the desired casting. Molds are made from sand with wood, metal, or plastic patterns, and synthetic or sand cores. When the hot metal is poured into the molds, and when the metal solidifies, the sand and extraneous material are removed in the shakeout operation.[5]

The castings are abrasively cleaned by shot blast, and ground. These processes represent minor sources of particulate emissions, which are frequently controlled.[5] The lead emissions, however, appear to be negligible relative to the melting operations.

4.5.1.2 Emissions - Lead is a naturally occuring trace element in the ferrous materials charged to gray iron furnaces. Higher lead concentrations, and subsequently higher lead emissions, are expected from processing of scrap metals because of contamination with paint, waste oil, and other lead-bearing compounds.

One of the most important characteristics of cupola effluent is its high temperature. Particulate matter is primarily iron oxides, coke particles, and other metal oxides. In addition to lead-containing particulates, efflu-

ent from cupolas primarily contain carbon oxides, nitrogen, oxygen and varying amounts of sulfur dioxide. Smoke, oil vapor, and fumes make up the remainder of the cupola emissions. The high-velocity air stream forced through the charge picks up combustion-related contaminants and dust.[4]

The electric furnaces generate considerably smaller amounts of air contaminants than do the cupola or reververatory furnace; the amount depends mainly on the condition of the metal charged. Processing of contaminated scrap or the addition of magnesium for manufacturing ductile iron would, however, necessitate air pollution controls. In those cases design requirements for a baghouse control system with canopy-type hooding are the same as later described in this chapter. Table 4-32 presents characteristics of exhaust gases from the three furnace processes.

Although no extensive study has been performed on lead emissions from gray iron furnaces, several tests on cupolas indicate that emissions of lead and particulate vary considerably, depending on the quality of the scrap charged, cupola blast velocity, temperature of the melt zone, and lead content. One study reported a range of 0.5 to 2.0

Table 4-32. CHARACTERISTICS OF TYPICAL EXHAUST GAS FROM GRAY IRON MELTING FURNACES

	Cupola		Reverberatory		Electric	
Volume,[a] m^3/s (acfm)	0.58	(1200)	0.85	(1800)	0.14	(300)
Temperature, °C (°F)	982	(1800)	1565	(2850)	1232	(2500)
Grain loading, g/m^3 (gr/scf)[5]	2.3-4.6	(1-2)	0.07	(0.03)	N.A.[b]	
Emissions, g/kg product (lb/ton)						
° particulate[2]	10	(20)	1.2	(2.4)	0.9	(1.8)
° lead[c]	0.05-0.6	(0.1-1.1)	0.006-0.07	(0.012-0.14)	0.005-0.05	(0.009-0.1)
Particle size[5]	0.5-5µm 4-10%w 5-10µm 2-15%w 10-25µm 4-15%w 25-50µm 5-15%w >50µm 45-85%w		N.A.		N.A.	

[a] Per Mg (ton) of gray iron produced per hour (capacity).

[b] N.A. - Not available.

[c] Depends on scrap and lead content of the charge.

weight percent of lead in cupola particulate emissions, with an average of 1.2 percent.[8] Another study reported a concentration of 2.6 to 3.4 weight percent lead in the emissions.[9] One investigator indicated a lead content of 1.2 to 5.7 percent, with an average of 4.3 percent.[10] Tests on a Los Angeles cupola operation showed that 17 percent of the particulate emissions was lead,[5] probably attributable to a high percentage of scrap metal in the charge.

Apparently, lead content of dust emissions vary from 0.5 to 5.5 percent or higher. The average lead content of emissions from all foundry melting furnaces is taken as 3.0 percent. Emissions could contain higher concentrations in recent years because of the increase in scrap recycling and processing.

Table 4-33 presents particulate and lead emission factors developed for the three furnaces, total annual emissions based on the annual production rates, and estimates of the degree of control for each process. A total of 1.079 Gg of lead (1192 tons) was emitted by gray iron foundry operations in 1975.

4.5.1.3 Fugitive Emissions[11]

Figure 4-34 shows a process flow diagram for a gray iron foundry operation with the potential fugitive particulate emissions encircled and numbered. Some of the potential uncontrolled fugitive emission sources are the charging and tapping of the furnaces, the various types of furnaces, and the molding, pouring, and grinding of the iron castings.

Table 4-33. LEAD EMISSION FACTORS AND ANNUAL LEAD EMISSIONS FOR THE GRAY IRON FOUNDRY INDUSTRY

Furnace	Emission factors				1975 throughput[1]		Lead emissions[c]	
	Particulate[a]		Lead[b]					
	g/kg	lb/ton	g/kg	lb/ton	Tg	10^6 tons	Mg	tons
Cupola	8.5	17	0.3	0.6	12.4	13.7	950	1050
Reverberatory	1.0	2.0	0.035	0.07	1.09	1.20	33	36
Electric	0.75	1.5	0.026	0.05	4.26	4.70	96	106
					Total emissions		1079	1192

[a] Based on throughput rate.[2]

[b] Based on production rate (85 percent product yield)[2] and 3 percent lead in particulate.

[c] Based on 70 percent lead control on cupolas and no control on reverberatory and electric furnaces.[10] Calculated from particulate emission factors and 3 percent lead content.

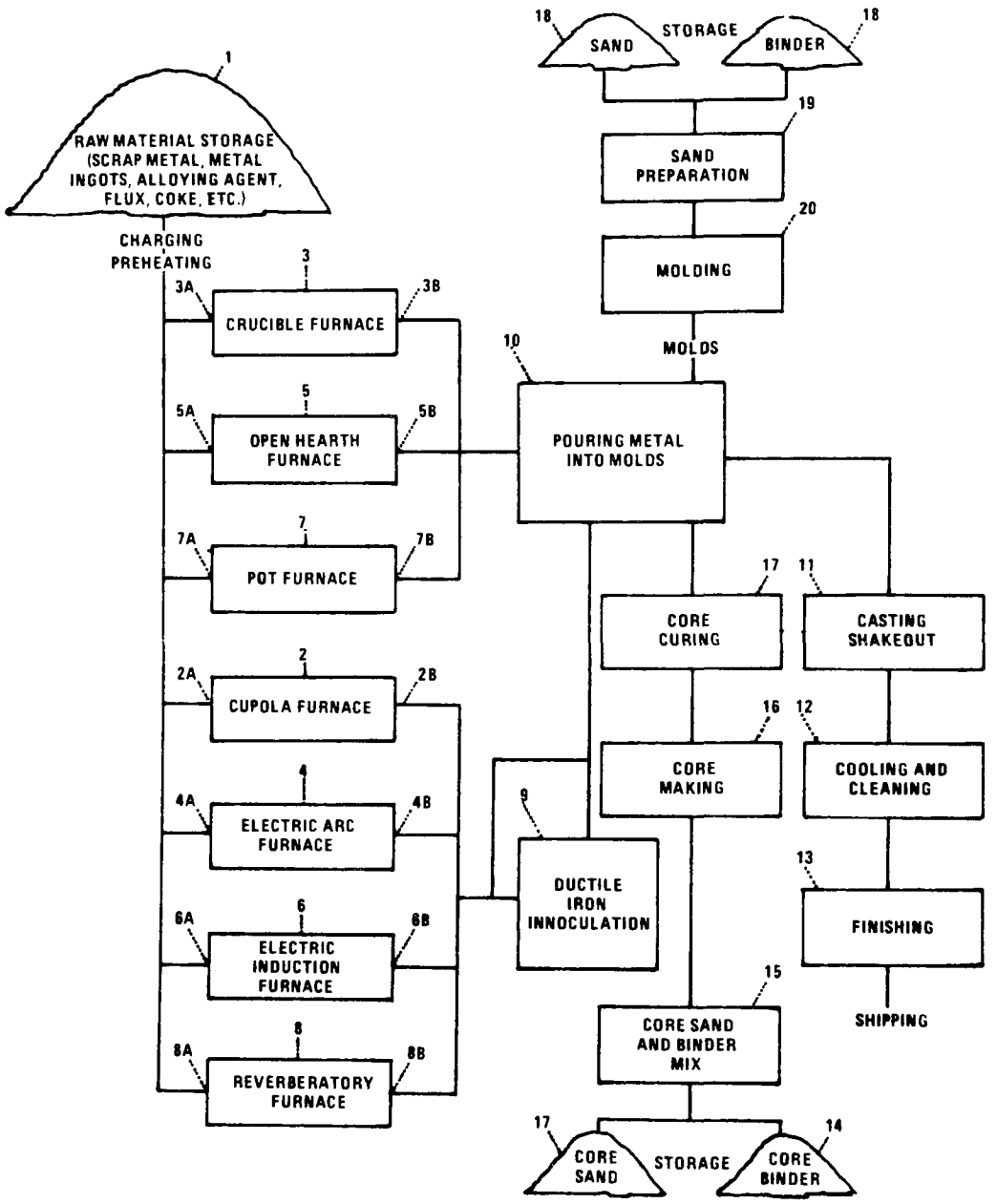

Figure 4-34. Process flow diagram for foundries showing potential industrial process fugitive particulate emission points.

The largest potential sources of fugitive emissions in foundry operations include the various types of furnaces, especially the cupola.

The composition and particle size of dusts from various foundry operations will vary considerably. Much of the information on characteristics is for the stack emissions, and Table 4-34 summarizes the information assuming fugitive emissions are similar in characteristics. Significant lead fugitive emissions are found in the cupola furnace dust. Fumes from all the types of furnaces are extremely fine, and data indicate that 90 to 95 percent of the emissions are below 0.5 μm in size.

Typical control technology for fugitive emissions consists of capture by hoods or enclosing the building and venting the emissions to a fabric filter.

4.5.1.4 Control Techniques - Fabric filters and wet scrubbers are widely used on cupola operations; a few ESP's are used also. Table 4-35 indicates performance of various control systems on cupola operations.

A. Gas Removal: Gas is removed from cupola operations chiefly by two methods. (1) Gases can be removed above the charge door; in this process, however, large amounts of air that are drawn into the charge door must pass through the gas cleaning equipment, resulting in increased size requirement and higher costs; and (2) For larger cupolas, gases are commonly withdrawn through off-takes well below the charging

Table 4-34. EMISSION CHARACTERISTICS FOR VARIOUS FOUNDRY OPERATIONS[6]

Foundry operation	Type	Particle size (μm)
Raw material storage and charge makeup	Coke dust	Fine to coarse
	Limestone and sand dust	30 to 1,000
Melting		
Cupola furnace	Fly ash	8 to 20
	Coke breeze	Fine to coarse
	Metallic oxides	up to 0.7
Electric furnace	Metallic oxides	up to 0.7
Reverberatory furnace	Metallic oxides	up to 0.7
	Fly ash	8 to 20
Inoculation	Metal oxides	up to 0.7
Molding	Sand	Coarse
Pouring	Metallic oxides	Fine to medium
Shakeout	Sand fines, dust	50% - 2 to 15
Cleaning	Dust	50% - 2 to 15
Grinding	Metal dust	above 7
	Sand fines	Fine to medium
	Abrasives	50% - 2 to 7
Sand storage	Fines	50% - 2 to 15
Sand handling	Fines	50% - 2 to 15
Screening, mixing	Fines	50% - 2 to 15
Sand drying and reclamation	Dust	50% - 2 to 15
Core sand storage	Sand fines	Fine
Core making	Sand fines, dust	Fine to medium

Table 4-35. DUST AND FUME EMISSIONS FROM GRAY IRON CUPOLAS[5]

Test No.	1	2	3	4	5	6	7
Cupola data							
Inside diameter, in.	60	37	63	56	42	60	48
Tuyere air, scfm	-	1,950	7,500	-	-	-	-
Iron-coke ratio	7/1	6.66/1	10.1/1	6.5/1	9.2/1	9.6/1	7.4/1
Process wt, lb/hr	8,200	8,380	39,100	24,650	14,000	36,900	16,800
Stack gas data							
Volume, scfm	8,300	5,520	30,500	17,700	20,300	21,000	8,430
Temperature, °F	1,085	1,400	213	210	430	222	482
CO_2, %	-	12.3	2.8	4.7	5.2	-	-
O_2, %	-	-	-	12.7	11.8	-	-
CO, %	-	-	-	0	0.1	-	-
N_2, %	-	-	-	67.5	67.3	-	-
Dust and fume data							
Type of control equipment	None	None	None	Baghouse	Elec precip afterburner	Baghouse	Elec Precip
Concentration, gr/scf							
Inlet	-	-	-	1.33	2.973	0.392	1.522
Outlet	0.913	1.32	0.413	0.051	0.0359	0.0456	0.186
Dust emission, lb/hr							
Inlet	-	-	-	197	184.7	70.6	110
Outlet	65	62.4	108	7.7	6.24	8.2	13.2
Control efficiency, %	-	-	-	96	96.6	88.4	87.7
Particle size, wt %							
0 to 5 μ	18.1	17.2	23.6	25.8	-	-	-
5 to 10 μ	6.8	8.5	4.5	6.3	-	-	-
10 to 20 μ	12.8	10.1	4.8	2.2	-	-	-
20 to 44 μ	32.9	17.3	9.5	10.0[a]	-	-	-
> 44 μ	29.3	46.9	57.9	55.7[b]	-	-	-
Specific gravity	3.34	2.78					

[a] From 20 to 50 μ.
[b] Greater than 50 μ.

door. This process reduces infiltration air to less than 10 percent of the blast volume, but requires precision controls to prevent explosion.[14] Figure 4-35 illustrates these two methods.

B. Gas Cooling: It is common to pass the hot gases in a refractory-lined duct through a spray chamber located near the cupola. In the spray chamber, the gases are quenched to a temperature compatible with the control system in use. Cooling by radiation, conduction, and convection may also be accomplished with U-tube coolers.[14]

C. Fabric Filters: Silicon-coated fiberglass fabric filters are used on many cupolas, primarily because of their high temperature resistance. Fabric filters are also common on electric and reverberatory furnaces when emission control is required and provided. Figure 4-36 shows a modern baghouse installation on a cupola. Use of fabrics with low temperature resistance has been successful because condensation of sulfuric acid mist presents a serious corrosion problem. Gas temperatures ranging from 650 to 1040°C (1200 to 1900°F) can be expected when secondary combustion takes place within the stack, and from 150 to 540°C (300 to 1000°F) when no combustion takes place. Because fluorspar is sometimes used as an additive, the fluoride liberated can also cause corrosion. In these cases, Nomex bags are used and temperatures can be reduced to 204°C (400°F).[14]

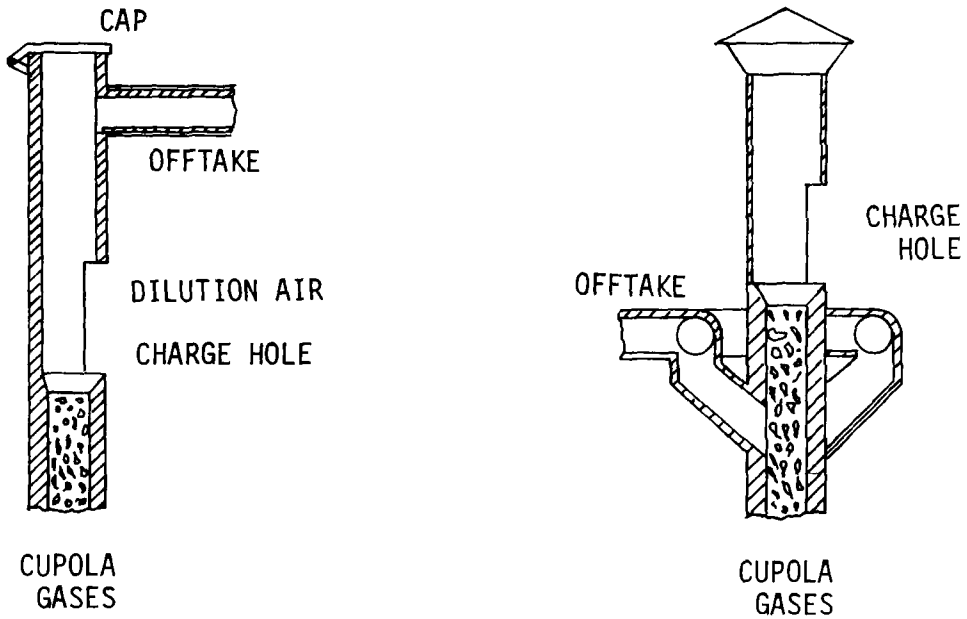

Figure 4-35. Method of capturing exhaust gases from cupola operations: left, above charge door off-take; right, below charge door off-take.[14]

(Courtesy of the McIlvaine Company, Northbrook, IL)

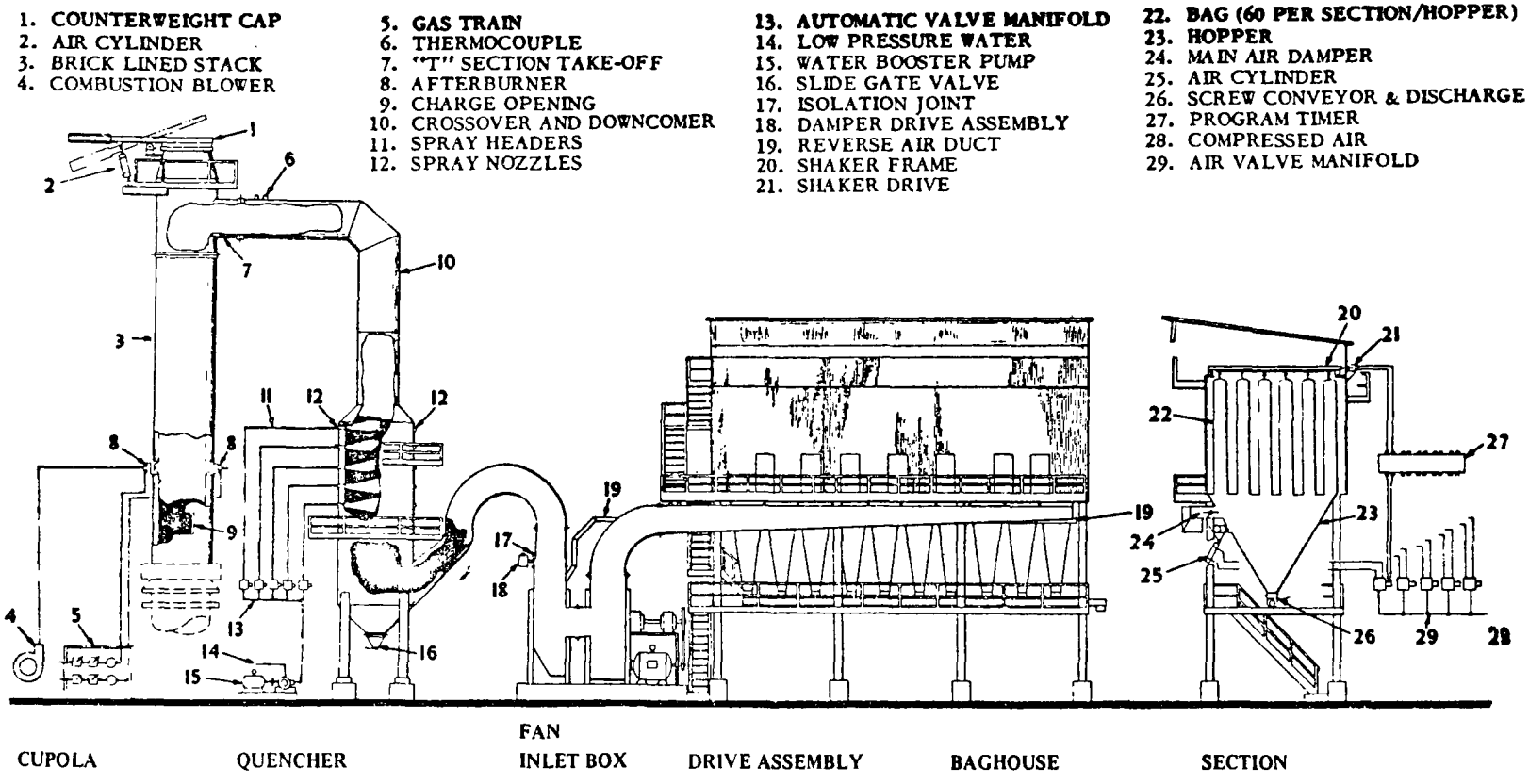

Figure 4-36. Fabric filter control system on a gray iron cupola.[14]

(Courtesy of The McIlvaine Company, Northbrook, IL)

Table 4-36 indicates fabric filter performance on electric arc furnaces. The facility tested consisted of three furnaces and produced about 14.1 Mg/h (15.5 tph) of gray iron per heat. (A "heat" encompasses the time from the beginning of the charging to the end of the tapping of the molten material). These are ducted to a suction baghouse with a filtering velocity of 5.0 cm/s (2.54 fpm). Filter media is Dacron and withstands temperatures of up to 135°C (275°F). According to EPA tests on well-controlled electric arc furnaces, the emissions from properly designed and operated fabric filters generally range from 0.075 to 0.17 kg/Mg gray iron (0.15 to 0.35 lb/ton) or 13 to 24 mg/m^{3} (0.0058 to 0.0106 gr/scf).

Table 4-36. FABRIC FILTER PERFORMANCE TEST RESULTS ON A GRAY IRON ELECTRIC ARC FURNACE[a]

	Inlet	Outlet
Furnace capacity, Mg	7.05	7.05
tons	15.5	15.5
Flow rate, m^3/s	42.8	46.9
acfm	90,710	99,350
Temperature, °C	86	83
°F	187	182
Moisture, % v	2.4	2.3
Emissions		
g/m^3 (gr/dscf)	0.76 (0.33)	0.013 (0.0058)
kg/hr (lb/hr)	88.6 (195)	1.84 (4.05)
kg/Mg (lb/ton)	3.2 (6.3)	0.073 (0.146)

[a] Obtained from U.S. EPA, Emission Test Branch, Research Triangle Park, N.C. For Background Information for New Source Performance Standards for Gray Iron Electric Arc Furnaces.

D. Electrostatic Precipitators:[15] Application of ESP's on cupola operations in the United States has been limited. The major operational problems are associated with variability of emissions and flow rates, small particle sizes, high particle resistivity, and explosion potential during upset conditions due to a high CO content.

Complete combustion of CO to CO_2 is required prior to gas cleaning by an ESP to prevent fire or explosion. After combustion, the gases are generally cooled to 150 to 204°C (300 to 400°F) by evaporative methods to reduce electrical resistivity.

A typical ESP installation for a cupola with 9.07 Mg per hour melt rate (10 tph) exhausting 8.0 to 9.5 m^3/s (17,000 to 20,000 acfm) required 1670 m^3 of plate area (18,000 ft^2) to maintain a collection efficiency of 90 to 97 percent. Stainless steel construction was used to minimize corrosion. Drift velocities were 9 to 18 cm/s (0.3 to 0.6 fps).[15]

European ESP installations on hot blast cupolas have rarely achieved over 99 percent efficiency with outlet grain loadings ranging from 0.05 to 0.16 g/m^3 (0.02 to 0.07 gr/dscf).[15]

E. Wet Collectors: Various types of wet collectors are widely used for control of cupola emissions. These include the conventional and double wet-cap, low-energy (ΔP = 1.5 kPa or 6 in. H_2O) scrubbers, and high-energy (ΔP = 7.5-17.4 kPa or 30-70 in. H_2O) scrubbers. The most recent installations of wet collectors have been of the high-energy type (venturi or packed-bed), which are adequate to meet state regulations.[16]

Several factors determine the pressure drop requirements of the scrubbers: 1. Temperature of the melt zone. Higher temperatures volatilize and oxidize metallic components, yielding submicron particles. 2. Scrap quality. High scrap content increases grain loading. 3. Lining. Unlined cupolas generate particles of larger size. 4. Oxygen enrichment. Higher emission concentrations result, since the oxygen used for combustion does not carry with it the inert volume of nitrogen. 5. Air preheating. Hot blast tends to increase pressure drop requirements.[16] Figure 4-37 shows emissions versus orifice pressure drop.

The combination of high temperature with corrosive gases and dusts creates a potential for high maintenance requirements. Stainless steel scrubber construction has been satisfactory; carbon steel may be used where pH control is provided. Generally, systems are constructed of 316-stainless steel upstream of the scrubber and carbon steel

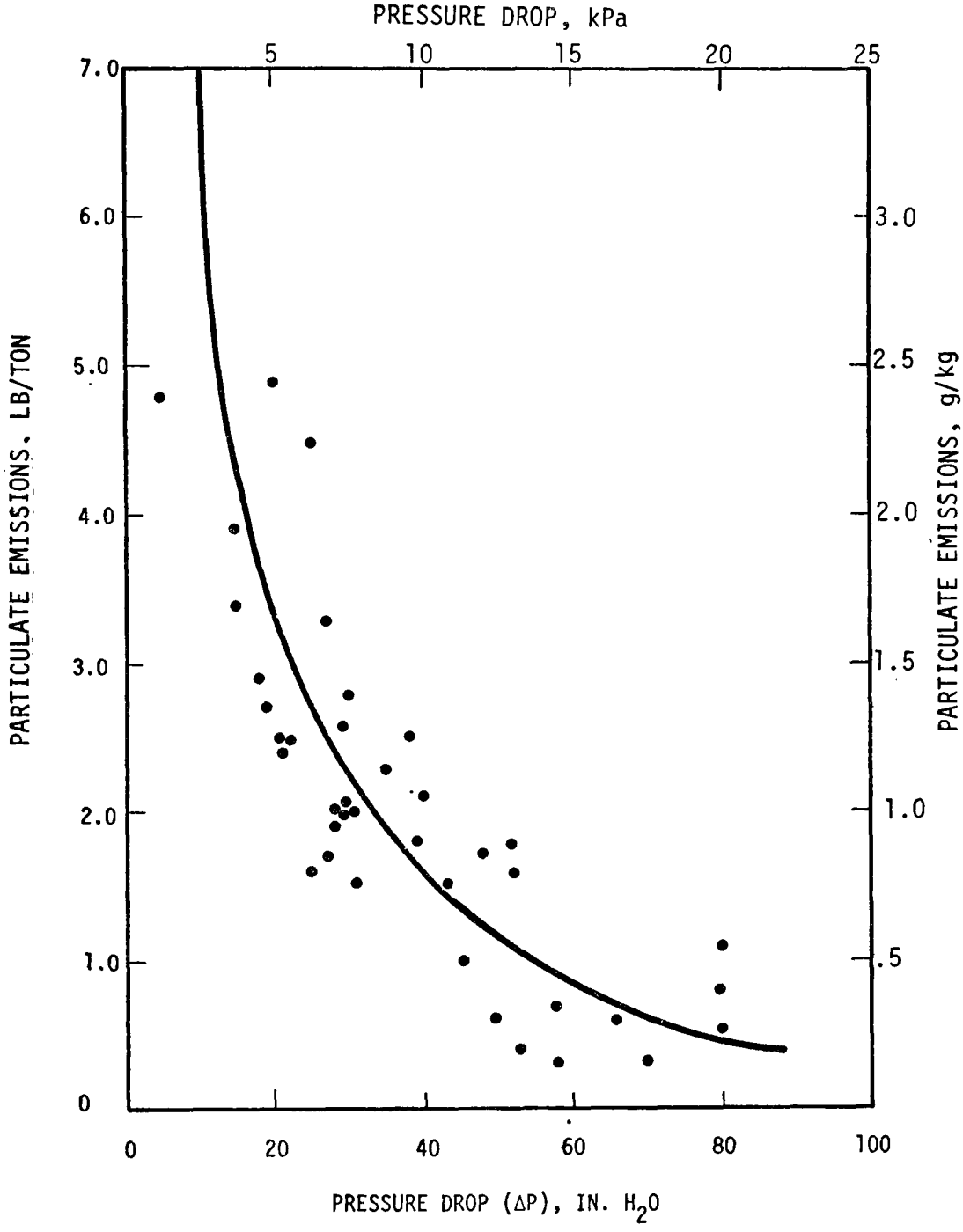

Figure 4-37. Particulate emissions as a function of venturi orifice pressure drop.[16]

(Courtesy of McIlvaine Company, Northbrook, IL)

downstream. Auxiliary equipment, including fans and pumps, is constructed of abrasion-resistant cast iron.[16] Figure 4-38 illustrates a venturi scrubber on a cupola furnace.

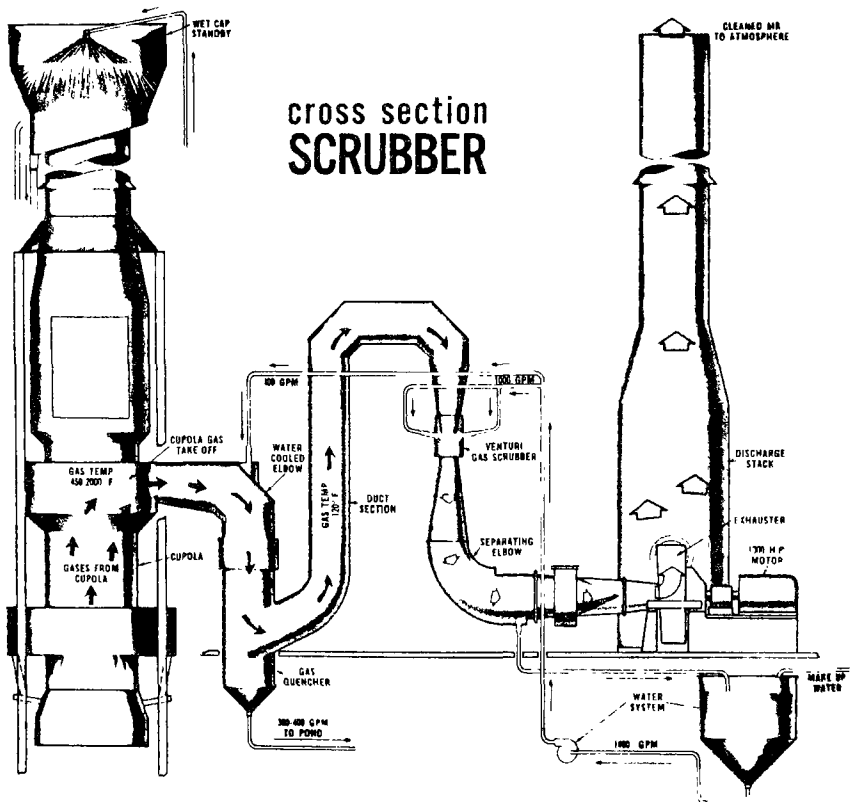

Figure 4-38. Venturi gas scrubbing system installed on a foundry cupola.[16]
(Courtesy of General Motors Corporation, Detroit, Michigan)

4.5.1.5 Control Costs - A gray iron cupola with a production capacity of 13.6 Mg/h (15 tph) is considered the model size to determine control costs. The cupola exhausts 36.4 m^3/s at 980°C (77,000 acfm at 1800°F), and particulate emissions are 140 kg/h (306 lb/hr) with up to six percent lead. The gases enter a quench tower, where they are cooled to 93°C (200°F) before they enter a venturi scrubber and entrainment separator (ΔP = 15 kPa [60 in. W.G.] and 95% efficiency). A fan rated at 17.8 m^3/s (37,800 acfm) at a system pressure drop of 16 kPa (65 in. H_2O) is also provided. This level of control will permit compliance with an average state particulate limitation of 12.7 kg/h (28 lb/hr).

Capital costs are estimated at $1.12 million, including collector, quench tower, separator, fan system, hold tanks, pumps, and ductwork.[a]

Annualized costs are estimated at $565,000, including utilities, labor, maintenance, overhead, fixed costs (with capital recovery), sludge disposal, and water treatment. Annual operation time is assumed at 6000 hours and annual labor required is assumed at 6000 hours.

Capital and annualized costs are expressed below in terms of exhaust volume, annual labor hours and annual production:

---

[a] See Section 2.9 and Appendix B for discussion of cost analyses. Detailed cost studies are available from EPA upon request.

S.I. units

Capital, $ = $1.3 \times 10^5 V^{0.6}$

Annualized, $ = $3250V + 19.6H + 35,200V^{0.6} + 0.31M$

V = m^3/s @ 980°C
H = annual labor hours
M = annual production, Mg/yr

12 < V < 110
range

English units

Capital, $ = $1310\ Q^{0.6}$

Annualized, $ = $1.53Q + 19.6H + 356Q^{0.6} + 0.28P$

Q = acfm @ 1800°F
H = annual labor hours
P = annual production, TPY

26,000 < V < 230,000
range

4.5.1.6 Impacts

A. Emission Reduction

Reduction in particulate emissions from cupola operations by air pollution controls will be about 8.0 g/kg of gray iron (16 lb/ton). The particulate lead content could range from 0.5 to 17 percent by weight depending on operating factors.

B. Energy Consumption

The energy from electricity and natural gas required to produce cupola gray iron is about 0.7 GJ/Mg (0.7 MM Btu/ton) of product.[17] The energy requirements for the model cupola venturi scrubber (see previous section) are 0.14 GJ/Mg (0.14 MM Btu/ton), representing a 20 percent increase.

C. Wastewater Generation

Only cooling water is required for cupola operations. No data was obtained to estimate total plant or cupola water usage rates. The wastewater generated for the model cupola venturi system is calculated at (40 gal/ton) of product. This could be a significant increase in wastewater, however this water can be settled and recycled or discharged.

D. Solid Waste Generation

The solid waste generated by cupola operations is about 1.0 kg/Mg (700 lb/ton) of product some of which may be mainly recycled.[5] The dry solids collected by the venturi system on the model cupola amounts to about 8.0 kg/mg (16 lb/ton) which is also recycled. The increase is roughly 8 percent, however, no impact is expected since it is mainly recycled.

4.5.2 Iron and Steel Industry

Six processes in iron and steel manufacture are emitters of lead: 1) sintering, 2) coking, 3) blast furnaces, 4) open-hearth furnaces, 5) basic oxygen furnaces, and 6) electric arc furnaces. The 1975 production rates for these processes are presented in Table 4-37.

Table 4-37. PRODUCTION FOR IRON AND STEEL INDUSTRY IN 1975[18]

Process	1975 production	
	Tg	10^6 tons
Sintering	27.94	30.83
Coking	43.83	48.32
Blast furnace	72.45	79.92
Basic oxygen	65.12	71.80
Open hearth	20.10	22.16
Electric arc	20.57	22.68

A total of 605 Mg of lead (667 tons) was estimated to be emitted to the atmosphere in 1975 by the iron and steel industry from particulates containing lead components, not including fugitive emissions.

4.5.2.1 Processes - Descriptions and control information given in references 19 and 21 are summarized in the following paragraphs.

A. Raw Material Preparation: The major raw materials required to make pig iron (or "hot metal" as it is called in its molten state) are iron ore, sinter, pellets, coke, limestone, fluxes and air. Some lump iron ore is used for making hot metal, but about 70 percent of the metallics charged to American blast furnaces are agglomerated products such as pellets and sinter.[19] Pellets are made at the mine site by grinding the ore to a very small size (usually less than 325 mesh), adding a binder, and then forming the ore into small balls or pellets, which are subsequently hardened by heating or ignition. After hardening, the pellets are shipped to the steel plants for use directly in the blast furnace.[19] Lead is a trace mineral in the iron ore.

B. Sintering: Sintering was initially developed to recover and convert to a useful form the ore fines, blast-furnace flue dust, mill scale, and other iron-bearing materials that could not be used directly as charge to a blast furnace.[19] These materials are mixed with fine coke and fired on a travelling grate. This firing produces a sinter, or fused mass of material, which is cooled, broken up and charged into the blast furnace. The sinter plant area has many points of dust emissions because of the fine materials handled. Lead is present primarily in the ore fines.

C. Coking: Coke is the major fuel and reducing agent used to make hot metal in blast furnaces. Metallurgical coals

received from the mines are crushed to size and blended with other coals, and then charged into coke ovens for conversion to coke. Conversion is achieved by subjecting the coal to indirect heating in long, thin ovens, for periods of 14.5 to 17 hours. On completion of the coking cycle, the coke is pushed from the ovens into a quench car, which carries it to a quenching tower where the incandescent coke is quenched by water sprays. The coke is then crushed and screened prior to its use in the blast furnace.[19] An average of over 640 kg of coke is required for every Mg of iron (1280 lb/ton) produced in blast furnaces.[21] Lead is a trace mineral in the coal (see section 3.2).

D. Blast Furnace: The prepared materials (coke, iron ore, scrap pellets, sinter, and flux), collectively called the "burden", are placed in separate transient storage bins in the blast-furnace stockhouse. They are withdrawn in weighed fractions into a scale car and charged into the top of the blast furnace via a skip hoist or, in the newest blast furnaces, by continuous conveyor belts.[19] Figure 4-39 illustrates material flow and operations within a blast furnace pig iron plant.

The heat energy required for chemical reactions between the iron ore, pellets, sinter, and flux is supplied by blowing air, preheated to temperatures of 810 to 1090°C

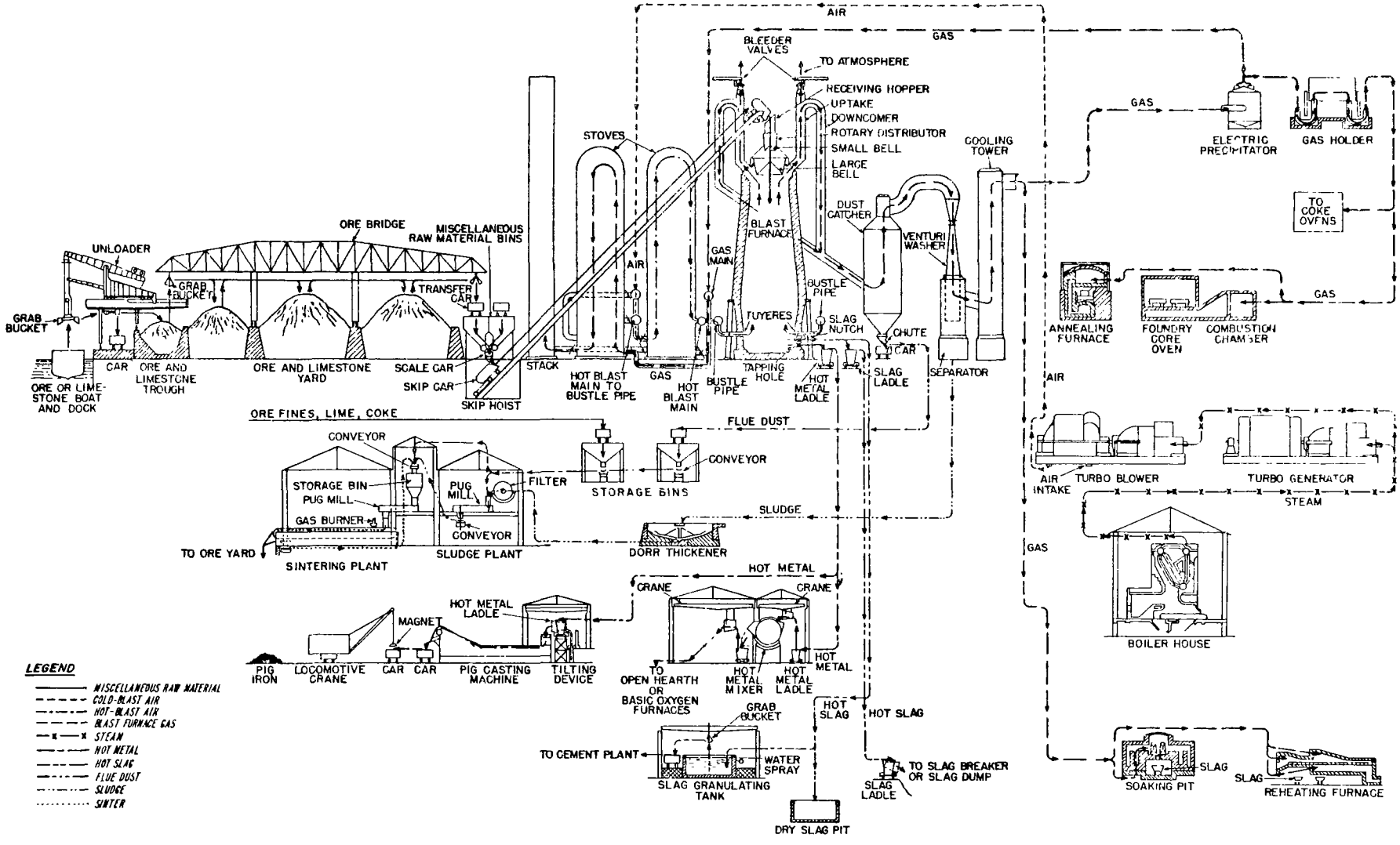

Figure 4-39. Flow diagram depicting the principal units and auxiliaries in modern blast-furnace plant, and showing the steps in the manufacture of pig iron from receipt of raw materials to disposal of pig iron and slag, as well as the methods for utilizing the furnace gases. 21

(Copyright 1971 by U.S. Steel Corporation)

(1400 to 2000°F), into the bottom of the blast furnace via blowpipes known as "tuyeres". The combustion of coke also maintains the pig iron in a molten state and at a temperature such that the iron can be removed from the furnace by "casting". The coke in the combustion zone at the tuyeres does not burn to carbon dioxide. Because of the high temperature, about 1930 to 1980°C (3500 to 3600°F), and the presence of the large amount of carbon in the form of coke, carbon monoxide is formed and passes on up through the solid burden, where it takes part in some of the chemical reactions necessary to produce metallic iron. The excess of carbon monoxide (diluted with carbon dioxide, nitrogen, and moisture) passes off the top of the blast furnace and is collected for use as fuel to heat the air blown into the blast furnace and for other in-plant heating purposes.[19] A blast furnace plant is shown in Figure 4-40.

The hot metal produced in the blast furnace and the liquid slag (which is a fused mixture of the flux and impurities removed from the ore, pellets, sinter, and coke) are removed periodically from the blast furnace. The hot metal is "cast", while the slag is said to be "flushed". Hot metal is cast and transferred to the steelmaking plant. Slag is disposed of at a dump via a ladle, or it may be granulated by air or water cooling to produce an aggregate that is sold.[19]

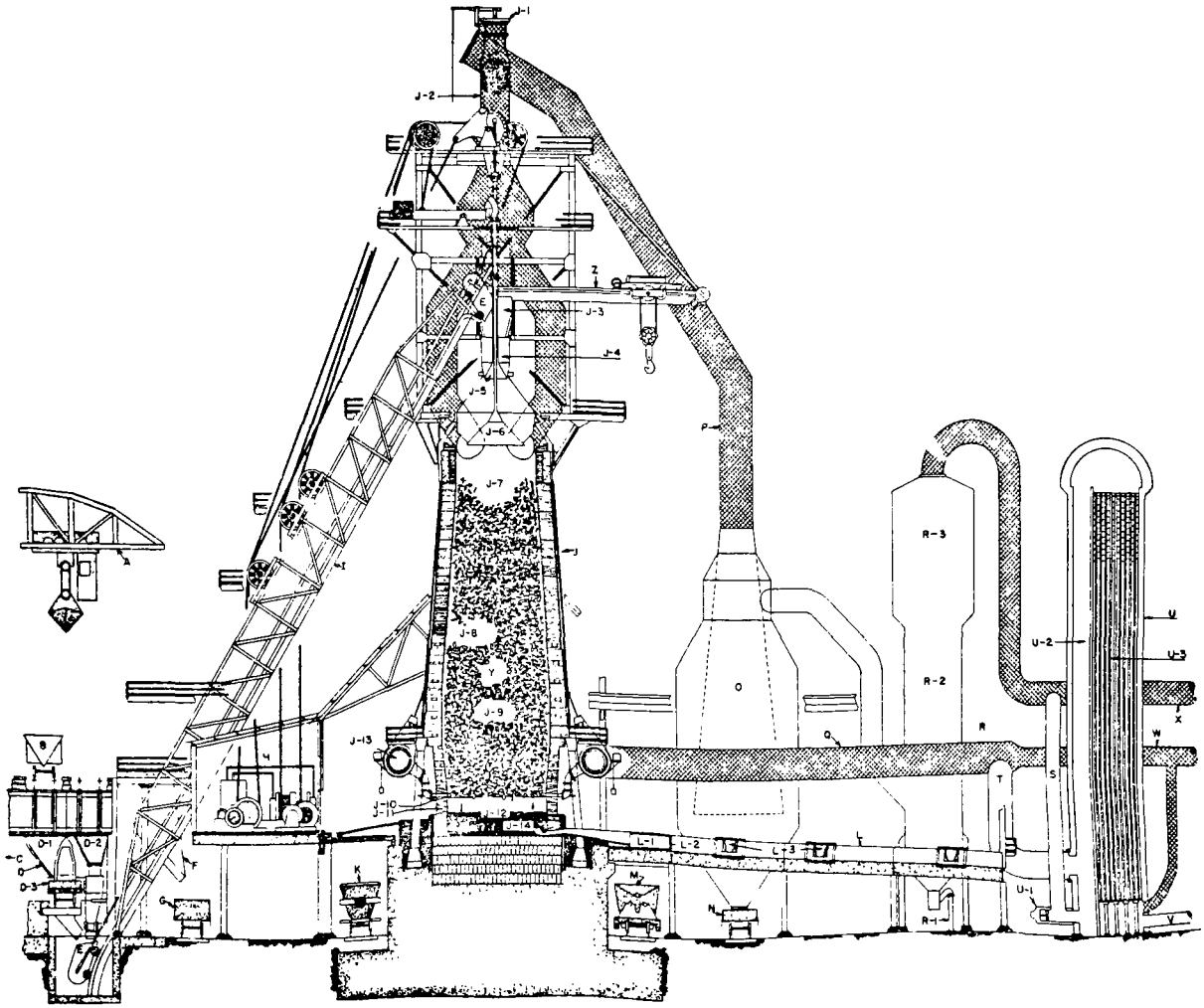

Legend

A. Ore bridge
B. Ore transfer car
C. Ore storage yard
D. Stockhouse
   D-1 Ore and limestone bins
   D-2 Coke bin
   D-3 Scale car
E. Skip
F. Coke dust recovery chute
G. Freight car
H. Skip and bell hoist
I. Skip bridge
J. Blast furnace
   J-1 Bleeder valve
   J-2 Gas uptake
   J-3 Receiving hopper
   J-4 Distributor
   J-5 Small bell
   J-6 Large bell
   J-7 Stock line
   J-8 Stack
   J-9 Bosh
   J-10 Tuyeres
   J-11 Slag notch
   J-12 Hearth
   J-13 Bustle pipe
   J-14 Iron notch
K. Slag ladle
L. Cast house
   L-1 Iron trough
   L-2 Slag skimmer
   L-3 Iron runner
M. Hot-metal ladle
N. Flue dust car
O. Dust catcher
P. Downcomer
Q. Hot blast line to furnace
R. Gas washer
   R-1 Sludge line to thickener
   R-2 Spray washer
   R-3 Electrical precipitator
S. Gas offtake to stove burner
T. Hot blast connection from stove
U. Stove
   U-1 Gas burner
   U-2 Combustion chamber
   U-3 Checker chamber
V. Exhaust gas line to stack
W. Cold blast line from blower
X. Surplus gas line
Y. Stock—Iron ore, coke, limestone
Z. Jib boom crane

Figure 4-40. Idealized cross-section of a typical modern blast-furnace plant. *Details may vary from plant to plant.*[21]

(Copyright 1971 by U.S. Steel Corporation)

Although almost all pig iron in the United States is made in blast furnaces, another process is "direct reduction", a name applied loosely to any method that bypasses the blast furnace. Reduction of the iron ore to metal is conducted entirely in the solid state, although the metallic iron might subsequently be melted. Direct-reduction processes appear in many variations, but all use some form of carbon and/or some form of hydrogen as fuel and reducing agent. Carbon can be supplied as coal, coke, or other hydrocarbons. Carbon monoxide is one of the useful forms of carbon for this purpose. Hydrogen is supplied sometimes from reformed natural gas (when it often appears in a mixture with carbon monoxide) or from coke-oven gas. Regardless of the process, the product usually is a spongy or powdered form of metallic iron (still mixed with gangue from the iron ore), which then is intended for charging directly into electric or blast furnaces.[19]

E. Open Hearth: The open-hearth furnace is a rectangular furnace with a comparatively shallow hearth for containing and processing the steel. An open-hearth furnace is shown in Figures 4-41 and 4-42. Scrap, flux, and hot metal are charged into the furnace via doors located in the front of the furnace. The charge materials are heated with various fuels such as oil, tar, natural gas, and combinations of

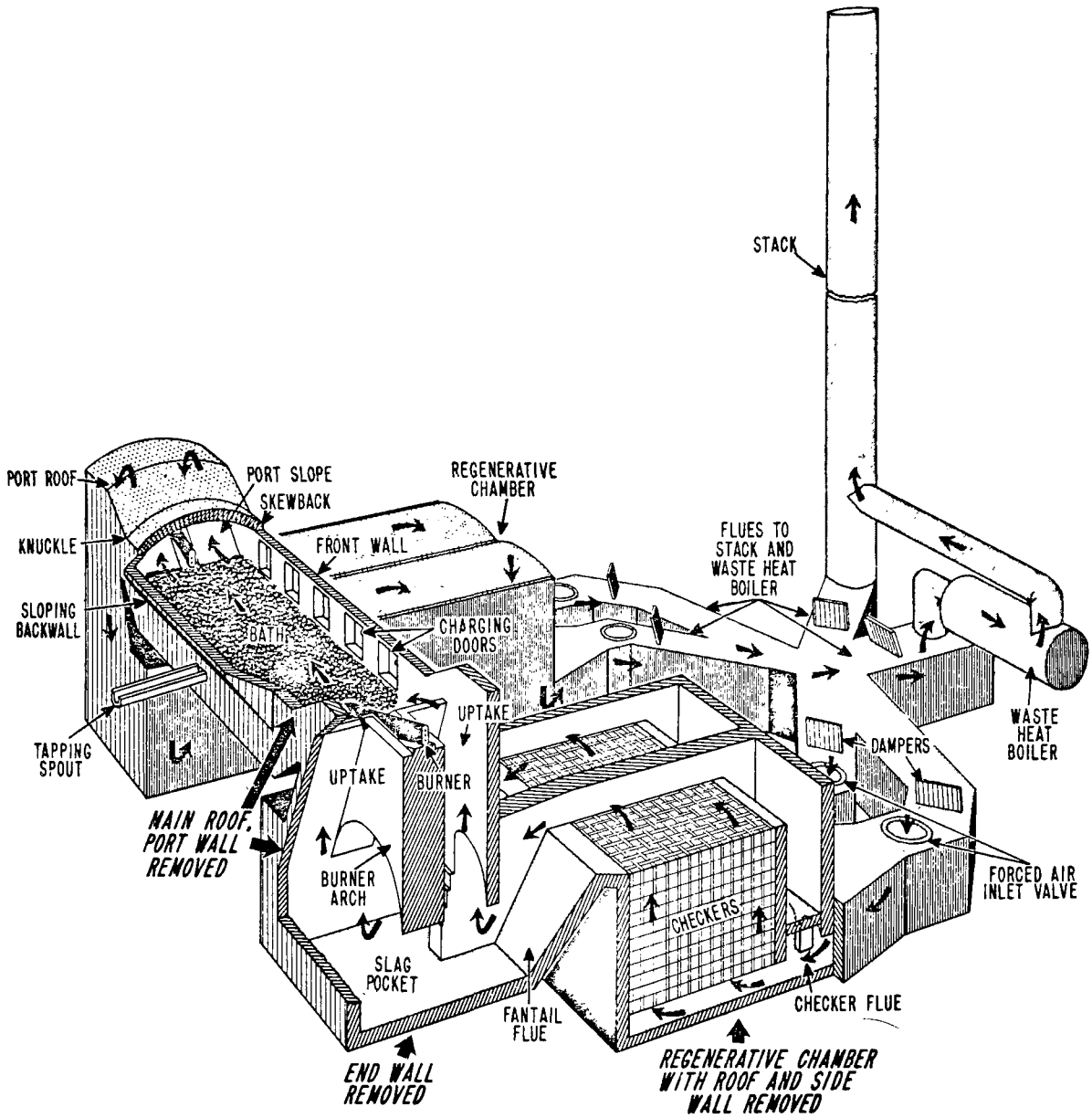

Figure 4-41. This diagram illustrates the principal parts of an open-hearth furnace (with silica roof) sectioned to show as much as possible of the interior. The heavy curved arrows indicate the direction of the flow of preheated air, flame, and waste gases when liquid fuel is fired through a burner in the trench at the right end of the furnace. The five doors shown are in the front wall of the furnace, and the checker chambers extend under the charging floor, which is not shown. When reversal of firing takes place, the function of the uptake is reversed, and it becomes the downtake. 21

(Copyright 1971 by United States Steel Corporation)

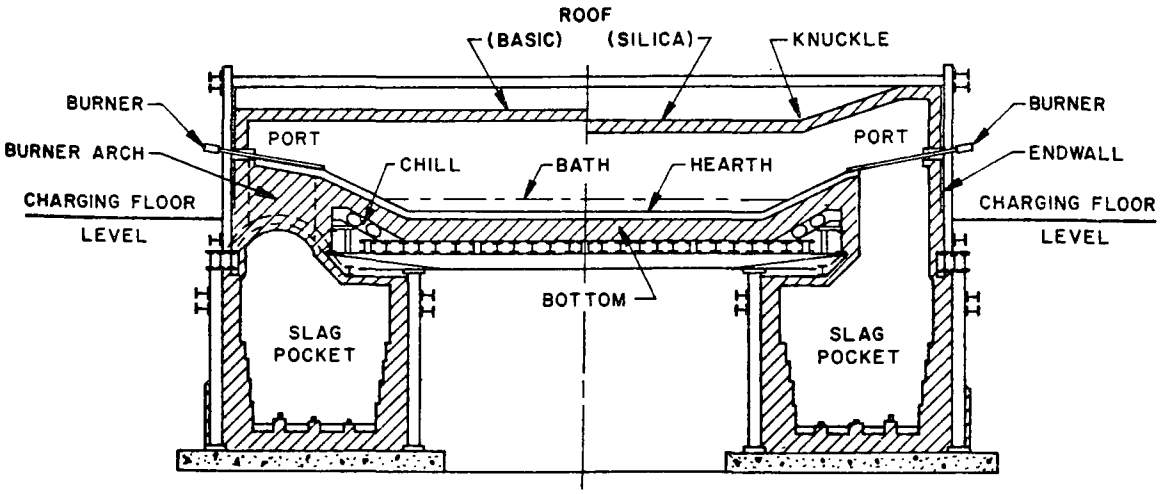

Figure 4-42. Diagrammatic section (not to scale) along the length of a liquid-fuel fired open-hearth furnace, giving nomenclature of major parts. Left half of roof simulates basic construction; right half, silica construction. Burner arch has been omitted from design at right.[21]

(Copyright 1971 by United States Steel Corporation)

these. The older steelmaking technology used iron ore and air to supply the necessary oxygen, while the newer technology makes use of gaseous oxygen introduced into the molten bath through one or more water-cooled lances. Open-hearth steelmaking requires comparatively long time periods, ranging from 8 to 10 hours in operations not using oxygen lancing to 4 to 5 hours in operations using oxygen lancing.

F. Basic Oxygen Furnace: The basic oxygen furnace (BOF) is a pear-shaped vessel that contains the charge materials required to make steel. As in the open-hearth process, the major materials are hot metal and scrap. In the basic oxygen process, no external heat is supplied to reduce the contents of carbon, silicon, and manganese. Gaseous oxygen is blown onto the surface of the molten charge at a very high rate, and the heat generated by the oxidation of the elements is sufficient to carry the process to completion and produce steel. A typical BOF is shown in Figure 4-43.

G. Electric Arc Furnaces: The heat necessary to produce steel in an electric-arc furnace is supplied as electrical energy to the charge material which in the majority of cases is scrap steel. Several steelmaking plants in the United States are known to use hot metal as part of the charge in large electric furnaces. Oxygen (in the form of ore, mill-scale, or gaseous oxygen) to lower the carbon content is

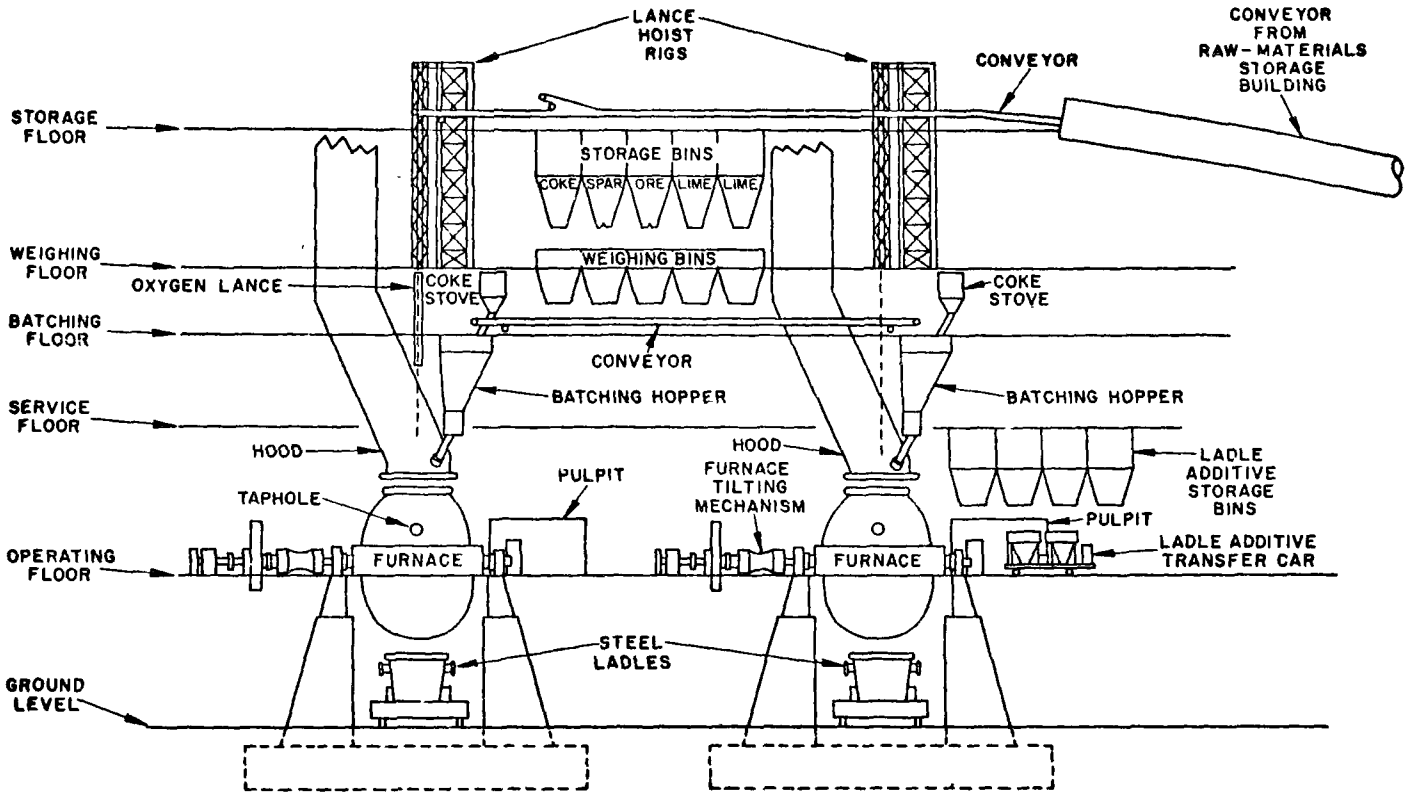

Figure 4-43. Schematic elevation showing the principal operating units of the basic oxygen process steelmaking shop.[21]

(Copyright 1971 by United States Steel Corporation)

used to produce steel. The use of gaseous oxygen is by far the more prevalent method. Most stainless and alloy steels are made in electric furnaces. In recent years, the increase in furnace size, combined with higher powered transformers and a greater availability of scrap, has made electric furnace steelmaking of the plain-carbon, high-tonnage steels competitive in cost with open hearth and BOF steelmaking.[19] A cross-section of an electric arc furnace is shown in Figure 4-44. Lead contained in the scrap in the form of leaded steel, lead coated steel, or lead debris is the main source of lead emissions from this furnace.

In all steelmaking practices, the refined steel is tapped from the furnace into ladles, after which it is transported to an adjacent area of the steel plant where it is teemed into ingots, cast directly into continuous casting machines, or teemed into pressure-casting molds for conversion to semifinished products.[19]

4.5.2.2 Emissions

A. Sintering: Sintering is a source of significant atmospheric emissions. Particulate emissions are estimated to be about 11 g/kg of sinter (22 lb/ton) at the discharge vents[20] and 10 g/kg of sinter (20 lb/ton) at the windbox.[22]

Combustion is maintained at a temperature of about 1300 to 1500°C (2370 to 2730°F).[18] The process emits not only

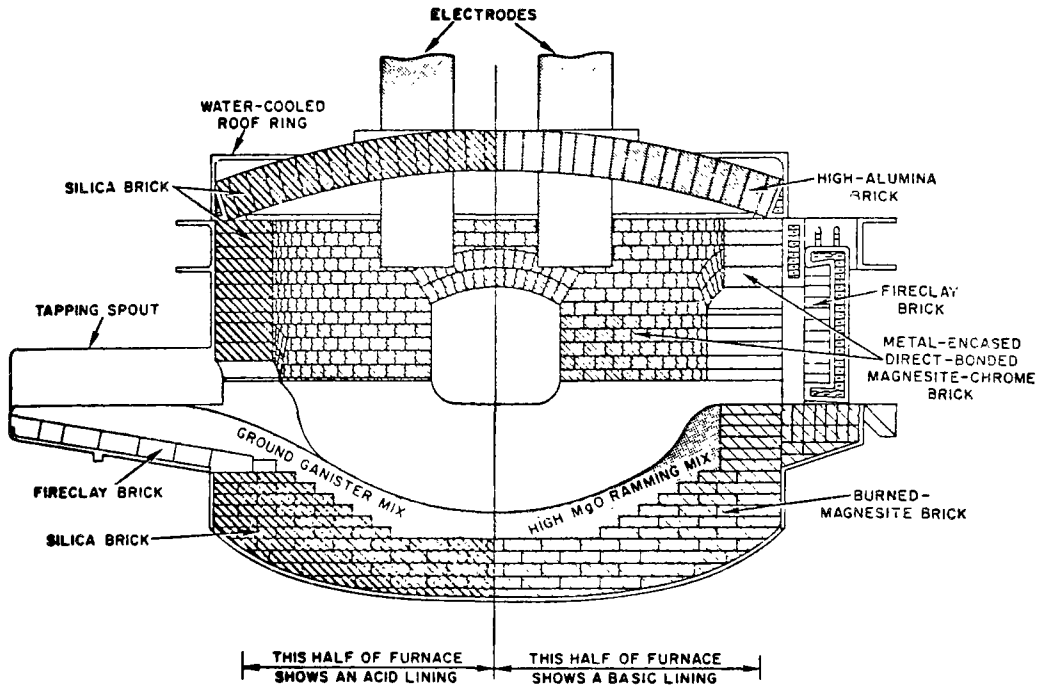

Figure 4-44. Schematic cross-section of a Heroult electric-arc furnace with a dish-bottom shell and stadium-type sub-hearth construction, indicating typical refractories employed in (left) an acid lining and (right) a basic lining. Although only two electrodes are shown in this section, furnaces of this type (which operate on three-phase current) have three electrodes.[21]

(Copyright 1971 United States Steel Corporation)

sulfur oxides (30 to 40 percent of the sulfur in the charge is liberated), but also other volatile constituents. Sulfur content of the gases could be as high as 2000 ppm but is generally less than 200 ppm. Hydrocarbon fumes may be evolved if oily scrap is used in preparation of the sinter mix.[20]

In addition to sinter machines and sinter screens, all conveyor transfer points, loading points, chutes, and bins handling sinter are potential sources of fugitive dust. Many industries control the dust at these points by use of a chemical wetting agent mixed with water. Table summarizes the exhaust gas characteristics associated with the sintering process.

Based on a lead content in the particulate of 320 ppm,[23] the lead emission factor is 6.7 mg Pb/kg of sinter (0.013 lb/ton). Based on a 90 percent level of control and 27.9 Tg of sinter (3.08×10^7 tons) produced in 1975, lead emissions were 18 Mg (20 tons).

B. Coking: Metallurgical coals of low ash content, low sulfur content, and suitable coking properties are used in the coking operation. The analytical properties of the coal have no apparent effects on the quantities of emission during charging. Dust is evolved when the larry car is filled with coal and a predetermined volume of coal is charged to the larry car hoppers. Charging the coal to

Table 4-38. CHARACTERISTICS OF UNCONTROLLED EXHAUST GAS FROM SINTERING MACHINES

Parameters	Standard international units	English units	References
Gas flow rate[a]	0.8-1.0 $m^3/s \cdot Mg \cdot h^{-1}$ sinter	1600-2000 scfm/tph sinter	9
Temperature	200°C	392°F	20
Moisture content	4.5-10% v	4.5-10% v	20
Grain loading	2.2 g/m^3	1.0 gr/scf	
Particle size	98% < 45 μm	98% < 45 μm	20
Lead content of particulate	320 ppm (wt)	320 ppm (wt)	23
SO_2 content	< 200 ppm v	< 200 ppm v	20
Emission factors[b]			
° particulate	21 g/kg sinter	42 lb/ton sinter	20, 22
° lead	6.7 mg/kg sinter	0.013 lb/ton sinter	

[a] Includes windbox and discharge vent gases (90% v) and product cooler gases (10% v).

[b] Includes emissions from windbox and discharge vents.

ovens also results in high dust emissions, accounting for 60 to 70 percent of total emissions from oven batteries.[20]

Emissions from oven charging are as follows: particulate, 0.75 g/kg (1.5 lb/ton); sulfur dioxide, 0.01 g/kg (0.02 lb/ton); carbon monoxide, 0.3 g/kg (0.6 lb/ton); hydrocarbons, 1.25 g/kg (2.5 lb/ton); nitrogen oxides, 0.015 g/kg (0.03 lb/ton); and ammonia 0.01 g/kg (0.02 lb/ton). These values are based on the rate of material throughput.[24]

Maximum temperature attained at the base of the heating flue of the oven may be as high as 1480°C (2700°F).[2] In the oven, coking temperatures are between 1100 to 1150°C (2000 to 2100°F). Limited emissions can occur around door seals and other points of leakage, but with adequate maintenance these emissions can be kept to a minimum.

Coke-pushing emissions vary with the degree of coking. Well-coked coal will smoke very little when pushed into the quench car, whereas poorly coked "green" coke will cause excessive smoke.[20] Particulate emissions for pushing operations amount to about 0.3 g/kg of coal charged (0.6 lb/ton).[24]

Quenching results in entrainment of the fine coke breeze in the steam plume which is formed during the pushing operation as a result of water being flash-evaporated on the coke. The average weight of particulates emitted during a 2-minute quench cycle at one plant was calculated to be

2.7 kg (6.0 lb). These emissions could be reduced to less than 0.4 kg (0.88 lb) by installation of baffles.[20]

Total particulate emissions from unloading, charging, coking cycle, discharging, and quenching amount to 1.75 g/kg of coal charged (3.5 lb/ton) with no controls.[24] Measurements indicate that lead contents are about 0.01 percent of particulate emissions from pushing operations.[25] Nationwide lead emissions from coking operations in 1975 were 11 Mg (12 tons). This estimate is based on a particulate emission factor of 1.75 g/kg of coal (3.5 lb/ton), 0.01 percent lead concentration in the dust, and a 1975 coal consumption of 60 Tg (6.6×10^7 ton).[26]

C. Blast Furnace Emissions: The blast furnace operates at about 1540°C (2804°F). Many furnaces now operate at pressures of about 68.9 kPa (10 psi). The pressure range in newer plants is 101 kPa (14.7 psi) to 431 kPa (62.6 psi).[20]

A high degree of particulate emission control is necessary to prevent plugging of the stoves (heat exchangers). Without controls, dust emissions are 75 g/kg iron (150 lb/ton).[22] Particulates are also emitted during each tap, but the fumes enter the atmosphere through the open sides of the cast house. Blast furnace slips, which create emissions that bypass the control devices, rarely occur.[20] Table 4-39 summarizes typical exhaust gas characteristics for blast furnace operations.

Table 4-39. CHARACTERISTICS OF UNCONTROLLED EXHAUST GAS FROM IRON BLAST FURNACES

Parameters	Standard international units	English units	References
Gas flow rate	0.9-1.3 $m^3/s \cdot Mg \cdot h^{-1}$ iron	1800-2500 acfm/tph iron	20
Temperature	180-280°C	360-540°F	20
Moisture content	2% v	2% v	20
Grain loading	27.5 g/m^3	12 gr/scf	20
Lead content of particulate	830 ppm (wt)	830 ppm (wt)	23
Emission factors			
° particulate	75 g/kg iron	150 lb/ton iron	22
° lead	62 mg/kg iron	0.124 lb/ton iron	

Based on a lead content in the particulate of 830 ppm,[23] the lead emission factor is 62 mg Pb/kg of iron produced (0.124 lb/ton). Based on a 98 percent level of control and 72.5 Tg of iron produced (7.99×10^7 tons) in 1975,[18] lead emissions from blast furnace operation were 91 Mg (100 tons).

D. Open-Hearth Furnace: The tapping temperature of steel in an open-hearth steel furnace is about 1595°C (2903°F), varying with composition and grade of steel.[20]

Emissions from open-hearth operations include particulates and fluorides. Fluoride emission rates depend on the fluorspar content of the iron. Uncontrolled particulate emissions from a furnace without oxygen lancing are about 4.2 g/kg of product (8.4 lb/ton); with oxygen lancing, emissions range from 4.7 to 11.0 g/kg (9.4 to 22 lb/ton) and average about 8.7 g/kg (17.6 lb/ton).[22]

Table 4-40 presents characteristics of open-hearth exhaust gas. Lead emissions from open hearths range from 0.05 to 2.2 percent of total particulate emissions, averaging about 0.8 percent.[19,23,28] Assuming predominately oxygen lancing operations, the lead emission factor averages 70 mg/kg of steel (0.14 lb/ton). With a collection efficiency of about 90 percent and a steel output from open hearths of 18.2 Tg (2.01×10^7 tons),[18] nationwide lead emissions were 128 Mg (141 tons) in 1975.

Table 4-40. CHARACTERISTICS OF UNCONTROLLED EXHAUST GAS FROM OPEN-HEARTH STEEL FURNACES

Parameters	Standard international units	English units	References
Gas flow rate[a]	1.2 $m^3/s \cdot Mg \cdot h^{-1}$	2300 scfm/tph	20
Temperature	< 980°C	< 1800°F	20
Grain loading	7-12 g/m^3	3-5 gr/scf	20
Particle size	50-75% < 5 μm	50-75% < 5 μm	
Lead content of particulate[b]	0.8% w	0.8% w	19, 23, 28
Emission factors			
° particulate			
- with O_2 lance	8.7 g/kg steel	17.4 lb/ton steel	22
- no O_2 lance	4.2 g/kg steel	8.4 lb/ton steel	22
° lead	70 mg/kg steel	0.14 lb/ton steel	

[a] Based on throughput rates.

[b] Lead content of particulate ranges from 0.05 to 2.2 percent with an average of 0.8% wt.

E. Basic Oxygen Furnace: Operating time per melt in a basic oxygen furnace is 50 minutes. Since the BOF process is exothermic, no additional heat is required. Refining occurs at approximately 2000°C (3632°F) at atmospheric pressure.[20]

Particulate emission rates are so high that all basic oxygen units are equipped with high-efficiency particulate control devices. About 25.5 g/kg of particulate (51 lb/ton) is produced, and about 0.1 g/kg of gaseous fluorides (0.2 lb/ton).[22] Most of the furnace emissions are controlled by venturi scrubbers or electrostatic precipitators with 98 percent collection efficiency.[20] Table 4-41 presents characteristics of BOF exhaust gases.

Lead emissions from BOF furnaces run about 0.4 percent of particulate emissions,[23,28] giving an emission factor of 0.1 g Pb/kg (0.2 lb/ton) of steel produced. Based on 98 percent collection efficiency and a 1975 BOF output of 65.12 Tg (7.18×10^7 tons),[18] nationwide lead emissions were 130 Mg (144 tons).

F. Electric Furnace: Particulate emissions from electric furnaces consist primarily of oxides of iron, manganese, aluminum, and silicon. Many new electric furnace installations use baghouses.[20] Uncontrolled particulate emission rates are about 4.6 g/kg of metal (9.2 lb/ton) without

oxygen lancing and about 5.5 g/kg of metal produced (11.0 lb/ton) with oxygen lancing.[22] Exhaust gas characteristics are presented in Table 4-42.

Because the feed to electric furnaces normally contains high volumes of scrap, which contributes higher lead inputs than other furnaces receive, lead emissions may range from 0 to 5.7 percent of particulate emissions, averaging about 2.0 percent.[8,19,23,28] Since oxygen lancing is being used more frequently for electric furnaces, the uncontrolled lead emission factor is 0.11 g/kg of steel produced (0.22 lb/ton). With an average collection efficiency of about 90 percent and a 1975 output of 20.57 Tg of steel (2.27×10^7 tons)[18], total lead emissions were 227 Mg (250 tons) from U. S. electric arc steel production.

4.5.2.3. Fugitive Emissions[11]

A process flow diagram for iron production is shown in Figure 4-45 with each potential process fugitive emission source encircled and numbered. The largest potential sources of fugitive particulate emissions are iron ore handling and storage. Other major potential sources are sintering operations, blast furnace tapping, and slips.

The characteristics and size distributions of the fugitive emissions from various sources are assumed to be similar to the uncontrolled exhaust emissions.

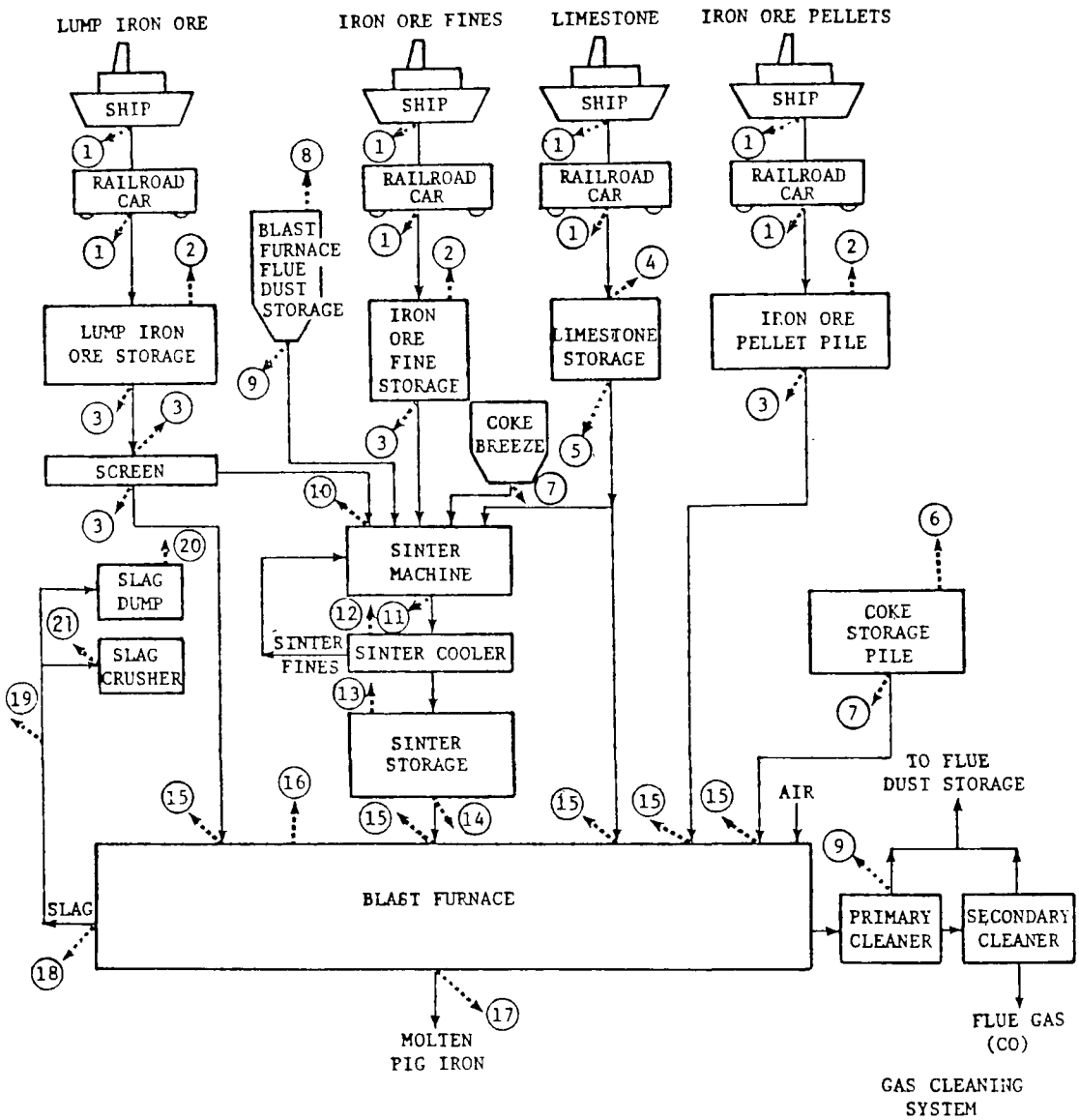

Figure 4-45. Process flow diagram for iron production showing potential industrial process fugitive particulate emission points.

Fugitive emission can be controlled by enclosure of the conveyor system for handling and transfer of raw materials, by use of a fixed hood constructed around the sinter machine discharge which can then be vented to a baghouse, and by better operating practices and better quality of raw materials used in the blast furnace and sintering machines.

4.5.2.4 Control Techniques - Cyclones are suitable for collecting medium and coarse dusts, but are not suited for very fine dusts or metallurgical fumes. Their principal application is as precleaners for other types of control equipment. As precleaners, cyclones are used in series with wet scrubbers and ESP's for cleaning blast-furnace gas and as precleaners for ESP's handling the dust and gas from a sinter-plant wind box.[19]

Wet scrubbers of various types have been used in the integrated iron and steel industry for many years. Installation of orifice, variable-orifice, or venturi scrubbers in the gas system is a practical way of obtaining cleaner gas from modern blast furnace systems with furnace top pressures above atmospheric. The pressure required to achieve the necessary cleaning action was already in the blast furnace, and little additional auxiliary equipment is required. High-energy scrubbers are used to control emissions from sinter plants and BOF's, as well as from

Table 4-41. CHARACTERISTICS OF UNCONTROLLED EXHAUST GAS FROM BASIC OXYGEN FURNACES

Parameters	Standard international units	English units	References
Gas flow rate[a]	0.8 $m^3/s \cdot Mg \cdot h^{-1}$	1500 scfm/tph	20
Temperature[b]	82-260°C	180-500°F	20
Grain loading	4.5-12 g/m^3	2-5 gr/dscf	20
Particle size distribution	0.1 to 1μm - 95%	0.1 to 1 μm - 95%	20
Lead content of particulate	0.4% (wt)	0.4% (wt)	23,28
Emission factors			
° particulate	25.5 g/kg steel	51 lb/ton steel	22
° lead	0.1 g/kg steel	0.2 lb/ton steel	

[a] Based on throughput rates.

[b] After cooling and conditioning.

Table 4-42. CHARACTERISTICS OF UNCONTROLLED EXHAUST GAS FROM ELECTRIC ARC FURNACES

Parameters	Standard international units	English units	References
Gas flow rate	2.3 $m^3/s \cdot Mg \cdot h^{-1}$	4,300 scfm/tph	20
Temperature	650-980°C	1200-1800°F	20
Grain loading	5-7 g/m^3	2-3 gr/scf	20
Lead content of particulate[a]	2.0% wt	2.0% wt	8,19,23,28
Emission factors			
° particulate			
- with O_2 lance	5.5 g/kg steel	11.0 lb/ton	22
- no O_2 lance	4.6 g/kg steel	9.2 lb/ton	22
° lead	0.11 g/kg steel	0.22 lb/ton	22

[a] Lead content of particulate emissions range from 0 to 5.7 percent, with 2 percent being a typical average.

blast furnaces. One of the principal advantages of high-energy wet scrubbers is their ability to handle variable gas volumes, while maintaining the required operating efficiency.[19]

ESP's are used for removal of dust particles (primarily iron oxide) from exhaust gases of ironmaking and steelmaking processes. Because of the wide range of resistivities that can be encountered, it is preferable to determine resistivities for a specific process when designing precipitator installations. Dusts can be conditioned to reduce the resistivities and to facilitate dust collection in the ESP. The lower the resistivity of the dust, the less electrical power is required to effect collection. Conditioning of metallurgical dusts for collection is done in the iron and steel industry by addition of water, which cools the gases in addition to conditioning them.[19]

A. Sinter Plant Controls: Cyclone dust collectors are normally used in sinter plants as precleaners.

Early application of wet scrubbers to sinter plants caused erosion and imbalance of the fan blades on the exhaust-system blowers, which provide draft through the sinter bed to ignite the fuel. Erosion of the blades has been a problem even with dry pollution-control systems. The imbalance in the fan blades is aggravated by wet scrubbers because the moist dust that is carried over to the fan tends to accumulate on the blades, causing severe vibrations and sometimes major breakdowns. This situation is minimized by constant preventive maintenance to remove the dust build-up.[19]

The sinter plant (with its multitude of transfer points for materials and discharge points for receiving, cooling, and screening the sinter) creates a difficult fugitive emission problem. ESP's, fabric filters and scrubbers are used for a single plant, or if the operation can be sufficiently enclosed, a central installation may suffice. ESP's can be used as secondary air-cleaning units in sinter-plant operations for the treatment of dust-laden gases from sintering-strand windboxes.[19]

Limestone additions required in the production of the self-fluxing sinters used in modern plants increase the

problems of dust-collecting systems, with the result that additional ESP capacity or preconditioning is required.[19]

Table 4-43 shows the performance of a fabric filter application on a sinter plant windbox. The windbox exhausts are controlled by four parallel cyclones followed by a baghouse. The cyclones are described as follows:[29]

gas flow	68 m^3/s (144,000 acfm)
temperature	177 °C (350°F)
pressure drop	2.5 kPa (10 in. w.g.)
efficiency	80-85%

The fabric filter is designed as follows:[29]

filtering velocity	2.94 cm/s (1.47 fpm)
gas flow	85 m^3/s (180,000 acfm)
temperature	135°C (275°F)
pressure drop	3.5 kPa (14 in. w.g.)
cleaning	reverse-air
efficiency	99%

Well-controlled facilities generally emit less than 0.11 g/m^3 (<0.05 gr/scf) after control with fabric filters, wet ESP's, venturi scrubbers, and gravel bed filters.[29]

B. Coking Oven Controls:[21] A number of operations involved in coking contribute to lead emissions due to the trace lead content of coal. Unloading and charging of the coal into the coke oven are most recently coming under control. Automated charging cars are being equipped with wet scrubbers to collect the coal dust and smoke generated by charging hot ovens. However, most larry cars are not equipped with scrubber controls in the U.S. but use controlled charging techniques to reduce emissions.

Table 4-43. SUMMARY OF PERFORMANCE TEST RESULTS ON A FABRIC FILTER SERVING SINTER PLANT[29]

Parameter	Outlet
Process feed rate, Mg/hr	133
tph	147
Flow rate, m^3/s	97.4
acfm	207,000
Temperature, °C	160
°F	321
Emissions	
g/m^3	0.12
gr/scf	0.050
g/kg	0.188
lb/ton	0.376

The coking cycle is designed to collect the volatile matter, removed with a manifold collecting main with sprays, followed by coal chemical removal and separation equipment. Volatile lead compounds would most likely be evolved in this oxygen-poor atmosphere, and very few lead mineral compounds are broken down and emitted. The pushing operation evolves the greatest quantity of lead by oxidation of lead minerals in the coke. Progress is being made in the control of pushing emissions.

C. Blast Furnace Controls: Cyclones are normally used as precleaners in series with scrubbers and ESP's. High-energy scrubbers with fixed-orifice plates have been installed with water introduced upstream from the orifice plate. These scrubbers operated at pressure drops of 7.5 to 12.5 kPa (30 to 50 in. H_2O), with resulting output loadings ranging from 20 to 70 mg/m^3 (0.01 to 0.03 gr/ft^3). The orifice scrubber, however, had the major disadvantage that it could not handle variations in gas flow, and consequently could not meet the required emission limits during certain phases of blast-furnace operation when the gases come from the blast furnace at reduced velocity. The need for high-energy wet scrubbers that could handle variable gas flows from a blast furnace led to development of variable-orifice scrubbers.[19] The first application of venturi scrubbers to blast-furnace gas

was reported in 1955. Outlet dust loadings of 50 mg/m^3 (0.02 gr/scf) can be obtained with a water rate of 0.44 lps (7 gal/min) and at a pressure drop of only 5 kPa (20 in. H_2O).[19]

Electrostatic precipitators perform efficiently on blast-furnaces for two reasons. First, the blast furnace produces gas almost continuously except for comparatively brief intervals when the blowing rate of the blast furnace is reduced when slag is flushed or iron is cast. Second, a high percentage of the particulate emissions are already removed by the wet-scrubbing systems, which condition the gases before they enter the ESP.[19]

D. Open-Hearth Furnace Controls:[19] Wet scrubbing of open-hearth gases used to be considered economically expedient only for shops that were to be operated during high peak demands for steel, when the low capital cost was considered an advantage. Some newer open-hearth shops found, however, that wet scrubbers were economically attractive when the shop either had no waste heat boilers or the boilers could not reduce the gas temperatures enough to warrant installation of ESP's or baghouses. The first open hearth installation of a wet scrubber was made in 1959, and others have followed. Output gas loadings of 20 to 110 mg/m^3 (0.01 to 0.05 gr/ft^3) have been reported, with cleaning efficiency

relating directly to the pressure drop of the scrubber. The clean-gas dust loadings for an operating open-hearth wet scrubber are about 0.18 to 0.03 g/m^3 (0.08 to 0.015 gr/scf) for pressure drops of 6.5 kPa to 9.2 kPa (26 to 37 in. H_2O) with use of oxygen lancing during the refining period. This performance is representative of open-hearth operation with low oxygen-blowing rates and is not necessarily representative of present-day practice with higher oxygen-blowing rates.

ESP's are used to control emissions from oxygen lancing in open-hearth furnaces. The major problem with respect to efficiency of ESP's on open hearths stems from the variable fuel input which in turn affects the moisture content of the gases. A dry-gas condition occurs shortly after the hot-metal addition, lasting for about 15 to 20 minutes. It is caused by a low fuel-firing rate, low use of atomizing steam, and a low initial oxygen-lancing rate. The low (2 percent) moisture results in poor energy efficiency, caused by higher resistivities requiring more power for collection of the fume. In some cases, ESP efficiency may be improved in two ways: (1) power input to the precipitator can be increased, or (2) a steam-injected system can be installed to supply the desired moisture. Increased power may be ineffective, as with systems using limestone, which causes

back ionization. Table 4-44 shows the performance of an ESP serving an open hearth furnace.

E. Basic Oxygen Furnace Controls:[19] About the same numbers of high-energy wet scrubbers and ESP's have been installed on basic oxygen furnaces. One of the principal reasons for selecting ESP's over high-energy wet scrubbers is the water-treatment problem. Problems with BOF installations are similar to those associated with wet scrubbers in other applications.

Improper performance of wet scrubbers can be attributed to failure of materials to withstand the abrasive and corrosive action of the dust-laden water or to misapplication of construction materials.

Table 4-45 indicates the performance of a closed hood venturi scrubbing system installed on a basic oxygen furnace producing 182 Mg (200 tons) of steel per heat. Other furnaces equipped with venturi scrubbers had outlet particulate loadings from 0.01 to 0.1 g/m^3 (0.004 to 0.04 gr/dscf).[29]

Electrostatic precipitators installed on basic oxygen furnaces reduce particulate loadings to 0.024 to 0.080 g/m^3 (0.011 to 0.035 gr/dscf) which is equivalent to 0.042 to 0.14 g/kg (0.083 to 0.27 lb/ton) of steel.[29]

Problems associated with applications of ESP's to basic oxygen furnaces are variability in flow, moisture content,

Table 4-44. PERFORMANCE OF AN ELECTROSTATIC PRECIPITATOR SERVING AN OPEN-HEARTH FURNACE[5]

Furnace size, Mg	57.1
ton	63
Gas volume, std. m^3/s	7.03
scfm	14,900
Gas temperature,[a] °C	238
°F	460
Collection efficiency, %	98.98

Emissions	Inlet	Outlet
g/m^3	0.817	0.0092
gr/scf	0.355	0.004
g/kg	19.8	0.203
lb/ton	39.6	0.406

[a] The raw exhaust gas enters a waste heat boiler at 721°C (1330°F) and is cooled to about 238°C (460°F).

Table 4-45. SUMMARY OF PERFORMANCE TEST RESULTS ON A VENTURI SCRUBBING SYSTEM SERVING A BASIC OXYGEN FURNACE[29]

Parameter	Outlet
Output, Mg	1,100
tons	1,214
Flowrate, std. m^3/s	18.6
scfm	39,300
Temperature, °C	64
°F	148
Moisture, % v	12.2
Emissions	
g/m^3	0.032
gr/scf	0.014
g/kg steel	0.008
lb/ton steel	0.0158

and temperature of the entering gases. A significant design problem for new basic oxygen furnaces is the possibility of increases in production rate as technology advances. BOF technology is developing so rapidly that significant increases in production do occur, sometimes as high as 22 percent. One reason for increased productivity is increased oxygen-blowing rates, resulting in at least a proportionate increase in iron-oxide fume. Such larger-volume increases can render the ESP system inadequate.

Maintenance problems with ESP's are associated with wire rappers, vibrators, and insulators. The hoods over the BOF can result in operating problems. The gap between the BOF and the hood is usually dictated by the anticipated operating conditions and the anticipated buildup of a skull on the mouth of the furnace. Excess buildup can restrict the flow of air required for combustion of the carbon monoxide, resulting in a potentially dangerous amount of carbon monoxide reaching the ESP and causing an explosion hazard.[19]

Electric Furnace Controls:[19] Fabric filter and high energy venturi scrubbers have been applied successfully to control of emissions from both single and multiple electric furnaces ranging up to 91 and 136 net-Mg capacity (100 and 150 net-tons). Because the furnace design and operating characteristics are variables, however, development of pollution controls is not as straight forward as for other

steelmaking operations. One of the major design problems entails the fume collection system. Most electric-arc furnaces are top-charged, involving removal of the roof during charging Capture of fumes by hoods and by direct extraction during melting and refining has not completely solved the problems of collection and containment. Techniques for control of fumes from the plant roof have been achieved to control emissions from the entire plant.

Table 4-46 indicates typical performances of a fabric filter on electric arc furnaces producing steel. In this particular test, two 22 Mg (25 ton) furnaces producing alloy and stainless steels were controlled by a baghouse.

Emissions from well-controlled electric arc furnaces range from 3.9 to 18 Mg/m^3 (0.0017 to 0.008 gr/dscf) or 0.015 to 0.067 kg/h per Mg (0.034 to 0.148 lb/hr per ton) of furnace capacity.[29]

Table 4-46. PERFORMANCE OF FABRIC FILTER SERVING AN ELECTRIC-ARC FURNACE [29]

Parameter	Inlet	Outlet
Furnace size, Mg	45	45
tons	50	50
Gas volume, std. m^3/s	99	7.6
dscfm	209,000	16,160
Temperature, °C	38	33
°F	100	91
Moisture, % v	1.02	1.3
Emissions		
g/m^3	0.059	0.0039
gr/scf	0.0257	0.0017
kg/h·Mg capacity	0.462	0.031
lb/hr·ton capacity	0.923	0.062

4.5.2.5 Control Costs - Particulate control costs given in this section, except for coke ovens, are derived from a detailed cost analysis in the literature.[29] This extensive study is assumed to provide more accurate cost data than for the procedure given in Appendix B. Equipment costs include foundations, ductwork, stack, collector, fan system, structures, electrical, water treatment and piping, controls, and cooling equipment. These costs do not include product recovery cyclones and equipment upstream of product recovery units, including ductwork, canopy hoods, cooling equipment, etc. Capital costs include material and labor for field erection, freight, taxes, insurance, engineering, start-up, inventory, land, and interest during construction. Annualized costs include utilities, maintenance, labor, overhead, and fixed costs (with capital recovery).

A. Sintering Plant Windbox - A 907 Mg/day (1000 TPD) sinter plant windbox discharges 50 m^3/s at 163°C (105,000 acfm at 325°F), after cooling and product recovery, to a venturi scrubber. Particulate emissions are about 160 kg/h (350 lb/hr) assuming 80 percent efficient cyclones. The average state emission limitation is 23 kg/h (50 lb/hr), assuming 2.3 kg input per kg output (2.3 lb input/lb output).

Total capital costs for the above control system are estimated at $945,000. Total annualized costs are estimated

at $441,000. Product recovery credit is not included in the costs. Annual operating time is approximately 8000 hours and the annual labor requirement is about 6000 hours.[29]

A 5440 Mg/day (6000 TPD) sinter plant windbox discharges 285 m^3/s at 163°C (603,000 acfm at 325°F), after cooling and product recovery, to a venturi scrubber. Particulate emissions are about 960 kg/h (2100 lb/hr) assuming 80 percent efficient cyclones. The average state emission limitation is 32 kg/h (70 lb/hr).

Total capital costs for the above system are estimated at $4.01 million. Total annualized costs are estimated at $1.79 million, not including dust recovery credit. An annual operating time of 8000 hours and operating labor of 2 men/day are assumed.

The capital and annualized costs are expressed in terms of collector inlet gas volume and annual labor hours below. These equations are developed from the two model plant examples given above.

S.I. units

Capital, $\$ = 3.68 \times 10^4 V^{0.83}$

Annualized, $\$ = 1570V + 19.6H + 10^4 V^{0.83}$

$V = m^3/s$ at 163°C
H = annual labor hours

$100 < V < 950$
range

English units

Capital, $ = $63.9\ Q^{0.83}$

Annualized, $ = $0.72Q + 19.6\ H + 17.4Q^{0.83}$

Q = acfm at 325°F
H = annual labor hours

200,000 < Q < 1,800,000
range

B. Sinter Plant Material Handling - A 907 Mg/day (1000 TPD) sinter plant material handling operation is controlled by a fabric filter at a rated capacity of 23 m^3/s at 57°C (48,000 acfm at 135°F). Capital costs are estimated at $617,000, and annualized costs are estimated at $245,000, not including dust recovery credit. An annual operating time of 8000 hours and operating labor of 3000 hours are assumed.

A 5440 Mg/day (6000 TPD) sinter plant material handling operation is controlled by a fabric filter system rated at 118 m^3/s at 57°C (250,000 acfm at 135°F). Capital costs are estimated at $1.63 million and annualized costs are estimated at $685,000, not including dust recovery credit. An annual operating time of 8000 hours and operating labor of 7300 hours are assumed.

The capital and annualized costs are expressed in collector inlet volume and annual labor hours below:

S.I. units

$$\text{Capital, \$} = 97{,}600\ V^{0.59}$$

$$\text{Annualized, \$} = 1100V + 25{,}500V^{0.59} + 19.6H$$

V = m^3/s at 57°C
H = annual labor hours

$20 < V < 120$
range

English units

$$\text{Capital, \$} = 1065\ Q^{0.59}$$

$$\text{Annualized, \$} = 0.52Q + 278Q^{0.59} + 19.6H$$

Q = acfm at 135°F
H = annual labor hours

$40{,}000 < Q < 250{,}000$
range

C. Electric Arc Furnace - Two 22.7 Mg/heat (25 ton/heat) electric arc furnaces discharge 28.3 m^3/s at 135°C (60,000 acfm at 275°F), after cooling, to a fabric filter system. Capital costs are estimated at $578,000 and annualized costs are estimated at $248,000, not including dust recovery credit. An annual operating time of 8000 hours and operating labor of 4000 hours are assumed.

Two 227 Mg/heat (250 ton/heat) electric arc furnaces discharge 165 m^3/s at 135°C (350,000 acfm at 275°F), after cooling, to a fabric filter system. Capital costs are estimated at $3.01 million; annualized costs are estimated at $1.11 million. Operating time and labor requirements are each

8000 hours per year.

The furnace exhausts are cooled from 815°C to 315°C (1500°F to 600°F) by a radiant heat exchanger and from 315°C to 135°C (600°F to 275°F) by air dilution prior to entering the fabric filter. Uncontrolled particulate emissions are 5.5 g/kg (11 lb/ton) of which 2 percent is lead. This control technique provides 99 percent or more reduction, sufficient to meet state regulations.

The capital and annualized costs are expressed in terms of collector inlet volume and annual labor hours below:

S.I. units

$$\text{Capital, } \$ = 26{,}000\ V^{0.93}$$

$$\text{Annualized, } \$ = 1060V + 6790V^{0.93} + 19.6H$$

$V = m^3/s$ at 135°C
H = annual labor hours

$28 < V < 165$
range

English units

$$\text{Capital, } \$ = 21\ Q^{0.93}$$

$$\text{Annualized, } \$ = 0.5Q + 5.48Q^{0.93} + 19.6H$$

Q = acfm at 275°F
H = annual labor hours

$60{,}000 < Q < 350{,}000$

D. Open Hearth - A 54 Mg/heat (60 ton/heat) open hearth furnace discharges 13.7 m^3/s at 260°C (29,000 acfm at 500°F) after product recovery cyclones and cooling, to an electrostatic precipitator. Capital costs are estimated at $655,000 and annualized costs are estimated at $240,000. An annual operating time of 8000 hours and annual labor of 4000 hours are assumed.

A 544 Mg/heat (600 ton/heat) open hearth furnace discharges 106 m^3/s at 260°C (225,000 acfm at 500°F), after product recovery and cooling, to an electrostatic precipitator. Capital costs are estimated at $3.28 million and annualized costs are estimated at $1.08 million. An annual operating time of 8000 hours and annual labor of 8000 hours are assumed.

Gases are cooled to 260°C (500°F) by waste heat boilers. Boilers and boiler fans are not included in the capital costs. Open hearth emissions are about 8.7 g/kg steel (17 lb/ton), averaging 0.8 percent lead. The systems are designed to meet state standards.

Capital and annualized costs are expressed in terms of collector inlet volume and annual labor hours below:

S.I. units

Capital, $ = $83,300\ V^{0.787}$

Annualized, $ = $1820V + 18,900V^{0.787} + 19.6H$

$V = m^3/s$ at 260°F
H = annual labor hours

$10 < V < 120$
range

English units

$$\text{Capital, \$} = 201\ Q^{0.787}$$

$$\text{Annualized, \$} = 0.86Q + 45.6Q^{0.787} + 19.6H$$

Q = acfm at 500°F
H = annual labor hours

$20{,}000 < Q < 300{,}000$
range

E. Blast Furnace - A 210 Mg/hr (230 tph) capacity blast furnace will exhaust 100 std. m^3/s (210,000 scfm) to a two-stage high-energy scrubber. Particulate emissions are 3100 kg/h (6900 lb/hr) assuming 80 percent product recovery. Lead content may be near 800 ppm. The average state standard of 27 kg/hr (60 lb/hr) can be achieved by 99 percent reduction. Capital costs are estimated at $6.2 million. Annualized costs are estimated at $1.91 million. I.D. fans are not required. Annual operating and labor time are each assumed to be 8000 hours.

F. Coking[39] - Although there is no one ideal solution to coke oven emissions, there are several alternative developments for controlling coke oven charging emissions. The most significant of these alternatives are: pipeline charging, the AISI system, wet scrubber charging, jumper

pipe charging, dual collecting main system, and full enclosure of the battery. It appears that the jumper pipe charging method is,with a new larry car, the most economical alternative for retrofitting existing coke oven batteries.

The installed equipment costs for a single battery are as follows:

- Mechanical feed larry car with jumper pipe, lid lifters, interlock, environmental unit, gooseneck cleaner $880,000
- Leveler bar smoke seal $ 68,000
- Steam piping and nozzles $ 68,000
- Realign charging hole castings $ 81,000
- New charging hole and standpipe lids with damper operation $108,000

For four batteries of sixty fifteen-ton ovens, capital costs are estimated at $3.64 million. Annualized costs are estimated at $400,000, including operation, maintenance, repair, taxes, insurance, and labor credits.

G. Basic Oxygen Furnace - A 91 Mg/h (100 TPH) basic oxygen furnace exhausts 104 m^3/s of gas at 82°C (220,000 acfm at 180°F) to a high energy venturi scrubber, after cooling and conditioning with cyclone separators and a spray chamber. The uncontrolled particulate emission rate is 2.3 Mg/h (5,100 lb/hr), of which 0.4 percent by weight is lead. With 70 to 80 percent efficient cyclones, a 98 percent efficient venturi scrubbing system will meet a typical state emission standard of about 13.6 kg/h (30 lb/hr) particulate.

The capital costs are estimated at $4.22 million. This includes the collector, fan system, duct work, spray chamber, and wastewater treatment.

The annualized costs are estimated at $2.05 million, including utilities, maintenance, labor, overhead, and fixed costs (with capital recovery). Labor and operating time is 8000 hours per year. Solids collected are recycled to the furnace.

A 272 Mg/hour (300 ton/hour) basic oxygen furnace exhausts 312 m^3/s of gas at 82°C (660,000 acfm at 180°F) to a high energy venturi scrubber after being cooled from 650°C (1200°F) by water sprays. The particulate emission rate is about 8.55 Mg/h (15,300 lb/hr) before treating in product recovery cyclones. The lead content of the particulate matter is about 0.4 percent by weight. With 80 percent

efficient cyclones, a 98 percent efficient scrubber will meet a typical state emission regulation of about 27.2 kg/h (60 lb/hr).

The capital costs for the venturi scrubbing system are estimated at $8.91 million. This includes cooling equipment, ductwork, fan system and wastewater treatment.

The annualized costs are estimated at $5.15 million, including utilities, maintenance, labor, overhead and fixed costs (with capital recovery). Annual operating time is assumed at 8000 hours. Labor requirements are about 16,000 hours/year. Solids collected are recycled to the furnace.

The capital and annualized cost equations are developed from the two model plants and are given below in terms of inlet flow rate and annual labor hours;

S.I. units

$$\text{Capital, \$} = 18{,}000\ V^{0.68}$$

$$\text{Annualized, \$} = 48{,}800\ V^{0.68} + 19.6\ H + 7620\ V$$

$V = m^3/s$ at 82°C
H = annual labor hours

$100 < V < 300$
range

English units

$$\text{Capital, \$} = 983\ Q^{0.68}$$

$$\text{Annualized, \$} = 267\ Q^{0.68} + 19.6\ H + 3.6\ Q$$

Q = acfm at 180°F
H = annual labor hours

$220{,}000 < Q < 660{,}000$

4.5.2.6 Impacts

A. Sintering

Particulate emission reductions for sintering controls are estimated at 21 g/kg sinter (42 lb/ton) at a lead content of 320 ppm. For a 7 kPa (30 in. WG) venturi for the large model sinter plant, energy requirements are 0.024 GJ/Mg of sinter (0.024 MM Btu/ton) and 0.011 GJ/Mg of sinter (0.011 MM Btu/ton) for the material handling fabric filter, compared to a total of 32 GJ/Mg (32 MM Btu/ton) to produce finished steel.[30] Solid wastes generated by the iron and steel industry averages about 1.3 Mg/Mg product (1.3 ton/ton) including mining, milling, and processing,[31] compared to about 8 kg/Mg iron and steel (16 lb/ton) generated by air pollution control on sintering. Raw wastewater discharged by sintering operations amounts to about 0.1 to 0.4 m^3/Mg of sinter (400 to 1500 gal/ton),[32] a relatively small amount. Based on data contained in Table 4-38, about 24 m^3/Gg of sinter (100 gal/ton) could be generated by a wet collector. However, the total wastewater generated by the steel plants is estimated at 5 to 10 m^3/Mg steel (20,000 to 40,000 gal/ton steel) from the raw ore to the finished steel.[33]

B. Blast Furnace

Particulate emission reduction with blast furnace emission control is estimated at 75 kg/Mg iron (150 lb/ton)

containing about 800 ppm of lead. Total energy demand for a blast furnace is 13 GJ/Mg (13 MM Btu/ton) of steel produced.[30] The energy requirements for the high-energy scrubber on the model plant, assuming 7.5 kPa (30 in. WG) pressure drop, is about 0.013 GJ/Mg (0.013 MM Btu/ton) of steel, about 0.1 percent of the total plant consumption. Total plant raw wastewater amounts to 5 to 10 m^3/Mg of steel (20,000 to 40,000 gal/ton),[33] compared to that produced by the furnace itself which is 0.5 to 1.3 m^3/Mg (2000 to 5600 gal/ton).[32] Water requirements for the scrubber could be about 1.3 m^3/Mg of steel (300 gal/ton) or a maximum increase of 2 percent. Solid waste (slag) from the blast furnace amounts to 200 kg/Mg of iron (400 lb/ton)[33] which is recycled to the sintering operation. Air pollution control may generate an additional 75 kg/Mg (150 lb/ton) which is also recycled to the sinter plant.

C. Open Hearth Furnace

Particulate emission reduction by air pollution control is estimated at 8.7 kg/Mg steel (17.4 lb/ton) for the open-hearth furnace. Lead content is about 0.8 percent by weight. Energy demand for the process is about 3.2 GJ/Mg steel (3.2 MM Btu/ton)[30] compared to about 3.4 GJ/Mg (3400 Btu/ton) for the ESP systems on the model plant, assuming a 0.5 kPa (2 in. WG) pressure drop. The wastewater produced

amounts to 2.5 m^3/Mg steel (10^4 gal/ton).[32] Although wet collectors are no longer feasible control for open hearths, 24 m^3/Gg (100 gal/ton) would be generated by this type of emission control. Solid wastes from open-hearths are not quantified here, but 1.3 Mg/Mg steel (1.3 ton/ton) is the industry's average to produce steel,[31] compared with only 8.7 kg/Mg (17.4 lb/ton) contributed by emission control. Solid wastes are generally recycled.

D. Basic Oxygen Furnace

Particulate emission reduction from BOF controls will be about 25 kg/Mg of steel (50 lb/ton) with a lead content of about 0.4 percent. The energy required for the process is about 0.35 GJ/Mg steel (0.35 MM Btu/ton).[30] The high-energy scrubber, operating at 8 kPa (32 in. WG) pressure drop, requires about 0.05 GJ/Mg steel (0.05 MM Btu/ton) for the large model BOF, compared to a total of 32 GJ/Mg (32 MM Btu/ton) to produce steel.[30] About 0.54 to 4.3 m^3/Mg steel (2200 to 18,000 gal/ton) of raw wastewater is generated by the BOF.[32] The scrubbing system may produce about 23 m^3/kg (110 gal/ton). Solid wastes from the BOF, including emission control, is generally recycled. The solid wastes collected by emission control devices amount to 25 kg/Mg steel (50 lb/ton) compared to about 1.3 Mg/Mg steel (1.3 ton/ton) for the entire steelmaking process.[31]

E. Electric Arc Furnace

Particulate emission reductions by control systems on electric arc furnaces amount to about 5 kg/Mg steel (10 lb/ton) with a lead content ranging from 0 to 5.7 percent, with an average of 2.0 percent. Energy requirements for the electric arc process are about 2.0 GJ/Mg steel (2.0 MM Btu/ton) and 32 GJ/Mg (32 MM Btu/ton) for the entire steelmaking process.[30] The fabric filter on the large model process consumes about 14 GJ/kg of steel (0.014 MM Btu/ton) with a pressure drop of 1.2 kPa (5 in. WG). A venturi scrubber will consume 84 GJ/kg (0.084 MM Btu/ton) with a pressure drop of 7.5 kPa (30 in. WG). Electric arc furnaces generate 0.4 to 1.3 m^3/Mg steel (100 to 310 gal/ton) of raw wastewater[31] compared to a total of 80 to 160 m^3/Mg (20,000 to 40,000 gal/ton) for the entire steelmaking operation.[32] For the model electric arc furnace about 0.8 m^3/Mg steel (200 gal/ton) of wastewater will be generated. Solid waste produced by electric arc furnaces amount to about 5 kg/Mg steel (10 lb/ton) which is generally recycled.

F. Coking

Particulate emission reduction by coking controls are estimated at 1.8 kg/Mg (3.5 lb/ton) of coal charged. Pushing emissions may be about 0.01 percent lead. No

volumetric data or energy consumption data on coking control systems are available, however total coking energy consumption has been estimated at 2.85 GJ/Mg of steel produced (2.85 MM Btu/ton).[30] No water consumption can be calculated, however the total raw wastewater amounts to 0.16 to 17 m^3/Mg (40-4200 gal/ton) of steel.[32] No solid waste data are available for the coking operations, however only 1.8 kg/Mg coal charged (3.5 lb/ton) of solid wastes would be generated by emission control.

4.5.3 Ferroalloy Production

The main use of ferroalloys in the United States is in the deoxidation, alloying, and graphitization of steel. Ferroalloys consist of iron in combination with one or more other elements, including silicon, chromium, manganese, and many other elements in minor quantities.

The United States is the world's leading producer of ferroalloys, producing 1.83 Tg (2.02×10^6 tons) in 1975 at 47 plants. More than half of the total production occurred in Ohio and Pennsylvania.[34] Table 4-47 shows the 1975 production of the various types of ferroalloys.

Table 4-47. U.S. FERROALLOY PRODUCTION IN 1975[a]

	Tg	Tons
Ferro-manganese (FeMn)	0.551	607,697
Silico-manganese (SiMn)	0.202	222,772
Ferro-silicon (Fe_2Si, incl. silvery pig iron)	0.726	800,000
Ferro-chromiums (FeCr)	0.222	244,938
Other ferroalloys (FeP, FeCo, FeTi, etc.)	0.127	140,000
Total estimated production	1.828	2,015,000

[a] Obtained from Mr. Thomas Jones, U.S. Bureau of Mines, Ferroalloys Division, Washington, D.C. July 20, 1976. Gross production figures.

The 1975 lead emissions from U.S. ferroalloy production are estimated at 30 Mg (33 tons), not including fugitive emissions.

4.5.3.1 Process Description - Figure 4-46 illustrates a typical flow diagram for a ferroalloy facility.

A. Ore Handling: The ore and other raw materials are usually transported to the plant by rail and are stored. The materials are mixed, blended, and sized prior to being weighed and charged into furnaces. Fugitive dusts from these operations are approximately 5 g/kg of alloy produced (10 lb/ton).[35]

B. Smelting: Furnace operation in the smelting of ferroalloys constitutes the major pollution problem and the largest source of lead emissions. Lead is a naturally occurring trace element of variable concentrations in the raw materials.[36] Smelting is done in three types of furnaces: electric, aluminothermic, and blast furnaces, of which over 90 percent are electric submerged-arc furnaces, as shown in Figure 4-47.[37]

The basic design and operation of all ferroalloy-producing electric furnaces are essentially the same. The typical furnace is of the submerged-arc type. The charge consists of raw ore with a reducing agent, such as alumina, coal and/or coke, and slagging materials such as silica or gravel. The zone of intense heat (2200 to 2800°C, or 4000

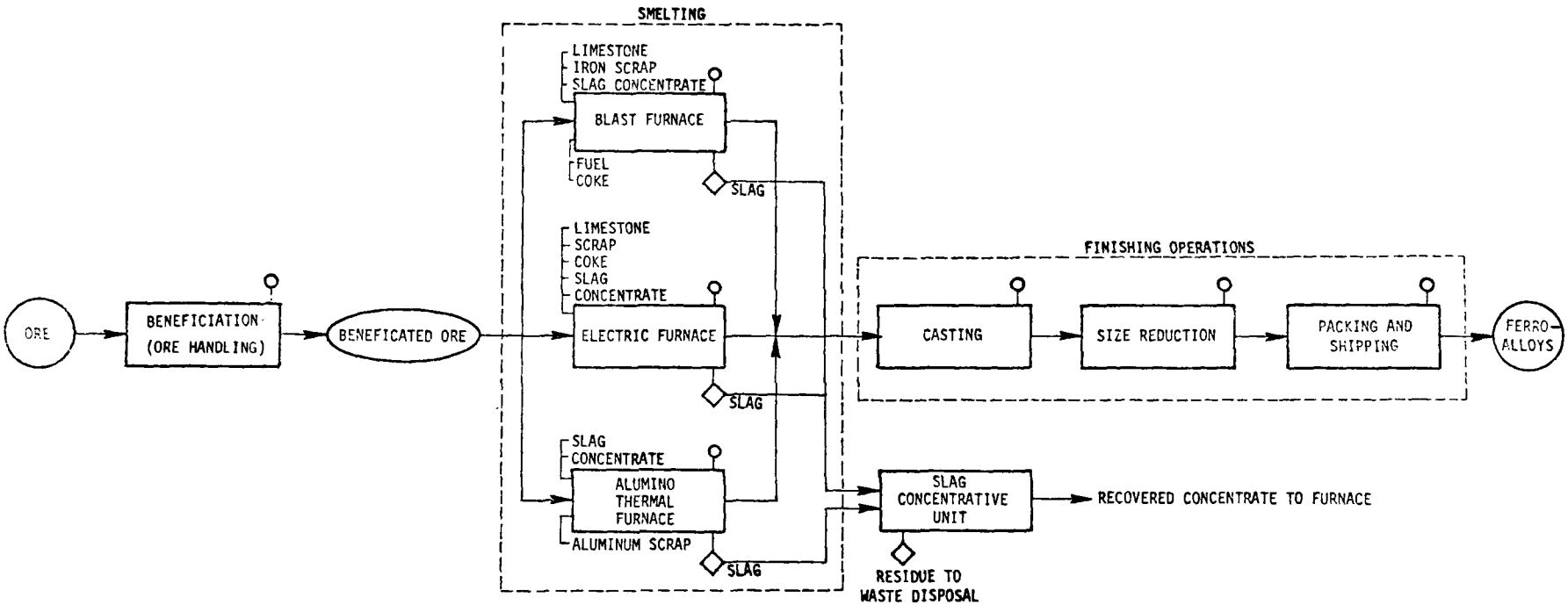

Figure 4-46. Ferroalloy production flow diagram.

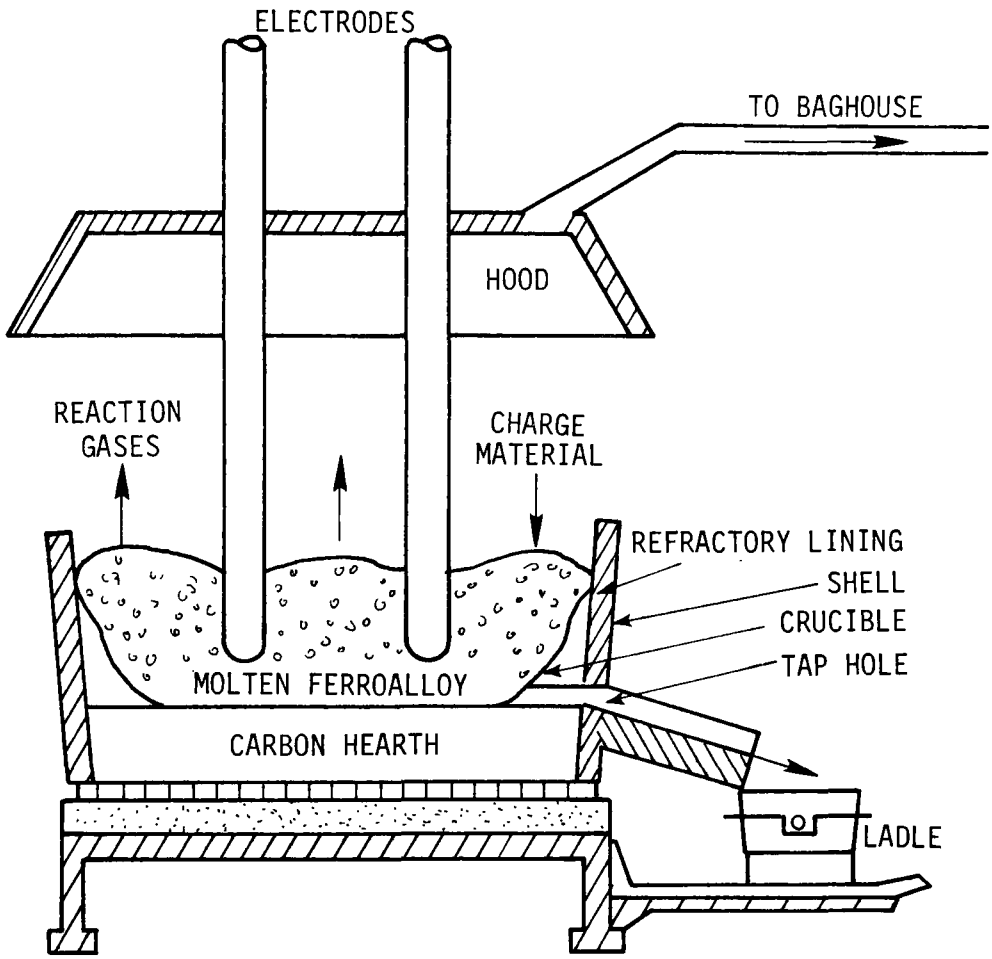

Figure 4-47. Submerged-arc furnace for ferroalloy production.

to 5000°F) around the carbon electrodes is responsible for carbon reduction of the metallic oxides present. The various impurities are trapped in the slag, and the molten ferroalloy is tapped from the bottom of the furnace and cast.[37]

The aluminothermic process, involving the co-reduction of iron oxides and other metallic oxides by aluminum, is uncommon in the United States. Charge to the furnace consists of raw ore, aluminum powder, iron scrap or mill scale, a thermal booster such as sodium chlorate, and a fluxing agent, usually lime or fluorspar. The reaction may be initiated by two methods. One involves ignition of the mix with an electrical arc from submerged electrodes. The other involves use of a small quantity of a mixture of aluminum with barium peroxide to ignite a priming batch, to which the charge is slowly added. After initial ignition occurs, the reaction is highly exothermic and the smelt is accomplished with no further addition of energy. The temperature of the reaction is controlled by adjusting the size of the charge particles and the feed rate of the charge, or by replacing some of the aluminum with a milder reductant, such as calcium carbide, silicon, or carbon. The ferroalloy is tapped from the bottom of the furnace and cast. Typical ferroalloys produced by this method include ferroboron,

ferrochromium, ferroniobium, ferromolybdenum, ferrotitanium, ferrotungsten, and ferrovanadium.[35]

Blast furnaces, like aluminothermic furnaces, are of minor importance in production of ferroalloys; only two are now in operation in the United States. The charge consists of raw ore, iron ore, coke, and limestone. The furnace is fired with fuel oil or natural gas, and usually operated at around 1430°C (2606°F), just above the slag formation temperature of 1426°C (2699°F). The ores undergo carbon reduction and the ferroalloy sinks to the bottom of the furnace, where it is tapped and cast. Temperature of the exit gases is usually between 370 and 480°C (700 and 900°F).[35]

C. Slag Processing:[35] The slag is treated by two methods: concentration and shotting. In the concentration process, the slag is dumped in water, where metal particles sink to the bottom and are recovered while the slag floats and is removed. The recovered metals and other wastes from the shipping department are recycled to the furnace charge; as high as 30 percent of the charge may be recycled material. The concentration process is generally used on ferrochromium slags. The shotting method, which involves the granulation of molten slag in water, may be used on ferromanganese slags. There are no significant atmospheric emissions.

D. Finishing Operations:[35] Hot metal from the furnace is usually cast in ingot form in various types of molds depend-

ing on the ferroalloy produced. Several kinds of mold coatings and toppings are used. After sufficient cooling and solidification, the casts are removed from the molds, graded, and placed in hot metal skip boxes, where the alloy is held for further processing. The casts are processed by hand breaking or by use of pneumatic breakers, depending on the ease with which they can be broken. At some plants the ferroalloy casts are washed free of disintegrated slag (prior to breaking) to insure cleanliness.

The broken material from the casts is passed through a crusher and screen to produce materials of uniform size. Cranes are used for feeding the crushers. If two crushers are used, material from the primary crusher is transferred to the secondary crusher by belt conveyors. The crushing and screening operations result in particulate emissions that may be easily controlled.

4.5.3.2 Emissions

A. Electric Arc Furnaces: Power requirements for the electric furnace range from 9.6 to 56 TJ/kg of product (2.4-14 MWh/ton) depending on the grade of ore and the type and size of furnace.[38] The quantity of gas generated (before dilution) is approximately proportional to the electrical energy input.[36] Exhaust rates for the production of common alloys are presented in Table 4-48.

Table 4-48. CHARACTERISTICS OF EXHAUST GAS FROM OPEN ELECTRIC FURNACES PROCESSING COMMON FERROALLOYS

Product	Volume,[36] $m^3/s \cdot MW^a$	Volume,[36] scfm/MW[a]	Emissions, g/kg product (lb/ton) particulate[36]		Emissions, g/kg product (lb/ton) lead
Silicon metal	8.0	17,000	600	1200	0.0015 (0.0031)
50% Ferrosilicon	4.3	9,200	225	450	0.15 (0.29)
75% Ferrosilicon	8.8	18,600	335	670	N.A.
90% Ferrosilicon	N.A.	N.A.	335	670	N.A.
Standard ferromanganese	2.8-6.1	6,000-13,000	168	335	0.06 (0.11)
Silicomanganese	2.4-5.7	5,000-12,000	110	220	0.29 (0.57)
Ferrochrome-silicon	1.6	3,400	415	830	0.04 (0.08)
H.C. ferrochrome	2.3	4,800	170	340	0.17 (0.34)

[a] Based on gas saturated at 38°C (100°F), and volume at 4 kPa (30 in. Hg) and 16°C (60°F).

Emissions from electric furnaces vary widely, depending mainly on the ferroalloy being produced, type and operation of furnace, and charge composition. Large quantities of gases are released during electric furnace operation. The gases are produced as a result of carbon reduction, moisture in the raw material, thermal decomposition of the raw ore, vaporization of volatile components, and intermediate reactions releasing gases as products. Approximately 70 percent by volume of the gases released is carbon monoxide. Other minor gaseous components are volatilized metallic oxides, sulfur oxides, cyanides, and phenols. In an open electric furnace, the released gases are burned and virtually all the carbon monoxide, cyanides, and phenols are destroyed. In a covered electric furnace, however, large quantities of phenols and cyanides are emitted unless the gases are either incinerated or used as fuel.[35]

Particulate and lead emission factors are given in Table 4-48 for electric furnaces producing common ferroalloys. X-ray diffraction analysis of dust fumes from furnaces processing silicon-manganese and manganese ore-lime indicated lead oxide contents of 4700 and 9800 ppm, respectively.[36] One EPA source test for SiMn production indicated an average lead content of 520 ppm.[40] Based on a particulate emission factor of 110 g/kg product (220 lb/ton),[2] and an average of 2610 ppm lead, a lead emission factor of 0.29 g/kg (0.57 lb/ton) was determined for SiMn production

in electric furnaces. Because there is no particulate emission factor for manganese-lime production, no lead emission factor can be developed.

An EPA test on a furnace producing silicon metal showed a lead content of only 2.6 ppm in the uncontrolled particulate emission,[41] which yields a lead emission factor of 1.5 mg/kg Si metal (0.0031 lb/ton) produced in an electric furnace.

The average lead content of particulates from ferromanganese electric and blast furnaces is reported to be 200 ppm.[42,43] One EPA source test indicated a lead content of 430 ppm.[40] Combined with an EPA particulate emission factor of 168 g/kg FeMn (335 lb/ton), a lead emission factor of 0.0375 g/kg (0.075 lb/ton) was developed for the electric furnace, based on an average lead content of 315 ppm.

EPA tests on 50 percent FeSi production indicated a lead content of particulate emissions to be 650 ppm; for high carbon FeCr production, 1000 ppm; and for SiFeCr production, 1000 ppm.[40] Emission factors for particulate and lead are shown in Table 4-48. Measured at the furnace outlet, exhaust gas temperatures are 590 to 700°C (1100-1300°F) for a closed furnace and 200 to 260°C (400-500°F) for an open furnace, grain loadings are 11.4 to 68.7 g/m^3 and 0.23 to 0.46 g/m^3 (5-30 gr/scf and 0.1-0.2 gr/scf), respectively.[16]

B. Aluminothermic Furnaces: As with electric furnaces, emissions from aluminothermic furnaces vary widely in type and quantity, depending upon the ferroalloy and the physical characteristics of the charge. Large amounts of gases are released, consisting of volatile metallics, water vapor, carbon monoxide, and other gases absorbed in the charge materials. Particulate emissions are substantial because of the fineness of the charged materials and the violence of the reaction. Emissions are similar to those of the electric furnace. The composition of the particulates emitted varies widely with different ore compositions; emissions consist primarily of oxides of the different charging materials.[35]

C. Blast Furnace: Since the basis of operation of the blast furnace is carbon reduction, the major constituent of the gases emitted is carbon monoxide. Other gaseous components are volatilized metallics, sulfur oxides, and various organics. Most of the combustible gases, especially CO, are burned before being emitted to the atmosphere or are used as fuel for other processes.[35]

The escaping gases may carry large quantities of dense smoke, created by the disintegration of coke and ore and by vaporization and condensation of various materials. Particulate emissions are 205 g/kg of product (410 lb/ton).[2] Approximately 20 percent of the particulates emitted consist

of particles larger than 20 μm. The remaining 80 percent consist of particles in the range of 0.1 to 1.0 μm. Production of ferrmanganese in blast furnaces can generate particulate emissions containing 0.02 percent lead.[36] With an EPA particulate emission factor of 205 g/kg (410 lb/ton),[2] the lead emission factor is 0.041 g/kg product (0.082 lb/ton).

D. Nationwide Emissions: The 1975 nationwide lead emissions from ferroalloy production cannot be accurately determined because of lack of data. Production of ferroalloys caused the emission of an estimated Mg of lead (33 tons), as shown in Table 4-49.

4.5.3.3 Control Techniques - Air pollution controls on ferroalloy furnaces consist of wet scrubbers and fabric filters. Application of electrostatic precipitators is somewhat limited.

A. Exhaust Capture: Various hooding arrangements are possible, depending on whether the furnace is open, semi-covered, or closed. The open furnace is covered with a hood, as shown in Figure 4-47, at least the diameter of the furnace shell and with an opening inlet velocity of 0.91 m/s (3 fps) minimum.[14] Ventilation air must be sufficient to completely combust carbon monoxide in the off-gas. Open furnaces, by far the most popular, generate 50 to 100 times the volume of closed furnaces.[38] Fugitive emissions escaping from open hoods are a major problem.

Table 4-49. LEAD EMISSIONS FROM FERROALLOY PRODUCTION

Product	Production[a]		Lead emission factor[b]		Lead emissions[c]	
	Tg	10^6 tons	g/kg	lb/ton	Mg	tons
FeMn	0.551	0.608	0.055	0.11	3.3	3.6
FeSi	0.730	0.800	0.15[d]	0.29[d]	15.2	16.8
SiMn	0.202	0.223	0.29	0.57	6.3	7.0
H.C.FeCr	0.152	0.168	0.17	0.34	2.8	3.1
SiFeCr	0.070	0.077	0.04	0.08	0.3	0.3
Other	0.127	0.140	0.14[e]	0.28[e]	2.0	2.2
				Total lead emissions	30	33

[a] Obtained from Mr. Thomas Jones. U.S. Bureau of Mines. Ferroalloys Division. Washington, D.C. July 20, 1976.

[b] Assuming all production is from electric arc furnaces (see Table 4-48).

[c] Assuming 89 percent collection efficiency.

[d] Based on weighted-average particulate factor of 293 g/kg (586 lb/ton).

[e] Average of all emission factors.

B. Wet Scrubbers: High-energy venturi scrubbers, flooded-disc type, are common control devices for open and semi-covered electric arc furnace. Reported efficiencies are 96 percent (0.11 g/m^3 or 0.05 gr/scf) to 99 percent (0.05 g/m^3 or 0.02 gr/scf) or higher, with pressure drops of 15 to 20 kPa (60 to 80 in. H_2O).[44] High pressure drops are required because of fine particle size and high electrostatic charge. Water rates are on the order of 0.54 to 1.07 l/m^3 (5-10 $gpm/10^3$ acfm). Power requirements are approximately 10 percent of the megawatt capacity of an open furnace[38] and considerably less for a closed furnace.

Centrifugal multistage wet scrubbers can also achieve efficiencies of 99 percent. Centrifugal devices are installed only on semicovered or closed furnaces, where exhaust volumes are much lower. Apparently blast furnace controls may attain similar efficiencies with lower pressure drop. One venturi installation on a blast furnace in England achieved 46 mg/m^3 (0.02 gr/scf) with a pressure drop of 6.0 kPa (24 in. H_2O) and a water rate of 0.67 l/m^3 (5 $gal/10^3$ ft^3).[38] Lime treatment of scrubbing water is required for furnaces processing high-sulfur ores.[44]

C. Fabric Filters: Use of fabric filters on ferroalloy furnaces is also quite common. Mechanical precleaning is desirable to prevent spark carryover. Radiant or dilution

cooling is required to reduce temperatures from 649°C (1200°F) to 121 to 149°C (250-300°F). Adiabatic cooling (by water sprays) is not recommended.[44]

Reverse-air or mechanical shaking may be designed for filtering velocities of 0.6 to 1.0 cm/s (1.2-2.0 fpm). Pulse-jet cleaning may be utilized at a higher filtering velocity of 4.5 cm/s (9 fpm). Pressure drops of 2.5 to 4.5 kPa (10-18 in. H_2O) can be expected because of the very fine particle size and electrostatic characteristics of the dust. Cloth material may be woven or felted; specific materials are determined by system design.[38]

An open 36 MW nominal capacity electric submerged arc furnace producing 75 percent ferrosilicon was tested. The data are shown in Table 4-50. The are pollution control system consists of a hood, settling chamber, and closed pressure bag filter with three stacks. Tested by EPA using Method 5 except that the probe and filter were not heated. Sampling was performed on one stack only, and air flows were measured on the other two stacks. Total emissions were calculated as the product of particulate concentrations as determined on one stack and total air flow to the baghouse. The results indicate the typical performance expected by fabric filters on electric arc furnaces. Properly designed fabric filters, ESP's, and venturi scrubbers can consistently achieve particulate emissions of 0.5 to 0.9 kg/MWh (1.0 to 2.0 lb/MWhr).[38]

Table 4-50. TEST RESULTS ON AN ELECTRIC ARC FURNACE EQUIPPED WITH FABRIC FILTER[38]

Test time-minutes	130
Average power input-megawatts	22.3
Stack effluent	
Flow rate m^3/s (dscfm)	74.5 (158,000)
Temperature, °C (°F)	193 (379)
Water vapor - vol. %	1.9
CO_2 - vol. % dry	1.7
O_2 - vol. % dry	19.8
CO - vol. % dry	0.0
N_2 and other gases - vol. % dry	78.5
Visible emissions at control system discharge - % opacity	≤15
Particulate emissions	
g/m^3 (std) (gr/dscf)	0.017 (0.02691)
g/m^3 (gr/acf)	0.007 (0.01682)
kg/hr (lb/hr)	16.4 (35.98)
kg/GJ (lb/Mw-hr)	2.63 (1.61)

D. Electrostatic Precipitators: ESP's are installed to a limited extent on open electric arc furnaces producing silicon, ferrosilicon, ferrochrome-silicon, and silicomanganese. At gas temperatures below 260°C (500°F) the resistivity of ferroalloy dusts exceed the 10^{10} ohm-cm resistivity limit for practical electrical precipitation. Gas conditioning with water, steam, or ammonia would lower resistivity.[44]

4.5.3.4 Control Costs - A 30 MW electric submerged-arc ferroalloy furnace producing 6.35 Mg/h (7.0 tph) of 50 percent FeSi is selected as the model plant to determine control costs. The open furnace exhausts 224 m^3/s at 230°C (474,000 acfm at 450°F) to a cyclone recovery system. The precleaned gas stream contains 290 kg/h (630 lb/hr) of particulate matter, assuming 80 percent efficient cyclones. Lead content of the particulate is not known. The gases enter a shaker-type fabric filter designed to handle 200 m^3/s at 177°C (422,000 acfm at 350°F) at a filter velocity of 0.8 cm/s (1.6 fpm). A 3000-hp fan system provides adequate suction at a system pressure drop of 6.3 kPa (25 in. W.G.). This control technique will reduce particulate emissions to below the 6.8 kg/h (15 lb/hr) average state limitation, by maintaining over 99 percent efficiency.

Capital costs for the above control system are estimated at $6.36 million, including cyclones, fabric filter, fan system, and ductwork.[a]

Annualized costs are estimated at $2.43 million including utilities, maintenance, labor, overhead, and fixed costs (with capital recovery). Most of the collected solids are recycled through the process; however, the recovery credit is not included in the annual costs. Annual operating time is assumed at 8000 hours and annual labor is estimated at 6000 hours.

[a] See Section 2.9 and Appendix B for discussion of cost analyses Detailed cost studies are available from EPA upon request.

The capital and annualized costs are expressed below in terms of exhaust volume and annual labor hours:

S.I. units

$$\text{Capital, \$} = 2.47 \times 10^5 V^{0.6}$$

$$\text{Annualized, \$} = 2895V + 64{,}800V^{0.6} + 19.6H$$

$V = m^3/s$ at 230°C
H = annual labor hours

$75 < V < 670$
range

English units

$$\text{Capital, \$} = 2500\ Q^{0.6}$$

$$\text{Annualized, \$} = 1.37Q + 655Q^{0.6} + 19.6H$$

Q = acfm at 450°F
H = annual labor hours

$1.6 \times 10^5 < Q < 1.4 \times 10^6$
range

4.5.3.5 Impacts

A. Emission Reduction

Particulate emission reduction achieved by employing emission control systems on electric arc furnaces range from 170 to 600 kg/Mg (340 to 1200 lb/ton) of product (see Table 4-48). Lead content of emissions from the production of ferroalloys can range from 100 to 10,000 ppm.

B. Energy Impact

The power requirements for the 30 MW model furnace producing 6.35 Mg/h (7.0 tph) of 50 percent FeSi are 15 GJ/Mg (15 MM Btu/ton) of product. The venturi scrubbing system operating at 6.3 kPa (25 in. WG) pressure drop, requires 1.1 GJ/Mg product (1.1 MM Btu/ton), a 7 percent increase in energy demand. The total energy requirements to produce ferroalloys is not available.

C. Wastewater Impact

The amount of wastewater generated by the production of ferroalloys ranges from 0.7 to 2.6 m^3/Mg product (3000 to 11,000 gal/ton) with wet scrubber controls.[32] The scrubber water discharge is estimated at 0.7 m^3/Mg (300 gal/ton).

D. Solid Waste Impact

No data relative to solid waste production is available for ferroalloy plants. Emission control systems will generate 170 to 600 kg/Mg (340 to 1200 lb/ton) depending on the product. Most solid wastes can be recycled to the furnace and therefore, there will be no significant increase in solid waste.

4.5.4 References for Section 4.5

1. Communication with Mr. Don Dussy. U. S. Bureau of Mines. Washington, D. C. July 12, 1976.

2. Compilation of Air Pollutant Emission Factors. 2nd Edition. U. S. Environmental Protection Agency. Research Triangle Park, N. C. Publication AP-42. February 1976.

3. Kalika, P. et al. Measurement of Fugitive Emissions. The Research Corporation of New England. Presented at the 1975 APCA Mtg. Boston, Massachusetts. Paper No. 75-253. June 1975.

4. Weisburg, M. I. Field Operations and Enforcement Manual for Air Pollution Control. Vol. III. Pacific Environmental Services, Inc. Santa Monica, California. For U. S. Environmental Protection Agency. EPA 70-122. August 1972.

5. Danielson, J. A. (ed). Air Pollution Engineering Manual. Second Edition. Air Pollution Control District of Los Angeles. For U. S. EPA. Research Triangle Park, N. C. May 1973. 987 p.

6. Systems Analysis of Emissions and Emissions Control in the Iron Foundry Industry. A. T. Kearney and Co., Inc. Chicago, Illinois. For U. S. Environmental Protection Agency. Division of Process Control Engineering. Contact No. CPA 22-69-106. February 1971.

7. Economic Impact of Air Pollution Controls on Gray Iron Foundry Industry. U. S. Dept. HEW. National Air Pollution Control Association. Raleigh, N. C. November 1970. 124 p.

8. Davis, W. E. Emission study of Industrial Sources of Lead Pollutants. 1970. W. E. Davis and Associates. Leawood, Kansas. U. S. Environmental Protection Agency. EPA Contract No. 68-02-0271. April 1973. 123 p.

9. Kistler, J. Two Modern Methods for Abating Air Pollution in Foundries and Iron and Steel Works. Giesserei Dusseldorf. 43 (13): 333-340. June 1956. Text in German.

10. Drake, J. F. et al. Iron Age. 163 (12). 1949. pp. 88-92.

11. Control Program Guideline for Industrial Process Fugitive Particulate Emissions. Preliminary Draft. PEDCo-Environmental Specialists, Inc. Cincinnati, Ohio. EPA Contract 68-02-1375. Task No. 33. December 10, 1976.

12. National Emission Data System (NEDS). U. S. Environmental Protection Agency. Research Triangle Park, N. C. Updated May 1975.

13. Exhaust Gases from Combustion and Industrial Processes. Engineering Sciences, Inc. Washington, D. C. For U. S. Environmental Protection Agency. Office of Air Programs. Durham, N. C. Contract No. EHSD71-36. October 2, 1971.

14. Billings, C. E. (ed). Fabric Filter Manual. The McIlvaine Company. Northbrook, Illinois. November 1975.

15. Nichols, G. B. (ed.) Electrostatic Precipitator Manual. The McIlvaine Company. Northbrook, Illinois. February 1976.

16. The McIlvaine Scrubber Manual. The McIlvaine Company Northbrook, Illinois. 1974.

17. Hardinson, L. C. and H. R. Herrington. Study of Technical and Cost Information for Gas Cleaning Equipment in the Lime and Secondary Non-ferrous Metallurgical Industries. Industrial Gas Cleaning Institute. Rye, New York. For U. S. Environmental Protection Agency. Research Triangle Park, North Carolina. Contract EPA 70-150. December 31, 1970. 293 p.

18. Communication with Mr. H. T. Reno. Iron and Steel Branch Chief. Bureau of Mines. Washington, D. C. October 12, 1976.

19. Varga, J. Jr., and H. W. Lownie. Final Technological Report on A Systems Analysis Study of the Integrated Iron and Steel Industry. Battelle Memorial Institute, Columbus, Ohio. May 1969.

20. Katari, V. S. and Gerstle, R. W., Iron and Steel Industry, PEDCo-Environmental Specialists, Inc., Contract No. 68-02-1321, Task No. 26, December 1975.

21. The Making, Shaping and Treating of Steel, Ninth Edition. McGannon, H. E. (ed.) Pittsburgh, Pennsylvania, U. S. Steel Company, 1971.

22. Iron and Steel Mills. In: Compilation of Air Pollution Emission Factors. Environmental Protection Agency. Contract Number CPA-22-69-119. April 1973. p. 7.5-4 and 7.5-5.

23. Yost, K. J. et al. Purdue University. Flow of Cadmium and Trace Metals. Volume I. National Science Foundation. Project No. PB-229478. June 30, 1973.

24. Metallurgical Coke Manufacturing. In: Compilation of Air Pollutant Emission Factors. Environmental Protection Agency, Research Triangle Park, N. C. Contract Number CPA-22-69-119. April 1973. p. 7.2-2.

25. Jacko, R. B., Neuendorf, D. W., and Blandford, J. R., The By-Product Coke Oven Pushing Operation: Total and Trace Metal Particualte Emissions, Purdue University, #76-12.2 June 27, 1976 presentation.

26. Weekly Coal Report, No. 3056, Mineral Industry Surveys, U. S. Department of the Interior.

27. Abernathy, R. F., Peterson, M. J., and Gibson, F. H., Spectrochemical Analysis of Coal Ash for Trace Elements, Bureau of Mines, RI7281, July 1969.

28. Barnard, P. E. et al. Recycling of Steelmaking Dusts, Bureau of Mines Solid Waste Program, Technical Progress Report - 52, Feb. 1972.

29. Background Information for the Development of New Source Performance Standards for Iron and Steel Industry. U. S. Environmental Protection Agency, Research Triangle Park, N. C.

30. Project Independence. Energy Conservation in the Manufacturing Sector. 1954-1990. Prepared by Interagency Task Force on Energy Conservation. Federal Energy Administration. Volume 3. U.S. GPO. Washington, D.C. November 1974.

31. Mantell, C.L. Solid Wastes. Origin, Collection, Processing and Disposal. John Wiley and Sons, New York, New York. 1975.

32. Sittig, M. Environmental Sources and Emissions Handbook. Noyes Data Corporation. Park Ridge, New Jersey. 1975.

33. Lund, H.E. Industrial Pollution Control Handbook. McGraw-Hill Book Co., New York, New York. 1971. p. 10-1.

34. Matthews, N. A. Ferroalloys, Preprint from the 1974 Bureau of Mines Mineral Yearbook. U. S. Department of Interior. Bureau of Mines. Washington, D. C. 1974.

35. Katari, V. S. Trace Pollutant Emissions from the Processing of Metallic Ores. PEDCo-Environmental Specialists, Inc. Cincinnati, Ohio. For U. S. Environmental Protection Agency. Contract No. 6802-1321. Task 4. 1974.

36. Vandegrift, A. E. et al. Particulate Pollutant System Study - Mass Emissions. Volumes 1, 2, and 3. U. S. Environmental Protection Agency. Durham, N. C. PB-203-128, PB-203-522 and PB-203-521. May 1971. 500 pp.

37. Sansom, R. L. Development Document for Proposed Effluent Limitations, Guidelines and New Source Performance Standards for the Smelter and Slag Processing Segment of the Ferroalloy Manufacturing Point Source Category. Environmental Protection Agency, Contract No. 440/1-73-008, August 1973.

38. Background Information for the Development of New Source Performance Standards for Electric-Submerged Arc Furnaces for Production of Ferroalloys. U. S. Environmental Protection Agency, Research Triangle Park, N. C. EPA-450/2-74-018. May 1974.

39. Kertcher, L. F., and Linsky, B. Economics of Coke Oven Charging Controls. JAPCA, 24(8). August 1974. p. 765.

40. Dealy, J.O. and A.M. Killin. Engineering and Cost Study of the Ferroalloy Industry, Appendix E. U.S. Environmental Protection Agency. Research Triangle Park, N.C. EPA-450/2-74-008.

41. EPA Test No. 72-PC-02. Emission Measurement Branch. Environmental Protection Agency. Research Triangle Park, North Carolina. 1972

42. Atmospheric Lead Emissions Ferroalloy Production. Statement by Ferroalloys Association to National Air Pollution Control Techniques Advisory Committee Meeting. March 2, 1977.

43. Environmental Protection Agency. The Ferroalloys Association Cooperative Study. Air Pollution Control Engineering and Cost Study of the Ferroalloy Industry. EPA-450/2-74-008. May 1974.

44. Emissions, Effluents, and Control Practices for Stationary Particulate Pollution Sources. Midwest Research Institute. Kansas City, Missouri. For National Air Pollution Control Association. Cincinnati, Ohio. Contract No. CPA 22-67-104. November 1, 1970. 607 pp.

4.6 LEAD OXIDES AND PIGMENTS

Lead oxide is used primarily in the manufacture of lead-acid storage batteries, but is also useful as a pigment in paints and ceramic glazes. The lead oxides include litharge (PbO), lead dioxide (PbO_2), and red lead (Pb_3O_4). Black oxide, the most widely used form of lead oxide, is merely a mixture of litharge and finely divided metallic lead.[1] Red lead is the major lead pigment. Other lead pigments include white lead, lead chromates, and leaded zinc oxides.

Of nearly 431 Gg of lead oxide and pigments (475,000 tons) produced in the United States in 1975, approximately 70 percent was used in storage batteries as black oxide.[2] It is estimated that 112 Mg of lead (124 tons) was emitted into the atmosphere by the manufacture of lead oxides and pigments in 1975,[3,4] not including fugitive emissions.

4.6.1 Process Description

4.6.1.1 Lead Oxides

A. Lead Monoxide: Most lead oxides and many of the major lead pigments are derived from lead monoxide (PbO), in a form called litharge. There are four principal processes for producing high-grade litharge:

(1) Metallic lead is partially oxidized and milled to a powder, which is charged into a reverberatory furnace at about 590°C (1,100°F) to complete the oxidation to ordinary "chemical litharge".

(2) Pig lead is oxidized and stirred in a reverberatory furnace or rotary kiln to form lead monoxide.

(3) Molten lead is run into a cupelling furnace held at about 1020°C (1,800°F), and molten litharge is produced.

(4) Molten lead at about 510°C (950°F) is atomized into a flame where it burns vigorously, producing "sublimed" or "fumed" litharge.[5]

In all cases, the product must be cooled quickly to below 300°C (570°F) to avoid formation of red lead.[5]

B. Black Oxides: Black oxide contains 60 to 80 percent litharge, the remainder being finely divided metallic lead. It is used exclusively in the manufacture of lead-acid storage batteries.[5] Black oxide is usually produced in the same furnace in which the litharge is produced by either the ball mill process or the Barton process. In both processes, the oxidation reaction is as follows:

$$2\ Pb + O_2 \rightarrow 2\ PbO$$

The ball mill process is shown in Figure 4-48. In this process, heat generated by tumbling solid lead ingots in a mill is used to initiate oxidation. The amount of air passing through the mill, the temperature of the charge and the weight of the charge are controlled to produce the desired ratio of lead oxide to finely divided metallic lead. Centrifugal mills and/or cyclones are used to collect large-sized particles, whereas the fine-particles are collected with baghouses.

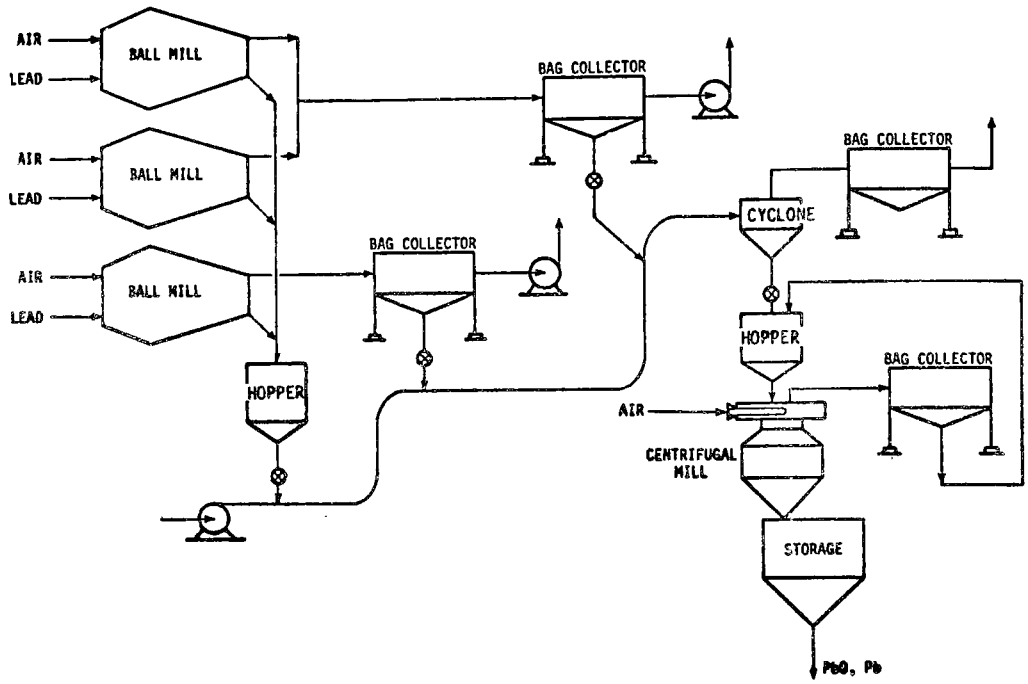

Figure 4-48. Ball mill process for lead oxide manufacture.

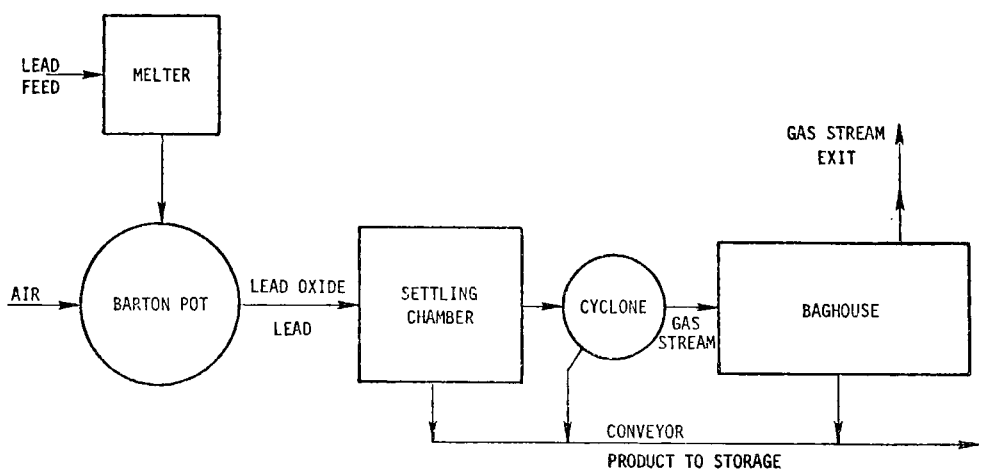

Figure 4-49. Barton pot process for lead oxide manufacture.[8]

In the Barton process, as shown in Figure 4-49, molten lead is fed into a kettle and rapidly stirred while air is drawn through the kettle to oxidize the lead.[6] The typical product recovery system consists of a settling chamber, cyclone, and fabric filter.

C. Lead Dioxide: Lead dioxide is a vigorous oxidizing agent used in a number of chemical process industries. It decomposes to lower oxides rather easily, releasing oxygen. It is commercially produced either by the treatment of an alkaline red lead slurry with chlorine, or by anodic oxidation of solutions of lead salts. The amount of lead dioxide produced is insignificant and of no commercial importance.[7]

4.6.1.2 Lead Pigments

A. Red Lead: Red lead, also called minium, is used principally in ferrous metal protective paints. The manufacture of red lead begins by charging litharge into a reverberatory furnace held at 480 to 510°C (900 - 950°F). The process consists of oxidation until a specified amount of lead monoxide is converted to Pb_3O_4. The 85 percent grade red lead is made in about 24 hours under these conditions.[7] A typical red lead manufacturing plant will produce 27 Mg (30 tons) of red lead per day.

B. White Lead: The commercial varieties of white lead include basic carbonate white lead, basic sulfate white

lead, and basic lead silicate. Manufacture of basic carbonate white lead is based on the reaction of litharge with acetic acid or acetate ions. The product of this reaction is then reacted with carbon dioxide to form lead carbonate. White leads other than carbonates are made either by chemical or fuming processes. The chemical process is like that described above except that other mineral dioxides are used in place of carbon dioxide. The fuming process differs, however, in that the product is collected in a baghouse rather than by wet slurry filtration. Consequently, dryers are not needed for these products.[4] Only about 3.1 Gg of white lead (3400 tons) was produced in 1975.[2]

C. Lead Chromate: Chromate pigments are generally manufactured by precipitation or calcination. A commonly used process is the reaction of lead nitrate solution with sodium chromate solution:

$$Pb(NO_3)_2 + Na_2(CrO_4) = PbCrO_4 + 2NaNO_3$$

The lead nitrate solution can be made using either lead monoxide or by reacting molten lead with nitric acid.

D. Leaded Zinc Oxides: Leaded zinc oxices are used almost entirely as white pigments for exterior oil-base paints. Leaded zinc oxides are produced either by smelting and cofuming combinations of zinc and lead sulfide ores or by mechanically blending separately prepared fractions of zinc oxide and basic lead sulfate. The first process

involves heating the two materials to produce a fume, which is cooled and collected in baghouses. Only one company now manufacturers leaded zinc oxides.

4.6.2 Emissions

4.6.2.1 Lead Oxides - The emission characteristics of the ball mill and Barton processes, summarized in Table 4-51 are typical of emissions from the manufacture of litharge, black oxide, and lead dioxide. Based on an average lead emission rate of 0.22 g/kg product (0.44 lb/ton) and a production rate of 454 Gg of litharge and black oxide (500,000 tons)[2] an estimated 100 Mg of lead (110 tons) was emitted into the atmosphere by lead oxide production facilities in 1975.

4.6.2.2 Lead Pigments

A. Red Lead: Collection of dust and fume emissions from the production of red lead is an economic necessity. Consequently, particulate emissions are small. Particulate emissions after baghouse collectors are about 0.5 g/kg product (1.0 lb/ton).[4] Since only lead monoxide and oxygen go into the production of red lead, about 90 percent of the particulate emissions is assumed to be lead. Approximately 17.6 Gg (19,400 tons) of red lead was produced in 1975,[2] resulting in the emission of 7.9 Mg of lead (8.7 tons) into the atmosphere.

Table 4-51. CHARACTERISTICS OF UNCONTROLLED EXHAUST GAS FROM LEAD OXIDE BALL MILL AND BARTON POT PROCESSES

Parameters	Standard international units	English units	References
Gas flow rate	1.2 $m^3/s \cdot Mg \cdot h^{-1}$ Pb charged	2300 acfm/tph Pb charged	2
Temperature	120°C	250°F	2
Grain loading	7-11 g/m^3	3-5 gr/scf	
Particle size distribution,[a] wt %	0 to 1 μm - 4% 1 to 2 μm - 11% 2 to 3 μm - 23%	0 to 1 μm - 4% 1 to 2 μm - 11% 2 to 3 μm - 23%	8
Lead emission factor[b]	0.22 g/kg product	0.44 lb/ton product	8

[a] Baghouse catch.

[b] Emissions are after baghouse. Baghouse considered process equipment.

B. White Lead: Data on emissions from the production of white lead pigments are not available. Because of health and safety regulations, however, it is believed that white lead pigment production emits about 0.28 g Pb/kg product (0.55 lb/ton).[4] The production of 3.1 Gg of white lead (3400 tons)[2] resulted in total emissions of less than 0.9 Mg of lead (1 ton) during 1975.

C. Lead Chromates: A chrome pigment facility producing 54 Mg of pigments per day (60 tons) emits approximately 65 Mg Pb/kg of chrome pigment produced (0.13 lb/ton).[4] The emissions from the dryer exhaust scrubbers account for over 50 percent of the total lead emitted in the lead chromate production. Hence, the 1975 lead emissions are estimated at approximately 3.0 Mg (3.3 tons) based on 45.4 Gg of chrome pigment (50,000 tons) produced.[2]

For occupational health reasons, OSHA dust control requirements may increase the lead chromate emissions with a larger volume of lower lead concentration in the exhaust. Many of the lead chromate plants are old and were built before extensive emission controls were necessary.

D. Leaded Zinc Oxides: Data on emissions are not available. In view of the limited production capacity of this pigment, lead emissions are believed to be insignificant.

4.6.3 Control Techniques

Fabric filters, often preceded by dry cyclones or settling chambers, are the almost universal choice for

collecting lead oxides and pigments. Several of the manufacturers incorporate filters as an integral part of the process; hence, the emission factor is based on lead emissions from the filter. In addition, the pigment manufacturing processes are generally well-controlled for economic and health reasons since the value of the recovered products often exceeds the cost of collecting them.

Fabric filters provide the most economical means for high-efficiency emission control.[9] Cooling of the exhaust gases during production of the lead oxides and pigments is often accomplished with dry cyclones and settling equipment which are used to capture larger particles, ahead of the filter. Dacron bags, which will operate at temperatures up to 150°C (300°F), have been used effectively in lead oxide processes. Shaker-type baghouse filters are used primarily, generally requiring filter velocities as low as 0.5 to 1.3 cm/s (1 to 2.5 fpm)[6]. Collection efficiencies of baghouse filters exceed 99 percent.

In some cases, a fabric filter may not be appropriate and a scrubber is used resulting in higher emissions. Scrubbers are required on the dryer exhaust because of the dryer's moist steam-laden air which would clog a bag filter. The scrubber efficiencies range from 70 to 95 percent effective.

Table 4-52 indicates the performance of fabric filter systems on lead oxide mills.

Table 4-52. PERFORMANCE TEST RESULTS ON FABRIC FILTER SYSTEMS SERVING LEAD OXIDE FACILITIES[8]

	Barton pot	Hammermill furnace	Hammermill furnace	Loading operations	Auxilary furnace operations	Auxilary furnace operations
Control system	Settling chamber/ cyclone/fabric filter	Cyclone/ fabric filter	Cyclone/ fabric filter	Fabric filter	Fabric filter	Fabric filter
Test point	Outlet	Outlet	Inlet to filter	Outlet	Inlet	Outlet
Particulate emissions						
g/m^3	0.074-0.13	0.028	75.7	0.0067	7.55	0.0023
gr/dscf	0.032-0.056	0.012	32.9	0.0029	1.11	0.0010
gr/kg product	0.21-0.43	0.028				
lb/ton product	0.41-0.85	0.057				
Lead emissions						
g/m^3	0.055-0.11	0.018	69.7	0.0094	2.46	0.00035
gr/dscf	0.024-0.046	0.008	30.3	0.0041	1.07	0.00015
g/kg product	0.15-0.35	0.021				
lb/ton product	0.30-0.69	0.042				

4.6.3 Control Costs

A ball mill process with a throughput capacity of 1.9 Mg/h (2.1 tph) of lead, exhausts 2.1 m^3/s at 120°C (4400 acfm at 250°F) to a settling chamber, cyclone, and fabric filter. Uncontrolled lead emissions are estimated at 45 kg/h (100 lb/hr). The mechanical shaker-type fabric filter (equipped with Dacron® bags) is designed to handle 2.1 m^3/s (4400 acfm) at a filter velocity of 1 cm/s (2 fpm). The 15 hp fan system is rated at 2.1 m^3/s (4400 acfm) at a system pressure drop of 3 kPa (12 in. W.G.). This control technique can meet the average state particulate regulation of 3.2 Kg/h (7.0 lb/hr) by maintaining an efficiency of more than 99 percent.

Total capital costs for the above system are estimated at $58,000, including settling chamber, cyclone system, fabric filter, fan system, and ductwork.[a]

Total annualized costs are estimated at $32,300, including utilities, labor, maintenance, overhead, and fixed costs (with capital recovery). Annual operating and labor hours are assumed at 6000 and 750 hours, respectively. The value of the material recovered is considerably greater than the annualized costs. Assuming $0.09/kg ($0.20/lb) of lead oxide recovered, a total annual credit of $119,000 is realized. Therefore, there is a net savings for installing a fabric filter.

[a] See Section 2.9 and Appendix B for discussion of cost analyses Detailed cost studies are available from EPA upon request.

Capital and annualized costs are given below in terms of exhaust volume and annual labor hours. These cost equations do not include credit for product recovery.

S.I. units

Capital, $ = 37,400 $V^{0.6}$

Annualized, $ = 1210V + 9800 $V^{0.6}$ + 19.6H

V = m^3/s at 120°C
H = annual labor hours

$0.7 < V < 6$
range

English units

Capital, $ = 378 $Q^{0.6}$

Annualized, $ = 0.57Q + 99$Q^{0.6}$ + 19.6H

Q = acfm at 250°F
H = annual labor hours

$1500 < Q < 13,000$
range

4.6.4 Impacts

Lead oxide production is unique in that fabric filter systems are used as process equipment in order to recover the lead product. Additional control devices could be needed in certain cases to reduce lead emissions, although this appears to be an exception to the general case. Typically, therefore, no energy or environmental impacts can be directly attributed to the control of particulate or lead emissions.

4.6.5 References for Section 4.6

1. Ritchie, E.J. Lead Oxides. Largo, Florida. Independent Battery Manufacturers Association, Inc. 1974. p. 13.

2. U.S. Department of the Interior. Bureau of Mines. Washington, D.C. 1975.

3. Background Information For Support of the Development of Performance Standards for the Lead-Acid Battery Industry-Interim Report No. 2. PEDCo-Environmental Specialists, Inc. Cincinnati, Ohio for U.S. Environmental Protection Agency. EPA Contract No. 68-02-2085. December 1975. pp. 1-18-1-22, 6-7.

4. Beltz, P.R. et al. Economics of Lead Removal in Selected Industries. Battelle Columbus Laboratories, Columbus, Ohio. Environmental Protection Agency, 1973. pp. 7-42, 53-70.

5. Davis, W.E. Emissions Study of Industrial Sources of Lead Air Pollutants 1970. W.E. Davis & Associates Leawood, Kansas for U.S. Environmental Protection Agency. EPA Contract No. 68-02-0271. April 1973. p. 123.

6. Nance, J.T. and K.D. Luedtke. Lead Refining, In: Air Pollution Engineering Manual, Danielson, J.A. (ed.), Research Triangle Park, North Carolina. Environmental Protection Agency. May 1973. p. 304.

7. Thompson, A.P. Lead Compounds. In: Kirk-Othmer Encyclopedia of Chemical Technology. Standen, A. (ed.). New York City, John Wiley & Sons, Inc. 1967. p. 266-282.

8. Test No. 74-PBO-1. Emission Testing Branch. Environmental Protection Agency. Research Triangle Park, North Carolina. Contract No. 68-02-0226, Task No. 10. August 20-31, 1973.

9. Crane, G.B. Control Techniques of Lead Emissions, Draft. Environmental Protection Agency. Research Triangle Park, North Carolina. February 1971. p. 4-41.

4.7 PESTICIDES

The only pesticide containing lead is lead arsenate ($PbHAsO_4$). It was most widely used during World War II, but demand began to drop soon after the war due to competition from organic insecticides. The cancellation of pesticide regulations in 1968 and 1969, and tightened OSHA restrictions on pesticide manufacturing because of the health effects of arsenic on workers, accelerated the decline of its use in recent years. The annual production of lead arsenate from 1960 through 1972 ranged from 1.88 to 4.5 Gg (2070 to 4960 tons).[1] There were no production or imports of lead arsenate in 1975, and there were no suppliers found who dealt in more than small quantities for research purposes. It is therefore assumed that no lead emissions were generated from this source category during 1975.

Reference

1. Technical and Microeconomic Analysis of Arsenic and Its Compounds. EPA 560/6-76-016. Office of Toxic Substances. U.S. EPA. April 12, 1976.

4.8 LEAD HANDLING OPERATIONS

Lead handling operations include preparation of type metal, can soldering, and cable covering. Estimated 1975 emissions of lead from these sources is 611 Mg of lead (675 tons), representing over 8 percent of the total industrial lead emissions, not including fugitive emissions.

4.8.1 Type Metal

Lead type is used primarily in the letterpress segment of the printing industry. The lead typemaking processes are classified according to the methods of producing the final product: linotype, monotype, and stereotype. Approximately 14.74 Gg of lead (16,211 tons) was consumed by type metal processes in 1975,[1] resulting in lead emissions of about 435 Mg (480 tons).

4.8.1.1 Process Description - Figure 4-51 shows a typical material flow diagram of a type metal operation. Linotype and monotype processes produce a mold, and the stereotype process produces a plate for printing. All hot-metal typemaking processes are closed-cycle. The type is cast from a molten lead alloy and then remelted after printing. A small amount of virgin metal is added periodically to the melting pot to adjust the alloy and to fill make-up requirements. Although the validity of the information is questionable, one stereotype plant reported a loss of 58 kg (127 lb)

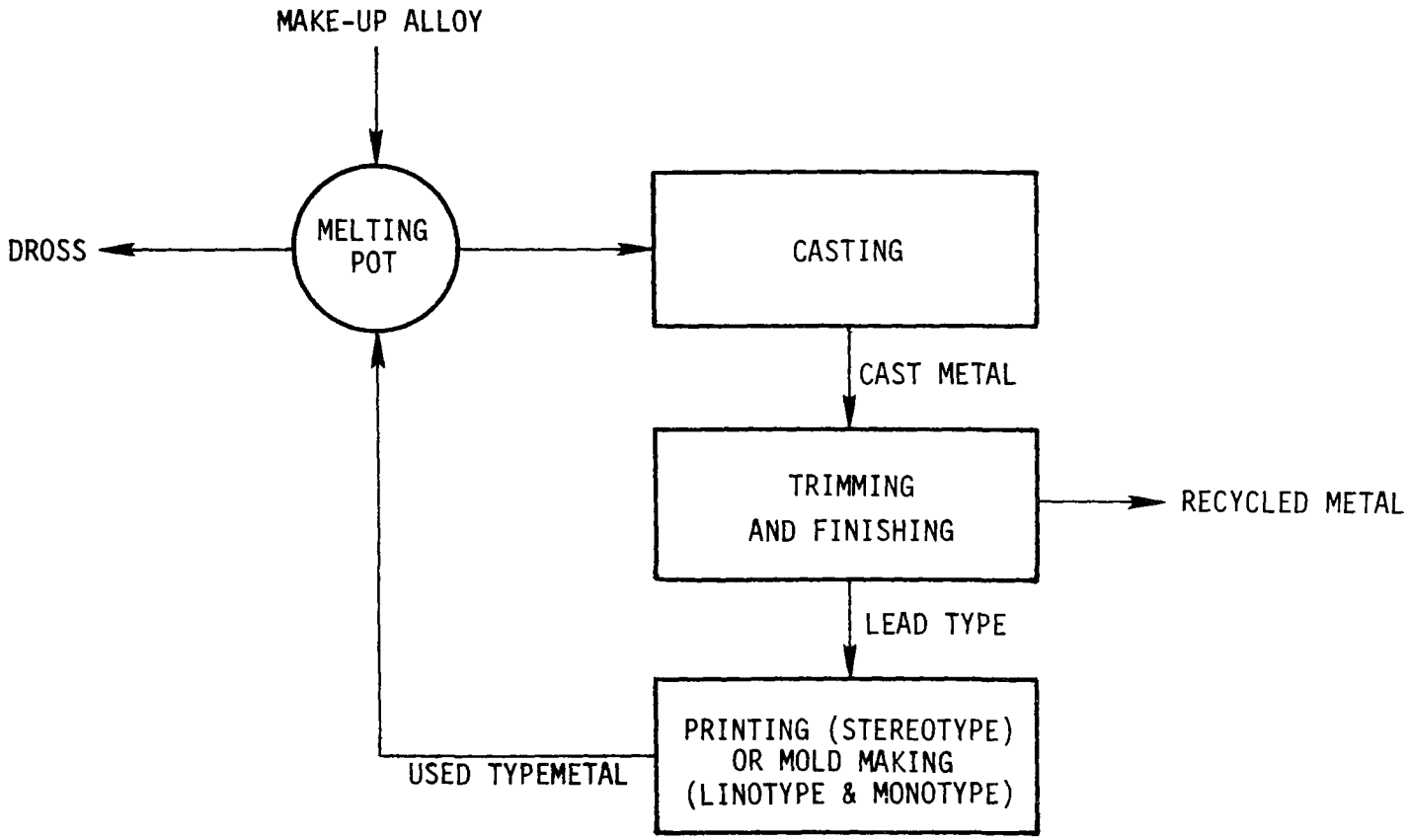

Figure 4-50. Flow diagram for type metal processes.

of metal by drossing after remelting 4.1 Mg (9,000 lb) of metal 11 times.[2] The average metal loss would then be 0.13 percent per melt.

All type metal is an alloy consisting mainly of lead with much smaller amounts of antimony and tin. Each constituent provides a desired metallurgical characteristic for a slug (a solid bar with raised letters in a line) or other form of type-casting. Lead constitutes 60 to 85 percent of the type metal because it has a low melting point. Antimony lends hardness to the alloy and minimizes contraction as the metal cools. The antimony expands as the slug solidifies, providing a clear type face. Tin gives both strength and fluidity to the type metal and provides a smooth and even surface to the slug.

4.8.1.2 Emissions - The melting pot is the major source of emissions. Melting the "dirty" metal plates containing printing ink, paper, and other impurities generates smoke, which contains hydrocarbons as well as lead particulates. Only small quantities of particulates are created by oxidation after the meltdown of lead because of the protective layer of dross on the metal surface. From limited test data,[3,4] it is estimated that 35 percent of the total emitted particulate is lead.

Transferring and pouring of molten metal at high temperature into the molds involves surface oxidation of the metal and may also produce oxidized fumes.

The trimming and finishing operations emit lead particles. Particle size is large, and the particles tend to settle out in the vicinity of the trimming saws and finishing equipment.

Lead consumption for this industry is difficult to determine. The U.S. Bureau of Mines reported the 1975 type metal consumption cited earlier, 14.74 Gg (16.2 tons). This total, however, does not include type metal sales from newspapers or other printing operations abandoning the type metal process. One study estimates consumption of 17.2 Gg of type metal (19,000 tons) in 1976.[5] On the basis of a metal recycle-to-replacement ratio of 330, the total lead recycled in the industry for 1976 would be 5.7 Tg (6.3×10^6 tons).[4]

Approximately half of the current lead type operations control lead emissions by about 80 percent; the other operations are uncontrolled.[5] Although the 1975 lead emissions from the industry are estimated at 436 Mg (481 tons), the emissions are expected to decline to less than 9 Mg of lead (10 tons) per year by 1985,[5] primarily because improved printing techniques. Based upon the values cited, the lead emission factor for this industry is 0.13 g/kg of lead processed (0.25 lb/ton).

4.8.1.3 Control Techniques - The most frequently controlled sources at hot metal printing facilities are the main melting pots and drossing areas. During drossing, hood doors are opened and pot emissions enter the plant atmosphere unless vented to a control device or to the outside. Linotype melting pots and finishing equipment do not require emission controls when they are operated properly. Emission control devices in current use are Type-N Roto-Clones^{R}, wet scrubbers, fabric filters, and electrostatic precipitators. These can be used in various combinations.

Activated carbon filtering devices were originally installed to trap hydrocarbons and prevent fires in the exhaust system ducts. Roto-Clones^{R} are also sufficient for this purpose. Within the last 5 years there has been concern about visible emissions, primarily caused by hydrocarbons, from the stacks of newspaper plants. Some plants have added controls to eliminate these visible emissions. While removing hydrocarbons, these control systems also remove some of the heavier particulates that contain lead.

4.8.2 Can Soldering

Metal can production in 1975 was estimated at 179 million base-boxes. A base-box is equivalent to 20.23 m^2 of surface area (217.8 ft^2). Fifty percent of the total can market consists of beverage cans. The beverage can market

consists of one-half seamless two-piece aluminum cans and one-half conventional steel three-piece soldered cans.[6] Therefore, 44.8 million base-boxes of nonsoldered aluminum cans and 134 million base-boxes of soldered steel cans were produced. A total of 63 Mg of lead (70 tons) was emitted to the atmosphere in 1975, assuming no emission control.

4.8.2.1 Process Description - Side seams of cans are soldered on a machine consisting of a solder-coated roll operating in a bath of molten solder, typically containing 98 percent lead. The roll revolves, bringing molten solder up to the seam of the can which is moving rapidly along a roll parallel to the axis of the solder roll. After the soldering, the excess is wiped from the joint by a rotating cloth buffer, which creates some dust.[7]

4.8.2.2 Emissions - Hoods, exhaust ducts, and cyclone collectors are used to collect the dust, but some dust escapes the system. Particles entering the system are in flake form, mostly about 1.3 cm (0.5 in.) diameter. Particles exhausted to the atmosphere are on the order of 20 microns or smaller. When using solder averaging 40 percent lead, one large manufacturer reported lead emissions to the atmosphere of 0.9 g/kg of solder consumed (1.7 lb/ton).[7]

Several emission tests indicate that lead content of the particulate emissions is 3 to 38 percent, with an average

emission factor of 0.16 Mg of lead (0.18 ton) per million base boxes.[8]

One source[10] reports an uncontrolled lead emission factor of 3.6 g/kg of lead in the product (7.1 lb/ton); another source[7] reports a factor of 1.5 g/kg of lead in the product (3.0 lb/ton). If 50 percent of the total 51.7 Gg of lead (57,000 tons)[1] used in solder applications were utilized in can manufacturing, these data would indicate an emission factor of 0.36 to 0.72 Mg of lead (0.4 to 0.8 ton) per million base-boxes of soldered cans produced.

These values indicate that the lead emission factor for can soldering operations ranges from 0.18 to 0.73 Mg (0.2 to 0.8 ton) per million base-boxes produced, with an average of 0.45 Mg (0.5 ton) per million base-boxes. At a production level of 134 million base-boxes and assuming no control,[9] the estimated lead emissions for 1975 are approximately 63 Mg (70 ton).

4.8.2.3 Control Techniques - Mechanical cyclones may be provided to collect the large flakes generated at the wiping station. Efficiencies of 75 percent or more are achieved.

Some local regulations require control of visible emissons from the solder bath. Maintaining a good flux cover is the most effective means of controlling lead emissions.

Low-energy wet collectors or fabric filters can also be installed to control lead emissions; these emissions, however, do not appear to be serious enough to warrant high-efficiency control.

4.8.3 Cable Covering

Lead cable coverings are of two types, the permanent lead sheath and the temporary lead-cured jacket. About 10 percent of the lead cable covering produced in the U.S. is on lead-sheathed cables and about 90 percent on lead cured jacketed cables. Consumption of lead by these processes in 1975 was 45.50 Gg (50,000 tons).[11] A survey of four major producers[10] indicates a throughput to consumption ratio of about 10, which suggests that about 455 Gg (500,000 tons) of lead was processed. The total lead emissions for 1975 are estimated at 113 Mg (125 tons).

4.8.3.1 Process Description - In the preparation of lead-cured jackets, an unalloyed lead cover, which was applied in the vulcanizing treatment during the manufacture of rubber-insulated cable, is stripped from the cable and remelted.

Lead coverings are applied to insulated cable by hydraulic extrusion of solid lead around the cable as shown in Figure 4-51. Molten lead is continuously fed into the press where it solidifies as it progresses through. A diagram of an extruder, or screw press, is shown in Figure 4-52.

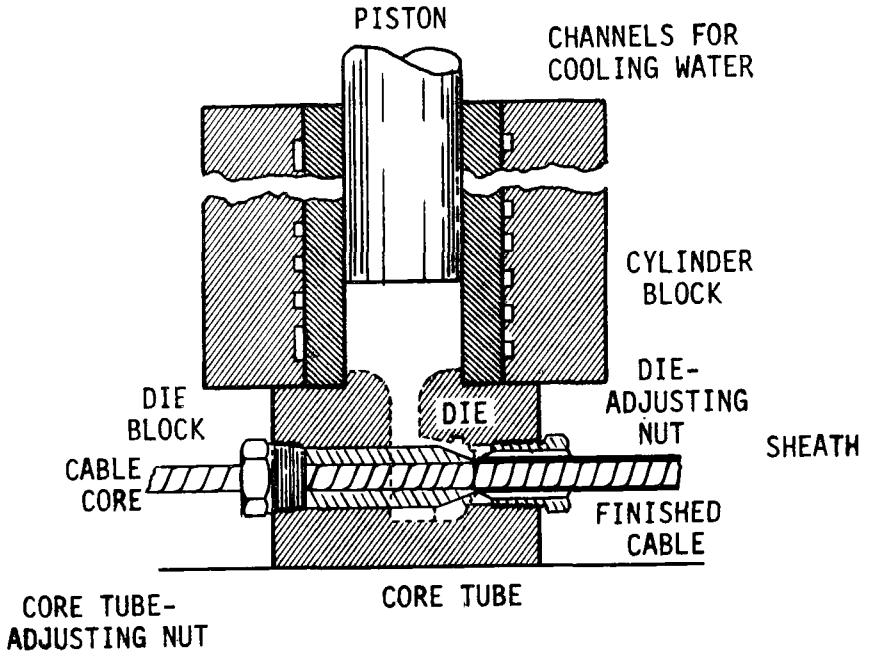

Figure 4-51. Cross section of a hydraulic extrusion press.

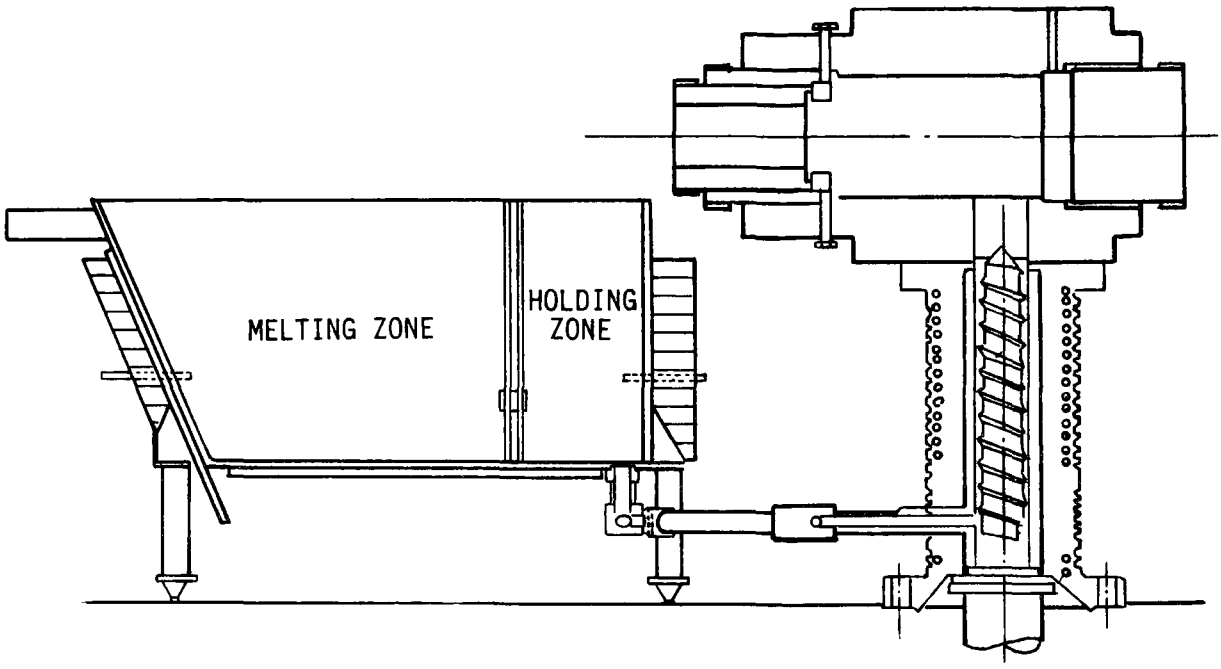

Figure 4-52. Screw-type extrusion press.[10]

4.8.3.2 Emissions - Extrusion rates for typical presses are 1.3 to 6.8 Mg/hr of lead (3,000 to 15,000 lb/hr). A lead melting kettle supplies lead to the press, which is heated either electrically or with a combustion-type burner. Vapors from these kettles are exhausted to the atmosphere. The melting kettle is the only source of atmospheric lead emissions and is generally uncontrolled.[10]

Emission data are scarce and questionable. Two EPA source tests show lead emission rates of about 25 mg/kg of lead extruded (0.05 lb/ton);[12] two manufacturers have estimated rates of 0.75 to 2.5 g/kg (1.5 to 5.0 lb/ton).[7] Assuming an emission factor of 0.25 g/kg (0.5 lb/ton) of lead extruded gives estimated 1975 lead emissions of 113 Mg (125 tons). A typical cable covering operation exhausts 1.4 m^3/s (3000 cfm) at less than 38°C (100°F). Average particle size is approximately 5 μm.[10] Lead content of the particulate emissions is about 70 to 80 percent.[7,12]

4.8.3.3 Control Techniques - Cable covering processes usually do not incorporate particulate collection devices. If control is desirable, fabric filters can be installed to attain efficiencies of 99.9 percent. A rotoclone type wet collector can attain an efficiency of 75 to 85 percent and a dry cyclone collector can reduce lead emissions by 45 percent or more.

Process modifications to minimize emissions include lowering and controlling the melt temperature, enclosing the melting unit to permit lower air flow rates, and using fluxes to provide a cover on the melt.

4.8.4 References for Section 4.8

1. U.S. Bureau of Mines. Conversation with J.P. Ryan. Washington, D.C. June 17, 1976.

2. Typesetting Machines and Type Metal. Twentieth Century Encyclopedia of Printing. Graphic Arts Publishing Company. Chicago. 1930. pp. 230-231.

3. Source Test. Detroit News. Wayne County Department of Health, Air Pollution Control Division. Detroit. 1970.

4. Source Test. San Francisco Newspaper Printing Company. San Francisco. April 13-14, 1975.

5. Atmospheric Emissions from Lead Typesetting Operations - Screening Study. Prepared by PEDCo-Environmental Specialists, Inc. for U.S. Environmental Protection Agency, Research Triangle Park, North Carolina. Contract No. 68-02-2085. 75 p.

6. U.S. Industrial Outlook 1976 with Projections to 1980. U.S. Department of Commerce. Domestic and International Business Administration. U.S. GPO. Washington, D.C. January 1976. 465 p.

7. Davis, W.E. Emission Study of Industrial Sources of Lead Air Pollutants, 1970. W.E. Davis & Associates. Leawood, Kansas. For U.S. Environmental Protection Agency. Contract No. 68-02-0271. April 1973. 123 p.

8. Confidential Test Data. PEDCo-Environmental Specialists, Inc. Cincinnati, Ohio.

9. Hopper, T.G. and W.A. Marrone. Impact of New Source Performance Standards on 1985 National Emissions from Stationary Sources. Volume 1. The Research Corporation of New England. Wethersfield, C.N. For U.S. Environmental Protection Agency. Research Triangle Park, North Carolina. Contract No. 68-02-1382. Task 3. October 24, 1975.

10. Beltz, P.R. et al. Economics of Lead Removal in Selected Industries. Battelle Columbus Laboratories. Columbus, Ohio. Prepared for the U.S. Environmental Protection Agency. Contract No. 68-02-0611. Task No. 3. August 31, 1973.

11. Private Communication with J.R. Ryan. U.S. Bureau of Mines. Washington, D.C. June 17, 1976.

12. Shea, E.P. Emissions from Cable Covering Facility. Midwest Research Institute. EPA Contract No. 68-02-0228. Task No. 31. June 1973.

4.9 MISCELLANEOUS SOURCES OF LEAD

Portland cement production, metallic lead products, and lead glass manufacture caused the emission of about 445 Mg (491 tons) of lead in 1975, not including fugitive emissions, representing 6 percent of the total industrial lead emissions. Over 180 Gg (200,000 tons) of lead was consumed by the lead glass and metallic lead products industries.[1]

4.9.1 Cement Production

Approximately 65 Tg of cement (7.2×10^7 tons) was produced in 1975 by two major methods identified as dry and wet processes. Production of Portland cement by the dry process was 35.8 Tg (3.95×10^7 tons)[1] and caused emissions of 188 Mg (207 tons) of lead. Production by the wet process was 29.5 Tg (3.25×10^7 tons)[1] and the lead emissions are estimated at 124 Mg (137 tons).

4.9.1.1 Process Description - In the dry process, the raw materials (limestone, cement rock, clay, and iron ore) are ground, crushed, blended, and then fed to a kiln to form clinker, after which gypsum is added and the final mix is ground to form Portland cement. In the wet process, water is added to the initial blend of raw materials before grinding. This material is fed into a kiln in the form of a slurry. Lead is an incidental trace element in the raw materials of both processes. The three major sources of

particulate and lead air pollutants are the kilns, dryers, and grinders.[2] Figure 4-53 depicts the flow of materials, process equipment, and emission points in a typical cement plant.

A. Kilns and Clinker Coolers: At the heart of every cement plant is the cylindrical rotary brick-lined kiln, as shown in Figure 4-54, which is the largest single source of particulate emissions. Kilns range in size from 1.8 to 7.6 m (6 to 25 feet) in diameter and from 18 to 232 m (60 to 760 feet) in length. Typically, large plants can produce 4500 Mg per day (5000 tpd) and small plants about 450 Mg per day (500 tpd) of cement. Kilns may be fired with oil, natural gas, or coal; temperatures exceed 1400°C (2600°F). In the burning process about one-third of the dry weight of the feed is lost. In the hot zone, 20 to 30 percent of the charge is converted to liquid, through which the chemical reactions proceed. Water is first evaporated in the upper part of the kiln. In the middle of the kiln, CO_2 and combined water are driven from the raw materials to form calcium silicates, aluminates, and ferrites. The lower third of the kiln is the burning zone, maintained at temperatures near 1500°C (2700°F). The clinker product appears in the form of round, marble-sized balls.[3] The product then passes through the clinker cooler.

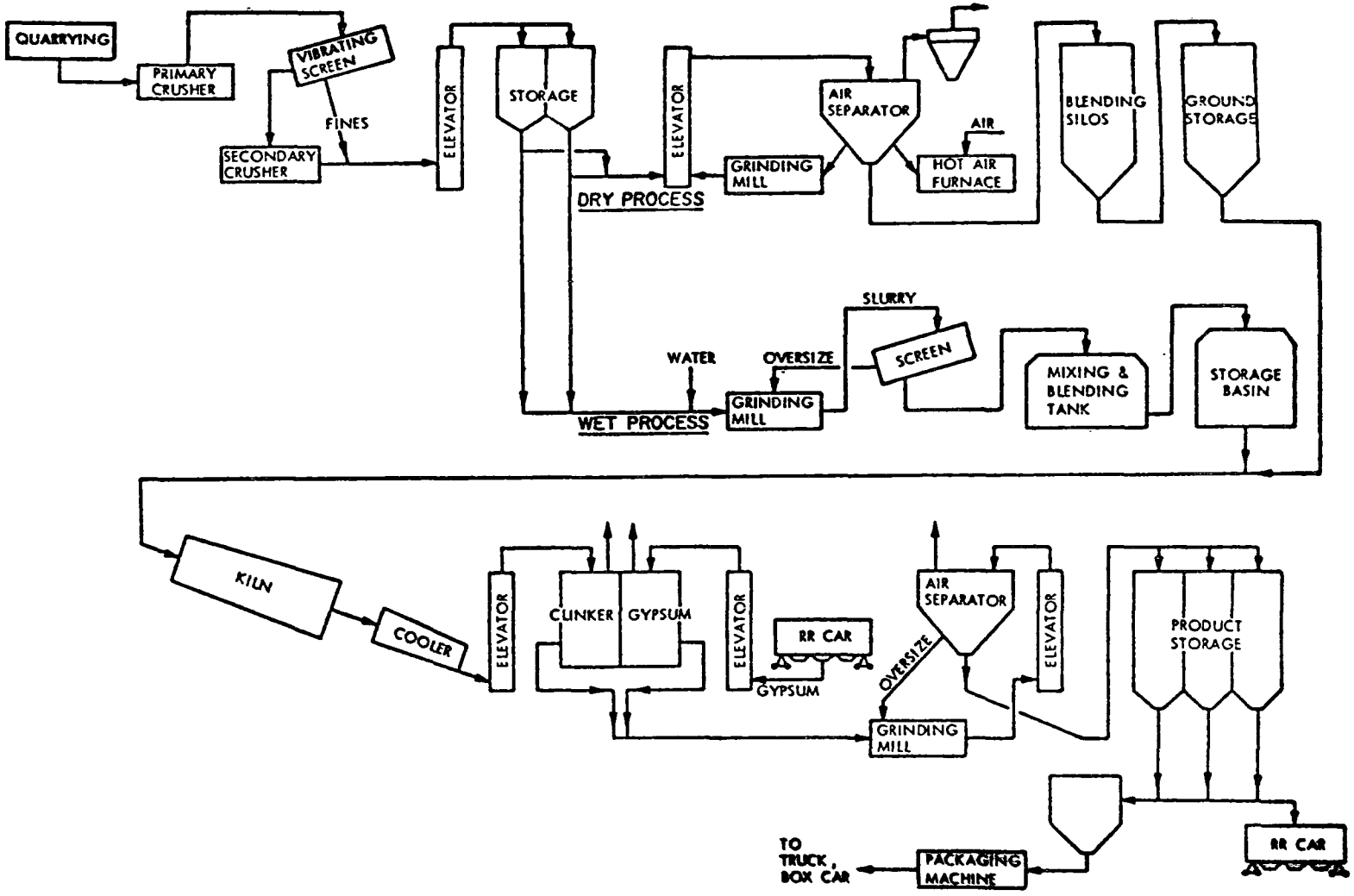

Figure 4-53. Sources of particulate emissions in cement plant.[2]

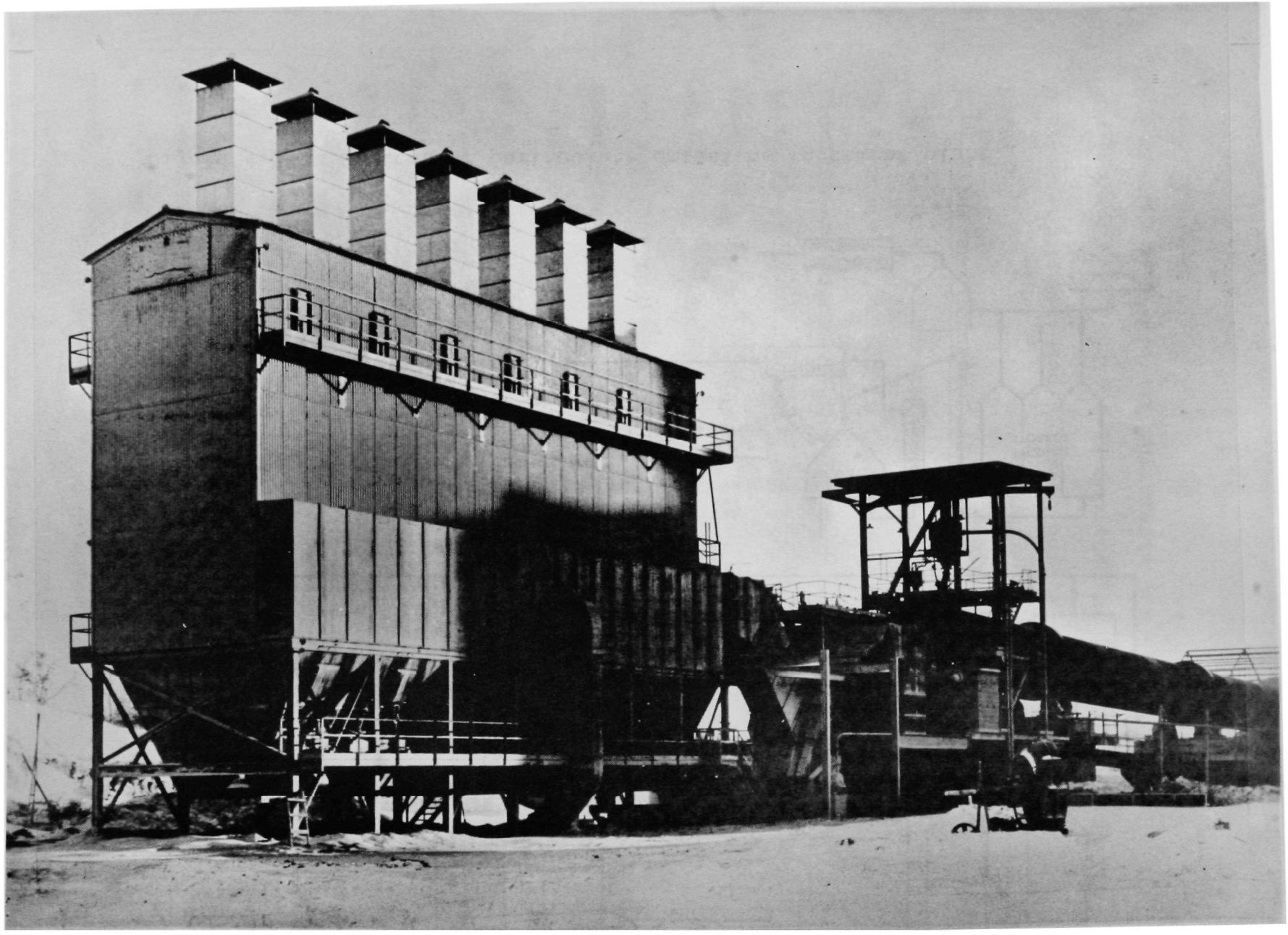

Figure 4-54. A typical rotary cement kiln and clinker cooling system with fabric filter. (Courtesy of Wheelabrator-Frye, Philadelphia, PA.)

B. Dryers and Grinders: Raw materials are initially fed into grinders and dryers prior to calcining in the kiln. Ball or rod mills are used to grind the materials to a fine size. Exhaust gas flow rates are about 780 m^3/Mg of feed (25,000 scf/ton) and exit temperatures are about 93°C (200°F).[10] After calcining, clinker cooling, and the addition of gypsum, finish grinding is usually performed in a compartment mill close-circuited with an air circulator. Following the grinding, the finished product is ready for packaging.[2]

4.9.1.2 Emissions - Particulate emission factors for the dry process are 123 g/kg (245 lb/ton) for the kiln and cooler system and 48 g/kg (96 lb/ton) for the dryers and grinders.[4] At 450 ppm lead,[6] the total plant lead emission factor is estimated at 0.08 g/kg (0.15 lb Pb/ton) cement produced. At a production rate of 35.8 Tg (3.95 x 10^7 tons)[1] and an overall control efficiency of 93 percent, the total lead emissions from the dry process in 1975 are estimated at 188 Mg (207 tons).

For the wet process, the particulate emission factors are 114 g/kg (228 lb/ton) for the kiln and cooler system and 16 g/kg (32 lb/ton) for the dryers and grinders.[4] At 450 ppm lead,[6] the total plant lead emission factor is estimated at 0.6 g/kg (0.12 lb Pb/ton) of cement produced. At a production rate of 29.5 Tg (3.25 x 10^7 tons)[1] and an overall

control efficiency of 93 percent, the total lead emissions from the wet process in 1975 are calculated to be 124 Mg (137 tons).

The above estimates compare favorably with the data given in reference 8, stating that the national particulate emissions from the dry and wet processes were 381 Gg (420,000 tons) and 292 Gg (322,000 tons), respectively, corresponding to totals of 172 Mg (190 tons) and 132 Mg (145 tons) of lead emissions, respectively.

Table 4-53 presents characteristics of exhaust gas from a kiln and cooler system. Sources of fugitive dust are screens, storage bins, packaging facilities, transfer points, elevator boots, and loading stations. These are minor sources of lead and particulate emissions and are usually controlled by fabric filters or by application of water or chemicals to suppress dust.

4.9.1.3 Control Techniques - Particulate matter is the primary air pollutant from the manufacture of Portland cement. The cement industry uses mechanical collectors, electrostatic precipitators, gravel beds, and fabric filters, or combinations thereof, depending upon the operation and exhaust gas temperatures. Although high-energy wet collectors (venturi scrubbers) are used in some plants, they are not generally used in the Portland cement industry.

Table 4-53. CHARACTERISTICS OF UNCONTROLLED EXHAUST GAS FROM PORTLAND CEMENT KILN

Parameters	Standard international units	English units	References
Gas flow rate	26 $m^3/s \cdot Gg \cdot da^{-1}$	50 acfm/tpd product	
Temperature	200-315°C	400-600°F	
Moisture content	5% vol. (dry process)	5% vol. (dry process)	2
	30% vol. (wet process)	30% vol. (wet process)	
Grain loading[a]	12-50 g/m^3	5-20 gr/scf	5
Particle size distribution	58% < 20 µm 38% < 10 µm 23% < 5 µm 3% < 1 µm	58% < 20 µm 38% < 10 µm 23% < 5 µm 3% < 1 µm	6
Lead content of particulate	450 ppm by weight	450 ppm by weight	7
Emission factors[b]			
° particulate	120 g/kg dry process	240 lb/ton dry process	4
	114 g/kg wet process	228 lb/ton wet process	4
° lead	0.06 g/kg dry process	0.11 lb/ton dry process	
	0.05 g/kg wet process	0.10 lb/ton wet process	

[a] Lower range for wet process exhaust and higher range for dry process exhaust.

[b] Expressed in terms of production rate.

A. Fabric Filters: Fabric filters installed on cement kilns, grinders, coolers, and transfer points can achieve efficiencies of 99.5 percent or higher. Also effective are reverse-air cleaning with a filtration velocity of 0.6 to 0.8 cm/s (1.2 to 1.5 fpm), pulse-jet cleaning with a filtration velocity of 3.5 to 5 cm/s (7 to 10 fpm), or mechanical shaker cleaning with a filtration velocity of 1 to 1.5 cm/s (2 to 3 fpm).[9] Fiberglass or Nomex^{R} bags, at temperatures of 230 to 290°C (450-550°F), can be utilized. Average bag life is about 2 years. Pressure drops of 0.8 to 1.7 kPa (3 to 7 in. H_2O) are common. Grain loadings as low as 92 to 34 mg/m^3 (0.04 and 0.015 gr/scf) can be achieved on dry and wet process kilns, respectively.

Condensation of moisture in the filter compartment will cause bag plugging, increased pressure drop, bag wear, and reduced collection efficiency. Duct work can be insulated to prevent condensation.[2] Baghouses have provided more reliable operation than precipitators, although precipitators require less energy and operate at lower costs.

The relative small particle size of clinker cooler dust requires the use of high-energy control devices to meet new source performance standards. Although precipitators are not widely used for clinker cooler control, several installations are operating successfully.[3]

Screens, mills, storage bins, and packaging facilities are usually vented to mechanical collectors and baghouses in series. Transfer points, drop points, elevator boots, and loading stations should be hooded to control emissions. These are relatively minor sources of lead emissions.[2]

Raw and finish milling processes are usually controlled by fabric filters, although precipitators effectively clean the exhaust streams from finish mills. These control devices, connected in a closed loop with air separators, transport the collected material back to the process for cement production.[2]

B. Electrostatic Precipitators: In wet-process plants, the performance of ESP's is greatly enhanced by the additional moisture content of the exhaust gases. For efficient performance in dry process plants, the exhaust gases must be conditioned by water sprays to decrease particle resistivity and temperature.[2] Drift velocities of 7.6 to 13.7 cm/s (0.25 to 0.45 fps) are typical.[9] Efficiencies of 99 percent or greater can be attained.

When precipitators or fabric filters are used on wet-process kilns, extensive thermal insulation must be provided to prevent condensation of water vapor within the device. Although some precipitators are specified to withstand a maximum temperature of 370°C (700°F), the usual operating range is 150 to 260°C (300 to 500°F).[2] Wet-process kiln

gases exhibit the proper moisture and temperature characteristics for effective electrostatic precipitation. Several preheater installations utilize the kiln exhaust gases to dry and heat the raw material, increasing the moisture content of the gas and reducing its temperature.[2]

4.9.2 Metallic Lead Products

Lead is consumed and emitted in the manufacture of ammunition, bearing metals, weights and ballasts, caulking lead, pipes and sheet lead, and other products. Over 180 Gg of lead (200,000 tons) was consumed by these industries in 1975.[12] A total of 77 Mg of lead emissions (85 tons) resulted from these manufacturing operations.

4.9.2.1 Process Descriptions

A. Ammunition: Lead used in the manufacture of ammunition is processed by melting and alloying before it is cast, sheared, extruded, swaged, or mechanically worked in the production of lead shot or lead-filled ammunition. Some lead is also reacted to form lead azide, a detonating agent. Little or no pollution control equipment is used.

B. Bearing Metal: Lead is used in bearing manufacture by alloying it with copper, bronze, antimony, and tin to form various alloys or babbitts having desirable properties of lubrication, strength, and temperature. The bearings are used in electric motors, machines, and engines.

C. Other Sources of Lead: Other lead products include terne metal, weights and ballasts, caulking lead, plumbing supplies, roofing materials, casting metal foil, collapsible tubes, and sheet lead. Lead is also used for galvanizing, annealing, and plating. The lead is usually processed by melting and casting followed by mechanical forming operations. These small manufacturers do not use air pollution control equipment.

4.9.2.2 Emissions

A. Ammunition: Emission factors are estimated at 0.5 g/Mg (1.0 lb/10^3 ton) of lead processed or less.[13] The usage of lead in 1975 for ammunition production was 68.1 Gg (75,081 tons),[12] and lead emissions were only 34 kg (75 lb).

B. Bearing Metal: Although lead is melted, alloyed, machined, mechanically formed, cleaned and handled, the emissions from this source are negligible, even without pollution control.[13] Only 10.96 Gg of lead (12,184 tons) was used by this source in 1975.[12]

C. Other Sources of Lead: The lead emission factors are reported to range from 0.3 to 2.2 g/kg (0.5 to 4.3 lb/ton) of lead processed, averaging 0.8 g/kg (1.5 lb/ton) of lead processed.[13] The following amounts of lead were processed in 1975: caulking lead, 13.0 Gg (14,296 tons); pipe and sheet lead, 35.5 Gg (39,092 tons); weights and ballast, 18.2 Gg (20,018 tons); and other, 36.4 Gg (40,097 tons), for a

total of 102.9 Gg (113,503 tons).[12] With an emission factor of 0.75 g/kg (1.5 lb/ton), 1975 emissions from these sources were about 77 Mg (85 tons).

4.9.2.3 Control Techniques - Published information is very scarce regarding the process description, emission characteristics, control techniques, and control costs for manufacture of metallic lead products. The available references state that little or no emission control is provided.[12]

4.9.3 Lead Glass Production

In 1975, total glass production was about 14.9 Tg (16.4 million tons).[14] It is assumed that the production of lead glass accounted for about 3 percent of the glass produced, totalling 446 Gg (492,000 tons). Lead emissions to the atmosphere from this industry were 56 Mg (62 tons) in 1975.

4.9.3.1 Process Description - Lead glass is basically composed of silica sand and lead oxide. The lead oxide content usually ranges from 12 and 60 percent, although some types contain as much as 92 percent lead oxide.[15] Lead oxide glass has a high refractive index and density, high electrical resistivity, and a low softening temperature. Because of these properties it is useful for radiation shielding, fluorescent lamp envelopes, optical glasses, and lead crystal glass.

Glass manufacturing techniques vary widely; common procedures include batch weighing, mixing, charging, and melting operations. Batch weighing and mixing systems range from manual to fully automated operations. Most plants use rotating-barrel type mixers, which tumble the batch upon itself in a revolving drum or double cone. The glass furnaces are charged continuously or intermittently by means of manual or automatic feeders.

Most glass is melted in conventional end or side-port regenerative or recuperative furnaces. Natural gas or oil is the fuel, with or without electric "boosting". A typical regenerative furnace is shown in Figure 4-55.

In the furnace, the mixture of materials is held in a molten state at about 1540°C (2800°F) until it acquires the homogenous character of glass. It is then cooled gradually in other sections of the furnace to about 1200°C (2200°F) to make it viscous enough to form. The glass is drawn from the furnace and worked on forming machines by a variety of methods including pressing, blowing in molds, drawing, rolling, and casting. Handling of raw materials and the furnace and forming operations are potentially significant sources of atmospheric emissions. The glass furnace is usually the major source.

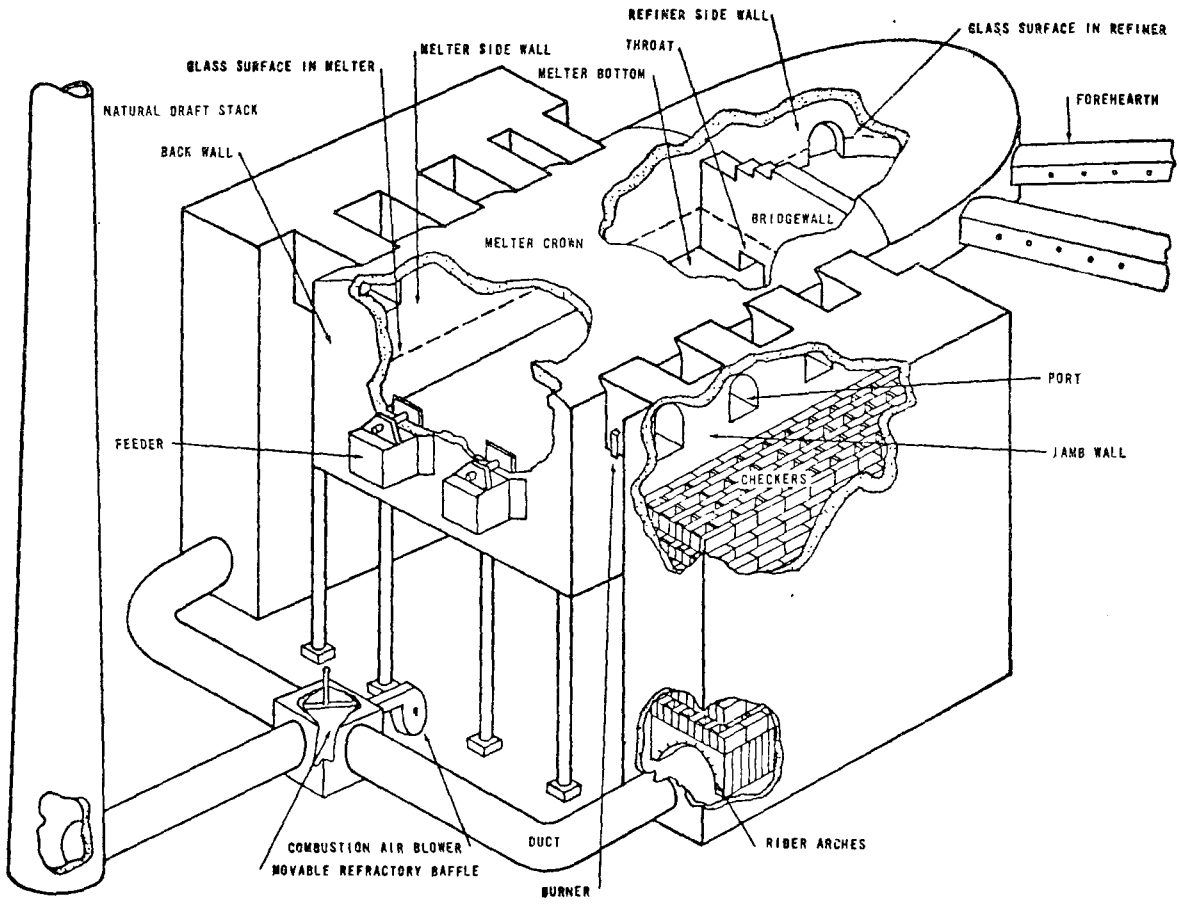

Figure 4-55. Regenerative glass furnace.[16]

4.9.3.2 Emissions - The composition and rate of emissions from glass melting furnaces varies considerably, depending on the composition of glass being produced and, to a lesser extent, on the design and operating characteristics of the furnace.

Operators of one lead glass furnace report tests showing that particulate emissions range from 12 to 19 g/kg (24 to 38 lb/ton) of charge in producing glass containing 28 percent lead. The lead emission factors are 2.6 to 4.0 g/kg (5.1 to 8.0 lb/ton) of glass produced, based on a 23 percent lead content of the particulate and an 8 percent throughput loss due to volatilization. The average of three tests were 2.5 g Pb/kg (5.0 lb/ton) glass.[17] Gas flow rates were measured at 1.0 $m^3/s \cdot Mg \cdot h^{-1}$ throughput (3300 acfm/tph). Outlet gas temperature ranged from 400 to 425°C (750 to 800°F). Outlet grain loading ranged from 2.2 to 3.2 g/kg (0.9 to 1.3 gr/scf).[17]

Based on an estimated lead glass production rate of 446 Gg (492,000 tons), the 1975 annual lead emissions were about 56 Mg (62 tons), assuming an overall control efficiency of 95 percent.[17]

4.9.3.3 Control Techniques -

A. Raw Material Handling: Practices such as choke feeding, enclosed unloading, and use of "socks" between transport car discharge and conveyor pickup points can reduce fugitive dust emissions.

Vent filters can be used to control emissions from bin filling and conveying operations. Fabric filters can be used to control emissions from mixers and weigh hoppers. Particulate collection efficiency of such units exceeds 99 percent on a weight basis.

B. Glass Furnace: When emissions slightly exceed regulations, the least expensive and most desirable control methods involve modification of operating variables. These methods include (1) use of raw materials with lower content of fines; (2) maintainence of free moisture of the batch at about 4 to 5 percent; (3) control of the air-fuel ratio; (4) use of electrical energy to supplement and reduce the use of other fuels; and (5) reduction of air flow rate on the furnace.[18] Emissions can be further reduced by lowering furnace temperatures by such means as reducing the airflow rate, increasing cullet (broken glass) ratios, modifying batch preparation, and by increasing the amount of electrical boosting.[19]

If these techniques are inadequate for meeting emission limits, a baghouse provides the most effective means of controlling particulate emissions. Collection efficiencies have exceeded 99 percent on certain types of glass furnaces. In pilot study the filtering velocity was 2 to 2.5 cm/s (4 to 5 fpm) with a pressure drop of 2 to 2.5 kPa (8 to 10 in. H_2O).[20] Full-scale units are operating with filtering

velocities of 0.5 to 1 cm/s (1 to 2 fpm). Precautions must be taken to overcome problems of acid gases and high temperatures, since SO_2 and SO_3 in the effluent will cause severe acid corrosion and hot off-gases cause deterioration of the filter cloth. Bags made of felted Nomex^R, silicone-treated glass fiber, and Dacron^R have been used effectively in these applications.[16,20]

Wet scrubbers have proved relatively ineffective in collecting the particulates of submicron size characteristic of glass furnace emissions. Tests of a low-pressure-drop, wet centrifugal scrubber showed an overall efficiency of only 52 percent.[18] Higher-energy venturi scrubbers require a pressure drop of over 13 kPa (50 in. H_2O) to achieve an efficiency of approximately 97 percent.[20]

Electrostatic precipitators have also proved ineffective. Tests on certain glass furnaces indicate efficiencies between 80 and 90 percent.[20] One ESP on a lead glass furnace achieved 97 percent efficiency.[17]

4.9.4 References for Section 4.9

1. U.S. Industrial Outlook 1976. U.S. Department of Commerce. Domestic and International Business Administration. Bureau of Domestic Commerce. January 1976. 465 p.

2. Emissions, Effluents, and Control Practices for Stationary Particulate Pollution Sources. Chapter 10. Midwest Research Institute. Kansas City, Mo. For National Air Pollution Control Association. Cincinnati, OH. Contract No. CPA 22-67-104. November 1, 1970. 607 pp.

3. Kulujian, N. J. Inspection Manual for the Enforcement of New Source Performance Standards: Portland Cement Plants. PEDCo Environmental Specialists, Inc. Cincinnati, OH. For U.S. Environmental Protection Agency, Washington, D.C. Contract No. 68-02-1355, Task 4. January 1975.

4. Compilation of Air Pollutant Emission Factors. 2nd Edition. U.S. Environmental Protection Agency. Research Triangle Park, N.C. Publication AP-42. February, 1976.

5. Control Techniques for Particulate Air Pollutants. U.S. Environmental Protection Agency. Research Triangle Park, N.C. Publication AP-51. January 1969. 215 pp.

6. Kreichelt, T. E., et. al. Atmospheric Emissions from the Manufacture of Portland Cement. Publication 999-AP-17. U.S. DHEW. PHS. N CAPC. Cincinnati, Ohio. 1967.

7. EPA Test No. 71-MM-02, 71-MM-02, 71-MM-03 and 71-MM-05. Emission Measurements Branch. U.S. Environmental Protection Agency. Research Triangle Park, N.C.

8. National Emission Data Systems. Environmental Protection Agency. Research Triangle Park, N.C. March 1976.

9. Kinkley, M.L. and R.B. Neveril. Capital and Operating Costs of Selected Air Pollution Control Systems. Draft report. Gard, Inc. Niles, Illinois. For U.S. Environmental Protection Agency. Research Triangle Park, N.C. Contract No. 68-02-2072. March 1976.

10. Pesachowitz, A.M. Portland Cement Plants. Division of Stationary Source Performance. Environmental Protection Agency. Washington, D.C. 30 pp.

11. Hardison, L. C. and H. R. Herrington. Study of Technical and Cost Information for Gas Cleaning Equipment in the Lime and Secondary Non-ferrous Metallurgical Industries. Industrial Gas Cleaning Institute. Rye, N.Y. For U.S. Environmental Protection Agency. Research Triangle Park, N.C. Contract EPA 70-150. December 31, 1970. 293 p.

12. Lead Industry in May 1976. Mineral Industry Surveys. U.S. Department of Interior. Bureau of Mines. Washington, D.C. August 5, 1976.

13. Emission Study of Industrial Sources of Lead and Air Pollutants. 1970. U.S. Environmental Protection Agency. APTD-1543. By W.E. Davis. Contract No. 68-02-0271. May 1973.

14. Private Communication. July 23, 1976.

15. Dietz, E. D. Glass. In: Chemical and Process Technology Encyclopedia. Considine, D.M. Los Angeles, McGraw-Hill, Inc. 1974. p. 552-561.

16. Danielson, J. A. Air Pollution Engineering Manual. U.S. Department of Health, Education, and Welfare. Cincinnati, Ohio. 1967. No. 999-AP-40. p. 776.

17. Confidential Test Data. PEDCo-Environmental Specialist, Inc. Cincinnati, Ohio.

18. Simon, H. and J. E. Williamson. Control of Fine Particulate From Continuous Melting Regenerative Container Glass Furnaces. (Presented at Annual Air Pollution Control Association Meeting, Boston, June 15-20, 1975). 12 p.

19. Kline, H. L. Discussion Outline: Air Pollution Control in the Glass Industry. In: Environmental Sciences Part III "Air Pollution Control in the Ceramics Industry. American Institute of Chemical Engineers. August 28, 1972. p. 1-6.

20. Franz, C. N. et.al. Glass Furnace Particulate Emission Control Equipment. (Presented at 32nd Annual Conference on Glass Problems. Urbana-Champaign. November 11, 1971).

APPENDIX

SYSTEMS OF UNITS[1]

The International System of units (SI) used in this document are expressed in or derived from the following basic quantities:

Quantity	Unit	Symbol
length	metric	m
mass	gram	g
time	second	s
temperature	Celsius	°C

Derived units such as m/s or g/m^3 can be obtained directly from a combination of the conversion factors given in Table A-1 and A-2. Other derived quantities are given below with their respective unit, symbol, and formula:

Quantity	Unit	Symbol	Formula
frequency	hertz	Hz	s^{-1}
force	newton	N	$kg \cdot m/s^2$
pressure	pascal	Pa	N/m^2
energy	joule	J	$N \cdot m$
power	watt	W	J/s

SI units are formed by a combination of the basic units above and the prefixes in Table A-1.

Table A-1. PREFIXES FOR THE SI SYSTEM OF MEASUREMENT[1]

Multiplication factor	Prefix	Symbol
1 000 000 000 000 000 000 = 10^{18}	exa[a]	E
1 000 000 000 000 000 = 10^{15}	peta[a]	P
1 000 000 000 000 = 10^{12}	tera	T
1 000 000 000 = 10^{9}	giga	G
1 000 000 = 10^{6}	mega	M
1 000 = 10^{3}	kilo	k
100 = 10^{2}	hecto[b]	h
10 = 10^{1}	deka[b]	da
0.1 = 10^{-1}	deci[b]	d
0.01 = 10^{-2}	centi[b]	c
0.001 = 10^{-3}	milli	m
0.000 001 = 10^{-6}	micro	μ
0.000 000 001 = 10^{-9}	nano	n
0.000 000 000 001 = 10^{-12}	pico	p
0.000 000 000 000 001 = 10^{-15}	femto	f
0.000 000 000 000 000 001 = 10^{-18}	atto	a

All data given in this document are expressed in the new SI system of units and are followed by the equivalent expressed in common English units. The following are examples of this format:

5 kPa (20 in. H_2O)

4.6 g/m^3 (2 gr/scf)

10 m^3/s (21,190 acfm)

Units such as microgram per cubic metre ($\mu g/m^3$) and micrometre (μm) are almost exclusively used as common English units in current literature and legal documents.

Therefore these units are used to express ambient air concentration and particle size and no equivalent English units are given.

Mixed units such as grams per mile (g/mi) and grams per gallon (g/gal) are also exclusively used in current literature and legal documents pertaining to automotive emission control. These units have been expressed in the SI system followed by the common units as in the following example:

10 g/km (16.1 g/mi)

18.9 g/l (5 g/gal)

Table A-2 presents factors to convert SI system of units into English units.

Table A-2. CONVERSION FACTORS[1]

	Multiply	By	To obtain
Energy	joule (J)	9.478 E-04	British Thermal Unit (BTU)
Length	meter (m)	3.281 E+00	foot (ft)
Mass	gram (g)	2.205 E-03	pound (lb)
	kilogram (kg)	1.102 E-03	ton (short)
Pressure	pascal (Pa)	1.450 E-04	pound/sq. in. (psi)
	pascal (Pa)	4.019 E-03	inch of water (60°F)
Temperature	degrees centigrade (°C)	1.8 (T°C)+32	degrees Fahrenheit (°F)
Velocity	centimeters/second (cm/s)	1.969 E+00	feet/minute (fpm)
	meters/second (m/s)	2.237 E+00	miles per hour (mph)
Volume	liter (l)	2.642 E-01	gallon (gal)
	cubic metre (m^3)	2.642 E+02	gallon (gal)

[1] The usage of SI units in this document conforms to the standard and international guidelines in Standard for Metric Practice. American Society for Testing and Materials. Philadelphia, Pa. ASTM Publication E 380-76, 268-1975. January 19, 1976. 37p.

APPENDIX B

The purpose of this section is to outline the details and assumptions of the control cost analyses performed for the following industries:

Lead Additives Production
Battery Manufacturing
Primary Lead Smelting
Primary Zinc Smelting
Primary Copper Smelting
Secondary Lead Smelting
Brass and Bronze Production
Gray Iron Foundries
Lead Oxide Manufacturing
Ferroalloys Production
Municipal Incineration

Table B-1 shows the steps necessary in order to arrive at the total equipment cost. Tables B-2 and B-3 present the bases for determining capital and annualized costs from the total equipment cost.

Higher capital costs are generally required for the installation of control equipment in existing plants than for new plants. A control system can be incorporated into the overall design of a proposed plant, whereas a retrofit application requires that the system be adapted to the rigid configurations of the existing plant. Additional labor and material expenses are incurred for longer duct runs, tight

Table B-1. STEPS TO DETERMINE TOTAL EQUIPMENT COSTS

1. Choose a model size process	Material throughput, production, annual operating hours.
2. Determine exhaust gas characteristics	Volume, temperature, grain loading, mass emission rate, moisture.
3. Select a typical emission control system	Type of control device, gas cooling and conditioning, ductwork, materials of construction.
4. Determine control system design parameters	Total system efficiency, pressure drop, air-to-cloth ratio, ESP plate area, etc.
5. Size required equipment	Hold tank volume, baghouse cloth area, fan horsepower, ductwork weight.
6. Price required equipment	Based on vendor and manufacturer's quotations.

Table B-2. CAPITAL COST BASES

DIRECT COSTS	
A. Material and Labor Components	
Equipment	Structure
Instrumentation	Sitework
Piping	Insulation
Electrical	Painting
Foundations	
B. Installation Factors[a]	
Shell-and-tube heat exchanger	3.5
Pump systems	4.0
U-tube coolers	3.5
Fan systems	2.5
Ductwork	2.6
Fabric filter	2.0
ESP	2.0
Venturi scrubber	3.0
Packed tower	3.0
Hold tank	2.0
Quench tower	3.0
Vacuum filter	3.0
INDIRECT COSTS	
	% of total direct costs
Interest during construction	10
Field labor and expenses	10
Contractor's fee	5
Engineering	10
Freight	1.25
Offsite	3.0
Spares	0.5
Taxes	1.5
Shakedown	5.0
CONTINGENCIES	20% of directs and indirects

[a] Multiply by base equipment price to include material and labor components (A) for direct costs for field erection. Installation factors are obtained from Chemical Engineering (1969), Perry's Handbook, PEDCo Environmental.

Table B-3. ANNUALIZED COST BASES

A. Utilities		
Electricity	$0.03/kWh	
Water	$0.25/M gal.	
B. Operating Labor		
Direct[a]	0.3-2 men/shift; $10/man-hr	
Supervision	15% direct	
C. Maintenance		
Labor and materials	5% TCI[b]	- fabric filter
	2% TCI	- ESP
	4% TCI	- venturi Scrubber
Supplies	15% labor and materials	
D. Overhead		
Plant	50%(B + C)	
Payroll	20% B	
E. Fixed Costs		
Capital recovery	11.75% TCI[c] for ESP and fabric filter	
	16.28% TCI[d] for venturi scrubber	
Taxes, insurance, etc.	4% TCI	
F. Sludge Disposal[e]	$22 per trip (70-minute round-trip)	
	10 tons per trip	
	$40 per load for landfill charge	

[a] Dependent on system size and characteristics.

[b] TCI = Total capital investment.

[c] Based on 20 year equipment life; 10% interest.

[d] Based on 10 year equipment life; 10% interest.

[e] Conversation with Mr. Richard Toftner of PEDCo Environmental Inc., Cincinnati, Ohio.

spaces, and delayed construction. Other capital cost components that can be increased are construction labor, and expenses, interest during construction, contractor fees, and allowance for shakedown.

Table B-4 indicates the retrofit factors assumed in the cost studies for each industry. With two exceptions (see footnote), these factors are multiplied by the total direct costs to account for the additional costs.

Table B-4. RETROFIT FACTORS

Lead additives	1.2[a]
Batteries	1.2
Primary lead	1.4
Primary copper	1.4
Primary zinc	1.4
Iron and steel	1.4[a]
Brass and bronze	1.2
Ferroalloys	1.3
Gray iron	1.2
Lead oxide	1.1
Secondary lead	1.2
Municipal incineration	1.1

The costs given in the document for the above industries reflect particulate control costs for achieving an average state emission limitation for existing plants. These costs should be within ± 30 percent of the true value, based on volume flow rate.

Cost equations can be developed relating exhaust flow rate to capital costs. The most accurate method of determining a capital cost equation is to evaluate three or more system sizes. Plotting capital cost versus exhaust flow rate on log-log graph paper usually yields a straight line from

[a]For this industry, multiply retrofit factor by total new plant installed cost, to obtain retrofit installed cost.

which an equation can be derived. The equation will be of the form:

$$\text{Capital cost, \$} = CQ^a,$$

where Q is exhaust volume at a specific temperature, and C and a are constants. The equation would predict capital cost within a certain range of flow rates.

Annualized costs can be expressed as an equation relating cost to exhaust flow rate and annual labor hours. Annualized costs include components which are directly related to flow rate (utilities), capital costs (maintenance, overhead, and fixed costs) and labor hours (labor and overhead). The cost equation, therefore, is of the following form:

$$\text{Annualized cost, \$} = AQ + BQ^a + CH,$$

where a, A, B, and C are constants, Q is exhaust flow rate at a specific temperature, and H is annual labor hours. Costs related to solid waste disposal and credit for product recovery can also be included in the equation.

Most cost equations given in this document were derived from only one middle-sized control system. The "Q to the point six law" ($Q^{0.6}$) is used to determine the capital cost equation. Most equipment size-cost exponents are between 0.5 to 0.7. To reduce the error it is recommended that the equations be used for volume flow rates of a factor of about 3 on either side of the volume for the model plant. This allows the use

---

[a] See Section 2.9 and Appendix B for discussion of cost analyses Detailed cost studies are available from EPA upon request.

of the equation within a factor of about 10, i.e. 10^4 to 10^5.

An example cost analysis for a brass and bronze reverberatory furnace, equipped with a fabric filter emission control system, is presented below.

Attachment I is a process description and cost summary. Table B-5 indicates the typical exhaust gas characteristics. Figure B-1 shows a sketch of the control system and design parameters. Table B-6 is a detailed schedule of required equipment, design and cost bases, bare costs, installed costs, and total capital costs. Table B-7 shows the breakdown of the annualized costs.

Control Costs - A reverberatory furnace rated at a production capacity of 45.3 Mg/day (50 TPD) is considered the typical model size to determine control costs. The furnace exhausts 18.4 m^3/s at 1090°C (39,000 acfm at 2000°F) and emits 83 kg/h (183 lb/hr) particulate matter, of which 15 percent is lead. The gases enter a quench tower, where they are cooled to 120°C (250°F) before they enter a fabric filter. The fabric filter must be insulated to prevent condensation. The shaker-type fabric filter is designed to handle 8.5 m^3/s (18,000 acfm) at a superficial filter velocity of 1.2 cm/s (2.5 fpm). A fan system rated at 8.5 m^3/s (18,000 acfm) and a system pressure drop of 1.8 kPa (7 in. W.G.) is also required. This control technique will permit compliance with the average state particulate limitation of 3.6 kg/h (7.9 lb/hr), with an overall efficiency of more than 99 percent. This corresponds to an actual emission rate of 0.83 kg/h (1.83 lb/hr) particulate and 0.12 kg/h (0.27 lb/hr) lead.

Capital costs are estimated at $407,000, including quench tower, pump, hold tank, collector, insulation, fan system, and ductwork.

Annualized costs are estimated at $202,000, including utilities, labor, maintenance, overhead, fixed costs (with capital recovery), and solid waste disposal in sealed barrels. An annual operating time of 6000 hours and annual

labor of 2000 hours are assumed.

Capital and annualized costs are expressed below in terms of exhaust flow rate, annual labor hours, and furnace capacity:

S.I. units

Capital, $ = $7.1 \times 10^4 V^{0.6}$

Annualized, $ = $587V + 1030\ M + 19.6H + 2.1 \times 10^5 V^{0.6}$

V = m^3/s at 1090°C
H = annual labor hours
M = furnace capacity, Mg/day product

Range: $6 < V < 60$
range

English units

Capital, $ = $716\ Q^{0.6}$

Annualized, $ = $0.277Q + 932T + 19.6H + 187Q^{0.6}$

Q = acfm at 2000°F
H = annual labor hours
T = furnace capacity, TPD product
(for solid waste disposal costs)

Range: $13{,}000 < Q < 130{,}000$
range

Table B-5. CHARACTERISTICS OF UNCONTROLLED EXHAUST GAS FROM A BRASS AND BRONZE REVERBERATORY FURNACE

Parameters	Standard International units	English units	References[d]
Gas flow rate[a]	4.5 $m^3/s \cdot Mg \cdot h^{-1}$ product	8600 acfm/tph product	3
Temperature[b]	925-1315°C	1700-2400°F	16
Grain loading	0.12-9.4 g/m^3	0.05-4.1 gr/scf	13
Particle size distribution	0.03-0.5 µm (majority)	0.03-0.5 µm (majority)	15
Lead content of particulate[c]	High-leaded 58% w yellow and red 15%		15 15
	Other brass and bronze 7% w		13,17,18
Emission factors			
° Particulate	35 g/kg charge	70 lb/ton charge	14
° Lead[e]	2.4 g/kg charge	4.9 lb/ton charge	

[a] Flow rates can vary according to the hooding arrangement required. Volume given is at 120°C (250°F).

[b] Temperature is usually reduced to 120°C (250°F).

[c] Dependent upon lead content of the product.

[d] See Section 4.4 for references.

[e] Based on 7% w Pb in particulate.

labor of 2000 hours are assumed.

Capital and annualized costs are expressed below in terms of exhaust flow rate, annual labor hours, and furnace capacity:

S.I. units

Capital, $ = $7.1 \times 10^4 V^{0.6}$

Annualized, $ = $587V + 1030\ M + 19.6H + 2.1 \times 10^5 V^{0.6}$

V = m^3/s at 1090°C
H = annual labor hours
M = furnace capacity, Mg/day product

Range: $6 < V < 60$
range

English units

Capital, $ = $716\ Q^{0.6}$

Annualized, $ = $0.277Q + 932T + 19.6H + 187Q^{0.6}$

Q = acfm at 2000°F
H = annual labor hours
T = furnace capacity, TPD product
(for solid waste disposal costs)

Range: $13{,}000 < Q < 130{,}000$
range

Table B-5. CHARACTERISTICS OF UNCONTROLLED EXHAUST GAS FROM A BRASS AND BRONZE REVERBERATORY FURNACE

Parameters	Standard International units	English units	References[d]
Gas flow rate[a]	4.5 $m^3/s \cdot Mg \cdot h^{-1}$ product	8600 acfm/tph product	3
Temperature[b]	925-1315°C	1700-2400°F	16
Grain loading	0.12-9.4 g/m^3	0.05-4.1 gr/scf	13
Particle size distribution	0.03-0.5 µm (majority)	0.03-0.5 µm (majority)	15
Lead content of particulate[c]	High-leaded 58% w yellow and red 15%		15 15
	Other brass and bronze 7% w		13,17,18
Emission factors			
° Particulate	35 g/kg charge	70 lb/ton charge	14
° Lead[e]	2.4 g/kg charge	4.9 lb/ton charge	

[a] Flow rates can vary according to the hooding arrangement required. Volume given is at 120°C (250°F).

[b] Temperature is usually reduced to 120°C (250°F).

[c] Dependent upon lead content of the product.

[d] See Section 4.4 for references.

[e] Based on 7% w Pb in particulate.

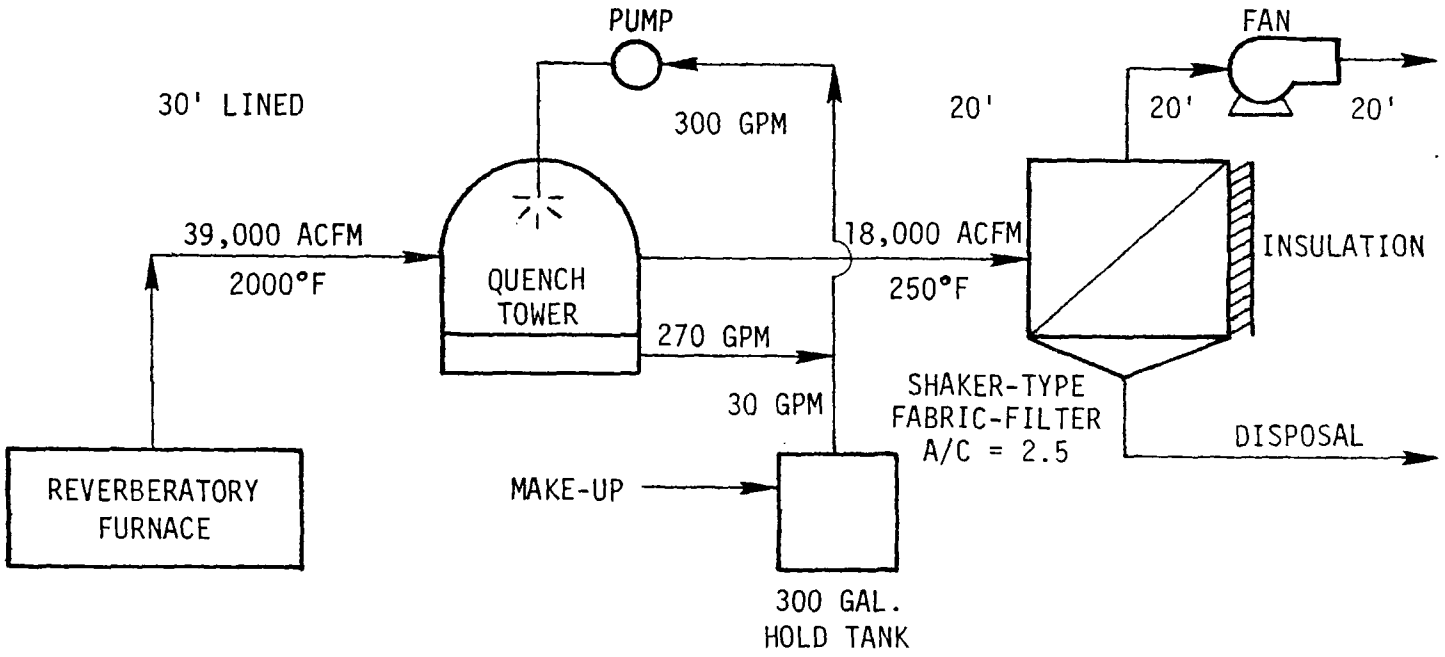

Figure B-1. Control system diagram for brass and bronze reverberatory furnaces.

Table B-6. DETERMINATION OF CAPITAL COSTS FOR PARTICULATE CONTROL SYSTEM FOR A BRASS AND BRONZE REVERBERATORY FURNACE

Equipment item	Design basis	Capacity/Size	Cost source and basis	Bare cost,	Installation factor	Direct installed Cost, $
Quench tower[a]	Refractory-lined-1/4" carbon carbon steel, cool from 2000°F to 250°F	39,000 acfm in.	Croll-Reynolds-refractory brick is $50/ft^3 installed	30,000	3.0	90,000
Pump	Centrifugal 300 gpm 100 ft. head	15 hp	Ingersoll-Rand $92/hp includes base, motor, couples	1,300	4.0	5,200
Fabric filter[b]	A/C = 2.5. Shaker-type Dacron[b] bags 18,000 acfm	7,500 ft^2 cloth area	Fisher Klostermann $3/$ft^2$ cloth	22,500	2.0	45,000
Fan system[c]	System ΔP = 7" WG 18,000 acfm	35[b] hp	$75/hp - PEDCo estimate includes motor, starter, drive	2,600	2.5	6,500
Ductwork[d]	1/4" carbon steel - 3500 fpm velocity	90 feet total	$1.5/lb carbon steel installed directs Means Cost Data	14,000 inst.	-	14,000
Insulation for baghouse	3" thick mineral wool with aluminum casing	2900 ft^2 area	$7.5/$ft^2$ installed Kramig Co., Cincinnati	21,800 inst.	-	21,000
Hold tank	10 min. retention carbon construction	300 gal.	Chem. Eng. 1969	6,900	1.5	10,400
			Direct cost			193,000
			A. Total adjusted direct cost (direct cost x retrofit factor 1.2)			232,000
			B. Total indirect cost (46% of A)			107,000
			C. Contingency (20% of A + B)			68,000
			D. Total capital cost (A + B + C)			407,000

[a] Includes vessel, spray heads, controls, and supports.

[b] Includes bags, shaker units, ladder, supports, hoppers, and factory assembly.

[c] Includes motor, drive, and starter.

[d] Does not include expansion joints, elbows, transitions, etc. Contingency and retrofit costs will cover these items.

Table B-7. CONTROL SYSTEM ANNUAL OPERATING COST

			Cost, $
Raw Material	0 Ton/hr.		0
Electricity[a]	45 kW	30 mills/kWh	8,100
Water	30 gpm	$0.25/M gal.	2,700
Sludge disposal[b]	540 tpy		46,600
Labor		2000 hr	
Operating labor	~ 6 man-hr/day	$10/man-hr	20,000
Supervision	15% of operating labor		3,000
Maintenance			
Labor and material	6% of total capital cost including bag replacement		24,400
Supplies	15% of labor and materials		3,600
Overhead			
Plant	50% of labor and maintenance		25,500
Payroll	20% of labor		4,600
Fixed costs	15.75% of total capital cost		64,000
	Total annual cost, $		202,000

[a] 11 kW pump + 26 kW fan power + 20% miscellaneous for lighting, conveyors, etc.

[b] Includes barrels, shipment, labor, and disposal charge at landfill.

TECHNICAL REPORT DATA
(Please read Instructions on the reverse before completing)

1. REPORT NO.	2.	3. RECIPIENT'S ACCESSION NO.
EPA-450/2-77-012		

4. TITLE AND SUBTITLE	5. REPORT DATE
Control Techniques for Lead Air Emissions	January 1978
	6. PERFORMING ORGANIZATION CODE

7. AUTHOR(S)	8. PERFORMING ORGANIZATION REPORT NO.
David M. Augenstein, Tom Corwin, Robert Hearn, Vishnu Katari, James Sperber, and Robert L. Harris, Jr.	

9. PERFORMING ORGANIZATION NAME AND ADDRESS	10. PROGRAM ELEMENT NO.
PEDCo Environmental, Inc. Chester Towers Cincinnati, Ohio 45246	11. CONTRACT/GRANT NO. Contract No. 68-02-1375 Task No. 32

12. SPONSORING AGENCY NAME AND ADDRESS	13. TYPE OF REPORT AND PERIOD COVERED
U.S. Environmental Protection Agency Office of Air and Waste Management Office of Air Quality Planning and Standards Research Triangle Park, North Carolina 27711	Final 14. SPONSORING AGENCY CODE 200/04

15. SUPPLEMENTARY NOTES
PEDCo Project Director: Richard W. Gerstle
EPA Project Officers: John R. Floyd and George B. Crane

16. ABSTRACT
This publication describes sources of atmospheric lead (Pb) emissions in the United States and deals with methods of emission control and estimated costs of controls. Lead emissions have been almost ubiquitous in this country and have arisen from automobiles, the metallurgical industry, fuel combustion, and many lead-using manufacturing processes. Gasoline combustion contributed 90.4 percent of the 141.4 Gg (155,900 tons) total lead emissions in 1975. The next largest lead emitters were waste oil disposal, primary copper smelting, and solid waste incineration. Significant sources of fugitive lead emissions are primary nonferrous smelters and secondary lead smelters. Lead emissions from gasoline have consisted mostly of lead halides and oxyhalides. Industrial lead emissions consist mainly of lead oxides; lead alkyl manufacture emits small amounts of those alkyls as vapors. Control of lead emissions from automobiles is being achieved by reduction or elimination of lead in gasoline. Particulate lead emissions from industry are being controlled by electrostatic precipitators and fabric filters, up to efficiencies of about 99.5 and 99.9 percent, respectively. Scrubber efficiencies can reach 99 percent at the expense of high power usage. Cost data on lead emission controls is limited; therefore, for most industrial sources, model plants were described, and equations were derived for capital and annualized costs, based on exhaust flow rate and annual labor hours. Appendix B of the document shows how the equations may be adjusted to apply to either new or retrofit constructions

17. KEY WORDS AND DOCUMENT ANALYSIS

a. DESCRIPTORS	b. IDENTIFIERS/OPEN ENDED TERMS	c. COSATI Field/Group
Lead emissions Fugitive emissions Gasoline combustion Nonferrous smelters Control techniques Costs		

18. DISTRIBUTION STATEMENT	19. SECURITY CLASS *(This Report)*	21. NO. OF PAGES
Release Unlimited	UNCLASSIFIED	554
	20. SECURITY CLASS *(This page)* UNCLASSIFIED	22. PRICE

EPA Form 2220-1 (9-73)