U.S. DEPARTMENT OF COMMERCE
National Technical Information Service

Evaluation of Pollution Potential of Proposed Hampton Roads Energy Company Refinery, Portsmouth, Virginia

Pacific Environmental Services, Inc, Santa Monica, Calif

Prepared for

Environmental Protection Agency, Research Triangle Park, N C

Nov 76

BIBLIOGRAPHIC DATA SHEET	1. Report No.	2.	3. Recipient's Accession No. PB-267 632

4. Title and Subtitle
Evaluation of Pollution Potential of Proposed Hampton Roads Energy Company Refinery, Portsmouth, Virginia.

5. Report Date
November 1976

6.

7. Author(s)
Leslie E. Norton, and Karl Kuedtke.

8. Performing Organization Rept. No.

9. Performing Organization Name and Address
Pacific Environmental Services, Inc.
Santa Monica, California

10. Project/Task/Work Unit No.

11. Contract/Grant No.

12. Sponsoring Organization Name and Address
Environmental Protection Agency
Research Triangle Park, N.C.
Office of Air Quality Planning and Standards

13. Type of Report & Period Covered

14.

15. Supplementary Notes
(PC A11/MF A01)

16. Abstracts

This report is an evaluation of air pollution potential associated with the proposed Hampton Roads Energy Company Petroleum Refinery to be located at Portsmouth, Virginia, and was prepared for the U.S. Environmental Protection Agency. Emission estimates in this report reflect the use of best available control technology for both fugitive and point sources. The report analyzes particulate, sulfur oxides, nitrogen oxides, and hydrocarbon emissions. The estimate of emissions from the refinery complex includes the unloading of crude tankers, and the loading of product barges at the marine facilities. Calculations by the refinery contractor (Foster Wheeler Energy Corporation) are reviewed.

17. Key Words and Document Analysis. 17a. Descriptors

*Air pollution control	Petroleum industry	Sulfur oxides
*Refineries	Inplant processes	Nitrogen oxides
Management planning	Equipment specifications	Hydrogen
Sulfur	Sources	Catalysis
Chemical plants	Sludge	Industrial wastes
Process charting	Hydrocarbons	Combustion products
Design criteria	Plant location	Distillation
Numerical analysis	Crude oil	
Sampling	Particles	

17b. Identifiers/Open-Ended Terms

*Hampton Roads Energy Company Petroleum Refinery	Catalytic chamber process
Air pollution sampling	Merox unit
Oil water separators	
Portsmouth(Virginia)	
Point sources	

17c. COSATI Field Group 7A

18. Availability Statement	19. Security Class (This Report)	21. No. of Pages
National Technical Information Service Springfield, VA 22161	UNCLASSIFIED	245
	20. Security Class (This Page) UNCLASSIFIED	22. Price PC A11/MF A01

PB 267 632

EPA-450/3-76-037
November 1976

EVALUATION OF POLLUTION POTENTIAL OF PROPOSED HAMPTON ROADS ENERGY COMPANY REFINERY, PORTSMOUTH, VIRGINIA

Property Of
EPA Library
RTP, NC 27711

U.S. ENVIRONMENTAL PROTECTION AGENCY
Office of Air and Waste Management
Office of Air Quality Planning and Standards
Research Triangle Park, North Carolina 27711

REPRODUCED BY
NATIONAL TECHNICAL
INFORMATION SERVICE
U S DEPARTMENT OF COMMERCE
SPRINGFIELD VA. 22161

EPA-450/3-76-037

EVALUATION OF POLLUTION POTENTIAL OF PROPOSED HAMPTON ROADS ENERGY COMPANY REFINERY, PORTSMOUTH, VIRGINIA

by

Leslie E. Norton and Karl Luedtke

Pacific Environmental Services, Inc.
1930 14th Street
Santa Monica, California 90404

Contract No. 68-02-1378
Task No. 26

EPA Project Officer: David W. Markwordt

Prepared for

ENVIRONMENTAL PROTECTION AGENCY
Office of Air and Waste Management
Office of Air Quality Planning and Standards
Research Triangle Park, North Carolina 27711

November 1976

This report is issued by the Environmental Protection Agency to report technical data of interest to a limited number of readers. Copies are available free of charge to Federal employees, current contractors and grantees, and nonprofit organizations - in limited quantities - from the Library Services Office (MD-35), Research Triangle Park, North Carolina 27711; or, for a fee, from the National Technical Information Service, 5285 Port Royal Road, Springfield, Virginia 22161.

This report was furnished to the Environmental Protection Agency by Pacific Environmental Services, Inc., 1930 14th Street, Santa Monica, California 90404, in fulfillment of Contract No. 68-02-1378, Task No. 26. The contents of this report are reproduced herein as received from Pacific Environmental Services, Inc. The opinions, findings, and conclusions expressed are those of the author and not necessarily those of the Environmental Protection Agency. Mention of company or product names is not to be considered as an endorsement by the Environmental Protection Agency.

Publication No. EPA-450/3-76-037

ABSTRACT

This report is an evaluation of air pollution potential associated with the proposed Hampton Roads Energy Company Petroleum Refinery to be located at Portsmouth, Virginia, and was prepared for the U.S. Environmental Protection Agency. Emission estimates in this report reflect the use of best available control technology for both fugitive and point sources. The report analyzes particulate, sulfur oxides, nitrogen oxides, and hydrocarbon emissions. The estimate of emissions from the refinery complex includes the unloading of crude tankers, and the loading of product barges at the marine facilities. Calculations by the refinery contractor (Foster Wheeler Energy Corporation) are reviewed.

TABLE OF CONTENTS

Section		Page
I.	INTRODUCTION	1
II.	EMISSION SOURCES	7
	A. REFINERY EQUIPMENT	7
	1. Pumps	7
	2. Compressors	11
	3. Flanges	13
	4. Blinds	15
	5. Valves	16
	6. In-Line Spares	20
	7. Maintenance Practices	21
	8. Combustion Units	23
	B. CRUDE UNIT	27
	C. HYDROGEN PLANT	30
	D. NAPHTHA AND DISTILLATE HYDRODESULFURIZERS	33
	E. RESIDUUM HYDRODESULFURIZER	35
	F. DEBUTANIZER (STABILIZER) AND NAPHTHA SPLITTER	38
	G. CATALYTIC REFORMING	41
	H. DEPENTANIZER	42
	I. ISOMERIZER UNIT	45
	J. LPG PLANT	48
	K. AMINE TREATING	51
	L. SULFUR PLANT	53
	M. STEAM GENERATOR	61
	N. HREC MISCELLANEOUS COMPRESSORS AND PUMPS	61
	O. EMERGENCY FLARE SYSTEM, BLOWDOWN, STARTUPS, SHUTDOWNS	62
	P. COOLING TOWERS	64
	Q. OIL-WATER SEPARATION	66
	R. SOUR WATER STRIPPER	72
	S. SLUDGE INCINERATOR	72
	1. Fluidized Bed Incinerators	73
	2. Multihearth Units	74

TABLE OF CONTENTS (continued)

Section		Page
	T. CRUDE OIL UNLOADING	77
	U. PRODUCT LOADING	82
	1. Liquid Petroleum Gases (Propane and Butane)	84
	2. Tank Truck Loading Rack	84
	3. Pipeline	84
	4. Marine Barge Loading	85
	V. STORAGE TANKS	90
III.	EMISSION ESTIMATE COMPARISONS	97
	A. PARTICULATES	97
	B. SULFUR OXIDES	100
	C. NITROGEN OXIDES (NO_2)	102
	D. HYDROCARBONS	105
IV.	SUMMARY OF BACT	109
	A. COMBUSTION UNITS	109
	1. Particulates	109
	2. Sulfur Dioxide	110
	3. Nitrogen Oxides	110
	4. Hydrocarbons	110
	B. SULFUR RECOVERY TAIL-GAS CLEANUP	111
	C. FLARING	111
	D. SLUDGE INCINERATION	112
	E. MARINE TERMINAL OPERATION	112
	1. Crude Unloading	112
	2. Barge Loading	112
	F. STORAGE TANKS	113
	G. OIL-WATER SEPARATION	113
	H. REFINERY EQUIPMENT	113
	1. Relief Valves	113
	2. Pipeline Valves, Control Valves and Flanges	114
	3. Pump and Compressor Seals	114
	a. Rotating Shafts	114
	b. Reciprocating Shafts	114
	4. Blind Changing	114
	5. Sampling	115

TABLE OF CONTENTS (continued)

Section		Page
7.	SUMMARY	116
	A. BEAVON-STRETFORD TAIL-GAS CLEANUP SYSTEM	116
	B. MARINE TERMINAL	116
	C. NITROGEN OXIDES FROM PROCESS HEATERS	118
	BIBLIOGRAPHY	119
	ACKNOWLEDGEMENT	121
	APPENDICES	
	1. CALCULATIONS AND ASSUMPTIONS USED TO DETERMINE THE EMISSIONS FROM THE CRUDE DISTILLATION UNIT	A-1.1
	2. CALCULATIONS AND ASSUMPTIONS USED TO DETERMINE THE EMISSIONS FROM THE HYDROGEN PLANT	A-2.1
	3. CALCULATIONS AND ASSUMPTIONS USED TO DETERMINE THE EMISSIONS FROM THE NAPHTHA HYDRODESULFURIZER	A-3.1
	4. CALCULATIONS AND ASSUMPTIONS USED TO DETERMINE THE EMISSIONS FROM THE DISTILLATE HYDRODESULFURIZER	A-4.1
	5. CALCULATIONS AND ASSUMPTIONS USED TO DETERMINE THE EMISSIONS FROM THE RESIDUUM HYDRODESULFURIZER	A-5.1
	6. CALCULATIONS AND ASSUMPTIONS USED TO DETERMINE THE EMISSIONS FROM THE DEBUTANIZER (STABILIZER)	A-6.1
	7. CALCULATIONS AND ASSUMPTIONS USED TO DETERMINE THE EMISSIONS FROM THE NAPHTHA SPLITTER	A-7.1
	8. CALCULATIONS AND ASSUMPTIONS USED TO DETERMINE THE EMISSIONS FROM THE CATALYTIC SPLITTER	A-8.1
	9. CALCULATIONS AND ASSUMPTIONS USED TO DETERMINE THE EMISSIONS FROM THE DEPENTANIZER	A-9.1
	10. CALCULATIONS AND ASSUMPTIONS USED TO DETERMINE THE EMISSIONS FROM THE ISOMERIZER UNIT	A-10.1
	11. CALCULATIONS AND ASSUMPTIONS USED TO DETERMINE THE EMISSIONS FROM THE LPG PLANT	A-11.1
	12. CALCULATIONS AND ASSUMPTIONS USED TO DETERMINE THE EMISSIONS FROM THE OPTIONAL MEROX UNIT	A-12.1

TABLE OF CONTENTS (continued)

Section		Page
	APPENDICES (continued)	
13.	CALCULATIONS AND ASSUMPTIONS USED TO DETERMINE THE EMISSIONS FROM THE SULFUR PLANT.....	A-13.1
14.	CALCULATIONS AND ASSUMPTIONS USED TO DETERMINE THE EMISSIONS FROM THE STEAM GENERATING PLANT.	A-14.1
15.	CALCULATIONS AND ASSUMPTIONS USED TO DETERMINE THE EMISSIONS FROM MISCELLANEOUS HREC EQUIPMENT.....	A-15.1
16.	CALCULATIONS AND ASSUMPTIONS USED TO DETERMINE THE EMISSIONS FROM THE EMERGENCY FLARE SYSTEM.	A-16.1
17.	CALCULATIONS AND ASSUMPTIONS USED TO DETERMINE THE EMISSIONS FROM THE WATER COOLING SYSTEM...	A-17.1
18.	CALCULATIONS AND ASSUMPTIONS USED TO DETERMINE THE EMISSIONS FROM THE OIL-WATER SEPARATION UNITS.....	A-18.1
19.	CALCULATIONS AND ASSUMPTIONS USED TO DETERMINE THE EMISSIONS FROM THE SLUDGE INCINERATOR.....	A-19.1
20.	CALCULATIONS AND ASSUMPTIONS USED TO DETERMINE THE EMISSIONS FROM CRUDE OIL UNLOADING.....	A-20.1
21.	CALCULATIONS AND ASSUMPTIONS USED TO DETERMINE THE EMISSIONS FROM MARKETING FACILITIES.....	A-21.1
22.	CALCULATIONS AND ASSUMPTIONS USED TO DETERMINE THE EMISSIONS FROM STORAGE TANK FACILITIES....	A-22.1

TABLE OF CONTENTS (continued)

LIST OF TABLES

Table		Page
1.	EMISSIONS FROM THE CRUDE UNIT	29
2.	EMISSIONS FROM THE HYDROGEN PLANT	32
3.	EMISSIONS FROM THE NAPHTHA HYDRODESULFURIZER	34
4.	EMISSIONS FROM THE DISTILLATE HYDRODESULFURIZER	36
5.	EMISSIONS FROM THE RESIDUUM HYDRODESULFURIZER	39
6.	EMISSIONS FROM THE DEBUTANIZER (STABILIZER)	40
7.	EMISSIONS FROM THE NAPHTHA SPLITTER (OPTIONAL)	41
8.	EMISSIONS FROM THE CATALYTIC REFORMING UNIT	44
9.	EMISSIONS FROM THE DEPENTANIZER	45
10.	EMISSIONS FROM THE ISOMERIZER UNIT	49
11.	EMISSIONS FROM THE LPG PLANT	51
12.	EMISSIONS FROM THE OPTIONAL MEROX UNIT	51
13.	EMISSIONS FROM THE SULFUR PLANT	60
14.	EMISSIONS FROM THE STEAM GENERATORS	61
15.	MISCELLANEOUS HREC EQUIPMENT EMISSIONS	62
16.	EMISSIONS FROM THE FLARING SYSTEM	65
17.	EMISSION FROM OIL-WATER SEPARATION	71
18.	EMISSIONS FROM SLUDGE INCINERATION	78
19.	EMISSIONS DUE TO CRUDE OIL UNLOADING	83
20.	CASE I - MARKETING SCHEME	91
21.	CASE II - MARKETING SCHEME	92
22.	EMISSIONS FROM HYDROCARBON STORAGE	93
23.	PUMPS, COMPRESSOR AND IN-LINE SPARES	94
24.	PARTICULATE SOURCES	98
25.	SULFUR OXIDES SOURCES	101
26.	NITROGEN OXIDE (AS NO_2) SOURCES	103
27.	HYDROCARBON SOURCES	106

TABLE OF CONTENTS (continued)

LIST OF FIGURES

Figure		Page
1.	PROPOSED HREC REFINERY	3
2.	DIAGRAM OF SIMPLE UNCOLLED PACKED SEAL	9
3.	DIAGRAM OF SIMPLE MECHANICAL SEAL	9
4.	LABYRINTH SEAL	11
5.	OIL FILM SEAL	12
6.	FLANGES	14
7.	RELIEF VALVE	17
8.	TYPICAL RUPTURE DISC INSTALLATION	19
9.	LIGHT COMPONENTS SEPARATION	69
10.	HEAVY COMPONENTS SEPARATION	70
11.	MULTIPLE-HEARTH SLUDGE INCINERATOR	75
12.	REFRIGERATION VAPOR RECOVERY UNIT BY EDWARDS	88

SECTION I. INTRODUCTION

The purpose of this report is to evaluate the air pollution potential of the proposed Hampton Roads Energy Company (HREC) Petroleum Refinery to be constructed in Portsmouth, Virginia. This study is based on the best information available on the plans and intentions of the developers, and is therefore necessarily limited to discussions of likely process units and equipment and to formulations of emission estimates based upon units "typical" of the type anticipated. HREC has not completed detailed engineering design specifications, and appears uncertain as to how crude oil will be received and marketed at this time. For this reason it is not possible to describe and analyze in detail the specific units and operations to be ultimately constructed at the refinery.

A representative of HREC has reported to PES that it is reluctant to invest the three to four million dollars required for the engineering design units until they are confident that the project will be approved by the Environmental Protection Agency (EPA). HREC is also reluctant to sign a long-term contract committing themselves to receipt or delivery by a specified date while the construction is still in doubt. The shipping and receiving of materials into the refinery, therefore, are limited to general assumptions to allow calculations of emissions at various points. All such assumptions necessitated by the absence of information are carefully detailed in the text.

The refinery site is located along the west bank of the Elizabeth River due west of the City of Norfolk. The HREC facility is what is termed a "grassroots" refinery. The term grassroots pertains to the fact that this refinery is being built from the ground up. There are currently no buildings or structures on the proposed site. The refinery site consists of 623 acres of undeveloped land. The planned refinery will immediately occupy 470 of the 623 acres

with processing units, tank farms, and storage, administration and other buildings. A marine terminal is to be operated in conjunction with the refinery. The main unloading platform will be offshore approximately 2,700 feet. The proposed product barge terminal, consisting of two piers, will be located about 600 feet offshore. A vapor recovery system is planned for the barge terminal. The refinery has been designed to operate at a capacity of 175,000 barrels of crude oil per day. The refinery site has additional space to allow eventual expansion of the refinery capacity to 250,000 barrels per day.

The complex will be managed under two legal names. HREC will own and operate the refinery processing equipment and the intermediate storage of products such as atmospheric gas oil and residuum. The unloading and loading terminals and all crude oil and product storage will be owned and operated by a company called Security Marine Terminal (SMT).

Crude oil will enter the refinery at the SMT unloading facilities by ocean-going tanker. The crude oil will be unloaded into 11 crude oil storage tanks located on SMT property, and will be transferred by pipe line to the HREC processing units.

A flow diagram of the proposed HREC facilities is shown in Figure 1. The crude oil is charged to the atmospheric distillation column at the rate of 175,000 barrels per day. After being passed through a two-stage electrical desalter, the crude oil is fractionated in the distillation column into six main cuts. The overhead cut consists of naphtha and all lighter fractions. The non-condensibles from this stream is routed to the refinery fuel gas system via the LPG plant, and condensible portions of this cut is sent to a naphtha hydrodesulfurizer. In this desulfurizer the naphtha feedstocks are treated with hydrogen for removal of sulfur compounds. The gases generated in this process are amine stripped for removal of H_2S, and this hydrogen-rich gas is routed to the sulfur plant.

Reproduced from best available copy.

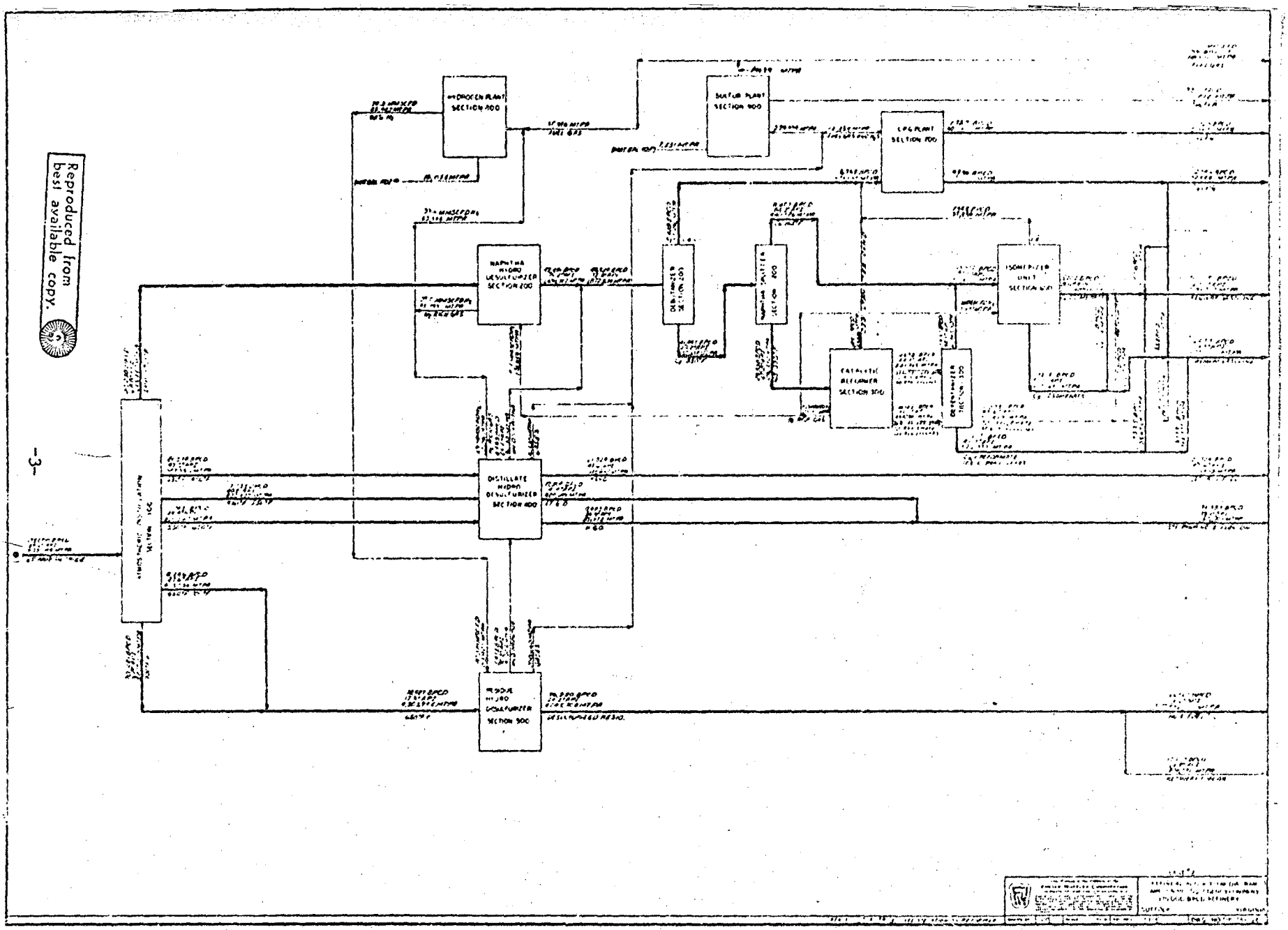

Figure 1. PROPOSED HREC REFINERY

The treated liquid product is sent to the debutanizer and the extracted butane is routed to a liquid petroleum gas (LPG) plant. The debutanized naphtha is sent to a naphtha splitter for further fractionation, while the overheads are routed to the isomerization unit for preparation of gasoline. Isomerization upgrades the octane numbers of pentane and hexane by rearranging the molecular structure of the hydrocarbons from straight-chain compounds to branched-chain compounds.

The bottoms from the naphtha splitter are routed to a catalytic reformer which produces aromatics and upgrades low octane naphthas. The process produces a large amount of hydrogen gas which is routed to either the naphtha hydrodesulfurizer or the isomerization unit. The reformer side streams are sent to a depentanizer. The overheads from this unit are mixed as a feedstock for the isomerization unit while the bottoms are blended to form various grades of gasoline.

The top three side cuts from the distillation column, kerosene, light gas oil, and heavy gas oil, are routed through the distillate hydrodesulfurizer. Only one of the three products will be run through the distillate desulfurizer at any one time. To handle the buildup of each of the three materials which will collect, HREC will build intermediate storage tankage on the refinery site. After passage through the desulfurizer, the kerosene is sent to final storage to be marketed as Jet A-1 fuel, and the light and heavy gas oils are blended to form a No. 2 fuel oil. A "wild" naphtha (overheads from the distillate and residuum hydrodesulfurizers) is produced in this process which is blended with the desulfurized naphtha and sent to the debutanizer. Overhead gases are routed to the LPG plant.

The lowest of the four side cuts is blended with atmospheric residuum and routed to the residuum hydrodesulfurizer. This treatmetn process results in three products. An overhead gas stream,

after being amine stripped of H_2S, is sent to the LPG plant. Wild naphtha is routed to the distillate hydrodesulfurizer and finally enters the gasoline processing lines. The desulfurized residuum contains approximately 0.3 percent sulfur by weight and is marketed as No. 5 fuel oil. A portion of this fuel oil is sent to storage to be used as refinery fuel oil.

The refinery has many potential sources of emissions. All of the major process units are operated under extremes of temperature and pressure. Leaks from such a system must be kept to a minimum. In addition to resulting in losses of material, a leak can cause a deterioration of the process's desired operating environment which results in higher operating costs. Emissions also result from the transfer of materials about the refinery. Pumps, seals, flanges and pressure relief valves are all hydrocarbon emission sources which are difficult to quantify. Other major sources of hydrocarbon emissions are storage tanks, the marine terminals (loading and unloading), truck or tank car loading racks (primarily LPG racks), and oil-water separation and treating facilities.

Combustion contaminants (particulates, sulfur oxides, nitrogen oxides and hydrocarbons) are produced in the various process heaters and steam generating facilities and the emergency flares.

The remainder of this report presents a detailed description of the sources of emissions at the refinery and a discussion of the work completed as well as the work prepared for this report. Section II provides a discussion of each unit, identifying sources of emissions. A comparison of the emissions calculated by Foster Wheeler Energy Corporation (FWEC) and Pacific Environmental Services, Inc. (PES) appear as Section III. Section III also discusses discrepancies which appear between calculations performed by FWEC and PES. Section IV presents a qualitative view of the proposed

refinery, stressing the types of equipment proposed and the PES opinion of best available control technology. Section V compares and quantifies the emission potentials of various control strategies which may result.

SECTION II. EMISSION SOURCES

There are many sources of emission at a refinery. The first section discusses the various types of refinery equipment which will be common to the proposed process units. The following sections discuss each unit in detail, explaining the process, and identifying and quantifying emissions from that unit.

A. REFINERY EQUIPMENT

1. Pumps

A refinery uses many different types of pumps to move fluids. Pumps vary in capacity up to 100,000 gallons per minute and in pressure differential up to 30,000 pounds per square inch. A pump is designed to perform a specific function, and is limited to a rather narrow range of operation above and below the design condition. For this reason, hundreds of pumps of different styles and modes of operation are used. The types most often used in refineries fall into two broad categories: centrifugal and positive displacement devices. Centrifugal devices can be classified as volute, axial, and turbine pumps. In general, centrifugal fluid-transport devices have the following characteristics: (1) discharge is relatively free of pulsation; (2) the mechanical design lends itself to high through-puts, which means that capacity limitations are rarely a problem; (3) they are capable of efficient performance over a wide range of pressures and capacities even at a constant-speed operation; and (4) discharge pressure is a function of fluid density.

Positive displacement devices are characterized as reciprocating piston, plunger, diaphragm, rotary vane, and gear pumps. The large variety of displacement-type fluid-transport devices makes it difficult to list characteristics common to each. However, for most types it is correct to state that: (1) they are adaptable

to high-pressure operation; (2) discharge of many will pulsate unless an auxiliary damping system is employed; (3) mechanical considerations limit maximum through-puts; and (4) they are capable of efficient performance at extremely low-volume through-put rates.

Asphalts and other semi-solids, such as distillation column residuum, are handled with reciprocating steam pumps because they can, up to their limit, develop full pressure and can sometimes dislodge even solid material from the line. Centrifugal pumps are generally involved in the handling of large amounts of medium and lower viscosity products.

The operation of both types of pumps are potential sources for the emission of hydrocarbons and odorous substances such as hydrogen sulfide or mercaptans. The opening in the cylinder or fluid end through which the connecting rod actuates the piston is the major potential source of contaminants from a reciprocating pump. In centrifugal pumps, normally the only potential source of leakage occurs where the drive shaft passes through the impeller casing.

There are primarily two methods of sealing or minimizing the emissions from a pump. These are by packed or mechanical seals. Packed seals can be used on both reciprocating and centrifugal pumps. Figure 2 shows how a packing seal operates. A more effective form of control is a mechanical seal, a device which currently can only be applied to pumps that have a rotary shaft motion. A simple mechanical seal consists of two rings with wearing surfaces at right angles to the shaft (Figure 3).

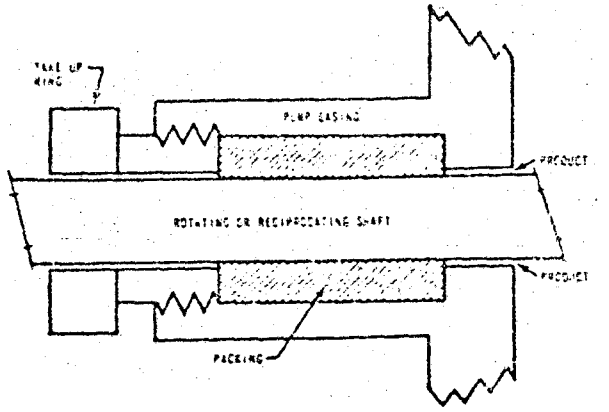

Figure 2. DIAGRAM OF SIMPLE UNCOOLED PACKED SEAL

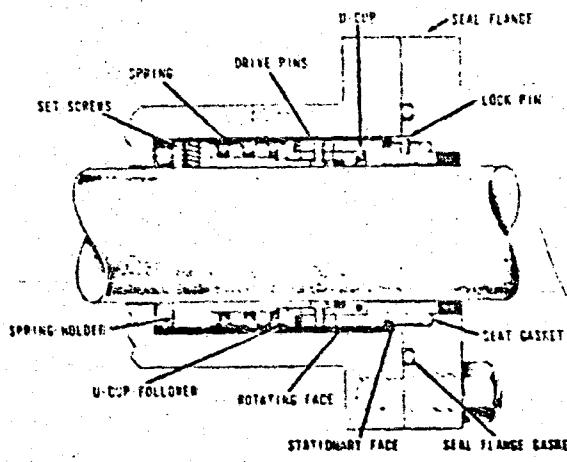

Figure 3. DIAGRAM OF SIMPLE MECHANICAL SEAL

One ring is stationary while the other is attached to the shaft and rotates with it. A spring and the action of fluid pressure keep the two faces in contact. Lubrication of the wearing faces is effected by a thin film of the material being pumped. The wearing faces are precisely finished to ensure perfectly flat surfaces. Materials used in the manufacture of the sealing rings are many and varied. The basic design of the mechanical seal has not been altered significantly over the years, however, recent

technological advances have been made in the materials used in seals. Today, single mechanical seals are capable of replacing double mechanical seals without a reduction in control efficiency due to new plastic and synthetic rubber materials which have solved many of the static sealing problems encountered with older materials.

With modifications, the mechanical seal can be considered to be the best available control technology (BACT) for a centrifugal pump. All centrifugal pumps in hydrocarbon service at the HREC refinery will be equipped with mechanical seals. Centrifugal pumps handling water will be equipped with packed seals. A reciprocating pump is planned for the emergency pump from the flare knockout drum and will be equipped with double outboard seals. An outboard seal utilizes packing, and is situated on the exterior of the pumping mechanism. Since the packing is soft and flexible, its operating lifetime is shorter than a mechanical seal. Although there are different designs of packed seals, all have in common the concept of a piston and cylinder, or a ring and gland holding the packing material. As pressure is applied to the piston or packing ring, the packing material is compressed along the piston shaft longitudinal axis. This applied pressure forces the packing material against the seal housing and the moving shaft. As more pressure is applied to the packing material, it develops a pressure greater than that of the pumping fluid resulting in no leakage. Using this principle, a double outboard seal is two sets of seals combined in one housing. The existence of a barrier fluid for improvement of the sealing process would be unlikely. Due to the softness and flexibility of the sealing mechanism any fluid in the zone between the two outboard seals would have a tendency to escape.

2. Compressors

The only type of compressors planned for the HREC refinery are centrifugal units, with the possible exceptions of a reciprocating unit compressing air and a reciprocating compressor on the hydrodesulfurization units handling hydrogen-rich streams. These reciprocating compressors would be equipped with ring packing and any escaping gases would bleed off to the flare.

The low pressure centrifugal compressors will be equipped with a labyrinth seal used to prevent loss of gas (see Figure 4). The seal consists of a number of restrictions and openings through which the escaping gas must flow. The labyrinth seal is normally vented at some midpoint and bled back to a lower pressure stage or to the compressor suction.

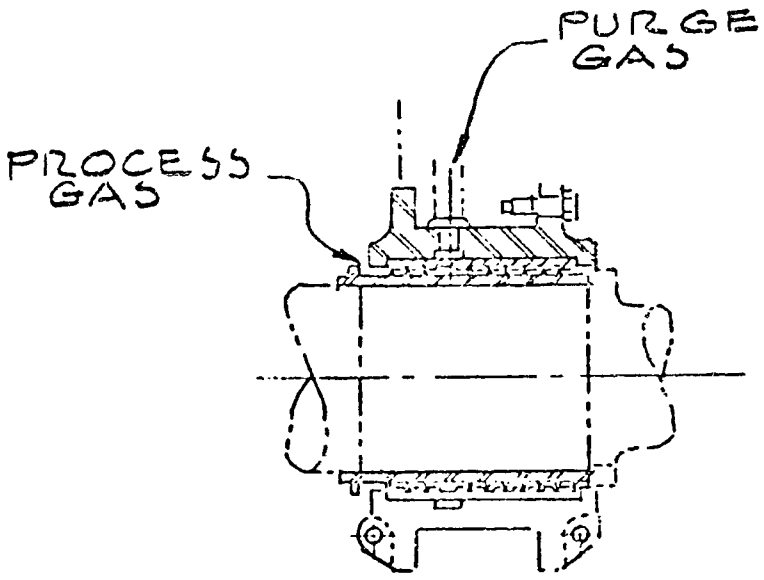

Figure 4. LABYRINTH SEAL

The majority of the centrifugal compressors will have oil film seals. An oil film seal is a modification of the mechanical seal which is so successful that it needs very little attention. It is constructed like a mechanical seal but the wearing faces are held apart while the machine is running (Figure 5). The reason there is no wear is that the oil pumped between sealing faces does the actual sealing. The oil pump is driven by the compressor shaft at the other end of the machine. Faces come together and hold almost a perfect vacuum when the machine is shut down.

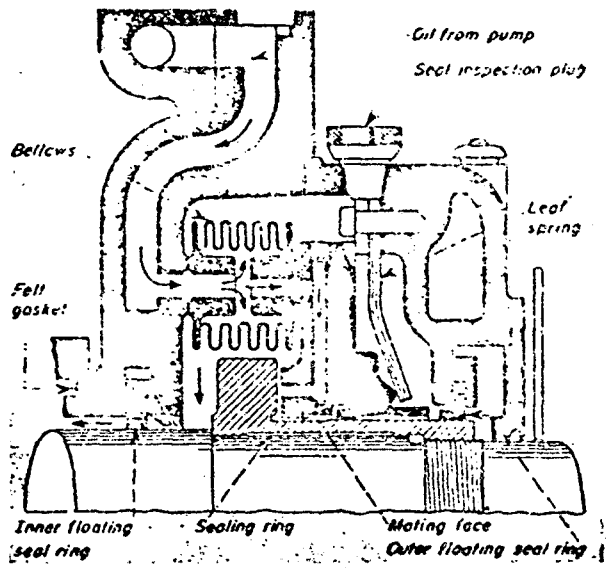

Figure 5. OIL FILM SEAL

The operation of an oil film seal is as follows: when a compressor starts, oil is pumped through internal passages in the compressor. Oil flows through a filter and to the inside of the doughnut-shaped seal bellows. Oil pressure expands the bellows, moving the stationary sealing seat against spring pressure to the stop position on the seal housing. The oil in the bellows then passes through drilled passages in a stationary seal to an irregu-

lar oil groove in the face of a stationary sealing seat. The oil flows across an outer section of the stationary sealing face and into the space between the shaft and the bellows assembly. Flow from this space is restricted by an inner floating ring. The flow continues across the inner section of the sealing face and through clearances between the rotating sealing-seat-hub and the stationary sealing seat. This flow is restricted by the close clearance of the floating ring between these two parts. It is also restricted by atmospheric or outer floating rings between the seal housing cover and the rotating seal hub.

The pressure-regulating valve in the oil system remains closed on starting. Thus, full capacity of the oil pump is assured for initial oil supply. During operation, the oil passing between the seal faces seals the shaft against inward leakage of air so metal-to-metal contact is not needed to do the sealing.

In spite of the use of oil seals, Foster Wheeler anticipates a gas leakage rate of approximately 50 SCFM/compressor from the drain trap. This gas is expected to be composed of 80 to 90 percent hydrogen. If the compressor is involved with non-contaminated service (without sulfurous compounds) it will bleed directly to the flare system. Contaminated units will be amine stripped prior to venting to the flare system.

Some of the compressors will handle material which must remain oil free (such as makeup units handling hydrogen destined for the hydrodesulfurization units). Such a compressor would be equipped with a simple mechanical seal.

3. Flanges

Flanges provide a removable connection between pipe and vessels or other items of equipment. Flanges are specified by pressure rating and by facing. Pressure ratings used are: 150, 300, 400, 600, 900, 1500 and 2500 psi. The most common flange facings are flat face, raised face, tongue and groove, and ring

joint (see Figure 6). It is important that two opposing flanges have the same rating and facing. If mismatched flanges are connected together, there is a good possibility that the joint will warp and leak.

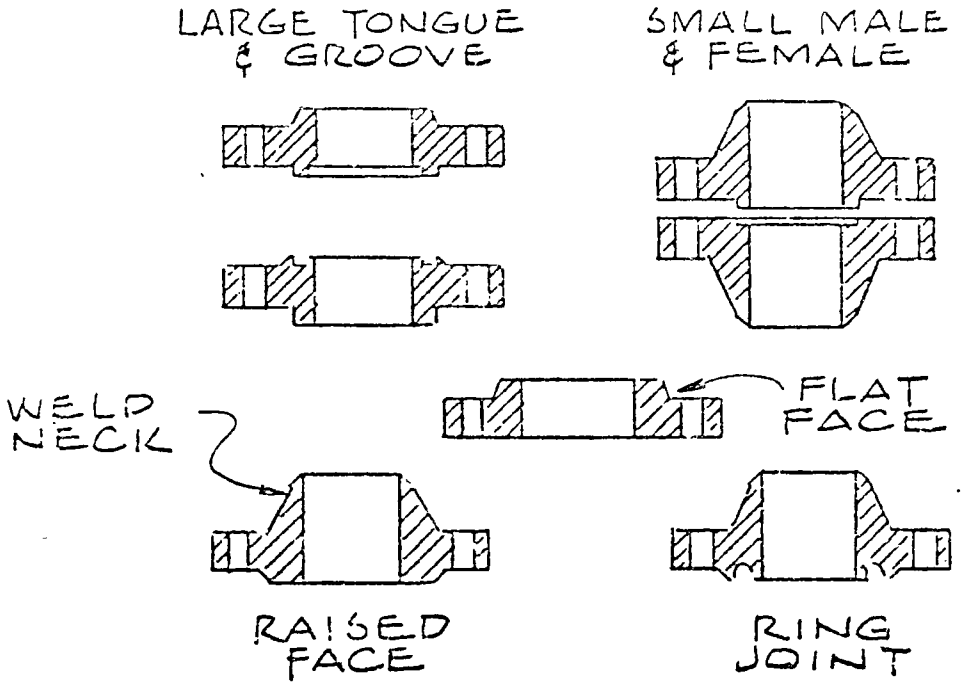

Figure C. FLANGES

Foster Wheeler (FWEC) has indicated that they will exercise excellent engineering practices when designing for the use of flanges in a refinery. Foster Wheeler's basic policy is to minimize the use of flanges. Each flange is placed where it can be reached by a workman for easy replacement of gasketing. FWEC has installation and operating procedures which minimize the scratching on the flange surface. Each bolt is torqued to a designated specification.

Of the types of flanges commonly used, FWEC prefers the ring joint because it causes less problems. Many types of gasketing are used, but in high pressure systems (with the greatest emission potential), where coping with temperature and pressure fluctuations can be a problem, FWEC uses what they call "flexitalic" joints and gaskets. Flexitalic units combine metal with asbestos to provide a flexible unit which is resistant to temperature and pressure extremes. When a section is flanged, the ring joint consisting of an asbestos center surrounded by a metal casing, is placed between the flanges so that when bolting occurs, the ring will expand to fill the space. These units are subject to deterioration. The asbestos wears out after awhile and the temperature differentials cause the metal to flex. Proper maintenance and inspection to ensure all units are tightened can significantly reduce the emissions from flanges.

4. Blinds

A refinery will, on occasion, find it necessary to utilize blinds. A blind is a flat solid piece of steel which can be inserted in a flange to form a solid seal in a line. The insertion of a blind instead of the turning of a valve is necessitated at times of repair shutdown for reasons of safety and insurance against contamination The presence of a blind in a line eliminates the danger of an inadvertent opening of a valve which could result in injury or contamination.

Blind changing is usually performed by a mechanic and requires between 15 and 20 minutes for insertion. The recommended procedure is as follows: the bolts connecting the flanges are loosened and a flange chisel made out of brass or other non-sparking material (to reduce the danger of explosion) is driven into the connection, wedging a gap. When the blind is inserted and the wedge removed the bolts are tightened, locking the blind firmly in place.

5. Valves

Valves are employed in every phase of the petroleum industry where petroleum or petroleum product is transferred by piping from one point to another. There is a great variety of valve designs but, generally, valves may be classified by their application as flow control or pressure relief.

Manual and automatic flow control valves are used to regulate the flow of fluids through a system. Included under this classification are the gate, globe, angle, plug and other common types of valves. All of these valves tend to leak through the valve seat when handling low viscosity fluids and/or when the pressure differential across the valve is large. Where a single valve is used to separate a material that is considered a pollutant from the environment, the outlet of the valve is usually closed with a blind flange, a blind, or a plug, to ensure that the material does not escape.

The second major source of valve leakage is the packing that is used to seal the valve stem. This packed joint must slide along the valve stem as the valve is opened and closed. A regularly scheduled program of inspection to ensure that valve stem packings are properly maintained will aid in preventing leakage to the atmosphere.

All control valves and connections will be held in place by flanges. The stems of these valves will be packed to reduce hydrocarbon emissions. The type of packing used will depend upon the operating temperature of the process. Up to 450°F, the valve stems will use a self-lubricating packing. For operating temperatures

above 450°F, the valve stems will use teflon asbestos or asbestos with a grease seal.

Certain (non-specified) block valves in light ends service will be equipped with a new vented packing which will vent to the flare system.

Pressure relief valves (Figure 7) are used to prevent excessive pressures from developing in process vessels and lines. These valves may develop leaks because of the corrosive action of the product or because of failure of the valve to reseat properly after blowoff. The maintenance and operational difficulties caused by the inaccessibility of many pressure relief valves may allow leakage to become substantial.

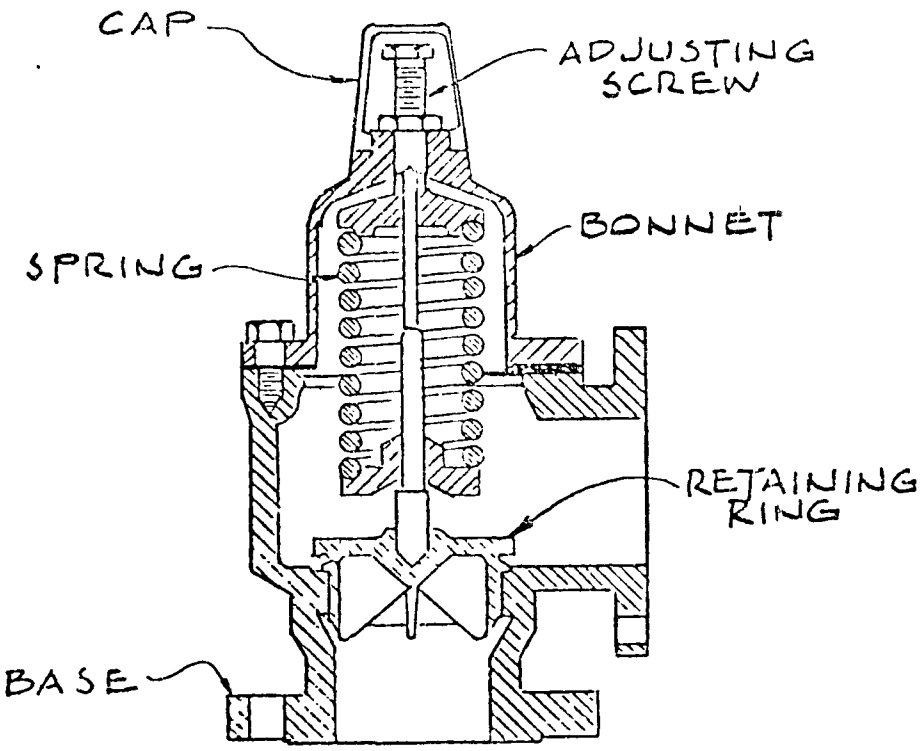

Figure 7. RELIEF VALVE

Relief valves may be installed for relief of gaseous or liquid pressure. The liquid relief devices are normally installed to relieve thermal expansion and are less inclined to leak than vapor relief devices.

The most common type of relief valve is spring-loaded. In a typical spring-loaded relief valve, fluid pressure is maintained in the throat of the valve. If the operating pressure exceeds the valve set pressure, the valve will open and relieve the system pressure.

Most relief valves achieve a seal by forcing a metal plate against a metal seat. These seats are durable, but tend to leak. A more effective seal can be achieved by use of an "O" ring or plastic seat where process conditions permit their use.

Relief valves are normally set to activate at a pressure that is a maximum of 10 percent or 25 psi above the normal operating pressure of a vessel. If the operating pressure is too close to the set pressure, the valve will tend to lift off the seat during normal operating cycles with resultant discharge of material through the valve and possible damage to the valve seat. These fluctuations in operation which cause this unseating can occur up to 50 or 60 times a minute. This occurrence is known as "chattering."

Most of the relief valves will vent to the flare system. Due to the location and type of material handled (not specified), it will not be practical to run flare system ducting to all relief valves. These valves will be equipped with rupture discs.

The rupture disc or burst diaphragm (Figure 8) is a metal diaphragm which is designed to rupture at a predetermined pressure. By placing such a disc ahead of a relief valve, chattering and its resultant emissions can be eliminated. This vapor-tight seal may not remain in perfect condition. It is possible for the disc

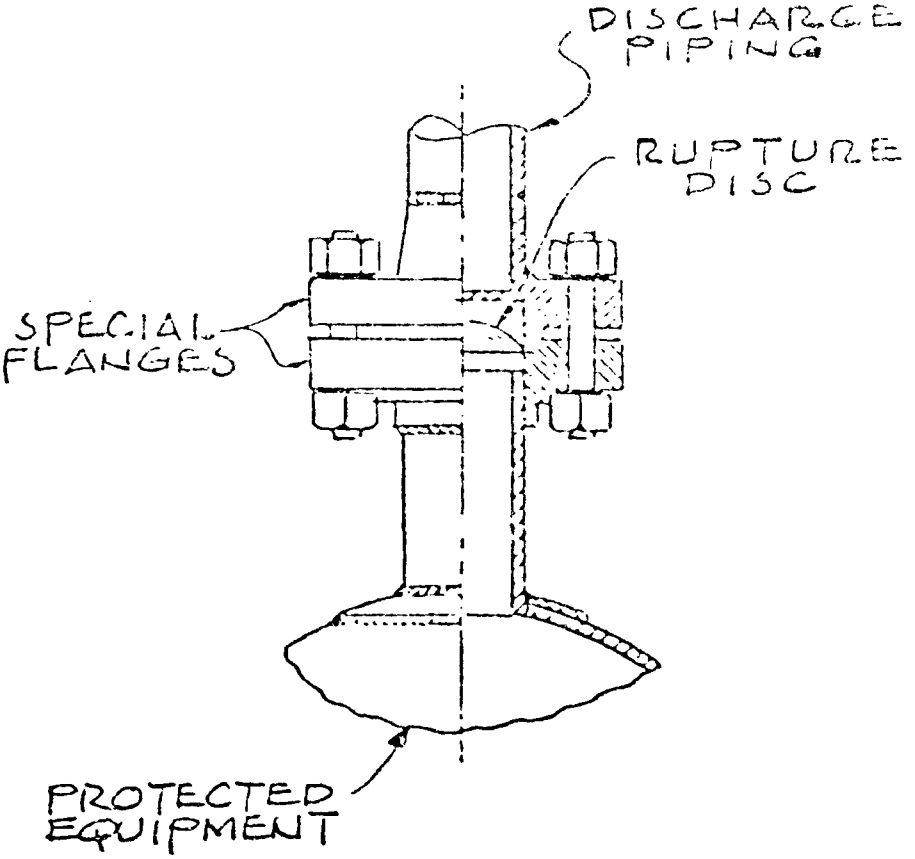

Figure 8. TYPICAL RUPTURE DISC INSTALLATION

to develop a pinhole leak due to atmospheric or internal corrosion. If such a leak should develop, the product material would be controlled only by the relief valve. Pressure gauges are generally used to indicate such a condition. Frequent inspections are made by the operators and corrective maintenance performed as soon as possible. Chattering valves must be checked for signs of valve seat damage and rupture disc valves must be viewed for small leaks.

FWEC states that a non-chattering valve is now available from manufacturers. In principle, such a valve is equipped with a bypass system. After the valve relieves once, all other surges vent via the bypass system. It will then become necessary to find somewhere to vent this bypass system. This system would not be of any additional benefit for the valves situated away from the flare system ducting. Such a valve would have to have a rupture disc in any event. Therefore, it is felt that installation of these new valves will not cause an improvement in emission control over the planned system. Inadequate information is available to compare the increased initial cost of non-chattering valves with the higher maintenance costs associated with chattering valves.

6. In-Line Spares

In the operation of a refinery, it is extremely important that processes operate as much of the time as is possible. In order to minimize down-time caused by equipment malfunctions, the refinery is usually designed with in-line spares. An evaluation of the number of in-line spares can provide a qualitative assessment of the hydrocarbon potential from malfunction.

The lack of a spare on an important unit, such as the crude oil pump, could cause operation to continue during a leakage condition resulting in more hydrocarbon emissions than would result if this pump had an in-line spare. Existence of this spare would allow switching of the product line with minimal disturbance to the process operations while the normal pump is repaired. In de-

termining which refinery equipment requires in-line spares, the important consideration to be made is whether the loss of that particular pump or compressor would cause an immediate shut-down of the associated operating unit. In the case of the affirmative, the equipment would require a spare. A prime example of equipment needing an in-line spare is a unit feed pump. In-line spares for pumps handling product and side-streams are not as essential since a refinery has more flexibility in the handling of the products than in the feed.

There are several practices which can be utilized to minimize emissions resulting from switching to an in-line spare. A recommended procedure is to switch operation from the normal pump to the spare once a week and operate the spare for approximately 24 hours. This ensures refinery personnel tht the spare will be operable in the case of emergency switchover. This procedure also allows maintenance crews to perform any work necessary on the normal pump. It is a recommended practice that if the normal operating pump is electric that the spare be a steam turbine operated unit with a small amount of steam constantly circulating to maintain the pump at a heated temperature. The use of a steam turbine spare ensures continuous operation in the case of a power outage.

Table 23 on page 94 at the end of this section itemizes each pump and compressor and whether or not a spare for this unit is anticipated.

7. Maintenance Practices

In a modern day refinery, management makes every effort to keep losses from faulty equipment at an absolute minimum. The two primary reasons are economics and ecology. Crude prices three to six times the previous levels have forced all employees to concentrate on keeping these raw materials or refined products from escaping.

The best approach to detection of operational losses is frequent inspection by qualified personnel. Supervisory personnel, such as operating day foremen and shift foremen are constantly in touch with the crews that operate the plants. They establish the rules and schedules by which the crews make routine inspections. The crews are constantly in circulation over the entire plant each 24 hours. As an example, the day foreman will leave an order that each tell-tale sampler on each product cooler (oil-water heat exhangers) must be checked twice each shift. This is done by tapping a bleeder line from the water outlet and drawing a sample into a container which is set aside. In the event that there is an oil leak through the tubes into the water, oil will appear on the surface after a few moments. Action will then follow for removal of the unit from service and making the necessary tests and repairs. Other in-plant lines, valves, pumps and equipment not functioning properly or leaking are corrected immediately, if possible. If the unit operator is unable to correct the problem, it is reported to the head operator who informs the day foreman for inclusion of the malfunction on the repair list for the next shutdown.

For example, if a packing gland on a pump is leaking badly, the unit operator would report this to the head operator as quickly as possible. He obtains a mechanic who reports immediately. The pump is switched to the spare and the leaking gland fixed. If the pump cannot be removed from service, the day foreman will evaluate whether the plant has to be shut down immediately or is able to operate until a scheduled shutdown occurs.

The number of leaks that occur which cannot be repaired immediately or within a few hours are relatively few in number and small in magnitude.

Standard procedures in almost every refinery these days is to maintain a "leak detective" and a team of water and air pollution specialists. These people work full time tracing sources of odors, excessive oil in the separators, and other indications that there is a leak or leaks which may not be immediately obvious.

For pipelines off the premises, a line-walker is sometimes utilized. He physically walks the full length of the line at least once each day. Lines are not buried to any great extent in modern refineries, if it is at all practical to avoid it.

In addition to the surveillance and control of hydrocarbons, a refinery must be careful to control the emission of a very dangerous and poisonous gas produced during refinery processes--hydrogen sulfide (H_2S). The HREC refinery will have area monitors stationed about the premises with H_2S analyzers (designed by API) tied into an alarm system to aid in early detection of this toxic gas.

8. Combustion Units

The combustion units will be equipped with burner controls in the form of excess oxygen control. Continuous opacity monitors will be installed on every stack. The type of monitors planned will be laser sensing devices.

Combustion units will consist of steam generating units and process heaters, each capable of firing a combination of oil and gas. Steam requirements for the refinery are not precisely known but are expected to be approximately 500,000 pounds per hour. Steam will be generated in three steam generators, each capable of supplying one-half of the total demand. The existence of 50 percent standby boiler capacity is a recommended refinery practice to ensure a more continuous operation. Two levels of

steam have been selected for the refinery. Medium pressure superheated steam will be generated at 250 psig and 500°F. Low pressure steam from turbine exhaust will be at 50 psig. Low pressure steam requirements in excess of the turbine will be supplied by letting down 250 psig steam to 50 psig.

The formation of oxides of nitrogen is a by-product of the normal combustion processes that occur in process heaters and boilers in a refinery. There are seven known oxides of nitrogen: N_2O, NO, N_2O_3, NO_2, N_2O_4, N_2O_5, and NO_3. Some of these are very unstable at room temperature or below. There are only two of the above which are important from an air pollution standpoint: NO and NO_2. Any mixture of nitrogen and oxygen subjected to temperatures over 2800°F up to about 4000°F will produce NO according to the reaction:

$$N_2 + O_2 + 43{,}000 \text{ calories} \rightarrow 2\ NO$$

NO will decompose back to N_2 and O_2 if cooling back to below 2800°F is done at a rate slower than 30,000°F per second. However, in most combustion situations, the cooling rate will be much faster than this and the NO will remain fixed.

The steam generating units at HREC will make use of a technique called two-stage combustion to reduce nitrogen oxides emissions. Two-stage combustion consists of bypassing a percentage of the combustion air from the burner to injection ports in the bulk gas region downstream of the primary chamber. The ports are popularly called "NO ports." A portion of combustion air is admitted at the burner as usual, but the remainder is added downstream. Usually 90 percent of the necessary theoretical air is admitted with the fuel. This results in a reduction in the amount of oxygen available near the burner for fuel air mixing, hence the amount of oxygen available for fuel bound nitrogen is also reduced. The

fuel not oxidized in the primary zone is burned in the bulk gas zone where temperatures are lower due to heat loss to the combustion wall and macroscale mixing with the cooler gases in the fire box. The net result is a slower rate of cooling which helps inhibit the fixing of the NO.

Foster Wheeler representatives stated that while two-stage combustion is available for a boiler, the technology and engineering is not available for process heaters. The examiners were curious as to why a two-stage combustion system had not been developed for a process heater since the same concepts of combustion, consisting of a fire box and tubes, are much the same as in a boiler.

Several industrial process heater manufacturing sources were contacted to find out if there are any limiting factors preventing the two-stage combustion concept being used in process heaters. The sources (who have requested that they remain anonymous) stated that in the past, most process heaters were designed primarily to heat the process material to within desired specifications, and that fuel economy and pollution control were often lower priority considerations. Until recently, there was insufficient incentive produced by environmental agencies to warrant NO_x reduction specifications in process heater design from industrial customers. With the advent of stricter emission standards, however, industrial customers have now begun to request lower NO_x emission level combustion devices. Burner and process heater manufacturers are responding to these customer requests and are in the preliminary design stages of systems which will accomplish this goal.

Most sources of information agreed that two-stage combustion could be applied to a process heater although problems may be caused by the fact that the physical size and location of the unit and the extra ducting needed to support the combustion process could not always be accommodated. No one had knowledge of any unit currently on the market.

One source contacted mentioned that John Zink was currently experimenting with a NO_x reduction program for process heaters. Although specific details were not available, the approach uses a fuel-rich primary combustion zone and ducting which recirculates waste gas from the bulk gas region of the fire box. The recirculated gas is vented through a specially designed burner.

Preliminary results of the experiments show a significant decrease in NO_x concentrations in the flue gas. Although John Zink has been hesitant to explain further at this time, unofficial figures released have indicated that NO_x emissions of 0.2 pounds/10^6 BTU for liquid fuel and 0.1 pound/10^6 BTU for gaseous fuels could be expected.

A problem which has been encountered with the two-stage combustion approach stems from the fuel-rich primary combustion zone. When this mixture is used in a fire box, there is an excess of carbon present as soot. Since these heaters do not have soot blowing capabilities, there is a tendency for the carbon to accumulate on the tubes, changing the designed heat transfer coefficient. As the carbon collects, hot-spots are formed on the outside of the tube walls. These hot-spots eventually burn through the tube necessitating a process heater overhaul.

In addition to two-stage combustion there are other means of reducing NO_x emissions. (1) Reduction of excess air will inhibit the production of NO_x. The less oxygen available near the burner, the lower the possibility of conversion of fuel bound nitrogen. (2) Flue gas recirculation and reduced air preheat help reduce the peak temperature of the primary zone. Flue gas recirculation also aids by recirculating gases low in unformed nitrogen and oxygen. Reduced air preheat is not popular because it causes a reduction of the combustion efficiency and does not limit the available oxygen.

The most popular alternate form of nitrogen oxide control is off-stoichiometric combustion. This method of combustion uses to advantage multiburner configurations in the fire box. No extraneous ducting or modification is required since the procedure involves running various burners on air only, and the remaining burners fuel-rich. Some fuel escapes contact (hence reaction) with the air in the primary zone, and is combusted in the cooler bulk gas recirculation zone. Although the overall stoichiometry (chemical coorectness) is maintained, the procedure effectively reduces the amount of fuel and air interacted close to the burner face, extending instead a substantial portion of the mixing and burning into the secondary zone. A problem which requires special consideration is the fact that carbon monoxide emissions can increase for some combinations of fuel-rich burners. The most effective combination of air-only burners and fuel-rich burners can only be determined by trial and error.

Each of the following refinery process units utilizes some if not all of the refinery equipment or techniques already mentioned. Each subsection consists of a brief description of the type of process involved followed by an inventory of each emission point in that process. Each subsection concludes with a table summarizing the estimated emissions from that process. All calculations and assumptions used to develop the tables are discussed in noted appendices at the rear of the report.

B. CRUDE UNIT

Crude oil enters the HREC refinery by way of the Security Marine Terminal unloading facilities and storage tanks. HREC was unsure of the exact crude oil characteristics at the time of the information gathering trip associated with this project. When FWEC made their study, they worked under the assumption that the crude oil to be handled would be a light Arabian weathered type with a Reid vapor pressure of less than two, a sulfur content of 1.7 per-

cent by weight, and a 34.2° API gravity. A weathered crude has been exposed to the amtsophere or low pressure systems for a sufficient time to allow a portion of the gaseous hydrocarbons dissolved in the crude oil to have been lost.

From tankage, the oil with a maximum arrival temperature of 105°F, is preheated by exchange with the hot crude unit products to about 250-300°F, and then desalted. Desalting removes salt, silt, sand, water, and other crude oil contaminants referred to as B.S. and W (bottom sediments and water). Foster Wheeler plans on installing a two-stage electrical desalter. In this type of unit crude oil is mixed with water and chemicals and is passed through electrical fields which cause coalescence of the contaminant droplets. The sour water collected by the desalter is drained to the sour water stripper. After treatment, the water is returned as desalter makeup water.

The desalted crude oil is passed through booster pumps which transport the crude oil through more heat exchangers and through the crude furnace. The temperature of the oil coming out of the furnace is typically 650-700°F. From the furnace, the crude oil passes to the crude distillation column. Light naphtha and other products are captured in the overhead condenser. The non-condensibles are routed to the refinery fuel gas system by way of an amine stripper for use in the combustion units or as feed to the hydrogen plant. The condensible overheads are routed to the naphtha hydrodesulfurizer. The four side-streams are: heavy naphtha, kerosene, light fuel oil and heavy fuel oil. The top three streams go to the distillate hydrodesulfurizer. The heavy fuel oil is blended with distillation residuum and routed to the residue hydrodesulfurizer.

The points of potential emissions include the crude heater, (which will exit through Stack #3), relief valves, pumps, compressors, control valves and flanges. Emissions from various units of the crude distillation unit are presented in Table 1.

Table 1. EMISSIONS FROM THE CRUDE UNIT (TPY)*

CONTAMINANT / SOURCE	PARTICULATES		SULFUR DIOXIDES		NITROGEN OXIDES		HYDROCARBONS	
	Uncontrolled	Controlled	Uncontrolled	Controlled	Radian	AP-40	Uncontrolled	Controlled
Crude Heater	116.2	116.2	547.2	547.2	896.3	941.1	50.1	50.1
Relief Valves	-----	-----	------	------	------	-----	31.9	-0
Control Valves & Flanges	-----	-----	------	------	------	-----	81.4	81.4
Pumps & Compressor	-----	-----	------	------	------	-----	13.7	2.7
Blind Changing	-----	-----	------	------	------	-----	0.9	-0
Sampling	-----	-----	------	------	------	-----	6.7	-0
TOTAL	116.2	116.2	547.2	547.2	896.3	941.1	184.7	134.2

*For calculations and assumptions used to determine the values used for this table, see Appendix 1.

C. HYDROGEN PLANT

Hydrogen is an intermediate material in the refining operation. The HREC refinery will engage in a great deal of hydrodesulfurizing of intermediate products. This will require much more hydrogen than can be generated by such units as the catalytic reformer.

The principle method of producing hydrogen is steam reforming of some available hydrocarbon such as natural gas, refinery gas, propane, butane, or naphtha. HREC plans on using refinery fuel gas or naphtha. The basic reaction is:

$$CH_4 + 2H_2O \rightarrow 4H_2 + CO_2$$

The feed material, probably refinery gas, is first treated for sulfur removal. The sulfur in the gas is absorbed into a zinc oxide catalyst. The sulfur-free gas is mixed with high-pressure steam and pre-heated in the convection section of the reformer furnace. The mixed gas flows down through a nickel, zinc, or copper catalyst-filled tube where the basic reaction takes place producing carbon monoxide in addition to hydrogen and carbon dioxide. The high temperature effluent gas from the reformer furnace flows through the tubeside of a steam generator producing high-pressure steam. Additional high-pressure steam is generated in the convection section of the furnace. This steam is consumed in the reforming reaction. More than three-quarters of the total hydrogen is produced in the reforming reaction. The remaining hydrogen is produced by the shift conversion of carbon monoxide to carbon dioxide. The catalytic conversion occurs in two stages, one at high temperature and the second at low temperature. The combination of shift converters will achieve 98 percent conversion of the total carbon monoxides to carbon dioxide and hydrogen. Reaction heat is removed between the two stages of shift conversion

by generating low pressure steam. The gas temperature between the catalyst beds is also lowered to provide more favorable conditions for the shift reaction.

The raw hydrogen gas from the shift converter is further cooled before mixing with a monoethanolamine (MEA) solution in an exchanger. The heat of reaction between carbon dioxide and MEA is largely removed in this precontact stage ahead of the amine absorber. The remaining carbon dioxide is removed from the gas stream by reaction in the absorber. The heat for MEA regeneration is supplied partly from the process gas and partly from low pressure steam. An MEA reclaimer is provided to maintain a clean active solution. Other means of absorbing carbon dioxide may be used instead of MEA; these include Sulfinol and activated hot carbonate.

The points of potential emissions as quantified in Table 2 include the hydrogen furnace which exits through Stack #1 and relief valves which are vented to the flare gas system. There are no pumps in hydrocarbon service other than methane. There is a possibility that a compressor will be involved to handle the incoming refinery fuel gas and compress it from 50 to 400 psi. This compressor would be equipped with oil film seals or flare vent seals depending upon the type of compressor chosen. The oil film seal would be desirable if the compressor is a centrifugal unit and flare vent selas would be BACT for a reciprocating unit.

Base upon similar units in operation at other refineries, it is anticipated that the catalyst beds will have to be replaced every three to five years. During replacement, the spent catalyst is oxidized to the metallic oxide state. In the oxide state, the metal is insoluble in water and can be disposed of in a sanitary land fill. In order to transfer this material, it must be extremely dry so that it will flow freely. This will constitute a fugitive dust problem while transfer is made. Due to the infrequency of the

Table 2. EMISSIONS FROM THE HYDROGEN PLANT (TPY)*

CONTAMINANT / SOURCE	PARTICULATES		SULFUR DIOXIDES		NITROGEN OXIDES		HYDROCARBONS	
	Uncontrolled	Controlled	Uncontrolled	Controlled	Radian	AP-40	Uncontrolled	Controlled
Hydrogen Heater	186.2	186.2	827.4	827.4	1355.4	1465.7	75.4	75.4
Compressor	------	------	------	------	------	------	1.6	-0
Relief Valves	------	------	------	------	------	------	31.9	-0
Blind Changes	------	------	------	------	------	------	0.9	-0
Sampling	------	------	------	------	------	------	6.7	-0
Control Valves & Flanges	------	------	------	------	------	------	81.4	81.4
TOTAL	186.2	186.2	827.4	827.4	1355.4	1465.7	197.9	156.8

*For calculations and assumptions used to determine values used for this table, see Appendix 2.

operation, these emissions are not considered to be significant.

D. NAPHTHA AND DISTILLATE HYDRODESULFURIZERS

Hydrodesulfurization (HDS) processes are used to remove sulfur from liquid petroleum fractions. Some nitrogen removal and saturation of olefin bonds may also occur. Sulfur removal is accomplished by reacting the sulfur containing compounds with hydrogen (created in the hydrogen plant) in the presence of a catalyst to form hydrogen sulfide. The hydrogen sulfide is extracted in an amine stripper.

The naphtha and distillate oil is heated in an exchanger and mixed with a hydrogen rich gas stream. The mixed feed is heated in a fired heater and passed through a cobalt molybdenum catalyst bed, where the hydrogen reacts with sulfur and nitrogen compounds. Reactor effluent is cooled and a small quantity of water is added to absorb ammonia compounds. The liquids are separated from the vapors, and the liquid phase is withdrawn.

All of the condensible material from the top of the crude distillation column is treated in the naphtha hydrodesulfurizer. The saturated H_2S gas is treated in a monoethanolamine (MEA) scrubber before the gas is sent to the centralized refinery fuel gas system. The H_2S and MEA are separated and the H_2S travels to the sulfur plant. The gas travels by convection and no pumping should prove necessary. The treated naphtha is routed to the debutanizer. Emissions from the proposed naphtha hydrodesulfurization unit are tabulated in Table 3.

The distillate hydrodesulfurizer operates in much the same manner. The three lightest side-cuts from the crude unit, heavy naphtha, kerosene, and light gas oil, are sent to intermediate storage. Only one of the three products is processed through the unit at any one time. One of the results of running naphtha through

Table 3. EMISSIONS FROM THE NAPHTHA HYDRODESULFURIZER (TPY)*

CONTAMINANT / SOURCE	PARTICULATES		SULFUR DIOXIDES		NITROGEN OXIDES		HYDROCARBONS	
	Uncontrolled	Controlled	Uncontrolled	Controlled	Radian	AP-40	Uncontrolled	Controlled
Naphtha HDS Heater	63.0	63.0	280.2	280.2	460.4	446.4	25.5	25.5
Relief Valves	-----	-----	------	------	------	------	31.9	-0
Control Valves & Flanges	-----	-----	------	------	------	------	81.4	81.4
Blind Changing	-----	-----	------	------	------	------	0.9	-0
Sampling	-----	-----	------	------	------	------	6.7	-0
Pumps & Compressors	-----	-----	------	------	------	------	3.7	2.9
TOTAL	63.0	63.0	280.2	280.2	460.4	446.4	150.1	109.[illegible]

*For calculations and assumptions used to determine values used for this table, see Appendix 3.

the unit is the production of a lighter "wild" naphtha which is collected in a product stripper and sent as feed to the debutanizer. The heavier kerosenes and gas oils leave the unit to be marketed. The kerosene has become Jet A-1 fuel and the gas oils are blended to form a #2 fuel oil. Overhead gases are stripped of H_2S and sent as feed stock to the liquid petroleum gas (LPG) plant. Table 4 shows the emissions from the various operations of the proposed distillate hydrodesulfurizer.

Even if the type of unit planned for the hydrodesulfurization unit is not a Hydrobon system licensed by Universal Oil Products (UOP), it will be of similar design. This type of operation can yield products of less than 0.1 percent sulfur by weight (Hydrocarbon Processing).

The sources of potential pollution from each unit include the process heaters (each of which exit through Stack #2), relief valves, control valves and flanges, pumps and compressors, blind changing and sampling.

E. RESIDUUM HYDRODESULFURIZER

The principle of the residuum hydrodesulfurizer is the same as for the naphtha and distillate hydrodesulfurizer units. Heavy gas oil (the densest side cut) and distillate residuum from the distillation column are blended and routed to the unit, probably a Gulf #3 HDS unit (see page 37 for specifications on Gulf HDS units). The high volumes of residuum (87,500 BPSD)[1] require three separate trains in parallel for the unit. Size limitations on the Gulf unit only allow trains of 30,000 barrels/day capacity. Each train is, in essence, a separate unit, complete with amine stripper and a recycle compressor.

The blended residual oil is desulfurized from about 90 percent to 0.5 percent sulfur by weight. After desulfurization the

[1] BPSD = barrels per stream day.

Table 4. EMISSIONS FROM THE DISTILLATE HYDRODESULFURIZER (TPY)*

CONTAMINANT / SOURCE	PARTICULATES		SULFUR DIOXIDES		NITROGEN OXIDES		HYDROCARBONS	
	Uncontrolled	Controlled	Uncontrolled	Controlled	Radian	AP-40	Uncontrolled	Controlled
Distillate HDS Heater	31.4	31.4	139.3	139.3	228.4	192.0	12.7	12.7
Relief Valves	----	----	------	------	------	------	31.9	-0
Control Valves & Flanges	----	----	------	------	------	------	81.4	81.4
Blind Changing	----	----	------	------	------	------	0.9	-0
Sampling	----	----	------	------	------	------	6.7	-0
Pumps & Compressors	----	----	------	------	------	------	3.5	0.8
TOTAL	31.4	31.4	139.3	139.3	228.4	192.0	137.1	94.9

*For calculations and assumptions used to determine values used for this table, see Appendix 4.

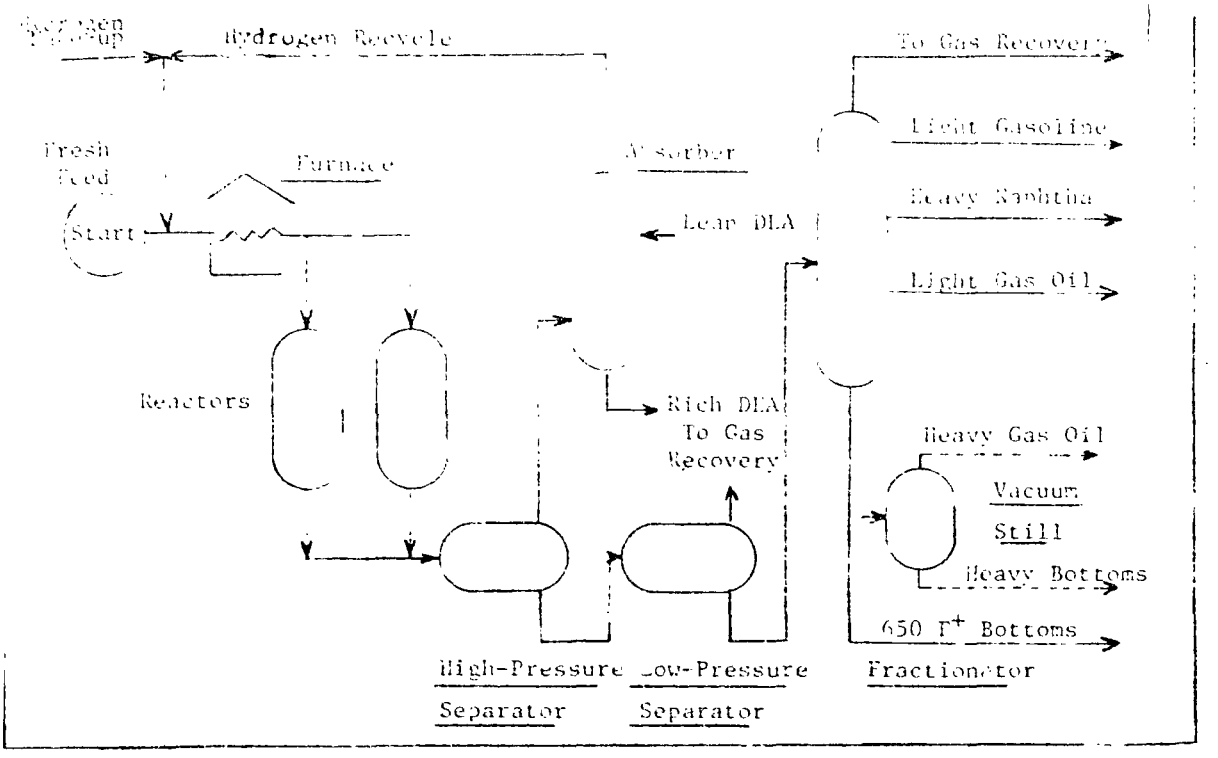

HDS

Application: Upgrades high sulfur atmospheric residua to low sulfur fuel oils and minor amounts of low sulfur naphtha and middle distillate (optional). Modified version can be used along with desulfurization of crude tower overheads to produce low sulfur export crude. Products of Types III and IV can be directly cat cracked with performance and catalyst requirement similar to virgin gas oils; Type II product must be vacuum flashed to provide suitable cat cracker feed. Alternate designs (Types II, III and IV) provide increasingly deep desulfurization.

Description (Types II, III and IV): Fresh filtered feed, from desalted crude, is heated together with makeup hydrogen and recycle gas, and mixture is charged to the reactor section. Hydrogen-rich gas is flashed from reactor effluent in a high-pressure separator. Heater, reactor section, and separator are usually duplicated in two trains. Separator gas is purified prior to recycling to reactor section; and separator liquid passes through a low-pressure separator to remove H_2S and fuel gas, then on to the fractionator for separation of naphtha, middle distillate (optional), and fuel oil.

Operating conditions: High pressure is used to minimize coke production and assure economically attractive run lengths. In general, temperatures are in the range of 650 to 850° F, and space velocity 0.2 to 2 vol/hr/vol. Catalyst is discarded and replaced on an annual or semi-annual schedule. Feed is normally 650° F+ reduced crude, but other cutpoints may be used.

Commercial installations: Four for Kuwait residua.

Economics: Processing 650° F+ Kuwait reduced crude. Basis: 50,000 bpsd, 2 cycles/yr:

HDS type	II	III	IV
Investment: (U.S. Gulf Coast), $ per bpsd			
HDS unit + first catalyst charge	473	629	730
Utilities: Avg. per bbl. feed			
Power, shaft kwh	4.8	5.5	7.0
Steam (650 lb., 750° F), lb.	21.9	28.6	45.5
Steam (50 lb., sat'd), lb.	26	41	46
Fuel release, M Btu	76	84	64
Water, cooling (20° F rise), gal.	214	288	355
Condensate (deaerated), gal.	1.3	1.7	1.7
Catalyst cost: cents/bbl	6.1	14.4	27.8

Yields: Average for run:

		Kuwait		Arabian Light	Iranian Light	Kuwait (1050°F +VTB)
Charge (650+F)						
Gravity, °API		16.6		17.6	18.8	5.5
Sulfur, %		3.8		3.0	2.45	5.7
Ni + V, ppm		60		40	110	162
HDS Type	II	III	IV	III	III	II
Product Yield						
H_2S, wt. %	3.1	3.7	3.9	2.9	2.3	5.2
C_1-C_4, wt. %	0.5	1.1	1.4	0.7	0.6	1.6
C_5–375°F Naphtha, vol. %	1.6	3.3	5.9	2.3	1.9	3.5
375–650°F Distillate, vol. %	4.8	.....	.....	.....	.....	.....
650°F+ Fuel Oil, vol. %	94.6	.....	.....	.....	.....	.....
375°F+ Fuel Oil, vol. %	.....	97.2	98.9	99.7	100.0	100
Chem. H_2 Consumption: scf/bbl	510	790	860	535	480	1250
Fuel Oil						
Gravity, °API	20.3	21.5	20.1	21.3	22.6	16.8
Sulfur, %	1.0	0.30	0.10	0.30	0.30	0.9
Cat Cracker Feed (650–1100°F)						
Gravity, °API	24	23.5	27.4	.....	.....	.....
Sulfur, %	0.65	0.24	0.10	.....	.....	.....
Car. Rec. (Con.), %	0.61	0.1	....	.....	.....	.....
Ni + V, ppm	0.2	<0.1	<0.1	.....	.....	.....
Vac. Tower Bottoms (1100°F)						
Gravity, °API	13	13.1	15.5	.....	.....	.....
Sulfur, %	2.5	0.73	0.22	.....	.....	.....
SUV @ 210°F	20,000	1090	900	.....	.....	.....
Car. Rec. (Con.), %	21	15.7		.....	.....	.....

Reference: *Hydrocarbon Processing*, Vol. 52, No. 5, May 1973, pp. 86-88.

Licensor: Gulf Research & Development Co.

oil is blended again with #2 fuel oil to make a #5 fuel oil with 0.3 percent sulfur by weight.

Overheads generated include saturated sour gas and wild naphtha. The wild naphtha is sent to the distillate hydrodesulfurizer for further treatment. The overhead gas is amine stripped using diethanolamine (DEA) for H_2S removal. The H_2S is transported to sulfur recovery and the hydrocarbon gas is routed to the LPG plant.

The sources of potential pollution from the unit include the process heater (which exits through Stack #1), relief valves, control valves and flanges, pumps and compressors, blind changing and sampling. Emissions from this unit are reported in Table 5.

F. DEBUTANIZER (STABILIZER) AND NAPHTHA SPLITTER

The debutanizer is located downstream of the naphtha hydrodesulfurizer. The feedstock consists of naphtha from the HDS unit and the wild naphthas generated in the distillate and residuum hydrodesulfurizers. The feedstocks enter the unit at about midpoint in the column. The material is allowed to stabilize with the stocks lighter than butane leaving overhead to be routed to the LPG plant. The butane and heavier materials which form the bottoms from the debutanizer may be routed to a naphtha splitter. The purpose of the naphtha splitter is to separate additional isopentane for feed to the isomerization unit. The bottoms from the splitter are sent to the catalytic reformer. FWEC is still uncertain as to whether or not the splitter will be necessary.

These units do not have heaters associated with them. Reflux from the bottoms of each column, which are being routed back and recharged to the systems, are passed through reboilers which consist of heat exchangers jacketed with steam generated in another part of the refinery.

Table 5. EMISSIONS FROM THE RESIDUUM HYDRODESULFURIZER (TPY)*

CONTAMINANT / SOURCE	PARTICULATES		SULFUR DIOXIDES		NITROGEN OXIDES		HYDROCARBONS	
	Uncontrolled	Controlled	Uncontrolled	Controlled	Radian	AP-40	Uncontrolled	Controlled
Residual HDS Heaters	77.4	77.4	343.9	343.9	563.4	580.1	31.3	31.3
Relief Valves	----	----	------	------	------	------	31.9	-0
Control Valves & Flanges	----	----	------	------	------	------	81.4	81.4
Blind Changing	----	----	------	------	------	------	0.9	-0
Sampling	----	----	------	------	------	------	6.7	-0
Pumps & Compressors	----	----	------	------	------	------	12.2	1.5
TOTAL	77.4	77.4	343.9	343.9	563.4	580.1	164.4	114.2

*For calculations and assumptions used to determine values used for this table, see Appendix 5.

Sources of emissions are relief valves, reflux pumps, control valves and flanges, blind changing, and sampling. All process flows other than reflux will result without pumps or compressors due to the operational pressures and the lightness of the materials involved. Table 6 presents the emissions from the proposed debutanizer while Table 7 reports the emissions from the proposed naphtha splitter.

Table 6. EMISSIONS FROM THE DEBUTANIZER (STABILIZER) (TPY)*

SOURCE	HYDROCARBONS	
	Uncontrolled	Controlled
Relief Valves	31.9	-0
Control Valves & Flanges	81.4	81.4
Blind Changing	0.9	-0
Sampling	6.7	-0
Reflux Pump	0.9	0.5
TOTAL	121.8	81.9

*For calculations and assumptions used to determine values used for this table, see Appendix 6.

Table 7. EMISSIONS FROM THE NAPHTHA SPLITTER (OPTIONAL) (TPY)*

SOURCE	HYDROCARBONS	
	Uncontrolled	Controlled
Relief Valves	31.9	-0
Control Valves & Flanges	81.4	81.4
Blind Changing	0.9	-0
Sampling	6.7	-0
Reflux Pump	0.9	0.5
TOTAL	121.8	81.9

*For calculations and assumptions used to determine values used for this table, see Appendix 7.

G. CATALYTIC REFORMING

Catalytic reforming will be used by HREC to economically upgrade low octane naphthas to produce premium quality motor fuels. The reactions involved in the process results in the production of hydrogen gas which can be used to treat products in the naphtha hydrodesulfurizer and in the isomerization unit.

The naphtha feedstock (bottoms from the naphtha splitter) prior to entering the reformer, is hydrotreated for removal of essentially all of the sulfur (1 ppm) which would act as a poison to the platinum catalyst in the reforming unit. The sulfur leaves the unit as H_2S and is sent to the central refinery amine system. The sulfur free naphtha charge and hydrogen rich recycle gas are heated in a furnace to the reactor inlet temperature and then passed through fixed catalyst beds in a series of reactors. As the major reactions are endothermic, the gas temperature drops across each reactor and furnaces are required to reheat the gas between the reactors. The effluent gas is condensed and separated into a liquid stream and hydrogen rich gas. The liquid is processed

through the stabilizer and withdrawn as finished reformate. A portion of the gas is recycled and the remainder of the gas travels to the previously indicated destination.

Although the unit planned is a Rheniforming or similar unit (see the following page for process specifications) which has a fixed catalyst bed, continuously generating beds have been introduced (such as Powerforming). Catalyst regeneration is required because coke is deposited on the catalyst surface during normal operation causing a reduction in catalyst activity. During regeneration, the coke is burned off the catalyst under carefully controlled conditions. A continuous regeneration process has a larger particulate and carbon monoxide emission potential than a fixed bed operation has.

Foster Wheeler anticipates that the HREC fixed bed reforming unit will be steam-aired to decoke the catalyst beds once a year. Gases generated during this operation will be vented to the flare. The catalyst beds will be replaced every four to six years. This replacement will have a fugitive particulate potential but due to the infrequency of the operation it is considered to be insignificant.

Sources of potential pollution from the unit are the reformer heaters which, since the number of reactors and furnaces are known, are considered as one unit (all will exit through Stack #2), relief valves, control valves and flanges, pumps, blind changing and sampling. There are no compressors associated with this unit. The proposed catalytic reforming unit will have emissions as reported in Table 8.

H. DEPENTANIZER

The depentanizer operates in much the same manner as the debutanizer discussed earlier. Located downstream of the catalytic reforming unit, the depentanizer feed stocks are debutanizer bottoms reformate. After stabilization the isopentane overheads are routed as feedstock to the isomerization unit. The bottoms are blended with products from the LPG plant and isomerization units to form various grades of gasolines.

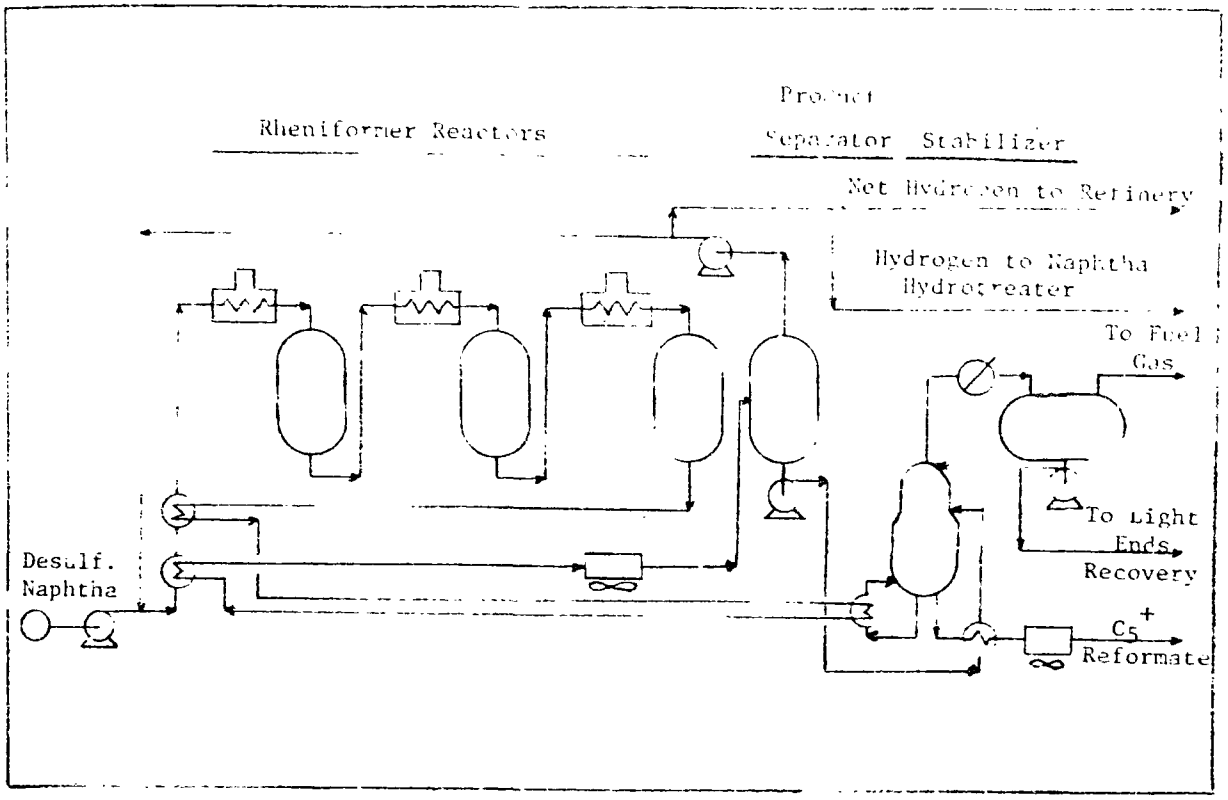

Rheniforming

Application: To convert low-octane naphthas to high yields of high octane gasoline blendstock or aromatics plant chargestock.

Charge: Hydrofined straightrun and cracked naphthas and hydrocracked naphthas.

Products: Sustained high run-average yields of C_5 plus reformate and hydrogen are maintained throughout the operating cycle permitting 95 to 103 Research octane number clear severity even with highly paraffinic feedstock. There is essentially no dropoff in either liquid yield or hydrogen yield as temperatures reach the levels where hydrocracking normally occurs with platinum catalyst.

Description: Rheniforming is a regenerative, fixed-bed catalytic reforming process which employs a bimetallic catalyst. Special operating techniques permit maintenance of high activity throughout each run and return to fresh activity after each catalyst regeneration. No commercial Rheniformer has ever changed out catalyst after its initial filling. The resistance to fouling of rhenium-platinum catalyst permits low pressure operation (100 to 200 psig at last reactor outlet). Low pressure increases yields of aromatic naphtha product and hydrogen. The increased resistance to fouling also provides for expansion of existing plants using higher space velocities and lower recycle ratios. Converted units are operating with H_2/HC ratios of 3 to 3.5 and long cycles between regeneration.

Yields: Rheniforming yields for severe reforming of a paraffinic Arabian naphtha and a naphthenic Isocracked naphtha are as follows:

Feedstock	Hydrofined Arabian Naphtha		Isocracked Naphtha
Boiling Range, °F	180-310		200-370
Composition, LV%			
Paraffins	68.6		32.6
Naphthenes	23.4		55.5
Aromatics	8.0		11.9
Sulfur, ppm	< 1.0		< 1.0
Nitrogen, ppm	< 0.5		< 0.5
Reactor Outlet Pressure, psig	150	200	200
Product Yields			
Hydrogen, scf/bbl feed	1480	1210	1330
C_1-C_4, scf/bbl feed	230	380	200
C_5+ Reformate, LV%	77.8	73.0	84.1
Reformate Properties			
C_5+ Research octane, clear	98	99	100
Composition, LV%			
Paraffins	32.2	31.7	27.4
Naphthenes	1.7	0.5	2.2
Aromatics	66.1	67.8	70.4
Aromatics breakdown			
C_6	1.9	2.6	1.3
C_7	15.7	18.8	1.0
C_8	28.3	28.9	2.1
C_9	19.0	15.9	19.6
C_{10}	1.2	1.6	9.4

Commercial installations: 54 Rheniformers are now onstream. 13 others are under engineering and construction. Total capacity of the 47 units is more than 700,000 bpd.

Reference: Gould, G. D. et. al., "Ultra Low Pressure Rheniforming Gives High Yields," presented before National Petroleum Refiners Association, Miami, Fla., March 31, 1974.

Licensor: Chevron Research Co.

Table 8. EMISSIONS FROM THE CATALYTIC REFORMING UNIT (TPY)*

CONTAMINANT / SOURCE	PARTICULATES		SULFUR DIOXIDES		NITROGEN OXIDES		HYDROCARBONS	
	Uncontrolled	Controlled	Uncontrolled	Controlled	Radian	AP-40	Uncontrolled	Controlled
Reformer Heaters	127.1	127.1	564.6	564.6	925.2	961.9	50.7	50.7
Relief Valves	-----	-----	------	------	------	------	31.9	-0
Control Valves & Flanges	-----	-----	------	------	------	------	81.4	81.4
Blind Changing	-----	-----	------	------	------	------	0.9	-0
Sampling	-----	-----	------	------	------	------	6.7	-0
Pumps	-----	-----	------	------	------	------	1.7	0.9
TOTAL	127.1	127.1	564.6	564.6	924.2	961.9	173.3	133.0

*For calculations and assumptions used to determine values used for this table, see Appendix 8.

Pumps are used to transport the overheads and bottoms from the unit. Other potential sources of emissions will be relief valves, control valves and flanges, blind changing, and sampling. The potential emissions from the proposed depentanizer unit are listed in Table 9.

Table 9. EMISSIONS FROM THE DEPENTANIZER (TPY)*

SOURCE	HYDROCARBONS	
	Uncontrolled	Controlled
Relief Valves	31.9	-0
Control Valves & Flanges	81.4	81.4
Blind Changing	0.9	-0
Sampling	6.7	-0
Pumps	1.7	0.9
TOTAL	122.6	82.3

*For calculations and assumptions used to determine values for this table, see Appendix 9.

I. ISOMERIZER UNIT

Isomerization is used to upgrade normal paraffins (straight-chain hydrocarbons) to isoparaffins (branched chain). HREC will apply the process to mixtures of pentane and hexane to improve their octane ratings.

Foster Wheeler indicated that the type of unit planned for installation can be assumed to be a Hysomer process (see page 46). The method employs a molecular sieve (zeolite) catalyst and a fixed bed. Since sulfur is also a catalyst poison in this process, the feed is first mixed with hydrogen (provided by the catalytic reformer) to suppress unwanted reactions. Since the feed usually contains a mixture of normal and isopentane, the mixture is first separated into its normal and iso components in a deisopentanizer. The overhead product, isopentane, is sent directly to blending. The bottom product is mixed with hydrogen and heated by indirect heat exchange with reactor effluent. The feed stream is further heated

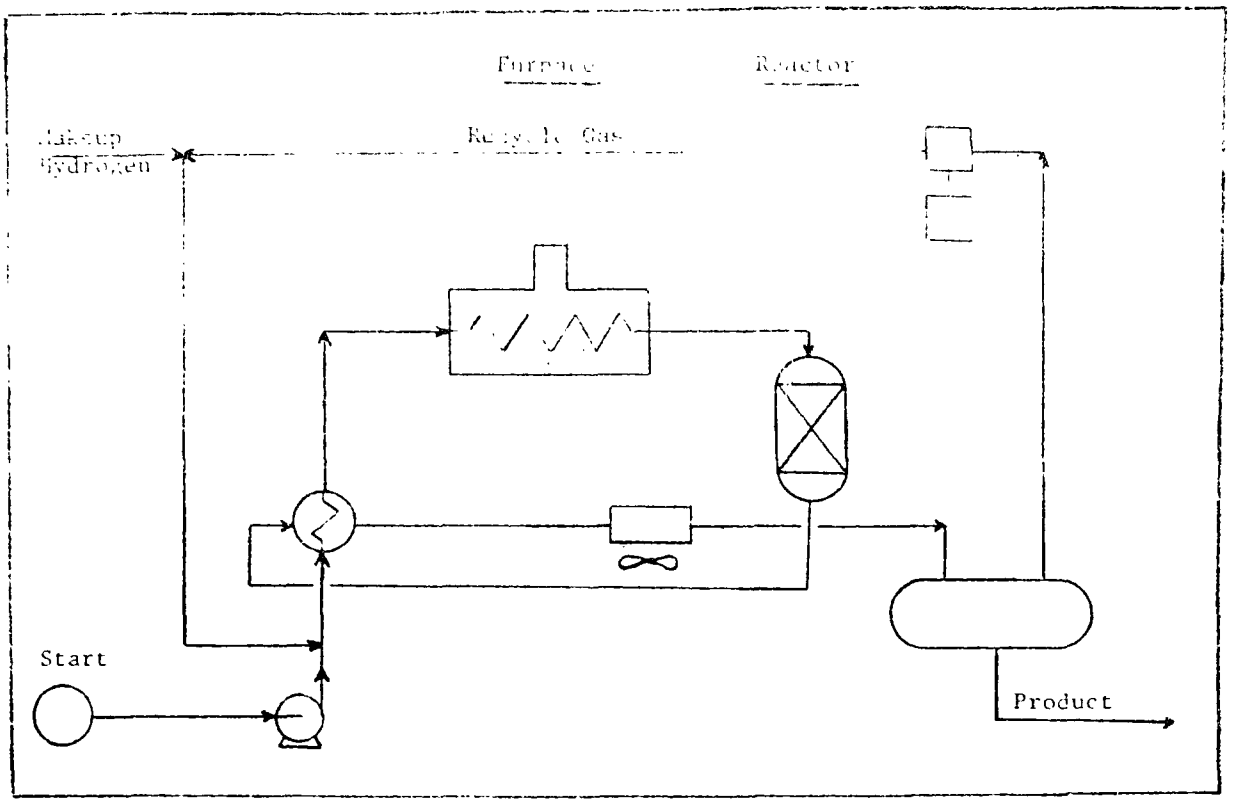

Hysomer

Application: To upgrade the octane-level of light gasoline fractions, predominantly consisting of pentanes and/or hexanes.

Charge: Hydrotreated light straight-run gasoline (160° F EP) or other low-octane C_5/C_6 hydrocarbon streams.

Description: The vapor-phase, fixed-bed hydroisomerization process uses a rugged, dual function catalyst consisting of a noble metal on a molecular sieve zeolite base. Feedstock specifications are not stringent. In C_5/C_6 feedstocks up to 35 ppm sulfur, water of saturation and several percent C_7's and aromatics can be tolerated. At least 15% naphthenes can be readily processed, chemical hydrogen consumption is low (0.1-0.3% wt), and the make gas of a catalytic reformer is suitable without treating or drying. The catalyst is highly stable and regenerable.

The hydroisomerization unit can to a large extent be integrated with a catalytic reformer, resulting in substantial equipment savings. In closely integrating the Hysomer process with an Union Carbide IsoSiv unit for iso/normal paraffin separation to give a TIP system (total isomerization process), a high octane product virtually free of normal paraffins can be obtained. TIP feedstock specifications are the same as for Hysomer.

Operating conditions, Hysomer:

Temperature, °F	450-550
Pressure, psig	200-500
Space velocity, vol./vol./hr.	1-3
H_2-hydrocarbon mole ratio	1-4

Commercial installations: Two units in operation in which one is integrated with catalytic reforming. Two TIP systems under design/construction, others in engineering and design.

Yields: Typical properties of C_5/C_6 feed and isomerized product (commercial results).

	Feed	Hysomer	TIP
Gravity, °API	90	91	91
ASTM distillation, °F			
IBP	91	—	—
FBP	153	—	—
Research octane, clear	73.2	82.1	90.7
C_5^+ yield, wt. %	—	97.4	96.8
Composition, wt. %			
Butanes	0.7	1.8	2.8
Isopentane	29.3	49.6	72.0
Normal pentane	44.6	25.1	2.0
2,2-Dimethylbutane	0.6	5.0	5.5
2,3-Dimethylbutane	1.8	2.2	2.5
S-Methylpentanes	13.9	11.3	13.4
n-Hexane	6.7	2.9	<0.1
Cyclic C_5/C_6	—	—	1.8

Economics:

	Hysomer	TIP
Investment (Basis: 8,000 bpsd feed, including stablizer, mid-1974 costs), $ per bpsd capacity	200	375
Catalyst, including noble metal and adsorbent:		
First charge, $ per bpsd capacity	85	140
Replacement, approx. % of first cost	55	65
Expected life, yr.	5	5
Typical requirements, incl. stab., unit per bbl feed:		
Electricity, kwh	1.5	3.6
Fuel, M Btu	40	150
Steam, low pres., lb.	35	45
Hydrogen, scf	85	95
Water, cooling, gal.	50	430

Reference: *Chem. Eng. Progress,* Vol. 67, No. 4, April 1971, pp. 65-70.

Licensor: Union Carbide Corp. for process developed by the Royal Dutch/Shell group of companies.

in the isomerization heater and then passed over the catalyst in the reactor. Reactor effluent is cooled, first by exchange with the feed and then in a water or air cooled effluent condenser. The condenser is followed by a separator in which the liquid and gas phases are separated.

The gas from the separator, primarily hydrogen, is recycled to the reactor by means of a compressor (a motor-driven reciprocating unit). The liquid phase contains dissolved hydrogen and other gases, which are removed in a stabilizer. The stabilizer is a distillation column in which all liquid reflux is returned to the column. Gas from the stabilizer accumulator (including any H_2S generated) is sent to the fuel gas system by way of the amine scrubbing system. Stabilizer bottoms are a mixture of iso and unconverted normal pentane which are routed to the deisopentanizer for reseparation. The normal pentane is reprocessed through the isomerizer.

As with the catalytic reformer, the catalyst beds in the isomerization unit gradually accumulate coke which must be removed to maintain activity levels. Since the catalyst bed is fixed, the regeneration process is performed in place. After the unit has been shutdown, the reactor is depressurized to the refinery flare gas system through the relief valves. Inert gas (probably nitrogen) is used to free the reactor of combustible gas. The catalyst is brought to temperature by recycling inert gas through the heater and reactor, and carbon is burned off the catalyst by adding a controlled amount of air to the circulating gas stream. Since the stream contains products of incomplete combustion (carbon monoxide) the off gas is usually incinerated in the isomerization heater.

The regeneration process occurs very infrequently, perhaps once a year, and should not be considered to be a significant emission source. A similar insignificant source of fugitive particulate emissions

will occur every two to three years when catalyst replacement occurs. Sources of more constant potential emissions are the isomerization heater (which exits through Stack #2), relief valves, control valves and flanges, blind changing, sampling and pumps and compressors. Presented in Table 10 are the potential emissions from the proposed isomerization unit.

The HREC isomerization process should be carefully examined to determine if organic chloride is added to the feed. In some versions of the isopentane isomerization process, an organic chloride is added to the feed to increase the catalyst activity. This chloride eventually appears in the vapor streams as hydrogen chloride. Most of the hydrogen chloride is recycled in the process, but some is eliminated with the gases traveling to the fuel gas system. In such cases, this stream will have to be treated in a caustic scrubber to remove the hydrogen chloride before the gas is burned as fuel.

J. LPG PLANT

After the overhead stream from the crude unit is desulfurized in the naphtha hydrodesulfurizer unit, it goes to a debutanizer plant which separates the stream into the "bottoms" which consist of pentane and heavier fractions, while the butanes and lighter fractions compose the overhead. The overhead stream then goes to the LPG plant where it is further separated into a butane stream, a propane stream and fuel gas containing a small quantity of H_2S. The butane and propane streams go to storage for marketing or blending. The overhead is further desulfurized or sweetened in the sulfur plant and goes either to the refinery fuel gas system for fuel or as feed for the hydrogen manufacturing unit.

The points of potential emissions are the pumps and compressors, relief valves, piping, flanges and valves. Blinds in LPG plants are usually of the Hamer type which can be changed almost instantaneously without loss. This valve has an integral hand-

Table 10. EMISSIONS FROM THE ISOMERIZER UNIT (TPY)*

CONTAMINANT / SOURCE	PARTICULATES		SULFUR DIOXIDES		NITROGEN OXIDES		HYDROCARBONS	
	Uncontrolled	Controlled	Uncontrolled	Controlled	Radian	AP-40	Uncontrolled	Controlled
Isomerization Heater	21.90	21.90	95.6	95.6	159.6	125.3	8.9	8.9
Relief Valves	-----	-----	-----	-----	------	------	31.9	-0
Contral Valves & Flanges	-----	-----	-----	-----	------	------	81.4	81.4
Blind Changing	-----	-----	-----	-----	------	------	0.9	-0
Sampling	-----	-----	-----	-----	------	------	6.7	-0
Pumps & Compressors	-----	-----	-----	-----	------	------	1.7	0.9
TOTAL	21.90	21.90	95.6	95.6	159.6	125.3	131.5	91.2

*For calculations and assumptions used to determine values used for this table, see Appendix 10.

wheel to release the pressure on a rubber-gasketed double spectacle blind. One side is solid and the other is ring-shaped for use during normal operations. When the pressure is released, the blind is merely slid across to the other position and the pressure reapplied by the hand-wheel. These blinds are relatively expensive, but redeem their cost by being situated only in positions where frequent changes are required such as pumping manifolds. These blinds can be changed by the operators without tools. Also the mechanic's time normally required for a conventional blind is eliminated. Cocks are normally used instead of valves in LPG service also.

The two-stage centrifugal compressor will have mechanical seals vented to the flare. All pumps will be conventional reciprocating pumps with packing glands. The examiners consider a packing gland to be the best current control technology for a reciprocating pump. However, recent literature has pointed up the possibility of application of the mechanical seal to various pumps. The September 1976 issue of Hydrocarbon Processing, page 431 announced the existence of a new off-the-shelf mechanical seal which covers 90 percent of all pump applications. They can be interchanged with nearly all existing pump seals or packing without requiring re-engineering. The manufacturer is A.W. Chesterton Co., Middlesex Industrial Park, Stoneham, Massachusetts 02180.

To date examiners have been unable to obtain literature describing these seals and do not know whether they have potential applicability to the HREC refinery.

It is not known at this time whether or not a Merox unit will be required. If so, the purpose of this unit is to remove any remaining mercaptans from the LPG by converting them to disulfides. Potential losses from this unit are reported in Tables 11 and 12.

Table 11. EMISSIONS FROM THE LPG PLANT (TPY)*

SOURCE	HYDROCARBONS	
	Uncontrolled	Controlled
Relief Valves	31.9	-0
Control Valves & Flanges	81.4	81.4
Blind Changing	Neg.	-0
Sampling	6.7	-0
Pumps & Compressors	11.4	8.2
TOTAL	131.4	89.6

*For calculations and assumptions used to determine values used for this table, see Appendix 11.

Table 12. EMISSIONS FROM THE OPTIONAL MEROX UNIT (TPY)*

SOURCE	HYDROCARBONS	
	Uncontrolled	Controlled
Pumps	1.7	0.1
TOTAL	1.7	0.1

*For calculations and assumptions used to determine values for this table, see Appendix 12.

K. AMINE TREATING

Because Foster Wheeler has not performed the detailed engineering design work for the HREC refinery, it is impossible to judge whether or not the amine system planned will be adequate to handle fluctuations in the percentage of sulfur in the incoming crude oil. As a result, this discussion must remain general in nature.

An estimated 270,000 metric tons per annum (MTPA) of sour gas will be routed to amine units. In addition to the amine scrubber associated with each of the three hydrodesulfurizers, Foster Wheeler will have a central amine stripper to handle the rich amine solution from the amine scrubbers.

In an amine unit, the hydrogen sulfide is removed by absorption in an alkaline solution. The central unit, the naphtha hydrodesulfurizer and the distillate hydrodesulfurizer will use monoethanolamine (MEA) as the alkaline material while the residuum hydrodesulfurizer system will use diethanolamine (DEA). These materials are chosen so that the chemical bond formed during absorption can be broken by heating. The hydrogen sulfide is stripped from the heated solution which, after cooling, is ready for reuse.

The absorption medium is a 10 to 20 weight percent of MEA (or 20 to 30 weight percent of DEA) in water. The H_2S is removed from the sour gas by contacting with the solution in the countercurrent absorber. The sour gas enters the bottom of the column and cool, lean amine (containing no H_2S) enters at the top. Treated gas leaves the top of the absorber and passes to the refinery fuel gas system. Foster Wheeler estimates this refinery fuel gas will contain less than five grains of sulfur per cubic foot. Rich amine (containing H_2S) is used to cool the lean amine and is fed to the top of the stripper. Steam used for stripping the rich amine is generated by boiling the stripper bottoms in the reboiler. H_2S and steam leave the top of the stripper column and the steam is condensed. Condensate and H_2S are separated in the acid gas separator and the condensate is pumped back to the stripper as reflux. The H_2S leaves the condenser as overheads and is routed to the sulfur plant. Hot lean amine from the stripper reboiler is cooled and filtered before returning to the absorber.

The H_2S does not have to be pumped to the sulfur plant but travels due to the pressure gradient. Rich amine is not pumped, but lean amine is. Each unit has a reflux pump.

H_2S is a highly corrosive material. Over the years, the need for better corrosion protection had led to the development of a complete scientific discipline developed around the corrosion engineering field. Studies using such devices as corrosion spools and reference points have led to published data establishing the relative abilities of different materials to handle corrosive material.

Upsets in an amine unit of a nature extreme enough to require more than a standard shutdown of the amine stripper or one of the three hydrodesulfurizer amine scrubbers is extremely unlikely. However, should such an event occur, and the sour gas flow is not able to be bypassed to another unit, it will be flared. The repairs to the amine unit can be quickly accomplished since the units are generally built with screwed piping which can easily be replaced with minimal down time.

There are no pollutant emission points associated with this unit. The process is fully enclosed without any relief valves. Flanging is not used and there are no fired heaters.

L. SULFUR PLANT

The HREC refinery will utilize the Claus process to convert hydrogen sulfide to elemental sulfur. The unit planned for this refinery will have two trains, each with three reactors having a total conversion efficiency of 96 percent. The total capacity of the unit will be 400 long tons per calendar day. Each train will be designed to handle between 55 to 60 percent of this load during normal operations. During shutdown of one of the trains, the units would have a maximum capability of 75 percent of the peak load. During these periods, the refinery would be forced to reduce the crude oil throughput to a level which could be handled by one train.

In the Claus reaction, hydrogen sulfide is converted to elemental sulfur in two steps according to the following reactions:

$$H_2S + 3/2\ O_2 \longrightarrow SO_2 + H_2O$$
$$2H_2S + SO_2 \longrightarrow 2H_2O + 3S$$

In the first step, H_2S is partially burned to SO_2 with air. The H_2S/SO_2 mixture is then reacted over a catalyst to produce sulfur and water. This reaction is known as the shift conversion and is carried out in two or three stages with sulfur removal after each stage. The design of a sulfur recovery plant depends upon the inlet H_2S concentration. If the concentration of H_2S in the feed is high, a "straight-through" process is used. In the straight-through configuration, all of the H_2S and air are fed to the burner (boiler). If the H_2S concentration in the feed is low, a "split-flow" or "sulfur recycle" process is used. Foster Wheeler does not know what the H_2S concentration will be. In the "split-flow" process, a portion of the feed is burned completely to SO_2 and combined with the remainder of the feed to provide the proper H_2S/SO_2 ratio for the shift conversion. In the "sulfur recycle" process, the product sulfur is recycled to the burner to support combustion. A fourth type of sulfur recovery process uses the "direct oxidation" approach. This configuration, which is for very lean feeds, eliminates the burner by feeding the acid gas/air mixture directly to a catalytic burner.

Most sulfur plants in refineries are the "straight-through" or "split-flow" type. The straight-through process is used when the inlet stream to the Claus unit contains at least 50 percent of H_2S. The split-flow process is used for the leaner H_2S streams. While Foster Wheeler does not know what the H_2S concentration will be, the inlet gas can be expected to be fairly rich allowing the use of the straight-through process since the refinery will use amine stripping. The acid-gas stream, typically containing

H_2S (80 to 93 percent), CO_2 (2 to 10 percent), water (5 to 10 percent), and minor amounts of hydrocarbons (0.5 to 2 percent), is fed to an inlet separator where any entrained liquid is removed. The acid gas and air are fed to the sulfur boiler. Fuel gas lines are provided to assist in plant startup. Boiler feed water is fed to the sulfur boiler to generate low-pressure steam. The sulfur boiler usually contains three tube passes. A portion of the gases is diverted from the boiler after two passes to provide preheat for the shift converter feed streams. In some plants processing leaner H_2S streams, an auxiliary burner is provided to furnish preheat to the reactors. Liquid sulfur is separated from the boiler effluent gases and is sent to the sulfur pit for storage. The gases are mixed with the reheat stream and fed to the first-stage shift converter. The effluent from the reactor is passed through the condenser. Sulfur is separated and sent to the sulfur pit and the gases are fed to the second-stage converter. If the sulfur plant operates at projected conversion efficiency, 4 percent of the sulfur in the feed will remain in the tail gas. Incomplete conversion occurs because the basic Claus reaction is reversible and limited by chemical equilibrium. The sulfur is converted to SO_2 in the tail gas incinerator.

In some sulfur plants, the sulfur boiler and condenser are combined into a single unit. The catalytic converters are often combined into a single horizontal or vertical vessel. Combining the units in this manner permits many smaller plants to be shop fabricated and skid-mounted.

The acid-gas feed to the sulfur plant is on pressure control. The plant is designed to accept acid-gas flows as they develop in the refinery and a plant can be designed to operate at as low a value as 25 percent of capacity to allow for future demand. The ratio of acid gas to air is controlled by a special ratio flow controller. To set the proper ratio, the acid gas must be analyzed regularly to determine the H_2S concentration.

The proper H_2S/air ratio is critical to the operation of the plant since the concentration of SO_2 in the incinerator stack gases increases if the improper ratio is set. Automatic stream analyzers can be used to set the proper ratio on a nearly continuous basis. The volume of reheat streams is controlled to set the inlet temperatures to the shift converters. If these temperatures are allowed to fall, the reaction is incomplete and sulfur recovery will drop. Incinerator stack temperature is controlled by setting fuel consumption and air bypass. A high temperature is required to ensure complete combustion of sulfur compounds to SO_2.

The tail gases from a typical Claus sulfur recovery unit contains about one-third water, 5 percent to 15 percent CO_2, 2 to 4 percent sulfur compounds of all kinds, and the balance nitrogen. The percentages of sulfur compounds expressed in parts per million, is roughly 20,000 to 40,000 ppm. Most control agencies now expect or limit the concentration of these emissions to 250 ppm or less. In order to reduce the sulfur content of the tail gas to an acceptable level, it becomes necessary to further treat this effluent in a "tail-gas clean-up unit."

The tail-gas clean-up unit selected to be employed by HREC and described below is known as the Beavon Sulfur Removal Process or a Beavon-Stretfor unit.

The Stretford Process has been used in Great Britain for many years to recover hydrogen sulfide from natural gas and convert it to sulfur. The feed gas is passed through an absorption tower which removes the H_2S. The absorbent is an organic liquid which also serves to oxidize the dissolved H_2S to sulfur. The sulfur is removed from the liquid by filtration, and the solvent is regenerated by air oxidation. Very high conversions of H_2S to sulfur are possible with this process. Since the Stretford Process is not suitable for use with feed gases con-

taining SO_2, modification had to be developed. This modification is called the Beavon Sulfur Removal Process.

The advantages of the Stretford process are that it functions well at atmospheric pressure, is unaffected by the carbon dioxide present, produces high-quality sulfur while purifying the gas to a very high degree and does not require special operator skills. Several United States engineering firms have produced operational units of this process--Parsons and Pritchard primarily. Of the two, Foster Wheeler feels that the Parsons design is the better and PES agrees. A Pritchard unit was installed at a Southern California refinery. Problems in the water cooling and condensing section caused a chronic plugging problem which resulted in frequent down time.

The Beavon Stretford unit simply hydrogenates the sulfur compounds, SO_2, COS, CS_2 to H_2S under moderate temperature and pressure conditions using a cobalt-molybdate catalyst. After the reactor, the hydrogenated stream is cooled, water is condensed out, and vapor, containing H_2S, is ready for processing to eliminate the sulfide. It would be desirabl to return this H_2S to the Claus plant feed but, unfortunately, the stream contains so much CO_2 that cannot be easily removed that that the build-up of inert gas in the Claus unit could not be tolerated.

Since the H_2S concentration is about 10,000 ppm and must ultimately be reduced to 1 ppm, a Stretford section is added. The H_2S stream is directed into a column and contacted with sodium carbonate to convert it to sodium hydrosulfide. This is oxidized to sulfur by sodium vanadate. Subsequently, vanadium is oxidized back to the penta valent state by blowing in air with sodium anthraquinone disulfonate working as an oxidation catalyst. Sulfur particles are finely divided and appear as a froth which is skimmed, filtered and returned to the Claus plant to be in-

cluded in the elemental sulfur product. The tail gas will now contain less than 250 ppm SO_2 and 10 ppm of H_2S. Overall sulfur recovery efficiency is expected to be 99.9 percent.

An important consideration to be examined is whether or not the sulfur unit planned by Foster Wheeler is sized large enough to handle the crude oil. The total capacity of the unit will be 400 long tons/calendar day. The refinery throughput is expected to be 175,000 barrels of crude oil/calendar day with a sulfur content of 1.7 percent by weight. The crude oil has an API gravity of 34.2 which corresponds to approximately 7.12 pounds/gallon. The amount of sulfur entering the refinery each calendar day would be:

(175,000 barrels/day)(42 gallons/barrel)(7.12 pounds of crude oil/gallon)(0.017 pounds of sulfur/pound of crude oil) = 889,644 pounds of sulfur/day entering the refinery

Using the most conservative estimates of other sources of emissions, it is assumed that all other products will be sulfur free. The only points at which sulfur leaves the refinery is as #5 fuel oil (product and refinery fuel) and in the sulfur plant (refinery fuel gas is assumed to be sulfur-free).

(76,930 barrels/day)(42 gallons/barrel)(7.56 pounds of crude oil/gallon)(0.003 pounds of sulfur/pound of crude oil) = 73,532 pounds of sulfur/day

This leaves 816,112 pounds/day of sulfur which must be recovered by the Claus unit. A Claus unit with a conversion efficiency of 96 percent capable of recovering 400 long tons/calendar day of sulfur is capable of receiving:

$$\frac{(400 \text{ long tons/day})(2240 \text{ pounds/long ton})}{(.96)} = 933{,}333 \text{ pounds/day of sulfur}$$

This demonstrates that the sulfur plant as planned is capable of handling the anticipated crude oil. Another point which must be studied is the possibility of HREC having to run higher sulfur

crude oil stocks through the refinery. Depending on how firm a contract HREC has made for their crude, they may have to run different crudes. If the amine and hydrodesulfurization units are sized large enough to handle the changes, how high a sulfur content can the sulfur plant handle? Working backwards through the steps just taken yields:

(933,333 pounds/day of sulfur) + (73,532 pounds/day of sulfur in #5 Fuel oil) = 1,006,865 pounds/sulfur day entering the refinery

$$\frac{(1{,}006{,}865 \text{ pounds of sulfur/day})}{(175{,}000 \text{ barrels/day})(42 \text{ gallons/barrel})(7.12 \text{ pounds of crude/gallon})}$$

= 0.0192 pounds of sulfur per pound of crude

In other words, the sulfur plant could handle up to a 1.92 percent sulfur crude oil.

The sulfur plant uncontrolled and controlled emission estimates are shown in Table 13. All of these emissions exit through Stack #1.

Table 13. EMISSIONS FROM THE SULFUR PLANT (TPY)*

CONTAMINANT / SOURCE	PARTICULATES		SULFUR DIOXIDES		NITROGEN OXIDES		HYDROCARBONS	
	Uncontrolled	Controlled	Uncontrolled	Controlled	Radian	AP-40	Uncontrolled	Controlled
Sulfur Burner	12.1	12.1	53.8	53.8	88.4	62.9	4.6	4.6
Sulfur Plant Incinerator Uncontrolled	----	----	11,480	NA	-----	-----	----	----
Sulfur Plant Sulfur Removal Process	----	----	---------	287.0**	-----	-----	----	----
TOTAL	12.1	12.1	11533.8	340.8	88.4	62.9	4.6	4.6

*For calculations and assumptions used to determine values used for this table, see Appendix 13.
**Emissions are calculated as SO_2. In actuality, emissions will be as carbonyl sulfide (COS).

NA = Not Applicable

M. STEAM GENERATION

As mentioned previously, the steam requirements for the refinery will be generated from three generators, each capable of supplying 50 percent of the refinery needs. The boiler feedwater makeup will be supplied by process water.

The combustion contaminants from the steam generators will exit through Stack #3 and are shown in Table 14.

Table 14. EMISSIONS FROM THE STEAM GENERATORS (TPY)*

PARTICULATES	SULFUR OXIDES	NITROGEN OXIDES		HYDROCARBONS
		Radian	AP-40	
132.6	589.2	965.1	986.9	53.7

*For calculations and assumptions used to determine values used for this table, see Appendix 14.

N. HREC MISCELLANEOUS COMPRESSORS AND PUMPS

There will be a centrifugal compressor which will operate on the fuel gas system. This compressor will be equipped with simple mechanical seals which will vent any escaping gases to the flare system. This system will also have a centrifugal pump equipped with a simple mechanical seal. The fuel gas produced by the process units will be amine scrubbed and then fed to a collecting main and passed to a central knockout vessel. From this vessel the mixed fuel gas stream will be delivered to the process units. In order to transfer the refinery fuel oil to its necessary destination, a motor-driven pump is supplied. The fuel oil will be stored in tanks in the utility area near the boiler house.

All of the HREC refinery products will have final storage before marketing at the SMT facilities adjacent to the refinery site. Each of the products has a pump to transport it to storage. This is a total of seven pumps.

Several other systems exist at the refinery which are not important from an air pollution standpoint but are shown for completeness. Two compressors, one turbine and one motor-driven, with one receiver and one dryer will be provided to supply plant and instrument air. Each compressor will deliver the required quantity of instrument air and a limited amount of plant air. One compressor will be in normal operation while the other compressor will be on automatic start on pressure control.

During a unit shutdown, when more plant air will be required, both machines will be in operation.

The HREC plant will maintain a diesel generator to act as an emergency electrical system. Since the unit will only be used in cases of emergency, emissions were not calculated.

Emissions from the various pumps and compressors described above will be in the form of fugitive hydrocarbons and are listed in Table 15.

Table 15. MISCELLANEOUS HREC EQUIPMENT EMISSIONS (TPY)*

UNIT AND SERVICE	HYDROCARBONS	
	Uncontrolled	Controlled
Refinery Fuel Gas Compressor	1.9	1.9
Refinery Fuel Gas Pump	1.9	1.9
Fuel Oil Pump	0.7	0
Seven Product Pumps	6.1	2.9
TOTAL	10.8	6.7

*For calculations and assumptions used to determine values used for this table, see Appendix 15.

O. EMERGENCY FLARE SYSTEM, BLOWDOWN, STARTUPS, SHUTDOWNS

It is not possible at present to operate a refinery continuously without having to shutdown and start up units or without having a certain number of emergencies requiring the release

of large quantities of gases or without generating quantities of waste gases during normal operation. In order to dispose of these gases safely with a minimum quantity of pollutants entering the atmosphere, the gases must be incinerated in an emergency flare system. A typical flare system consists of the collecting lines or blowdown lines from the various units. All pressure vessels, some pump seals and some pressure relief valves are vented to this blowdown system along with any source of waste gas that requires incineration.

Between the unit and the flare, the gases pass through a knockout pot to eliminate any condensate. The condensate is usually pumped to a slop oil tank which, after settling, is pumped back to the crude unit for reprocessing. In the proposed HREC system, there will be two flares of differing types. One will be a ground type which is low and enclosed in a louvered shroud to eliminate noise and light. The other is an elevated smokeless type.

A water seal drum is placed ahead of each flare. The drum associated with the ground flare regulates the incoming gas pressure to allow combustion up to a given flow rate. This procedure will take care of normally generated waste gas flows. In the event of a necessity for "dumping" a unit in an emergency, the amount of gas in excess of the ground flare capacity will go to the elevated flare. In the event of an upset in the sour gas system, this gas would be dumped directly to the elevated flare to ensure that contamination of the normal refinery generated gas does not occur. The sour gas will be routed through a separate stainless steel valve and flange system to the burner.

Each flare requires steam to inspirate sufficient air to burn the gases completely and smokelessly. An automatic demand system provides the proper quantity of steam. A manually operated valve can add additional steam, if necessary, to improve

combustion conditions and reduce a smoky condition that might temporarily arise. Each of the flares will be on a continuous pilot fueled by refinery fuel gas.

In a normal start-up procedure for a fired unit, the system is filled with a cold, non-volatile stock such as gas oil which is circulated throughout the system to check proper operation of all equipment and detect any possible leaks that might have been overlooked. The feed is then started to displace the gas-oil and temperatures are gradually brought up to the normal operating point. Start-ups will rarely create an emergency or any great loss of gases to the blowdown system. On a normal shutdown where the standard procedures can be followed, only slightly more gas is released to the flares. However, emergency shutdowns caused by fires, power outages, cooling water failures, etc. can release tremendous quantities of gas to the flares. These are not predictable and may never occur. However, the flare system is designed for handling the worst case and even in an emergency, the amount of hydrocarbons to the atmosphere will be minimal. The ground level flare will be constructed to be capable of handling up to one million pounds of material an hour during an emergency. The combustion zone in such a flare is very large, having a diameter in excess of 20 feet (the authors have observed a ground level flare in Los Angeles with a diameter of approximately 50 feet).

Table 16 shows emission estimates due to piloting and upsets.

P. COOLING TOWERS

HREC will use air as the primary cooling medium. The oil will be routed by pipe through the cooling towers. The towers are designed with the oil-bearing tubes situated atop a four-bladed motor-driven fan. Ambient air is driven past the

Table 16. EMISSIONS FROM THE FLARING SYSTEM (TPY)*

OPERATION \ CONTAMINANT	PARTICULATES	SULFUR DIOXIDES	NITROGEN OXIDES	HYDROCARBONS
Piloting	-0	0.5	0.2	-0
Upsets**	0.15	35.00	2.00	0.2
TOTAL	0.15	35.5	2.2	0.2

*For calculations and assumptions used to determine values used in this table, see Appendix 16.

**These upsets are associated with startup and shutdown.

tubes, cooling the material. Air cooling is less efficient than water cooling but is desirable from an air pollution standpoint because it is not a source of hydrocarbon emissions as is water cooling. Emissions result when water is used due to the fact that salts in the circulating water cause accelerated corrosion of the heat exchanger tubes. Leaks in the tubes cause the water to become contaminated with oil which is emitted from the water cooling tower. In order to reduce exchanger tube problems, all refining tube seals will be welded.

Foster Wheeler has calculated that air cooling can handle all of the refinery cooling requirements as long as the ambient air temperature remains at or below 90°F. During the summer months, the daytime temperatures will exceed 90°F and the water cooling system will have to be used. It has been estimated that the hydrocarbon emissions which will result from the use of the water cooling system will be three tons/year (see Appendix 17).

Q. OIL-WATER SEPARATION

Refineries generate significant amounts of process water which has been in contact with oil and chemicals. In addition, rainfall which has fallen on the refinery site may become contaminated with these same products. These wastewater streams require extensive treatment before discharge into a body of water.

The HREC refinery will be located in an area of relatively high rainfall. As a result, Foster Wheeler has developed a system to handle surges. The process drains from each of the major process units will all be underground and closed. In order to fully enclose the sewers, HREC should be encouraged to install water traps on the drains. During dry weather, process water will drain to the low total dissolved solids (LTDS) system. The sewers will transport the process water containing approximately 500 ppm of oil at an average rate of 230 gallons/minute to a diverter. After passing through a trash rake, the process water enters the diverter.

The diverter is a box approximately ten feet square and eight feet deep and is divided into two chambers by an underflow baffle. During normal operations the baffle does not become important, since the water flows directly to the bottom of the chambers where a pump transfers the water directly to the final separator.

During a severe storm (five to six inches of rain in 24 hours) rainwater will fall in the process unit areas and enter the process sewer system. The amount of water entering the LTDS system and the diverter could reach 500 gallons/minute. Since the final separator pump can only handle 250 gallons/minute, in such cases the diverter capacity will be exceeded and large amounts of water will build up in the unit. An overflow pond system is located downstream of the underflow baffle to handle these situations. The water in the diverter is forced under the baffle as the level increases. Because the oil has a lower density than water, the majority of the oil will remain in the skimming section instead of moving under the baffle. This oil will be collected by a Brill rope skimmer. The rope is made of a permeable material which continuously rakes up the oil. As a result, Foster Wheeler believes the overflow water reaching the pond will only have 150 ppm of oil. Once the storm has passed and the process water rate has been reduced to normal, the storm water diverted to the overflow pond will be pumped back to the diverter for processing through the final separator.

Rain falling in the tank farm will be impounded within the spill dikes for dispersal at a controlled rate. If testing shows the impounded water to be clean and free of oil, the water will be drained through a network of ditches and sewers to the LTDS wastewater holding basin. If the impounded water shows traces of oil contamination, it will be drained to the LTDS sewer system at a controlled rate for treatment.

Clean storm water runoff from open areas are not subject to oil contamination. This water will travel through a series of ditches and storm sewers to the LTDS created water holding basin for use as fresh water make-up.

The second sewage and treatment system, termed the high total dissolved solids (HTDS) system, serves such units as boiler blowdown water, cooling tower blowdown, desalter water and other streams which contain a large amount of dissolved minerals and solids. There is no diverter on this sewer system. After passing through a simple trap, this water enters another final separator at the rate of 342 gallons/minute. FWEC is still unsure as to whether there will be two final separators or only one.

The final separators will be corrugated plate interceptors (CPI) with a fixed roof covering. Corrugated plate oil separators were developed in the years 1964 through 1966 in the Netherlands. The development was a joint effort by the Royal Dutch Shell Oil Company and Pielkenrood-Vinitex. The heart of a corrugated plate separator is the corrugated plate pack. In it a number of corrugated plates--each 0.05 inches thick--are mounted parallel to each other at a distance of three-fourths of an inch. For ease of handling during installation, the plates are contained in a box like structure. The plate pack is installed at an angle of 45° in a process tank. The fluid flow to be separated passes between the closely spaced plates in the pack. Laminar flow conditions are established while the fluid passes from pack inlet to pack outlet. This is an ideal condition for gravity separation of the disimilar components in the fluid.

The light components in the fluid being treated flow upwards into the tops of the corrugations and rise to the high end of the plate pack. From there they rise to the top of the process tank where they are removed. The heavy components of the

fluid will settle in the bottoms of the corrugations and slide to the low end of the plate pack. From there they fall into the bottom of the process tank to be discharged intermittently through a blow-off valve.

The flow of fluid is in a downward direction through the pack, when removal of light components is the principal objective of the separation process (see Figure 9). When heavy components predominate and they need to be removed, the fluid flow is upwards through the pack (see Figure 10).

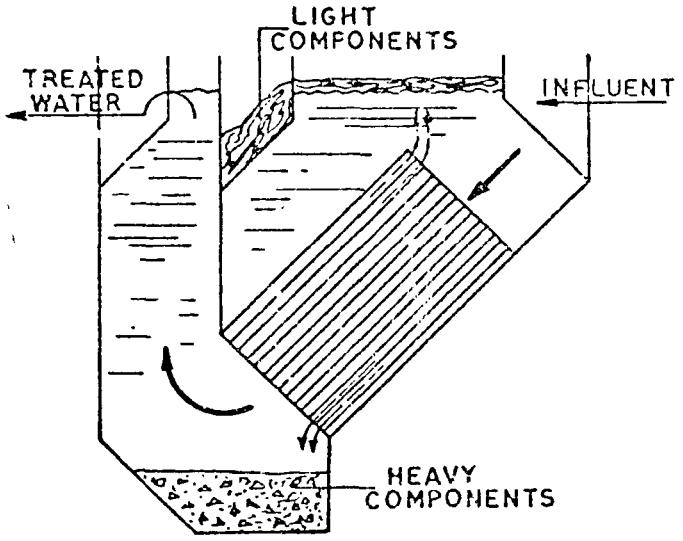

Figure 9. LIGHT COMPONENTS SEPARATION

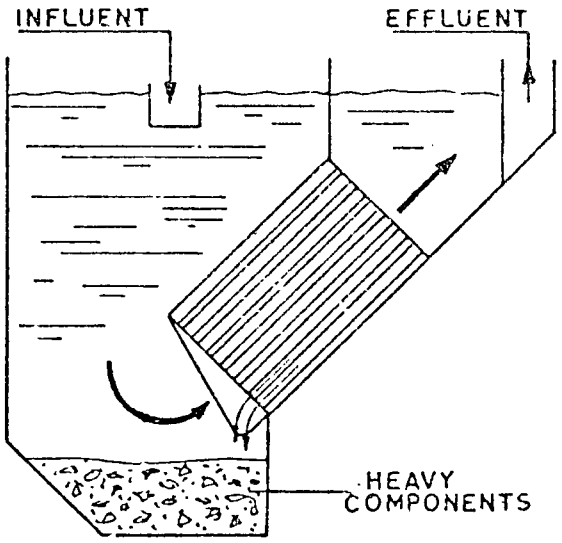

Figure 10. HEAVY COMPONENTS SEPARATION

Advantages of this sytem over an API oil skimmer are: (1) lower operating and maintenance costs; (2) smaller space requirements because liquid detention time in the CPI is only three to ten minutes instead of the one to six hours necessary in a conventional settling device; (3) because the unit is so compact, a fixed roof can easily and effectively be installed; and (4) the relative low cost of such a unit allows installation on separate process streams instead of routing to one central unit.

The effluent from the CPIs will flow into air flotation units where fine droplets of oil still remaining and finely divided solids are removed. These particles, being lighter than water, do not settle out easily.

In the flotation process a colloidal flocculant and air under pressure are injected into the wastewater. The stream is then fed to a clarifier through a back pressure valve that reduces the pressure to atmospheric. The dissolved air is suddenly released in the form of tiny bubbles that carry the particles of oil and solids to the surface where they are skimmed off by mechanical flight scrapers.

Leaving the air flotation unit, the water will enter a biological oxidation unit. In this unit active biological sludge, with mechanical aeration, rapidly consumes the organic substances in the water. The effluent from the biological oxidation unit flows to a holding basin for storage prior to being recycled to cooling water makeup and to fresh water treating for reuse.

Table 17 shows the emissions attributable to the waste water facilities. Sources of emissions to be considered are the LTDS diverter, overflow pond and final separator; and the HTDS final separator. The process sewers are all underground and closed, and do not constitute a problem. The air flotation systems will be under pressure and do not cause emissions.

Table 17. EMISSIONS FROM OIL-WATER SEPARATION (TPY)*

UNIT	HYDROCARBONS	
	Uncontrolled	Controlled
LTDS System	328.5	20.0
HTDS System	449.4	18.0
TOTAL	777.9	38.0

*For calculations and assumptions used to determine values used for this table, see Appendix 18.

R. SOUR WATER STRIPPER

"Sour water" is the refinery parlance for water or condensate bearing or containing sulfur compounds such as hydrogen sulfide or mercaptans. This water comes from the crude distillation unit and many other small sources such as knockout drums in the flare system.

The sulfur-bearing water is heated by a steam reboiler to a temperature at which the sulfur compounds are volatized and leave as overhead and the "stripped water" goes out as bottoms. This water is suitable for use in the desalter unit for crude distallation feed preparation or can be routed directly to the process water disposal system. In the HREC refinery the stripped water will be pumped back to the crude unit and used in the crude desalter unit. The overhead passes through an amine scrubber and the H_2S, when stripped, forms part of the acid gas feed to the Claus unit.

Foster Wheeler is still undecided whether they will design two sour water strippers, one operating and one spare, or use one stripper and a feed surge drum.

There are no sources of emissions associated with this unit. A possible surge drum would be enclosed. The on-off pump which transports the recovered water back to the desalter is not a source of emissions.

S. SLUDGE INCINERATOP

Primary sludges are generated by removal of suspended solids from process wastewater by gravity separation in the CPI and air flotation units. These insoluble solids consist of such things as sand and gravel, bits of iron rust, bits of metal, carbonaceous material, small particles of asphalt and similar particulates.

Secondary sludges are composed primarily of water and organic matter with little ash, sulfur or hydrocarbons.

Foster Wheeler has stated that while several new systems for treating sludges without incineration are being examined for possible application, the best currently available technique for disposal of this material is some type of incinerator.

Use of an incinerator eliminates objectionable odor-producing materials from the sludge before it is sent to a land-fill area. The selection of a sludge incinerator must take into account the types and quantities of sludge materials to be processed as well as the emission constraints which will be imposed on the flue gases from the unit. The two major types of sludge incinerators which are currently used in refinery applications are: (1) fluidized bed units; and (2) multihearth units.

1. Fluidized Bed Incinerators

The use of fluid bed incinerators has proven an effective technique for sulfite sludge disposal in the paper industry for many years. Only recently, however, has this process been applied to refinery wastes. The first such unit was constructed at the Mandan, North Dakota, refinery of American Oil Company (AMOCO) in 1969. This initial unit was constructed to handle oily API separator sludge bottoms, tank bottoms, stable emulsions and spent caustic solutions. Spent caustics and oily sludges are fed to separate steam-heated vessels where they are kept in a more or less homogeneous fluid state by mixers. A blower introduces air through a bed of hot sand and fuel is admitted until the bed temperature reaches 1300°F. When primary sludge is burned, the fuel will be oil. Secondary sludge will use refinery fuel gas. Oily sludges and spent caustics are fed to the bed at such a rate to maintain a constant bed temperature. Sludge having a heating value of 57,000 BTU per gallon proved to be adequate at the

Mandan installation. As the sludge is burned, solids accumulate in the fluid bed while gaseous products discharge through the gas-cleaning system. Any sodium oxides which are formed react with combustion products to form sodium carbonate and sodium sulfate, both of which stay in the bed. Ash is periodically withdrawn from the bed as it accumulates. Ash solids are inert and are well suited to land fill.

Sludge water (as steam), gaseous products of combustion, and suspended fine ash particles pass through a process cyclone which either returns solids to the bed or discharges solids with the excess bed material. From the cyclone, gases are passed through a water scrubber. Stack gases to the atmosphere consist primarily of water vapor, nitrogen, oxygen, carbon dioxide, a few tenths of a part per million of sulfur dioxide and less than 0.03 grains per day SCF of particulate matter.

The advantages of the fluid bed incinerators systems are: (1) they are relatively low polluting and odor-free, with less than 0.03 grains particulate per dry SCF; solids formed are inert; (2) the units are simple and relatively inexpensive to operate if the sludge has sufficient heating value; and (3) many types of sludges can be processed including waste oils and biological treating sludges.

2. Multihearth Units

The most extensively used system is the multiple-hearth furnace. After preliminary diverting to reduce the sludge moisture content from its original 90-plus percent to about 30 to 50 percent, drying and combustion are accomplished in the multiple-hearth incinerator, shown in Figure 11. The multiple-hearth furnace consists of a circular steel shell surrounding a number of solid refractory hearths and a central rotating shaft to which rabble arms are attached. Each hearth has an opening that allows

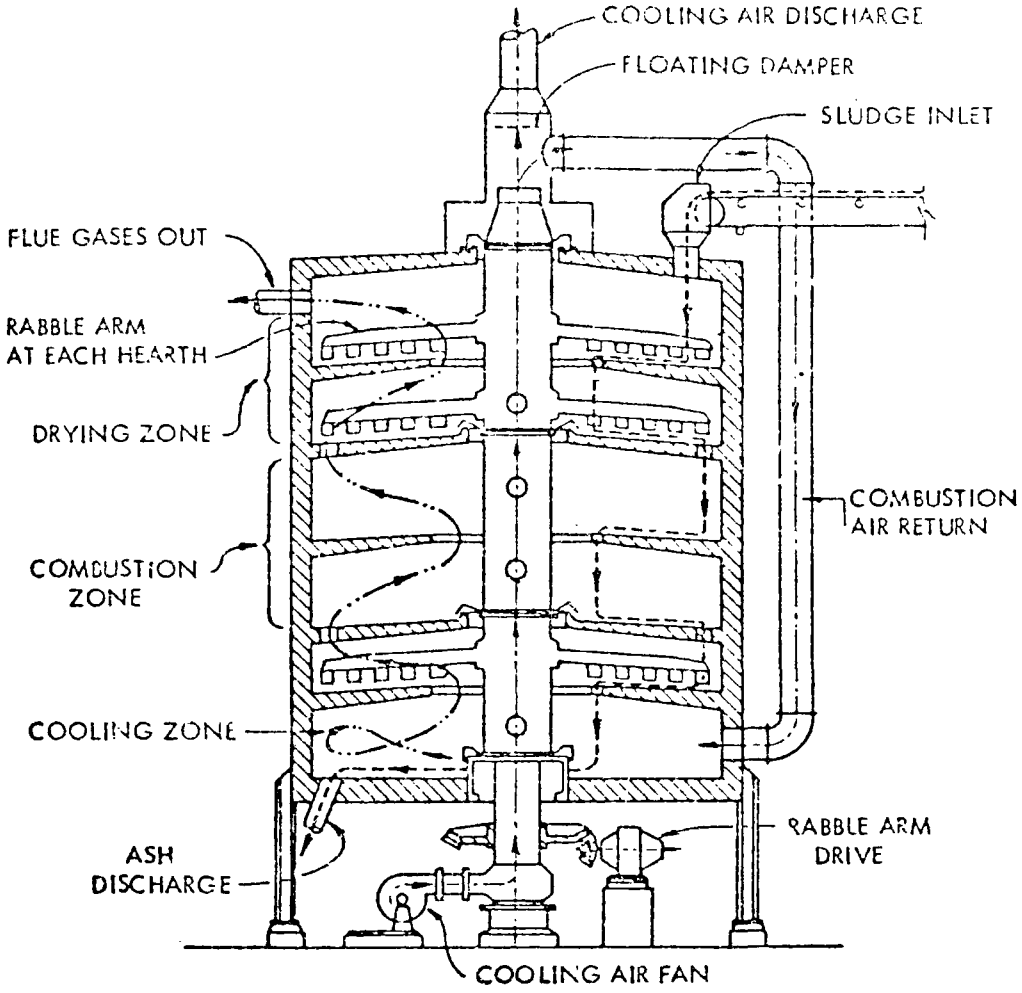

Figure 11. MULTIPLE-HEARTH SLUDGE INCINERATOR

sludge to be dropped to the next lower hearth. Many or all of the hearth stages have oil-or gas-fired burners to supply additional heat to the furnace. The rotating central shaft and rabble arms break up the large sludge particles to induce rapid and complete combustion.

Intermediate hearths provide a high-temperature zone (1600 to 1800°F), where combustion of the fixed carbon takes place. The bottom hearths of the furnace serve as a cooling zone (600°F), from which the exhaust gases rise to the top of the unit and then are ducted to a scrubber. A minimum of 50 percent excess air is required to burn the sludge properly. The fly ash slurry and ash from the incinerator are discharged through a hopper and transported to a landfill or lagoon.

As shown in Figure 11, a separate air system cools the central shaft. A forced-draft cooling air fan supplies air to the bottom of the shaft. The cooling air is heated as it passes through a cooling air discharge duct, separate from the incinerator flue gas stack.

Particulate emissions are most effectively controlled by a wet scrubber. Venturi and impingement types of scrubbers have enabled incinerators to successfully meet emission standards.

In the venturi scrubber, the particulate-laden gas passes through a duct throat, where high velocities of 60 to 180 m/sec (200 to 600 fps) are attained at pressure drops of 50 to 75 cm (20 to 30 inches) water gage. Coarse water spray, injected into the duct throat at the rate of .68 to 1.36 liters per cubic meter of gas (five to ten gallons per 1000 cubic feet of gas) atomizes and impacts with the particulate.

In impingement towers, the large particulates are removed by impingement on wet surfaces and contact with water spray in an area below the filter bed. The gas containing the remaining

particulates then passes upward through a bed of spheres. These particulates are subjected to increased velocities in the interstices of the bed, which results in their impingement upon the surfaces of the spheres.

Continuously running sewage sludge incinerators require little or no auxiliary fuel to attain complete burnout of the sludge. Many incinerators are, however, shutdown during the weekend and must be restarted. To avoid excessive particulate emissions during start-up, the hearths of these units must be preheated with gas- or oil-fired heat before sludge is added.

Table 18 estimates the emissions from the multiple-hearth unit. Insufficient information was known about the exit gas from the incinerator to apply the fluid bed particulate emission factor.

T. CRUDE OIL UNLOADING

As discussed earlier in this report, the crude oil to be processed through the refinery will arrive at the Security Marine Terminal by ocean-going tanker. The terminal will have two berths, each capable of handling an 85,000 dead weight tons (DWT) tanker. The refinery crude oil requirements will be 175,000 barrels/calendar day.

$$\frac{(175{,}000 \text{ barrels/day})(42 \text{ gallons/barrel})(7.12 \text{ pounds/gallon})}{(2240 \text{ pounds/dead weight ton})}$$

$$= 23{,}363 \text{ dead weight tons/day of crude oil}$$

Tankers vary in size from old-style units of 28,000 up to 80,000 (DWT) capacity into supertankers of up to 250,000 DWT.

The newer tankers and supertankers contain many air and water pollution control measures which are not available on the older tankers. These include segregated ballast and inert gas blanketing. Regrettably, no existing port facility in the United States is equipped

Table 18. EMISSIONS FROM SLUDGE INCINERATION (TPY)*

CONTAMINANT / UNIT	PARTICULATES		SULFUR DIOXIDES		NITROGEN OXIDES		HYDROCARBONS	
	Uncontrolled	Controlled	Uncontrolled	Controlled	Uncontrolled	Controlled	Uncontrolled	Controlled
Multiple-Hearth Unit	59.3	1.8	0.6	0.5	3.6	3.0	0.9	0.6

*For calculations and assumptions used to determine values used for this table, see Appendix 19.

to handle supertankers. Current practices call for the supertankers moving out of port and having barges brought out to unload the product. This is a process called lightering. In light of these facts, it is unlikely that the Security Marine Terminal will be capable of handling supertankers. Instead, more conventional types of tankers will be used. For the purpose of this discussion, assume that 80,000 DWT tankers will call at the terminal 107 times a year. An 80,000 DWT tanker was selected because tanker registration data did not indicate the existence of an 85,000 DWT unit.

The emissions from a crude tanker in berth will result from boiler stack contaminants, venting of the hold during ballasting and possible hold purging.

After maneuvering and hotelling of the tanker, the crude oil is pumped out of the hold. This process requires operation of the ship's boilers. As the liquid leaves the hold, it can be displaced by either air or combustion gases from the boilers. The use of combustion gases is a form of inerting and is the preferred method. Inerting reduces the oxygen concentration in the cargo hold to a value below the flammability limit for a hydrocarbon-oxygen mixture. By operating the boilers while in port, sufficient flue gas can be generated to be cooled and directed into the cargo areas. However, boiler flue gas contains SO_2 which is corrosive. A scrubber is thus installed for SO_2 removal which can be accomplished efficiently using seawater as the absorbent.

If proper unloading procedures for the cargo are used, there will be minimal, if any, release through the pressure vents in the top of the cargo hold. Even in the event of such a venting, the gases vented would consist primarily of the inert gas instead of hydrocarbons. Until equilibrium is reached in the hold, a vertical stratification of gases exists in the cargo hold. The hydrocarbons tend to remain at the bottom next to the liquid interface while the top of the hold at the vent consists of the inert

gases. If ballasting is performed within several hours of unloading, equilibrium will not have been reached.

The purging process efficiently flushes the empty oil tank with scrubbed combustion gas in a short time. For one cargo tank a complete atmospheric change can be accomplished in approximately 80 minutes, with a complete tanker requiring between 8 and 12 hours. A normal purging operation encompasses three complete atmosphere changes and hence requires about four hours per tank.

Once a tanker is in operation and the cargo hold contains an inert gas and hydrocarbon mixture, there are two conditions suggesting a need for purging the hold: (1) to restore a satisfactory inert atmosphere in the hold; (2) to reduce the hydrocarbon concentration before personnel enter the cargo compartment for inspection or maintenance; (3) to gas free after tank cleaning prior to entering drydock; and (4) to gas free tank cleaning if a special cargo is to be back loaded.

Under all conditions, purging results in a substantial emission of hydrocarbons. Estimates of the maximum emissions from a purge are approximately 60,000 pounds/visit for a 100 percent purge of all the holds of a 120,000 DWT tanker. Estimates are not provided for an 80,000 DWT tanker. Available information states that no United States tanker of this weight class is equipped with an inerting system and therefore are incapable of being purged. There should be no reason to purge during berth in the harbor unless in an extreme emergency and every effort should be made to ensure that the practice is not used. Due to the infrequency of the operation, the effects of purge at berth will not be shown.

Ballast is added to the ship during or after discharge of the cargo to assure safe operation of the tanker. It is common practice to ballast tankers to approximately 35 percent of their dead weight tonnage for open sea travel. This is usually done in two stages with 10 percent to 20 percent ballasted in berth and the re-

mainder when the tanker is underway. However, in times of severe winds or high seas, all ballasting may be completed at berth. New ships contain segregated ballast compartments to avoid contamination of the water. In order to reduce the amount of contamination which can result from unsegregated ballasting systems and to reduce the amount of onshore ballast storage necessary, a technique called "load on top" was developed a few years back. A conversation with Mr. Jim Dailey of Standard Oil of California in El Segundo described the procedure as follows. By the time crude oil arrives in port, the hold has been stratified into basically three layers. On top is the crude oil, below which is the bottom sediment and water (BS&W) and on the bottom is the water. The crude oil is pumped out of the tanker hold through a crude oil exit near the tank hold bottom until the BS&W level is reached. This level is noticeable due to a color change. The crude oil pumping stops and a bottoms pump draws off the water from the hold bottom until the BS&W "color" again appears, at which time all pumping from that hold stops. After each of the tanker holds have been emptied in this manner, the BS&W from each hold is concentrated in one hold and the necessary extra ballast is added. Before reloading of crude oil takes place, all ballast water which by now has again stratified in the bottom of the hold is removed except for the BS&W. Crude oil is then "loaded on top" of the BS&W through the crude oil exit. A degree of mixing takes place causing a portion of the BS&W to remain in suspension during transit and leave with the oil. The crude oil tankage is equipped with agitators to keep it in suspension. The BS&W is then removed in the crude desalter.

Another source of emissions from tankers is venting. Unlike purging which is a purposeful voiding of the vapors in the hold, venting (or breathing) is an unavoidable loss due to pressure fluctuations, and in the case of a non-inerting system can result

in hydrocarbon losses. Venting is not a problem on an inerting ship. The pressure vents on such a vessel are set at high levels to ensure that the combustion gases do not escape. For the purposes of this discussion, consideration is only given to emissions resulting from unloading of crude oil. The amount of material emitted from the hold would be a function of wind, temperature, pressure fluctuations, hydrocarbon vapor buildup, movement of the ship and the amount of leakage from the cargo spaces to the atmosphere.

Another minor source of emissions is the refueling of the tanker.

In the report prepared by PES discussing the impact of the unloading of Alaskan crude oil at California ports, no problems were discovered associated with the unloading of sour (greater than 1 percent) crude.

For the figures in Table 19, the controlled condition was taken to be a tanker with between 15 and 18 percent segregated ballast with inert gas blanketing which did not practice purging and does not vent hydrocarbons. The uncontrolled case will include a non-segregated ballast requiring the taking on of 20 percent of ballast in port and no inert gas blanketing resulting in the venting of hold gas containing 5 percent hydrocarbon vapors. Emission factors used for this study were generated by PES in a report Air Quality Analysis of the Unloading of Alaskan Crude Oil at California Ports, R. J. Bryan and others for EPA, Office of Air Quality Planning and Standards, Research Triangle Park, North Carolina.

U. PRODUCT LOADING

HREC is equally as unsure of their buyers as they are of their sources of crude oil. HREC is reluctant to sign a contract

Table 19. EMISSIONS DUE TO CRUDE OIL UNLOADING
SHORT TONS PER YEAR (TPY)*

CONTAMINANT / OPERATION	PARTICULATES		SULFUR DIOXIDES		NITROGEN OXIDES		HYDROCARBONS	
	Uncontrolled	Controlled	Uncontrolled	Controlled	Uncontrolled	Controlled	Uncontrolled	Controlle
Boiler Operation	28.0	25.5	291.6	265.8	126.5	115.3	3.9	3.[illegible]
Refueling	-----	-----	------	------	------	-----	Neg.	Neg.
Venting	-----	-----	------	------	------	-----	53.4	-0
Ballasting	-----	-----	------	------	------	-----	105.8	-0
TOTAL	28.0	25.5	291.6	265.8	126.5	115.3	163.1	[illegible]

*For calculations and assumptions used to determine values used in this table, see Appendix 20.
**If the inerted tanker practiced 50 percent purging at every visit, the emissions would use to 534.3 tons/year (see Appendix 20).

Uncontrolled - non-inerting tanker using a non-segregated ballast.

Controlled - tanker containing between 15 and 18 percent segregated ballast and inert gas blanketing.

guaranteeing delivery of a product commencing on a certain day until they are certain of a starting date for the refinery. Several possibilities exist which are discussed below. The reader should be advised that except for the LPG loading rack, all other discussion of marketing schemes and associated emissions are hypothetical.

1. Liquid Petroleum Gases (Propane and Butane)

LPG gases will be distributed through a tank car loading rack. This loading rack will be a fully enclosed system. Such systems connect the vapor return line overhead to the tank car. Filling displaces these vapors back to the storage bullet which is a high pressure tank preventing venting of the vapors. The recovered vapors gradually condense back to the liquid state. The only source of emissions will be vapors trapped in the filling and return lines after shutoff. These vapors cannot be calculated but are thought to represent an insignificant amount.

2. Tank Truck Loading Rack

While not specified in the plans, FREC and FWEC do not deny the possibility that a truck loading rack may prove necessary. However, preliminary marketing studies do not anticipate this requirement to be very high. If a truck loading rack proves necessary it will be designed with a maximum capacity throughput of less than 20,000 gallons per day which would exempt it from any anticipated rule restrictions. Therefore, it would operate uncontrolled. Vapor recovery systems exist for units even this small. Small bulk plants with similar throughputs utilize the vapor balance control technique.

3. Pipeline

Several of the products may leave by pipeline. Emissions from such a source are relatively small, primarily being restricted to pump seals and valves.

4. Marine Barge Loading

FWEC and HREC are confident that most, if not all, of the products will be marketed through the Security Marine Terminal. The marine terminal loading piers will be designed to handle four barges at any one time. Since tankers will not be in port at all times, these two berths will also be capable of handling a product barge. The tankers could be used to transport products but for this study, it has been assumed that barges will handle all products.

Water ballast which may be carried by the incoming product barges will be emptied into onshore treating facilities before taking on cargo. This ballast water will be pumped into the ballast water tanks where sufficient time will be provided for oil-water separation. The separated oil layer will be pumped to the crude tanks for processing. The water layer will be pumped to the ballast water treating system for treatment. The treated ballast water will be stored in tanks for re-use as ballast water for the outgoing crude tankers.

The loading of volatile materials into barges can produce significant quantities of hydrocarbon emissions, so studies have been made into the feasibility of controlling these emissions. The most promising method developed thus far for the volatile loading operation is submerged fill loading combined with the use of a vapor recovery system. This technique has been proven in utilization on truck loading systems, but the physical logistics of the barge loading situation presents a different set of problems which must be solved.

In order to use a vapor recovery system for a barge or ship, modifications must be made to the loading apparatus on the vessel itself, closed gauging systems must be installed, and vapor recovery equipment must be constructed for the on-shore docking facility. Also, a piping system must be constructed to transfer the

product from on-shore storage to the vessel and transport displaced vapors back to the recovery system.

Rather simple changes must be performed to modify the hatch on the cargo tank to make it acceptable to the vapor recovery system. Modifications need not be made to the loading arms themselves, assuming that submerged fill loading practices through internal piping are followed and a good seal is maintained on the loading hatch.

A large number of systems have been tested and proven for on-shore vapor recovery systems. The most popular are refrigeration and absorption systems. Absorbing mediums can be gasoline or lean oil fractions. Certain refrigeration systems may require precondensers to remove most of the moisture and dual condenser systems so that when one condenser is defrosting, the other will be in service. For safety reasons, it is normal practice to build two or more parallel systems for multiple-berth docking facilities. This type of system could prevent an in-line explosion from propagating through the vapor recovery system and into another vessel which was tied in at the dock.

Care should be exercised in the construction of the piping systems to place flame arrestors in sufficient quantity and to avoid oil or product spillage through leaks.

The major problems associated with the use of vapor recovery systems involve potential safety hazards, large initial construction costs and the possibility that high vapor collection efficiencies will not be maintained.

Potential safety problems are always present in a system handling volatile materials. Any proposed vapor recovery system for a marine terminal would have to be approved by the Coast Guard before being constructed or operated. The main safety

features would have to include flame arresters, overfill protection equipment, and a system of spill retention apparatus.

Costs for construction and operation of a marine vapor recovery system to handle a 25,000 tons/hour loading capacity were given in 1976 by an oil company spokesman as follows:

- On-shore facility construction - $10,000-12,000
- Barge modifications - $50,000-100,000/barge
- Operating costs - $2,000,000/year

Other problems with the use of marine vapor recovery systems are those which reduce the total efficiencies of the systems. For instance, depending on the barge mix which is serviced by the port, some vessels may not be equipped with the proper gauging and piping systems for use of the vapor recovery units and may emit hydrocarbon vapors uncontrolled. Other methods of loading which could be utilized on these vessels might include variation of loading rates and "short" loading practices. Vapor recovery system efficiencies may also be reduced due to the necessity of open gauging practices on vessels equipped for vapor control.

FWEC estimated the planned vapor recovery system to be 90 percent efficient for the collection of hydrocarbon vapors. This is a conservative estimate. One of the recovery systems being examined for possible use is a refrigeration system.

The straight refrigeration system is based on the condensation of gasoline vapors by refrigeration at atmospheric pressure. Figure 12 shows the flow scheme of such a system. Vapors displaced from the tanker or barge enter a horizontal fin-tube condenser where they are cooled to -100°F and condensed. Because vapors are treated on demand, no vapor holder is required. Condensate is withdrawn from the condenser bottom and the remaining air, containing only a small amount of hydrocarbon, is vented from the condenser top. The vented gases emitted are very cold and may require heating to minimize the explosive potential from vapors settling in the surrounding area. Cooling for the condenser coils

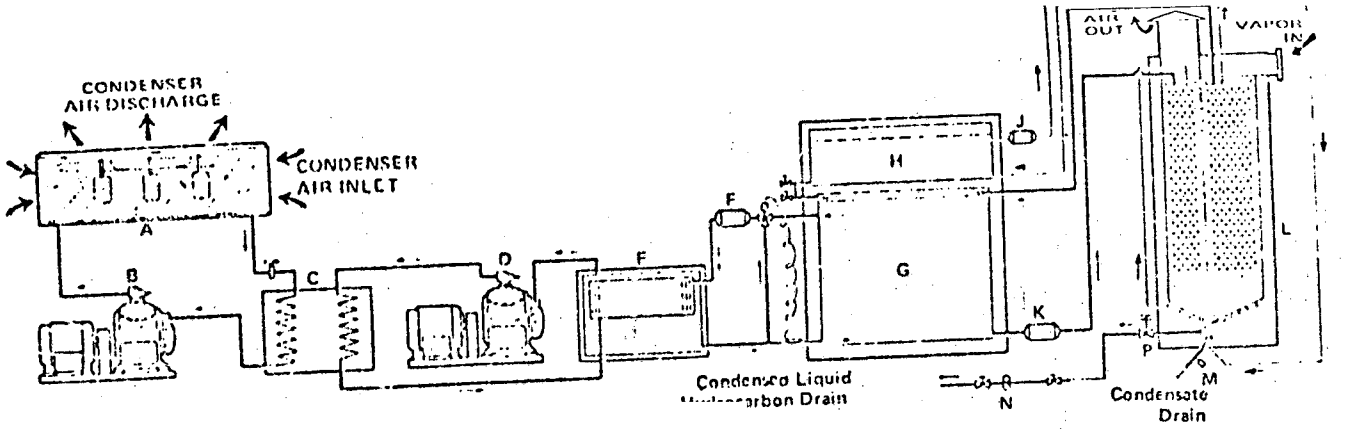

A – AIR-COOLED CONDENSER, HIGH STAGE
B – HIGH STAGE COMPRESSOR
C – HIGH TEMPERATURE EVAPORATOR and LOW TEMPERATURE CONDENSER
D – LOW STAGE COMPRESSOR
E – LOW TEMPERATURE EVAPORATOR
F – BRINE PUMP
G – COLD BRINE STORAGE RESERVOIR
H – DEFROST BRINE and EXPANSION CHAMBER
J – DEFROST PUMP
K – COOLANT PUMP
L – VAPOR CONDENSER
M – ELECTRIC WATER CONTROL VALVE
N – POSITIVE DISPLACEMENT METERING PUMP FOR CONDENSED HYDROCARBONS
P – FLOAT VALVE

Figure 12. REFRIGERATION VAPOR RECOVERY UNIT BY EDWARDS

is supplied by a methyl chloride reservoir. A two-stage refrigeration unit is used to refrigerate the stored brine solution to between -105°F and -125°F.

The straight refrigeration system is based on the condensation of gasoline vapors by refrigeration at atmospheric pressure. Figure 12 shows the flow scheme of such a system. Vapors displaced from the terminal enter a horizontal fin-tube condenser where they are cooled to -100°F and condensed. Because vapors are treated on demand, no vapor holder is required. Condensate is withdrawn from the condenser bottom and the remaining air, containing only a small amount of hydrocarbon, is vented from the condenser top. Cooling for the condenser coils is supplied by a methyl chloride reservoir. A two-stage refrigeration unit is used to refrigerate the stored brine solution to between -105°F and -125°F.

The vapor recovery efficiency of refrigeration systems is again dependent on the hydrocarbon concentration of the inlet vapors. Field tests of a unit with a condenser temperature of -100°F indicate the outlet hydrocarbon concentration is relatively fixed by the condenser temperature at 0.6 percent to 2.6 percent by volume. Typical hydrocarbon recoveries are 93 percent to 97 percent with recoveries reaching 99 percent for saturated inlet vapors. In spite of these numbers, evaluators used the FWEC value of 90 percent to allow for deterioration or operating irregularities of the system.

In order to estimate the emissions associated with the marketing of HREC products, several different schemes must be examined. Investigators decided to compare a complete marine barge loading scheme with a mixed scheme. Case I is a mixed scheme which consists of a 20,000 gallon/day truck loading rack for gasoline

which operates uncontrolled. A pipeline distribution system is assumed to handle 40 percent of each of the products with the other 60 percent being handled through the marine terminal. Case II assumes all products leave by marine barge. Emissions based on these two cases are presented in Tables 20 and 21.

Barges can vary in size a great deal. The very large ocean-going barges are 150 feet wide and 450 feet long while other small barges are only 36 feet wide and 86 feet long. The type of barge which is most frequently used in the Los Angeles area is an oil barge with dimensions of 40 feet wide, 150 feet long, and 10 feet deep. Investigators decided to use this barge size as representative of the large type HREC would employ. This barge type is a non-selfpropelled vehicle requiring one tugboat to transport one barge. The tugboat emissions associated with the movement of these barges within five miles of the refinery appear in Tables 20 and 21.

V. STORAGE TANKS

A total of 62 tanks are planned for the refinery. Eight of these tanks will be on HREC grounds with the remaining storage taking place at the Security Marine Terminal. Table 22 lists the tank number, product stored, type of roof, location, and emission estimates. A miscellaneous tank farm and off-site hydrocarbon estimate is also made. This expresses the emissions associated with six tank farm pumps, a pump for each tank and five valves for each tank.

Table 20. CASE I - MARKETING SCHEME (TPY)*

CONTAMINANT / UNIT	PARTICULATES	SULFUR DIOXIDES	NITROGEN OXIDES	HYDROCARBONS		
				Uncontrolled	Submerged Fill	Vapor Recovery
Truck Loading Rack	----	----	----	45.3	15.0	15.0
Pipeline (40%)	----	----	----	4.2	4.2	1.1
Marine Barge Loading (60%)	----	----	----	530.5**	530.5	53.0***
Tugboat Operations	34.2	25.7	24.0	15.4	15.4	15.4
TOTAL	34.2	25.7	24.0	595.4	565.1	84.5

*For calculations and assumptions used to determine values used in this table, see Appendix 22.
**Uses clean barge emission factor for gasoline.
***Value would be 96.7 TPY if gasoline barges are cleaned at berth.

Table 21. CASE II- MARKETING SCHEME (TPY)*

CONTAMINANT / UNIT	PARTIUCLATES	SULFUR DIOXIDE	NITROGEN OXIDES	HYDROCARBONS	
				Clean Barges	Vapor Recovery
Gasoline	----	----	----	333.6	33.4
Jet A-1 Fuel	----	----	----	465.5	46.5
#2 Fuel Oil	----	----	----	61.7	6.2
#5 Fuel Oil	----	----	----	27.6	2.8
Tugboat Operations	57.2	42.9	40.1	25.7	25.7
TOTAL	57.2	42.9	40.1	914.1	114.7**

*For calculations and assumptions used to determine values used in this table, see Appendix 21.
**Value would be 187 TPY if gasoline barges are cleaned at berth.

Table 22. EMISSIONS FROM HYDROCARBON STORAGE (TPY)*

TANK NUMBER	PRODUCT STORED	TYPE OF ROOF	LOCATION	ESTIMATED EMISSIONS Uncontrolled**	ESTIMATED EMISSIONS Controlled
1-11	Crude Oil	Floating	SMT	1713	166.2
12-24	Propane LPG	Pressure Tank	SMT	NC	NC
25-28	Butane LPB	Pressure Tank	SMT	NC	NC
29-32	Gasoline	Floating	SMT	3048	106.5
33-34	Jet Fuel	Floating	SMT	474	28.0
35-38	No. 2 Fuel Oil	Fixed	SMT	142.5	142.5
39-45	No. 5 Fuel Oil	Fixed	SMT	92.4	92.4
46-47	Naphtha	Floating	HREC	421	14.5
48-49	Light Naphtha	Floating	HREC	1339	15.7
50-52	Gas Oil	Fixed	HREC	34.5	34.5
53-55	Atmospheric Residuum	Fixed	HREC	67.0	67.0
56-57	Refinery Fuel Oil	Fixed	HREC	9.5	9.5
58-59	Slop Oil	Fixed	HREC	27.8	27.8
60-62	Ballast Water	Fixed	SMT	40.9	40.9
Subtotal				7406.7	742.6
Miscellaneous Tank Farm and Off-Sites				87.5	36.8
TOTAL				7497.1	782.3

*For calculations and assumptions used to determine the values used in this table, see Appendix 22.

**Uncontrolled emissions for storage tanks were taken to mean storage in a fixed roof tank.

NC = Not calculated. Since these are pressurized tanks, the only emissions will be from the transfer of material and these emissions are calculated through the pump seal.

Table 23. PUMPS, COMPRESSORS AND IN-LINE SPARES

UNIT AND SERVICE	IN-LINE SPARE
CRUDE UNIT	
Crude feed pump to desalter	Yes
Crude feed pump to heater	Yes
Residuum pump	Yes
Heavy gas oil pump	Common Spare
Light gas oil pump	
Kerosene pump	Common Spare
Heavy naphtha pump	
Reflux drum to collector pump	Yes
Condensed overheads to stabilizing pump	No
Gasoline to storage pump	Yes
Stabilizer reflux pump	Yes
Intermediate reflux pump	No
Bottoms reflux pump	No
Water pump #1	No
Water pump #2	No
Water pump #3	No
Overhead non-condensibles compressor	No
HYDROGEN PLANT	
Caustic scrubber circulating pump	No
Fuel gas compressor	No
NAPHTHA HYDRODESULFURIZER	
Charge pump	Yes
Bottoms pump	Yes
Overheads pump	Yes
Recycle and make-up compressor	Yes
DISTILLATE HYDRODESULFURIZER	
Naphtha circulation pump	Common Spare
Charge pump	
Stripper bottoms pump	Yes
Stripper reflux pump	Yes
Recycle and make-up compressor	Yes
RESIDUUM HYDRODESULFURIZER	
Residuum pump from distillation	Yes
Residuum feed pump #1	Common Spare
Residuum feed pump #2	
Residuum feed pump #3	

Table 23. PUMPS, COMPRESSOR AND IN-LINE SPARES
(continued)

UNIT AND SERVICE	IN-LINE SPARE
RESIDUUM HYDRODESULFURIZER (continued)	
Wild naphtha pump #1	No
Train #1 residuum pump	Yes
Train #2 residuum pump	Yes
Train #3 residuum pump	Yes
Wild naphtha pump #2	Common Spare
Wild naphtha pump #3	
Fractionator bottoms pump	Yes
Fractionator reflux pump	Yes
#5 fuel oil pump	Yes
Fractionator overheads pump	Yes
Make-up compressor #1	Common Spare
Make-up compressor #2	
Recycle compressor	Yes
Low pressure recycle compressor	Yes
DEBUTANIZER REFLUX PUMP	Yes
NAPHTHA SPLITTER REFLUX PUMP	Yes
CATALYTIC REFORMER	
Charge pump	Yes
Separator liquid pump	Yes
DEPENTANIZER	
Overheads pump	Yes
Bottoms pump	Yes
ISOMERIZER	
Charge pump	Yes
Stabilizer overheads pump	Yes
Make-up compressor	Yes
LPG PLANT	
Drum level control pump	No
Inter-stage drum pump	Yes
After cooler pump	Yes
Absorber bottoms pump	Yes
Debutanizer overheads pump	Yes
Depropanizer overheads pump	Yes
Overheads compressor	No

Table 23. PUMPS, COMPRESSOR AND IN-LINE SPARES
(continued)

UNIT AND SERVICE	IN-LINE SPARE
MEROX UNIT (OPTIONAL)	
Charge pump	Unknown
Product pump	Unknown
AMINE SYSTEMS	
1 lean amine pump	No
4 reflux pumps	No
SULFUR PLANT	
Tail-gas cleanup air compressor	Yes
HREC MISCELLANEOUS EQUIPMENT	
Refinery fuel gas compressor	Yes
Refinery fuel gas pump	Yes
Fuel oil pump	Yes
Gasoline product pump #1	Common Spare
Gasoline product pump #2	
LPG product pump	Yes
Jet fuel product pump	Common Spare
#2 fuel oil product pump	
#5 fuel oil product pump #1	Common Spare
#5 fuel oil product pump #2	
EMERGENCY FLARE SYSTEM	
Flare knockout drum pump (centrifugal)	Yes (reciprocating)
WATER COOLING SYSTEM	
Water circulation pump	Yes (PES assumption)
LTDS WATER PUMP	Unknown
STRIPPED SOUR WATER PUMP	No
6 TANK FARM PUMPS	No
62 TANK PUMPS	No

SECTION III. EMISSION ESTIMATE COMPARISONS

In order to obtain the necessary authorities and permits to construct the HREC refinery from the Commonwealth of Virginia, Foster Wheeler developed an estimate of the emissions which could be expected from the operation of this refinery. Foster Wheeler's calculations primarily used AP-42 emission factors. PES used AP-42 only when no other more suitable emission factors could be found. The AP-42 values are based upon an average of measurements made of existing units both new and old.

In the following portions of this section each of the four criteria pollutants which have been quantified are discussed.

A. PARTICULATES

A summary of all particulate sources and their emissions are shown in Table 24. For combustion units, the PES values are slightly higher than those prepared by FWEC. Values calculated for the flare are considered to be relatively insignificant and are not included.

FWEC feels that the AP-42 emission factor of 840 pounds/10^3 barrels oil burned is too high. They argue that modern combustion methods allow more complete combustion and an associated reduction in the amount of condensible hydrocarbons which would leave as particulates. FWEC argues that the emission factor should therefore be more of a reflection of the ash content of the specific fuel oil burned and PES agrees.

Foster Wheeler stated that the ash content of the desulfurized fuel oil to be burned will be 0.013 percent. FWEC estimated that the ash content in the oil constituted 11.7 percent of the total particulates. Based upon this value, FWEC calculated an

Table 24. PARTICULATE SOURCES (TPY)

UNIT	FWEC		PES	
	Uncontrolled	Controlled	Uncontrolled	Controlled
STACK #1				
Residual HDS Heater	NC	69.985	77.4	77.4
Hydrogen Plant Heater	NC	161.252	186.2	186.2
Sulfur Plant Heater	NC	10.567	12.1	12.1
STACK #2				
Naphtha HDS Heater	NC	54.581	63.0	63.0
Distillate HDS Heater	NC	27.189	31.4	31.4
Reformer Heater	NC	110.49	127.1	127.1
Isomerizer Heater	NC	19.002	21.90	21.90
STACK #3				
Crude Distillation Heater	NC	106.671	116.2	116.2
Utilities (Boilers)	NC	114.812	132.6	132.6
SLUDGE INCINERATOR	NC	10.00*	59.3	1.8
CRUDE UNLOADING	NC	NC	28.0	25.5
PRODUCT LOADING	NC	NC	57.2	57.2
TOTAL	NC	684.208	912.4	852.4

*Estimated by the Commonwealth of Virginia

NC = Not Calculated

emission factor of 353.99 pounds/10^3 barrels. These values appear in Table 24 under the FWEC controlled column for Stacks #1, #2, and #3.

In investigating the Foster Wheeler value, PES learned that FWEC had test result data which supported the theory that a correlation existed between the fuel oil ash content and total particulate emissions. Total particulate emissions consist of unburned carbon and inorganic materials (ash) which existed in the oil before combustion. Measurement of stack gases from combustion units demonstrated to Foster Wheeler that the contribution of ash to the total particulate emission rate varied from 10 to 50 percent, depending on the ash content of the oil. Higher ash contents cause the ash contributing percentage to increase. The fuel gas which HREC anticipates using has an ash content which when burned contributes only 10 percent to the total particulate rate.*

Foster Wheeler's use of the value, 11.7 percent was based upon the rounding-off of calculated totals and working backward. PES decided to use the value of 10 percent. Use of the 10 percent value will result in calculations indicating the highest emission values which can be expected under the indicated conditions. PES used the value FWEC estimated for the net heating value of hydrodesulfurized fuel oil of 17,500 BTU/pound. This is a lower value than is normally associated with #5 fuel oil and will result in higher fuel oil usages.

The #5 fuel oil weighs 7.586 pounds/gallon (based upon an API gravity of 24.2) and contains 0.013 percent ash.

$$\frac{10^6}{(17{,}500 \text{ BTU/pound})} = 57.14 \text{ pounds of fuel oil necessary to produce } 10^6 \text{ BTU}$$

*The Foster Wheeler data have been evaluated by the Commonwealth of Virginia and EPA, Research Triangle Park, and will be incorporated into new emission factors.

(57.14 pounds of oil/10^6 BTU)(0.00013 pounds of ash per pound of oil) = 0.0074 pounds of ash/10^6 BTU

Since the ash represents 10 percent of the total particulate emissions:

Total particulate emission factor =

$$\frac{(0.0074 \text{ pounds of ash}/10^6 \text{ BTU})}{0.10} = 0.074 \text{ pounds}/10^6 \text{ BTU}$$

The Virginia State Air Pollution Control Board estimated the particulate emissions from the sludge incinerator as 10 tons/year. The PES values of 59 tons/year uncontrolled and 2 tons/year controlled were obtained by applying the AP-42 emission factor for a multiple-hearth incinerator to the proposed amounts of sludge generated. Comparable calculations for a fluid bed sludge incinerator were not possible since the process is too new to have had emission factors developed. Grain loading after a scrubber is expected to be 0.03 grains/DSCF.

When ocean-going tankers are in port to discharge crude oil, the ship's boilers will burn a considerable amount of fuel oil for the purposes of discharging crude and taking on ballast, inerting, hotelling and maneuvering. The uncontrolled value in Table 24 for crude unloading reflects all boiler contaminants exiting the stack. The controlled value represents the routing of 15 percent of the flue gas into the cargo holds for inerting purposes.

B. SULFUR OXIDES

A summary of all sulfur dioxide sources and their estimated emissions are shown in Table 25. PES values for combustion sources are slightly lower than the estimates made by FWEC, even though Foster Wheeler considered the sulfur content of the refinery fuel gas to be negligible and used the emission factor of 6720 (% sulfur) pounds/10^3 barrels of oil burned appearing in AP-42.

Table 25. SULFUR OXIDES SOURCES (TPY)

UNIT	FWEC		PES	
	Uncontrolled	Controlled	Uncontrolled	Controlled
STACK #1				
Residual HDS Heater	NC	355.7	343.9	343.9
Hydrogen Plant Heater	NC	856.3	828.1	828.1
Sulfur Plant Heater	NC	56.1	53.8	53.8
Sulfur Plant Tail Gas	NC	624.6	11,480*	287.0**
STACK #2				
Naphtha HDS Heater	NC	259.8	280.2	280.2
Distillate HDS Heater	NC	144.4	139.3	139.3
Reformer Heater	NC	584.9	564.4	564.4
Isomerizer Heater	NC	100.9	95.6	95.6
STACK #3				
Crude Distillation Heater	NC	566.5	547.2	547.2
Utilities (Boilers)	NC	609.7	589.2	589.2
FLARE	NC	35.0***	35.5	35.5
CRUDE UNLOADING	NC	NC	291.6	265.8
PRODUCT LOADING	NC	NC	42.9	42.9
TOTAL	NC	NC	15,291.0	4072.2

*This value represents 96 percent conversion efficiency.
**The figure is based upon the designer's claims of 99.9 percent sulfur conversion efficiency. Emissions are primarily as COS and CS_2 and actual operating efficiency may be more on the order of 99.8 percent.
***Estimated by the Commonwealth of Virginia.

NC = Not Calculated

PES calculated values by using mass balances. All sulfur in fuels was assumed to leave the stack as SO_2. Fuel specifications were obtained from Foster Wheeler's submittal data to the Commonwealth of Virginia. The values used were: 82.87 percent heat duty, 132,755 BTU/gallon, 7.586 pounds/gallon, and 0.3 percent sulfur by weight for oil; and 17.13 percent heat duty, 930 BTU/cubic foot, 0.0514 pounds/cubic foot, and 0.025 percent sulfur by weight for gas.

The Foster Wheeler value of 624.6 tons/year of SO_2 emissions from the sulfur plant tail gas is based on a conversion efficiency of sulfur in a Beavon-Stretford process of 99.8 percent. PES used the designer's efficiency estimate of 99.9 percent but concedes that the unit built may not achieve this efficiency.

Table 25 shows a minor discrepancy between FWEC and PES for emissions from a flare. The PES value is slightly higher due to an estimate made for the burning of refinery fuel gas in the pilot.

PES calculated an estimation of emissions associated with the unloading of crude oil. These emissions result from the operation of the ship's boilers during the unloading process.

The sulfur dioxide emissions from the sludge incinerator were considered to be insignificant and are not included in Table 25.

C. NITROGEN OXIDES (NO_2)

A summary of the major sources of nitrogen oxide at the refinery appear in Table 26. The table shows the results of Foster Wheeler calculations and several PES comparisons. The last column is titled "preferred." After comparing Foster Wheeler and PES values for the same unit, a decision was made of which value best represented the emissions from that unit. That value appears in the "preferred" column.

Table 26. NITROGEN OXIDE (AS NO_2) SOURCES (TPY)

UNIT	FWEC		PES			
	Uncontrolled	Controlled	Radian*	AP-40	Other	Preferred
STACK #1						
Residuum HDS Heater	NC		563.4	580.1	NC	563.4
Hydrogen Plant Heater	NC		1355.4	1465.7	NC	1355.4
Sulfur Plant Heater	NC		88.4	62.9	NC	88.4
STACK #2						
Naphtha HDS Heater	NC		460.4	446.4	NC	459.0
Distillate HDS Heater	NC		228.4	192.0	NC	228.4
Reformer Heater	NC		925.2	961.9	NC	925.2
Isomerizer Heater	NC		159.6	125.3	NC	159.6
STACK #3						
Crude Distillation Heater	NC		896.3	941.1	NC	896.3
SUBTOTAL		3868.5**	4677.1	4775.4		4675.7
UTILITIES (BOILERS)	NC	567.0	965.1	986.9	NC	567.0
CRUDE UNLOADING	NC	NC	NC	NC	115.3	115.3
PRODUCT LOADING	NC	NC	NC	NC	40.1	40.1
TOTALS		4453.5	5642.2	5762.3		5398.1

*The Radian factors used are the same as the factors which appear in AP-42.
**Total for all process heaters.

NC = Not Calculated.

Foster Wheeler did not calculate the emissions from each process heater. They stated that it was possible to obtain 0.39 pounds of $NO_x/10^6$ BTU. This factor was applied to the total heat input associated with the operation of the heaters. This results in the value of 3868.5 tons/year which appears in Table 26. PES was not convinced that the FWEC emission factor properly represented the higher NO_x emissions which are associated with the burning of fuel oil. To test the Foster Wheeler factor, PES calculated values for NO_x using both the Radian (AP-42) emission factor for each unit according to its fuel usage and the AP-40 emission factor for NO_x based upon the heat input for each fuel burned in each unit. The NO_x emission totals using these emission factors were 4677.1 and 4775.4 tons/year respectively. The closeness of these figures compared to the Foster Wheeler values convinced PES that the FWEC numbers were too low. The Radian numbers were chosen over AP-40 due to the fact that finding factors on a log-log diagram is less accurate than applying an emission factor.

Evidence is available to show that combustion techniques are on the market that will reduce NO_x emissions from a steam generator to the ranges claimed by Foster Wheeler. The emission factors from Radian and AP-40 were developed before these practices were introduced and do not reflect the improvement. Therefore, the preferred value was the Foster Wheeler number.

The NO_x emission rate shown in the table for crude unloading represents the inerting of combustion gases.

NO_x values for flaring and sludge incineration are relatively small and are not included in Table 26.

D. HYDROCARBONS

Table 27 summarizes all hydrocarbon sources and their emissions. The controlled and uncontrolled values for each process unit appear horizontally. The vertical columns total the potential and actual emissions for each type of refinery equipment and process. The FWEC total, including their estimate of marine terminal losses, is 2750.9 tons/year. The PES total is 2152.6 tons/year.

The primary difference between the Foster Wheeler and PES values lie in emissions from what are commonly termed fugitive sources. Foster Wheeler totalled the AP-42 emission factors for vapor recovery and flaring, pipeline valves and flanges, vessel relief valves, pump and compressor seals, and miscellaneous to arrive at a value of 76 pounds/10^3 barrels refinery capacity. They then reasoned that this factor applied to a refinery containing 18 process units. The proposed HREC refinery will have only 11 of these units, so FWEC modified the factor by multiplying by 11/18.

Foster Wheeler carefully noted in their submittal to Virginia that even though AP-42 emission factors were used, they did not believe that these factors were correct. PES believes that many of the values appearing in AP-42 for refinery emissions do not reflect modern techniques and equipment. AP-42 bases emission factors for these sources on refinery throughput. The number of relief valves, flanges, etc., is not a function of refinery throughput but a function of the number of units in operation at a refinery. Gaseous emission factors for losses through valves and flanges should reflect the number of valves and flanges. This number should be more or less proportional to the number of unit processes to which the hydrocarbons are subjected. A refinery of 150,000 barrels/day which merely distills crude oil, sweetens it

Reproduced from best available copy.

Table 27. HYDROCARBON SOURCES (TPY)

SOURCE AND TYPE	COMBUSTION PROCESSES		RELIEF VALVES		REFINERY EQUIPMENT: BLEND CHANGING		SAMPLING		PUMPS & COMPRESSORS		CONTROL VALVES & FLANGES		SUBTOTAL	
	Uncontrolled	Controlled	Uncontrolled	Controlled	Uncontrolled	Controlled	Uncontrolled	Controlled	Uncontrolled	Controlled	Uncontrolled	Controlled	Uncontrolled	Controlled
Residuum HDS	31.3	31.3	31.9	-0-	0.9	-0-	6.7	-0-	12.2	1.5	81.4	81.4	164.4	114.2
Hydrogen Plant	75.4	75.4	31.9	-0-	0.9	-0-	6.7	-0-	1.6	-0-	81.4	81.4	197.9	156.8
Sulfur Recovery	4.6	4.6	----	---	---	---	---	---	----	---	-----	-----	4.6	4.6
Naphtha HDS	25.5	25.5	31.9	-0-	0.9	-0-	6.7	-0-	3.7	2.9	81.4	81.4	159.1	109.8
Distillate HDS	12.7	12.7	31.9	-0-	0.9	-0-	6.7	-0-	3.5	0.8	81.4	81.4	137.1	94.9
Reformer	50.7	50.7	31.9	-0-	0.9	-0-	6.7	-0-	1.7	0.9	81.4	81.4	173.3	133.9
Isomerizer	8.9	8.9	31.9	-0-	0.9	-0-	6.7	-0-	1.7	0.9	81.4	81.4	131.5	91.2
Crude Unit	50.1	50.1	31.9	-0-	0.9	-0-	6.7	-0-	13.7	2.7	81.4	81.4	184.7	134.7
Utilities	53.7	53.7	----	---	---	---	---	---	----	---	---	-----	53.7	53.7
LPG Plant	----	----	31.9	-0-	0.0	-0-	6.7	-0-	11.4	8.2	81.4	81.4	131.4	89.6
Merox Plant	----	----	-0-	-0-	-0-	-0-	-0-	-0-	1.7	0.1	-0-	-0-	1.7	0.1
Debutanizer	----	----	31.9	-0-	0.9	-0-	6.7	-0-	0.9	0.5	81.4	81.4	121.8	81.9
Naphtha Splitter	----	----	31.9	-0-	0.9	-0-	6.7	-0-	0.9	0.5	81.4	81.4	121.8	81.9
Depentanizer	----	----	31.9	-0-	0.9	-0-	6.7	-0-	1.7	0.9	81.4	81.4	122.6	82.3
Miscellaneous HREC Equipment	----	----	----	---	---	---	---	---	10.8	6.7	-----	-----	10.8	6.7
Flare	0.2	0.2	----	---	---	---	---	---	----	---	-----	-----	0.2	0.2
Sludge Incinerator	0.9	0.6	----	---	---	---	---	---	----	---	-----	-----	0.9	0.6
Marine Terminal	----	----	----	---	---	---	---	---	----	---	-----	-----	------	------
Loading	25.7	25.7	----	---	---	---	---	---	----	---	-----	-----	914.1	114.2
Unloading	4.1	3.5	----	---	---	---	---	---	----	---	-----	-----	163.1	3.5
Cooling Tower	----	----	----	---	---	---	---	---	----	---	-----	-----	3.0	3.0
Drains & Separators	----	----	----	---	---	---	---	---	----	---	-----	-----	777.9	38.0
SUBTOTAL	343.8	342.9	350.9	-0-	9.0	-0-	73.7	-0-	65.5	26.6	893.4	893.4	3594.9	1794.9
Tankage														
#1-11 Crude Oil	----	----	----	---	---	---	---	---	----	---	-----	-----	1713	166.2
#12-24 Propane	----	----	----	---	---	---	---	---	----	---	-----	-----	NC	-0-
#25-28 Butane	----	----	----	---	---	---	---	---	----	---	-----	-----	NC	-0-
#29-32 Gasoline	----	----	----	---	---	---	---	---	----	---	-----	-----	3048	105.5
#33-34 Jet Fuel	----	----	----	---	---	---	---	---	----	---	-----	-----	474	28.0
#35-38 #2 Fuel Oil	----	----	----	---	---	---	---	---	----	---	-----	-----	142.5	142.5
#39-45 #5 Fuel Oil											-----	-----	92.4	92.4
#46-47 Naphtha	----	----	----	---	---	---	---	---	----	---	-----	-----	421	14.5
#48-49 Light Nephtha	----	----	----	---	---	---	---	---	----	---	-----	-----	1339	15.7
#50-52 Gas Oil	----	----	----	---	---	---	---	---	----	---	-----	-----	34.5	34.5
#53-55 Atmospheric Residuum	----	----	----	---	---	---	---	---	----	---	-----	-----	67.0	67.0
#56-57 Refinery Fuel Oil	----	----	----	---	---	---	---	---	----	---	-----	-----	9.5	9.5
#58-59 Slop Oil	----	----	----	---	---	---	---	---	----	---	-----	-----	27.8	27.8
#60-62 Ballast Water											-----	-----	40.9	40.9
Miscellaneous Tank Farm & Off-Site	----	----	----	---	---	---	---	---	79.0	36.8	8.5	-0-	87.5	87.5
SUBTOTAL	-0-	-0-	-0-	-0-	-0-	-0-	-0-	-0-	79.0	36.8	8.5	-0-	7447.1	785.3
TOTAL PES VALUES	343.8	342.9	350.9	-0-	9.0	-0-	73.7	-0-	144.5	63.4	901.9	893.4	11042.0	2582.2
TOTAL FWPC VALUES	NC	315.6	1560										NC	2750.9

NC = Not Calculated

and sends it to storage will have far fewer valves and flanges than a 150,000 barrel/day fully integrated refinery which switches these streams to many different parts of the refinery and many varied process units such as fluid catalytic cracking, alkylation, isomerization and asphalting. Yet, application of the AP-42 emission factors to each of these refineries would generate identical values for both.

After review of the derivation of the AP-42 and Radian emission factors for control valves and flanges, blind changing, relief valves, and sampling, and determination that better emission estimates for these sources were not possible, PES applied the Radian revised emission factors without modification. The emission factor for each fugitive source was divided equally among the 10 major units planned and the optional naphtha splitter at the HREC refinery to be consistent with the tabular format of Section II.

Pump and compressor seal emissions can also be categorized as fugitive sources. Information was provided to PES detailing each pump and compressor and its intended service. The Air Pollution Engineering Manual, Second Edition (EPA AP-40) contains emission factors for seals which are based upon the vapor pressure of the material being handled. PES felt these factors were more representative of emissions than emission factors of pounds/day/seal or pounds/refinery throughput which are used in AP-42 and Radian reports.

PES estimates of emissions from the cooling tower appearing in Table 27 were based on the FWEC view that water cooling will be necessary only in the three hottest months of the year when the air becomes too warm to rely solely on air cooling.

Foster Wheeler incorporated the emissions from the process drains and oil-water separation into the general emission factor. PES divided the streams into two systems, the Low Total Dissolved

Solids and High Total Dissolved Solids systems. Throughputs for each system were known and emissions were estimated for the effect of operating the diverter.

The procedure used by Foster Wheeler to determine the value of 176.5 tons/year of hydrocarbons from the marine terminal is not known. PES divided the emissions into unloading and loading values. Crude oil unloading potentials include venting, ballasting and the burning of oil in the tanker's boiler. The potentials from these sources appear in the uncontrolled subtotal for unloading in Table 27. The controlled value represents segregated ballast and inerting.

For loading of products, PES used the Radian factors for clean barges. The effect of cleaning the barges in berth does not appear in Table 21. This procedure would result in an increase in hydrocarbon losses through the vapor recovery system by 72.3 tons/year.

Foster Wheeler calculated storage losses from tanks using the API equations as they are presented in AP-42. PES used the modified equations developed by Radian which use an adjustment factor. The data used in the equations were the values used by Foster Wheeler. The atmospheric residuum tanks (#53-55) are heated to maintain this highly viscous material at 250°F. PES had to calculate a vapor pressure for this liquid (see Appendix 21).

Table 27 shows a heading titled miscellaneous tank farms and off-sites. PES assumed each tank to have one pump and five valves.

SECTION IV. SUMMARY OF BACT

The total emissions of each pollutant as summarized by PES in Section III reflect, in general, the application of best available control technology (BACT). It is quite possible that these values may still be high for certain units and that utilization of other techniques or technological breakthroughs between the time of this report and construction may make available reductions not discussed here. One problem with BACT is the accessibility of information and the changing nature of technology. Techniques may exist but unless they have appeared in literature or the examiner has been informed of their existence, they will not appear in an evaluation.

The major difference between the Foster Wheeler calculations and PES values are from fugitive hydrocarbon emission sources. It is felt by PES that technological advances in these areas have outdistanced studies of their improved emission potential and that the large difference in values only points up the need for further study in these areas.

The rest of this section briefly summarizes what PES considers to be BACT for each process or type of equipment.

A. COMBUSTION UNITS

1. Particulates

If equipment is carefully designed for good fuel economy, complete combustion can be accomplished. This will minimize the amount of unburned hydrocarbons emitted. Instrumentation to indicate CO_2 and/or excess oxygen should be required to monitor the combustion efficiency. Minimization of unburned hydrocarbons will result in fuel oil particulates consisting primarily of ash.

No effort has been made to install particulate BACT on the stacks. While the stacks will have in-stack opacity meters, these act primarily as a combustion monitoring device. No correlation

can be made at this time between grain loading and opacity, but it is possible that such a relationship may be developed. Multiclones are currently utilized on stacks burning residual fuel oil on the East Coast. Such units, as well as electrostatic precipitators and scrubbers, are not shelf items but must be designed to fit the specific application depending upon what the parameters dictate.

2. Sulfur Dioxide

The combustion of low sulfur treated oil and gas is the best method of controlling SO_2. A residual fuel oil with 0.3 percent sulfur is one of the cleanest fuels of its type currently produced. The content of scrubbed refinery gas (0.025 percent) is an acceptable sulfur value.

3. Nitrogen Oxides

PES considers two-stage combustion and off-stoichiometric combustion to be equivalent control measures which currently exist for application to boilers which can reduce NO_x concentrations to less than 200 ppm.

PES agrees with Foster Wheeler that NO_x control devices for process heaters are not currently on the market. Studies are currently underway to produce a process heater two-stage combustion system. The increased product tube deterioration associated with this process may delay its introduction onto the market. PES has learned that off-stoichiometric combustion is theoretically possible in a multiple burner heater and this avenue should be studied.

4. Hydrocarbons

Since condensible hydrocarbons are considered to be particulate matter, combustion hydrocarbon emissions consist of unburned

gaseous material. Combustion controls to ensure complete combustion should all but eliminate these emissions.

B. SULFUR RECOVERY TAIL-GAS CLEANUP

PES believes that the Parsons engineered Beavon-Stretford process or the SCOT process are the best available sulfur recovery tail-gas cleanup units. The SCOT process is licensed in the United States by Shell Development Company. The process consists of two steps that involve reducing sulfur compounds from the Claus unit to H_2S, followed by recovery of the H_2S in an amine-type system that utilizes a selective solvent. The H_2S rich gas is then recycled through the Claus unit to recover the additional sulfur as a usable product. High down-times associated with plugging have been a problem in the past for thd Pritchard designed system. Careful study should be made before installation of such a process.

Depending on whether you are reading the designer's or the installer's (FWEC) efficiency estimates, the collection efficiency of the Beavon-Stretford process may vary from 99.8 to 99.9 percent. Foster Wheeler is confident they can ensure a 99.8 percent figure but will not guarantee the higher figure of 99.9 percent. The difference between these values is approximately 287 tons/year of SO_2.

C. FLARING

The use of a refinery fuel gas system is both an economically sound process and a procedure which greatly reduces flaring emissions. The use of automatic steam injection helps to improve combustion efficiency and reduce opacity problems. A common procedure which gives added insurance that opacity problems will not result is the use of continuous television monitoring of flare stacks.

D. SLUDGE INCINERATION

Should sludge incineration prove necessary, either the multiple-hearth or fluid bed type unit should be used. The multiple-hearth is the established system and adoption of such a system to cope with the specified qualities of the HREC sludges should prove less difficult than with the newer fluid bed system.

The fluid bed system is more desirable from an air pollution standpoint, but due to the newness of the system, it is difficult to predict if down-time may be higher, resulting in other problems.

The best control system would be a venturi or impinger scrubber of about 12 to 16 inches of water pressure drop, assuming the particle size of the effluent particulate matter is in the normal expected range.

E. MARINE TERMINAL OPERATIONS

1. Crude Unloading

Desirable procedures for tanker crude oil unloading include the use of the load on top procedure to reduce on-shore ballast requirements, segregated ballasting, and inert (combustion) gas blanketing of the hold. Purging should not be allowed in-port. The burning of a better grade of fuel oil in the tanker boilers would improve combustion contaminants emissions. For this, it is necessary to have segregated fuel oil compartments.

2. Barge Loading

A vapor recovery system with a collection efficiency of 90 percent is well within the range of current technology. In fact, values of between 93 and 97 percent can be expected. Careful consideration of the barge mix should be made. A uniform barge type should be chosen if possible to ensure that the vapor re-

covery hose connection will fit the barge hatch connection. If an irregular mix should exist, and the connection not be adaptable to all hatch covers, the effect of the vapor recovery system will be reduced.

F. STORAGE TANKS

Control technology for storage tanks is specified in the standards of performance for new stationary sources, 39 FR 9311 - Requirement for Petroleum Liquid Storage Vessels - March 8, 1974. The EPA, ESED, is presently reviewing the required technology to determine if modifications in the recommended control technology are necessary.

G. OIL-WATER SEPARATION

The use of a corrugated plate interceptor (CPI) and an air flotation system should prove equivalent to any API system. The CPI is growing in popularity due to its smaller area and cost requirements. A CPI can be placed on individual streams eliminating the need for a final separator.

One drawback is that a CPI requires a fixed cover, which incurs the greatest explosion potential.

The diverter on the LTDS system should include a floating roof system consisting of plastic balls or the equivalents to reduce the vapor space on the liquid surface.

H. REFINERY EQUIPMENT

1. Relief Valves

The use of a rupture disc or venting to the flare for any valve with over a one-and-a-half-inch diameter is the best technique.

2. Pipeline Valves, Control Valves and Flanges

Emissions from these sources are a function of the positioning and proper preventive maintenance, surveillance and housekeeping. The best emission control technique for these sources is a well-trained and adequately staffed inspection crew, usually the operators themselves.

3. Pump and Compressor Seals

a. Rotating Shafts

An oil-film mechanical seal is the best control technology. It improves upon the simple mechanical seal by filling the available space with oil to reduce emission possibilities.

b. Reciprocating Shafts

Current evidence indicates that mechanical seals will not work on a reciprocating shaft. The best procedure for controlling emissions from these sources is still the use of packing glands and a good maintenance program. Certain shafts will allow the use of a fitted gland which can vent to the flare. This technique is relatively new and should be further studied for adaptability to other reciprocating shafts.

4. Blind Changing

Blind changing is an on-going operation that is expensive as well as wasteful, and produces a certain amount of hydrocarbons to the atmosphere during occurrence. The best available control technology is a permanent quick-change blind such as the Hamer blind, described in Section II of this report. These blinds are especially advantageous in pumping manifolds or other places requiring frequent changing. They also result in a minimal loss of hydrocarbons. The additional cost can be recovered in the re-

duced need for mechanics to change conventional blinds. Operators already on duty can rapidly change this type of blind.

5. Sampling

Efficient sample coolers will reduce sampling losses at the unit site. Proper disposal facilities will reduce sampling losses in the lab.

SECTION V. SUMMARY

The values which PES has calculated for the emissions from the HREC refinery are based upon the use of the best available control technology. Several of these control efficiencies require the operation of equipment at conditions that may not be possible in actual application at this refinery. Other values may require expensive adaptation of new techniques to existing equipment and may prove financially unrealistic. PES feels that an appropriate final statement for this report is a summation of these sources and other emission estimates which may result.

A. BEAVON-STRETFORD TAIL-GAS CLEANUP SYSTEM

It is difficult to predict the efficiency of a cleanup system without a detailed analysis of the gas stream it must treat. The expected efficiency of the unit will probably range between 99.8 to 99.95 percent. PES used the value of 99.9 percent which is the efficiency claimed by the inventor D.K. Beavon. This corresponds to emissions of 287 tons/year SO_2. The actual emissions from the HREC refinery tail gas system may be as high as 574 tons/year (99.8 percent conversion) or as low as 144 tons/year (99.95 percent conversion efficiency). Another point to consider is that these estimates are sulfur emissions calculated as SO_2. In actuality, most sulfurous emissions from the unit will be as COS and CS_2 and their environmental impact should be judged on this basis.

B. MARINE TERMINAL

The emissions which PES predicted for the marine terminal may prove to be lower than the actual. It is impossible to judge until the actual vessels HREC plans on using are studied. PES

has stated that the best technique for crude oil unloading from tankers is the use of a ship equipped with a segregated ballast and combustion gas inerting. In the course of a study PES performed to determine the impact of importing Alaskan crude oil through Long Beach, California, the consensus of industrial sources contacted was that no 80,000 DWT tanker was currently equipped with combustion gas inerting capabilities. It is possible to convert a ship to inerting but it is an expensive operation. If HREC uses 80,000 DWT tankers without inerting systems, the hydrocarbon losses from venting will cause an increase in refinery emissions of 56 tons/year (see Table 19). If HREC chooses to install inerting systems, the tanker has the capability of purging, which has a large hydrocarbon emission potential. The practice of a 50 percent purge of each tanker hold while in port would contribute approximately 535 tons/year to the atmosphere.

The value of 89.0 tons/year of hydrocarbons from the barge terminal vapor recovery system assumes that all barges loaded will be able to be connected to vapor return lines. If 10 percent of the barges loading each product are not able to utilize the vapor recovery system, the emissions could increase to 178.0 tons/year if no other measures are utilized such as "short" loading. The value of 89.0 tons/year also assumes that each barge will be "clean" before arriving at the refinery. This practice results in the lowest emissions from the refinery grounds. This is not the lowest overall emission value possible with the cleaning operation. Barges are cleaned (washed of contaminants) enroute between points to minimize time in port. This is the most economical method of operation. However, cleaning enroute means that the hydrocarbons generated during the process escape uncontrolled. If barges were required to clean at the HREC terminal, they could utilize the vapor recovery system. This would cause an increase in HREC emissions of 72.3 tons/year. However, traded off against this in-port emission increase would be the

elimination of approximately 700 tons/year of hydrocarbons emitted during cleaning at sea. An important factor to be considered in this argument is that longer residence time at the terminal will require the operation of a larger number of barges.

C. NITROGEN OXIDES FROM PROCESS HEATERS

PES is convinced that the two-stage combustion process is not currently applicable to a process heater. A form of NO_x control is available if the process heater is equipped with multiple burners. By careful study of each heater's characteristics, it may prove possible to utilize the off-stoichiometric combustion process to reduce NO_x formation. With this in mind, HREC should be encouraged to purchase multiple burner units wherever possible. A 25 percent reduction in the formation of NO_x from process heaters would reduce NO_2 emissions by over 1000 tons/year.

BIBLIOGRAPHY

1. A Program to Investigate Various Factors in Refinery Siting. Radian Corporation, Austin, Texas. Prepared for the Environmental Protection Agency, Washington, D.C. February 15, 1974.

2. A Study of Vapor Control Methods for Gasoline Marketing Operations, Volume I - Industry Survey and Control Techniques. Final Report. Radian Corporation, Austin, Texas. Prepared for the Environmental Protection Agency, Research Triangle Park, North Carolina, under Contract Number EPA 68-02-1319. April 1975.

3. Air Pollution Engineering Manual, Second Edition. Publication Number AP-40. May 1973

4. Air Quality Analysis of the Unloading of Alaskan Crude Oil at California Ports. Pacific Environmental Services, Inc., Santa Monica, California. Prepared for the U.S. Environmental Protection Agency, Office of Air Quality Planning and Standards, Research Traingle Park, North Carolina under Contract Number EPA 68-02-1405. July 1976.

5. Beavon, David. Add-On Process Slashes Claus Tailgas Pollution. Chemical Engineering, p. 71-73, December 13, 1971.

6. Cheremisinoff, Paul N. et. al. Sludge Handling and Disposal: A Special Report. Pollution Engineering, p. 22-23, January 1976.

7. Compilation of Air Pollutant Emission Factors, Second Edition. Publication Number AP-42. February 1976.

8. Crude Tanker Pollution Abatement. A Position Paper by Exxon Corporation, April 1976.

9. Emissions of Oxides of Nitrogen from Stationary Sources in Los Angeles County, Report No. 2. A Joint District, Federal, State and Industry Project. September 1960.

10. Evaporation Loss from Fixed-Roof Tanks. API Bulletin 2518. June 1962.

11. Evaporation Loss from Floating-Roof Tanks. API Bulletin 2517. February 1962.

12. Field Surveillance and Enforcement Guide for Petroleum Refineries. The Ben Holt Co., Pasadena, California. Prepared for U.S. Environmental Protection Agency, Office of Air and Waste Management, Research Triangle Park, North Carolina, under Contract Number EPA 68-02-0645.

13. Inspection Manual for the Enforcement of New Source Performance Standards: Sewage Sludge Incinerators. PEDCo-Environmental Specialists, Inc., Cincinnati, Ohio. Prepared for U.S. Environmental Protection Agency, Division of Stationary Source Enforcement, Washington, D.C. under Contract Number EPA 68-02-1073. January 1975.

14. Mallatt, R. C., J. F. Grutsch and H. E. Simons. Incinerator Sludge and Caustic. Hydrocarbon Processing, p. 121-122, May 1970.

15. 1974 Refining Processes Handbook. Reprinted from the September 1974 issue of Hydrocarbon Processing. Copyright 1974 by Gulf Publishing Company, Houston, Texas.

16. Nitrogen Oxide Abatement Technology in Japan - 1973. Processes Research, Inc., Cincinnati, Ohio. Prepared for U.S. Environmental Protection Agency, Office of Research and Monitoring, Washington, D.C. under Contract Number EPA 68-02-0242. June 1973.

17. Pielkenroad Corrugated Plate Separator Packs. Informational literature distributed by the Pielkenroad Separator Company, Houston, Texas.

18. Plant Energy Systems. By the editors of Power. McGraw-Hill Book Company 1967.

19. Revision of Evaporative Hydrocarbon Emission Factors. Radian Corporation, Austin, Texas. Prepared for the U.S. Environmental Protection Agency, Office of Air Quality Planning and Standards, Research Triangle Park, North Carolina. June 15, 1976.

20. Samuelson, G. Scott. The Combustion Aspects of Air Pollution. Advances in Environmental Science and Technology. Edited by J. N. Pitts and R. L. Metcalf. John Wiley and Sons, Inc. Publishers - Volume 5, p. 219-323, Copyright 1975.

21. Siddiqi, Aziz A., Larry D. Killion, John W. Tenini and James T. Adams, Jr. Tests Quantify Emissions from Ship Loadings. Reprinted from Hydrocarbon Processing, April 1976.

ACKNOWLEDGEMENT

A large number of people provided the authors a great deal of guidance, technical assistance and constructive criticism. The authors would like to express their gratitude to these individuals, without whom this report would not have been possible.

DAVID MARKWORDT - U.S. Environmental Protection Agency, Research Triangle Park, North Carolina
JOHN HOWELL - U. S. Environmental Protection Agency, Region III, Philadelphia, Pennsylvania
RICHARD KEPPLER - U.S. Environmental Protection Agency, Region I, Boston, Massachusetts
RICHARD E. RAYFORD - Foster Wheeler Energy Corporation, Livingston, New Jersey
ANDREW A. KUTLER - Foster Wheeler Energy Corporation, Livingston, New Jersey
FRANK ISAACSON - Foster Wheeler Energy Corporation, Livingston, New Jersey
ROBERT E. PORTERFIELD - Hampton Roads Energy Company, Portsmouth, Virginia
J.W. DAILY - Standard Oil Company of California, Western Operations, Inc., El Segundo, California
L.R. RAY - Standard Oil Company of California, Wester Operations, Inc., El Segundo, California
HARRY CHATFIELD - South Coast Air Pollution Control District, Los Angeles, California
ROBERT MURRAY - South Coast Air Pollution Control District, Los Angeles, California

GENERAL ASSUMPTIONS

All combustion units were assumed to operate at maximum rated capacity of heat input. All combustion units were also assumed to burn a combination of 17.13 percent refinery fuel gas and 82.87 percent #5 fuel oil simultaneously. At this point of the design, Foster Wheeler is not certain which units, if any, will utilize a larger portion of the fuel gas.

The refinery was assumed to operate 24 hours a day, 347 days per year. This value was determined by the following calculation:

2,682,742,000 gallons/year of crude throughput
(Foster Wheeler submittal to Virginia Air Board)

$$\frac{(2{,}682{,}742{,}000 \text{ gallons/year})}{(42 \text{ gallons/barrel})(184{,}000 \text{ barrels/stream day})} =$$

347 stream days/year

All through the appendices reference will be made to emission factors from the "Radian report." This reference corresponds to the report titled: Revision of Evaporative Hydrocarbon Emission Factors, draft of final report, prepared by Radian Corporation for EPA Office of Air Quality Planning and Standards, dated June 15, 1976.

APPENDIX 1

CALCULATIONS AND ASSUMPTIONS USED TO DETERMINE THE EMISSIONS FROM THE CRUDE DISTILLATION UNIT

CRUDE HEATER

455×10^6 BTU/hour rate capacity

$(455 \times 10^6 \text{ BTU/hour})(0.8287) = 377 \times 10^6$ BTU/hour for oil

$$\frac{(377 \times 10^6 \text{ BTU/hour for oil})}{(132{,}755 \text{ BTU/gallon})} = 2840 \text{ gallons/hour}$$

$(455 \times 10^6 \text{ BTU/hour})(0.1713) = 78 \times 10^6$ BTU/hour for refinery gas

$$\frac{(78 \times 10^6 \text{ BTU/hour for refinery gas})}{(930 \text{ BTU/cubic foot})} = 0.0839 \times 10^6 \text{ cubic feet/hour}$$

Particulate Emissions

For oil: $(377 \times 10^6 \text{ BTU/hour})(0.074 \text{ pounds}/10^6 \text{ BTU})^* = 27.90$ pounds/hour

For gas: use emission factor of 20 pounds/10^6 cubic feet (AP-42, page 9.1-3)

$(20 \text{ pounds}/10^6 \text{ cubic feet})(0.0839 \times 10^6 \text{ cubic feet/hour}) = 1.68$ pounds/hour

$$\frac{[(27.90 + 1.68) \text{ pounds/hour}](24 \text{ hours/day})(347 \text{ days/year})}{(2000 \text{ pounds/ton})} =$$

123.17 tons/year

Sulfur Dioxide Emissions

For oil: sulfur content of #5 fuel oil is 0.3 percent by weight

(2840 gallons/hour)(7.586 pounds/gallon)(0.003) = 64.63 pounds/hour of sulfur

Assuming complete oxidation of sulfur to SO_2:

64.63 pounds/ hour of sulfur compounds to 129.26 pounds/ hour of SO_2

$$\frac{(129.26 \text{ pounds/hour of } SO_2)(24 \text{ hours/day})(347 \text{ days/year})}{(2000 \text{ pounds/ton})} =$$

538.24 tons of SO_2/year

*Derived by PES on pages 99-100.

For gas: Amount of fuel gas = 83,900 SCFH
= (83,900 SCF/hour)(0.0514 pounds/SCF)
= 4312.46 pounds/hour

Amount of sulfur in fuel gas
= (4312.46 pounds/hour) $\frac{0.025}{100}$ weight percent*
= 1.08 pounds/hour

1.08 pounds/hour of sulfur correspond to 2.16 pounds/hour SO_2

therefore, SO_2 emission =

$$\frac{(2.16 \text{ pounds/hour})(24 \text{ hours/day})(347 \text{ days/year})}{(2000 \text{ pounds/ton})} =$$

8.98 tons/year

Total SO_2 emissions = 538.24 + 8.98 = 547.22 tons/year

Nitrogen Oxides (NO_2)

1. Based on Radian emission factors (same as AP-42, page 9.1-3)

For oil: (69 pounds/10^3 gallons burned)(2.840 x 10^3 gallons/hour) = 195.96 pounds/hour

For gas: 230 pounds/10^6 cubic feet of gas burned (same as AP-42, page 9.1-3)

(230 pounds/10^6 cubic feet)(0.0839 x 10^6 cubic feet/hour) = 19.30 pounds/hour

$$\frac{[(195.96 + 19.30 \text{ pounds/hour}](24 \text{ hours/day})(347 \text{ days/year})}{(2000 \text{ pounds/ton})} =$$

896.34 tons/year

*Foster Wheeler value submitted to the Commonwealth of Virginia.

2. AP-40 values - values for heat inputs of oil and gas are taken directly from the following graph:

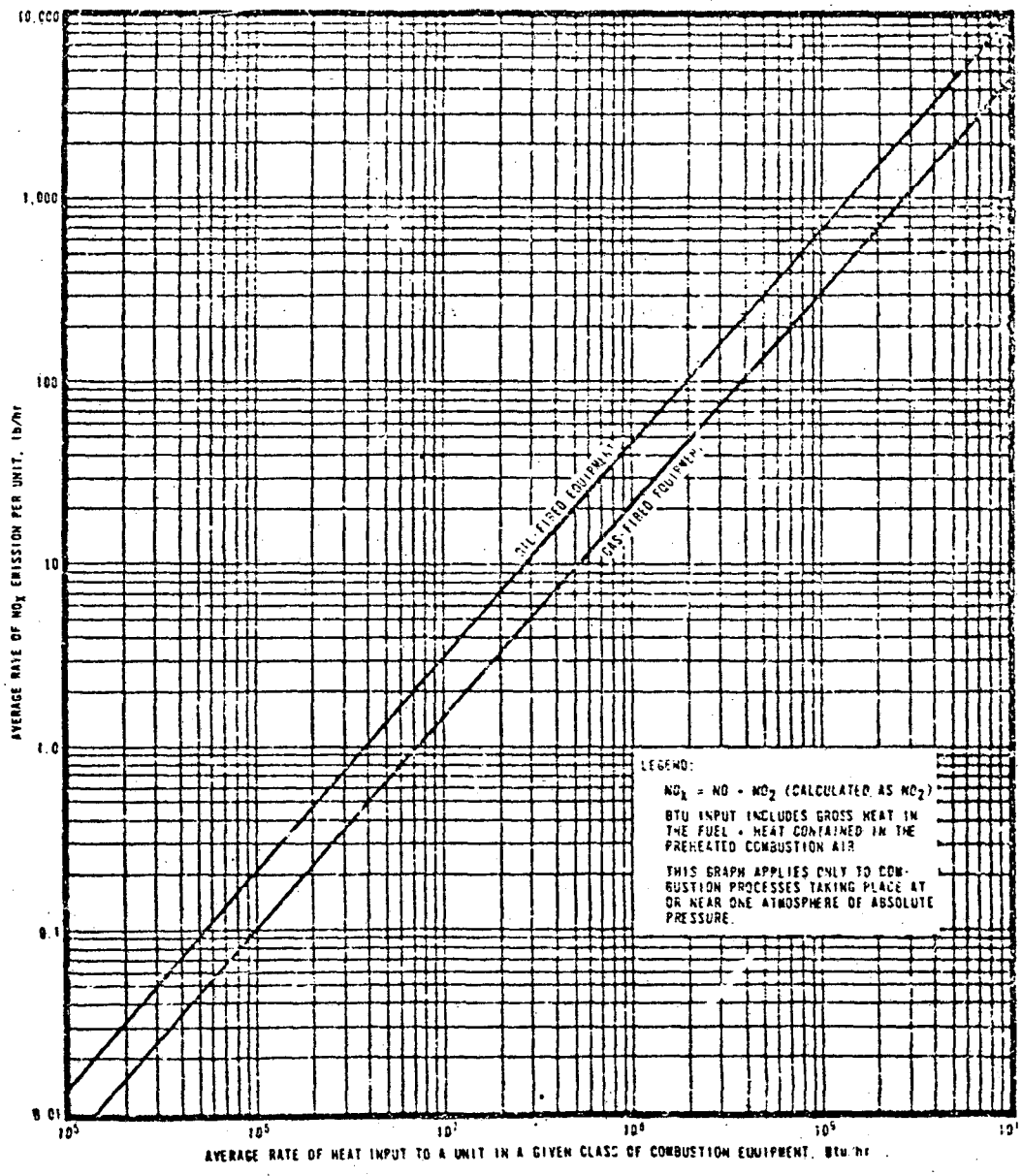

For oil: the value for 377×10^6 BTU/hour heat input is 210 pounds/hour

For gas: the value for 78×10^6 BTU/hour heat input is 16 pounds/hour

$$\frac{[(210 + 16) \text{ pounds/hour}](24 \text{ hours/day})(347 \text{ days/year})}{(2000 \text{ pounds/ton})} = \underline{\underline{941.1 \text{ tons/year}}}$$

Hydrocarbon Emissions

For oil: use emission factor from AP-42, page 9.1-3
140 pounds/10^3 barrels burned - 3.33 pounds/10^3 gallons burned

(3.33 pounds/10^3 gallons burned)(2.84 x 10^3 gallons/hour) = 9.5 pounds/hour

For gas: use emission factor from AP-42, page 9.1-3
30 pounds/10^6 cubic feet

(30 pounds/10^6 cubic feet)(0.0839 x 10^6 cubic feet/hour) = 2.52 pounds/hour

$$\frac{[(9.5 + 2.52) \text{ pounds/hour}](24 \text{ hours/day})(347 \text{ days/year})}{(2000 \text{ pounds/ton})} = \underline{\underline{50.05 \text{ tons/year}}}$$

Uncontrolled Emissions

Used emission factor of 11 pounds/10^3 barrels of refinery capacity (both Radian and AP-42)

$$\frac{(11 \text{ pounds}/10^3 \text{ barrels of refinery capacity})}{(11 \text{ units/refinery})} = 1.0 \text{ pounds}/10^3 \text{ barrels per unit}$$

(1.00 pounds/10^3 barrels)(184 x 10^3 barrels/day) = 184.00 pounds/day

$$\frac{(184.00 \text{ pounds/day})(347 \text{ days/year})}{(2000 \text{ pounds/ton})} = \underline{\underline{31.92 \text{ tons/year}}}$$

Controlled Emissions

All relief valves from the crude distillation unit will vent to the flare system. Therefore, the emissions will be essentially zero.

CONTROL VALVES AND FLANGES

Due to the quality of the information available, it was not possible to accurately assess the number of flanges and vlaves the unit will have. Since emissions are a function of housekeeping, inspection and maintenance schedules, procedures which cannot be quantified, it was decided to present the worst possible case and have uncontrolled and controlled emissions the same.

Emission factor used was 28 pounds/10^3 barrels refinery capacity from Radian and AP-42

$$\frac{(28 \text{ pounds}/10^3 \text{ barrels of refinery capacity})}{(11 \text{ units/refinery})} = 2.55 \text{ pounds}/10^3 \text{ barrels per unit}$$

$$(2.55 \text{ pounds}/10^3 \text{ barrels})(184 \times 10^3 \text{ barrels/day}) = 469.2 \text{ pounds/day}$$

$$\frac{(469.2 \text{ pounds/day})(347 \text{ days/year})}{(2000 \text{ pounds/ton})} = \underline{\underline{81.4 \text{ tons/year}}}$$

BLIND CHANGING

Uncontrolled Emissions

Use emission factor of 0.3 pounds/10^3 barrels refinery capacity (Radian report).

$$\frac{(0.3 \text{ pounds}/10^3 \text{ barrels of refinery capacity})}{(11 \text{ units/refinery})} = 0.027 \text{ pounds}/10^3 \text{ barrels per unit}$$

$$(0.027 \text{ pounds}/10^3 \text{ barrels unit capacity})(184 \times 10^3 \text{ barrels/day}) = 4.97 \text{ pounds/day}$$

$$\frac{(4.97 \text{ pounds/day})(347 \text{ days/year})}{(2000 \text{ pounds/ton})} = \underline{\underline{0.86 \text{ tons/year}}}$$

Controlled Emissions

Good refinery procedures such as line flushing, use of "line" blinds and blind insulation with gate valves will reduce emissions to a negligible quantity.

SAMPLING

Uncontrolled Emissions

Use emission factor of 2.3 pounds/10^3 barrels refinery capacity (Radian report).

$$\frac{(2.3 \text{ pounds}/10^3 \text{ barrels of refinery capacity})}{(11 \text{ units refinery})} = 0.209 \text{ pounds}/10^3 \text{ barrels per unit}$$

(0.209 pounds/10^3 barrels of unit capcity)(184 x 10^3 barrels/day) = 38.46 pounds/day

$$\frac{(38.46 \text{ pounds/day})(347 \text{ days/year})}{(2000 \text{ pounds/ton})} = \underline{\underline{6.67 \text{ tons/year}}}$$

Controlled Emissions

Good refinery practices such as avoidance of excessive sample purging and flushing sample purge to the sump will reduce emissions to a negligible quantity.

PUMPS AND COMPRESSORS

Controlled Emissions

The following table lists all pumps and compressors planned for crude unit. Column one notes the planned service for each piece of equipment. Column two shows the reid vapor pressure of each material. Some of these values were provided by Foster Wheeler. Other estimates were made based upon the API gravity of the noted stream. Still others, such as reflux, are the best guess. Column three shows an estimation of emissions based upon the vapor presure (source: AP-40, page 686).

$$\frac{(15.6 \text{ pounds/day})(347 \text{ days/year})}{(2000 \text{ pounds/ton})} = \underline{\underline{2.71 \text{ tons/year}}}$$

Uncontrolled Emissions

Used the emission factors* of: 5 pounds/day for each pump seal
9 pounds/day for each compressor seal

The crude unit operates 14 pumps in hydrocarbon usuage, each with one seal. The unit also operates one compressor in hydrocarbon service with one seal.

*Supplied by the Radian report.

CRUDE UNIT PUMPS AND COMPRESSORS

UNIT AND SERVICE	REID VAPOR PRESSURE	POUNDS/DAY
Crude feed to desalter	3.5	0.3
Crude feed to heater	3.5	0.3
Residuum	0.007	0.0
Residuum spare*	0.007	0.0
Heavy gas oil	0.02	0.0
Light gas oil	1.75	0.3
Kerosene	1.75	0.3
Heavy naphtha	1.75	0.3
Reflux drum to collector	5.2	2.7
Condensed overheads to stabilizer	7.0	2.7
Gasoline to storage	7.0	2.7
Stabilizer reflux	7.0	2.7
Intermediate reflux	1.75	0.3
Bottoms reflux	1.75	0.3
Overhead non-condensible compressor	20.0	2.7
Three water service pumps	0	0.0
TOTAL		15.6

*The residuum spare is included because this pump is in service at all times. This pump must remain heated to operating temperature at all times so that if it should take over service, the residuum will not stick, a problem which could occur if the pump were cold.

(5 pounds/day-seal)(14 seals/unit) = 70 pounds/day for pumps

(9 pounds/day-seal)(1 seal/unit) = 9 pounds/day for compressor

$$\frac{[(70 + 9) \text{ pounds/day}](347 \text{ days/year})}{(2000 \text{ pounds/ton})} \quad \underline{\underline{13.7 \text{ tons/year}}}$$

APPENDIX 2

CALCULATIONS AND ASSUMPTIONS USED TO DETERMINE THE EMISSIONS FROM THE HYDROGEN PLANT

HYDROGEN HEATER

688×10^6 BTU/hour rated capacity

$(688 \times 10^6 \text{ BTU/hour})(0.8287) = 570 \times 10^6$ BTU/hour for oil

$$\frac{(570 \times 10^6 \text{ BTU/hour})}{(132{,}753 \text{ BTU/gallon})} = \underline{4294 \text{ gallons/hour of oil}}$$

$(688 \times 10^6 \text{ BTU/hour})(0.1713) = 118 \times 10^6$ BTU/hour for refinery gas

$$\frac{(118 \times 10^6 \text{ BTU/hour})}{(930 \text{ BTU/cubic foot})} = \underline{0.127 \times 10^6 \text{ cubic feet/hour}}$$

Particulate Emissions

For oil: $(570 \times 10^6 \text{ BTU/hour})(0.074 \text{ pounds}/10^6 \text{ BTU})^* =$
42.18 pounds/hour

For gas: use emission factor of 20 pounds/10^6 cubic feet
$(20 \text{ pounds}/10^6 \text{ cubic feet})(0.127 \times 10^6 \text{ cubic feet/hour}) =$
2.54 pounds/hour

$$\frac{[(42.18 + 2.54) \text{ pounds/hour}](24 \text{ hours/day})(347 \text{ days/year})}{(2000 \text{ pounds/ton})} =$$

186.21 tons/year

Sulfur Dioxide Emissions

For oil: sulfur content of #5 fuel oil is 0.3 percent by weight

(4294 gallons/hour)(7.586 pounds/gallon)(0.003) =
97.72 pounds/hour of sulfur

97.72 pounds/hour of sulfur corresponds to 195.44 pounds/hour of SO_2

$$\frac{(195.44 \text{ pounds/hour of } SO_2)(24 \text{ hours/day})(347 \text{ days/year})}{(2000 \text{ pounds/ton})} =$$

813.81 tons/year

For gas: Amount of sulfur gas = 127,000 SCF/hour
= (127,000 SCF/hour)(.0514 pounds/SCF)
= 6527.8 pounds/hour

*Derived by PES on pages 99-100.

Amount of sulfur in fuel gas

$$= (6527.8 \text{ pounds/hour})(0.025/100)^{*}$$
$$= \quad \text{pounds/hour}$$

pounds/hour of sulfur correspond to 3.26 pounds/hour SO_2

therefore, SO_2 emission =

$$\frac{(3.26 \text{ pounds/hour})(24 \text{ hours/day})(347 \text{ days/year})}{(2000 \text{ pounds/ton})} = 13.57 \text{ tons/year}$$

Total SO_2 emission = 813.81 + 13.57 = 827.38 tons/year

Nitrogen Oxides (NO_2)

1. Based on Radian emission factors

For oil: (69 pounds/10^3 gallons burned)(4.294 x 10^3 gallons/hour) = 296.29 pounds/hour

For gas: (230 pounds/10^6 cubic feet)(0.127 x 10^6 cubic feet/hour) = 29.21 pounds/hour

$$\frac{[(296.29 + 29.21) \text{ pounds/hour}](24 \text{ hours/day})(347 \text{ days/year})}{(2000 \text{ pounds/ton})} =$$

1355.38 tons/year

2. Based on AP-40 values from the chart in Section A-1

For oil: the value for 570 x 10^6 BTU/hour heat input is 330 pounds/hour

For gas: the value for 118 x 10^6 BTU/hour heat input is 22 pounds/hour

$$\frac{[(330 + 22) \text{ pounds/hour}](24 \text{ hours/day})(347 \text{ days/year})}{(2000 \text{ pounds/ton})} = 1465.73 \text{ tons/year}$$

Hydrocarbon Emissions

For oil: use emission factor of 3.33 pounds/10^3 gallons burned

(3.33 pounds/10^3 gallons burned)(4.294 x 10^3 gallons/hour) = 14.3 pounds/hour

*Weight percent estimated by Foster Wheeler.

For gas: use emission factor of 30 pounds/10^6 cubic feet burned

(30 pounds/10^6 cubic feet)(0.127 x 10^6 cubic feet/hour) = 3.81 pounds/hour

$$\frac{[(14.3+3.81)\text{ pounds/hour}](24\text{ hours/day})(347\text{ days/year})}{(2000\text{ pounds/ton})} = 75.41\text{ tons/year}$$

RELIEF VALVES

Uncontrolled Emissions

Use emission factor developed in Appendix 1 of 1.0 pounds/10^3 barrels per unit.

(1.0 pounds/10^3 barrels)(184 x 10^3 barrels/day) = 184.0 pounds/day

$$\frac{(184.0\text{ pounds/day})(347\text{ days/year})}{(2000\text{ pounds/ton})} = \underline{31.92\text{ tons/year}}$$

Controlled Emissions

All relief valves from the hydrogen plant will be routed to the flare system. Therefore, the emissions will be essentially zero.

PUMPS AND COMPRESSORS

The hydrogen plant anticipates having only one compressor servicing hydrocarbon gas (methane). All pumps will be in non-hydrocarbon service and are not mentioned. All emissions of hydrogen and methane from seals will be vented to the flare so the actual emissions will be essentially zero.

Emissions from the one compressor seal have a potential of 9 pounds/day for each seal.

(9 pounds/day-seal)(1 seal/unit) = 9 pounds/day for the unit

$$\frac{(9\text{ pounds/day})(347\text{ days/year})}{(2000\text{ pounds/ton})} = \underline{1.56\text{ tons/year}}$$

BLIND CHANGING

Uncontrolled Emissions

Use emission factor 0.027 pounds/unit from Appendix 1.

$$\frac{(0.027 \text{ pounds}/10^3 \text{ barrels per unit})(184 \times 10^3 \text{ barrels/day})(347 \text{ days/year})}{(2000 \text{ pounds/ton})}$$

0.86 tons/year

Controlled Emissions

Good refinery procedures such as line flushing, use of "line" and blind insulation with gate valves will reduce emissions to a negligible quantity.

CONTROL VALVES AND FLANGES

Controlled and uncontrolled emissions are the same (see Appendix 1). Use the emission factor of 2.55 pounds/10^3 barrels per unit.

$$\frac{(2.55 \text{ pounds}/10^3 \text{ barrels})(184 \times 10^3 \text{ barrels/day})(347 \text{ days/year})}{(2000 \text{ pounds/ton})} =$$

81.41 tons/year

SAMPLING

Uncontrolled Emissions

Use emission factor of 0.209 pounds/10^3 barrels

$$\frac{(0.209 \text{ pounds}/10^3 \text{ barrels})(184 \times 10^3 \text{ barrels/day})(347 \text{ days/year})}{(2000 \text{ pounds/ton})} =$$

6.67 tons/year

Controlled Emissions

Good refinery practices such as avoidance of excessive sample purging and flushing sample purge to the sump will reduce emissions to a negligible quantity

APPENDIX 3

CALCULATIONS AND ASSUMPTIONS USED TO DETERMINE THE EMISSIONS FROM THE NAPHTHA HYDRODESULFURIZER

NAPHTHA HDS HEATER

233×10^6 BTU/hour rated capacity

$(233 \times 10^6 \text{ BTU/hour})\ (0.3287) = 193 \times 10^6$ BTU/hour for oil

$$\frac{(193 \times 10^6 \text{ BTU/hour})}{(132{,}755 \text{ BTU/gallon})} = \underline{1454 \text{ gallons/hour of oil}}$$

$(233 \times 10^6 \text{ BTU/hour})\ (0.1713) = 40 \times 10^6$ BTU/hour for refinery gas

$$\frac{(40 \times 10^6 \text{ BTU/hour})}{(930 \text{ BTU/cubic foot})} = \underline{0.043 \times 10^6 \text{ cubic feet/hour}}$$

Particulate Emissions

For oil: $(193 \times 10^6 \text{ BTU/hour})\ (0.074 \text{ pounds}/10^6 \text{ BTU})^* = 14.28$ pounds/hour

For gas: $(20 \text{ pounds}/10^6 \text{ cubic feet})\ (0.043 \times 10^6 \text{ cubic feet/hour}) =$ 0.86 pounds/hour

$$\frac{[(14.28 + 0.86) \text{ pounds/hour}](24 \text{ hours/day})\ (347 \text{ days/year})}{(2000 \text{ pounds/ton})} =$$

63.04 tons/year

Sulfur Dioxide Emissions

For oil: sulfur content of #5 fuel oil is 0.3 percent by weight

(1454 gallons/hour of oil)(7.586 pounds/gallon)(0.003) = 33.09 pounds/hour of sulfur

33.09 pounds/hour of sulfur corresponds to 66.18 pounds/hour of SO_2 (assuming complete oxidation of sulfur to SO_2)

$$\frac{(66.18 \text{ pounds/hour of } SO_2)(24 \text{ hours/day})(347 \text{ days/year})}{(2000 \text{ pounds/ton})} =$$

275.57 tons/year

For gas: Amount of sulfur = 43,000 SCF/hour x 0.0514 pounds/SCF x (0.025/100)**
= 0.55 pounds/hour

0.55 pounds/hour sulfur correspond to 1.1 pounds/hour SO_2

*Derived by PES on pages 99-100.
**Weight percent estimated by Foster Wheeler.

SO_2 emission =

$$\frac{(1.1 \text{ pounds/hour})(24 \text{ hours/day})(347 \text{ days/year})}{(2000 \text{ pounds/ton})} = 4.6 \text{ tons/year}$$

Total SO_2 emission = 275.57 + 4.6 = 280.17 tons/year

Nitrogen Oxides (NO_2)

1. Based on Radian emission factors

For oil: (69 pounds/10^3 gallons burned)(1.459 x 10^3 gallons/hour) = 100.67 pounds/hour

For gas: (230 pounds/10^6 cubic feet)(0.043 x 10^6 cubic feet/hour) = 9.89 pounds/hour

$$\frac{[(100.67 + 9.89) \text{ pounds/hour}](24 \text{ hours/day})(347 \text{ days/year})}{(2000 \text{ pounds/ton})} = \underline{\underline{460.37 \text{ tons/year}}}$$

2. Based on AP-40 values from the chart in Section A-1

For oil: the value for 193 x 10^6 BTU/hour heat input is 100 pounds/hour

For gas: the value for 40 x 10^6 BTU/hour heat input is 7.2 pounds/hour

$$\frac{[(100 + 7.2) \text{ pounds/hour}](24 \text{ hours/day})(347 \text{ days/year})}{(2000 \text{ pounds/ton})} =$$

$\underline{\underline{446.38 \text{ tons/year}}}$

Hydrocarbon Emissions

For oil: (3.33 pounds/10^3 gallons burned) (1.454 gallons/hour) = 4.84 pounds/hour

For gas: (30 pounds/10^6 cubic feet) (0.043 x 10^6 cubic feet/hour) = 1.29 pounds/hour

$$\frac{[(4.84 + 1.29) \text{ pounds/hour}](24 \text{ hours/day})(347 \text{ days/year})}{(2000 \text{ pounds/ton})} =$$

$\underline{\underline{25.53 \text{ tons/year}}}$

RELIEF VALVES

Uncontrolled Emissions

Use emission factor developed in Appendix 1 of 1.0 pounds/10^3 barrels per unit.

$$\frac{(1.0 \text{ pounds}/10^3 \text{ barrels})(184 \times 10^3 \text{ barrels/day})(347 \text{ days/year})}{(2000 \text{ pounds/ton})} =$$

31.92 tons/year

Controlled Emissions

It is assumed that all relief valves from the naphtha hydrodesulfurizer will vent to the flare system. Therefore, the emissions will be essentially zero.

CONTROL VALVES AND FLANGES

Controlled and uncontrolled emissions are the same (Appendix 1).

$$\frac{(2.55 \text{ pounds}/10^3 \text{ barrels})(184 \times 10^3 \text{ barrels/day})(347 \text{ days/year})}{(2000 \text{ pounds/ton})} =$$

81.41 tons/year

BLIND CHANGING

Uncontrolled Emissions

$$\frac{(0.027 \text{ pounds}/10^3 \text{ barrels})(184 \times 10^3 \text{ barrels/day})(347 \text{ days/year})}{(2000 \text{ pounds/ton})} =$$

0.86 tons/year

Controlled Emissions

Good refinery procedures such as line flushing, use of "line" blinds, and blind insulation with gate valves will reduce emissions to a negligible quantity.

SAMPLING

Uncontrolled Emissions

$$\frac{(0.209 \text{ pounds}/10^3 \text{ barrels})(184 \times 10^3 \text{ barrels/day})(347 \text{ days/year})}{(2000 \text{ pounds/ton})} =$$

6.67 tons/year

Controlled Emissions

Good refinery practices such as avoidance of excessive sampling purging and flushing sample purge to the sump will reduce emissions to a negligible quantity.

PUMPS AND COMPRESSORS

Controlled Emissions

For explanation of the following table, see Section A-1.

NAPHTHA HYDRODESULFURIZER PUMPS AND COMPRESSORS

UNIT AND SERVICE	REID VAPOR PRESSURE	POUNDS/DAY
Charge Pump	10	2.7
Bottoms Pump	7	2.7
Overheads Pump	26	11.1
Recycle & Make-Up Compressors (2)*	Unknown	
TOTAL		16.5

*Two compressors consist of two units, each with 60% capacity. In normal operation, both would be in service at reduced load. Gases consist of methane (3%) and hydrogen (97%). For the purpose of this report have considered it to be only hydrogen.

$$\frac{(16.5 \text{ pounds/day})\ (347 \text{ days/year})}{(2000 \text{ pounds/ton})} = \underline{\underline{2.86 \text{ tons/year}}}$$

Uncontrolled Emissions

Use the emission factor of 5 pounds/day for each pump seal except the overheads pump which is considered to be 11.1 pounds/hour

(5 pounds/day-seal) (2 seals) = 10 pounds/day

(11.1 pounds/day-seal) (1 seal) = 11.1 pounds/day

$$\frac{[(10 + 11.1)\ \text{pounds/day}](347\ \text{days/year})}{(2000\ \text{pounds/ton})} = \underline{\underline{3.66\ \text{tons/year}}}$$

Since the compressors handle hydrogen, the hydrocarbon potential is zero.

APPENDIX 4

CALCULATIONS AND ASSUMPTIONS USED TO DETERMINE THE EMISSIONS FROM THE DISTILLATE HYDRODESULFURIZER

DISTILLATE HDS HEATER

116×10^6 BTU/hour rated capacity

$(116 \times 10^6 \text{ BTU/hour})(0.8287) = 96 \times 10^6$ BTU/hour for oil

$$\frac{(96 \times 10^6 \text{ BTU/hour})}{(132{,}755 \text{ BTU/gallon})} = \underline{723 \text{ gallons/hour of oil}}$$

$(116 \times 10^6 \text{ BTU/hour})(0.1713) = 20 \times 10^6$ BTU/hour for refinery gas

$$\frac{(20 \times 10^6 \text{ BTU/hour})}{(930 \text{ BTU/cubic foot})} = \underline{0.0215 \times 10^6 \text{ cubic feet/hour}}$$

Particulate Emissions

For oil: $(96 \times 10^6 \text{ BTU/hour})(0.074 \text{ pounds}/10^6 \text{ BTU})^* = 7.10$ pounds/hour

For gas: $(20 \text{ pounds}/10^6 \text{ cubic feet})(0.0215 \times 10^6 \text{ cubic feet/hour}) =$ 0.43 pounds/hour

$$\frac{[(7.10 + 0.43) \text{ pounds/hour}](24 \text{ hours/day})(347 \text{ days/year})}{(2000 \text{ pounds/ton})} = \underline{\underline{31.35 \text{ tons/year}}}$$

Sulfur Dioxide Emissions

For oil: sulfur content of #5 fuel oil is 0.3 percent by weight

(723 gallons/hour)(7.586 pounds/gallon)(0.003) = 16.45 pounds/hour

16.45 pounds/hour of sulfur corresponds to 32.90 pounds/hour of SO_2

$$\frac{(32.90 \text{ pounds of } SO_2\text{/hour})(24 \text{ hours/day})(347 \text{ days/year})}{(2000 \text{ pounds/ton})} =$$

$\underline{\underline{137.00 \text{ tons/year}}}$

For gas: Amount of sulfur = (21,500 SCF/hour)(0.0514 pounds/SCF)(0.025/100)** = 0.28 pounds/hour

0.28 pounds/hour of sulfur correspond to 0.55 pounds/hour SO_2

*Derived by PES on pages 99-100.
**Weight percent estimated by Foster Wheeler.

SO_2 emission =

$$\frac{(0.55 \text{ pounds/hour})(24 \text{ hours/day})(347 \text{ days/year})}{(2000 \text{ pounds/ton})} = 2.3 \text{ tons/year}$$

Total SO_2 emission = 137.00 + 2.3 = 139.3 tons/year

Nitrogen Oxides (NO_2)

1. Based on Radian emission factors.

For oil: (69 pounds/10^3 gallons burned)(0.723 x 10^3 gallons/hour) = 49.89 pounds/hour

For gas: (230 pounds/10^6 cubic feet)(0.0215 x 10^6 cubic feet/hour) = 4.95 pounds/hour

$$\frac{[(49.89 + 4.95) \text{ pounds/hour}](24 \text{ hours/day})(347 \text{ days/year})}{(2000 \text{ pounds/ton})} =$$

228.35 tons/year

2. Based on AP-40 values for the chart in Section A-1.

For oil: the value for 96 x 10^6 BTU/hour heat input is 43 pounds/hour

For gas: the value for 20 x 10^6 BTU/hour heat input is 3.1 pounds/hour

$$\frac{[(43 + 3.1) \text{ pounds/hour}](24 \text{ hours/day})(347 \text{ days/year})}{(2000 \text{ pounds/ton})} = 191.96 \text{ tons/year}$$

Hydrocarbon Emissions

For oil: (3.33 pounds/10^3 gallons burned)(0.723 x 10^3 gallons/hour) = 2.41 pounds/hour

For gas: (30 pounds/10^6 cubic feet)(0.0215 x 10^6 cubic feet/hour) = 0.65 pounds/hour

$$\frac{[(2.41 + 0.65) \text{ pounds/hour}](24 \text{ hours/day})(347 \text{ days/year})}{(2000 \text{ pounds/ton})} = 12.74 \text{ tons/year}$$

RELIEF VALVES

Uncontrolled Emissions

$$\frac{(1.0 \text{ pounds}/10^3 \text{ barrels})(184 \times 10^3 \text{ barrels/day})(347 \text{ days/year})}{(2000 \text{ pounds/ton})} =$$

31.92 tons/year

Controlled Emissions

All relief valves from the distillate hydrodesulfurizer will be equipped with a rupture disk or vent to the flare system. In either case, the emissions will be essentially zero.

CONTROL VALVES AND FLANGES

Controlled and uncontrolled emissions are the same (see Appendix 1).

$$\frac{(2.55 \text{ pounds}/10^3 \text{ barrels})(184 \times 10^3 \text{ barrels/day})(347 \text{ days/year})}{(2000 \text{ pounds/ton})} =$$

81.41 tons/year

BLIND CHANGING

Uncontrolled Emissions

$$\frac{(0.027 \text{ pounds}/10^3 \text{ barrels})(184 \times 10^3 \text{ barrels/day})(347 \text{ days/year})}{(2000 \text{ pounds/ton})} =$$

0.86 tons/year

Controlled Emissions

Good refinery procedures such as line flushing, use of "line" blinds, and blind insulation with gate valves will reduce emission to a negligible quantity

SAMPLING

Uncontrolled Emissions

$$\frac{(0.209 \text{ pounds}/10^3 \text{ barrels})(184 \times 10^3 \text{ barrels/day})(347 \text{ days/year})}{(2000 \text{ pounds/ton})}$$

6.67 tons/year

Controlled Emissions

Good refinery practices such as avoidance of excessive sampling, purging and flushing sample purge to the sump will reduce emissions to a negligible quantity.

PUMPS AND COMPRESSORS

Controlled Emissions

For a general explanation of the table on page A-4.6, see Section A-1.

The distillate HDS unit is a block process handling each of the three materials separately. From the refinery block diagram, the following average throughputs are known:

Naphtha	-	21,578 BPCD
Kerosene	-	17,535 BPCD
Gas Oil	-	17,745 BPCD
		56,858 BPCD

Each of the materials are handled the following percentage of the time:

Naphtha - 38%
Kerosene - 30.8%
Gas Oil - 31.2%

For naphtha service, the emission total will be:

$$\frac{(10.8 \text{ pounds/day})(347 \text{ days/year})(0.38)}{(2000 \text{ pounds/ton})} = \underline{\underline{0.71 \text{ tons/year}}}$$

For kerosene service, the emission total will be:

$$\frac{(1.2 \text{ pounds/day})(347 \text{ days/year})(0.308)}{(2000 \text{ pounds/ton})} = \underline{\underline{0.06 \text{ tons/year}}}$$

For gas oil service, the emission total will be zero

Uncontrolled Emissions

Use the emission factor of 5 pounds/day for each pump seal.

(5 pounds/day-seal)(4 seals) = 20 pounds/day

DISTILLATE HYDRODESULFURIZER PUMPS AND COMPRESSORS

UNIT AND SERVICE	REID VAPOR PRESSURE			POUNDS/DAY		
	Naphtha	Kerosene	Gas Oil	Naphtha	Kerosene	Gas Oil
Charge Pump	5.2	1.75	0.07	2.7	0.3	0
Naphtha Circulation Pump	5.2	1.75	0.07	2.7	0.3	0
Stripper Boltems Pump	5.2	1.75	0.07	2.7	0.3	0
Stripper Reflux Pump	5.2	1.75	0.07	2.7	0.3	0
Recycle & Make-up Compressors (2)*	Unknown	Unknown	Unknown	0.0	0.0	0

*The compressors consist of two separate units, each with 60 percent capacity. In normal operation, both would be at reduced load. Gases consist of methane (3 percent) and hydrogen (97 percent). For the purpose of this report, have considered the compressors to handle only hydrogen.

$$\frac{(20 \text{ pounds/day})(347 \text{ days/year})}{(2000 \text{ pounds/ton})} = \underline{\underline{3.47 \text{ tons/year}}}$$

Since the compressors handle hydrogen, the hydrocarbon potential is zero.

APPENDIX 5

CALCULATIONS AND ASSUMPTIONS USED TO DETERMINE THE EMISSIONS FROM THE RESIDUUM HYDRODESULFURIZER

RESIDUAL HDS HEATER

286×10^6 BTU/hour rated capacity

$(286 \times 10^6 \text{ BTU/hour})(0.8287) = 237 \times 10^6$ BTU/hour for oil

$$\frac{(237 \times 10^6 \text{ BTU/hour})}{(132{,}755 \text{ BTU/gallon})} = \underline{1785 \text{ gallons/hour of oil}}$$

$(286 \times 10^6 \text{ BTU/hour})(0.1713) = 49 \times 10^6$ BTU/hour for refinery gas

$$\frac{(49 \times 10^6 \text{ BTU/hour})}{(930 \text{ BTU/cubic foot})} = 0.0527 \times 10^6 \text{ cubic feet/hour}$$

Particulate Emissions

For oil: $(237 \times 10^6 \text{ BTU/hour})(0.074 \text{ pounds}/10^6 \text{ BTU})^* = 17.54$ pounds/hour

For gas: $(20 \text{ pounds}/10^6 \text{ cubic feet})(0.0527 \times 10^6 \text{ cubic feet/hour}) =$ 1.05 pounds/hour

$$\frac{[(17.54 + 1.05) \text{ pounds/hour}](24 \text{ hours/day})(347 \text{ days/year})}{(2000 \text{ pounds/ton})} =$$

77.41 tons/year

Sulfur Dioxide Emissions

For oil: sulfur content of #5 fuel oil is 0.3 percent by weight

(1785 gallons/hour)(7.586 pounds/gallons)(0.003) = 40.62 pounds/hour

40.62 pounds/hour of sulfur corresponds to 81.24 pounds of SO_2

$$\frac{(81.24 \text{ pounds of } SO_2\text{/hour})(24 \text{ hours/day})(347 \text{ days/year})}{(2000 \text{ pounds/ton})} =$$

338.28 tons/year

For gas: Amount of sulfur = (52,700 SCF/hour)(0.0514 pounds/SCF)(0.025/100)**
= 0.68 pounds/hour

0.68 pounds/hour sulfur correspond to 1.35 pounds/hour SO_2

*Derived by PES on pages 99-100.
**Weight percent estimated by Foster Wheeler.

SO_2 emission =

$$\frac{(1.35 \text{ pounds/hour})(24 \text{ hours/day})(347 \text{ days/year})}{(2000 \text{ pounds/ton})} =$$

5.64 tons/year

Total SO_2 emission = 338.28 + 5.64 = 343.92 tons/year

Nitrogen Oxides (NO_2)

1. Based on Radian emission factors.

For oil: (69 pounds/10^3 gallons burned)(1.785 gallons/hour) = 123.17 pounds/hour

For gas: (230 pounds/10^6 cubic feet)(0.0527 x 10^6 cubic feet/hour) = 12.12 pounds/hour

$$\frac{[(123.17 + 12.12) \text{ pounds/hour}](24 \text{ hours/day})(347 \text{ days/year})}{(2000 \text{ pounds/ton})} =$$

563.35 tons/year

2. Based on AP-40 values for the chart in Section A-1.

For oil: the value of 237 x 10^6 BTU/hour heat input is 130 pounds/hour

For gas: the value of 49 x 10^6 BTU/hour heat input is 9.3 pounds/hour

$$\frac{[(130 + 9.3) \text{ pounds/hour}](24 \text{ hours/day})(347 \text{ days/year})}{(2000 \text{ pounds/ton})} =$$

580.05 tons/year

Hydrocarbon Emissions

For oil: (3.33 pounds/10^3 gallons burned)(1.785 x 10^3 gallons/hour) = 5.94 pounds/hour

For gas: (30 pounds/10^6 cubic feet)(0.0527 x 10^6 cubic feet/hour) = 1.58 pounds/hour

$$\frac{[(5.94 + 1.58) \text{ pounds/hour}](24 \text{ hours/day})(347 \text{ days/year})}{(2000 \text{ pounds/ton})} = 31.31 \text{ tons/year}$$

RELIEF VALVES

Uncontrolled Emissions

$$\frac{(1.00 \text{ pounds}/10^3 \text{ barrels})(184 \times 10^3 \text{ barrels/day})(347 \text{ days/year})}{(2000 \text{ pounds/ton})} =$$

31.92 tons/year

Controlled Emissions

All relief valves from the residual hydrodesulfurizer will be equipped with a rupture disk or vent to the flare system. In either case, the emissions will be essentially zero.

CONTROL VALVES AND FLANGES

Controlled and uncontrolled emissions are the same (see Appendix 1).

$$\frac{(2.55 \text{ pounds}/10^3 \text{ barrels})(184 \times 10^3 \text{ barrels/day})(347 \text{ days/year})}{(2000 \text{ pounds/ton})} =$$

81.41 tons/year

BLIND CHANGING

Uncontrolled Emissions

$$\frac{(0.027 \text{ pounds}/10^3 \text{ barrels})(184 \times 10^3 \text{ barrels/day})(347 \text{ days/year})}{(2000 \text{ pounds/ton})} =$$

0.86 tons/year

Controlled Emissions

Good refinery procedures such as line flushing use of "line" blinds and blind insulation with gate vlaves will reduce emissions to a negligible quantity.

SAMPLING

Uncontrolled Emissions

$$\frac{(0.209 \text{ pounds}/10^3 \text{ barrels})(184 \times 10^3 \text{ barrels/day})(347 \text{ days/year})}{(2000 \text{ pounds/ton})} =$$

6.67 tons/year

Controlled Emissions

Good refinery practices such as avoidance of excessive sampling purging and flushing sample purge to the sump will reduce emissions to a negligible quantity.

PUMPS AND COMPRESSORS

Controlled Emissions

For explanation of the following table, see Section A-1.

RESIDUAL HYDRODESULFURIZER PUMPS AND COMPRESSORS

UNITS AND SERVICE	REID VAPOR PRESSURE	POUNDS/DAY
Residuum Pump from distillation	0.007	0.0
Residuum Feed Pump #1	0.007	0.0
Residuum Feed Pump # 2	0.007	0.0
Residuum Feed Pump #3	0.007	0.0
Wild Naphtha Pump #1	10.0	2.7
Train #1 Residuum Pump	0.007	0.0
Train #2 Residuum Pump	0.007	0.0
Train #3 Residuum Pump	0.007	0.0
Wild Naphtha Pump #2	10.0	2.7
Wild Naphtha Pump #3	10.0	2.7
Fractionator Bottoms (Residuum Pump)	0.007	0.0
#5 Fuel Oil Pump	0.0085	0.0
Fractionator Overhead Pump	1.75	0.3
Multi-Stage Reciprocating Make-up Compressor #1*	Unknown	0.0
Multi-Stage Reciprocating Make-up Compressor #2*	Unknown	0.0
Single-Stage Centrifugal Recycle Compressor*	Unknown	0.0
Two-Stage Reciprocating Low Pressure Recycle Compressor*	Unknown	0.0
TOTAL		8.7

*Each of the compressors will handle 97 percent hydrogen and 3 percent methane. As a result, the hydrocarbon emissions from these units are considered to be negligible.

$$\frac{(8.7 \text{ pounds/day})(347 \text{ days/year})}{(2000 \text{ pounds/ton})} = \underline{\underline{1.51 \text{ tons/year}}}$$

Uncontrolled Emissions

Use the emission factor of 5 pounds/day for each pump seal. No estimate is made for compressor emissions. Since the material handled is primarily hydrogen, there is no hydrocarbon potential.

$$\frac{(5 \text{ pounds/day - seal})(13 \text{ seals})(347 \text{ days/year})}{(2000 \text{ pounds/ton})} = \underline{\underline{11.3 \text{ tons/year}}}$$

APPENDIX 6

CALCULATIONS AND ASSUMPTIONS USED TO DETERMINE THE EMISSIONS FROM THE DEBUTANIZER (STABILIZER)

RELIEF VALVES

Uncontrolled Emissions

$$\frac{(1.00 \text{ pounds}/10^3 \text{ barrels})(184 \times 10^3 \text{ barrels/day})(347 \text{ days/year})}{(2000 \text{ pounds/ton})} =$$

31.92 tons/year

Controlled Emissions

All relief valves from the debutanizer will be equipped with a rupture disk or vent to the flare system. In either case, the emissions will be essentially zero.

CONTROL VALVES AND FLANGES

Controlled and uncontrolled emissions are the same (see Appendix 1).

$$\frac{(2.55 \text{ pounds}/10^3 \text{ barrels})(184 \times 10^3 \text{ barrels/day})(347 \text{ days/year})}{(2000 \text{ pounds/ton})} =$$

81.41 tons/year

BLIND CHANGING

Uncontrolled Emissions

$$\frac{(0.027 \text{ pounds}/10^3 \text{ barrels})(184 \times 10^3 \text{ barrels/day})(347 \text{ days/year})}{(2000 \text{ pounds/ton})} =$$

0.86 tons/year

Controlled Emissions

Good refinery procedures such as line flushing use of "line blinds," and blind insulation with gate valves will reduce emissions to a negligible quantity.

SAMPLING

Uncontrolled Emissions

$$\frac{(0.209 \text{ pounds}/10^3 \text{ barrels})(184 \times 10^3 \text{ barrels/day})(347 \text{ days/year})}{(2000 \text{ pounds/ton})} =$$

6.67 tons/year

Controlled Emissions

Good refinery practices such as avoidance of excessive sampling purging and flushing sample purge to the sump will reduce emissions to a negligible quantity.

REFLUX PUMP

Uncontrolled Emissions

(5 pounds/day - seal)(1 seal) = 5 pounds/day

$$\frac{(5 \text{ pounds/day})(347 \text{ days/year})}{(2000 \text{ pounds/ton})} = \underline{\underline{0.87 \text{ tons/year}}}$$

Controlled Emissions

Assume the reflex to have a Reid vapor pressure of 6.

This value corresponds to an emission factor of 2.7 pounds/day (see Appendix 1).

$$\frac{(2.7 \text{ pounds/day})(347 \text{ days/year})}{(2000 \text{ pounds/ton})} = \underline{\underline{0.47 \text{ tons/year}}}$$

APPENDIX 7

CALCULATIONS AND ASSUMPTIONS USED TO DETERMINE THE EMISSIONS FROM THE NAPHTHA SPLITTER

RELIEF VALVES

Uncontrolled Emissions

$$\frac{(1.00 \text{ pounds}/10^3 \text{ barrels})(184 \times 10^3 \text{ barrels/day})(347 \text{ days/year})}{(2000 \text{ pounds/ton})} =$$

31.92 tons/year

Controlled Emissions

All relief valves from the naphtha splitter will be equipped with a rupture disk or vent to the flare system. In either case, the emissions will be essentially zero.

CONTROL VALVES AND FLANGES

Controlled and uncontrolled emissions are the same (see Appendix 1).

$$\frac{(2.55 \text{ pounds}/10^3 \text{ barrels})(184 \times 10^3 \text{ barrels/day})(347 \text{ days/year})}{(2000 \text{ pounds/ton})} =$$

81.41 tons/year

BLIND CHANGING

Uncontrolled Emissions

$$\frac{(0.027 \text{ pounds}/10^3 \text{ barrels})(184 \times 10^3 \text{ barrels/day})(347 \text{ days/year})}{(2000 \text{ pounds/ton})} =$$

0.86 tons/year

Controlled Emissions

Good refinery procedures such as line flushing, use of "line" blinds, and blind insulation with gate valves will reduce emissions to a negligible quantity.

SAMPLING

Uncontrolled Emissions

$$\frac{(0.209 \text{ pounds}/10^3 \text{ barrels})(184 \times 10^3 \text{ barrels/day})(347 \text{ days/year})}{(2000 \text{ pounds/ton})} =$$

6.67 tons/year

REFLUX PUMP

Uncontrolled Emissions

(5 pounds/day - seal)(1 seal) = 5 pounds/day

$$\frac{(5 \text{ pounds/day})(347 \text{ days/year})}{(2000 \text{ pounds/day})} = \underline{0.87 \text{ tons/year}}$$

Controlled Emissions

Assume the reflux being pumped to have a Reid vapor pressure of 6. This value corresponds to an emission factor of 2.7 pounds/day (see Appendix 1).

$$\frac{(2.7 \text{ pounds/day})(347 \text{ days/year})}{(2000 \text{ pounds/ton})} = \underline{0.47 \text{ tons/year}}$$

APPENDIX 8

CALCULATIONS AND ASSUMPTIONS USED TO DETERMINE THE EMISSIONS FROM THE CATALYTIC REFORMING UNIT

CATALYTIC REFORMER HEATERS

470×10^6 BTU/hour rated capacity

$(470 \times 10^6 \text{ BTU/hour})(0.8287) = 389 \times 10^6$ BTU/hour for oil

$$\frac{(389 \times 10^6 \text{ BTU/hour})}{(132{,}755 \text{ BTU/gallon})} = \underline{2930 \text{ gallons/ hour of oil}}$$

$(470 \times 10^6 \text{ BTU/hour})(0.1713) = 81 \times 10^6$ BTU/hour for refinery gas

$$\frac{(81 \times 10^6 \text{ BTU/hour})}{(930 \text{ BTU/cubic foot})} = \underline{0.0871 \times 10^6 \text{ cubic feet/hour}}$$

Particulate Emissions

For oil: $(389 \times 10^6 \text{ BTU/hour})(0.074 \text{ pounds}/10^6 \text{ BTU})^* = 28.79$ pounds/hour

For gas: $(20 \text{ pounds}/10^6 \text{ cubic feet})(0.0871 \times 10^6 \text{ cubic feet/year}) =$ 1.74 pounds/hour

$$\frac{[(28.79 + 1.74)\text{pounds/hour}](24 \text{ hours/day})(347 \text{ days/year})}{(2000 \text{ pounds/ton})} = \underline{\underline{127.13 \text{ tons/year}}}$$

Sulfide Emissions

For oil: sulfur content of #5 fuel oil is 0.3 percent by weight

(2930 gallons of oil/hour)(7.586 pounds/gallon)(0.003) = 66.68 pounds/hour of sulfur

66.68 pounds/hour of sulfur corresponds to 133.36 pounds/hour of SO_2

$$\frac{(133.36 \text{ pounds/hour of } SO_2)(24 \text{ hours/day})(347 \text{ days/year})}{(2000 \text{ pounds/ton})} =$$

$\underline{\underline{555.31 \text{ tons/year}}}$

For gas: Amount of sulfur = (87,100 SCF/hour)(0.0514 pounds/SCF)(0.025/100)**
= 1.12 pounds/hour

1.12 pounds/hour of sulfur correspond to 2.24 pounds/hour SO_2

*Derived by PES on pages 99-100.
**Weight percent estimated by Foster Wheeler.

SO_2 emission =

$$\frac{(2.24 \text{ pounds/hour})(24 \text{ hours/day})(347 \text{ days/year})}{(2000 \text{ pounds/ton})} = 9.32 \text{ tons/year}$$

Total SO_2 emission = 555.31 + 9.32 = 564.63 tons/year

Nitrogen Oxides (NO_2)

1. Based on Radian emission factors.

For oil: (69 pounds/10^3 gallons burned)(2.930 x 10^3 gallons/hour) = 202.17

For gas: (230 pounds/10^6 cubic feet)(0.0871 x 10^6 cubic feet/hour) = 20.03 pounds/hour

$$\frac{[(202.17 + 20.03) \text{ pounds/hour}](24 \text{ hours/day})(347 \text{ days/year})}{(2000 \text{ pounds/ton})} =$$

925.24 tons/year

2. Based on AP-40 values from the chart in Section A-1.

For oil. the value for 389 x 10^6 BTU/hour heat input is 215 pounds/hour

For gas: the value for 81 x 10^6 BTU/hour heat input is 16 pounds/hour

$$\frac{[(215 + 16) \text{ pounds/hour}](24 \text{ hours/day})(347 \text{ days/year})}{(2000 \text{ pounds/ton})} = 961.88 \text{ tons/year}$$

Hydrocarbon Emissions

For oil: (3.33 pounds/10^3 gallons burned)(2.930 x 10^3 gallons/hour) = 9.76 pounds/hour

For gas: (30 pounds/10^6 cubic feet)(0.0871 x 10^6 cubic feet/hour) = 2.61 pounds/hour

$$\frac{[(9.76 + 2.61) \text{ pounds/hour}](24 \text{ hours/day})(347 \text{ days/year})}{(2000 \text{ pounds/ton})} = 51.52 \text{ tons/year}$$

RELIEF VALVES

Uncontrolled Emissions

$$\frac{(1.00 \text{ pounds}/10^3 \text{ barrels})(184 \times 10^3 \text{ barrels/day})(347 \text{ days/year})}{(2000 \text{ pounds/ton})} =$$

31.92 tons/year

Controlled Emissions

All relief valves from the catalytic reformer will probably vent to the flare system. Therefore, the emissions will be essentially zero.

CONTROL VALVES AND FLANGES

Controlled and uncontrolled emissions are the same (sse Appendix 1).

$$\frac{(2.55 \text{ pounds}/10^3 \text{ barrels})(184 \times 10^3 \text{ barrels/day})(347 \text{ days/year})}{(2000 \text{ pounds/ton})} =$$

81.41 tons/year

BLIND CHANGING

Uncontrolled Emissions

$$\frac{(0.027 \text{ pounds}/10^3 \text{ barrels})(184 \times 10^3 \text{ barrels/day})(347 \text{ days/year})}{(2000 \text{ pounds/ton})} =$$

0.86 tons/year

Controlled Emissions

Good refinery procedures such as line flushing, use of "line" blinds, and blind insulation with gate valves will reduce emissions to a negligible quantity.

SAMPLING

Uncontrolled Emissions

$$\frac{(0.209 \text{ pounds}/10^3 \text{ barrels})(184 \times 10^3 \text{ barrels/day})(347 \text{ days/year})}{(2000 \text{ pounds/ton})} =$$

6.67 tons/year

Controlled Emissions

Good refinery practices such as avoidance of excessive sampling purging and flushing sample purge to the sump will reduce emissions to a negligible quantity.

PUMPS AND COMPRESSORS

Controlled Emissions

For an explanation of the following table, see Section A-1.

CATALYTIC REFORMER PUMPS

UNIT AND SERVICE	REID VAPOR PRESSURE	POUNDS/DAY
Charge Pump	5.2	2.7
Separator Liquid Pump	5.2	2.7
TOTAL		5.4

$$\frac{(5.4 \text{ pounds/day})(347 \text{ days/year})}{(2000 \text{ pounds/ton})} = 0.94 \text{ tons/year}$$

Uncontrolled Emissions

(5 pounds/day-seal)(2 seals) = 10 pounds/day

$$\frac{(10 \text{ pounds/day})(347 \text{ days/year})}{(2000 \text{ pounds/ton})} = \underline{\underline{1.74 \text{ tons/year}}}$$

APPENDIX 9

CALCULATIONS AND ASSUMPTIONS USED TO DETERMINE THE EMISSIONS FROM THE DEPENTANIZER

RELIEF VALVES

Uncontrolled Emissions

$$\frac{(1.00 \text{ pounds}/10^3 \text{ barrels})(184 \times 10^3 \text{ barrels/day})(347 \text{ days/year})}{(2000 \text{ pounds/ton})} =$$

31.92 tons/year

Controlled Emissions

All relief valves from the depentanizer will be equipped with a rupture disk or vent to the flare system. In either case, the emissions will be essentially zero.

CONTROL VALVES AND FLANGES

Controlled and uncontrolled emissions are the same (see Appendix 1).

$$\frac{(2.55 \text{ pounds}/10^3 \text{ barrels})(184 \times 10^3 \text{ barrels/day})(347 \text{ days/year})}{(2000 \text{ pounds/ton})} =$$

81.41 tons/year

BLIND CHANGING

Uncontrolled Emissions

$$\frac{(0.027 \text{ pounds}/10^3 \text{ barrels})(184 \times 10^3 \text{ barrels/day})(347 \text{ days/year})}{(2000 \text{ pounds/ton})} =$$

≤ 86 tons/year

Controlled Emissions

Good refinery procedures such as line flushing, use of "line" blinds, and blind insulation with gate valves will reduce emissions to a negligible quantity.

SAMPLING

Uncontrolled Emissions

$$\frac{(0.209 \text{ pounds}/10^3 \text{ barrels})(184 \times 10^3 \text{ barrels/day})(347 \text{ days/year})}{(2000 \text{ pounds/ton})} =$$

6.67 tons/year

Controlled Emissions

Good refinery practices such as avoidance of excessive sampling purging and flushing sample purge to the sump will reduce emissions to a negligible quantity.

PUMPS

Controlled Emissions

For an explanation of the following table, see Section A-1.

DEPENTANIZER PUMPS

UNIT AND SERVICE	REID VAPOR PRESSURE	POUNDS/DAY
Overheads pump	7.0	2.7
Bottoms pump	5.2	2.7
TOTAL		5.4

$$\frac{(5.4 \text{ pounds/day})(347 \text{ days/year})}{(2000 \text{ pounds/ton})} = \underline{\underline{0.94 \text{ tons/year}}}$$

Uncontrolled Emissions

(5 pounds/day seal)(2 seals) = 10 pounds/day

$$\frac{(10 \text{ pounds/day})(347 \text{ days/year})}{(2000 \text{ pounds/ton})} = \underline{\underline{1.74 \text{ tons/year}}}$$

APPENDIX 10

CALCULATIONS AND ASSUMPTIONS USED TO DETERMINE THE EMISSIONS FROM THE ISOMERIZER UNIT

ISOMERIZER HEATER

81×10^6 BTU/hour rated capacity

$(81 \times 10^6 \text{ BTU/hour})\ (0.8287) = 67 \times 10^6$ BTU/hour for oil

$$\frac{(67 \times 10^6 \text{ BTU/hour})}{(132.755 \text{ BTU/gallon})} = 505 \text{ gallons/hour of oil}$$

$(81 \times 10^6 \text{ BTU/hour})\ (0.1713) = 14 \times 10^6$ BTU/hour for refinery gas

$$\frac{(14 \times 10^6 \text{ BTU/hour})}{(930 \text{ BTU/cubic feet})} = 0.0151 \times 10^6 \text{ cubic feet/hour}$$

Particulate Emissions

For oil: $(67 \times 10^6 \text{ BTU/hour})\ (0.074 \text{ pounds}/10^6 \text{ BTU})^* = 4.96$ pounds/hour

For gas: $(20 \text{ pounds}/10^6 \text{ cubic feet})\ (0.0151 \times 10^6 \text{ cubic feet/year}) =$ 0.30 pounds/hour

$$\frac{[(4.96 + 0.30) \text{ pounds/hour}](24 \text{ hours/day})\ (347 \text{ days/year})}{(2000 \text{ pounds/ton})} = \underline{\underline{21.90 \text{ tons/year}}}$$

Sulfur Dioxide Emissions

For oil: sulfur content of #5 fuel oil is 0.3 percent by weight

(505 gallons/hour) (7.586 pounds/gallon) (0.003) = 11.49 pounds/hour of sulfur

11.49 pounds/hour of sulfur corresponds to 22.58 pounds/hour of SO_2

$$\frac{(22.58 \text{ pounds/hour of } SO_2)\ (24 \text{ hours/day})\ (347 \text{ days/year})}{(2000 \text{ pounds/ton})} =$$

$\underline{\underline{94.02 \text{ tons/year}}}$

For gas: Amount of sulfur = (15,100 SCF/hour) (0.0514 pounds/SCF) $(0.025/100)^{**}$
= 0.19 pounds/hour

0.19 pounds/hour sulfur corresponds to 0.39 pounds/hour SO_2

*Dervied by PES on pages 99-100.
**Weight percent estimated by Foster Wheeler.

SO_2 emission =

$$\frac{(0.39 \text{ pounds/hour})\ (24 \text{ hours/day})\ (347 \text{ days/year})}{(2000 \text{ pounds/ton})} =$$

1.62 tons/year

Total SO_2 emission = 94.02 + 1.62 = 95.64 tons/year

Nitrogen Oxides (NO_2)

1. Based on Radian emission factors

For oil: (69 pounds/10^3 gallons burned) (0.505 gallons/hour) = 34.85 pounds/hour

For gas: (230 pounds/10^6 cubic feet) (0.0151 x 10^6 cubic feet/hour) = 3.47 pounds/hour

$$\frac{[(34.85 + 3.47) \text{ pounds/hour}]\ (24 \text{ hours/day})\ (347 \text{ days/year})}{(2000 \text{ pounds/ton})} =$$

159.56 tons/year

2. Based on AP-40 values from the chart in Section A-1

For oil: the value for 67 x 10^6 BTU/hour heat input is 28 pounds/hour

For gas: the value for 14 x 10^6 BTU/hour heat input is 2.1 pounds/hour

$$\frac{[(28 + 2.1) \text{ pounds/hour}]\ (24 \text{ hours/day})\ (347 \text{ days/year})}{(2000 \text{ pounds/ton})} = 125.34 \text{ tons/year}$$

Hydrocarbon Emissions

For oil: (3.33 pounds/10^3 gallons burned) (0.505 x 10^3 gallons/hour) = 1.68 pounds/hour

For gas: (30 pounds/10^6 cubic feet) (0.0151 x 10^6 cubic feet/hour) = 0.45 pounds/hour

$$\frac{[(1.68 + 0.45) \text{ pounds/hour}]\ (24 \text{ hours/day})\ (347 \text{ days/year})}{(2000 \text{ pounds/ton})} =$$

8.87 tons/year

RELIEF VALVES

Uncontrolled Emissions

$$\frac{(1.00 \text{ pounds}/10^3 \text{ barrels})(184 \times 10^3 \text{ barrels/day})(347 \text{ days/year})}{(2000 \text{ pounds/ton})} =$$

31.92 tons/year

Controlled Emissions

All relief valves from the isomerizer will probably vent to the flare system. Therefore, the emissions will be esentially zero.

CONTROL VALVES AND FLANGES

Controlled and uncontrolled emissions are the same (see Appendix 1).

$$\frac{(2.55 \text{ pounds}/10^3 \text{ barrels})(184 \times 10^3 \text{ barrels/day})(347 \text{ days/year})}{(2000 \text{ pounds/ton})} =$$

81.41 tons/year

BLIND CHANGING

Uncontrolled Emissions

$$\frac{(0.027 \text{ pounds}/10^3 \text{ barrels})(184 \times 10^3 \text{ barrels/day})(347 \text{ days/year})}{(2000 \text{ pounds/ton})} =$$

0.86 tons/year

Controlled Emissions

Good refinery procedures such as line flushing, use of "line" blinds, and blind insulation with gate valves will reduce emissions to a negligible quantity.

SAMPLING

Uncontrolled Emissions

$$\frac{(0.209 \text{ pounds}/10^3 \text{ barrels})(184 \times 10^3 \text{ barrels/day})(347 \text{ days/year})}{(2000 \text{ pounds/ton})} =$$

6.67 tons/year

Controlled Emissions

Good refinery practices such as avoidance of excessive sampling purging and flushing sample purge to the sump will reduce emissions to a negligible quantity.

PUMPS AND COMPRESSORS

Controlled Emissions

For an explanation of the following table, see Section A-1.

ISOMERIZER PUMPS AND COMPRESSORS

UNIT AND SERVICE	REID VAPOR PRESSURE	POUNDS/DAY
Charge Pump	7.0	2.7
Stablizer Overheads Pump	7.0	2.7
Make-Up Compressor*	0.0	0.0
TOTAL		5.4

*This compressor handles hydrogen and is not a source of hydrocarbon emissions. The unit will be a motor driven reciprocating unit.

$$\frac{(5.4 \text{ pounds/day})\ (347 \text{ days/year})}{(2000 \text{ pounds/ton})} = \underline{\underline{0.94 \text{ tons/year}}}$$

Uncontrolled Emissions

Have not included the compressor. Since the unit handles essentially hydrogen only, it does not have hydrocarbon emission potential.

(5 pounds/day-seal) (2 seals) = 10 pounds/day

$$\frac{(10 \text{ pounds/day})\ (347 \text{ days/year})}{(2000 \text{ pounds/ton})} = \underline{\underline{1.74 \text{ tons/year}}}$$

APPENDIX 11

CALCULATIONS AND ASSUMPTIONS USED TO DETERMINE THE EMISSIONS FROM THE LPG PLANT

RELIEF VALVES

Uncontrolled Emissions

$$\frac{(1.00 \text{ pounds}/10^3 \text{ barrels})(184 \times 10^3 \text{ barrels/day})(347 \text{ days/year})}{(2000 \text{ pounds/ton})} =$$

31.92 tons/year

Controlled Emissions

All relief valves from the LPG unit will be equipped with a rupture disk or vent to the flare system. In either case, the emissions will be essentially zero.

CONTROL COCKS AND FLANGES

It is assumed that the cocks involved will emit in the same manner as a valve. Controlled and uncontrolled emissions are the same (see Appendix 1).

$$\frac{(2.55 \text{ pounds}/10^3 \text{ barrels})(184 \times 10^3 \text{ barrels/day})(347 \text{ days/year})}{(2000 \text{ pounds/ton})} =$$

81.41 tons/year

BLIND CHANGING

Due to the use of Hamer blinds, the potential and actual emissions will be negligible.

SAMPLING

Uncontrolled Emissions

$$\frac{(0.209 \text{ pounds}/10^3 \text{ barrels})(184 \times 10^3 \text{ barrels/day})(347 \text{ days/year})}{(2000 \text{ pounds/ton})} =$$

6.67 tons/year

Controlled Emissions

Good refinery practices such as avoidance of excessive sampling purging and flushing sample purge to the sump will reduce emissions to a negligible quantity.

PUMPS AND COMPRESSORS

Controlled Emissions

For expalnation of the following table, see section A-1.

LPG PLANT PUMPS AND COMPRESSORS

UNIT AND SERVICE	REID VAPOR PRESSURE	POUNDS/DAY
Drum level control pump*	26	11.1
Inter-stage drum pump	26	11.1
Aftercooler pump	20	2.7
Absorber bottoms pump	3.5	0.3
Debutanizer overheads pump	26	11.1
Depropanizer overheads pump	26	11.1
Overhead 2-stage antifugal compresson**	26	0.0
TOTAL		47.4

*Pump is an on-off unit, not in continuous service. Impossible to determine amount of service so assumed it to operate continuous.
**Emissions from compresson seals will be vented to the flare.

$$\frac{(47.4 \text{ pounds/day})(347 \text{ days/year})}{(2000 \text{ pounds/ton})} = \underline{\underline{8.22 \text{ tons/year}}}$$

Uncontrolled Emissions

Because the average uncontrolled factor for pump and compressor seals are values lower than actual emission estimates, the actual emission estimates for these units are used.

UNCONTROLLED EMISSIONS

Drum-level control pump	-	11.1	pounds/day
Inter-stage drum pump	-	11.1	pounds/day
After cooler pump	-	5.0	pounds/day
Absorber bottoms pump	-	5.0	pounds/day
Debutanizer overheads pump	-	11.1	pounds/day
Depropanizer overheads pump	-	11.1	pounds/day
Compressor	-	11.1	pounds/day
TOTAL		65.5	pounds/day

$$\frac{(65.5 \text{ pounds/day})(347 \text{ days/year})}{(2000 \text{ pounds/ton})} = \underline{\underline{11.36 \text{ tons/year}}}$$

APPENDIX 12

CALCULATIONS AND ASSUMPTIONS USED TO DETERMINE THE EMISSIONS FROM THE OPTIONAL MEROX UNIT

PUMPS

Controlled Emissions

For an explanation of the following table, see section A-1.

MEROX PUMPS

UNIT AND SERVICE	REID VAPOR PRESSURE	POUNDS/HOUR
Charge Pump	3.5	0.3
Product Pump	3.5	0.3
Total		0.6

$$\frac{(0.6 \text{ pounds/day})(347 \text{ days/year})}{(2000 \text{ pounds/ton})} = \underline{\underline{0.10 \text{ tons/year}}}$$

Uncontrolled Emissions

(5 pounds/day seal)(2 seals) = 10 pounds/day

$$\frac{(10 \text{ pounds/day})(347 \text{ days/year})}{(2000 \text{ pounds/ton})} = \underline{\underline{1.74 \text{ tons/year}}}$$

APPENDIX 13

CALCULATIONS AND ASSUMPTIONS USED TO DETERMINE THE EMISSIONS FROM THE SULFUR PLANT

SULFUR BURNER

45×10^6 BTU/hour rated capacity

$(45 \times 10^6 \text{ BTU/hour})(0.8287) = 37 \times 10^6$ BTU/hour for oil

$$\frac{(37 \times 10^6 \text{ BTU/hour})}{(132{,}755 \text{ BTU/gallon})} = \underline{279 \text{ gallons/hour for oil}}$$

$(45 \times 10^6 \text{ BTU/hour})(0.1713) = 8 \times 10^6$ BTU/hour for refinery gas

$$\frac{(8 \times 10^6 \text{ BTU/hour})}{(930 \text{ BTU/cubic foot})} = \underline{0.0086 \times 10^6 \text{ cubic feet/hour}}$$

Particulate Emissions

For oil: $(37 \times 10^6 \text{ BTU/hour})(0.074 \text{ pounds}/10^6 \text{ BTU})^* = 2.74$ pounds/hour

For gas: $(20 \text{ pounds}/10^6 \text{ cubic feet})(0.0086 \times 10^6 \text{ cubic feet/hour}) =$ 0.17 pounds/hour

$$\frac{[(2.74 + 0.17) \text{ pounds/hour}](24 \text{ hours/day})(347 \text{ days/year})}{(2000 \text{ pounds/ton})} = \underline{\underline{12.12 \text{ tons/year}}}$$

Sulfur Dioxide Emissions

For oil: sulfur content of #5 fuel oil is 0.3 percent by weight

(279 gallons/hour)(7.586 pounds/gallon)(0.003) = 6.35 pounds/hour of sulfur

6.35 pounds/hour of sulfur corresponds to 12.70 pounds/hour of SO_2

$$\frac{(12.70 \text{ pounds/hour of } SO_2)(24 \text{ hours/day})(347 \text{ days/year})}{(2000 \text{ pounds/ton})} =$$

$\underline{\underline{52.88 \text{ tons/year}}}$

For gas: Amount of sulfur = (8,600 SCF/hour)(0.0514 pounds/SCF)(0.025/100)**
= 0.11 pounds/hour

0.11 pounds/hour sulfur correspond to 0.22 pounds/hour SO_2

*Derived by PES on pages 99-100.
**Weight percent estimated by Foster Wheeler.

SO_2 emissions =

$$\frac{(0.22 \text{ pounds/hour})(24 \text{ hours/day})(347 \text{ days/year})}{(2000 \text{ pounds/ton})} =$$

0.92 tons/year

Total SO_2 emission = 52.88 + 0.92 = 53.8 tons/year

Nitrogen Oxides (NO_2)

1. Based on Radian emission factors.

For oil: (69 pounds/10^3 gallons burned)(0.279 x 10^3 gallons/hour) = 19.25 pounds/hour

For gas: (230 pounds/10^6 cubic feet)(0.0086 x 10^6 cubic feet/hour) = 1.98 pounds/hour

$$\frac{[(19.25 + 1.98) \text{ pounds/hour}](24 \text{ hours/day})(347 \text{ days/year})}{(2000 \text{ pounds/ton})} =$$

88.40 tons/year

2. Based on AP-40 values for the chart in Section A-1.

For oil: the value for 37 x 10^6 BTU/hour heat input is 14 pounds/hour

For gas: the value for 8 x 10^6 BTU/hour heat input is 1.1 pounds/hour

$$\frac{[(14 + 1.1) \text{ pounds/hour}](24 \text{ hours/day})(347 \text{ days/year})}{(2000 \text{ pounds/ton})} = 62.88 \text{ tons/year}$$

Hydrocarbon Emissions

For oil: (3.33 pounds/10^3 gallons burned)(0.279 x 10^3 gallons/hour) = 0.93 pounds/hour

For gas: (30 pounds/10^6 cubic feet)(0.0086 x 10^6 cubic feet/hour) 0.26 pounds/hour

$$\frac{[(0.93 + 0.26) \text{ pounds/hour}](24 \text{ hours/day})(347 \text{ days/year})}{(2000 \text{ pounds/ton})} = 4.96 \text{ tons/year}$$

SULFUR PLANT INCINERATOR

Uncontrolled Emissions

1. Based upon material balance from Foster Wheeler. Foster Wheeler estimates that337 long tons of sulfur will be recovered each calendar day. If the conversion efficiency is 96 percent (a reasonable value for a three-stage reactor), then the other 4 percent which is not converted will exit through the stack. This amount could be:

$$\left[\frac{(337 \text{ long tons of sulfur/day})(2240 \text{ pounds/long ton})}{0.96}\right](0.04) =$$

31,453 pounds/day of sulfur

It is assumed that all of the sulfur leaving the tail gas incinerator was as SO_2, then 31,453 pounds of sulfur/day corresponds to 62,906 pounds/day of SO_2.

$$\frac{(62{,}906 \text{ pounds/day of } SO_2)(365 \text{ days/year})}{(2000 \text{ pounds/ton})} = \underline{\underline{11{,}480 \text{ tons/year}}}$$

On initial examination, this appears to be a very high number, so a comparison can be made using the AP-42 emission factor for a 96 percent efficient three-stage conversion process.

2. Using AP-42 emission factor, page 5.18-2 of 167 pounds/ton of sulfur produced.

$$\frac{(167 \text{ pounds/tons of sulfur})(337 \text{ tons of sulfur/calendar day})(365 \text{ days/year})}{(2000 \text{ pounds/ton})}$$

$$\approx \underline{\underline{10{,}271 \text{ tons/year}}}$$

This value confirms the reasonableness of the first number.

Controlled Emissions

Foster Wheeler predicts that emissions from the tail-gas cleanup system will be approximately 200 ppm of sulfur compounds expressed as SO_2. This will include 50 ppm of carbonyl sulfide (COS) and carbon disulfide (CS_2), and 10 ppm of H_2S. These values correspond to predicted results published by David K. Beavron, the designer, in 1971 (Chemical Engineering, December 13, 1971). Since the exit gas flow rate and temperature are unknown, these numbers, in themselves, are inadequate to provide an estimate in terms of tons/year.

Mr. Beavon states that this treatment of a tail-gas incinerator contaminants can result in sulfur control of 99.9 percent. This value corresponds to the published value in AP-42 and is used to estimate controlled emissions.

$$\left[\frac{(337 \text{ long tons of sulfur/day})(2240 \text{ pounds/long ton})}{0.96}\right](0.001) =$$

786.33 pounds/day of sulfur emitted

786.33 pounds/day of sulfur corresponds to 1572.66 pounds/day of SO_2

$$\frac{(1572.66 \text{ pounds/day})(365 \text{ days/year})}{(2000 \text{ pounds/ton})} = \underline{\underline{287.01 \text{ tons/year}}}$$

APPENDIX 14

CALCULATIONS AND ASSUMPTIONS USED TO DETERMINE THE EMISSIONS FROM THE STEAM GENERATING PLANT

STEAM GENERATING BOILERS

490×10^6 BTU/hour rated capcity

$(490 \times 10^6 \text{ BTU/hour})(0.8287) = 406 \times 10^6$ BTU/hour for oil

$$\frac{(406 \times 10^6 \text{ BTU/hour})}{(132{,}755 \text{ BTU/gallon})} = \underline{3058 \text{ gallons/hour of oil}}$$

$(490 \times 10^6 \text{ BTU/hour})(0.1713) = 84 \times 10^6$ BTU/hour for refinery gas

$$\frac{(84 \times 10^6 \text{ BTU/hour})}{(930 \text{ BTU/cubic foot})} = \underline{0.0903 \times 10^6 \text{ cubic feet/hour}}$$

Particulate Emissions

For oil: $(406 \times 10^6 \text{ BTU/hour})(0.074 \text{ pounds}/10^6 \text{ BTU})^* = 30.04$ pounds/hour

For gas: $(20 \text{ pounds}/10^6 \text{ cubic feet})(0.0903 \times 10^6 \text{ cubic feet/year}) =$ 1.81 pounds/hour

$$\frac{[(30.04 + 1.81) \text{ pounds/hour}](24 \text{ hours/day})(347 \text{ days/year})}{(2000 \text{ pounds/ton})} =$$

132.62 tons/year

Sulfur Dioxide Emissions

For oil: sulfur content of #5 fuel oil is 0.3 percent by weight

(3058 gallons/hour)(7.586 pounds/gallon)(0.003) = 69.59 pounds/hour of sulfur

69.59 pounds/hour of sulfur corresponds to 139.18 pounds/hour of SO_2

$$\frac{(139.18 \text{ pounds/hour of } SO_2)(24 \text{ hours/day})(347 \text{ days/year})}{(2000 \text{ pounds/ton})} =$$

579.55 tons/year

For gas: Amount of sulfur = (90,300 SCF/hour)(0.0514 pounds/SCF)(0.025/100)** = 1.16 pounds/hour

*Derived by PES on pages 99-100.
**Weight percent estimated by Foster Wheeler.

1.16 pounds/hour sulfur correspond to 2.32 pounds/hour SO_2

SO_2 emission =

$$\frac{(2.32 \text{ pounds/hour})(24 \text{ hours/day})(347 \text{ days/year})}{(2000 \text{ pounds/ton})} = 9.66 \text{ tons/year}$$

Total SO_2 emission = 579.55 + 9.66 = 589.21 tons/year

Nitrogen Oxides (NO_2)

1. Based on Radian emission factors.

For oil: (69 pounds/10^3 gallons burned)(3.058 x 10^3 gallons/hour) = 211.00 pounds/hour

For gas: (230 pounds/10^6 cubic feet)(0.0903 x 10^6 cubic feet/hour) = 20.77 pounds/hour

$$\frac{[(211.00 + 20.77) \text{ pounds/hour}](24 \text{ hours/day})(347 \text{ days/year})}{(2000 \text{ pounds/ton})} =$$

965.09 tons/year

2. Based on AP-40 values for the chart in Section A-1.

For oil: the value for 406 x 10^6 BTU/hour heat input is 220 pounds/hour

For gas: the value for 84 x 10^6 BTU/hour heat input is 17 pounds/hour

$$\frac{[(220 + 17) \text{ pounds/hour}](24 \text{ hours/day})(347 \text{ days/year})}{(2000 \text{ pounds/ton})} = 986.87 \text{ tons/year}$$

Hydrocarbon Emissions

For oil: (3.33 pounds/10^3 gallons burned)(3.058 x 10^3 gallons/hour) = 10.18 pounds/hour

For gas: (30 pounds/10^6 cubic feet)(0.0903 x 10^6 cubic feet/hour) = 2.71 pounds/hour

$$\frac{[(10.18 + 2.71) \text{ pounds/hour}](24 \text{ hours/day})(347 \text{ days/year})}{(2000 \text{ pounds/ton})} = 53.67 \text{ tons/year}$$

APPENDIX 15

CALCULATIONS AND ASSUMPTIONS USED TO DETERMINE THE EMISSIONS FROM MISCELLANEOUS HREC EQUIPMENT

REFINERY FUEL GAS COMPRESSOR

Uncontrolled Emissions

(11.1 pounds/day-seal) (1 seal) 11.1 pounds/day

Controlled Emissions

Assume the pressure of the primarily methane stream on the seal to be 26 RVP. The emission value which corresponds to this value is 11.1 pounds/hour (see Appendix 1).

$$\frac{(11.1 \text{ pounds/hour})\ (347 \text{ days/year})}{(2000 \text{ pounds/ton})} = 1.93 \text{ tons/year}$$

REFINERY FUEL GAS PUMP

Uncontrolled Emissions

(11.1 pounds/day-seal) (1 seal) = 11.1 pounds/day

$$\frac{(11.1 \text{ pounds/day})\ (347 \text{ days/year})}{(2000 \text{ pounds/ton})} = \underline{\underline{1.93 \text{ tons/year}}}$$

Controlled Emissions

$$\frac{(11.1 \text{ pounds/day})\ (347 \text{ days/year})}{(2000 \text{ pounds/ton})} = \underline{\underline{1.93 \text{ tons/year}}}$$

FUEL OIL PUMP

Uncontrolled Emissions

$$\frac{(5 \text{ pounds/day})\ (347 \text{ days/year})}{(2000 \text{ pounds/day})} = \underline{\underline{0.87 \text{ tons/year}}}$$

Controlled Emissions

The vapor pressure of the product pumped will be 0.008 which will emit negligible hydrocarbons.

7 PRODUCT PUMPS

Uncontrolled Emissions

(5 pounds/day-seal) (7 seals) = 35 pounds/day

$$\frac{(35 \text{ pounds/day})\ (347 \text{ days/year})}{(2000 \text{ pounds/ton})} = 6.07 \text{ tons/year}$$

Controlled Emissions

The seven product pumps are shown below:

UNIT	REID VAPOR PRESSURE	POUNDS/DAY
LPG Pump	26	11.1
Gasoline Pump #1	7	2.7
Gasoline Pump #2	7	2.7
Jet Fuel Pump	1.75	0.3
#2 Fuel Oil Pump	0.07	0.0
#5 Fuel Oil Pump #1	0.008	0.0
#5 Fuel Oil Pump #2	0.008	0.0
TOTAL		16.8

$$\frac{(16.8 \text{ pounds/day})\ (347 \text{ days/year})}{(2000 \text{ pounds/ton})} = \underline{\underline{2.91 \text{ tons/year}}}$$

APPENDIX 16

CALCULATIONS AND ASSUMPTIONS USED TO DETERMINE THE EMISSIONS FROM THE EMERGENCY FLARE SYSTEM

PILOTING

The ground level flare will burn pilot gas at the rate of 3,000 SCFH.

(3000 cubic feet/hour)(24 hours/day)(365 days/year) = 26.28×10^6 cubic feet/year

The elevated flare will burn pilot gas at the rate of 1,200 SCFH.

(1200 cubic feet/hour)(24 hours/day)(365 days/year) = 10.512×10^6 cubic feet/year

Particulates and Hydrocarbon Emissions

Each flare is equipped with steam injection to improve the combustion efficiency. Proper operation will ensure that all hydrocarbons entering the burner will be destroyed. Since the ash content of the fuel gas is negligible, the particulates and hydrocarbon emissions are considered to be insignificant.

Nitrogen Oxides (NO_2)

The emission factor used is 0.014 pounds/10^6 BTU of pilot gas burned from Emissions of Oxides of Nitrogen Stationary Sources in Los Angeles County, Report #2, September 1960.

(36.792×10^6 cubic feet/year)(930 BTU/cubic foot) = 34216.56×10^6 BTU/year

$$\frac{(34216.56 \times 10^6 \text{ BTU/year})(0.014 \text{ pounds}/10^6 \text{ BTU})}{(2000 \text{ pounds/ton})} = 0.24 \text{ tons/year}$$

Sulfur Dioxide Emissions

(36.792×10^6 cubic feet/year)(0.0514 pounds/cubic foot)(0.00025) = 472.78 pounds/year of sulfur which corresponds to 945.56 pounds/year of SO_2.

$$\frac{(945.56 \text{ pounds/year})}{(2000 \text{ pounds/ton})} = \underline{\underline{0.47 \text{ tons/year}}}$$

UPSETS

The investigators could not develop any strategies of their own to calculate the frequencies or duration of upsets associated with startups and shutdowns. Therefore, the estimates shown here are the values predicted by Foster Wheeler.

The amount of time that the ground level flare will operate during routine start-up and shutdown operations is estimated to be approximately 50 hours per year. It must be remembered that during initial shake down and corrective operations occuring during the first year of operation the number of shutdowns and start-ups will be greater than the normal shown here. The total number of times the ground level flare will be in use during normal refinery operations is estimated to be about 30 times per year, the operations varying in length from about one-half hour to about eight hours. The flue gas rate will vary, depending on operation, from less than 40,000 pounds/hour to about one million pounds/hour. The estimated operations and emissions are summarized in the table on the following page. A second table follows showing flare loads from each unit during these periods.

It is impossible to estimate emissions resulting from emergency dumping to the elevated flare. Emissions could be very high for short periods of time. However, these conditions occur very seldom and have not been considered.

[illegible]
Flares

[illegible]

[illegible]

Unit Operation	SO_2	NO_x	Particulate	Hydrocarbons
Distillation-Shut Down	60	15	10	15
Naphtha Hydrodesulfurizer:				
Start Up	80	30	3	4
Depressure	10	13	5	7
Purge	3	4	1	2
Catalyst Regeneration	-	20	2	3
	93	67	11	16
Distillate Hydrodesulfurizer:				
Start Up	4,000	420	18	27
Depressure	165	100	8	12
Purge	45	30	3	4
Catalyst Regeneration	-	20	1	2
	4,210	570	30	45
Residuum Hydrodesulfurizer:				
Start Up	61,400	1,940	80	120
Depressure	480	170	12	18
Purge	140	50	4	6
Catalyst Regeneration	532	100	8	12
	62,552	2,160	104	156
Debutanizer-Shut Down	-	10	7	10
Naphtha Splitter-Shut Down	-	8	6	10
Catalytic Reformer:				
Start Up	-	72	6	10
Depressure	-	22	2	3
Purge	-	6	1	2
Catalyst Regeneration	-	7	1	1
	-	107	10	16
Depentanizer-Shut Down	-	15	12	18
Isomerizer:				
Start Up	-	67	4	6
Depressure	-	26	3	5
Purge	-	8	1	2
Catalyst Regeneration	-	14	2	3
		115	10	16
LPG Plant:				
Depressure	2,123	10	8	12
Purge	530	3	2	3
	2,653	13	10	15

Reproduced from best available copy.

[illegible]	[illegible]	[illegible]	[illegible]	[illegible]
Hydro [illegible] Units:				
Start Up	-	[illegible]	[illegible]	7[illegible]
Shut Down	-	[illegible]	[illegible]	[illegible]
	-	[illegible]	9[illegible]	1[illegible]
Yearly Totals:				
Pounds	[illegible]	3,9[illegible]0	3[illegible]	4[illegible]
Tons	35	2	0.15	0.23

Reproduced from best available copy.

HAMPTON ROADS
Flare

FLARE LOADS

Unit and Operation	Frequency No/Year	Duration Hours	Pollutant Flow Rate, Pounds/Hour SO_2	NO_x	Particulate	Hydrocarbon	Flow Rate ACFH	Density LB/FT³	Temp. °F	Vel. Ft./Sec.
Distillation:										
Shut Down	1/2	1	120	30	20	30	49,32[illegible],600	0.0[illegible]06	1,[illegible]	44
Naphtha HDS:										
Start Up	1/2	2	80	30	3	4	4,375,600	0.0[illegible]5	1,[illegible]10	4.4
Depressure	1/2	1	20	26	10	14	8,659,500	0.0[illegible]7	[illegible]	7.7
Purge	1/2	1/2	10	16	2	5	3,35[illegible],200	[illegible]	[illegible]	7.4
Cat. Regen.	1	1	-	20	2	3	4,815,600	[illegible]	[illegible]	4.3
Distillate HDS:										
Start Up	1	3	1,334	140	6	9	25,076,200	0.01[illegible]	[illegible]	22
Depressure	1	2	83	30	4	6	12,1[illegible],000	0.0[illegible]	[illegible]	11
Purge	1	1	45	30	3	4	8,66[illegible],000	[illegible]	[illegible]	7.7
Cat. Regen.	1	1	-	20	1	2	4,196,600	[illegible]	[illegible]	3.7
Residuum HDS:										
Start Up	2	4	7,675	230	10	15	43,2[illegible],500	[illegible]	[illegible]	[illegible]
Depressure	2	2	120	43	3	5	9,822,200	[illegible]	[illegible]	5.7
Purge	2	1	70	33	2	3	8,012,500	[illegible]	[illegible]	7.1
Cat. Regen.	4	1	133	25	2	4	5,[illegible],300	[illegible]	[illegible]	5.2
Cat. Reformer:										
Start Up	1	2	-	36	3	5	11,691,000	0.0[illegible]	[illegible]	[illegible]
Depressure	1	1	-	22	2	3	5,320,200	[illegible]	[illegible]	[illegible]
Purge	1	1/2	-	12	2	4	4,[illegible],100	[illegible]	[illegible]	3.9
Cat. Regen.	1	1	-	7	1	1	1,711,900	[illegible]	[illegible]	1.5
Debutanizer:										
Shut Down	1/2	1/2	-	40	28	40	40,654,000	0.02143	[illegible]	26
Naphtha Splitter:										
Shut Down	1/2	1	-	30	24	36	36,463,600	0.02159	1,370	32

HAMPTON ROADS

Unit and Operation	Frequency No/Year	Duration Hours	Pollutant Flow Rate, Pounds/Hour SO_2	NO_x	Particulate	Photo-[illegible]	Flow Rate ACFM	Density Lb/Ft³	Temp. °F	Vel. Ft./Sec.
Depentanizer:										
Shut Down	1	1-3/4	-	9	7	10	17,379,200	0.03313	1,750	15.4
Isomerizer:										
Start Up	1	2	-	33	2	3	8,740,500	0.0[illegible]	1,140	7.7
Depressure	1	1	-	26	3	5	7,604,500	0.0[illegible]	[illegible]	7
Purge	1	1/2	-	1[illegible]	2	3	4,653,800	0.02[illegible]	[illegible]	1
Cat. Regen.	1	1	-	14	2	3	4,279,800	0.0202	[illegible]	3.6
LPG Plant:										
Depressure	1/2	2	2,123	10	6	12	12,000,500	0.02154	1,370	10.6
Purge	1/2	1/2	530	3	2	3	12,561,800	0.02154	1,[illegible]70	11
Hydrogen Unit:										
Start Up	1/2	8	-	114	12	18	27,169,800	0.02014	1,[illegible]60	24
Shut Down	1/2	8	-	114	12	18	27,189,500	0.02014	[illegible]	24

APPENDIX 17

CALCULATIONS AND ASSUMPTIONS USED TO DETERMINE THE EMISSIONS FROM THE WATER COOLING SYSTEM

COOLING TOWER

The only emissions will be in the form of hydrocarbons. Since the system will only operate during the hot summer months, it has been assumed that operation would be three months/year.

Foster Wheeler estimated the water circulation rate as being 8,000 gallons/minute during operation.

The emission factor used was 6 pounds/10^6 gallons of cooling water (AP-42, page 9.1-5).

$$\frac{(0.008\times10^6 \text{ gal/min})(60 \text{ min/hr})(24 \text{ hr/day})(347 \text{ days/yr})(.25)(6 \text{ lb}/10^6 \text{ gal})}{(2000 \text{ pounds/ton})}$$

= 3.00 tons/year

APPENDIX 18

CALCULATIONS AND ASSUMPTIONS USED TO DETERMINE THE EMISSIONS FROM THE OIL-WATER SEPARATION UNITS

LTDS SYSTEM

Uncontrolled Emissions

Use emission factor of 5 pounds/10^3 gallons waste water (Radian).

(5 pounds/10^3 gallons of waste water)(230 gallons/minute)(60 minutes/hour) = 69 pounds/hour

$$\frac{(69 \text{ pounds/hour})(24 \text{ hours/day})(365 \text{ days/year})}{(2000 \text{ pounds/ton})} = \underline{\underline{302.22 \text{ tons/year}}}$$

Controlled Emissions

Use emission factor of 0.2 pounds/10^3 gallons waste water (Radian).

$$\frac{(0.2 \text{ lb}/10^3 \text{ gal. waste water})(0.23\text{x}10^3 \text{ gal/min})(60 \text{ min/hr})(24 \text{ hr/day})(365 \text{ day/yr})}{(2000 \text{ pounds/ton})}$$

$= \underline{\underline{12.09 \text{ tons/year}}}$

Another source of emissions is the diverter and its associated overflow pond. All tank farm water which is felt to be contaminated will be run through this system in addition to process drain overflow. It is very difficult to predict how often it will rain and how much water will be in the overflow pond at any one time. The normal process water flow is 230 gallons/minute through the diverter pump. Since the maximum flow through this pump is 250 gallons/minute, the maximum rate at which overflow water can be reworked through the system is 20 gallons/minute. It must be assumed that the overflow system and diverter pump have been sized so that at the very worst, 20 gallons/minute would maintain equilibrium. The uncontrolled potential from this system if equilibrium were being maintained would then be:

$$\frac{(5 \text{ lb}/10^3 \text{ gal})(0.02\text{x}10^3 \text{ gal/min})(60 \text{ min/hr})(24 \text{ hr/day})(365 \text{ days/yr})}{(2000 \text{ pounds/ton})} =$$

$\underline{\underline{26.28 \text{ tons/year}}}$

This emission factor is for normal process water. The overflow from the diverter will pass through the underflow baffle and the oil will be collected by a brill rope skimmer. This is predicted to effect a hydrocarbon reduction of the water of from 500 ppm to 150 ppm, or 70 percent. This 350 ppm of oil is to be collected in the diverter by the skimmer. In order to ensure that this 350 ppm of recovered oil is not transformed into air pollution before the skimmer can collect it, an additional control measure should be considered. A simple practice which is used in chrome plating tanks is to cover

the surface with plastic floating balls. This provides a very flexible floating roof on the diverter surface. The only vapor space exists in the gaps between the balls. The roof is also flexible enough to allow the skimmer to work around it and will not be effected by the storm water surges. Addition of this system could effect a 70 percent reduction in the process water. If the tank farm storm water is considered to be as dilute as the diverter overflow water, then the actual emissions from this system can be estimated as being:

(26.28 tons/year)(1 - 0.70) = 7.88 tons/year

HTDS SYSTEM

Since there is no diverter on this system, the only source of emissions will be the final separator.

Uncontrolled Emissions

(5 lb/10^3 gallons waste water)(.342 x 10^3 gallons/minute)(60 minutes/hour) = 102.6

$$\frac{(102.6 \text{ pounds/hour})(24 \text{ hours/day})(365 \text{ days/year})}{(2000 \text{ pounds/ton})} = 449.39 \text{ tons/year}$$

Controlled Emissions

$$\frac{(0.2 \text{ lb/hr})(0.342 \times 10^3 \text{ gal/min})(60 \text{ min/hr})(24 \text{ hrs/day})(365 \text{ days/yr})}{(2000 \text{ pounds/ton})} =$$

17.98 tons/year

APPENDIX 19

CALCULATIONS AND ASSUMPTIONS USED TO DETERMINE THE EMISSIONS FROM THE SLUDGE INCINERATOR

MULTIPLE-HEARTH INCINERATOR

Amounts of primary sludge recovered have been estimated to be:

Low TDS system:	25 pounds/hour
High TDS system:	100 pounds/hour
Ballast water:	60 pounds/hour
TOTAL:	185 pounds/hour

Amounts of secondary sludge have been estimated to be 100 pounds/hour

The input to the incinerator could average 285 pounds/hour if the unit is continuous.

$$\frac{(285 \text{ pounds/hour})(24 \text{ hours/day})(347 \text{ days/year})}{(2000 \text{ pounds/ton})} = 1186.74 \text{ tons/year}$$

Particulate Emissions

Uncontrolled Emissions: Use emission factors from AP-42, page 2.5-2.

$$\frac{(100 \text{ pounds/ton})(1186.74 \text{ tons/year})}{(2000 \text{ pounds/ton})} = \underline{\underline{59.34 \text{ tons/year}}}$$

Controlled Emissions:

$$\frac{(3 \text{ pounds/ton})(1186.74 \text{ tons/year})}{(2000 \text{ pounds/ton})} = \underline{\underline{1.78 \text{ tons/year}}}$$

Sulfur Dioxide Emissions

Use emission factors from AP-42, page 2.5-2.

Uncontrolled Emissions:

$$\frac{(1 \text{ pound/ton})(1186.74 \text{ tons/year})}{(2000 \text{ pounds/ton})} = \underline{\underline{0.59 \text{ tons/year}}}$$

Controlled Emissions:

$$\frac{(0.8 \text{ pounds/ton})(1186.74 \text{ tons/year})}{(2000 \text{ pounds/ton})} = \underline{\underline{0.47 \text{ tons/year}}}$$

Nitrogen Oxides (NO_2) Emissions

Use emission factors from AP-42, page 2.5-2.

Uncontrolled Emissions:

$$\frac{(6 \text{ pounds/ton})(1186.74 \text{ tons/year})}{(2000 \text{ pounds/ton})} = \underline{\underline{3.56 \text{ tons/year}}}$$

Controlled Emissions:

$$\frac{(5 \text{ pounds/ton})(1186.74 \text{ tons/year})}{(2000 \text{ pounds/ton})} = \underline{\underline{2.97 \text{ tons/year}}}$$

Hydrocarbon Emissions

Use emission factors from AP-42, page 2.5-2.

Uncontrolled Emissions:

$$\frac{(1.5 \text{ pounds/ton})(1186.74 \text{ tons/year})}{(2000 \text{ pounds/ton})} = \underline{\underline{0.89 \text{ tons/year}}}$$

Controlled Emissions:

$$\frac{(1 \text{ pound/ton})(1186.74 \text{ tons/year})}{(2000 \text{ pounds/ton})} = \underline{\underline{0.59 \text{ tons/year}}}$$

APPENDIX 20

CALCULATIONS AND ASSUMPTIONS USED TO DETERMINE THE EMISSIONS FROM CRUDE OIL UNLOADING

BOILER OPERATIONS

542.27 barrels of fuel are used per visit

(542.27 barrels/visit)(107 visits/year) = 58,023 barrels/year of fuel burned

Particulate Emissions

Uncontrolled (Non-Inerting) Emissions: use emission factor of 0.966 pounds/barrel of fuel burned.[1]

$$\frac{(0.966 \text{ pounds/barrel})(58{,}023 \text{ barrels/year})}{(2000 \text{ pounds/ton})} = \underline{\underline{28.03 \text{ tons/year}}}$$

Controlled (Inerting) Emissions: PES estimated in the Alaskan crude oil project that 59 percent of the fuel used per visit was associated with the discharging of crude oil. During discharge, approximately 15 percent of the combustion gases generated are routed to the tanker holds for inerting purposes.

$$(28.03 \text{ tons/year})[1 - (0.59)(0.15)] = \underline{\underline{25.55 \text{ tons/year}}}$$

Sulfur Dioxide Emissions

Assume fuel oil used to be #6 fuel oil with 1.5 percent sulfur.[2] Emission factor used is 6.7 (percent sulfur) pounds/barrel of fuel oil burned (Esso).

Uncontrolled Emissions:

$$\frac{[6.7(1.5) \text{ pounds/barrel}](58{,}023 \text{ barrels/year})}{(2000 \text{ pounds/ton})} = \underline{\underline{291.57 \text{ tons/year}}}$$

Controlled Emissions:

$$(291.57 \text{ tons/year})[1 - (0.59)(0.15)] = \underline{\underline{265.77 \text{ tons/year}}}$$

---

[1] Esso Research and Engineering Company. Survey of Ship Discharges, Report on Contract No. C-1-35049 to Maritime Administration, Office of Research and Development, July 1974.

[2] Assumption made by Federal Energy Administration for West Coast traffic.

Nitrogen Oxides (NO_2) Emissions

Emission factor used is 4.36 pounds/barrel of fuel oil burned (Esso).

Uncontrolled Emissions:

$$\frac{(4.36 \text{ pounds/barrel})(58{,}023 \text{ barrels/year})}{(2000 \text{ pounds/ton})} = \underline{\underline{126.49 \text{ tons/year}}}$$

Controlled Emissions:

$$(126.49 \text{ tons/year})[1 - (0.59)(0.15)] = \underline{\underline{115.30 \text{ tons/year}}}$$

Hydrocarbon Emissions

Use emission factor of 0.134 pounds/barrel of fuel burned (Esso).

Uncontrolled Emissions:

$$\frac{(0.134 \text{ pounds/barrel})(58{,}023 \text{ barrels/year})}{(2000 \text{ pounds/ton})} = \underline{\underline{3.89 \text{ tons/year}}}$$

Controlled Emissions (combustion contaminants routed to the tanker hold):

$$(3.89 \text{ tons/year})[1 - (0.59)(0.15)] = \underline{\underline{3.55 \text{ tons/year}}}$$

REFUELING

Uncontrolled and controlled situations are the same. Use emission factor of 0.61 pounds/visit.

$$\frac{(0.61 \text{ pounds/visit})(107 \text{ visits/year})}{(2000 \text{ pounds/ton})} = \underline{\underline{0.03 \text{ tons/year}}}$$

VENTING

Uncontrolled (Non-Inerting) System for 5 Percent Hydrocarbon Vapors:

$$\frac{(998 \text{ pounds/visit})(107 \text{ visits/year})}{(2000 \text{ pounds/ton})} = \underline{\underline{53.39 \text{ tons/year}}}$$

Controlled (Inerting) System: no emissions of hydrocarbon vapors.

BALLASTING

Emission factor assumes 20 percent of the ballast by weight would be added in port.

Uncontrolled (Non-Segregated) Emissions:

$$\frac{(1978 \text{ pounds/visit})(107 \text{ visits/year})}{(2000 \text{ pounds/ton})} = \underline{105.82 \text{ tons/year}}$$

Controlled (Segregated) Emissions: if a segregated ballast of between 15 and 18 percent is used, the hydrocarbon emissions drop to essentially zero.

PURGING

This process is only possible on a tanker capable of inerting. The possibility of converting an existing non-inerting tanker to inerting capabilities is considered. The emission factor used prorates existing factors and assumes that 50 percent of the tanker hold gas (containing 5 percent hydrocarbons) is purged to the ambient air to reduce the hold atmosphere to below the lower explosive limit on each visit.

$$\frac{(9987 \text{ pounds/visit})(107 \text{ visits/year})}{(2000 \text{ pounds/ton})} = \underline{534.30 \text{ tons/year}}$$

APPENDIX 21

CALCULATIONS AND ASSUMPTIONS USED TO DETERMINE THE EMISSIONS FROM MARKETING FACILITIES

AMOUNTS OF PRODUCTS FROM THE HREC REFINERY

30,000 barrels/calendar day of regular gasoline = 1,260,000 gallons/day
6,273 barrels/calendar day of premium gasoline = 263,466 gallons/day
21,324 barrels/calendar day of Jet A-1 fuel = 895,608 gallons/day
34,787 barrels/calendar day of #2 fuel oil = 1,461,054 gallons/day
66,723 barrels/calendar day of #5 fuel oil = 2,802,366 gallons/day

CASE I: 20,000 gallons/day of gasoline will leave by truck loading rack

40 percent of all remaining products will leave by pipeline:

gasoline:	601,386 gallons/day
Jet A-1 fuel:	358,243 gallons/day
#2 fuel oil:	584,422 gallons/day
#5 fuel oil:	1,120,946 gallons/day

The remaining material will leave by barge:

gasoline:	902,080 gallons/day
Jet A-1 fuel:	537,365 gallons/day
#2 fuel oil:	876,632 gallons/day
#5 fuel oil:	1,681,420 gallons/day

PIPELINE EMISSIONS

Assume each product pumped has one pump and five valves associated with transferring and switching into the line.

Controlled Pump Seal Emissions

Gasoline pump seal:	2.7 pounds/day
Jet A-1 fuel pump seal:	0.3 pounds/day
#2 fuel oil pump seal:	0.0 pounds/day
#5 fuel oil pump seal:	0.0 pounds/day
TOTAL:	3.0 pounds/day

$$\frac{(3.0 \text{ pounds/day})(365 \text{ days/year})}{(2000 \text{ pounds/ton})} = \underline{\underline{0.55 \text{ tons/year}}}$$

Uncontrolled Pump Seal Emissions

(5 pounds/seal-day)(4 seals) = 20 pounds/day

$$\frac{(20 \text{ pounds/day})(365 \text{ days/year})}{(2000 \text{ pounds/ton})} = \underline{\underline{3.65 \text{ tons/year}}}$$

Uncontrolled Pipeline Valves Emissions

Use Radian emission factor. (Consider controlled emissions to be the same.)

$$\frac{(0.15 \text{ pounds/day-valve})(20 \text{ valves})(365 \text{ day/year})}{(2000 \text{ pounds/ton})} = 0.55 \text{ tons/year}$$

GASOLINE TRUCK LOADING RACK

Splash Loading

Use general AP-42 emission factor and not equation due to lack of information.

$$\frac{(20 \times 10^3 \text{ gallons/day loaded})(12.4 \text{ pounds}/10^3 \text{ gallons})(365 \text{ days/year})}{(2000 \text{ pounds/ton})}$$

$$= \underline{\underline{45.26 \text{ tons/year}}}$$

Submerged Fill

$$\frac{(20 \times 10^3 \text{ gallons/day loaded})(4.1 \text{ pounds}/10^3 \text{ gallons})(365 \text{ days/year})}{(2000 \text{ pounds/ton})}$$

$$= \underline{\underline{14.97 \text{ tons/year}}}$$

MARINE BARGE LOADING

Use Radian equation of $L = 12.46 \frac{SPM}{T}$ for all products except gasoline which uses straight Radian emission factors. For the purpose of this examination, it will be assumed that barges are cleaned in transit.

Uncontrolled Emissions (includes submerged fill and bottom loading):

Gasoline:

$$\frac{(1.2 \text{ pounds}/10^3 \text{ gallons})(902.08 \times 10^3 \text{ gallons/day})(347 \text{ days/year})}{(2000 \text{ pounds/ton})}$$

$$= \underline{\underline{197.56 \text{ tons/year}}}$$

Jet A-1 Fuel: equation is $\frac{12.46(0.20)(1.0)(80)}{(70)} = 2.848$ pounds/10^3 gallons

$$\frac{(2.848 \text{ pounds}/10^3 \text{ gallons})(537.365 \times 10^3 \text{ gallons/day})(365 \text{ days/year})}{(2000 \text{ pounds/ton})}$$

279.30 tons/year

#2 Fuel Oil: equation is $\frac{12.46(0.20)(0.05)(130)}{70} = 0.2314$ pounds/10^3 gallons

$$\frac{(0.2314 \text{ pounds}/10^3 \text{ gallons})(876.632 \times 10^3 \text{ gallons/day})(365 \text{ days/year})}{(2000 \text{ pounds/ton})} =$$

37.02 tons/year

#5 Fuel Oil: equation is $\frac{12.46(0.20)(0.008)(190)}{70} = 0.054$ pounds/10^3 gallons

$$\frac{(0.054 \text{ pounds}/10^3 \text{ gallons})(1681.42 \times 10^3 \text{ gallons/day})(365 \text{ days/year})}{(2000 \text{ pounds/ton})} =$$

16.57 tons/year

Vapor Recovery Emissions

Assumed 90 percent collection efficiency.

(530.45 tons/year)(1 - 0.90) = 53.045 tons/year

Tugboat Emissions

The barge has an estimated volume of 40' x 150' x 10' = 60,000 cubic feet

$$\frac{(7.48 \text{ gallons/cubic foot})(60{,}000 \text{ cubic feet/barge})}{(42 \text{ gallons/barrel})} = 10{,}686 \text{ barrels/barge}$$

If the barges are assumed to average being 95 percent filled with product, then each barge will transport 10.15 barrels.

Case I considers 3,997,497 gallons/day leaving by barge

$$\frac{(3{,}997{,}497 \text{ gallons/day})}{(10{,}152 \text{ barrels/barge})(42 \text{ gallons/barrel})} = 9.375 \text{ barges/day}$$

(9.375 barges/day)(365 days/year) = 3422 barges/year

Since a tugboat is required to move each barge, within five miles of the refinery each barge will necessitate the use of ten tugboat miles.

(3422 barges/year)(10 tugboat miles/barge) = 34,220 tugboat miles/year

Particulates:

Use emission factor of 2 pounds/tugboat mile, AP-42, Tables 3.2,3-2.

$$\frac{(2 \text{ pounds/tugboat mile})(34{,}220 \text{ tugboat miles/year})}{(2000 \text{ pounds/ton})} = \underline{\underline{34.22 \text{ tons/year}}}$$

Sulfur Dioxide:

Use emission factor of 3 (percent sulfur) pounds/tugboat mile and 0.5 percent sulfur content

$$\frac{[3(0.5) \text{ pounds/tugboat mile}](34{,}220 \text{ tugboat miles/year})}{(2000 \text{ pounds/ton})} = \underline{\underline{25.67 \text{ tons/year}}}$$

Hydrocarbons:

Use emission factor of 0.9 pounds/tugboat mile, AP-42, Tables 3.2.3-2

$$\frac{(0.9 \text{ pounds/tugboat mile})(34{,}220 \text{ tugboat miles/year})}{(2000 \text{ pounds/ton})} = \underline{\underline{15.40 \text{ tons/year}}}$$

NO_2:

Use emission factor of 1.4 pounds/tugboat mile, AP-42, Tables 3.2.3-2

$$\frac{(1.4 \text{ pounds/tugboat mile})(34{,}220 \text{ tugboat miles/year})}{(2000 \text{ pounds/ton})} = \underline{\underline{23.95 \text{ tons/year}}}$$

CASE II:

All products leaving by barge.

Uncontrolled Emissions (includes submerged fill and bottom loading):

$$\frac{(1.2 \text{ pounds}/10^3 \text{ gallons})^*(1523.466 \times 10^3 \text{ gallons/day})(365 \text{ days/year})}{(2000 \text{ pounds/ton})} =$$

333.64 tons/year

Jet Fuel:

$$\frac{(2.848 \text{ pounds}/10^3 \text{ gallons})(895.608 \times 10^3 \text{ gallons/day})(365 \text{ days/year})}{(2000 \text{ pounds/ton})} =$$

465.50 tons/year

#2 Fuel Oil:

$$\frac{(0.2314 \text{ pounds}/10^3 \text{ gallons})(1461.054 \times 10^3 \text{ gallons/day})(365 \text{ days/year})}{(2000 \text{ pounds/ton})} =$$

61.70 tons/year

#6 Fuel Oil:

$$\frac{(0.054 \text{ pounds}/10^3 \text{ gallons})(2802.366 \times 10^3 \text{ gallons/day})(365 \text{ days/year})}{(2000 \text{ pounds/ton})} =$$

27.62 tons/year

Controlled Emissions (based upon use of a 90 percnet efficient vapor):

Gasoline:

(33.64 tons/year)(1 - 0.9) = 33.4 tons/year

Jet Fuel:

(465.50 tons/year)(1 - 0.9) = 46.6 tons/year

*Emission factor for clean barges.

#2 Fuel Oil:

(16.70 tons/year)(1 - 0.9) = 6.2 tons/year

#6 Fuel Oil:

(27.62 tons/year)(1 - 0.9) = 2.8 tons/year

Tugboat Emissions

Case II considers 6,682,494 gallons/day leaving by barge

$$\frac{(6{,}682{,}494 \text{ gallons/day})(365 \text{ days/year})}{(10{,}152 \text{ barrels/barge})(42 \text{ gallons/barrel})} = 5721 \text{ barges/year}$$

(5721 barges/year)(10 tugboat miles/barge) = 57,210 tugboat miles/year

All emission factors used come from AP-42, Tables 3.2.3-2

Particulates:

$$\frac{(2 \text{ pounds/tugboat mile})(57{,}210 \text{ tugboat miles/year})}{(2000 \text{ pounds/ton})} = 57.21 \text{ tons/year}$$

Sulfur Dioxide:

$$\frac{[3(0.5) \text{ pounds/tugboat mile}](57{,}210 \text{ tugboat miles/year})}{(2000 \text{ pounds/ton})} = 42.91 \text{ tons/year}$$

Hydrocarbons:

$$\frac{(0.9 \text{ pounds/tugboat mile})(57{,}210 \text{ tugboat miles/year})}{(2000 \text{ pounds/ton})} = 25.74 \text{ tons/year}$$

NO_2:

$$\frac{(1.4 \text{ pounds/tugboat mile})(57{,}210 \text{ tugboat miles/year})}{(2000 \text{ pounds/ton})} = 40.05 \text{ tons/year}$$

APPENDIX 22

CALCULATIONS AND ASSUMPTIONS USED TO DETERMINE EMISSIONS FROM THE STORAGE TANK FACILITIES

CALCULATION OF STORAGE TANK LOSSES

A. FLOATING ROOF TANKS

The following equations are used to calculate standing storage losses and withdrawl losses from floating roof tanks. These equations are the modified version of the API equation after introduction of a (0.08 x W) factor as recommended by API in API bulletion 2523.

- Standing Storage Losses

$$S = 0.00921\ (M)\ (D)^{1.5} \left[\frac{P}{14.7-P}\right]^{0.7} (V_w)^{0.7} (K_t)(K_s)(K_p)(K_c)\ \text{lbs/day}$$

for tanks $\leq$ 150 ft diameter

$$S = 0.00921\ (M)\ (D \times \sqrt{150})\ \left[\frac{P}{14.7-P}\right]^{0.7} (V_w)^{0.7} (K_t)(K_s)(K_p)(K_c)\ \text{lbs/day}$$

for tanks > 150 ft diameter

- Withdrawl Losses (for gasoline only)*

$$LWD = \frac{22.4\ (d)(S_F)}{D}\ \text{lb/1000 gal throughput.}$$

*Radian stated that this equation was derived from gasoline data and its applicability to other stored liquids is uncertain. Therefore PES did not use this equation for other liquids.

NOMENCLATURE

P = True vapor pressure at bulk liquid temperature, psia

D = Tank diameter, Ft

H = Average vapor space height, including correction for roof volume, Ft

ΔT = Average daily ambient temperature change, ^{o}F

F_p = Paint factor, fixed roof tank

C = Adjustment factor for tanks smaller than 20 feet in diameter

V_c = Capacity of tanks, bbls

W = d = vapor density, lb/gal

K_c = Characterization factor depending on type of product stored and tank

M = Vapor molecular weight, lb/lb-mole

B_g = Breathing losses of gasoline

m = Factor dependent on liquid stored

K_n = Turnover factor = (180+N/6N)

N = Number of turnovers per year (ratio of annual throughput to tank capacity)

K_t = Factor dependent on tank construction

V_w = Average wind velocity, miles/hour

K_s = Seal factor

K_p = Paint factor for color of shell and roof, floating roof tanks

L_w = Working losses; lb/1000 gal throughput

S = Standing storage losses, lb/D x 10^3 gal capacity; or; bbls/yr; or lbs/day

L_{wd} = Withdrawl losses; floating roof tank, bbls/10^6bbl throughput; or lb/1000 gal throughput

C_F = Tank construction factor

* for D $\geq$150; use $D\sqrt{150}$ instead of $D^{1.5}$

Tanks 1 to 11

Product stored: Crude oil

Capacity of each tank: 22050×10^3 gallons

Total throughput: $2{,}682{,}742 \times 10^3$ gallons/yr (total of 11 tanks)

$P = 2.0$ psia; $V_w = 11.025$ mile/hr; $D = 264$ ft

$M = 50.0$ lb/lb mole, $K_t = 0.045$, $K_s = 1.0$, $K_p = 1.0$, $K_c = 0.84$

Standing Storage Losses

$$= 0.00921\ (M)\ (D \times \sqrt{150})\ \left[\frac{P}{14.7-P}\right]^{0.7}\ V_w^{0.7}\ K_t\ K_s\ K_p\ K_c \text{ lbs/day}$$

$$0.00921 \times 50 \times 264 \times \sqrt{150}\ \left[\frac{2.0}{14.7-2.0}\right]^{0.7}\ (11.025)^{0.7} \times 0.045 \times 1.0 \times 1.0 \times 0.84 \text{ lbs/day}$$

82.81 lbs/day

Total Standing Storage Losses (all 11 tanks)

$$82.81(\text{lbs/day}) \times 365\ (\text{D/yr}) \times \frac{1}{2000}\ (\text{T/lb}) \times 11 = 166.24\ \text{T/yr}$$

- Tanks 29-32 (Total 4 tanks)

Product: Gasoline

Capacity/Tank: 4220×10^3 gallons

Throughput: $566{,}663 \times 10^3$ gallons/yr (total of 4 tanks)

$P = 5.2$ psia, $V_w = 11.025$ mile/hr, $D = 134$ ft

$M = 68$ lb/lb mole, $K_t = 0.045$, $K_s = 1.0$, $K_p = 0.9$, $K_c = 1.0$

Standing Storage Losses

$$S = 0.00921 \times 68 \times (134)^{1.5} \times \left(\frac{5.2}{14.7-5.2}\right)^{0.7} \times (11.025)^{0.7} \times 0.045 \times 1.0 \times 0.9 \times 1.0$$

$= 138.5$ lbs/day per tank

$= 138.5$ (lbs/day) $\times$ 365 (day/yr) $\times \frac{1}{2000}$ (T/lbs) $\times$ 4 (No. of tanks)

$= 101.2$ T/yr

Withdrawl Losses

$$L_{wd} = \frac{(22.4)(5.6) \times 0.02}{134} \left(\frac{\text{lb}}{1000 \text{ gal thruput}}\right) \times 566{,}663 \times 10^3 \left(\frac{\text{gal thruput}}{\text{yr}}\right)$$

$= 10{,}609$ lbs/yr

$L_{wd} = 5.3$ T/yr

Total Losses: $S + L_{wd} = (101.2 + 5.2)$ T/yr

$= 106.5$ T/yr

- Tanks 33-34 (Total 2 tanks)

Product: Jet fuel

Capacity/tank = 13,649 x 10^3 gallons

Throughput = 326,897 x 10^3 gallons/yr (for total of 2 tanks)

P = 1.0 psia; V_w = 11.025 mile/hr; D = 220 ft

M = 80 lb/lb mole; K_t = 0.045; K_s = 1.0; K_p = 1.0; K_c =1.0

Standing Storage Losses

$$S = 0.00921 \times 80 \times 220 \times \sqrt{150} \times \left(\frac{1.0}{14.7-1.0}\right)^{0.7} \times (11.025)^{0.7} \times 0.045 \times 1.0 \times 1.0 \times 1.0$$

= 76.74 lbs/day per tank

= 76.74 (lbs/day) x 365 (day/yr) x $\frac{1}{2000}$ (T/lbs) x 2 (tanks)

S = 28.0 T/yr

- Tanks 46-47 (Total 2 tanks)

Product: Regular naphtha

Capacity/Tank: 5,064 x 10^3 gallons

Throughput: 457,430 x 10^3 gallons/yr (total for 2 tanks)

P = 1.0 psia, V_w = 11.025 mile/hr; D = 134 ft

M = 80 lb/lb mole; K_t = 0.045; K_s = 1.0; K_p = 0.9; K_c = 1.0

Standing Storage Losses

$$S = 0.00921 \times 80 \times (134)^{1.5} \times \left(\frac{1.0}{14.7-1.0}\right)^{0.7} \times (11.025)^{0.7} \times 0.045 \times 1.0 \times 0.9 \times 1.0$$

= 39.8 lbs/day per tank

= 39.8 (lbs/day) x 365 (D/yr) x $\frac{1}{2000}$ (T/lb) x 2 (tanks)

= 14.5 T/yr

- Tanks 48-49 (Total 2 tanks)

Product: Light naphtha

Capacity: $2{,}105 \times 10^3$ gallons each tank

Throughput: $177{,}912 \times 10^3$ gallons/yr

$P = 3.5$ psia; $V_w = 11.025$ mile/hr; $D = 80$ ft

$M = 68$ lb/lb mole; $K_t = 0.045$; $K_s = 1.0$; $K_p = 0.9$; $K_c = 1.0$

Standing Storage Losses

$$S = 0.0092 \times 68 \times (80)^{1.5} \times \left(\frac{3.5}{14.7-3.5}\right)^{0.7} (11.025)^{0.7} \times 1.0 \times 0.9 \times 1.0 \times (0.045)$$

$= 43.1$ lbs/day per tank

$= 43.1$ (lb/day) $\times$ 365 (days/yr) $\times \frac{1}{2000}$ (T/lb) $\times$ 2 (tanks)

$= 15.7$ T/yr

B. FIXED ROOF TANKS

Using Radian Equations:

$$B = \text{Breathing losses} = 0.000221 \times M \times \left[\frac{P}{14.7-P}\right]^{0.68} \times D^{1.73} \times H^{0.51} \times \Delta T^{0.5} \times F_P \times C \times K_c \quad \text{lbs/day}$$

$$L_w = \text{Working losses} = 0.024 \times M \times P \times K_n \times K_c \text{ lbs/1000 gal throughput}$$

$$K_n = \left(\frac{180 + N}{6N}\right)$$

- <u>Tanks 35-38</u> (total of 4 tanks)

Product: No. 2 fuel oil

Capacity/tank: $13,649 \times 10^3$ gallons

Throughput: $533,285 \times 10^3$ gallons/yr (total for 4 tanks)

No. of turnovers/yr = $N \cong 10.0$

$P = 0.05$ psia; $D = 220$ ft, $H = 24$ ft, $\Delta T = 16.1\ ^{o}F$, $F_P = 1.0$, $C = 1$, $K_c = 1.0$, $M = 130$ lbs/lb mole

<u>Breathing Losses</u>

$$B = 0.000221 \times 130\left(\frac{0.05}{14.7-0.05}\right)^{0.68} \times (220)^{1.73} \times (24)^{0.51} \times (16.1)^{0.5} \times 1.0 \times 1.0$$

$= 138.2$ lbs/day per tank

$= 138.2$ (lb/day) $\times$ 365 (day/yr) $\times \frac{1}{2000}$ (T/lb) $\times$ 4 (tanks)

$= 100.9$ T/yr

<u>Working Losses</u>

$K_n = 1.0$

$$L_w = 0.024 \times 130 \times 0.05 \times 1.0 \times 1.0\left(\frac{\text{lb}}{10^3 \text{ gal thruput}}\right) \times 533,285 \times 10^3 \quad \text{(gals/yr)}$$

$= 83,192$ lbs/yr

$= 41.6$ T/yr

Total Losses = $B + L_w = (100.9 + 41.6)$ T/yr

$= 142.5$ T/yr

- Tanks 39-45 (Total of 7 tanks)

Product: No. 5 fuel oil

Capacity/tank: $10{,}660 \times 10^3$ gallons

Throughput: $1{,}022{,}864 \times 10^3$ gallons/yr (Total for 7 tanks)

No. of turnovers/yr = N = 13

P = 0.008 psia, D = 180 ft, H = 28 ft, $\Delta T = 16.1°F$, $F_P = 1.33$,* C = 1.0, $K_c = 1.0$, M = 190 lb/lb mole

Breathing Losses

$$B = 0.000221 \times 190 \left(\frac{0.008}{14.7-0.008}\right)^{0.68} \times (180)^{1.73} \times (28)^{0.51} \times (16.1)^{0.5} \times 1.33 \times 1.0 \times 1.0$$

$= 59.0$ lbs/day per tank

$= 59.0$ (lbs/day) x 365 (day/yr) x $\frac{1}{2000}$ (T/lb) x 7 (tanks)

$= 75.4$ T/yr

Working Losses

$K_n = 1.0$

$$L_w = 0.024 \times 190 \times 0.008 \times 1.0 \times 0.92 \left(\frac{\text{lb}}{10^3 \text{ gals thruput}}\right) 1{,}022{,}864 \times 10^3 \left(\frac{\text{gals}}{\text{yr}}\right)$$

$= 34{,}329.0$ lbs/yr

$= 17.2$ T/yr

Total Losses = $B + L_w$ = (75.4 + 17.2) T/yr

= 92.4 T/yr

*Use colored tanks to aid in keeping the liquid pourable.

- Tanks 50-52 (Total of 3 tanks)

Product: Gas oil

Capacity/tank: $7,644 \times 10^3$ gallons

Throughput: $540,842 \times 10^3$ gallons/year (For total of 3 tanks)

No. of turnovers/yr = N = 24.0

P = 0.0152 psia; D = 180 ft, H = 20 ft, ΔT = 16.1 °F, F_p = 1.0, C = 1.0

K_c =1.0, M = 130 lb/lb mole

Breathing Losses

$$B = 0.000221 \times 130 \left(\frac{0.0152}{14.7-0.0152}\right)^{0.68} \times (180)^{1.73} \times (20)^{0.51} \times (16.1)^{0.5} \times 1.0 \times 1.0 \times 1.0$$

= 39.5 lbs/day per tank

$= 39.5 \text{ (lb/day)} \times 365 \text{ (day/yr)} \times \frac{1}{2000} \text{ (T/lb)} \times 3 \text{ (tanks)}$

= 21.7 T/yr

Working Losses

$K_n = 1.0$

$$L_w = 0.024 \times 130 \times 0.0152 \times 1.0 \times 1.0 \left(\frac{\text{lb}}{10^3 \text{ gals thruput}}\right) \times 540,842 \times 10^3 \left(\frac{\text{gals}}{\text{yr}}\right)$$

= 25,649 lbs/yr

= 12.8 T/yr (Total for 3 tanks)

Total Losses = $B + L_w$ = (21.7 + 12.8) T/yr

= 34.5 T/yr

- Tanks 53-55 (Total of 3 tanks)

Product: Residuum (atmospheric) kept at 250°F by heating

Capacity/tank: $18,951 \times 10^3$ gallons

Throughput: $1,203,200 \times 10^3$ gallons/yr (For total of 3 tanks)

P = 0.00632 psia,* D = 240 ft, H = 28 ft, ΔT = 16.1°F, F_p =1.46, C = 1.0, K_c = 1.0, M = 190 lb/lb mole

Breathing Losses

$$B = 0.000221 \times 190 \left(\frac{0.00632}{14.7-0.00632}\right)^{0.68} \times (28)^{0.51} \times (240)^{1.73} \times (16.1)^{0.5} \times 1.46 \times 1.0 \times 1.0$$

= 90.7 lbs/day per tank

$$= 90.7 \text{ (lb/day)} \times 365 \text{ (D/yr)} \times \frac{1}{2000} \text{ (T/lb)} \times 3 \text{ (tanks)}$$

= 49.7 T/yr

Working Losses

K_n = 1.0

$$L_w = 0.024 \times 190 \times 0.00632 \times 1.0 \times 1.0 \left(\frac{\text{lb}}{10^3 \text{ gals thruput}}\right) \times 1,203,200 \times 10^3 \left(\frac{\text{gals}}{\text{yr}}\right)$$

= 34,675 lbs/yr (Total for 3 tanks)

= 17.3 T/yr

Total Losses = $B + L_w$ = (49.7 + 17.3) T/yr

= 67.0 T/yr

*Losses are quite high as compared to reported data by Foster Wheeler because Foster Wheeler used vapor pressure 0.0005 psia which is at 60°F, while actual storage condition is at 250°F which when correlated to vapor pressure yields a value of 0.00632 psia. (See following page.)

- VAPOR PRESSURE OF ATMOSPHERIC RESIDUUM

Atmospheric residuum will be stored in tanks 53-55. Since at room temperature it is highly viscous, these tanks will be kept at a temperature of 250°F to ease movement into and out of the tanks. Vapor pressure data for atmospheric residuum at this temperature is not known. In the absence of this information, vapor pressure data corresponding to residual oil No. 6 is used. However, the vapor pressure data for No. 6 residual oil is only available up to 100°F. These values are plotted as Log P_V versus 1/T according to a general equation as follows:

$$\ln P_{VP} = A + B/T^{*}$$

P_{VP} = Vapor pressure, ATM

T = °K

The above equation is a very generalized equation. However, in the absence of data, it is used for the purpose of this report.

RESIDUAL OIL No. 6

t,°F	T,°K	1/T	P_{VP}=psia	P_{VP} = ATM
40	277.4	0.00360	0.00002	0.00000136
50	283.0	0.00353	0.00003	0.00000204
60	288.6	0.00347	0.00004	0.00000272
70	294.1	0.00340	0.00006	0.00000408
80	299.7	0.00333	0.00009	0.00000612
90	305.2	0.00328	0.00013	0.00000884
100	310.8	0.00322	0.00019	0.00001290
200	366.0	0.00273	--	--
250	394.0	0.00254	--	--
300	422.0	0.00237	--	--

When this data is plotted (see following graph):

P_V at 250°F i.e. at 0.00254 is 0.0043 ATM

= 0.0043 (ATM) x 14.7 (psia/ATM)

= 0.00632 psig

*Reid, Sherwood: Properties of Gases and Liquids, Second Edition, McGraw Hill, p.114.

Reproduced from best available copy.

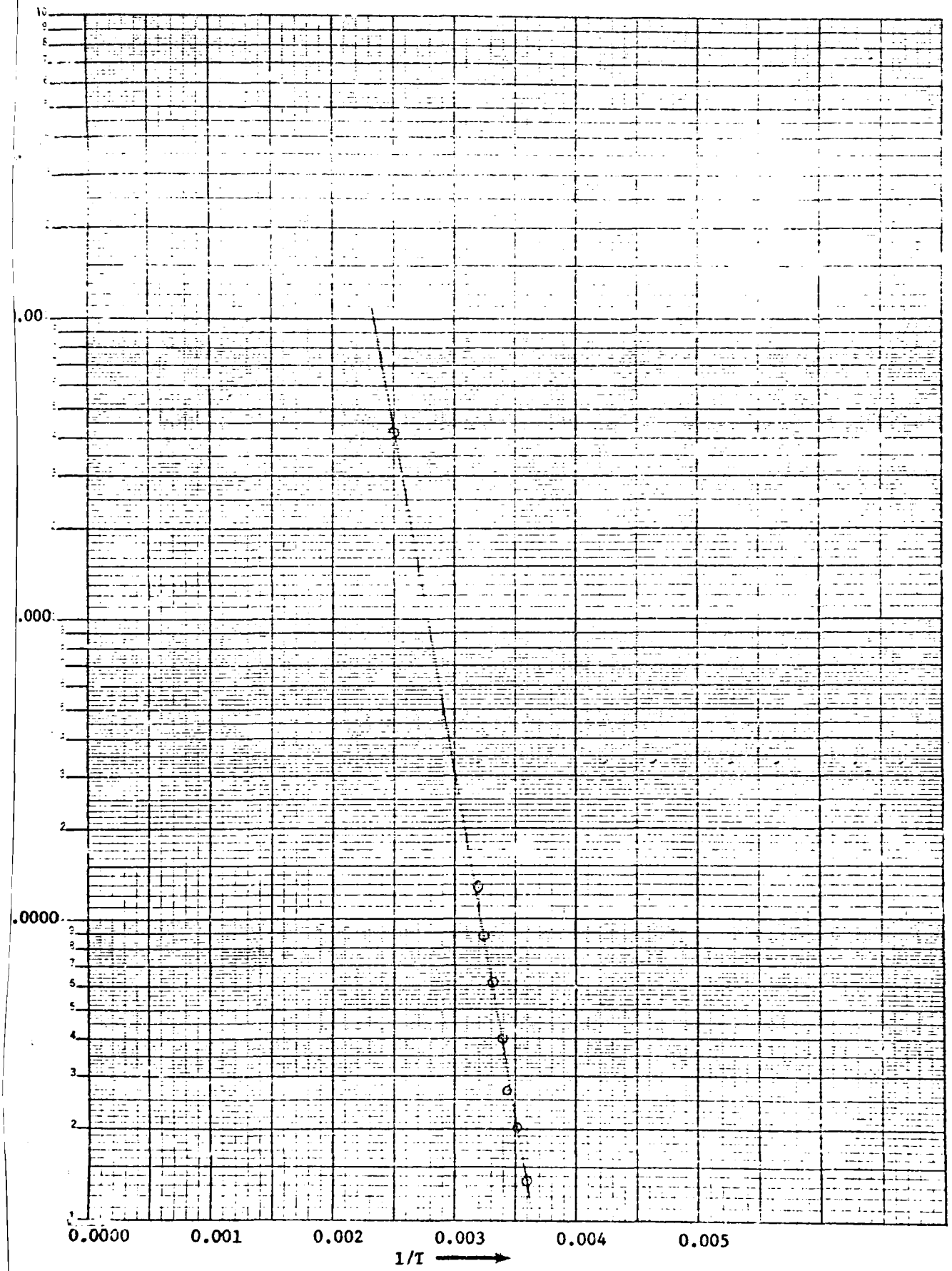

A-22.13

- Tanks 56-57 (Total of 2 tanks)

Product: Refinery fuel oil

Capacity/tank: $2,350 \times 10^3$ gallons

Throughput: $156,472 \times 10^3$ gallons/yr (For total of 2 tanks)

$P = 0.008$ psia, $D = 100$ ft, $H = 20$ ft, $\Delta T = 16.1°F$, $F_P = 1.33$, $C = 1.0$,

$K_c = 1.0$, $M = 190$ lb/lb mole

Turnovers/yr = $N \simeq 33$

Breathing Losses

$$B = 0.000221 \times 190 \left(\frac{0.008}{14.7-0.008}\right)^{0.68} \times (100)^{1.73} \times (20)^{0.51} \times (16.1)^{0.5} \times 1.33 \times 1.0 \times 1.0$$

$= 18.0$ lbs/day per tank

$= 18.0$ (lbs/day) $\times$ 365 (day/yr) $\times \frac{1}{2000}$ (T/lb) $\times$ 2 (tanks)

$= 6.6$ T/yr

Working Losses

$K_n = 1.0$

$$L_w = 0.024 \times 190 \times 0.008 \times 1.0 \times 1.0 \left(\frac{\text{lb}}{10^3 \text{ gals thruput}}\right) \times 156,472 \times 10^3 \left(\frac{\text{gals}}{\text{yr}}\right)$$

$= 5,708$ lbs/yr

$= 2.9$ T/yr (Total for 2 tanks)

Total Losses = $B + L_w = (6.6 + 2.9)$ T/yr

$= 9.5$ T/yr

- Tanks 58-59 (Total of 2 tanks)

Product: Slop oil

Capacity/tank: $2{,}350 \times 10^3$ gallons

Throughput: $156{,}472 \times 10^3$ gallons/yr (For total of 2 tanks)

Turnovers/yr = 33

$P = 0.05$ psia, $D = 100$ ft, $H = 20$ ft, $\Delta T = 16.1°F$, $F_p = 1.33$, $C = 1.0$, $K_c = 1.0$, $M = 130$ lb/lb mole

Breathing Losses

$$B = 0.000221 \times 130\left(\frac{0.05}{14.7-0.05}\right)^{0.68} \times (100)^{1.73} \times (20)^{0.51} \times (16.1)^{0.5} \times 1.33 \times 1.0 \times 1.0$$

$= 42.8$ lbs/day per tank

$= 42.8$ (lbs/day) x 365 (day/yr) x $\frac{1}{2000}$ (T/lb) x 2 (tanks)

$= 15.6$ T/yr

Working Losses

$K_n = 1.0$

$$L_W = 0.024 \times 130 \times 0.05 \times 1.0 \times 1.0\left(\frac{\text{lb}}{10^3 \text{ gals thruput}}\right) \times 156{,}472 \times 10^3 \left(\frac{\text{gals}}{\text{yr}}\right)$$

$= 24{,}410$ lbs/yr (Total for 2 tanks)

$= 12.2$ T/yr

Total Losses = $B + L_W$ = (15.6 + 12.2) T/yr

= 27.8 T/yr

- Tanks 60-62 (Total of 3 tanks)

Product: Ballastic water (assumed there was a layer of kerosene--middle oil--on top of water at all times).

Capacity/tank: $1{,}504 \times 10^3$ gallons

Throughput: $520{,}400 \times 10^3$ gallons/yr (Total for 3 tanks)

Turnovers/yr = N = 115.3

Data for kerosene are used for emission calculations.

P = 0.05 psia, D = 100 ft, H = 20 ft, $\Delta T = 16.1°F$, $F_p = 1.33$, C = 1.0, $K_c = 1.0$, M = 130 lb/lb mole

Breathing Losses

$$B = 0.000221 \times 130 \left(\frac{0.05}{14.7-0.05}\right)^{0.68} \times (100)^{1.73} \times (20)^{0.51} \times (16.1)^{0.5} \times 1.33 \times 1.0 \times 1.0$$

= 42.82 lbs/day per tank

$= 42.82 \text{ (lbs/day)} \times 365 \text{ (days/yr)} \frac{1}{2000} \text{ (T/lb)} \times 3 \text{ (tanks)}$

= 23.4 T/yr

Working Losses

K_n = 0.43 (from API Bulletin 2518, Figure 11, for N = 115.3)

or

$$K_n = \frac{180 + 115.3}{6 \times 115.3} = 0.427$$

$$L_w = 0.024 \times 130 \times 0.05 \times 0.43 \times 1.0 \left(\frac{\text{lb}}{10^3 \text{ gals thruput}}\right) \times 520{,}400 \times 10^3 \left(\frac{\text{gals}}{\text{yr}}\right)$$

= 34,908 lbs/yr

= 17.5 T/yr (Total for 3 tanks)

Total Losses = $B + L_w$ = (23.4 + 17.5) T/yr

= 40.9 T/yr

MISCELLANEOUS TANK FARM AND OFF-SITES

PUMP SERVICE	Reid Vapor Pressure	Hydrocarbons in lbs/day	
		Uncontrolled	Controlled
Tank Field Pumps			
Jet fuel pump	1.75	5	0.3
2 Gasoline pumps	7.0	10	5.4
#2 fuel oil pump	0.07	5	0
2 Crude oil pumps	3.5	10	0.6
Tank Pumps			
11 Crude oil pumps	3.5	55	3.3
12 Propane LPG pumps	26	133.2	133.2
4 Butane LPG pumps	26	44.4	44.4
4 Gasoline pumps	7	20	10.8
2 Jet fuel pumps	1.75	10	0.6
4 #2 fuel oil pumps	0.07	20	0.0
7 #5 fuel oil pumps	0.008	35	0.0
2 Naphtha pumps	1.75	10	0.6
2 light naphtha pumps	3.50	10	0.6
3 Gas oil pumps	1.75	15	0.9
3 Atmospheric residuum pumps	0.007	15	0.0
2 Refinery fuel oil pumps	0.008	10	0.0
2 Slop oil pumps	0.05	10	0.0
3 Ballast water pumps	1.75	15	0.9
TOTAL		432.6	201.6

- Uncontrolled Pump Seal Emissions

$$\frac{(432.6 \text{ pounds/day})(365 \text{ days/year})}{(2000 \text{ pounds/ton})} = \underline{\underline{78.95 \text{ tons/year}}}$$

- Controlled Pump Seal Emissions

$$\frac{(201.6 \text{ pounds/day})(365 \text{ days/year})}{(2000 \text{ pounds/ton})} = \underline{\underline{36.79 \text{ tons/year}}}$$

- Valves

(5 valves/tank)(62 tanks) = 310 valves associated with tanks.

Uncontrolled: use Radian emission factor.

$$\frac{(0.15 \text{ pounds/day-valve})(310 \text{ valves})(365 \text{ days/year})}{(2000 \text{ pounds/ton})} = \underline{\underline{8.49 \text{ tons/year}}}$$

Controlled Emissions

Negligible

END
DATE
FILMED
7-25-77
NTIS