United States
Environmental Protection
Agency

Office of Air Quality
Planning and Standards
Research Triangle Park NC 27711

EPA-450/3-79-022
October 1978

Air

EPA

# Evaluation of Benzene-Related Petroleum Processing Operations

EPA-450/3-79-022

# Evaluation of Benzene-Related Petroleum Processing Operations

by

Dr. Terry Briggs and Vijay P. Patel

PEDCo Environmental, Inc.
11499 Chester Road
Cincinnati, Ohio 45246

Contract No. 68-02-2603
Project No. 20

EPA Project Officer: Kent C. Hustvedt

Prepared for

U.S. ENVIRONMENTAL PROTECTION AGENCY
Office of Air, Noise, and Radiation
Office of Air Quality Planning and Standards
Research Triangle Park, North Carolina 27711

October 1978

This report is issued by the Environmental Protection Agency to report technical data of interest to a limited number of readers. Copies are available free of charge to Federal employees, current contractors and grantees, and nonprofit organizations - in limited quantities - from the Library Services Office (MD-35), U.S. Environmental Protection Agency, Research Triangle Park, North Carolina 27711; or for a nominal fee, from the National Technical Information Service, 5285 Port Royal Road, Springfield, Virginia 22161.

This report was furnished to the Environmental Protection Agency by PEDCo Environmental, Inc., 11499 Chester Road, Cincinnati, Ohio 45246, in fulfillment of Contract No. 68-02-2603. The contents of this report are reproduced herein as received from PEDCo Environmental, Inc. The opinions, findings, and conclusions expressed are those of the author and not necessarily those of the Environmental Protection Agency. Mention of company or product names is not to be considered as an endorsement by the Environmental Protection Agency.

Publication No. EPA-450/3-79-022

CONTENTS


| | Page |
|---|---|
| Figures | iv |
| Tables | iv |
| Acknowledgment | vi |
| 1. Introduction | 1 |
| 2. Survey of Benzene-related Petroleum Processing Operations | 2 |
| 2.1 Survey Results | 2 |
| 2.2 Generalized Process Descriptions | 7 |
| 3. Process Descriptions | 16 |
| 3.1 Glycol BTX Process | 16 |
| 3.2 Sulfolane Process | 24 |
| 3.3 Other Aromatic Solvent Extraction Processes | 29 |
| 3.4 Toluene Dealkylation Processes | 29 |
| 3.5 Toluene Disproportionation Processes | 36 |
| 4. Model Plant Development | 40 |
| Appendix | |
| A. Estimation of Benzene Emission From Receiver Vents | 50 |

## FIGURES


| No. | | Page |
|---|---|---|
| 2-1 | Refinery block flow diagram showing location of solvent extraction and toluene dealkylation units | 9 |
| 2-2 | Simplified process flow diagram of a sulfolane unit | 10 |
| 2-3 | Simplified process flow diagram of a glycol BTX unit | 12 |
| 2-4 | Simplified process flow diagram of BTX fractionation | 12 |
| 2-5 | Simplified process flow diagram of a toluene dealkylation unit | 14 |
| 3-1 | Flow diagram of a glycol BTX unit process | 19 |
| 3-2 | Sulfolane unit process flow diagram | 25 |
| 3-3 | Process flow diagram of a toluene hydrodealkylation unit | 31 |


## TABLES


| No. | | Page |
|---|---|---|
| 2-1 | Results of Survey of Refinery Benzene Processes | 3 |
| 2-2 | Analysis of Reformate Aromatics | 11 |
| 3-1 | Properties of Selected Solvents | 18 |
| 3-2 | Glycol BTX Unit Material Balance | 22 |
| 3-3 | Typical Operating Conditions of a Glycol BTX Unit | 23 |
| 3-4 | Sulfolane Unit Material Balance | 27 |

TABLES (continued)


| No. | | Page |
|---|---|---|
| 3-5 | Sulfolane Unit Operating Conditions | 28 |
| 3-6 | Toluene Dealkylation Unit Material Balance | 33 |
| 3-7 | Comparison of Toluene Dealkylation Yields Based on Different Feed Compositions | 34 |
| 3-8 | Toluene Dealkylation Unit Operating Conditions | 35 |
| 4-1 | Sulfolane Unit Pump Listing | 41 |
| 4-2 | Listing of Valves in Sulfolane Units | 42 |
| 4-3 | Relief Valves on Sulfolane Unit Listing | 42 |
| 4-4 | Sulfolane Unit Sample Connection Listing | 43 |
| 4-5 | Glycol BTX Unit Pump Listing | 44 |
| 4-6 | Glycol BTX Unit Valve Listing | 45 |
| 4-7 | Glycol BTX Unit Relief Valve Listing | 45 |
| 4-8 | Glycol BTX Unit Sample Connections Listing | 46 |
| 4-9 | Toluene Dealkylation Unit Pump Seal Listing | 46 |
| 4-10 | Toluene Dealkylation Unit Valve Listing | 47 |
| 4-11 | Toluene Dealkylation Unit Relief Valve Listing | 47 |
| 4-12 | Connection for Toluene Dealkylation Unit Sample Valve Listing | 48 |

ACKNOWLEDGMENT

This report was prepared by PEDCo Environmental, Inc., under the direction of Mr. Richard W. Gerstle. The PEDCo Project Manager was Dr. Terry Briggs. Dr. Briggs and Mr. Vijay P. Patel were the principal authors. Mr. Kent C. Hustvedt was the Project Officer for the Office of Air Quality Planning and Standards.

# SECTION 1

# INTRODUCTION

The classification of benzene as a hazardous air pollutant prompted an investigation by the Environmental Protection Agency (EPA) regarding the need for hazardous air pollutant standards under Section 112 of the Clean Air Act. This assessment of benzene emissions from petroleum-based operations that process liquids with high concentrations of benzene is part of this effort. The refinery processes included in the assessment are aromatics solvent extraction, toluene hydrodealkylation, toluene disproportionation, and benzene-toluene-xylene (BTX) fractionation.

Section 2 presents the results of a survey of all domestic petroleum-based producers of benzene and identifies the relevant processes and their capacities (when they are known). Section 3 describes all the major operations identified and presents typical operating characteristics and simplified material balances, focusing particular attention on the benzene concentration in each process flow stream. Section 4 identifies model plants for sulfolane, glycol BTX, and toluene deal kylation processes, and includes a listing of major equipment.

## SECTION 2

## SURVEY OF BENZENE-RELATED PETROLEUM PROCESSING OPERATIONS

All domestic petroleum refineries producing benzene were surveyed to collect information on benzene-producing processes. This information was needed to assure that all relevant processes would be identified and described in this report. These processes are also introduced with brief process descriptions.

### 2.1 SURVEY RESULTS

Table 2-1 presents the results of the survey of refinery chemical plants. It lists all the plants that process petroleum or petroleum fractions and produce benzene for sale or intermediate use. Whenever possible, data were obtained from the literature,[1,2] from EPA files, or through personal contact with EPA State and Regional officials. When no data were available, specific refineries were contacted directly. A few plants had still not responded as of the date of this report.

All but 5 of the 45 plants reported to have solvent extraction processes had glycol* or Sulfolane solvent processes. The remaining five had the Aromex process (one plant uses two units,

*The specific gylcol solvent is listed when known; otherwise the term UDEX is employed. Throughout the report the term glycol BTX process will be used to describe solvent extraction processes containing glycol solvents.

TABLE 2-1. RESULTS OF SURVEY OF REFINERY BENZENE PROCESSES

| State | Company | City | Solvent extraction | | TDA[a] | | Benzene produced, $10^3$ bbl/day | Comments |
|---|---|---|---|---|---|---|---|---|
| | | | Process | Throughput, $10^3$ bbl/day | Process | Throughput, $10^3$ bbl/day | | |
| California | Atlantic Richfield | Wilmington | TEG[c] solvent | | | | 0.78[d] | |
| | Chevron | El Segundo | Phenol | 4.0[c] | | | 1.5[c,d] | Phenol used in an azeotropic process |
| | Chevron | Richmond | UDEX[c] | 1.2[c] | | | | Produces a BTX mixture |
| Delaware | Getty | Delaware City | UDEX[c] | 8.1[e] | | | 0.75[c] | Vapor recovery at loading area and on tank vents |
| Illinois | Shell Oil | Wood River | Sulfolane[c] | 34[c] | | | 2.7[b] - 2.9[d] | |
| | Union Oil | Lemont | UDEX[c] | 11.4[c] | | | 1.1[d] | |
| Kansas | Skelly Oil (Getty) | El Dorado | UDEX[c] | 4.8[c] | | | 0.85[d] | |
| Kentucky | Ashland Oil | Ashland | Sulfolane[c] | 4.0[e] | HDA | 2.5[a] | 4.1[d] | Relief valves vented to flares |
| Louisiana | Cities Service | Lake Charles | Lurgi[c] | 12.0[c] | | | 1.5 - 1.6[c]<br>1.6[c] | Process vents to flares are monitoring benzene; N-methyl peribidone solvent used |
| | Exxon | Baton Rouge | UDEX[c] | 15[c] | | | 4.6[d] | |
| | Gulf Oil | Alliance | Sulfolane[c] | 11.1[e] | THD[c] | 5.4[e] | 4.6[d] | Closed drains and sump system |

(continued)

TABLE 2-1. (continued)

| State | Company | City | Solvent extraction | | TDA[a] | | Benzene produced, $10^3$ bbl/day | Comments |
|---|---|---|---|---|---|---|---|---|
| | | | Process | Throughput, $10^3$ bbl/day | Process | Throughput, $10^3$ bbl/day | | |
| Louisiana (continued) | Penzoil United (Atlas Refinery) | Shreveport | Phenol[c] | | | | 1.0[c] | Process vents to flare; premonitoring benzene |
| | Tenneco | Chalmette | Sulfolane[c] | 14[e] | | | 0.6[c]<br>0.65[c] | Monitor some personnel |
| | Union Carbide | Taft | TEG[c] | | | | 4.6[d] | |
| Michigan | Dow Chem. | Bay City | | | | | 1.96[d] | Solvent extraction process has been shut down[c] |
| Mississippi | Chevron | Pascagoula | Sulfolane[c] | 12[c] | | | | Does not produce benzene |
| New Jersey | Texaco | Westville | Sulfolane[c] | | | | 2.3[d] | |
| New York | Ashland Oil | North Tonawanda | Sulfolane[c] | 7.6[c] | | | 0.8[c]<br>1.54[d] | |
| Ohio | Sun Oil | Toledo | TEG[c] | 14.7[c] | HDA[c] | 4.2[c] | 1.6[d]<br>4.1[d] | Area monitor for both plants; closed sewer systems |
| Oklahoma | Sun Oil | Tulsa | UDEX[c] | 5.5[c] | Hydeal[c] | 0.95[c] | 1.6[d] | |
| Pennsylvania | Gulf Oil | Philadelphia | TEG[c] | 14.0[c] | THD[c] | 2.2[c] | 2.4[d] | |
| | Sohio (BP oil) | Marcus Hook | UDEX | | | | | Benzene process was shut down in 1976[c] |
| | Sun Oil | Marcus Hook | TEG[c] | 14.0[c] | TDP[c] | 3.6[c] | 1.96[d] | |

(continued)

TABLE 2-1. (continued)

| State | Company | City | Solvent extraction | | TDA[a] | | Benzene produced, $10^3$ bbl/day | Comments |
|---|---|---|---|---|---|---|---|---|
| | | | Process | Throughput, $10^3$ bbl/day | Process | Throughput, $10^3$ bbl/day | | |
| Puerto Rico | Commonwealth Oil | Ponce | Sulfolane[c] | 12.5[c] | | | 12.1[d] | |
| | Phillips | Guayama | | | HDA[c] | 7.2[c] | 7.2[d] | |
| Texas | American Retrofina (Cosden Oil) | Big Spring | Aromex[c] (Two units) | 5.0[c] | HDA[c] | 4.0[c] | 2.9[c] 3.6[d] | |
| | Amoco | Texas City | Sulfolane (Two units) | 48.8, 17.0[c] | | | 5.5[d] | |
| | Atlantic Richfield | Houston | Sulfolane[c] | 10.6[e] | Dispro-portiona-tion unit | | 3.3[d] | |
| | Champlin (Union Pacific) | Corpus Christi | UDEX and Sulfolane[c] | 8.0[c] | | | 0.6[d] | |
| | Charter Interna-tional | Houston | UDEX[c] | 2.2[c] | | | 0.3[d] | |
| | Crown Central Petroleum | Houston | UDEX[c] | | Detol[c] | | 0.65[d] | Detol has been down for over a year |
| | Coastal States | Corpus Christi | Sulfolane[c] | 3[c] | Hydeal[c] | 6.0[e] | 2[d] 4.6[d] (1978) | Vapor recovery system in opera-tion |
| | Dow Chem. | Freeport | | | | | 3.3[d] | No information |
| | Exxon | Baytown | Sulfolane[c] | 50.0[c] | | | 3.9[d] | |
| | Gulf Oil | Port Arthur | TEG[c] | 24.0[c] | | | 4.5[c] | THD unit to start up 4th quarter of 1979 |

(continued)

TABLE 2-1 (continued)

| State | Company | City | Solvent extraction | | TDA[a] | | Benzene produced, $10^3$ bbl/day | Comments |
|---|---|---|---|---|---|---|---|---|
| | | | Process | Throughput, $10^3$ bbl/day | Process | Throughput, $10^3$ bbl/day | | |
| Texas | Howell | San Antonio | Arosorb | 0.75[c] | | | | Does not produce pure benzene |
| | Independent Refining | Winnie | UDEX[c] | 0.4[e] | | | 0.20 | |
| | Marathon Oil | Texas City | UDEX[c] | 6.3[c] | | | 0.55[d]<br>0.39[d] (1978) | |
| | Mobil | Beaumont | | | | | 3.9[d] | No information |
| | Monsanto | Chocolate Bayou | UDEX[c] | 7.9[c] | HDA[c] | | 5.5[c,d] | Most benzene production is from pyrolysis gasoline[b] |
| | Phillips | Sweeney | TEG[c] | 7.2[c] | | | 1.4[d] - 0.65[d] (1978) | |
| | Quintana Howell | Corpus Christi | Sulfolane[c] | 10.5[c] | HDA[c] | 8.1[e] | 0.8[d] - 5.87[d] (1978) | |
| | Shell Oil | Deer Park | Sulfolane[c] | 16.0[e] | | | 5.87[d] | |
| | Shell Oil | Odessa | UDEX[c] | 0.8[c] | Hydeal[c] | 0.8[d] | | |
| | South-western | Corpus Christi | Sulfolane | 1.1 | | | | |
| | Sun Oil | Corpus Christi | UDEX[c] | 11.0[c] | Hydeal[c] | 1.8[c] | 1.8[d]<br>2.3[c] (1978) | |
| | Texaco | Port Arthur | UDEX[c] | 5.4[c] | | | 2.93[d] | No information |
| | Union Oil Amer. Petrofina | Beaumont | UDEX[c] | | | | 1.4[d] | Flare off-gases |
| | Americal Petrofina | Port Arthur | | | HDA[c] | 1.04[c] | 1.3[d]<br>0.8[c] | |
| Virgin Islands | Amerada Hess | St. Croix | Sulfolane[c] (Two units) | 50.0[c] | | | 4.24[d] | |

[a] TDA = Toluene Dealkylation.

[b] Where specific glycol solvent is known, it is presented; otherwise, glycol BTX process is designated as UDEX.

[c] Data from telephone or written conversation with EPA Regional officials, EPA state officials, or direct plant contacts.

[d] SRI Chemical Directory 1978.

[e] Data taken from The Oil and Gas Journal Annual Refining Survey, March 20, 1978.

two use a solvent extraction process using phenol with an azeotropic separation, one uses the Arosorb process, and the remaining plant uses the Lurgi process, which uses n-methyl peribidone as the solvent. Feed rates were reported for 17 of 18 Sulfolane units and 18 of 23 glycol BTX units. Based on these data the mean Sulfolane unit feed rate is 2576 $m^3$/day (16,200 barrels/day) and the median rate is 1908 $m^3$/day (12,000 barrels/day). The corresponding glycol BTX unit mean is 1522 $m^3$/day (9300 barrels/day) and the median is 1244 $m^3$/day (7600 barrels/day). Of the units with a feed rate greater than 2455 $m^3$/day (15,000 barrels/day), five used the Sulfolane process and one used glycol BTX.

Although fewer plants use toluene dealkylation units, the variety of processes was greater. As shown in Table 2-1, 14 plants have toluene dealkylation units and two plants have a toluene disproportionation process. Plants having toluene dealkylation units reported the following processes: Hydeal, Detol, Hydrodealkylation (HDA), and Thermal Hydrodealkylation (THD). Based on the 12 plants that reported the feed rates of their toluene dealkylation process, the mean feed rate is 573 $m^3$/day (3500 barrels/day) and the median feed rate is 540 $m^3$/day (3300 barrels/day).

## 2.2 GENERALIZED PROCESS DESCRIPTIONS

The operating processes of interest are solvent extraction, toluene dealkylation, and toluene disproportionation. These processes are briefly introduced in this section, primarily to describe how they fit into the overall refinery processing

picture. Figure 2-1 presents a block flow diagram of an integrated modern petroleum refinery. As the figure indicates, feed to the solvent extraction (shown as BTX extraction) unit is in the gasoline-blending-stock boiling range (60 to 204°C or 140° to 400°F). Feed is normally prefractionated to remove low- and high-boiling-range components.

### 2.2.1 Solvent Extraction

Solvent extraction selectively separates aromatics from the remaining paraffins in the hydrocarbon feed stream. The high-purity aromatics are then fractionated to produce individual aromatic products. Reformate, the major solvent extraction feedstock, is formed by the catalytic reforming of the naphtha-boiling-range hydrocarbons (93° to 190°C or 200° to 375°F) from crude oil. Reforming provides the refiner with the flexibility to meet motor fuel and aromatics production needs. Operating conditions can be varied over relatively narrow limits so that increased severity of catalyst operating conditions reduces yield while increasing the reformate octane number. This is usually accomplished by simultaneously increasing aromatic yield and decreasing the concentration of heavy paraffins. The typical aromatics concentration in high-octane reformates is 45 to 70 volume percent.[4] While severity adjustments account for a portion of this variation, the chemical composition of the naphtha feed is the major factor affecting aromatics content. Table 2-2 presents a breakdown of the aromatics in different reformates. The high-octane blending values shown for these aromatics

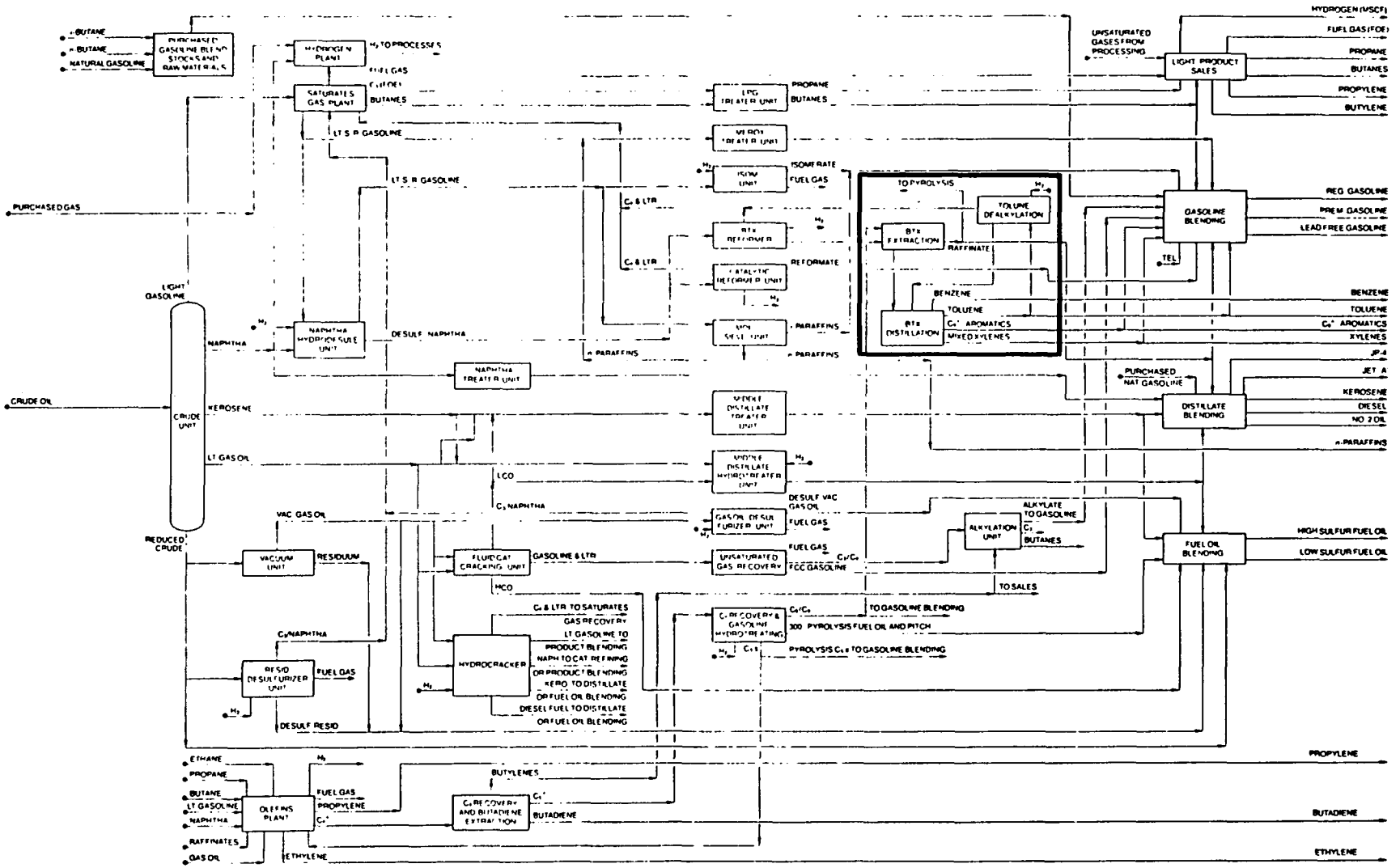


Figure 2-1. Refinery block flow diagram showing location of solvent extraction and toluene dealkylation units.[3]

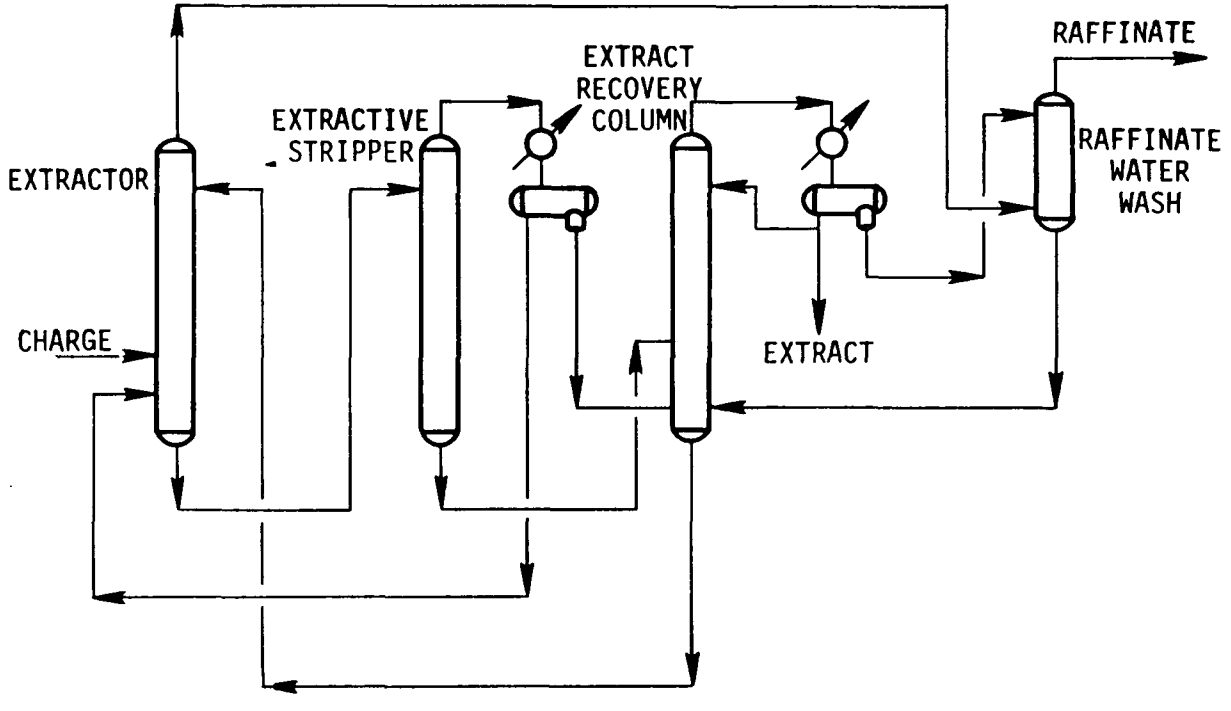


Figure 2-2. Simplified process flow diagram of a Sulfolane unit.[6]

indicate their value in raising the octane ratings of a motor gasoline pool. Other feed streams to solvent extraction units are pyrolysis gasoline (primarily from ethylene plants) and other refinery hydrocarbon streams containing light aromatics.

Solvent extraction feed is normally prefractionated to remove light ends ($C_5^-$ hydrocarbons) and also heavy ends ($C_9^+$ hydrocarbons). Some plants also remove $C_7$ and/or $C_8$ hydrocarbons, resulting in a $C_6$ or $C_6$-$C_7$ feed stream for benzene and toluene production only.

Table 2-2. ANALYSIS OF REFORMATE AROMATICS

| Source | Volume % of reformate | | | Octane blending values[4] | |
|---|---|---|---|---|---|
| | A[4] | B[5] | C[6] | 0 g Pb | 3 g Pb |
| Benzene | 5 | 3.5 | 2.2 | 108 | 112 |
| Toluene | 24 | 13.9 | 17.3 | 112 | 115 |
| Ethylbenzene | 4 | 3.6 | 7 | 113 | 116 |
| P-xylene | 4 | 4.5 | | 114 | 115 |
| M-xylene | 9 | 10.1 | 28.6 | 114 | 116 |
| O-xylene | 5 | 5.2 | | 100 | 96 |
| $C_9^+$ aromatics | 4 | 31.4 | 18.8 | 103 | 107 |

Figure 2-2 presents a simplified flow diagram of a Sulfolane unit handling a reformate charge, and Figure 2-3 shows a similar diagram for a glycol BTX unit. Extract refers to the aromatics stream, and the raffinate refers to the remaining paraffin stream separated from the reformate. After it is treated, raffinate is normally used for gasoline blending or olefin plant feedstock. As shown in Figure 2-4, the extract from glycol BTX or sulfolane units is fractionated into individual components.

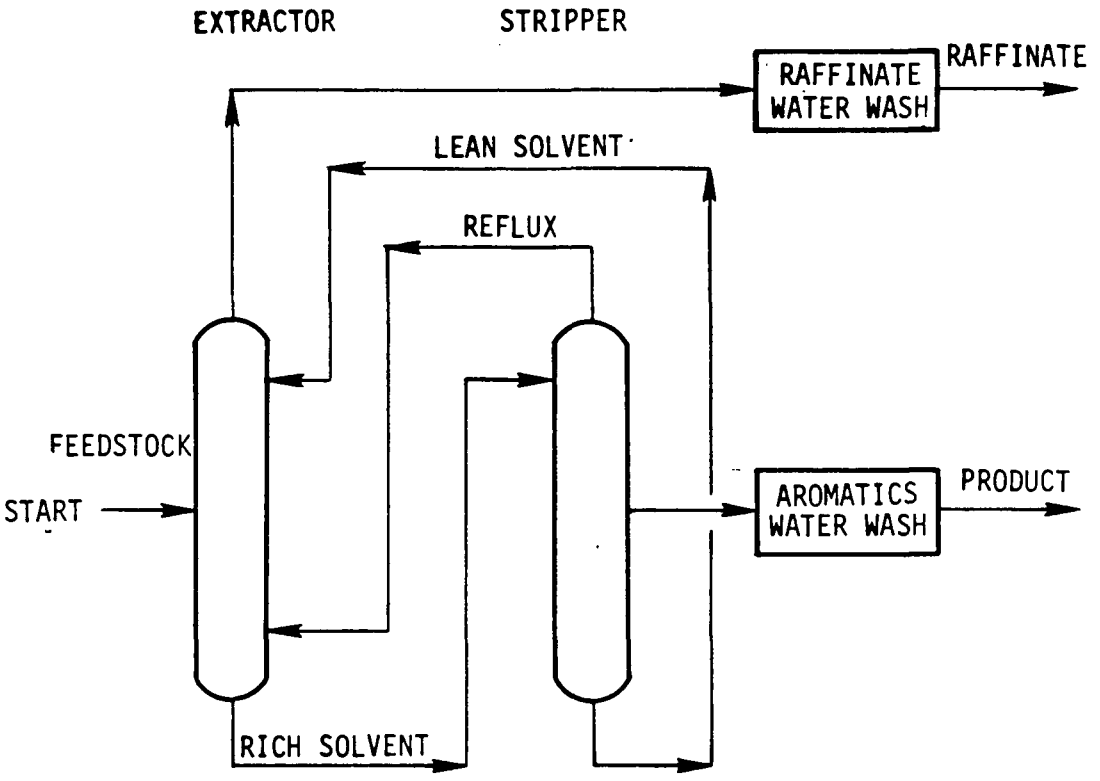


Figure 2-3. Simplified process flow diagram of a glycol BTX unit.[6]

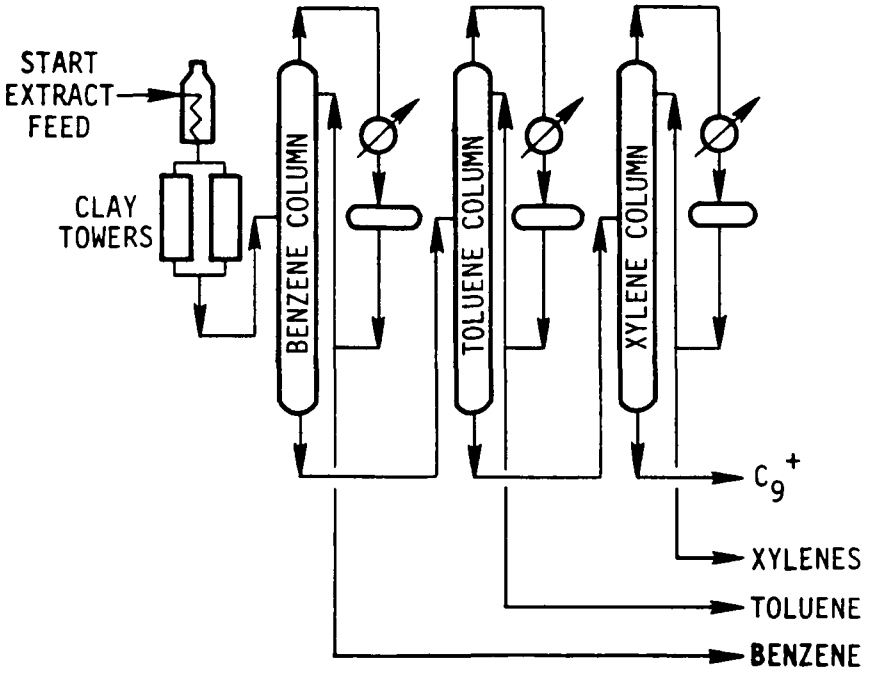


Figure 2-4. Simplified process flow diagram of BTX fractionation.[4]

### 2.2.2 Toluene Dealkylation

Toluene dealkylation processes are used to increase benzene production by the conversion of toluene to benzene. The attractiveness of this process depends on the price difference between benzene and toluene. Because this price differential fluctuates, the process is sometimes operated on an intermittent basis. Process feed toluene normally comes from a solvent extraction unit or is purchased. The feed stream is normally either pure toluene or a toluene-rich hydrocarbon.

Figure 2-5 presents a simplified process flow diagram of a Hydeal unit. The process flow of other toluene dealkylation units is similar. These cracking processes use heat and a hydrogen atmosphere to convert toluene and other higher aromatics to benzene and methane. Some processes use a fixed-bed catalyst; the rest are thermal processes. Unreacted toluene in the reactor effluent is recycled back to the feed after fractionation.

Although at least three toluene disproportionation processes are available, only one unit was reported to be in operation in the United States. The process flow of these processes is similar to toluene dealkylation; however, these catalyzed processes convert toluene to benzene and xylenes. The yield ratio of benzene to xylene is variable.[4]

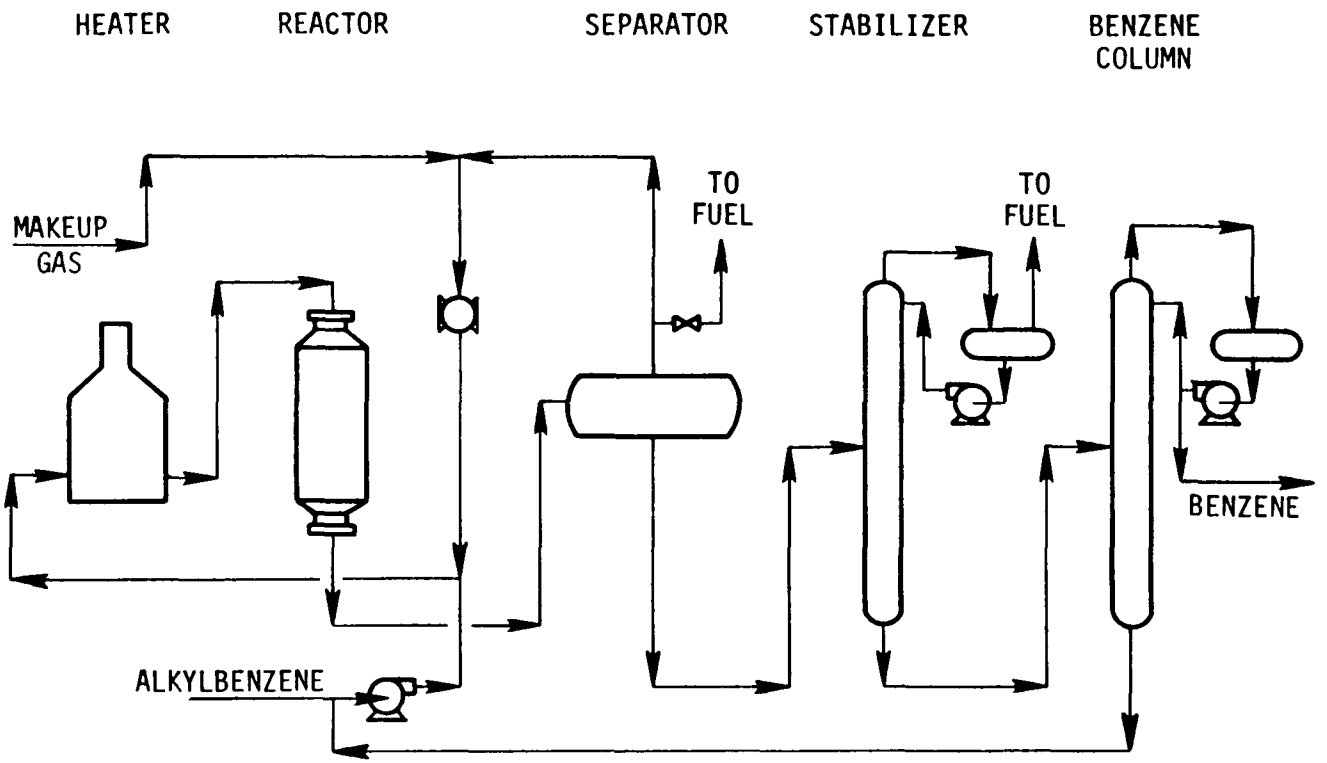


Figure 2-5. Simplified process flow diagram of a toluene dealkylation unit (Hydeal unit shown).[7]

## REFERENCES FOR SECTION 2


1. Ailleen Cantrell. Annual Refining Survey. The Oil and Gas Journal, Vol. 76, March 20, 1978. pp. 108-140.

2. Stanford Research Institute Directory of Chemical Producers. Menlo Park, California, 1978.

3. Maclean, W.D. Construction site selection - A U.S. viewpoint. Hydrocarbon Processing, June 1977. pp. 111-116.

4. Mager, E.M. Aromatics Production. In: U.S. Petrochemicals, A.M. Brownstein, ed., Petroleum Publishing Co., Tulsa, Oklahoma, 1972.

5. Pollitzer, E.L., J.C. Hayes, and V. Haensel. The Chemistry of Aromatics Production via Catalytic Reforming in Refining Petroleum for Chemicals. In: America Chemical Soc. Advances in Chemistry, L.J. Spillane and H.P. Lefton, eds, Series 97, Washington, D.C., 1970.

6. Refining Handbook. Hydrocarbon Processing, 55(9), September 1976. pp. 216-217.

7. Refining Handbook. Hydrocarbon Process, 47(9), September 1968. p. 189.

# SECTION 3

# PROCESS DESCRIPTIONS

This section presents detailed process descriptions of solvent extraction, toluene dealkylation, and BTX fractionation, and identifies potential atmospheric emission sources. It also serves as a basis for the information on atmospheric emissions presented in Sections 4, 5, and 6. The Sulfolane, glycol BTX, and toluene dealkylation processes are addressed separately. The fractionation associated with each process is included in each process description.

## 3.1 GLYCOL BTX PROCESS

Glycol BTX processes rely on the greater solubility of aromatic hydrocarbons in a glycol solvent compared with that of the paraffinic components of a feed stream. Several glycol solutions have been used in these processes, including a solution of diethylene glycol and water, diethylene and dipropylene glycols, and water and tetraethylene glycol (TEG). The tendency in the refining and chemical industry is to use higher-molecular-weight glycols to increase the benzene-producing capacity and simultaneously recovering more of the higher-molecular-weight hydrocarbons and reducing operating costs.[1,2] Glycol solvent systems can be changed by minor equipment modifications that involve no change in royalty status; therefore it is not uncommon

for refineries and chemical plants to switch solvents.[2] This report is restricted to a glycol BTX unit using TEG solvent because TEG is commonly used by refiners and because it is the solvent used at all four refineries with glycol BTX units visited by PEDCo in conjunction with this project. Although plant operation is similar when different solvents are used, flow ratios vary. (See Table 3-1.) Table 3-1 also shows solvent properties, including those for Sulfolane.

The glycol BTX unit feed stream is normally reformate; however with proper feed treatment, other refinery feed streams containing aromatics can be used. Reformate used for aromatic extraction is normally prefractionated to give a $C_6$-$C_8$ fraction for BTX production or a $C_6$-$C_7$ fraction when only benzene and toluene are recovered. To obtain these "heart-cut" reformate fractions, reformate is first depentanized to remove $C_5^-$ paraffins, then a second fractionator removes hydrocarbons with higher boiling points.

Figure 3-1 presents a process flow diagram of a typical glycol BTX unit using a TEG solvent. The drawing has been simplified, particularly with regard to the heat exchangers and control loops on control valves. Aromatics are separated from the feed by the solvent in the trayed rotating disc extractor or sieve tray extractor by the liquid-liquid solvent extraction method. Aromatics-free raffinate leaves the top of the extractor, while the solvent containing dissolved aromatics (rich solvent) leaves the bottom. The light hydrocarbon reflux strips paraffins from the rich solvent. The rich solvent goes to the stripper,

TABLE 3-1. PROPERTIES OF SELECTED SOLVENTS[2]

| Solvent name | Diglycolamine | Diethylene glycol | Depropylene glycol | TEG | Sulfolane |
|---|---|---|---|---|---|
| Molecular weight | 105 | 106 | 134 | 194 | 120 |
| Specific gravity 20/20°C | 1.06 | 1.12 | 1.02 | 1.13 | 1.27 |
| Normal boiling point, °C (°F) | 221(430) | 246 (474) | 231 (448) | Decomp. | Decomp. |
| Freeze point, °C (°F) | -9.4 (15) | -7.8 (18) | Super cools | -3.9 (25) | |
| Viscosity, cst at 50°C | 8 | 10 | 10 | | 5 |
| cst at 20°C | 30 | 32 | 90 | 55 | |
| Flash point, open cup °C (°F) | 127 (260) | 143 (290) | 127 (260) | 182 (360) | |
| Specific heat at 300°F, Btu/lb | | | | | |
| Pure solvent | 0.68 | 0.65 | 0.58 | 0.52 | 0.43 |
| Solvent + 10% water | 0.72 | 0.71 | | | |
| Latent heat or vaporization (Btu/lb) J/g | 510 (220) | 557 (240) | | | |
| Extraction temperature, °C (°F) | 121-149 (250-300) | 132-154 (270-310) | | 132-154(270-310) | 93 (200) |
| Recovery column bottom | | | | | |
| Temperature, °C (°F) | 149-177(300-350) | 149-154 (300-310) | | 149-154(300-310) | 177 (350) |
| Pressure, psig (mmHg) | 6 | 6 | | 6 | (500) |
| Water, wt. % | 3-10 | 8-10 | | 5-10 | 0.5 |
| Solvent/feed vol. ratios | 3-4 | 6-8 | | 4-5 | 2-3.5 |
| Reflux/feed vol. ratios | 0.6-0.9 | 1.0-1.4 | | 0.7-1.0 | 0.5 |
| Price, $/kg ($/lb) | 0.605(0.275) | 0.209(0.095) | | 0.363(0.165) | 1.38(0.63) |

Note: Some of these properties and data are rough estimates.

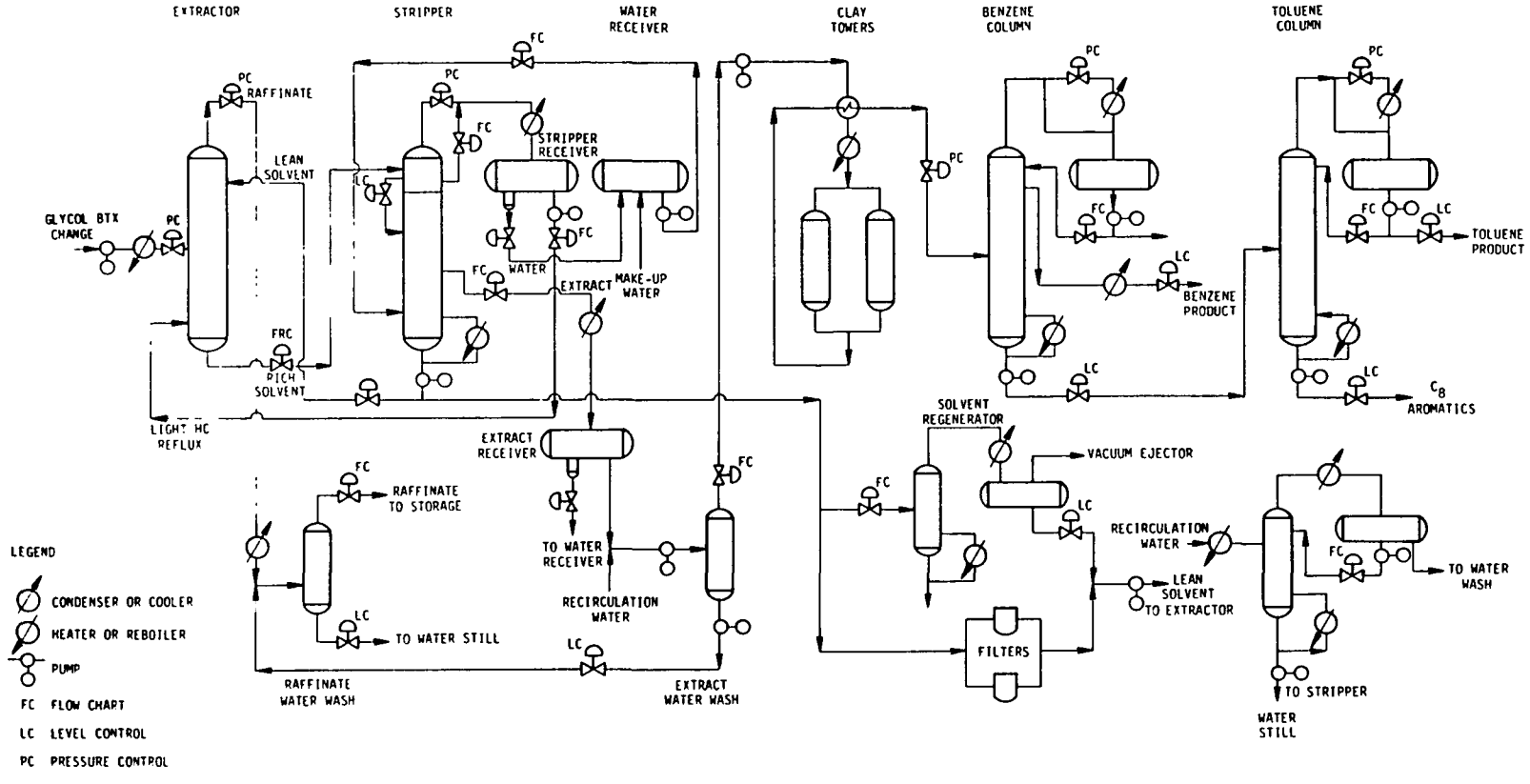


Figure 3-1. Flow diagram of a glycol BTX unit process.[3,4,5]

where the extract is steam-stripped from solvent and light ends. A significant amount of extract purification (nonaromatics separation) also takes place in the stripper.[7] The stripper feed goes through a two-stage flash to remove the light ends and water, which go to the stripper receiver. The stripper separates hydrocarbons from the solvent and strips nonaromatics from the extract. The extract is removed as a side-cut, and the lean solvent is the bottom fraction. Both the extract and raffinate are water-washed to remove any dissolved solvent before they go to fractionation and gasoline blending. After the extract is heated, it flows through a clay tower that removes any olefins present. The pure benzene, toluene, and xylenes are separated by conventional fractionation. Benzene is sometimes drawn off as a side-cut near the top of the benzene column to remove paraffinic and water impurities. The toluene product normally contains considerably less than 1 percent benzene.

The solvent regenerator and solvent filters, which remove liquid and solid impurities (primarily due to solvent degradation) in the solvent, are operated on an intermittent basis and/or as a small slip stream.[4,5,6] Some plants have replaced the solvent regenerator with a charcoal filter bed.[5,8] The water still, which removes solvent from the recirculation water, can also be operated on an intermittent basis.[4,6]

Table 3-2 presents a simplified materials balance for a glycol BTX unit (based on a $C_6$-$C_7$ feed).* Table 3-3 gives the operating conditions of some of the major process streams.

### 3.1.1 Glycol BTX Unit Emission Sources

Benzene and total hydrocarbon emission sources in glycol BTX units (as well as Sulfolane and toluene dealkylation units) can be classified into two groups: process vents and fugitive emissions. Categories of potential onsite fugitive emissions that are common to each process are control, process, and relief valve leaks; pump seal leaks; sampling connections; wastewater sump; and flange leaks. Although some glycol BTX units do not vent receivers to the atmosphere,[4,5] others vent certain ones, notably the stripper overhead receiver and benzene column receiver. In some instances extract and toluene column receivers are also vented to the atmosphere. A natural gas sweep is commonly used on the process receivers to keep their pressure from going negative.

No data are available on emission rates. Estimates are shown in Appendix A. Vent rates depend on receiver liquid composition, gas-sweep rate and composition, and receiver pressure. Because most volatile fractions in the feed ($C_5$'s) that dissolve in the solvent go to the stripper overhead receiver, its vent would have the highest off-gas rate. These atmospheric emissions can be eliminated by reducing $C_5$'s in the feed and routing these

---

* The material balances presented in Section 3 (for glycol BTX, Sulfolane, and toluene dealkylation units) do not represent operating conditions in any specific unit. Engineering judgement was used where data were lacking.

TABLE 3-2. GLYCOL BTX UNIT MATERIAL BALANCE[2,4,5,6,7]

(Basis 7500 bbl/day feed)

| | Flow Rate | | Composition, wt % | | | | | | |
|---|---|---|---|---|---|---|---|---|---|
| | $m^3/d$ | (bbl/day) | Benz | Tol | Xyl | $C_9$Arom | Paraf | Solv | $H_2O$ |
| Extractor - Feed | 1193 | (7,500) | 14.0 | 17.0 | 2.0 | 0.1 | 67.0 | | |
| - Lean solvent | 4771 | (30,000) | | | | | | 90.0 | 10.0 |
| - Rich solvent | 5144 | (32,350) | 3.2 | 3.8 | 0.5 | | | 92.5 | |
| - Raffinate | 819 | (5,150) | 0.5 | 1.0 | | | 97.5 | 1.0 | |
| - Light HC reflux | 1193 | (7,500) | 45.0 | 30.0 | | | 25.0 | | |
| Stripper-Extract to benzene column | 382 | (2,400) | 42.7 | 51.1 | 6.2 | | | | |
| Benzene product | 163 | (1,025) | 99.9 | 0.1 | | | | | |
| Toluene column feed | 219 | (1,375) | 0.1 | 99.0 | | | | | |
| Toluene product | 195 | (1,225) | 0.1 | 99.9 | | | | | |
| Toluene column bottoms | 24 | (150) | | 0.5 | 98.0 | 1.5 | | | |

TABLE 3-3. TYPICAL OPERATING CONDITIONS OF A GLYCOL BTX UNIT[4,5,6,7]

| | Temperature, °C (°F) | Pressure, kPa (psig) |
|---|---|---|
| Extractor - top | 135-149 (275-300) | 689-827 (100-120) |
| Stripper - top flash drum | | 172-345 (25-50) |
| Stripper - second flash drum | | 34-69 (5-10) |
| Stripper receiver, extract receiver | 38 (100) | 3.4 (0.5) |
| Benzenes toluene column receivers | 38 (100) | 3.4 (0.5) |
| Solvent regenerator receiver | 38 (100) | 68.9 (~10) |

vents to flare headers or using hot-vapor bypass or comparable pressure-control systems.

## 3.2 SULFOLANE PROCESS

The Sulfolane process, a more recent development than the glycol BTX unit, has come into common use because the solvent properties of Sulfolane are superior to any of the glycols.[2] As shown in Table 2-1, all but one of the solvent extraction units with a feed capacity greater than 15,000 barrels/day use the Sulfolane process. Major factors preventing refineries from switching to Sulfolane on existing glycol BTX units are the major equipment changes and high royalty rates involved.[2] Tetrahydrothiophene dioxide (the solvent used in the Sulfolane process) is highly polar, permitting reduced solvent-to-feed ratios in the extractor while increasing the total recovery of xylenes and heavy aromatics.[9]

Feed sources and preparation for Sulfolane units are similar to glycol BTX units. Sulfolane feed is normally $C_6$-$C_8$ or $C_6$-$C_9^+$, whereas the process feed to glycol BTX units often consists only of $C_6$-$C_7$ fractions.

A flow diagram of a Sulfolane unit (Figure 3-2) shows that the process flow is similar to that of a glycol BTX unit; however, unlike the glycol BTX processes (which separate the rich solvent in one distillation step in the stripper) the Sulfolane unit requires two steps. First, rich solvent from the extractor enters the extractive stripper, where partial stripping of the hydrocarbon takes place. In this column light hydrocarbons,

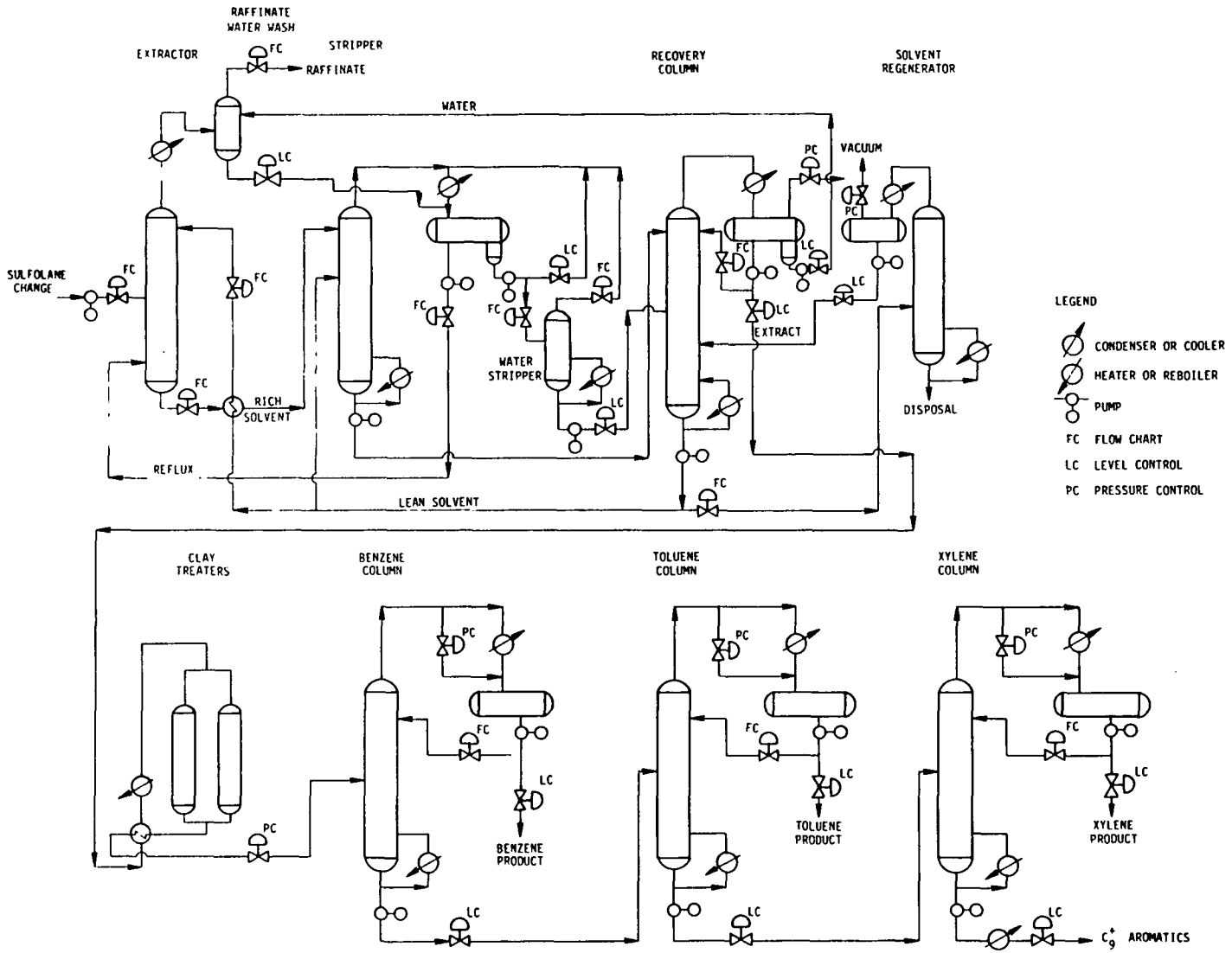


Figure 3-2. Sulfolane unit process flow diagram.[10,11]

including some benzene, are removed overhead and recycled to the extractor. The extractive stripper bottoms, consisting of solvent, aromatics, and a few nonaromatics, enter the extract recovery column, which is operated under vacuum. Here the extract is separated from the solvent, which is recycled to the extractor as lean solvent. Solvent cleanup is accomplished by sending a small slip stream of lean solvent to a solvent regenerator and filters for removal of solvent degradation products. The solvent regenerator is usually operated under a vacuum, and steam jet ejectors are normally used to maintain a vacuum in the two vacuum columns.

Some variations in the water circulation loops occur among Sulfolane units.[10,11] Raffinate from the extractor is contacted with water to remove dissolved Sulfolane, and the resulting rich water is either returned to the extract recovery column or to a water stripper to reclaim the Sulfolane content.

The fractionation section of the Sulfolane unit, which is preceded by clay treaters to remove olefins, is similar to a glycol BTX unit.

Table 3-4 presents the material balance for a typical Sulfolane unit, based on 2455 $m^3$/day (15,000 bbl/day). Table 3-5 presents operating conditions of selected process streams.

### 3.2.1 Sulfolane Unit Emission Sources

Most emission sources in Sulfolane units are similar to those in glycol BTX units. Other potential sources are the vacuum system on the recovery columns and solvent regenerators

TABLE 3-4. SULFOLANE UNIT MATERIAL BALANCE[2,10,11]

[Based on feed of 2385 $m^3$/day (15,000 bbl/day)]

| | Flow Rate | | Composition, wt % | | | | | |
|---|---|---|---|---|---|---|---|---|
| | $m^3$/day | (bbl/day) | Benz | Tol | Xyl | $C_9$-A | Paraf | Solv |
| Extractor - feed | 2385 | (15,000) | 8.5 | 30.0 | 15.0 | 2.5 | 44.0 | |
| - Lean solvent | 4771 | (30,000) | | | | | | 100 |
| - Rich solvent | 6118 | (38,470) | 3.3 | 13.3 | | | 0.2 | 80 |
| - Raffinate | 1059 | (6,660) | | | | | 98.0 | 2.0 |
| - Light HC reflux | 954 | (6,000) | 15.0 | 25.0 | | | 60.0 | |
| Extractive stripper bottom - Extract | 1347 | (8,470) | 15.0 | 53.2 | 26.6 | 4.4 | 0.8 | |
| Solvent Regenerator Feed | 31.8 | (200) | | | | | | 99.0 |
| Wash water from raffinate wash | 318 | (2,000) | | | | | 99.0 | 1.0 |
| Benzene Product | 200 | (1,255) | 100.0 | | | | | |
| Toluene column feed | 1126 | (7,055) | 0.3 | 63.1 | 31.1 | 4.7 | 0.8 | |
| Toluene product | 712 | (4,480) | 0.5 | 99.0 | | | 0.5 | |
| Xylene column feed | 410 | (2,575) | | 0.7 | 85.0 | 13.0 | 1.3 | |
| Xylene product | 355 | (2,230) | | 0.8 | 97.0 | 1.1 | 1.1 | |
| Xylene column bottoms | 55 | (345) | | | 7.0 | 90.0 | 3.0 | |

TABLE 3-5. SULFOLANE UNIT OPERATING CONDITIONS[2,10,11]

| | Temperature °C (°F) | Pressure Kpa-gauge psig |
|---|---|---|
| Raffinate | 93 (200) | 276-345 (40-50) |
| Extractive stripper-top | 127-135(260-275) | 34.5-48.3 (5-7) |
| Recovery column-top | | -75.8 (-11) |
| Recovery column-bottoms | 177 (350) | |
| Water stripper (if used) | 110-121(230-250) | 55.1 (8-20) |
| Solvent regenerator-top | 166 (330) | -96.5 (-14) |

that can be vented to the atmosphere. Process receivers could be vented to the atmosphere; however, no available information indicates that this is done.

## 3.3 OTHER AROMATIC SOLVENT EXTRACTION PROCESSES

Other solvent extraction processes have been commercially developed, but not as many of these have been installed. The configurations of such processes, Formex (which uses n-formglmorpholine as the solvent) and Aromex (which uses diglycolamine) are very similar to glycol BTX and Sulfolane processes.[2,12] As shown in Table 3-1, the solvent properties of diglycolamine are similar to other commonly used solvents. Therefore, the emission characteristics of the Aromex process are likely to be similar to those from glycol BTX and Sulfolane units.

## 3.4 TOLUENE DEALKYLATION PROCESSES

Naphtha reformers yield two to three times more toluene than benzene; however, because the demand for benzene continues to be substantially greater than that for toluene, some refiners have installed toluene dealkylation units to convert toluene to benzene.[9] For this process to be feasible, the price differential between benzene and toluene must be large. The generally low price differential over the past 15 years has caused some refiners to shut these units down or to run them on an intermittent basis.[9]

There are a number of commercially available toluene dealkylation processes, all of which have similar process flow

configurations. The processes can be divided into two groups, thermal and catalytic. The survey results (shown on Table 2-1) identified four processes in domestic operation:

1. Hydeal - catalytic process licensed by UOP
2. Detol - catalytic process licensed by Houdry
3. HDA - thermal process licensed by Atlantic Richfield and HRI
4. THD - thermal process licensed by Gulf Oil

Other commercialized processes are Shell's Bextol process (catalytic) and Mitsubishi's MHC process (thermal). Pure toluene or toluene mixed with other aromatics and paraffins can be used. The reactions take place in a hydrogen atmosphere at 540° to 760°C (1000° to 1400°F) and 3445 to 4820 kPa (500 to 700 psig). The catalytic processes typically operate at 200° to 300°F lower temperature, but they are more sensitive to coke laydown.[9] Toluene conversion per pass is 70 to 80 percent, and the overall yield is about 97 percent of theoretical. The major reactions are the dealkylation of alkylbenzenes to benzene and cracking of essentially all nonaromatics to methane and ethane.[13]

Figure 3-3 presents the process flow diagram of a typical toluene dealkylation unit. Because the dealkylation reaction is highly exothermic, cold hydrogen is used in some designs as a quench for temperature control in the reactor system.[9] The reported overall mole ratio range of hydrogen-to-feed is 3:1 to 8:1.[4,5,9] Recycle hydrogen purity is maintained above 50 mol percent to minimize coking and for economic reasons.[13] Among the various configurations used to maintain recycle gas hydrogen

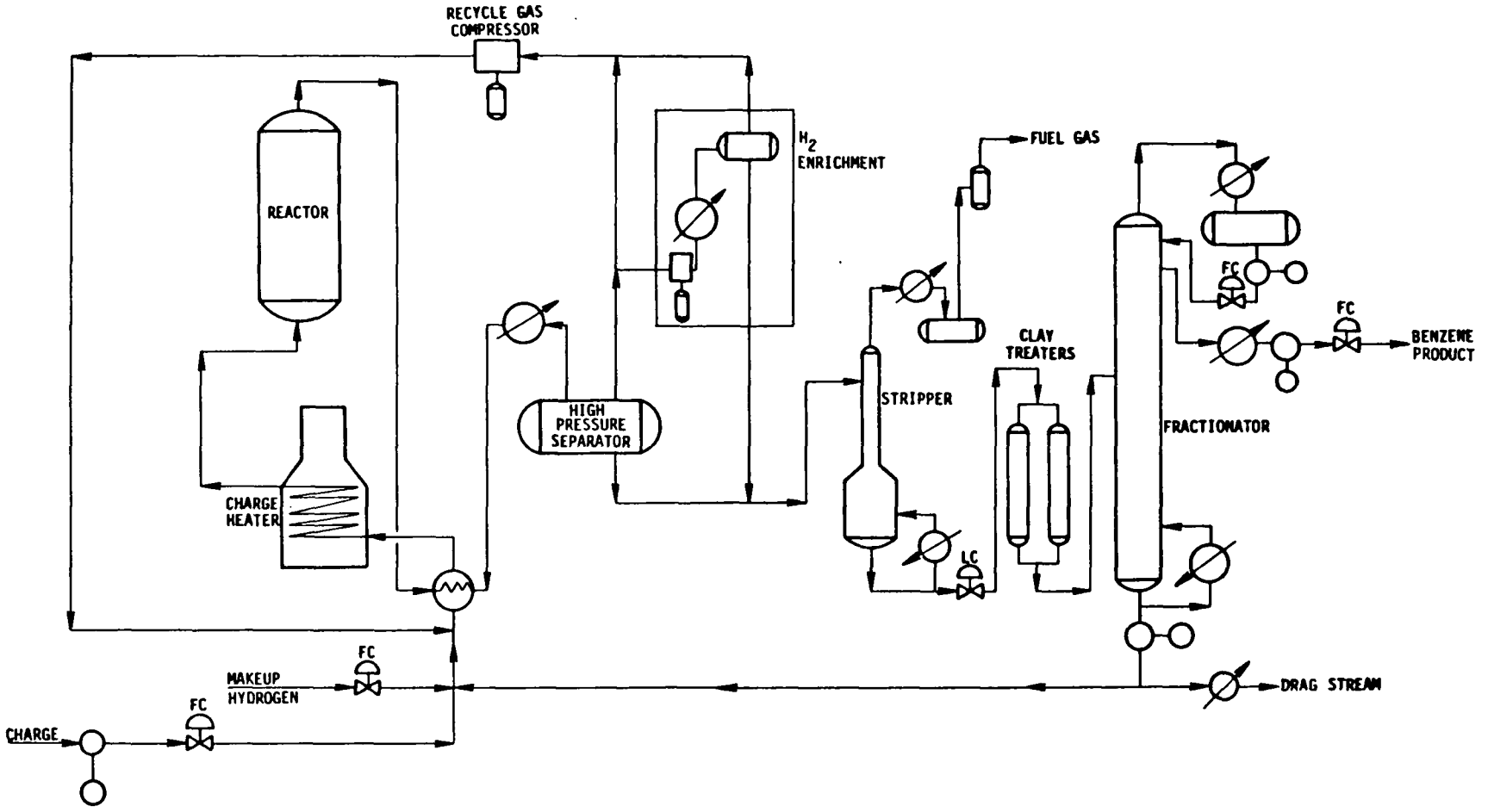


Figure 3-3. Process flow diagram of a toluene hydrodealkylation unit.[4,5,14,15]

purity above a minimum level are purification of makeup gas, which is normally reformer hydrogen; adding hydrogen from a hydrogen unit; and purification of recycle gas. Purification is normally accomplished by compression, cooling, and absorption or with a cryogenics unit. A condensate rich in benzene is recovered by these processes. Other process variations are the use of a low-pressure (LP) separator after the high-pressure (HP) separator to flash off a methane-rich gas,[5,16] the recycling of a light liquid stream from the stripper overhead receiver,[5] and the use of a recycle column after the fractionator (or benzene column) to separate toluene overhead for recycle from a bottoms drag stream.

Table 3-6 presents the material balance of a toluene dealkylation unit based on 2500 barrels/day of toluene feed. The amount of toluene recycle is dependent upon process economics. Table 3-7 compares the yields of different feed compositions. A pure toluene feed results in the lowest process flow rate per unit of benzene produced. Net gas rates are noticeably lower. Table 3-8 shows typical unit operating conditions.

### 3.4.1 Toluene Dealkylation Unit Emission Sources

Potential benzene and hydrocarbon emission sources are the fractionator receiver vents and the same general leak sources as listed for glycol BTX units (in Section 3.1.1). The fired-charge heater, which uses fuel gas or fuel oil, is a source of hydrocarbon emissions. The recycle gas compressor seals are also potential sources of benzene and hydrocarbon leaks. The

TABLE 3-6. TOLUENE DEALKYLATION UNIT MATERIAL BALANCE[4,5,11,13,14,15,16,17]

| | Flow Rate | | Composition, % | | | | | |
|---|---|---|---|---|---|---|---|---|
| | $m^3$/day | (bbl/day) | Basis | Benz | Tol | Other Arom | Non-arom | $H_2$ |
| Toluene feed | 397.6 | (2500) | wt | | 100 | | | |
| Makeup hydrogen | 0.12 | (4.4) | vol | | | | 10 | 90 |
| Recycle hydrogen | 0.64 | (22.8) | vol | 0.1 | 0.1 | | 45 | 55 |
| HP separation net gas | $1.4 \times 10^5$ | ($5.2 \times 10^6$) | | | | | | |
| HP separator liquid | 459.8 | (2891) | wt | | | | | |
| Stripper off-gas | 2435 | (86,000) | vol | 0.1 | | | 45 | 55 |
| Fractionator feed | 453.2 | (2850) | wt | 70.2 | 29.1 | 0.7 | | |
| Benzene product | 318.1 | (2000) | wt | 100 | | | | |
| Recycle toluene | 132.0 | (830) | wt | | 100 | | | |
| Drag stream | 3.2 | (20) | wt | | | 100 | | |

Assumptions: 80 weight percent overall conversion of toluene to benzene
75 percent conversion per pass
Purification of makeup water to 90 volume percent
Recycle gas rate is 4 mol $H_2$/mol of toluene in the feed.

TABLE 3-7. COMPARISON OF TOLUENE DEALKYLATION YIELDS BASED ON DIFFERENT FEED COMPOSITIONS[17]

| | Case A | Case B | Case C |
|---|---|---|---|
| Feed - Toluene, wt.% | 59.0 | 65.0 | 100.0 |
| Benzene, wt.% | 20.5 | 10.0 | 0 |
| Nonaromatics, wt.% | 20.5 | 25.0 | 0 |
| Total feed $m^3$/day (bbl/day) | 517.8 (3256) | 560.6 (3525) | 415.5 (2613) |
| Gg/day ($10^3$ lb/day) | 0.36 (792) | 0.39 (852) | 0.30 (660) |
| Net $H_2$ consumed $m^3$/day ($10^6$ x scf/day) | 0.15 (5.22) | 0.17 (6.11) | 0.10 (3.66) |
| Products benzene, Gg/day ($10^3$ lb/day) | 0.25 (548) | 0.25 (548) | 0.25 (548) |
| Tar, Mg/day ($10^3$ lb/day) | 4.2 (9.3) | 4.5 (9.9) | 3.6 (7.9) |
| Net off-gas, $m^3$/day ($10^6$ scf/day) | 0.16 (5.62) | 0.19 (6.61) | 0.10 (3.66) |

TABLE 3-8. TOLUENE DEALKYLATION UNIT OPERATING CONDITIONS[4,5,13,14,16]

| | |
|---|---|
| Reactor inlet | |
| Temperature, °C (°F) | 537-704 (1000-1300) |
| Pressure, MPa (psig) | 3.1-4.8 (450-700) |
| $H_2$-to-feed molar ratio | 3:1-8:1 |
| $H_2$ purity of recycle gas, % | 50-60 |
| HP separator | |
| Temperature, °C (°F) | 38 (100) |
| Pressure, MPa (psig) | 2.4-3.8 (350-550) |
| Recycle compressor discharge | |
| Pressure, MPa (psig) | 3.4-5.2 (500-750) |
| Stripped overhead | |
| Pressure, MPa (psig) | 1.4-1.7 (200-250) |
| Fractionator overhead | |
| Temperature, °C (°F) | 93 (200) |
| Pressure, MPa (psig) | 0.007-0.04 (1-6) |
| Recycle column overhead | |
| Temperature, °C (°F) | 121 (250) |
| Pressure, MPa (psig) | 0.03-0.07 (5-10) |
| Recycle column bottoms | |
| Temperature, °C (°F) | 199 (390) |

off-gases from the HP separator (and LP separator, if used) and stripper are of sufficient value to be used for fuel and, in some cases, for recovery of heavier fractions for further processing.

## 3.5 TOLUENE DISPROPORTIONATION PROCESSES

Because of the marginal economics associated with toluene dealkylation, processes have been developed for disproportioning toluene into benzene and xylene. The disproportionation of toluene can be represented as follows:

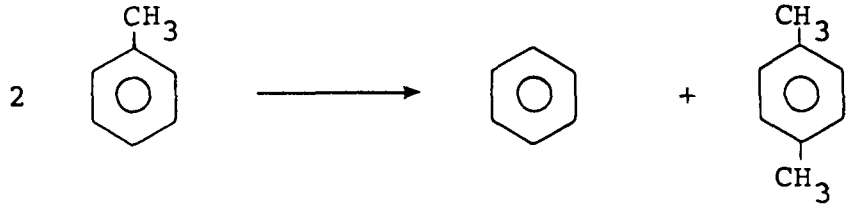


Toluene Benzene Xylenes

Since only one operating toluene disproportionation is listed in Table 2-1, the process does not merit detailed description.

Three available commercial processes are low temperature disproportionation (LTD), licensed by Mobil Oil; Tatoray, licensed by UOP; and Xylenes-Plus, licensed by Atlantic-Richfield. All are catalytic processes. When the feed is 100 percent toluene, 37 percent benzene and 55 percent xylene are obtained rather than 50 percent each as the basic toluene disproportionation reaction would predict.[9] The Xylene-Plus process also can be used to transalkylate some $C_9$ aromatics in the feed by reacting them with toluene to form more xylenes.[9] As a result in this process the benzene-to-xylene ratio can be varied from 1.5:1 to 10:1 depending upon the amount of $C_9$ aromatics in the feed.[9]

The Tatoray and LTD processes use a hydrogen atmosphere (but consume less hydrogen than the toluene dealkylation process) to prevent coke layover on the catalyst.[9,18,19] Although the process flows are similar, the operating conditions are less severe than those for toluene dealkylation. The process flow diagram for a typical toluene dealkylation unit (Figure 3-3) is also representative of toluene disproportionation. The major differences are an LP separator can be used after the HP separator,[6] a xylene column and possibly a $C_9$ column are used, hydrogen purification generally is not needed,[6] and (for the Xylene-Plus process) no makeup hydrogen is needed. The off-gases from the HP and LP separators and stripper go to fuel; however, flow rates should be considerably lower than the corresponding rates for toluene dealkylation units because far less cracking takes place (reported aromatic ring yield is 97 to 97.5%).[18] The reactor operates at lower temperatures than those used in dealkylation, and the conversion per pass (typically about 45 percent)[6,18] is also considerably lower, thus requiring more toluene recirculation. Reactor operating conditions are as follows: temperature 260° to 540°C (500° to 1000°F) and 3445 to 4480 kPa (500 to 650 psig).[18,19]

Emission sources are similar to those of toluene dealkylation units.

## REFERENCES FOR SECTION 3


1. Somekh, G.S. Part 1: Ethylene Glycols; How to Improve Aromatics Extraction. Hydrocarbon Processing and Petroleum Refiners, 42(7), July 1963. pp. 161-164.

2. Jones, W.T., and V. Payne. New Solvent to Extract Aromatics. Hydrocarbon Processing, 52(3), March 1973. pp. 91-92.

3. Somekh, G.S. New Union Carbide Aromatics Extraction Process. In: International Solvent Extraction Conference, Paper 65, The Hague, Netherlands, Society of Chemical Industry, London, U.K., 1976. pp. 323-328.

4. Trip report by T.M. Briggs. PEDCo, Covering visit to Gulf Oil Refinery, Philadelphia, August 1978.

5. Trip report by T.M. Briggs. PEDCo, on a visit to Sun Petroleum, Toledo, Ohio Refinery, September 19, 1978.

6. Trip report by T.M. Briggs. PEDCo, Covering visit to Sun Petroleum Refinery, Marcus Hook, Pennsylvania, September 18, 1978.

7. Somekh, G.S., and B.I. Friedlander. TETRA Best Aromatics Extractant. Hydrocarbon Processing, December 1969. pp. 127-130.

8. Trip report by T.M. Briggs. PEDCo, Covering visit to Phillips Petroleum, Sweeney, Texas Refinery, August 1978.

9. Mager, E.M. Aromatics Production. In: U.S. Petrochemicals, A.M. Brownstein, ed., Petroleum Publishing Co., Tulsa, Oklahoma, 1972.

10. Broughton, D.B., and G.F. Asselin. Production of High Purity Aromatics by the Sulfolane Process, Vol. 4. In: Seventh World Petroleum Congress Proceedings, 1967. pp. 65-73.

11. Trip report by T.M. Briggs. PEDCo, Covering visit to Exxon Chemical plant, Baytown, Texas. August 1978.

12. Cinelli, E., S. Noe, and G. Paret. Extract Aromatics with FM. Hydrocarbon Processing, 51(4), April 1972. pp. 141-144.

13. Fowle, M.J., and P.M. Pitts. Thermal Hydrodealkylation. Chemical Engineering Progress, 58(4), April 1962. pp. 37-40.

14. Asselin, G.F., and R.A. Erickson. Benzene and Naphthalene from Petroleum by the Hydeal Process. Chemical Engineering Progress, 58(4), April 1962. pp. 47-52.

15. Benzene from Toluene by Detol Process. Hydrocarbon Processing, 40(6), June 1961. pp. 228-229.

16. New process Makes Benzene from Toluene (Bextol). Hydrocarbon Processing, 42(3), March 1963. pp. 121-124.

17. Masamune, S., et al. A Hydrodealkylation (MHC) Process or Production of Benzene and/or Naphthalene. In: Symposium on Foreign Developments in Petrochemicals, Presented before the Division of Petroleum Chemistry, Inc., American Chemical Society, Atlantic City, September 8-13, 1968. pp. A7-A21.

18. Erandlo, et al. Toluene for Benzene and Xylenes. Hydrocarbon Processing, 51(8), August 1972. pp. 85-86.

19. Otam, S., et al. Tatoray Process - a New Transalkylation Process of Aromatics Developed by Toray. Japan Chemical Quarterly, 4, 6(16), 1968. pp. 16-18.

## SECTION 4

## MODEL PLANT DEVELOPMENT

Model plant equipment listings are developed, based on the median plant sizes determined for glycol BTX, sulfolane, and toluene dealkylation units in Section 2. Equipment itemized are pumps and compressors, process valves, relief valves, and sample connections. Generally the total number of each type of equipment is insensitive to plant size. Equipment listings were developed from plant trip report data and equipment listings from refinery plot plans (Pacific Environmental Services [PES]).[1] The toluene dealkylation reactor section equipment listing was taken from a detailed equipment listing (Pullman Kellogg).[2] A ratio of 337 process valves per process pump, except for the toluene dealkylation reactor section, was used.[3]

Tables 4-1 to 4-4 present equipment listings for the sulfolane unit; Tables 4-5 and 4-8, the glycol BTX unit; and Tables 4-9 to 4-13, the toluene dealkylation unit. The model plant sizes are presented below:

| | Feed rate, $m^3$/day (barrels/days) |
|---|---|
| Sulfolane | 1,908 (12,000) |
| Glycol BTX | 1,244 ( 7,600) |
| Toluene dealkylation | 540 ( 3,300) |

TABLE 4-1. SULFOLANE UNIT PUMP LISTING[1,3]

| Service |
|---|
| Extractor feed |
| Extractor reflux |
| Raffinate product |
| Raffinate water wash recycle |
| Water stripper tower charge |
| Bottoms-solvent recovery tower |
| Bottoms water stripper |
| Raffinate from water wash |
| Extract to fractionation |
| Feed to benzene/ toluene column |
| Benzene product |
| Toluene product |
| Feed to xylene column |
| Xylene product |
| Heavy aromatic product |

TABLE 4-2. LISTING OF VALVES IN SULFOLANE UNITS

| Service | No. of valves |
|---|---|
| Extractor | 132 |
| Stripper | 66 |
| Recovery column | 66 |
| Raffinate | 99 |
| Water stripper | 132 |
| Clay treater | 66 |
| Benzene column | 132 |
| Toluene column | 132 |
| Xylene column | 198 |
| Total | 1023 |

TABLE 4-3. RELIEF VALVES ON SULFOLANE UNIT LISTING

| Service | No. of valves |
|---|---|
| Extractor | 3 |
| Stripper | 2 |
| Recovery column | 3 |
| Raffinate | 3 |
| Water stripper | 1 |
| Clay treater | 2 |
| Benzene column | 2 |
| Toluene column | 2 |
| Xylene column | 2 |
| Solvent regeneration | 3 |
| Rundowns | 3 |
| Totals | 26 |

TABLE 4-4. SULFOLANE UNIT SAMPLE CONNECTION LISTING

| Service | No. of connections |
|---|---|
| Extractor | 5 |
| Stripper | 2 |
| Recovery column | 2 |
| Raffinate water wash | 2 |
| Water stripper | 1 |
| Clay treater | 3 |
| Benzene column | 3 |
| Toluene column | 2 |
| Xylene column | 2 |
| Solvent system | 6 |
| Water system | 3 |
| Total | 31 |

TABLE 4-5. GLYCOL BTX UNIT PUMP LISTING[1,3]

| No. | Service | RVP class[a] | Pump type[b] | Seal type[c] |
|---|---|---|---|---|
| 2 | Extractor feed | C | C | M |
| 2 | Extractor overhead (raffinate) | C | C | M |
| 2 | Solvent column feed | C | C | M |
| 2 | Solvent column reflux and product | C | C | M |
| 2 | Solvent column bottoms to extractor | - | C | M |
| 2 | Benzene column tops | C | C | M |
| 2 | Benzene column bottoms | C | C | M |
| 2 | Toluene column tops | C | C | M |
| | Toluene column bottoms | C | | |
| 2 | Hot oil | D | C | M |
| | Miscellaneous pumps for solvent, acid, soda and water | | R | P |
| 2 | Fractionator feed | C | C | M |
| 2 | Extractor reflux | C | C | M |
| 1 | Stripper extractor | C | C | M |

[a] C = Liquid vapor pressure = <5 psi (average loss = 0.14 lb/day).
D = Hot oil service (low vapor pressure).

[b] C = Centrifugal pump.
R = Rotary pump

[c] M = Mechanical seal.
P = Packed seal.

TABLE 4-6. GLYCOL BTX UNIT VALVE LISTING

| Service | No. of valves |
|---|---|
| Extractor | 192 |
| Stripped | 66 |
| Clay treaters | 66 |
| Benzene column | 132 |
| Toluene column | 132 |
| Solvent system | 192 |
| Total | 780 |

TABLE 4-7. GLYCOL BTX UNIT RELIEF VALVE LISTING

| Service | No. of valves |
|---|---|
| Extractor | 2 |
| Stripper and receiver | 3 |
| Solvent cleanup | 2 |
| Water wash | 1 |
| Clay treaters | 2 |
| Fractionation | 4 |
| Total | 14 |

TABLE 4-8. GLYCOL BTX UNIT SAMPLE CONNECTIONS LISTING

| Service | No. of connections |
|---|---|
| Extractor | 3 |
| Stripper | 4 |
| Water wash | 2 |
| Water still | 1 |
| Clay treater | 1 |
| Benzene column | 3 |
| Toluene column | 3 |
| Solvent system | 3 |

TABLE 4-9. TOLUENE DEALKYLATION UNIT PUMP SEAL LISTING

| Service | No. of pumps | RVP[a] class |
|---|---|---|
| Toluene feed | 2 | C |
| Stabilizer reflux | 2 | C |
| Benzene column reflux | 2 | C |
| Toluene recycle | 2 | C |
| Heavy aromatics to storage | 1 | C |

[a]RVP Class C - 3.4-34 kPa (0.5-5.0 psi).

RVP Class D - 3.4 kPa (0.5 psi).

TABLE 4-10. TOLUENE DEALKYLATION UNIT VALVE LISTING

| Service | No. of valves |
|---|---|
| Compression | 48V, 7L |
| Furnace | 24V, 25L |
| Reactor | 3V, 2L |
| Separator | 19V, 13L |
| Enrichment | 15V, 41L |
| Benzene column | 132 |
| Recycle column | 132 |
| Total | 261 |

TABLE 4-11. TOLUENE DEALKYLATION UNIT RELIEF VALVE LISTING

| Service | No. of relief valves |
|---|---|
| Compression | 4V |
| Furnace | 1V |
| Separation | 2V |
| Enrichment | 2V, 2L |
| Clay treaters | 2L |
| Stabilizer | 1L, 1V |
| Fractionator | 1V, 1V |
| Total | 17 |

TABLE 4-12. CONNECTION FOR TOLUENE DEALKYLATION UNIT SAMPLE VALVE LISTING

| Service | No. of samples |
|---|---|
| Compression | 1V |
| Furnace | 1V |
| Reactor | 2V |
| Separation | 2V |
| Enrichment | 1V |
| Stabilizer | 1L |
| Fractionator | 3L |
| Total | 11 |

## REFERENCES FOR SECTION 4


1. Powell, D., et al. Development of Petroleum Refinery Plot Plans. EPA-450/3-78-025. June 1978.

2. Cader, G.A., and B.B. Horton. Equipment Component Analysis for Identification of Potential Fugitive Emission Sources. U.S. Environmental Protection Agency, Research Triangle Park, North Carolina. Contract No. 68-02-2619, Task 5. June 1978.

3. Booz, Allen and Hamilton, Inc., Foster D. Snell Division. Benzene Emission Control Costs in Selected Segments of the Chemical Industry. Florham Park, New Jersey. June 1978.

## APPENDIX A

## ESTIMATION OF BENZENE EMISSION FROM RECEIVER VENTS

Uncontrolled receivers in glycol BTX, Sulfolane, and toluene dealkylation units typically operate with a purge gas to keep the receiver pressure positive and vent the net gas to the atmosphere. The simplest receiver system is the overhead receiver on the benzene column, which contains essentially pure benzene. This system is analyzed below and can be used to make estimates of emission potential from process vents in all similar operations.

Benzene column overhead receiver:

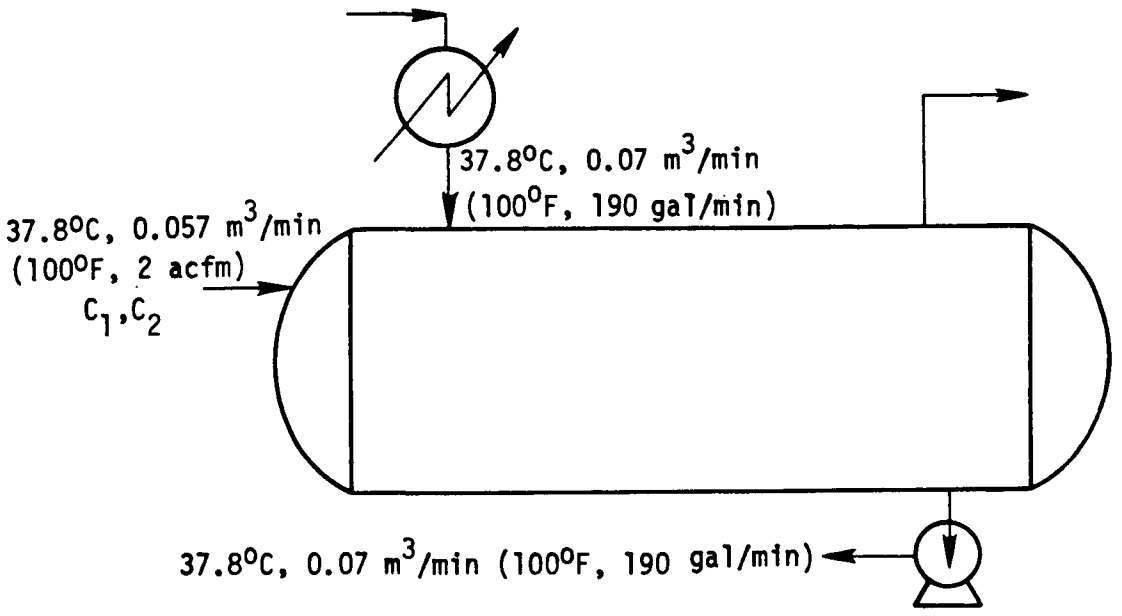

Assumptions

- Benzene production is 238 $m^3$/day (1500 bbl/day) and column reflux is 795 $m^3$ (5000 bbl/day). Total benzene flow is 1033 $m^3$ (6500 bbl/day) or 0.072 $m^3$ (190 gal/min).
- Bleed gas rate is (5 acfm) at 37.8°C (100°F) and contains methane and ethane; no benzene.
- Receiver operates at 117 kPa (17 psia).
- Vessel dimensions are 3.05 m (10 ft) diameter (D), 4.57 m (15 ft) long (L).
- Vessel operates 50 percent full.

The dynamic benzene material balance is:

$$\rho_{Mgas} \cdot Q \cdot x_o + k_g \cdot A \cdot (x_E - x) - \rho_{Mgas} \cdot Q \cdot x = \rho_{Mgas} \cdot V \cdot \frac{dx}{dt}$$

where

$\rho_{Mgas}$ = molar density of purge gas, kg mole/$m^3$ (lb mole/$ft^3$)

$V$ = volume of gas in the receiver, $m^3$ ($ft^3$)

$x_o$ = benzene mole fraction in the inlet air = 0

$k_G$ = mass transfer coefficient, kg molar/$m^2$ min (lb molar/min $ft^2$)

$x$ = benzene mole fraction in exit gas

$x_E$ = equilibrium mole fraciton of benzene

$Q$ = gas flow rate, 0.142 $m^3$/min (5 acfm) = 8.50 $m^3$/h (300 acfh)

Solving the above equation, gives

$$x = \frac{M}{N} \quad 1 - e^{-Nt}$$

where

$$M = \frac{k_G \cdot A \cdot x_E}{V \ \rho_{Mgas}}$$

$$N = \left(\frac{k_G \cdot A}{\rho_{Mgas}} + Q\right) /V$$

$t$ = time, h

Calculation of M and N

$$k_G = f \cdot \frac{GM}{2}$$

Receiver vapor space x - area

$$A' = \frac{\Pi D^2}{8} = 39.27 \text{ ft}^2$$

$$GM = \frac{Q \cdot 60}{359 \times \frac{560}{460}} \cdot A'$$

$$= \frac{5 \cdot 60}{359 \times \frac{560}{460}} \cdot 39.27$$

$$= 0.0173 \text{ lb mole/h} \cdot \text{ft}^2$$

$\bar{D}$ - receiver vapor space adjusted diameter

$$= 2 \left(\frac{A'}{\text{wetted perimeter}}\right) = 2 \left(\frac{\Pi D^2/8}{\Pi D/2}\right) = \frac{D}{2} = 5'$$

$$v = \frac{Q}{A'} = \frac{5 \times 60}{39.27}$$

$$= 7.64 \text{ ft/h}$$

$N_{Re}$ = Reynold's number

$$= \frac{\bar{D} \cdot v \cdot \rho_{gas}}{\mu'_{gas}} = \frac{5 \times 7.64 \times 0.05}{0.0266}$$

$$= 71.7$$

$$f = \frac{16}{N_{Re}} = 0.223$$

$$k_G = \frac{0.223 \times 0.0173}{2} = 1.93 \times 10^{-3}$$

$$V = \frac{\pi D^2}{8} L = 589 \text{ ft}^3$$

assume bleed gas MW = 22

$$M = \frac{k_G \times A \times x_E}{V \times \rho_{Mgas}}$$

$$= \frac{1.93 \times 10^{-3} \times 10' \times 15' \times 0.219}{589 \times 2.65 \times 10^{-3}}$$

$$= 4.06 \times 10^{-2} \text{ h}^{-1}$$

$$N = \left( \frac{k_G A}{\rho_{Mgas}} + Q \right) / V$$

$$= \frac{1.93 \times 10^{-3} \times 150}{2.65 \times 10^{-3}} + 300 \quad /589$$

$$= 0.695 \ h^{-1}$$

$$x = \frac{M}{N} \quad 1 - e^{-Nt}$$

$$= 0.058 \quad 1 - e^{-.695t}$$

Residence time, $t = \frac{V}{Q} = \frac{589 \ ft^3}{5 \times 60 \ ft^3/h} = 1.96 \ h$

$x = 0.043$

Thus 4.3 mole percent of the vent gas is benzene, assuming vapor-liquid equilibrium

Benzene emission = 0.36 $SNm^3/h$ (12.9 acfh)
= 1.20 kg (2.65 lb/h)

Because no data are available on actual receiver purge gas flow rates, the effect of varying the purge gas on benzene emissions is shown below.

| Q Purge gas flow, $m^3$/min (acfm) | t Gas residence time, h | x Vent gas benzene, mole-fraction | Benzene emission rate, kg/h (lb/h) |
|---|---|---|---|
| 0.06 (2) | 4.91 | 0.0886 | 0.994 (2.19) |
| 0.14 (5) | 1.96 | 0.043 | 1.20 (2.65) |
| 0.28 (10) | 0.98 | 0.0236 | 1.32 (2.91) |
| 0.57 (20) | 0.49 | 0.0121 | 1.36 (2.99) |

Thus, the benzene emission rate from the benzene column receiver is expected to be in the range of 0.91201.36 kg (2 to 3 lb/h). Other vented receivers all contain far lower percentages of benzene in the liquid and are expected to result in lower benzene emissions.

## TECHNICAL REPORT DATA
*(Please read Instructions on the reverse before completing)*

| | | |
|---|---|---|
| 1. REPORT NO. EPA-450/3-79-022 | 2. | 3. RECIPIENT'S ACCESSION NO. |
| 4. TITLE AND SUBTITLE Evaluation of Benzene-Related Petroleum Processing Operations | | 5. REPORT DATE October 1978 |
| | | 6. PERFORMING ORGANIZATION CODE |
| 7. AUTHOR(S) Dr. Terry Briggs, Vijay P. Patel | | 8. PERFORMING ORGANIZATION REPORT NO. |
| 9. PERFORMING ORGANIZATION NAME AND ADDRESS Pedco Environmental, Inc., 11499 Chester Road, Cincinnati, Ohio 45246 | | 10. PROGRAM ELEMENT NO. |
| | | 11. CONTRACT/GRANT NO. 68-02-2603 - Task 20 |
| 12. SPONSORING AGENCY NAME AND ADDRESS U.S. Environmental Protection Agency, Office of Air Quality Planning and Standards, Emission Standards and Engineering Division, Research Triangle Park, North Carolina 27711 | | 13. TYPE OF REPORT AND PERIOD COVERED Final |
| | | 14. SPONSORING AGENCY CODE |

15. SUPPLEMENTARY NOTES

EPA Project Officer: Kent C. Hustvedt

16. ABSTRACT

This report describes refinery processing of liquids with high benzene concentrations. Processes which are addressed include aromatics extraction (both sulfolane and glycol solvent processes), toluene dealkylation, and toluene disproportionation. Each process is described and modeled. In addition, a list and characterization of the 45 plants in the United States processing liquids with high benzene concentrations is presented. Characteristics include, where possible, company name, plant location, benzene process, and benzene production rate.

17. KEY WORDS AND DOCUMENT ANALYSIS

| a. DESCRIPTORS | b. IDENTIFIERS/OPEN ENDED TERMS | c. COSATI Field/Group |
|---|---|---|
| Petroleum Refining<br>Hydrocarbons<br>Benzene<br>Pump and Compressor Seals<br>Valves<br>Pressure Relief Valves<br>Sulfolane Toluene Dealkylation | Air Pollution Control<br>Stationary Sources | 134<br>07C |

| | | |
|---|---|---|
| 18. DISTRIBUTION STATEMENT Unlimited | 19. SECURITY CLASS *(This Report)* Unclassified | 21. NO. OF PAGES 60 |
| | 20. SECURITY CLASS *(This page)* Unclassified | 22. PRICE |

EPA Form 2220-1 (Rev. 4-77) PREVIOUS EDITION IS OBSOLETE

United States
Environmental Protection
Agency

Office of Air, Noise, and Radiation
Office of Air Quality Planning and Standards
Research Triangle Park NC 27711

Official Business
Penalty for Private Use
$300

Publication No. EPA-450/3-79-022

Postage and
Fees Paid
Environmental
Protection
Agency
EPA 335

EPA Library
T 14860

If your address is incorrect, please change on the above label; tear off; and return to the above address.
If you do not desire to continue receiving this technical report series, CHECK HERE ☐ ; tear off label; and return it to the above address