United States
Environmental Protection
Agency

Environmental Sciences Research
Laboratory
Research Triangle Park NC 27711

EPA-600/2-79-197
November 1979

Research and Development

Mobil Lidar System Developments and Operating Procedures

RESEARCH REPORTING SERIES

Research reports of the Office of Research and Development, U.S. Environmental Protection Agency, have been grouped into nine series. These nine broad categories were established to facilitate further development and application of environmental technology. Elimination of traditional grouping was consciously planned to foster technology transfer and a maximum interface in related fields. The nine series are:

1. Environmental Health Effects Research
2. Environmental Protection Technology
3. Ecological Research
4. Environmental Monitoring
5. Socioeconomic Environmental Studies
6. Scientific and Technical Assessment Reports (STAR)
7. Interagency Energy-Environment Research and Development
8. "Special" Reports
9. Miscellaneous Reports

This report has been assigned to the ENVIRONMENTAL PROTECTION TECHNOLOGY series. This series describes research performed to develop and demonstrate instrumentation, equipment, and methodology to repair or prevent environmental degradation from point and non-point sources of pollution. This work provides the new or improved technology required for the control and treatment of pollution sources to meet environmental quality standards.

This document is available to the public through the National Technical Information Service, Springfield, Virginia 22161.

EPA-600/2-79-197
November 1979

MOBILE LIDAR SYSTEM DEVELOPMENTS AND OPERATING PROCEDURES

by

George W. Bethke
General Electric Company
King of Prussia, PA 19406

Contract 68-02-2979

Project Officer

William D. Conner
Emission Measurement and Characterization Division
Environmental Sciences Research Laboratory
Research Triangle Park, North Carolina 27711

ENVIRONMENTAL SCIENCES RESEARCH LABORATORY
OFFICE OF RESEARCH AND DEVELOPMENT
U.S. ENVIRONMENTAL PROTECTION AGENCY
RESEARCH TRIANGLE PARK, NORTH CAROLINA 27711

DISCLAIMER

This report has been reviewed by the Environmental Sciences Research Laboratory, U.S. Environmental Protection Agency, and approved for publication. Approval does not signify that the contents necessarily reflect the views and policies of the U.S. Environmental Protection Agency, nor does mention of trade names or commercial products constitute endorsement or recommendation for use.

ABSTRACT

A smoke plume opacity-measuring mobile lidar system was refurbished, modified, and tested on semi-transparent screen targets. This refurbishment has involved retrofitting a new laser to a previously existing lidar transmitter/receiver, designing and fitting a new laser monitor to the laser, modifying and rebuilding the range correcting signal processor to be compatible with the other mostly new lidar components, installing all the lidar components into a new and larger van, and finally getting the entire system to function together and become operational. The resultant lidar system automatically analyzes, presents, and records smoke plume data, resulting in a much faster data rate and easier analysis than was formerly possible with the earlier versions of this lidar system. Complete operating procedures for the improved system are presented.

This report was submitted in fulfillment of Contract 68-02-2979 by General Electric Company under sponsorship of the U.S. Environmental Protection Agency. This report covers a period from September 1978 to June 1979, and was completed as of June 1979.

CONTENTS

Abstract. iii
Figures vi
Tables. vi

1. Introduction and Scope 1
2. Lidar System Description 2
   Optical/mechanical system 2
   Electronic system 8
3. Operating Instructions 12
   Turn-on procedure for van 12
   Laser operation 12
   Lidar operation 14
   Plume data analysis 20
4. Special Instructions and Precautions 22
   Motor generator usage 22
   Laser precautions 22
   Laser special purpose instructions. 24
   Lidar signal and linearity limits 25
   Lidar receiver-transmitter alignment. 27
5. Laser Monitor. 29
6. Lidar Signal Processor 31
7. Screen Target Tests. 38

References. 42

FIGURES

Number		Page
1	Mobile lidar system van	3
2	Lidar in storage/travel position	4
3	Optical block diagram of the lidar transmitter/receiver	5
4	Electronic block diagram for the lidar system	9
5	Lidar electronics ready for normal operation	10
6	Oscillograms showing form of typical lidar signals	18
7	Laser monitor and monitor bias circuit	30
8	Lidar signal processor (LSP) front and rear panels	32
9	LSP circuit diagram for board receptacles and end panels	33
10	LSP circuit diagram for card 3	34
11	LSP circuit diagram for card 2	35
12	LSP circuit diagram for card 1	36

TABLES

Number		Page
1	Lidar Transmitter Characteristics	6
2	Lidar Receiver Characteristics	7
3	Lidar Data Handling System Cable Connections	11
4	Initial Front Panel Settings for Electronics	15
5	Detector Space Charge-Limited Linearity	26
6	Transmittances from Lidar Data Processor (LDP) Data	40
7	Comparison of Oscillogram with LDP Transmittances	41

SECTION 1

INTRODUCTION AND SCOPE

The purpose of this program has been to complete the refurbishment and modification of the EPA/RTP smoke plume opacity-measuring mobile lidar system, as well as test the system on semitransparent screen targets. The resultant lidar system automatically analyzes, presents, and records smoke plume data, resulting in a much faster data rate and easier analysis than was formerly possible with the earlier versions of this lidar system[1-3].

As refurbished, the previously existing and still-used GFE components from the old lidar system[1-3] include the laser water cooler, the lidar pedestal, and the lidar receiver including the special grid-gated photomultiplier tube (PMT) detector and the PMT power supply. The newly-incorporated GFE components include a Tektronix R7704 oscilloscope (with two 7A15A amplifiers plus one 7B50 time base), a Biomation 8100 transient recorder (TR), an SRI lidar data processor (LDP), a Hewlett Packard 5055A printer, an H.P. 8013B pulse generator, a Holobeam 321 pulsed ruby laser, and a GMC Transmode van equipped with two 6.5 kW motor generators.

The scope of this lidar refurbishment effort is briefly summarized below:

1) Laser retrofit: Made the new laser operational, integrated the water cooler into the laser operation, designed and fabricated the laser cover, and mounted and aligned the laser on the lidar transmitter.

2) Laser energy monitor/trigger development: Designed, constructed, tested, and calibrated a new laser monitor which is compatible with the lidar data processor (LDP).

3) Lidar signal processor (LSP) development: Modified and re-built the range-correcting time-squared amplifier to make it compatible with a new ramp source and a low input impedance transient recorder.

4) Mechanical/electrical installation: Installed all lidar components into the van, and interconnected them as necessary.

5) System integration and operation: Optically aligned the entire system, re-adjusted the van motor generators to permit lidar operation, and made the entire lidar system operational.

6) Screen target tests: Conducted lidar outdoor tests on a series of screen targets with different densities, and analyzed the results so as to establish the best usage of the LDP outputs.

SECTION 2

LIDAR SYSTEM DESCRIPTION

The lidar system is mounted in the rear half of the GMC Transmode van, which includes two inboard 6.5 kilowatt motor generators (MG). A sliding roof opening over the lidar transmitter/receiver and its elevating pedestal allows the lidar to be oriented as necessary to interrogate smoke plumes. Figure 1 shows the van with lidar elevated and protuding from the roof. During travel, the lidar is lowered and is additionally bolted to a cross-brace as shown in Figure 2. One of the MG sets is used to power the laser and water cooler, while the other MG powers all other components.

OPTICAL/MECHANICAL SYSTEMS

The lidar transmitter and receiver are both bolted to a common base plate, with the receiver being adjustable in pointing direction[2] so as to allow proper alignment with respect to the transmitter output beam. Figure 3 shows an optical block diagram of the transmitter/receiver optics, as well as indicating the physical layout.

Referring to Figure 3, the lidar transmitter consists of a Holobeam 321 pulsed ruby laser which is beamed through negative lens L1 and air-spaced achromat objective lens L2. The combination of lenses L1 and L2 form a Galilean-type 9-power up-collimating telescope which increases laser beam diameter and decreases its divergence as shown in Table 1. The laser energy monitor/lidar trigger consists of a silicon photodiode which views (through appropriate filters) the laser light scattered from the laser output window material. This photodiode is located in the laser output window support structure. Table 1 lists more lidar transmitter and laser details.

Again referring to Figure 3, the back-scattered light is collected by a 6-inch diameter objective lens L3, focussed on field stop FS, and collimated by lens L4. The resultant collimated beam then passes through narrow band interference filter IF which is located in a thermally controlled cell with windows W1 and W2. Finally, the filtered beam is moderately scattered by ground glass GG before falling on the photomultiplier tube (PMT) detector. References 2 and 3 give full details about the receiver and mount, but for convenience many characteristics are summarized in Table 2.

Figure 1. Mobile lidar system van, with van roof open and lidar transmitter-receiver in operating position.

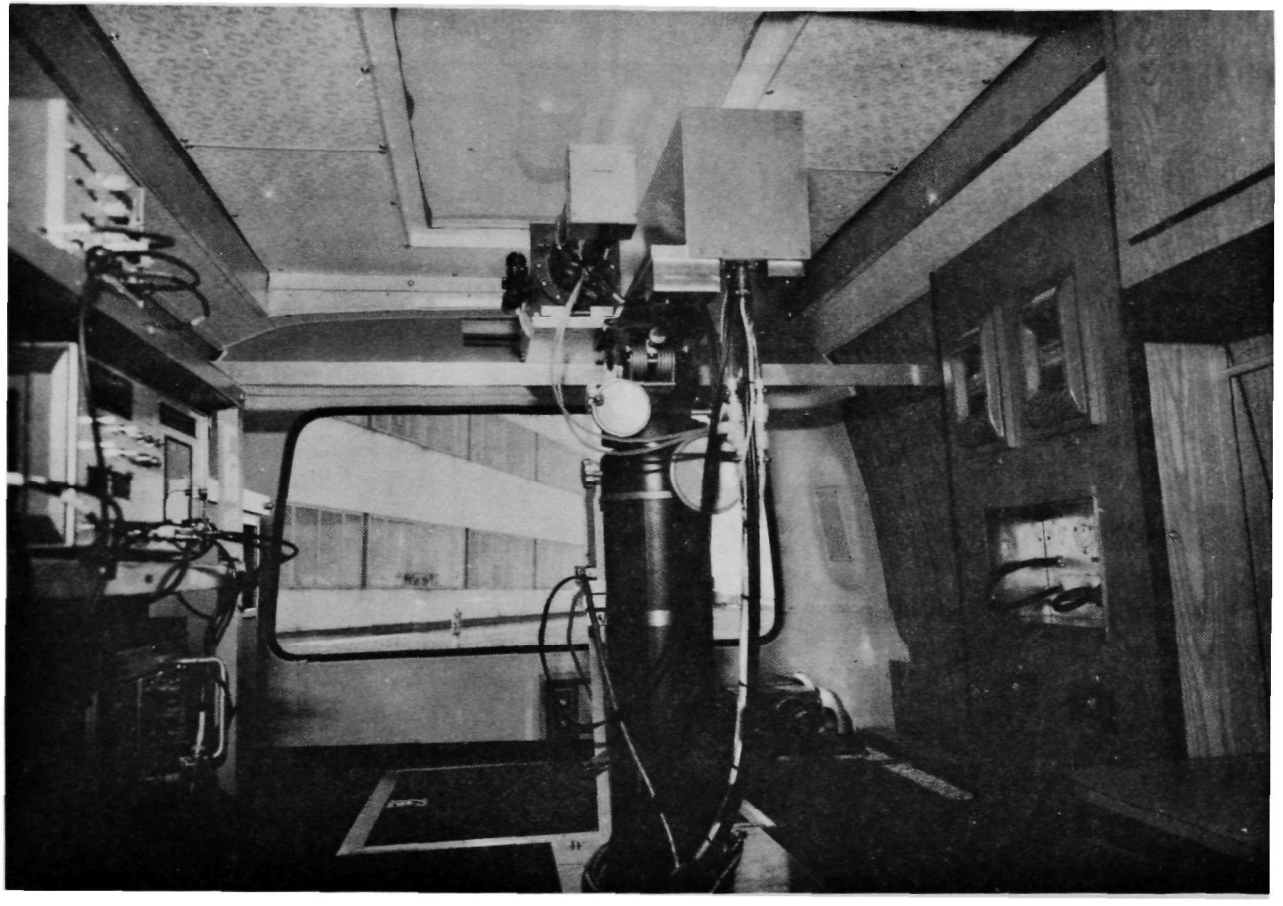

Figure 2. Lidar in storage/travel position, and van roof closed.

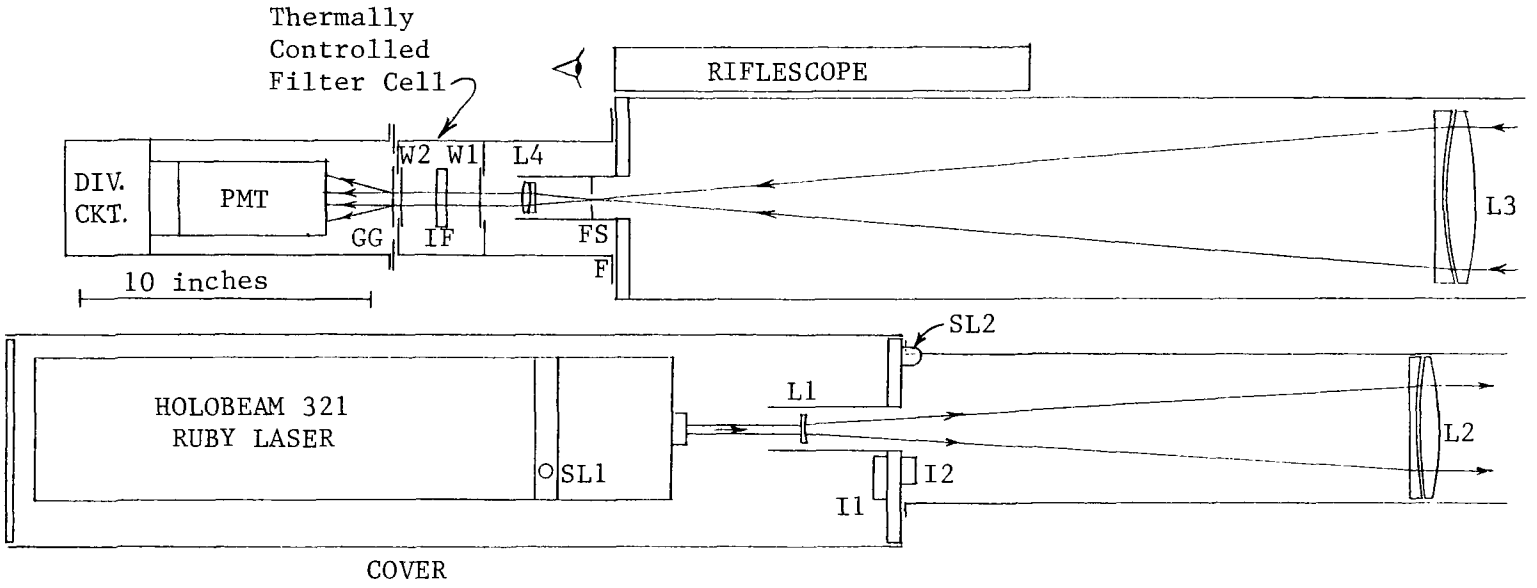

Figure 3. Optical block diagram of the lidar transmitter/receiver. Dimensional relationships are approximately correct. Transmitter/receiver center-line separation is 8 inches.

TABLE 1. LIDAR TRANSMITTER CHARACTERISTICS

Laser	
Manufacturer and model	Holobeam Model 321
Type	Pockels cell Q-switched ruby
Output wavelength	6943Å *
Output energy	2 joules/pulse maximum*
Pulse width (FWHH)	20 nsec at 2 J/pulse*
Beam divergence	2.5 mrad (full angle, ½ power)*
Beam diameter	0.85 cm
Ruby rod size	0.95 cm diam. x 7.6 cm long*
Repetition rate	0-15 ppm
Cooling	Deionized water
Laser power requirement	210-230 VAC, 60 Hz, 1 phase*
charging current	20 amps (for 1 sec)
"Idle" current	1 amp
Pockels cell requirement	115 VAC, 60 Hz nom.*
Laser Collimation	
Upcollimator power	9X
Upcollimator objective	12.7 cm (5") diam., f/5 air spaced
Collimated beam diameter	7.6 cm (3")
Collimated beam divergence	<0.5 mrad (full angle, ½ power)
Monitor/Trigger	
Detector	Silicon photodiode (PIN-3D)
Location on laser	Output window assembly

*Information supplied by laser manufacturer.

TABLE 2. LIDAR RECEIVER CHARACTERISTICS*

Aiming Optics	
Type	Riflescope
Riflescope power	4X to 12X variable
Receiving Optics	
Type	Refracting
Objective lens	15.2 cm (6") diameter, f/5
Collimating lens	5.4 cm focal length
Field of view	4.0 mrad full angle
Interference Filter	
Manufacturer	Infrared Industries
Type	3 cavity interference
Diameter	5.1 cm (2")
Transmission peak wavelength	6946.0Å (25°C)
Transmission center wavelength	6943.4Å (25°C)
Thermal shift	+0.2 Å/°C
Bandwidth (FWHH)	12.0Å
Peak transmittance	0.66
Residual transmittance	<0.01%
Filter rejection	Far uv to ≥1.0 micron
Filter tilt in lidar	0° (perpendicular to radiation)
Photomultiplier Tube Detector	
Tube manufacturer and type	IT&T F4084
Number of dynodes and type	8 linear focused dynodes
Photocathode characteristics:	
Sensitivity type	MA-2 (modified S-20)
Quantum efficiency	4.8% at 6940Å
Quantum efficiency	21% at 4080Å
Tube response time	<5 nsec
Grid gated on/off ratio	43 dB
Grid ΔV for on → off	-2.5 volts

*This information is summarized from references 2 and 3.

ELECTRONIC SYSTEMS

The lidar electronics consist of two separate systems, the laser system and the lidar data handling system. Figure 4 shows a functional block diagram which includes both systems, while Figure 5 is a photograph of the electronics shelf. See the Holobeam laser manual for a discussion of the laser system wiring and operating logic.

The lidar data handling system functions as follows: When the laser is fired, a positive pulse from the laser monitor triggers the LDP which displays a measure of the pulse height ("energy"), and also immediately produces a trigger pulse for both the transient recorder (TR) and for the oscilloscope time-base unit (used independent of the rest of the oscilloscope). The time base sawtooth output provides a ramp for the LSP range-corrector, while the time-base gate output is used to trigger the pulse generator. After a selectable delay, the pulse generator produces both a negative pulse for gating off the PMT during the intense smoke plume signal and a positive pulse for a non-shot check (if desired) on gate delay. Once the lidar or test data is captured by the TR, then the LDP interacts[4] with the TR, the oscilloscope, and the printer so as to provide a repeated oscilloscope display of TR memory and also both an LDP display plus printer recording of laser energy, shot number, the averages of each of two selectable signal intervals (A and B), the value of $(B/A)^{1/2}$, and $[1 - (B/A)^{1/2}]$.

Table 3 lists the lidar data handling system cable connections, and the types of cables (mostly coaxial) needed.

Since additions were made to the laser interlock system, they are described here and indicated in Figures 3 and 4. The laser manufacturer has interlock switches located at the laser main power supply door and side panels. The interlock line has since been extended to include a water pressure sensing switch at the laser cooler (switch set for 10 psi, where circulating water pressure is 20 psi), a laser cover switch at the top front of the transmitter cover (I1 of Figure 3), and a lidar transmitter lens tube switch (I2 of Figure 3). Also, a shutter light (SL2 of Figure 3) has been added to the outside of the lidar structure. SL2 is in parallel with the laser manufacturer-supplied shutter light (SL1 of Figure 3) which is located on the laser and thus under the laser cover.

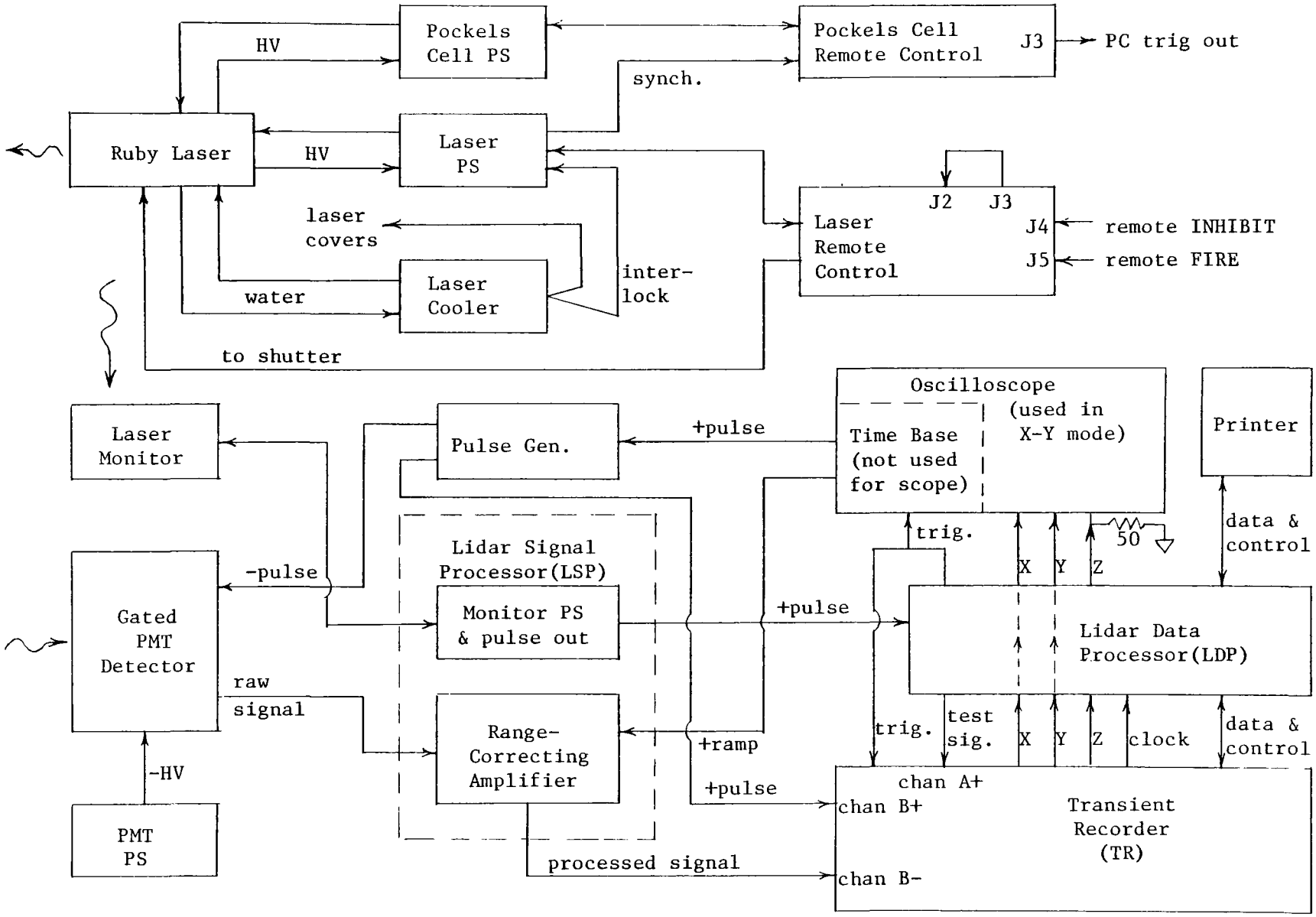

Figure 4. Electronic block diagram for the lidar system.

Figure 5. Lidar electronics ready for normal operation. The laser cooler is in the right background, while the laser power supply is not in this view.

TABLE 3. LIDAR DATA HANDLING SYSTEM CABLE CONNECTIONS*

Type Cable	From	To
RG 62	laser monitor	LSP-M "laser in"
RG 59	PMT-power supply (R)	PMT "HV input"
RG 58	PMT "pulse input"	pulse gen. "output(-)"
RG 62	PMT "output"	LSP-C "PMT in"
RG 58	pulse gen. "output(+)"	TR "chan B, + input"
RG 62	LSP-M "sig. out"	LDP "monitor in"
RG 58	LSP-C "sig. out"†	TR "chan B, - input"
RG 62	scope "+ sawtooth output" (R)	LSP "ramp in" (R)
RG 58	scope "+ gate output" (R)	pulse gen. "tigger input"
RG 58	LDP "monitor trigger out"	scope "ext trig in"
RG 58	scope "ext trig in"	TR "trigger 5VFS-50Ω"
RG 58	LDP "test signal out"	TR "chan A, + input"
RG 58	LDP "display X out"	scope "A horiz. input"
RG 58	LDP "display Y out"	scope "left vert. input"
RG 58	TR "clock out" (R)	LDP "clock 8100" (R)
RG 58	TR "X out" (R)	LDP "X axis 8100" (R)
RG 58	TR "Y out" (R)	LDP "Y axis 8100" (R)
RG 58	TR "Z out" (R)	LDP "Z axis 8100" (R)
gray	TR multipin connector (R)	LDP "Biomation 8100" (R)
gray	LDP "HP 5055A printer" (R)	printer multipin connector (R)
RG 58	LDP "Z axis display" (R)†	scope "high sensitivity Z axis input" (R). Add 50 ohm load.

*key to abbreviations:
- (R) = connector at rear
- PMT = photomultiplier tube housing
- LSP-C = lidar signal processor range corrector
- LSP-M = lidar signal processor laser monitor
- LDP = lidar data processor
- TR = transient recorder
- scope = oscilloscope

†Must be terminated with a 50 ohm load.

SECTION 3

OPERATING INSTRUCTIONS

TURN-ON PROCEDURE FOR VAN

a) Make sure the laser power supply (PS) wall breakers are off, and all equipment is off. If in doubt, turn off all wall breakers.

b) Connect each motor generator (MG) to the desired van power distribution system (see Section 4).

c) Start motor generators. They should start after 5-15 seconds of cranking. Before applying any loads, allow them to run at least until they run smoothly (1 minute minimum).

d) Turn on all wall breakers <u>except</u> for those to the laser PS.

e) Turn on laser Pockels cell, transient recorder (TR), oscilloscope (scope), lidar data processor (LDP), and lidar signal processor (LSP). Allow at least one minute warm up, especially for the Pockels cell.

f) Turn on laser cooler water pump motor (switch is on side of cooler).

g) Turn on laser cooler thermal control system (lower switch on the front of cooler), and set for water temperature not under 20°C.

h) As described in the LDP manual[4], check out the LDP/TR/oscilloscope settings and operation using the LDP "TEST" signal.

i) After five minutes, check laser line voltage, and if necessary, adjust voltage to the laser PS to 210-230 volts.

j) Turn on the wall circuit breakers to the laser PS.

LASER OPERATION

For these laser operational tests, first be sure transmitter objective lens cover is in place.

<u>Laser Turn-On Procedure</u>

a) Turn on laser main PS via its remote control station power switch. Note that the power switch light is always on if the laser wall plug is powered.

b) Turn shutter switch to ON and allow 5 seconds for shutter to open. As soon as the shutter switch is turned on, the laser may be fired even if the shutter is still closed.

c) When the laser is ready to fire, the interlock light (next to shutter switch) is out and the DISCHARGED switch is illuminated.

d) If the interlock light is still on, the interlock circuit is open somewhere and the laser will not operate. See Section 4 for interlock locations.

e) Occasionally check laser line voltage to laser PS, and if necessary adjust to 210-230 VAC.

Single Shot Operation of Laser

a) Set the Pockels cell delay control at 0.65 msec ("065") and voltage at 10 kV.

b) When firing the laser, determine laser pulse energy from ENERGY display on the LDP (see LDP energy calibration sheet). Alternately, determine the laser pulse energy with the special integrating load as described in Section 4.

c) Note that a remote control hand-held switch is available which allows either remote firing (FIRE) or remote inhibiting (INHIBIT) of the laser output.

d) Determine the PS voltage for approximate lasing threshold: Start the search at about 4.5 kV bank voltage ("450" on digital dial), increasing (or decreasing) by 0.05 kV ("005") each try. If threshold is not found, do not exceed 5.0 kV during the search (see Section 4).

e) The laser will immediately charge and fire in about 1 sec when CHARGED button is pressed (assumes J2 and J3 on the back of the remote station are still connected together as delivered).

f) See Holobeam data sheets and Section 4 for approximate output vs. bank voltage above threshold. Approximately 300-500V above threshold (about 0.6-1.0 joule/single pulse) is recommended for most uses. If large outputs are desired, start at low outputs and work up.

g) As detailed in the Holobeam manual and in Section 4 of this manual, use special care at >5.0 kV (or >500V above threshold) to avoid overdriving laser.

Automatic Firing of Laser

a) Follow above single shot procedure to establish threshold and approximate desired output.

b) Then press AUTO and adjust the pulse rate selector dial for any value up to 15 ppm. See manual for extra precautions for use at relatively high pulse rates.

c) Note that when AUTO is pressed, the first shot occurs at the end of the pre-set firing interval.

d) AUTO cycle firing is terminated by pressing DISCHARGED button.

Turning Off Laser System

In order:

a) Turn off laser components.

b) Turn off wall circuit breakers for laser PS.

c) Turn off cooler.

d) Turn off generators.

LIDAR OPERATION

During all lidar laser shots, one system operator must be responsible for aiming the lidar and monitoring the target area through the aiming riflescope. This "safety/aiming" operator can fire the laser with the hand-held remote control switch attached to the FIRE remote connector, or can prevent laser firing with the remote control switch attached to the INHIBIT remote connector.

a) Establish laser operating conditions as described above.

b) For initial lidar operation, pre-set all non-laser electronics front panels as shown in Table 4. The scope display resulting from this set of control settings is 1 microsec/cm horizontal (150 meters of lidar range/cm of scope sweep).

c) Turn on all remaining items, except leave the pulse generator turned off.

Initial Lidar Shots

a) Remove lens covers from both transmitter and receiver.

b) Open van roof cover, loosen lidar from travel brace, and elevate/aim lidar at clear sky near plume of interest.

c) Set laser for desired operating condition (see above).

TABLE 4. INITIAL FRONT PANEL SETTINGS FOR ELECTRONICS

Biomation 8100 Transient Recorder (TR)

Set all push switches out except where noted otherwise:

Channel	chan A	chan B
coupling	+ input DC (in)	- input AC (in)
± input range	0.2V	1.0V
input offset	-0.99	-0.99
input/off	OFF (in)	INPUT (in)

Arm
- Delay = 0.00
- Level = ±00
- Mode = AUTO (in)

Trigger
- Delay = 0.00
- Level = +0.20

Time Base: Sample interval = 0.01 μsec

Output: AUTO (in)

Display: X1 (in)

Tektronix R7704 Oscilloscope (scope)

Set all push switches out (and light off) except where noted otherwise:

Vert. Mode = LEFT (in)

Horiz. Mode = A (in)

7A15A Amplifiers:	Vert. (left) ampl.	Horiz. (right) ampl.
polarity =	+ UP	+ UP
mag =	X1	X1
coupling =	DC	DC
volts/div. =	0.1 volt	50 mV

7B50 Time Base:
- display mode = TIME BASE (in)
- time/div = 0.5 μsec/div.
- level/slope knob = ∿10:30

mode = NORM (in)
coupling = AC (in)
source = EXT (in)

SRI Lidar Data Processor (LDP)

Processor controls = AUTO, ALL, INHIBIT
Cursor Width: A = 050, B = 100

Hewlett Packard HP-5055A Printer

Operate/Standby = OPERATE

(continued)

TABLE 4. (continued)

GE Lidar Signal Processor (LSP)

Range corrector: gain = 5X, flatness = 5.0, switch = DIRECT

Power Designs 3K10 Power Supply

Set voltage to 1500 volts

HP 8013B Pulse Generator

pulse period switch = extreme left
pulse delay switch = extreme left, vernier = full ccw
pulse width switch = extreme left, vernier = full cw

Output Controls:

	-output		+output
amplitude switch	max up		max down
amplitude vernier	full cw		full ccw
offset	OFF		OFF
mode	-	NORM	-
internal load	-	IN	-

d) Fire laser, either from console or remotely by safety/aiming operator. (Target area must be monitored by safety/aiming operator.) Resulting oscilloscope display should be like Figure 6a except without the off-gated segment.

e) Adjust laser output and/or PMT voltage (see PMT gain curve in Figure 3.2 of reference 3) and/or partially mask receiver objective lens so the DIRECT lidar signal scope display falls below 1 volt (1/2 scale for $\pm$ 1 volt sensitivity setting on TR) at or before the nearest range of interest. If it is necessary to use PMT voltages below 1500V, then further limit PMT output at that range to values not exceeding 0.8V for 1400V or 0.7V for 1300V. See Section 4 for additional information on signal and linearity limits.

Target Ranging and Off-Gate Adjustment

a) With the LSP still in DIRECT mode, aim lidar at target (plume) and fire lidar shot.

b) Note (on scope) where lidar signal abruptly starts to rise off-scale.

c) Turn on pulse generator, and depress the +INPUT AC coupling switch of TR chan B.

d) Press LDP TEST button and note location of positive pulse from pulse generator.

e) Adjust pulse gen. pulse delay so as to position the start of the pulse slightly before the scope location previously observed (b above) for the start of the plume signal. To do this, repeatedly use trial pulse gen. delay adjustments and check with LDP TEST as in d above.

f) Lightly press the TR Chan B +INPUT DC switch so that it stays out and the + INPUT AC switch pops out.

g) Again fire lidar at plume target, and confirm that off-gating starts before the target signal. Make further pulse gen. delay adjustments if necessary.

h) Adjust pulse gen. pulse width to that smallest width which blocks the entire target "direct" signal as confirmed by more lidar shots at the target.

Range-Corrected Lidar Operation

a) With the above off-gated lidar signal still displayed on the scope, set signal average-indicating cursors A and B (intensified on scope) to desired locations, as well as to desired width (LDP). A should precede plume and B should follow plume.

b) Based on the cursor locations, reconsider or confirm the nearest range of interest as in "Initial Lidar Shots" instruction e.

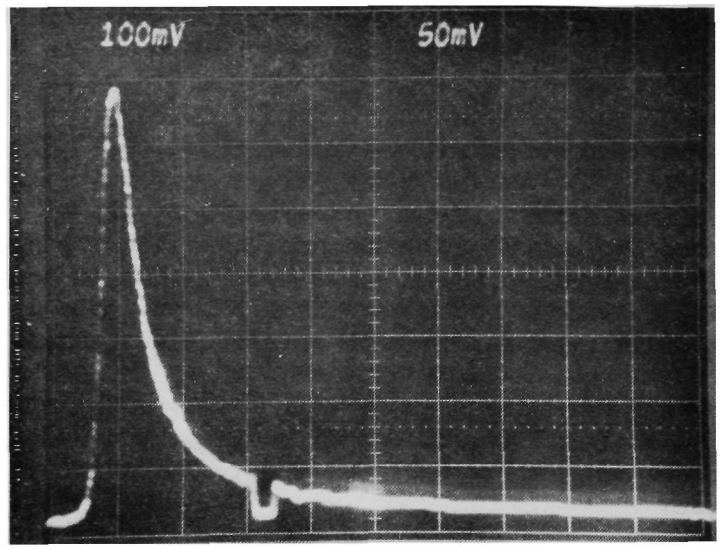

(a)

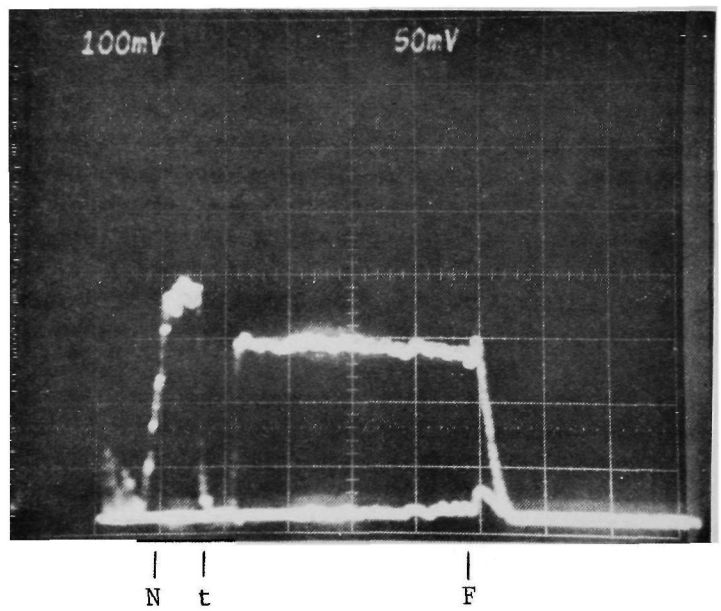

(b)

Figure 6. Oscillograms showing form of typical off-gated lidar signals. Both oscillograms have sweeps of 1 microsec/division. (a) has LSP range corrector set for DIRECT display, and TR input range = $\pm$1V. (b) has LSP set for CORR display, gain = 5X, and flatness = 5.0, while TR input range = $\pm$0.2V. Range compensation starts at N and ends at F, while semi-transparent target is at t. Note the separate zero trace at the bottom of b.

c) Switch LSP correction mode from DIRECT to CORR, and switch TR chan B ± INPUT RANGE to ± 0.2 volt.

d) Press LDP TEST for scope display of LDP zero (see bottom of Figure 6b).

e) Readjust LSP ZERO ADJ. if desired, and re-check with LDP TEST.

f) Fire lidar at target (plume) to confirm proper off-gating, signal levels, and operating ranges. See Figure 6b for example of correct result.

g) Check range-correcting ramp length:

- o If range compensation does not extend beyond cursor B, increase length of LSP ramp input.
- o If range compensation extends unnecessarily beyond cursor B, decreasing the length of the LSP ramp input will improve signal/noise ratio.
- o LSP input ramp length is controlled by the scope time base TIME/DIV. control.

h) Aim and fire lidar at clear air alongside target to further confirm selection of all parameters.

i) Also note flatness of the total clear air range-corrected signal, and optimize flatness by adjusting the LSP FLATNESS control. Refire lidar to obtain result of the adjustment.

Measurements

a) If desired, re-set the LDP ID code number, and press LDP RESET button.

b) Flip LDP processor switch from INHIBIT to PRINTER OUTPUT.

c) Press PDP TEST 2 or 3 times to record the range-corrected zero.

d) Aim lidar alongside the plume and obtain as many clear air range-corrected shots as desired.

e) Aim lidar at the plume and obtain as many range-corrected target shots as desired.

f) Repeat clear air shots if desired.

g) Re-record zero levels by pressing LDP TEST.

Lidar System Shut-Down

a) Turn off laser components.

b) Turn off wall circuit breakers for laser PS.

c) Turn off laser cooler (two switches).

d) Turn off all remaining electronic components.

e) Turn off both MG sets.

f) Replace objective lens covers on both transmitter and receiver.

g) Lower lidar and re-position it on lidar travel brace. Bolt lidar base plate to the travel brace using supplied wing nuts and lock washers.

h) Close and bolt van roof cover.

PLUME DATA ANALYSIS

The LDP-displayed and printed transmittance (T_p) and opacity (O_p) are automatically calculated from the cursor-identified near and far LDP signal averages A and B, respectively as follows:

$$T_p = (B/A)^{1/2} \qquad 3\text{-}1$$

$$O_p = 1 - T_p \qquad 3\text{-}2$$

These "raw" T_p and O_p values contain the following errors and uncertainties.

a) T_p is almost always rounded upwards (only) to the next largest hundredth (thus 0.7307 becomes 0.74).

b) The lowest level signals available from the TR are A(min)=B(min)=007, and scope(min)=0.20 cm.

c) The range-corrected zero signal levels have A and B usually 008 to 010.

d) Thus the displayed and printed T_p values do not account for the non-zero zero signal levels.

e) The T_p values also do not include correction for cases where the clear air reference shots have $A \neq B$ due to a wrong "flatness" setting or unusual atmospheric conditions.

All these deficiencies of data reduction are eliminated if transmittance is fully zero- and air-corrected (T_{ca}) from the LDP-determined A and B averages as follows:

$$O_{ca} = 1 - T_{ca} \qquad 3\text{-}3$$

$$T_{ca} = T_c(\text{plume})/T_c(\text{air}) \qquad 3\text{-}4$$

$$T_c = (B_c/A_c)^{1/2} = [(B - B_o)/(A - A_o)]^{1/2} \qquad 3\text{-}5$$

$$A_c = A - A_o \qquad 3\text{-}6$$

$$B_c = B - B_o \qquad 3\text{-}7$$

where A_o and B_o are range-corrected (LSP) zero signal level averages obtained by pressing LDP TEST as previously instructed.

SECTION 4

SPECIAL INSTRUCTIONS AND PRECAUTIONS

MOTOR GENERATOR USAGE

The van contains two motor generators (MG) and two power distribution systems, with the capability of connecting either MG to either wiring system. This way, the more sensitive items can be powered separately from those items with large variations in power consumption.

Even though the laser used for this lidar system has been modified by the manufacturer to significantly reduce peak power consumption compared to an unmodified version, the laser power supply (PS) still draws heavy current during capacitor charge-up (see Table 1). Thus the laser MG output undergoes large voltage variations and should not be used to power the other electronics or even the laser Pockels cell PS. However, the laser water cooler may be powered off the laser MG provided that the cooler's water circulation pump and its thermal control system are powered by opposite sides of the laser MG power line. In any case, the laser manufacturer emphatically states that the laser power line voltage must not continuously exceed 230 volts.

Therefore the following MG usage is recommended:

a) Power the laser and water cooler off one MG. The cooler should be operated in split mode (mode switch is on back of cooler), with the cooler's water pump and thermal control being powered from opposite sides of the MG power line.

b) Power all other items (including the laser Pockels cell power supply) off the other MG.

c) Since the laser power line must not continuously exceed 230 VAC (115 VAC each side), the line voltage applied to the laser PS should be checked, and if necessary adjusted, before power is applied to the laser and also during "idle" operation of the laser.

LASER PRECAUTIONS

Laser Line Voltage Limits

Successful laser operation depends on the laser power supply line voltage being within the relatively narrow range of 210-230 VAC. In fact, the laser manufacturer states that line voltage continuously above 230 VAC will cause failure of certain laser PS components. Thus the laser PS line voltage

must be carefully controlled and monitored as more fully discussed above.

Laser Output vs. Input

For lasers of this type, the laser output is a very sensitive function of flashlamp voltage increment (ΔV) above the lamp voltage for lasing threshold (V_t). During laser and lidar tests, V_t was found to be 4.2-4.5 kV (usually 4.3-4.4 kV) depending on coolant temperature, state of laser alignment, and Pockels cell adjustment. During the same tests, laser output has been found to typically be about 0.5, 1, and 1.5 joules/pulse for ΔV about 0.2, 0.5, and 0.8 kV above threshold, respectively. At this rate, ΔV = 2 kV above V_t could yield over 3 joules/pulse. Outputs significantly over 2 joules/pulse endanger laser optics due to very high optical power densities. Since the laser PS can be pre-set as high as 10 kV (5.6 kV over V_t), the laser could be accidently pre-set so the optical power density from even a single laser shot could severely damage the laser optics or its ruby rod.

Note that the above-listed V_t and output vs ΔV values indicate a lower threshold and an output more sensitive to lamp voltage than shown on the manufacturer-supplied data sheets. Thus it is suggested that the laser user not rely solely on the manufacturer data sheets to pre-set the laser flashlamp voltage.

Laser Coolant Precautions

During laser operation, cooling water temperature preferably should not be less than 20°C, as laser output will increase with decreasing ruby rod temperature. In addition, the water-cooled laser cavity must always be operated at a temperature greater than the local dew point in order to prevent condensation on the laser and its optical surfaces.

Do not subject the laser system to temperatures such that the cooling water could freeze. If storage in sub-freezing temperatures is unavoidable, thoroughly drain all water from the laser head and remove the water from the laser cooler.

In general, the Neslab cooling system will require only periodic inspection to verify that the distilled water is clean and clear, free of any trace of cloudiness or color. If water contamination becomes too severe, it can necessitate the replacement of the laser's helical lamp and reflector. It is a good practice to replace both water and deionization filter (Barnstead mixed Resin No. D0809) every year, regardless of usage of system. Also, during periods of non-use, circulate the water for at least an hour a month. If the clear flexible water tubing between cooler and laser ever develops an inner coating (such as green algae), replace it with clear Tygon S-50-HL tubing, 3/8 inch bore, 3/32 inch wall.

LASER SPECIAL PURPOSE INSTRUCTIONS

Laser Interlock Locations

After the laser PS wall plug is powered and the laser turned on, if the laser remote station interlock light (next to shutter switch) remains on, the laser interlock line is open and the laser will not operate. Interlock switches are located at the main PS door, the main PS side panels (top center), the laser cooler (water pressure sensor), the lidar laser cover (top front), and the lidar transmitter objective lens tube where it attaches to the support plate. Interlock external (white) line plugs are located inside the main PS, on the laser cooler side, and at the lidar base plate bottom.

Auxiliary Laser Connectors

The laser contains BNC connectors with sometimes useful special purpose inputs/outputs as follows.

Back of Remote Station Control Unit--

a) J2 fires laser (if already charged) when apply +15V.

b) J3 supplies +15V when laser fully charged (normally and as delivered, J2 is jumpered directly to J3).

c) J4 is a +15V safety interlock. Ground J4 to remotely prevent charging or to discharge capacitors.

d) J5 is normally +15V. Ground J5 to remotely charge and fire laser.

Back of Q-Switch Remote Control Unit--

a) J2 receives +20V pulse from J12 of the laser power supply when the flashlamp is triggered.

b) J3 supplies +30V pulse about 250 nsec before the laser lases.

Inside Laser Main Power Supply--

J12 supplies +20V 10 microsecond pulse when the flashlamp is triggered.

Use of Laser Monitor Integrating Load

When it is desired to measure laser output without use of the LDP or more accurately and reproducibly than is possible via the LDP, or if it is desired to check for the quality or timing of the laser output, then the laser monitor integrating load from the original lidar system can still be used in the same manner as in the past[5]. To make this type of laser output measurement, the oscilloscope is used in real time as follows:

a) Move the RG 62/U coaxial cable from LDP monitor IN to original monitor load box set for ENERGY, which is to be connected to scope "left vert. input".

b) Set the scope vertical amplifier to 0.1 V/div. or 50 mV/div.

c) Convert the scope to normal operation by depressing "horizontal mode B". This brings the scope time base unit into play.

d) Set the time base unit to mode = NORM, coupling = AC, source = LINE, level/slope = 10:00, display mode = TIME BASE, and sweep = "50 μs/div.".

e) Turn on both the scope and the LSP.

f) Adjust scope zero and "B intensity".

g) Switch the scope time base source to INT.

h) Operate the laser (see Section 3) and observe the real-time wave form on the scope.

The wave form should show a single step rise. For laser output energy, refer to the separately supplied "Laser Energy Monitor Calibration" dated 3/9/79. Occasionally during weak lasing, there is a second weaker pulse about 10 microseconds after the first, causing a two step rise in the waveform.

LIDAR SIGNAL AND LINEARITY LIMITS

The lidar PMT detector is still the same as described in reference 3, and the LSP range correction circuit still has the same basic design as in reference 3. However, there are now differences in operation.

Range Corrector Operation

The LSP range corrector operational requirements are the same as described in reference 3, except that (a) the far range limit (F) for correction is now selected differently due to a different ramp source, and (b) the criteria for judging the near range limit (N) for correction are somewhat modified as described below.

As indicated in Section 3, the limit F is determined by LSP input ramp length which is controlled by the oscilloscope 7B50 time base unit "time/div" switch. If continuous control is desired,the 7B50 can be switched to continuously variable operation by snapping the "time/div" central button to its out position. It should be remembered that the LSP range-correcting circuit yields highest signal/noise results when it is used such that range F does not greatly exceed the maximum far range needed.

The near range limit (N) for linear range compensation is never closer than the nearest range at which the receiver "sees" the entire laser beam (discussed later). As before, if the PMT output and range corrector gain are both such that the output of the A2 linear amplifier (93 ohm input) reaches

10 volts and is held there by its overvoltage-protecting feedback diode, the near range limit N for range compensation is delayed until the linear amplifier output again drops below 10 volts due to increasing signal range. However when this situation is now being set up as described (for 5X gain) in Section 3 for initial lidar shots, the PMT output is first observed with the LSP set for DIRECT. Thus the direct signal voltage [V(dir)] is observed across the transient recorder's 50-ohm (not 93-ohm) input load, causing V(dir) to be (50/93) as large as input voltage to the range corrector. Consequently, for LSP-limited range, N is that range at which the following product drops to 10 volts:

$$\begin{aligned} V(dir) \times gain \times (93/50) &= 5.6\ V(dir) \text{ for 3X gain} \\ &= 9.3\ V(dir) \text{ for 5X gain} \\ &= 18.6\ V(dir) \text{ for 10X gain} \end{aligned}$$

As reviewed below, for best results do not allow the PMT to be operated with non-linear output beyond the near range point N.

Detector Linearity

As detailed in reference 3, for the intended type of lidar use the PMT linearity is space-charge limited. Table 5 summarizes some results from reference 3. The Table 5 values listed under "LSP direct" are for a 50-ohm load, while the "LSP corr" values are for a 93-ohm load.

TABLE 5. DETECTOR SPACE CHARGE-LIMITED LINEARITY

Deviation from linearity	≤2%			5%		
	Max	Max Volts			Volts	
PMT Volts	Current (ma)	LSP Direct	LSP Corr.	Current (ma)	LSP Direct	LSP Corr
1300	14	0.70	1.3	17	0.86	1.6
1400	17	0.83	1.5	20	1.0	1.8
1500	19	1.0	1.8*	23	1.1	2.1*
1600	23	1.1	2.1	26	1.3	2.4
1700	26	1.3	2.4	29	1.4	2.7
1800	29	1.4	2.7*	32	1.6	3.0*
1900	32	1.6	3.0	36	1.8	3.3
2000	37	1.8	3.4	40	2.0	3.7

*Note: The actual measured values are starred. All other values are obtained from interpolation, extrapolation, and calculation.

The optimum applied voltage is that which yields a nearest range signal maximum equal to or somewhat larger than the PMT space charge linearity limit

(see Table 5) since this will allow maximum system range. This applied high voltage is determined empirically by observing the lidar signal at range N and adjusting the PMT voltage until the desired linearity condition is met. The voltage required may vary from day to day depending on ambient aerosol scattering and on the laser output energy. Another means for reducing PMT output is by masking down the receiver telescope or by reducing laser output.

LIDAR RECEIVER-TRANSMITTER ALIGNMENT

The lidar system is aligned by moving the receiving system optical axis with respect to the transmitting system axis by means of bolt-lockable adjustments under the receiving telescope[5]. Alignment adjustments should not be generally necessary because of the rigidity of the design coupled with the relatively wide field-of-view of the receiver (4 mrad full angle) compared with the <0.5 mrad full angle lidar transmitter output divergence.

In order for the lidar system to have complete overlap between the transmitted laser beam and the receiver field-of-view (fov) for ranges over 150 meters, a geometric analysis shows that for this lidar system the receiver and transmitter optical axes must intersect at a finite distance rather than at infinity (parallel optical axes). This analysis yields the following results, where R_c is convergence distance of the receiver and transmitter optical axes, while R_n and R_f are the corresponding near range and far range, respectively, for complete overlap between the transmitted laser beam and the receiver fov.

R_c	R_n	R_f	Units
160	91	infinity	meters
200	101	>infinity	meters
300	118	>infinity	meters
400	130	>infinity	meters
762	150	>infinity	meters
infinity	181	>infinity	meters

The lidar system was delivered with R_c = 300 m and receiver telescope focused for 300 m, yielding full receiver-transmitter overlap for ranges >120 m. The aiming riflescope is aligned parallel to the receiving telescope axis.

To check system alignment, the lidar system should be aimed at a diffusely reflecting light-colored target surface about 300 meters away. At that range, the lidar receiver and laser transmitter axes should be coincident, while the riflescope should be aimed about 12 cm to the left of that common point. This can be confirmed by firing the laser and noting the location of the red spot on the diffuse target through both the riflescope and also through the receiver[5] collimating lens (L4 of Figure 3). Also confirm the receiver telescope focus for the target distance.

If the system alignment should need adjusting or if a different convergence (target) distance is desired (200-500 m recommended), the lidar

receiver-riflescope combination may be moved with respect to the laser and re-secured via the lockable pivots and bolts below the receiver telescope[5]. The riflescope cross-hair may be moved with respect to the receiver telescope via its internal screw adjustments.

If it is ever desired to align the system axes at infinity, it is useful to have a gridded diffusely reflecting target with 4 cm squares marked off (white painted plywood for example). This target is then placed at a range of at least 60 meters and viewed through the receiving system. The riflescope should then be adjusted until its cross-hair is on the receiving system axis vertically, and approximately 12 cm (3 spaces) displaced horizontally to the left. The riflescope and receiving system axes are now parallel and will move together during any further receiving system adjustments. Next the laser should be fired and its position on the diffuse target noted through the receiving system. The receiving system should then be adjusted until the laser pulse is on the receiving system axis vertically and is 20 cm (5 spaces) to the right horizontally. (Note that since the receiving telescope provides a reversed view, a feature on the right will appear to be on the left.) Now all three optical axes are aligned at infinity.

SECTION 5

LASER MONITOR

This monitor detection system provides both the time zero (trigger) information and laser output energy information for the entire lidar system.

As shown in Figure 7, the laser monitor consists of a PIN-3D silicon photodiode which measures the laser light scattered from the laser output window (OW). This photodiode is located in the laser output window support structure together with a 100A wide narrow bandpass filter (NB) to discriminate against laser flashlamp light, and a 0.2 optical density neutral filter (NF) to adjust the monitor sensitivity. Still refering to Figure 7, the photodiode is biased to -15 volts DC from the LSP box where it is capacitively coupled to whichever supplied monitor load is used, or to any 93-ohm load.

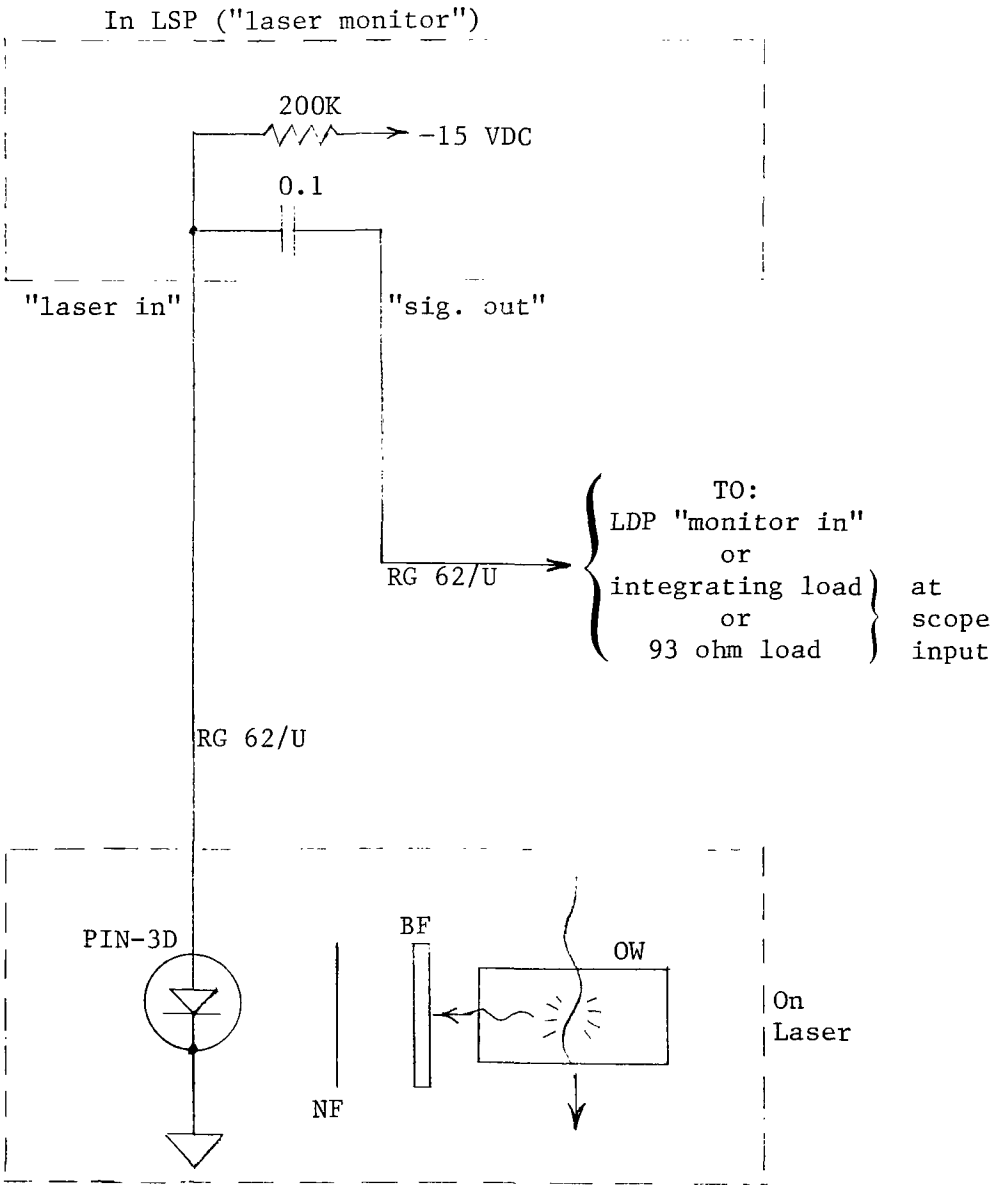

Figure 7. Laser monitor and monitor bias circuit.

SECTION 6

LIDAR SIGNAL PROCESSOR

As indicated in Section 1, the previous version of this lidar system[1-3] employed a range-compensating "time squared amplifier" (TSA)[3] to aid the lidar measurement of smoke plume opacity. However, this lidar refurbishment has resulted in so many system changes, that the original form of TSA is no longer compatible with the other components of the lidar system. The old lidar system used real time signal display on an oscilloscope which also provided a high voltage ramp for the TSA, while the refurbished lidar employs a non-real time scope display. Also, the old lidar system had the TSA output go to a high impedance load (scope), while the refurbished lidar has the range-correcting output go to the 50-ohm input of a transient recorder.

These lidar system changes have been accommodated by a redesigned "lidar signal processor" (LSP) range-correcting circuit. This LSP package also contains the laser monitor power source and coupling capacitor shown in Figure 7. Figure 8 shows the LSP front and rear panels, while Figures 9, 10, 11, and 12 show the LSP circuit diagrams.

As indicated by Figure 4 and instructed in Section 4, the range-correcting TSA ramp is still obtained (via RG 62/U cable) from the oscilloscope time base unit, but that time base unit is now operated independently of the scope X-Y display. The resulting ramp length ("far limit" control) is adjustable at the scope time base unit, but amplifier A1 (Figure 10) had to be added to the TSA to increase the ramp amplitude and to allow the inclusion of a ramp DC bias ("flatness") control. Since the final multiplier M2 (Figure 11) has a somewhat limited maximum output current capability plus a too severely reduced frequency response near its upper limit of output current, a high output current high frequency amplifier A3 (Figure 12) has been added after multipler M2 to act as a booster amplifier. The range-correcting signal output now must be terminated at any 50-ohm load, such as the transient recorder supplies.

The resulting modified range-correcting circuit has been measured to have 5-6 MHz frequency response for all signal output amplitudes to about 3 volts (max) across a 50-ohm load such as found at the transient recorder input. The measured 10% to 90% rise and fall response times (T_r and T_f respectively) are listed below for both medium and large amplitude outputs into a 50-ohm load.

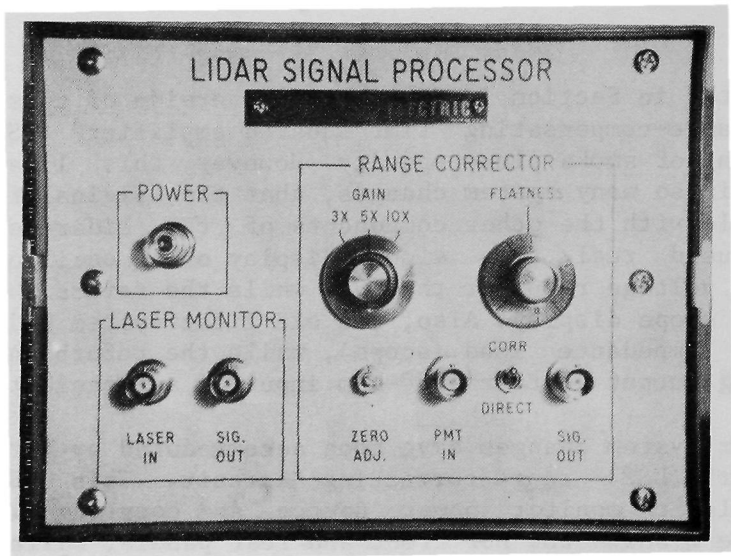

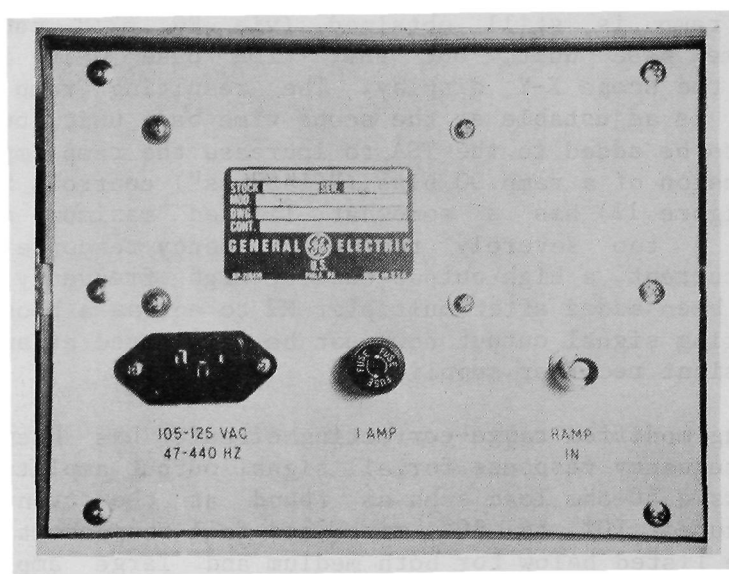

Figure 8. Lidar signal processor (LSP) front (top) and rear (bottom) panels.

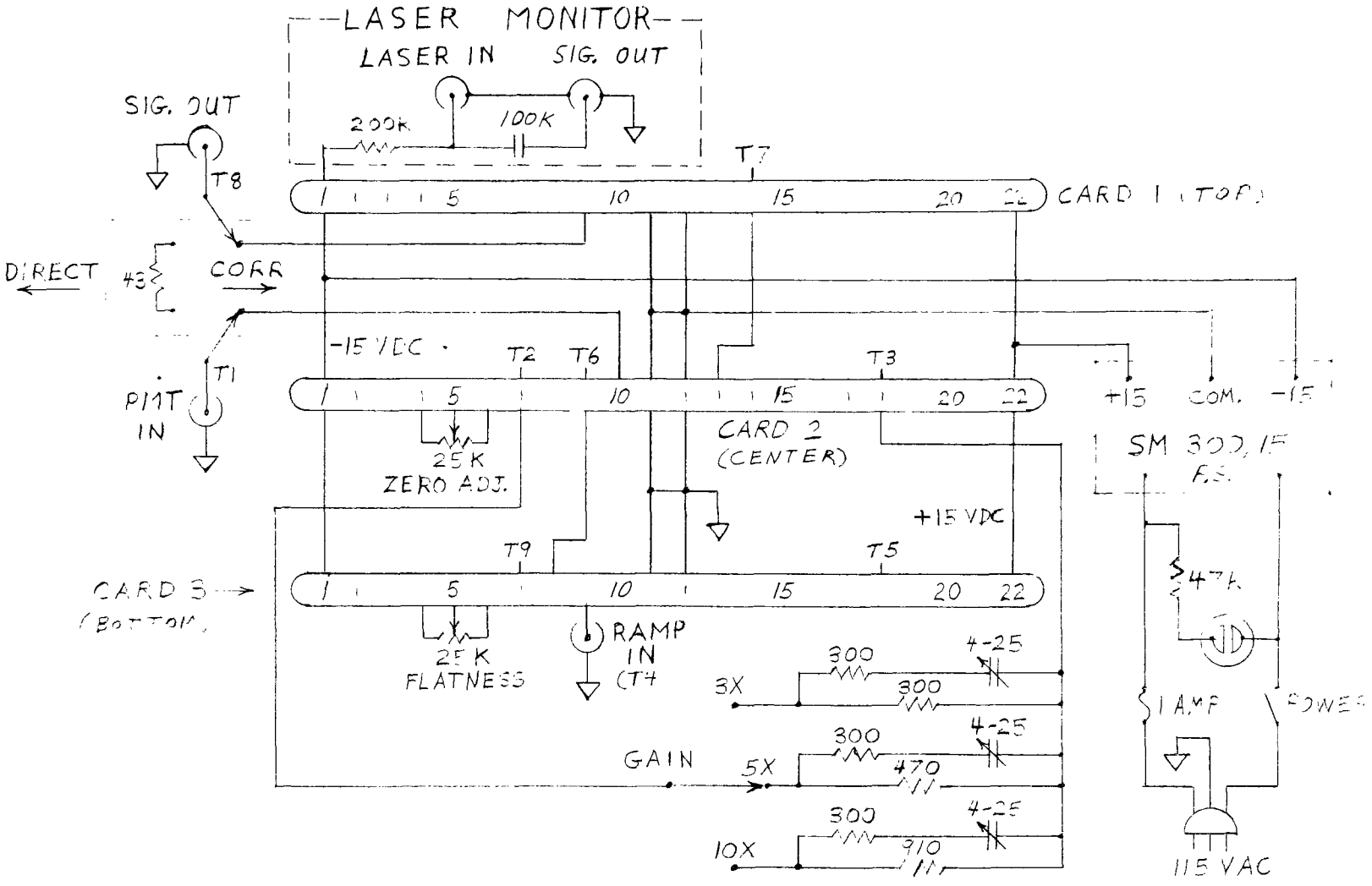

Figure 9. Lidar signal processor (LSP) circuit diagram for card receptacles and end panels.

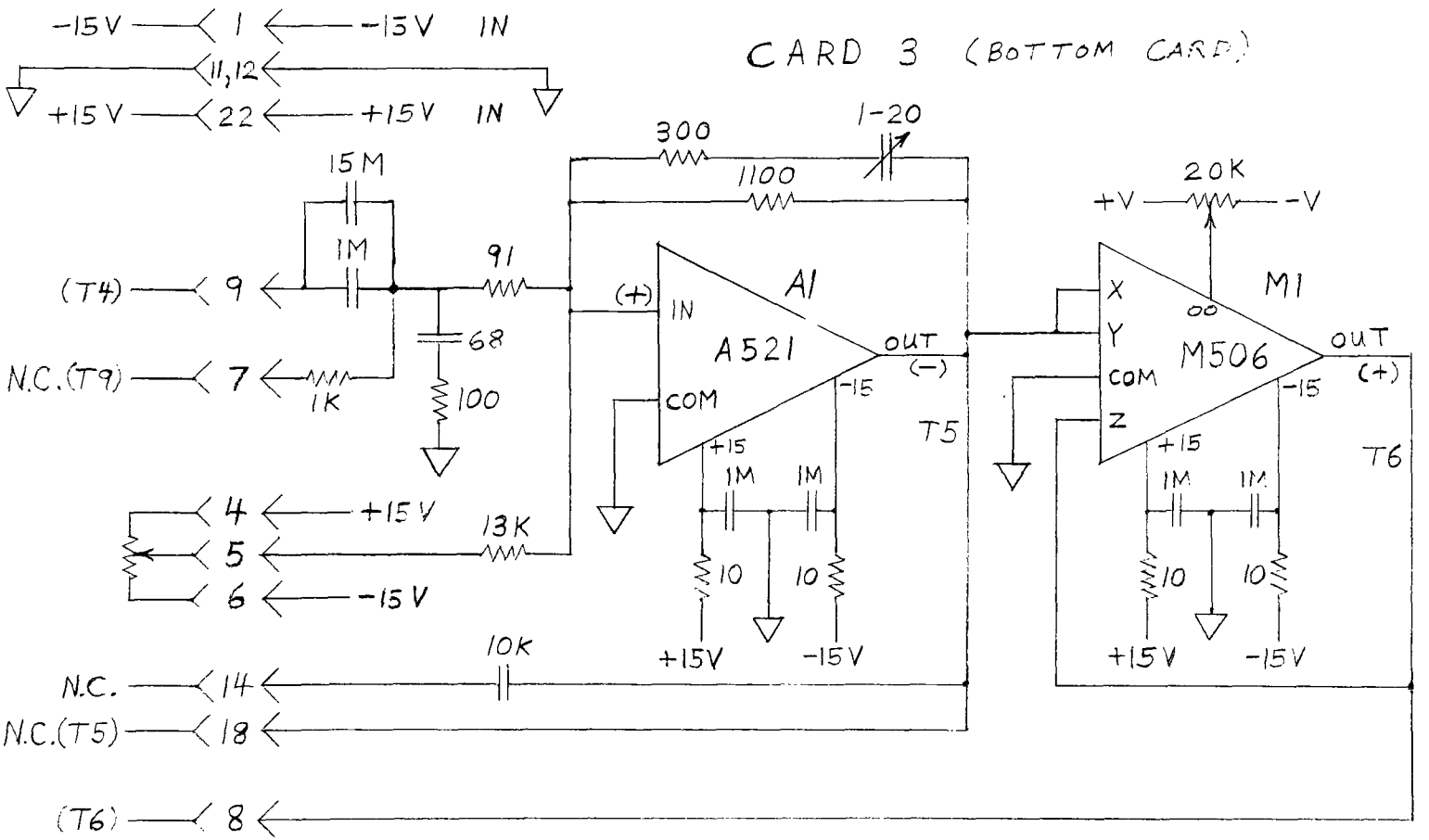

Figure 10. Lidar signal processor (LSP) circuit diagram for card 3 (bottom card).

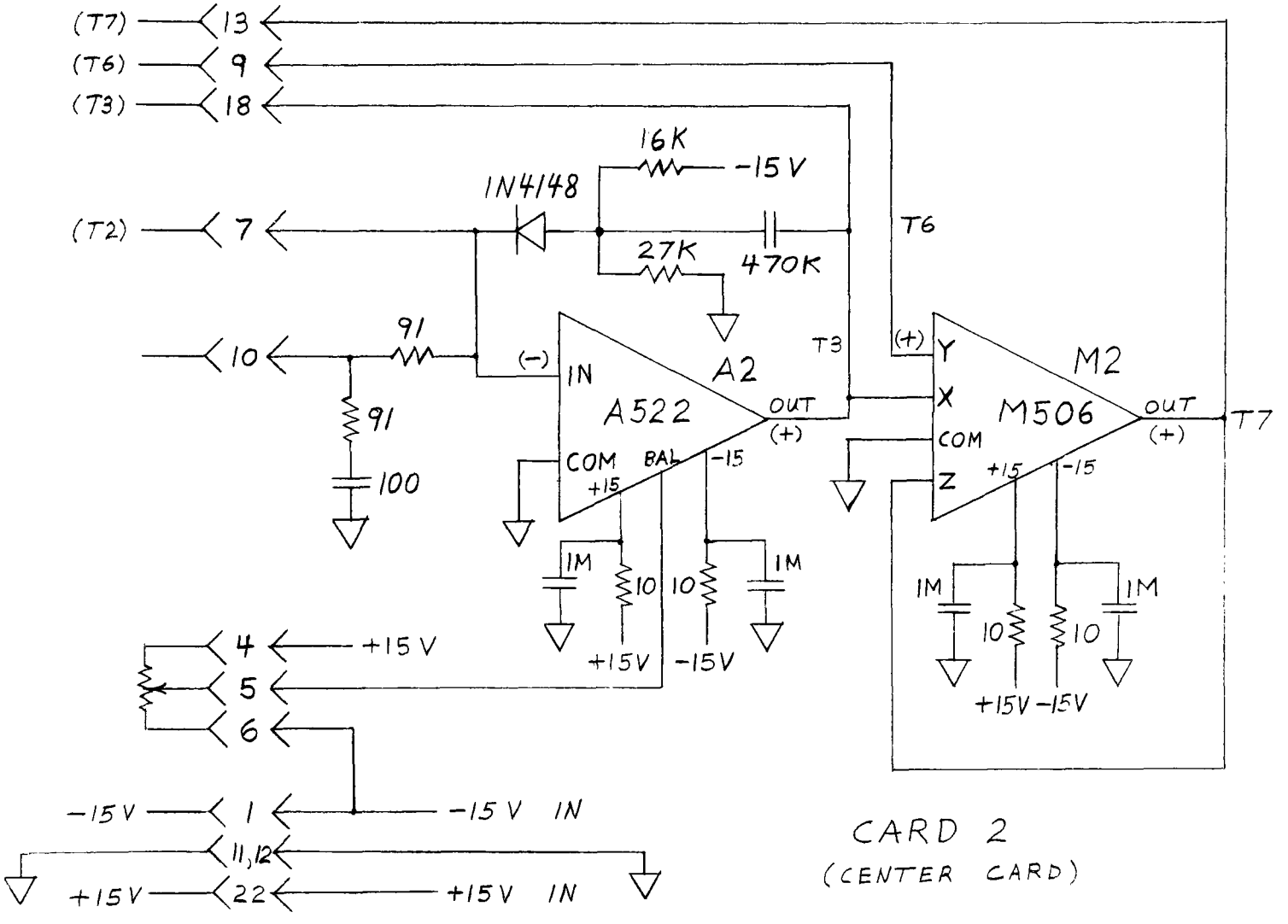

Figure 11. Lidar signal processor (LSP) circuit diagram for card 2 (center card).

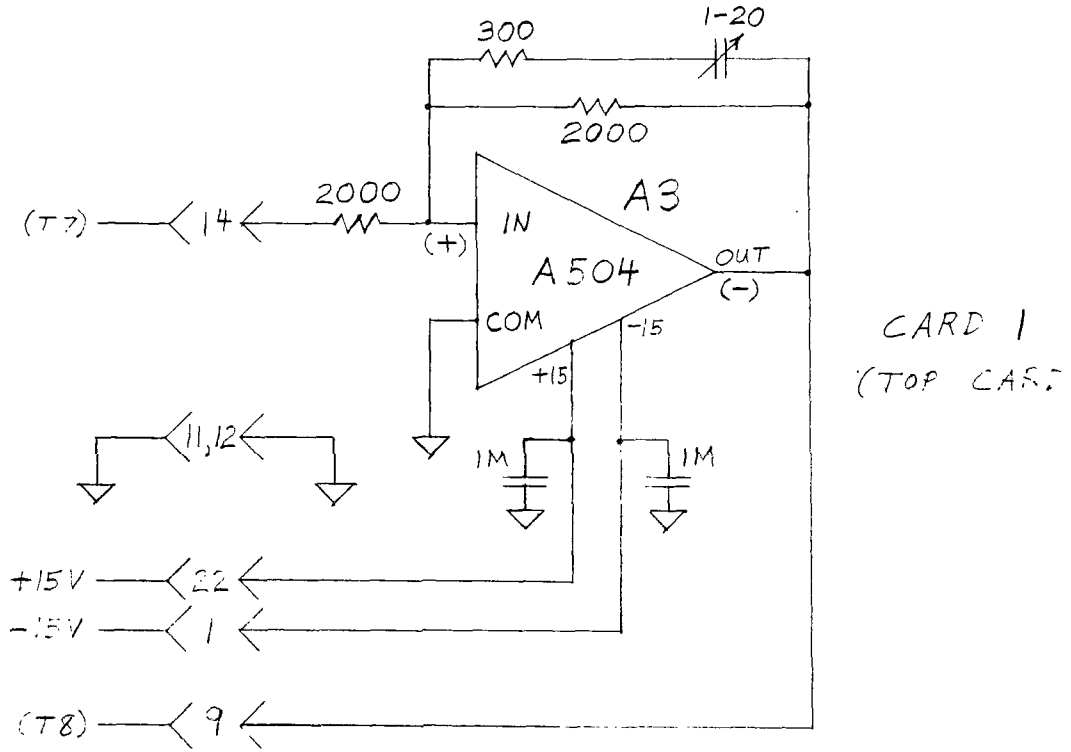

Figure 12. Lidar signal processor (LSP) circuit diagram for card 1 (top card).

LSP Gain	LSP Corrector "SIG. OUT" Amplitude (volts)	T_r (nsec)	T_f (nsec)
3X	-0.5	60	59
5X	-0.5	60	59
10X	-0.5	76	77
3X	-2.5	61	55
5X	-2.5	61	55
10X	-2.5	76	71

Since the LSP range correcting is based on the TSA design of reference 3, the various TSA discussions of reference 3 still apply except as modified above and in Section 4.

SECTION 7

SCREEN TARGET TESTS

After the refurbished lidar system was made operational, opacity measurements were made of six semi-transparent screen targets from ranges of 190-225 meters. The GFE screen targets used for these tests were supplied mounted with clear apertures of 1.12 meters diameter, and numbered 12, 14, 24, 32, 43, and 52. They have wire spacings ranging from about 2.6 cm for #12, to 1.7 cm for #14, to less than 0.2 cm for all the other screens.

Similar to the target tests of reference 3, the screens were supported by a wood structure placed on the roof of a small building at the General Electric Valley Forge Space Center. The van was located southwest of the targets and about 220 meters away for all but the last tests (screen #12) which were made from a distance of about 190 meters. Due to adjacent interferences, measurements were restricted to those days with winds from the southwest (through west and northwest) to from the north. Unfortunately the entire month available for testing was a period of unusually bad weather, with winds generally from the wrong directions and rain or fog almost daily. There were a few weather "windows" during which measurements were made, but even then, high velocity southwest winds apparently produced a turbulence-induced dust plume "tail" which extended far enough behind the target building to invalidate most shots made on two of the days.

Finally, all but the last set of runs had considerable electrical interference from laser Pockels cell (PC) noise. While this pickup noise degraded the lidar signal appearance (oscilloscope display), the LDP A and B averages were not severely affected due to the large number of data points (40 and 100) used for the averages. Before the last screen target runs, that PC pickup had been significantly reduced (see Figure 6b) through selective changes in PC cable routing and suitable changes in incidental grounds.

The general data acquisition method after establishing laser and lidar operating conditions (see below) was to obtain and record (printer) the lidar zero signal (via LDP TEST) and then run and record a series of screen shots while observing the lidar signal displays on the oscilloscope screen. As each lidar signal was displayed (for at least 4 seconds), a good or bad data judgment was made based on general signal shape only, and the "bad" shot numbers noted for later discard during data analysis. As stated above, on two of the days most shots were bad. Similarly, a series of clear air lidar shots were obtained and judged while aiming alongside the screen target holder. Oscillograms were also made from some of the scope displays, as well as of the related zero-signal displays.

All of the screen target and associated clear air shots were made with the following lidar system operating conditions.

laser output = 0.3-0.7 joules/shot
PMT volts = 1300-1500 volts
PMT off-gate width = 500 nsec
LSP gain = 5X
LSP ramp length = 4 and 5 microseconds
Sample interval = 10 nsec
LDP A avg. = 40 samples wide and located just before the off-gate period
LDP B avg. = 100 samples wide and centered 1.5-2.0 microseconds after the target

The results of these screen target tests are summarized in Tables 6 and 7. Table 6 shows the averaged results of raw (T_p) and zero-corrected (T_c) LDP transmittances for each set of screen target and associated clear air shots, as well as clear air-corrected target transmittance (T_{ca}) and opacity (O_{ca}). See Section 3 for definitions and equations.

Table 7 provides a comparison of screen (and air) transmittance as manually measured from lidar signal oscillograms (T_s), vs. LDP-assisted screen (and air) transmittance for the exact same shots. The LDP values are shown as separately calculated raw $(B/A)^{1/2}$, as directly presented raw T_p, and as zero-corrected T_c values (see Section 3). As shown by the (T_p-T_s) and (T_c-T_s) columns of Table 7 and by the average (T-T_s) values at the bottom of the table, it is clear that the transmittance values manually measured and calculated from oscillograms (T_s) agree best by far, with the LDP zero-corrected (T_c) values. A comparison of T_p with $(B/A)^{1/2}$ also shows that the LDP transmittance value presented is usually the next highest hundredth, not the nearest hundredth.

In conclusion, it is recommended that the data analysis method of Section 3 will give the most accurate result over the broadest range of circumstances.

TABLE 6. SCREEN TARGET AND AIR TRANSMITTANCES FROM LIDAR DATA PROCESSOR(LDP) DATA*

Target (air or scr. #)	# Shots		"OK" Averages		T_{ca} (fully corr.)	Opacity O_{ca}
	Tot.	OK	T_p(raw)	T_c		
#52	9	9	0.490	0.413	0.417	0.583
air	9	9	1.002	0.991		
#43	40	3	0.530	0.466	0.452	0.548
air	14	13	1.033	1.032		
#32	40	16	0.679	0.644	0.655	0.345
air	12	11	0.988	0.982		
#32	27	3	0.687	0.660	0.637	0.363
air	18	10	1.035	1.036		
#24	30	7	0.760	0.720	0.733	0.267
air	17	17	0.995	0.983		
#24	42	26	0.757	0.726	} 0.758	0.242
air	11	11	0.972	0.958		
#14	26	25	0.881	0.855	} 0.893	0.107
#12	13	11	0.887	0.866	0.859	0.141
air	8	8	1.015	1.008		

*From Section 3, we have the lidar results and definitions:

T_p = LDP "raw" (uncorrected) transmittance

T_c = zero signal level-corrected transmittance

T_{ca} = zero level-corrected and clear air-corrected transmittance

O_{ca} = opacity = $1 - T_{ca}$

TABLE 7. COMPARISON OF OSCILLOGRAM TRANSMITTANCE (T_s) WITH SAME-SHOT LIDAR DATA PROCESSOR(LDP) TRANSMITTANCES

Target (air or scr. #)	T_s (scope)	From LDP*			(T_p-T_s)	(T_c-T_s)
		$\sqrt{B/A}$	T_p	T_c		
#52	0.420	0.482	0.49	0.417	+0.070	-0.003
air	1.012	1.013	1.02	1.009	+0.008	-0.003
#43	0.474	0.542	0.55	0.476	+0.076	+0.002
air	1.013	-	-	-	-	-
#32	0.655	0.694	0.70	0.664	+0.045	+0.009
air	0.993	0.991	1.00	0.986	+0.007	-0.007
#24	0.704	0.728	0.73	0.700	+0.026	-0.004
air	1.004	1.007	1.01	1.000	+0.006	-0.004
#14	0.848	0.864	0.87	0.847	+0.022	-0.001
#14	0.844	0.860	0.86	0.837	+0.016	-0.007
#14	0.828	0.844	0.85	0.831	+0.022	+0.003
air	1.029	1.030	1.03	1.028	+0.001	-0.001
#14	0.885	0.890	0.90	0.883	+0.015	-0.002
air	0.992	0.992	1.00	0.987	+0.008	-0.005
#12	0.876	0.885	0.89	0.869	+0.014	-0.007
air	1.011	1.031	1.03	1.030	+0.019	+0.019
average screen $(T-T_s)$					+0.034	-0.001
average air $(T-T_s)$					+0.008	0.000

*See Section 3 or Table 6 for definitions of transmittances T_p and T_c, as well as of A and B.

REFERENCES

1. C.S.Cook, G.W.Bethke, and W.D.Conner, "Remote Measurement of Smoke Plume Transmittance Using Lidar," Applied Optics 11, 1742 (1972).

2. C.S.Cook and G.W.Bethke, "Design, Construction, and Evaluation of a Mobile Lidar System for the Remote Measurement of Smoke Plume Opacity," EPA Contract No. 68-02-0093, Final Report, Report No. APTD-0968, December 1971.

3. G.W.Bethke, "Development of Range Squared and Off-Gating Modifications for a Lidar System," EPA-650/2-73-040, December 1973.

4. "Lidar Data Processor Technical Manual," EPA Contract No. 68-02-1291, December 1977.

5. "Mobile Lidar System Operating Manual," EPA Contract No. 68-02-0093, January 1972.

TECHNICAL REPORT DATA
(Please read Instructions on the reverse before completing)

1. REPORT NO. EPA-600/2-79-197	2.	3. RECIPIENT'S ACCESSION NO.
4. TITLE AND SUBTITLE MOBILE LIDAR SYSTEM DEVELOPMENTS AND OPERATING PROCEDURES		5. REPORT DATE November 1979
		6. PERFORMING ORGANIZATION CODE
7. AUTHOR(S) G. W. Bethke		8. PERFORMING ORGANIZATION REPORT NO.
9. PERFORMING ORGANIZATION NAME AND ADDRESS General Electric Company, Space Division, Space Sciences Laboratory, P. O. Box 8555, Philadelphia, Pennsylvania 19101		10. PROGRAM ELEMENT NO. 1AB712 BC-09 FY-78
		11. CONTRACT/GRANT NO. 68-02-2979
12. SPONSORING AGENCY NAME AND ADDRESS Environmental Sciences Research Laboratory - RTP, NC, Office of Research and Development, U.S. Environmental Protection Agency, Research Triangle Park, N. C. 27711		13. TYPE OF REPORT AND PERIOD COVERED Final 9/78-5/79
		14. SPONSORING AGENCY CODE EPA/600/09
15. SUPPLEMENTARY NOTES		

16. ABSTRACT

A smoke plume opacity-measuring mobile lidar system was refurbished, modified, and tested on semi-transparent screen targets. This refurbishment has involved retrofitting a new laser to a previously existing lidar transmitter/receiver, designing and fitting a new laser monitor to the laser, modifying and rebuilding the range correcting signal processor to be compatible with the other mostly new lidar components, installing all the lidar components into a new and larger van, and finally getting the entire system to function together and become operational. The resultant lidar system automatically analyzes, presents, and records smoke plume data, resulting in a much faster data rate and easier analysis than was formerly possible with the earlier versions of this lidar system. Complete operating procedures for the improved system are presented.

17. KEY WORDS AND DOCUMENT ANALYSIS

a. DESCRIPTORS	b. IDENTIFIERS/OPEN ENDED TERMS	c. COSATI Field/Group
* Air pollution		13B
* Plumes		21B
* Opacity		14B
* Remote sensing		17H
* Optical radar		15E
* Mobile equipment		

18. DISTRIBUTION STATEMENT RELEASE TO PUBLIC	19. SECURITY CLASS (This Report) UNCLASSIFIED	21. NO. OF PAGES 49
	20. SECURITY CLASS (This page) UNCLASSIFIED	22. PRICE

EPA Form 2220-1 (Rev. 4-77) PREVIOUS EDITION IS OBSOLETE