United States
Environmental Protection
Agency

Environmental Monitoring
Systems Laboratory
P.O. Box 93478
Las Vegas NV 89193-3478

EPA/600/4-90/025
September 1990

Research and Development

EPA

Determination of Trace Elements in Hazardous Wastes by Ion Chromatography

Project Report

DETERMINATION OF TRACE ELEMENTS IN HAZARDOUS WASTES BY ION CHROMATOGRAPHY

by

J. T. Rowan
Lockheed Engineering and Sciences Company
1050 E. Flamingo Road, Las Vegas, Nevada 89119
and
E. M. Heithmar
U.S. Environmental Protection Agency
P.O. Box 93478, Las Vegas, Nevada 89193-3478

Contract 68-03-3249

Project Officer

E. M. Heithmar
Quality Assurance and Methods Development Division
Environmental Monitoring Systems Laboratory
Las Vegas, NV 89193-3478

OFFICE OF MODELING, MONITORING SYSTEMS AND QUALITY ASSURANCE
OFFICE OF RESEARCH AND DEVELOPMENT
U.S. ENVIRONMENTAL PROTECTION AGENCY
WASHINGTON, DC 20460

NOTICE

The information in this document has been funded wholly or in part by the United States Environmental Protection Agency under Contract 68-03-3249 to Lockheed Engineering and Sciences Company. It has been subjected to the Agency's peer and administrative review, and it has been approved for publication as an EPA document. Mention of trade names or commercial products does not constitute endorsement or recommendation for use.

ABSTRACT

An ion chromatographic method is evaluated for the determination of cadmium, cobalt, copper, iron, manganese, nickel, and zinc. This procedure combines the features of preconcentration and matrix modification with ion chromatography for the analysis of acidic aqueous samples, such as digests of hazardous wastes or preserved water samples. The system is able to separate alkali and alkaline-earth metals, as well as many anions, from the sample matrix prior to loading of the sample on the analytical separator column.

Detection limits for 6.5-mL samples are generally below 1 μg/L. The calibration curves in terms of both peak area and peak height are linear for at least 2.5 orders of magnitude. Quantification on the basis of peak height is recommended to reduce inter-element effects on peaks that are not completely resolved. Precision, measured as relative standard deviation, is generally better than 2% at 250 μg/L. The technique is evaluated on synthetic seawater and three reference materials. There is no effect from high salt concentrations, and recoveries are generally within acceptable quality-control limits.

This report was submitted in fulfillment of contract number 68-03-3249 by Lockheed Engineering and Sciences Company under the sponsorship of the U.S. Environmental Protection Agency. This report covers a period from January 1, 1990 to August 24, 1990. Work is on-going.

CONTENTS

Notice ii
Abstract iii
Figures vi
Tables vii

1. Introduction 1
2. Conclusions 3
3. Recommendations 4
4. Materials and Methods 5
5. Experimental Procedures 12
6. Results and Discussion 14

References 26
Appendix

A. Method 6060: Ion Chromatography of Transition Metals 27

FIGURES

Number		Page
1(a)	Chelation ion chromatograph in sample loading configuration. P1 = high-pressure gradient pump, P2 = two-channel peristaltic pump, P3 = reciprocating single-piston pump, P4 = pneumatic pump	6
1(b)	Chelation ion chromatograph in trace-element chelation configuration	7
1(c)	Chelation ion chromatograph configuration for elution of analytes to interface column	8
1(d)	Chelation ion chromatograph configuration for conversion of interface column to ammonium form	9
1(e)	Chelation ion chromatograph configuration for analyte separation and chelator-column clean-up	10
2	Chelation ion chromatogram of 80 μg/L cobalt, copper, iron, manganese, nickel, and zinc, and 250 μg/L cadmium.	15
3	Chelation ion chromatogram of synthetic seawater spiked with 80 μg/L cobalt, copper, iron, manganese, nickel, and zinc, and 250 μg/L cadmium.	19
1A	Chelation ion chromatograph in sample loading configuration. P1 = high-pressure gradient pump, P2 = two-channel peristaltic pump, P3 = reciprocating single-piston pump, P4 = pneumatic pump. V1 = valve 1, V2 = valve 2. Valves are shown in the 'B' position	30

TABLES

Number		Page
1	DETECTION LIMITS (μg/L, 3σ CRITERION, N=7) BASED ON HEIGHT, AREA, AND SAMPLE SIZE	16
2	PRECISION AS A FUNCTION OF SAMPLE CONCENTRATION AND QUANTITATION METHOD	18
3	RECOVERY OF ANALYTES FROM SYNTHETIC SEAWATER	20
4	ANALYSIS OF ICAP-19	22
5	ANALYSIS OF NIST 1643B	23
6	ANALYSIS OF QB390W2	24
1A	METALS DETERMINED BY METHOD 6060	27
2A	STOCK STANDARD	34
3A	CALIBRATION STANDARD CONCENTRATIONS (μg/L)	35
4A	ION CHROMATOGRAPHY SEQUENCE	37

SECTION 1

INTRODUCTION

Trace-metal analysis of environmental samples is generally performed by some type of atomic spectroscopy: graphite furnace atomic absorption spectrometry (GFAAS), inductively coupled plasma-atomic emission spectrometry (ICP-AES), or inductively coupled plasma-mass spectrometry (ICP-MS). These techniques allow rapid, sensitive, accurate, and precise determination of metal concentration in a wide variety of matrices.

While ion chromatography (IC) is not expected to replace the spectroscopic methods, it has attributes that make it attractive in some applications. It uses relatively inexpensive instrumentation which is not limited to just metal determinations. It can be configured in various ways to determine the gamut of inorganic and organic ionic species in aqueous samples. This versatility would be very valuable for a laboratory of limited capital resources. IC instrumentation is significantly more rugged than atomic spectrometry equipment, making field-transportable instruments feasible. IC offers the potential for element speciation, while atomic spectrometry is generally limited to total element determinations.

All these factors make the recent development of a sensitive, reliable IC method for the determination of trace metals by workers at the National Institute of Science and Technology (NIST) and Dionex Corporation (*1*) important. They used chelation preconcentration of the trace metals to enhance the sensitivity of IC separation with post-column derivatization and spectrophotometric detection. This report describes an evaluation of a modified form of that method for the analysis of acidic aqueous samples with matrices similar to hazardous-waste digests.

The application of chelation preconcentration to ion chromatography offers the same advantages which are provided by its implementation with ICP-AES and ICP-MS (*2,3*). Most important, the ability to concentrate several milliliters of sample lowers IC detection limits to the point that they are competitive with atomic spectroscopic techniques. Also, the removal of interfering alkali and alkaline-earth metals allows the analysis of complex samples of the type that might be expected of hazardous wastes.

In the method evaluated in this report, a preconcentration column is interfaced with an analytical separator column via a high-capacity cation-exchange column for the determination of cadmium, cobalt, copper, iron, manganese, nickel, and zinc. The preconcentration column contains a macroporous polystyrene/divinylbenzene resin functionalized with iminodiacetate, which has a high affinity for many transition metals and lower affinity for alkaline-earth metals. Alkali metals and anions are not retained by the column, and alkaline-earth metals can be selectively removed by exchange with ammonium ion. The concentrated trace metals are then eluted by nitric acid to the high-capacity interface column. The excess hydronium ion concentration in the interface column after exposure to the acid matrix is removed by exchange with ammonium ion. The interface column is then switched into the analytical eluant stream. The metals are separated in the analytical column, and they are detected photometrically after post-column derivatization with a chromophoric reagent.

SECTION 2

CONCLUSIONS

The IC method evaluated in this report has been shown to be applicable to six trace metals: cobalt, copper, iron, manganese, nickel, and zinc. Accurate determinations of cadmium are also possible in samples containing substantially more cadmium than cobalt. The appropriateness of this method for cadmium determinations will depend on sample composition and data quality objectives.

Detection limits for a 6.5-mL sample loop have been estimated to range from 60 ng/L for cobalt to 1.3 μg/L for zinc. The estimates are probably higher than the actual limits in the cases of cadmium, cobalt and manganese, due to software limitations in evaluating baseline noise for these elements.

Long-term precision (over several hours), for a 2.5 μg/L sample, ranges from 0.6% to 7.1% relative standard deviation (RSD) for measurements based on chromatographic peak height and from 1.2 to 14% RSD for quantitation based on area. The long-term precision for a 250 μg/L sample ranges from 0.4% to 2.1% RSD based on height and from 0.6% to 2.1% RSD based on area. Sequential analyses of sample duplicates generally agree within ± 2% of the mean concentration using either quantitation method.

An analysis of a synthetic seawater sample spiked with analytes verifies that the matrix modification system effectively eliminates interferences from alkali and alkaline-earth metals, as well as interferences from anions. Recoveries from three reference materials are within ± 10% of the reference values for all analytes except cadmium, which exhibits low recoveries in samples with large differences between the sizes of the overlapping cadmium and cobalt peaks. This problem is more severe when quantitation is based on area measurement, because the software overestimates the contribution of the tailing cobalt peak to the cadmium peak area. Quantification of cadmium on the basis of peak height is therefore preferable.

The IC method which is evaluated in this report has been designated Method 6060 and is presented in SW-846 format in Appendix A.

SECTION 3

RECOMMENDATIONS

In the current geometry, the preconcentration eluants must be directed through the sample loop in order to pass the chelator column. Depending on the size of the sample loop, this may require large volumes of eluant. Mixing between ammonium acetate and nitric acid eluants in the sample loop is another problem that may degrade method performance and makes selection of appropriate elution times difficult. The geometry of the apparatus can and should be altered so that eluant passes through the sample loop only long enough to inject the entire sample. This would be a more efficient ion chromatographic system that would consume less eluant and probably improve analytical performance.

This study and similar work on preconcentration applied to ICP-MS has demonstrated that the eluants contribute to the blank levels. The ICP-MS work has shown that blanks can be reduced for some elements by passing the ammonium acetate eluant through a preliminary chelator column in order to remove impurities. The blank values, and therefore the detection limits, may be reduced by further alteration of the IC configuration to include on-line polishing of some of the ammonium acetate eluant.

Lead and cadmium are two important target analytes for IC. Cadmium was evaluated in this study, but suffered peak-overlap interference from cobalt. This situation may be slightly ameliorated by further optimization of the integration algorithm. Results for all of the metals would probably benefit from refinement of this aspect of the software. Preliminary efforts have been made to determine lead by modification of the present method, but sensitivity for that metal is low, and the lead peak splits under some conditions. Further experimentation, including alteration of the eluant chemistry and modification of the detection scheme, is required to adapt this procedure for lead.

SECTION 4

MATERIALS AND METHODS

INSTRUMENTATION

The ion chromatograph used in this work is shown schematically in Figure 1(a). The sample pump, P2 in the Figure, is a two-channel peristaltic pump (Gilson Minipuls II, Gilson Medical Electronics, Middleton, WI). The rest of the apparatus is an ion chromatograph that consists entirely of equipment from Dionex Corporation, Sunnyvale, CA. The eluant paths in the apparatus are metal-free.

The chromatographic system is based on three columns. The first is an iminodiacetate chelating resin column (MetPac CC-1). The second column is a high-capacity, fully sulfonated, cation-exchange resin column (TMC-1) with a capacity of 0.3 meq. This column serves as an interface between the chelator column and the analytical separator column, which is a low-capacity, mixed-bed, ion-exchange column (IonPac HPIC-CS5).

The eluants used in the preconcentration and matrix modification steps are delivered by a programmable, high-pressure, gradient pump, P1 (Model GPM-II). The gradient pump controls two independent sets of column-switching valves, V1 and V2, that direct the flow of eluants throughout the procedure. A reciprocating single-piston pump, P3 (Model DQP), is used to pump eluant through the analytical column. The post-column derivatization reagent is introduced to the eluant in a post-column reactor with a reagent delivery system (Model RDM) driven by a pneumatic pump, P4. The post-column reactor is connected to a flow-through, variable-wavelength detector (Model VDM-II) via a knitted reaction coil. The detector monitors at 530 nm. Data acquisition and integration are accomplished with the Dionex Autoion 450 chromatography software on an 80386-based computer via a computer interface (Model ACI).

REAGENTS AND SAMPLE PREPARATION

In-house deionized water, prepared using a Milli-Q Reagent Water System (Millipore Corporation, Bedford, MA) and feed water purified by reverse osmosis, was used for all solutions. Sub-boiling, distilled-in-

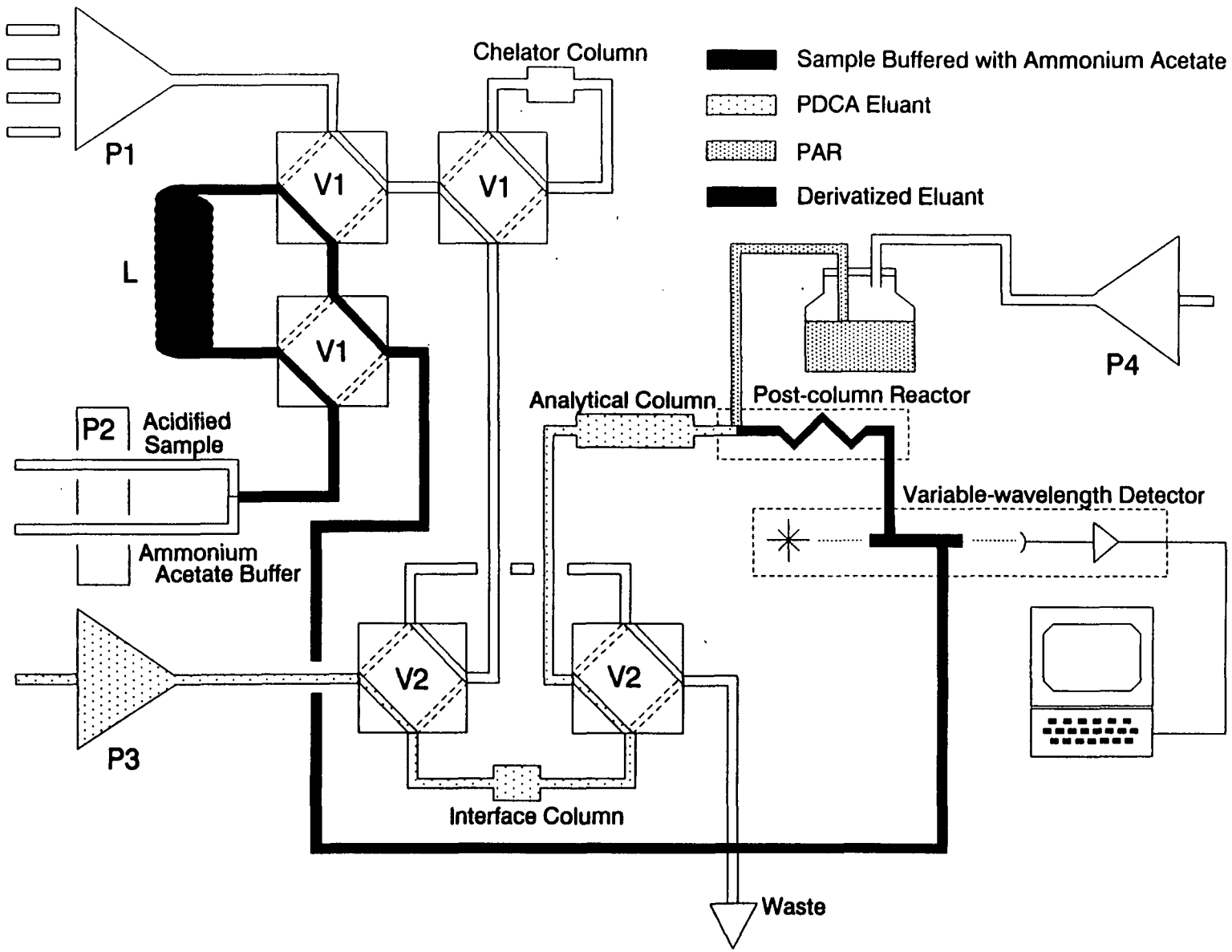

Figure 1(a). Chelation ion chromatograph in sample loading configuration. P1 = high-pressure gradient pump, P2 = two-channel peristaltic pump, P3 = reciprocating single-piston pump, P4 = pneumatic pump.

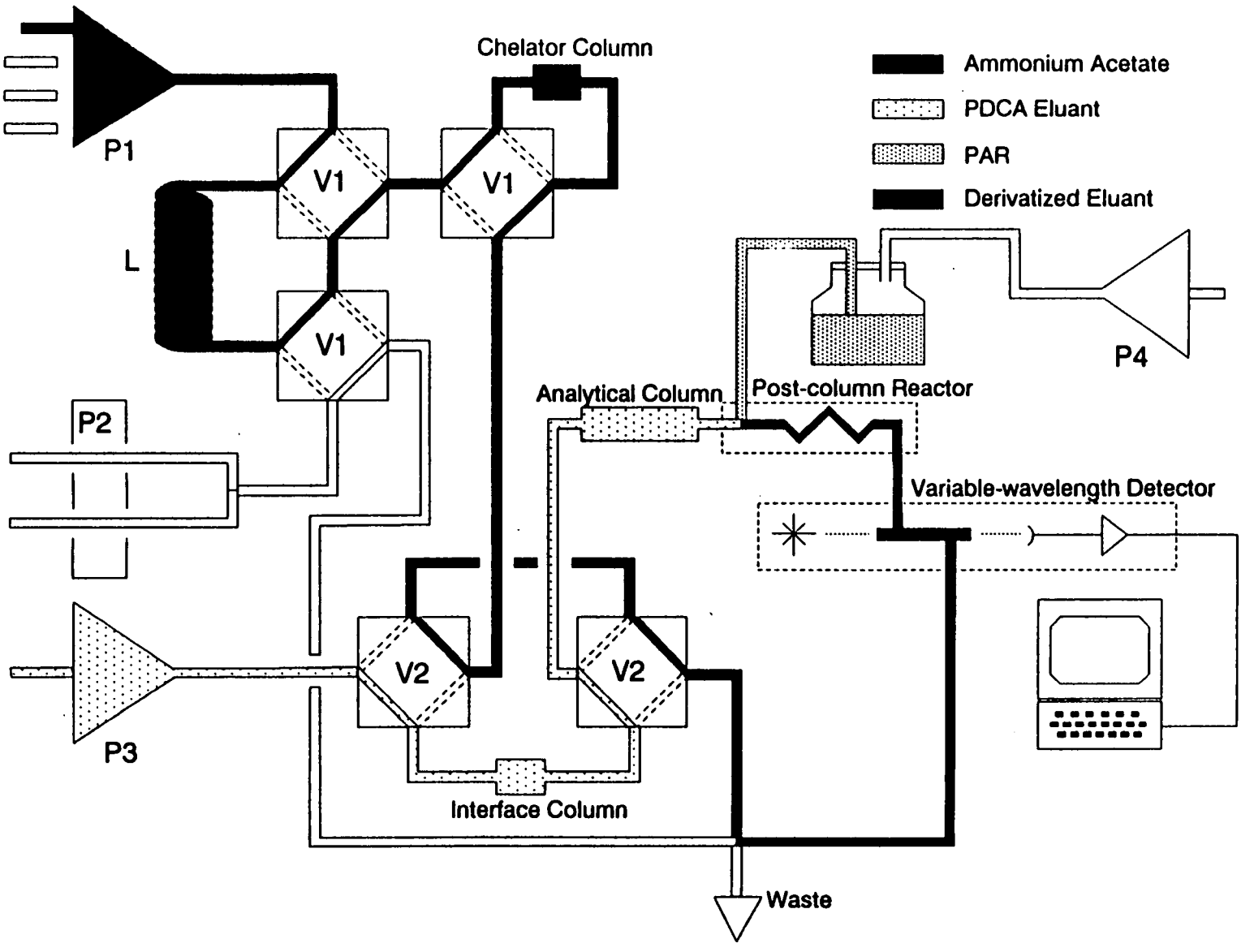

Figure 1(b). Chelation ion chromatograph in trace-element chelation configuration.

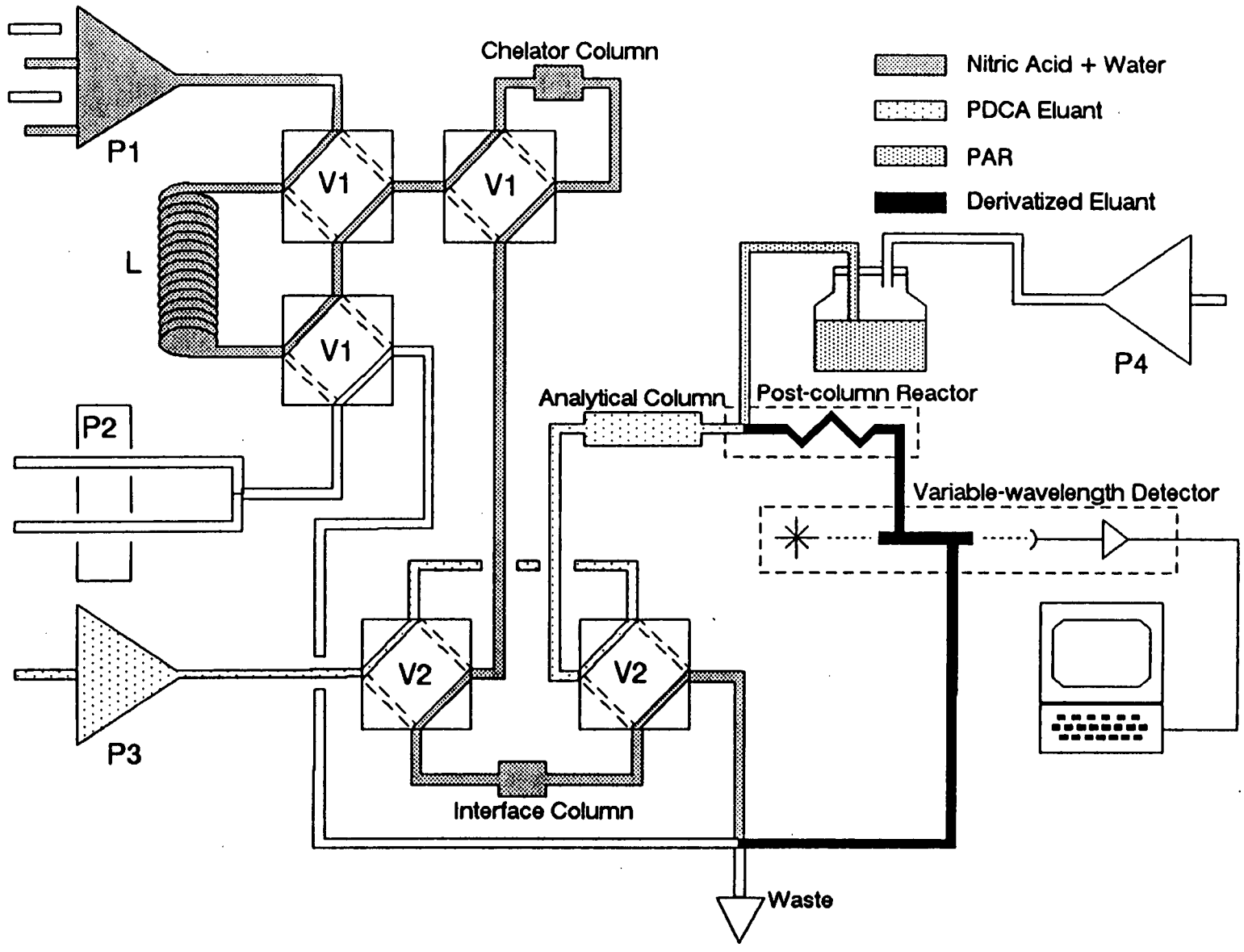

Figure 1(c). Chelation ion chromatograph configuration for elution of analytes to interface column.

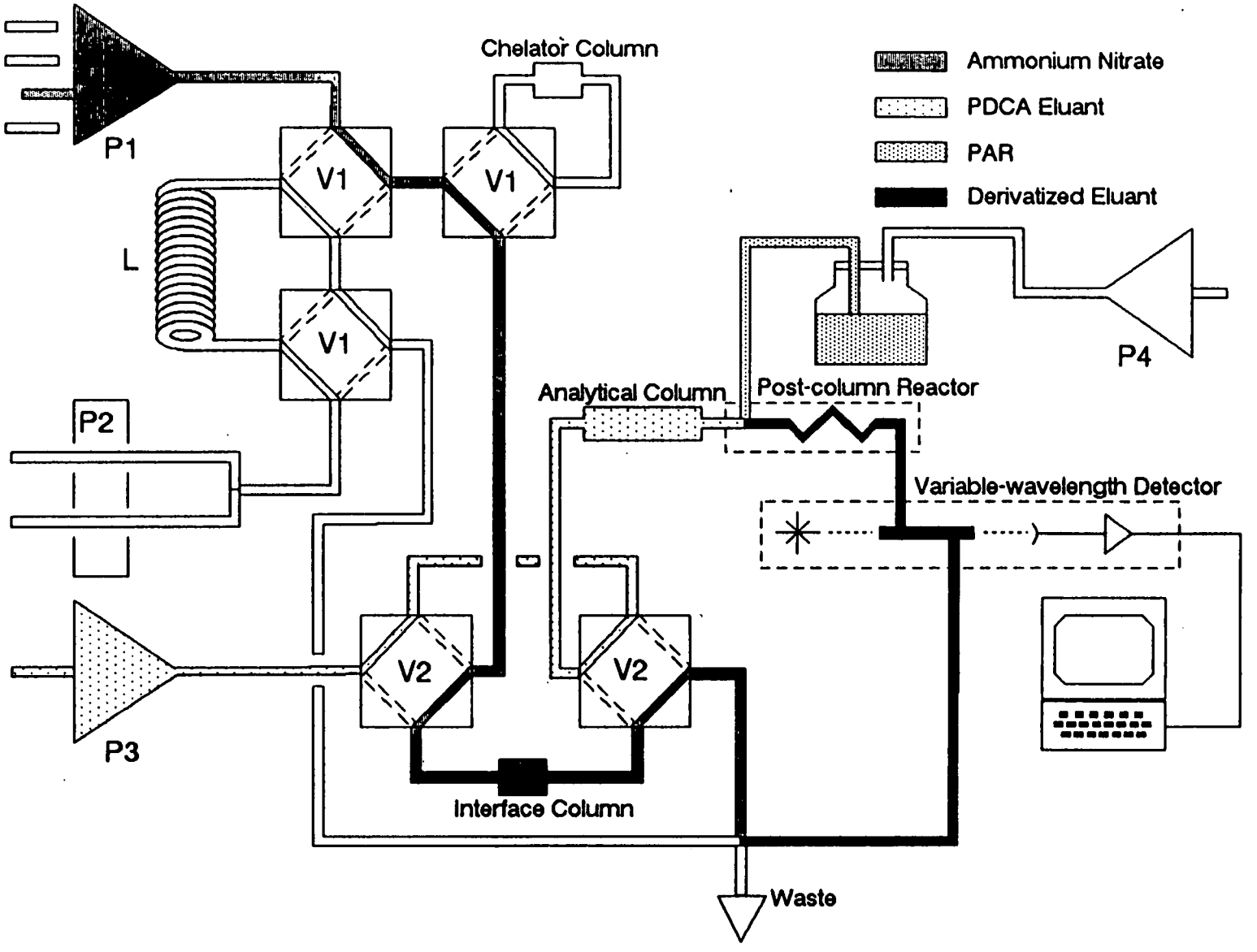

Figure 1(d). Chelation ion chromatograph configuration for conversion of interface column to ammonium form.

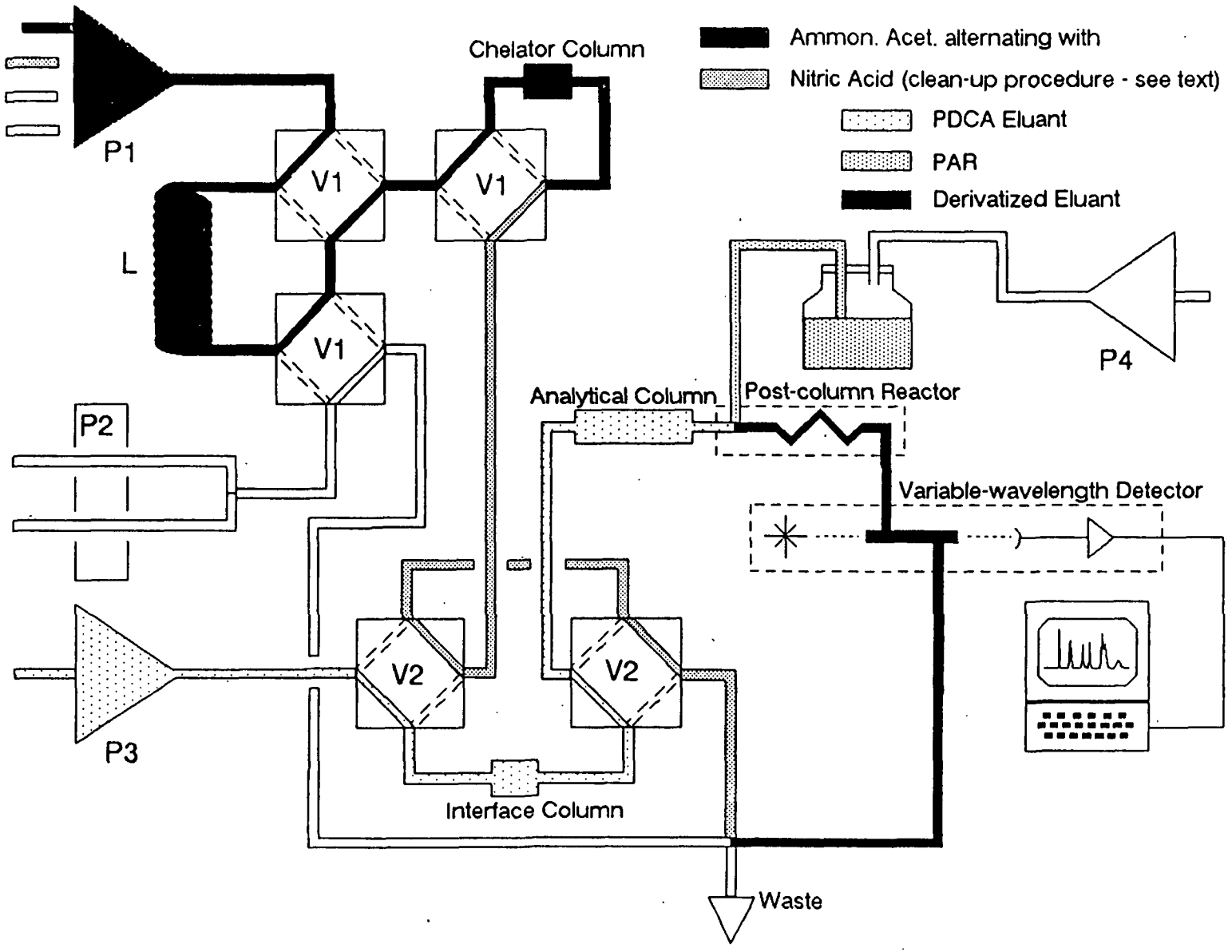

Figure 1(e). Chelation ion chromatograph configuration for analyte separation and chelator-column clean-up.

quartz concentrated nitric acid, acetic acid, and ammonia (Seastar, Sydney, B.C., Canada) was used throughout the study. 1.5 M nitric acid, 0.1 M ammonium nitrate, and approximately 2 M ammonium acetate (pH 5.5) were all prepared from the Seastar reagents. The ammonium acetate serves as both an eluant and as an on-line buffer solution in the method. This buffer, when mixed in a 1:1 ratio with samples of up to 3% (v:v) nitric acid, produces a sample solution with a pH of between 5 and 5.5. The eluant for the analytical column is $6*10^{-4}$ M pyridine-2,6-dicarboxylic acid (PDCA) (Dionex, Sunnyvale, CA), 0.040 M sodium hydroxide (Aldrich Chemicals, Milwaukee, WI), and 0.090 M acetic acid. The post-column derivatization reagent contains $5x10^{-4}$ M 4-(2-pyridylazo)resorcinol (PAR) monosodium salt, monohydrate (Dionex, Sunnyvale, CA), 1.0 M 2-dimethylamino ethanol (Aldrich Chemicals, Milwaukee, WI), 0.30 M sodium bicarbonate (Aldrich Chemicals, Milwaukee, WI), and 0.50 M ammonia.

Stock analyte solutions of cadmium, cobalt, copper, iron, manganese, nickel, and zinc were prepared from commercial standards (Spex Industries, Metuchen, NJ) in 1% (v/v) nitric acid.

A synthetic seawater solution prepared for a previous investigation (*2*) was used in this study. It had been prepared from sub-boiling, distilled-in-quartz sulfuric acid (J.T. Baker Chemicals, Phillipsburg, NJ), chloride salts of sodium, potassium, magnesium, and calcium with minimum purities of 99.99+% (Aldrich Chemicals, Milwaukee, WI), and nitric acid. This solution contains 10,560 mg/L sodium, 1270 mg/L magnesium, 400 mg/L calcium, 380 mg/L potassium, 21,000 mg/L chloride, and 880 mg/L sulfur, the matrix of a seawater sample acidified with 0.5% hydrochloric acid and 1% nitric acid. It was spiked with cadmium at a concentration of 250 μg/L and cobalt, copper, iron, manganese, nickel and zinc at 80 μg/L.

A working solution of ICAP-19 quality control sample (U. S. Environmental Protection Agency, Cincinnati, OH) was prepared by diluting 0.5 mL of the stock to 100 mL with 1% nitric acid. This sample contains 50 μg/L of each of the target analytes in a 1% nitric acid matrix. A Contract Laboratory Program Quarterly Blind Sample, QB390 Water II (U. S. Environmental Protection Agency, Las Vegas, NV) was diluted 10-fold with 0.8% nitric acid. The resulting solution has a matrix of 1% nitric acid. Standard Reference Material 1643b (National Institute of Standards and Technology, Gaithersburg, MD) was analyzed as received. It has a matrix of 3% (v:v) nitric acid.

SECTION 5

EXPERIMENTAL PROCEDURES

When valves V1 and V2 are in the "A" position [Figure 1(a)], acidified samples are pumped, at 4.0 mL/min., through one channel of a two-channel peristaltic pump. At the same time, 2 M ammonium acetate is pumped, at 4.0 mL/min., through the other channel of the peristaltic pump. The two solutions are combined in a mixing tee in a 1:1 ratio. This buffers the sample solution to a pH between 5 and 5.5. The buffered sample flows from the mixing tee, fills the sample loop (L), and flows to waste. The PDCA eluant flows continuously, at 1.0 mL/min., through the interface column to the analytical column.

Once the sample is loaded, at t = 0.0 minutes, the program on the gradient pump is initiated [Figure 1(b)]. Valve V1 is switched into the "B" position and the gradient pump sweeps the buffered sample onto the chelator column by passing 2 M ammonium acetate, at 3.0 mL/min., through the sample loop for 1.5 minutes. The transition metals and alkaline-earth metals are chelated by the iminodiacetate functional group in the chelator column. The 4.5 mL of ammonium acetate following the sample replaces most calcium and magnesium ions in the column with ammonium ions and passes to waste.

At t = 1.5 minutes, the gradient pump begins to pump a combination of 1.5 M nitric acid and water in a 1:2 ratio so that the final eluant solution is 0.5 M nitric acid. Nitric acid is pumped for 3.5 minutes. The nitric acid front reaches the chelator column at t = 3.7 minutes. At this time, valve V2 is switched to the "B" position [Figure 1(c)]. The nitric acid elutes the concentrated metals to the interface column. While valve V2 is in the "B" position, the PDCA eluant is diverted into a by-pass which sends it directly to the analytical column. At t = 5.0 minutes, 10.5 mL of 0.5 M nitric acid have been pumped into the sample loop. Now the gradient pump begins to pump ammonium nitrate in order to carry all of the nitric acid through the loop and chelator column to the interface column. Once this is accomplished, the analytes have been collected on the interface column, and that column has been converted to the hydronium form by the acid matrix used to elute the metals from the chelator column.

At t = 8.2 minutes, when all of the nitric acid has passed through the chelator column, valve V1

switches to the "A" position [Figure 1(d)]. The gradient pump continues to pump ammonium nitrate, but now it bypasses the chelator column and flows directly onto the interface column. The interface column is converted from the hydronium form to the ammonium form. This continues for 1.5 minutes.

With the interface column in the ammonium form, valve V1 switches to the "B" position and valve V2 switches back to the "A" position at t = 9.7 minutes. This occurs at t=9.7 minutes [Figure 1(e)]. The PDCA eluant returns to its route through the interface column, at which time it chelates the concentrated metals and carries them to the analytical column, where the chelates are separated. The separated metals are derivatized with 4-(2-pyridylazo)resorcinol (PAR), flowing at 0.5 mL/min., in the post-column reactor and are detected and quantified at 525 ± 5 nm using an absorbance detector.

At the same time, the gradient program begins a chelator column clean-up procedure in which the chelator column is flushed with 3 mL portions of 2 M ammonium acetate, 1.5 M nitric acid, 2 M ammonium acetate, and 1.5 M nitric acid. Finally, the gradient pump passes enough 2 M ammonium acetate (12.9 mL) through the loop and chelator column so that the column receives a minimum rinse of 6-mL of 2 M ammonium acetate. The program then terminates and the gradient pump ceases to pump. At the same time, the pump switches valve V1 to the "A" position so that a new sample may be loaded.

SECTION 6

RESULTS AND DISCUSSION

GENERAL METHOD PERFORMANCE

A representative chromatogram of a solution containing cobalt, copper, iron, manganese, nickel and zinc at a concentration of 80 μg/L and cadmium at 250 μg/L is shown in Figure 2. The separation requires approximately 12 minutes (allowing time for large manganese peaks to return to baseline), after slightly less than 10 minutes for preconcentration and matrix modification. An analysis sequence run with an autosampler would perform the chelator clean-up and the preconcentration and matrix modification of each sample during the separation of the previous sample. A separation could thus begin every 12 minutes.

The nickel and zinc peaks are not completely resolved in Figure 2, nor are the cobalt and cadmium peaks. The latter overlap is more problematic, because the later-eluting analyte of the pair, cadmium, is much less sensitive than cobalt. The implications of the overlap of the cobalt and cadmium peaks will be discussed in detail in the section on accuracy.

LINEARITY

The tested calibration range for all metals except cadmium was 0.8 to 250 μg/L using a 6.5-mL sample loop. The evaluated calibration range for cadmium was 2.5 to 800 μg/L. The curves are linear for each metal over the entire concentration range, which spans greater than two orders of magnitude. Calibrations by peak height yield correlation coefficients ranging from 0.9971 to 0.9999. Peak area calibrations have correlation coefficients ranging from 0.9991 to 0.9999. In all but the case of cobalt, calibration by area provide slightly higher correlation.

DETECTION LIMITS

The detection limits of the method were estimated using the 3σ criterion by analyzing seven acidified

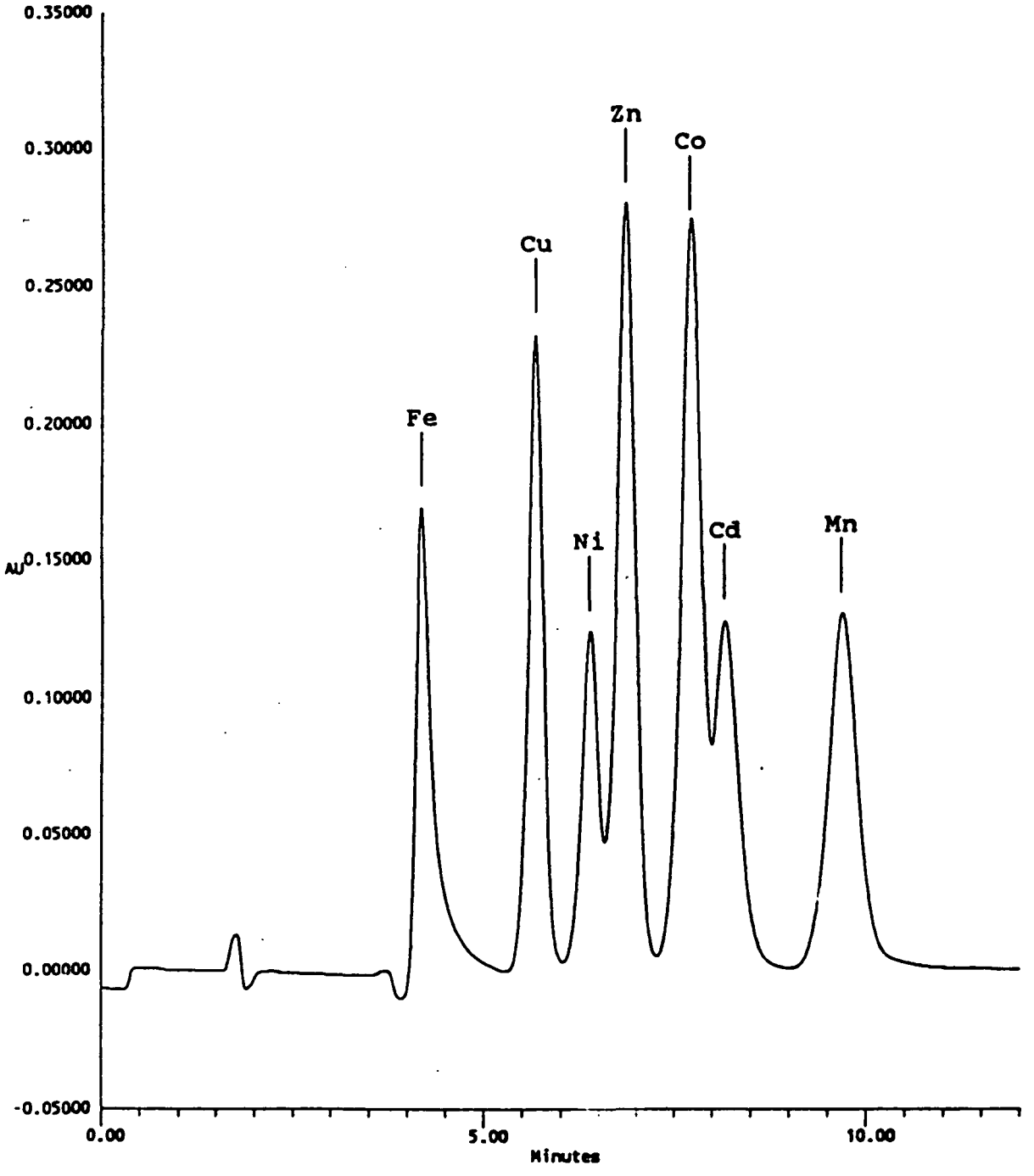

Figure 2. Chelation ion chromatogram of 80 μg/L cobalt, copper, iron, manganese, nickel, and zinc, and 250 μg/L cadmium.

reagent water blanks. Both a 6.5-mL and a 1.0-mL sample loop were used. When the 1.0-mL loop was used, the on-line buffer was made somewhat more basic and mixed 1+4 with the sample in the sample loop, in order to maximize the volume of sample concentrated. The resulting detection limits for both arrangements are given in Table 1.

TABLE 1. DETECTION LIMITS (μg/L, 3σ CRITERION, N=7)
BASED ON HEIGHT, AREA, AND SAMPLE SIZE

ANALYTE	HEIGHT		AREA	
	1 mL	6.5 mL	1 mL	6.5 mL
Cadmium[a]	0.25	0.42	0.16	0.30
Cobalt[a]	0.12	0.06	0.091	0.05
Copper	0.15	0.09	0.37	0.15
Iron	0.66	0.30	1.5	0.36
Manganese[a]	0.24	0.14	0.12	0.07
Nickel	0.37	0.13	0.089	0.14
Zinc	2.1	1.3[b]	2.7	1.1[b]

[a] Standard deviation of blank estimated to be the same as that of nickel.
[b] N = 6

Iron, copper, nickel, and zinc all gave rise to detectable peaks in the blanks. As a result, the detection limits for these metals are easily determined. Cadmium, cobalt and manganese yielded no measurable peaks in the blanks. Limitations of the ion chromatographic software make it difficult to determine statistical detection limits for these analytes. The software requires a detectable peak in order to return a concentration value for the blank. Ceiling values for detection limits for the elements which did not have measurable blank peaks are estimated based on their response factors and the standard deviation of the nickel blank. The nickel blank has been selected because it had the smallest blank, and its standard deviation would be expected to be more representative of the baseline uncertainty. Calculations based on either peak height or peak area yield similar detection limits.

The sensitivity of the method for each analyte should increase by a factor of 4 between the 1.0-mL sample loop and the 6.5-mL loop, taking into account the difference in dilution caused by the buffering procedures. In fact, the mean sensitivity of all the analytes increase by only 3.4. Also, more nitric acid and

ammonium nitrate is required to achieve optimal performance with the 6.5-mL loop. These results may be indicative of eluant mixing in the larger sample loop.

All of the detection limits in Table are analyte-blank limited; that is, the standard deviations of the blanks are determined by fluctuations in the sizes of the analyte peaks, not by base-line noise. This is supported by the fact that the detection limits for the 6.5-mL sample loop in Table 1 are not significantly lower than those for the 1.0-mL loop, even though the sensitivity increased by more than a factor of 3. The detection limits could therefore be improved by minimizing the size of the analyte peaks in the blank. Experimentation in conjunction with preconcentration ICP-MS indicate that the some of the analyte blank levels can be substantially reduced by directing the ammonium acetate eluant flow through a preliminary chelator before introduction to the primary chelation column. The implementation of such a system with the IC instrumentation will require substantial modification of the device configuration. Further work is planned in this area.

PRECISION

The precision of this technique was evaluated through multiple injections of multi-element standards at two concentration levels. Calculated concentrations based on both peak height and peak area were examined with respect to precision. The low concentration standard contained 8.0 μg/L cadmium and 2.5 μg/L of the other target analytes. The high concentration standard contained 800 μg/L cadmium and 250 μg/L of the each of the other six metals. Table 2 gives the precision, expressed as relative standard deviation, obtained for both standards. One point was rejected using Dixon's outlier test at the 95% confidence level (*4*), from the iron and the zinc peak height data, before calculating the standard deviations.

The precisions obtained through the measurement of peak area are inferior to that obtained by measuring peak height. This is attributed, in part, to the inability of the software to adequately define a representative boundary between some peaks. Further optimization of the integration parameters may improve this situation.

TABLE 2. PRECISION AS A FUNCTION OF SAMPLE CONCENTRATION AND QUANTITATION METHOD[a]

ANALYTE	2.50 μg/L HEIGHT	2.50 μg/L AREA	250 μg/L HEIGHT	250 μg/L AREA
Cadmium[b]	2.3	3.9	0.4	1.3
Cobalt	0.6	1.2	0.7	1.5
Copper	4.7	8.3	0.4	0.6
Iron	7.1	14.2	0.8[c]	1.3
Manganese	3.0	2.7	2.1	2.1
Nickel	3.2	2.9	1.6	1.9
Zinc	1.2[c]	5.7	1.1	1.2

[a] Percent relative standard deviation (N = 5).

[b] Concentrations of cadmium were 8.0 and 800 μg/L.

[c] N = 4

EFFECT OF HIGH SALINITY

The analysis of environmental samples is often hindered by the additive (usually spectral) and multiplicative (usually chemical or physical) interferences caused by high salinity. Chelation preconcentration has been shown to significantly reduce these interferences by removing most of the matrix elements from saline samples (*1-3*). The ability of the present method to minimize these interferences was tested. Seawater was chosen as the test matrix, since it has a higher total salt content than most waste digests, and since the present method might also be applied to monitoring ocean or estuarine waters.

A synthetic seawater solution was spiked with 250 μg/L cadmium and 80 μg/L of the other metals. This solution was analyzed to determine the effect of interferences from the alkali and alkaline-earth metals. The resulting chromatogram is shown in Figure 3. The recoveries are given in Table 3. With the exceptions of iron and zinc, the recoveries are all within ± 10% of the spike value. As the synthetic seawater solution was several months old, it is likely that the high values for iron and zinc were caused by contamination.

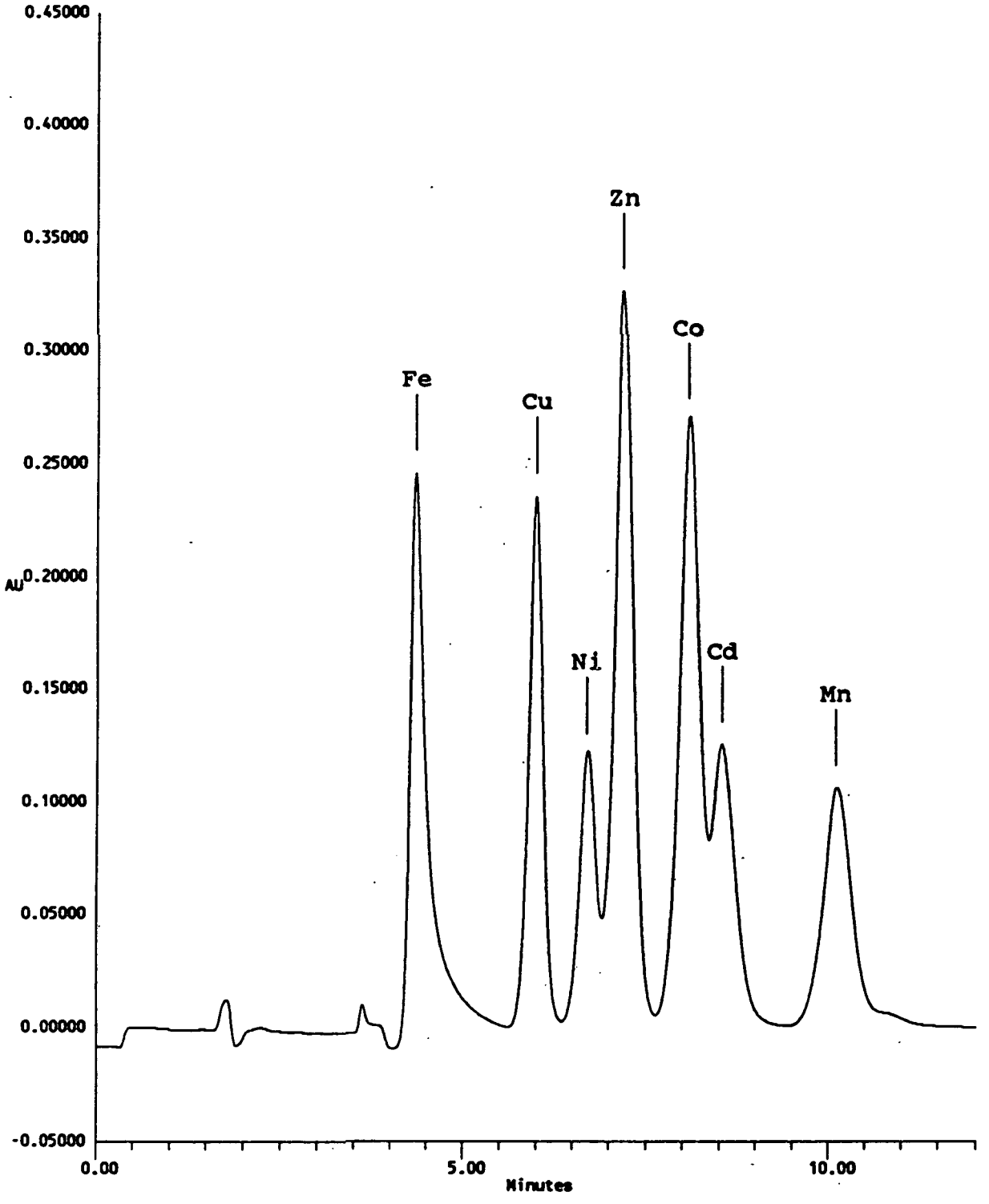

Figure 3. Chelation ion chromatogram of synthetic seawater spiked with 80 µg/L cobalt, copper, iron, manganese, nickel, and zinc, and 250 µg/L cadmium.

TABLE 3. RECOVERY OF ANALYTES FROM SYNTHETIC SEAWATER[a]

ANALYTE	HEIGHT %	AREA %
Cadmium	116	105
Cobalt	99	103
Copper	106	102
Iron	138	146
Manganese	96	94
Nickel	103	104
Zinc	137	129

[a] Cadmium = 460 µg/L, all others = 147 µg/L

ACCURACY

Three reference samples were analyzed in duplicate to evaluate the accuracy of the IC method. ICAP-19 was analyzed at a concentration level of 50 µg/L of each of the target analytes in a 1% nitric acid matrix. The results of those analyses are given in Table 4. NIST 1643b was analyzed without dilution, and the data are presented in Table 5. Each of the duplicate analysis recoveries is included to demonstrate short-term duplicate precision. The duplicates were analyzed about one hour apart. The results in Table 4 and Table 5 are given for calculations based on both peak height and peak area. Using the mean of the duplicate-pair results, both the height-based and the area-based recoveries are in the range of 86% to 104% for all analytes except cadmium and manganese.

Cadmium yields low recoveries for both samples. This is attributed to interference from cobalt, the peak of which immediately precedes and overlaps that of cadmium (Figure 2). Both ICAP-19 and NIST 1643b have approximately equal concentrations of cobalt and cadmium. This translates into a cobalt peak approximately six times higher than that of cadmium, given the greater sensitivity of the detection system for cobalt. When two unresolved peaks have disparate intensities, the chromatography software imposes an exponential decay of the larger of two peaks into the smaller one. This calculated contribution of cobalt to the cadmium peak is apparently overestimated in these samples, resulting in a calculated cadmium concentration that is lower than the actual. Conversely, cobalt concentration calculated on the basis of peak area is too high. The cobalt peak height and the concentration value derived from it are unaffected, since the

software does not extrapolate the cadmium peak to the cobalt retention time. Because the cobalt decay affects both the apparent height and area of the cadmium peak, the cadmium recovery is too low in either case.

Manganese, though well resolved from the other analytes, suffers an unidentified interference in the analysis of NIST 1643b. Since the interference appears in the tailing end of the manganese peak, the recovery is once again most affected when measuring peak area.

A quarterly blind sample, QB390 Water II, which was prepared at the Environmental Monitoring Systems Laboratory in Las Vegas, was analyzed in duplicate and a third sample was spiked to a level of 500 µg/L cadmium and 160 µg/L of the other metals. Table 6 presents the results of those analyses. There is no cobalt in this sample, so the cadmium recoveries are not affected by the overlapping cobalt peak. All of the original and spike recoveries in Table 6 are within acceptable quality control limits, except the iron spike recovery based on peak height. The concentration of iron in the spiked sample is nearly 3 times the tested upper limit of linearity of the method.

TABLE 4. ANALYSIS OF ICAP-19

ANALYTE	TRUE mg/L	HEIGHT FOUND mg/L	HEIGHT RECOVERY %	AREA FOUND mg/L	AREA RECOVERY %
Cadmium	0.94	0.69	73	0.56	59
		0.69	74	0.58	61
Cobalt	1	0.93	93	1.03	103
		0.94	94	1.05	105
Copper	1.03	0.98	95	0.95	92
		1.01	98	0.98	95
Iron	1.02	0.90	88	0.86	85
		0.98	96	0.93	91
Manganese	1.02	0.94	92	0.86	84
		0.96	94	0.90	88
Nickel	1.02	1.03	101	1.03	101
		1.04	102	1.05	103
Zinc	1.01	1.03	102	0.96	95
		1.05	104	0.98	98

TABLE 5. ANALYSIS OF NIST 1643b

ANALYTE	TRUE	HEIGHT		AREA	
		FOUND	RECOVERY	FOUND	RECOVERY
	µg/L	µg/L	%	µg/L	%
Cadmium	20	11.4	57	11.3	57
		12.1	60	11.5	57
Cobalt	26	26.6	102	29.1	112
		26.5	102	28.8	111
Copper	21.9	23.3	106	23.2	106
		22.8	104	23.0	105
Iron	99	101.2	102	92.8	94
		95.7	97	91.5	92
Manganese	28	30.3	108	32.0	114
		28.6	102	30.6	109
Nickel	49	50.3	103	48.6	99
		51.1	104	49.6	101
Zinc	66	72.4	110	68.4	104
		70.8	107	67.5	102

TABLE 6. ANALYSIS OF QB390W2

ANALYTE	TRUE	HEIGHT		AREA	
		SAMPLE	SPIKE	SAMPLE	SPIKE
	µg/L	%	%	%	%
Cadmium	28	107	115	117	110
		105		111	
Cobalt	0	U[a]	109	U	112
		U		U	
Copper	125	101	112	109	108
		103		110	
Iron	525	90	66	98	109
		90		98	
Manganese	74	94	110	85	114
		90		81	
Nickel	0	U	114	U	112
		U		U	
Zinc	90	101	103	104	105
		103		104	

[a] U = undetected

SINGLE COLUMN VARIANT

A single-column variation on this method, using only the analytical column, was investigated in order to efficiently determine the effects of eluant parameters on the separation. A number of common eluant systems were evaluated with the objective of separating lead and cadmium from the other metals and increasing the sensitivity for these two analytes. There is also some interest in using the single-column variation of this technique as a simple, field-transportable method with high sample throughput capability and high µg/L detection limits.

Separations were attempted on this column with PDCA, oxalic acid, and mixed tartaric and citric acid eluant systems. None of these systems performed completely satisfactorily. The oxalic acid eluant precludes the determination of iron. At the same time, the sensitivity for lead was somewhat improved with such a

system. Preliminary work has been done with the tartrate/citrate system. The sensitivity is quite low for some metals, however, and the analysis time is quite long. The most promising work has centered around the PDCA system.

Sensitivity for some metals can be improved by varying the concentration of the PDCA and the eluant pH. Retention times with PDCA eluant decrease with increasing PDCA concentration and with increasing pH. Some metals are quite sensitive to the concentration ratio of the PAR to PDCA. A decrease in the PDCA concentration increased response for some metals, including lead. The lower PDCA concentration resulted in longer analysis times, but this effect was offset by increasing the pH. At low concentrations of PDCA, however, iron became non-linear and began to tail. This tailing interfered with copper determinations.

Since many analyses require the acid digestion of samples prior to analysis, it is desirable to use an eluant system which will perform well with acidic samples. The single-column system with the PDCA eluant used in the three-column system provides reasonably good separations of cobalt, copper, iron, manganese, nickel, and zinc in 1% nitric acid in samples volumes up to 1 mL. The direct introduction of large volumes of acid does have deleterious effects on the background, however, and makes data integration difficult. The sensitivity for lead is still quite poor in this system. Additionally, the lead peaks tend to tail and split with increasing metal concentration.

Other schemes to improve sensitivity for lead and cadmium have not been entirely successful. These included the addition of various modifiers to the PDCA eluant and changes in the post-column chemistry (*5*). The PAR/ZnEDTA approach used by others (*6,7*) appeared to increase sensitivity somewhat, but the system was unstable and no further work has been attempted along those lines.

The use of the analytical column without matrix modification was prone to interferences from matrix elements. While sodium and potassium at 100 mg/L produced little interference, calcium and magnesium did appear in the chromatograms. Calcium eluted relatively early, and did not directly interfere with any of the transition metals. Magnesium was more strongly retained and was prone to elute during subsequent analyses.

REFERENCES

(1) Siriraks, A.; Kingston, H. M.; Riviello, J. M. *Anal. Chem.* **1990**, *62*, 1185-1193.

(2) Heithmar, E. M.; Hinners, T. A.; Rowan, J. T.; Riviello, J. M. *Anal. Chem.* **1990**, *62*, 857-864.

(3) Rowan, J. T.; Heithmar, E. M. "Preconcentration Method for Inductively Coupled Plasma-Mass Spectrometry"; EPA 600/4-89/043; U. S. Environmental Protection Agency: Las Vegas, Nevada, 1989.

(4) Wernimont, G. T. In *Use of Statistics to Develop and Evaluate Analytical Methods*; Spendley, W. Ed.; Association of Official Analytical Chemists: Arlington, Virginia, 1985; p. 96.

(5) Rubin, R. B.; Heberling, S. S. *Am. Lab.* **1987**, *19*, 46-55.

(6) Arguello, M. D.; Fritz, J. S. *Anal. Chem.* **1977**, *49*, 1595-1598.

(7) Jezorek, J. R.; Freiser, H. *Anal. Chem.*, **1979**, *51*, 373-76.

APPENDIX A

METHOD 6060

ION CHROMATOGRAPHY OF TRACE METALS

NOTICE

This document is a preliminary draft. It has not been formally released by the U.S. Environmental Protection Agency and should not at this stage be construed to represent Agency policy. It is being circulated for comments on its technical merit and clarity. Mention of trade names or commercial products does not constitute endorsement or recommendation for use.

1.0 SCOPE AND APPLICATION

1.1 Method 6060 is used in the determination of µg/L concentrations of the following trace metals (Table 1) in aqueous solution.

TABLE 1A. METALS DETERMINED BY METHOD 6060

Analyte	CAS Number	Detection Limits[a]
Cadmium	7440-43-9	0.4
Cobalt	7440-48-4	0.06
Copper	7440-50-8	0.09
Iron	7439-89-6	0.3
Manganese	7439-96-5	0.14
Nickel	7440-02-0	0.13
Zinc	7440-66-6	1.3

[a] µg/L, 6.5 mL sample

1.2 The method is limited to the determination of free, hydrated metal ions in aqueous solutions. Therefore, samples must be digested and the digests filtered prior to analysis. The method is applicable to acid digests from Methods 3010, 3020, and 3050.

1.3 Detection limits of this method range from 0.2 to 1 ng. The range of concentrations that may be determined will vary with the volume of sample analyzed, which typically ranges from 1 to 25 mL.

2.0 SUMMARY OF METHOD

2.1 In the chelation step, analytes are concentrated from a neutralized aqueous solution in a column containing a macroporous iminodiacetate chelating resin. This resin has a high affinity for many metals existing as polyvalent cations in solution. Matrix modification using ammonium acetate results in the elution of alkali metals, alkaline-earth metals and anions, for which the resin has relatively low affinity. The trace elements are then eluted from the chelator column with 0.5 M nitric acid.

2.2 The highly acidic eluate from the chelator column is incompatible with the low-capacity analytical column. An intermediate, high-capacity column, which contains a fully sulfonated cation-exchange resin with sufficient capacity to retain metal ions under acidic conditions, is used as an interface between the chelator column and the analytical column.

2.3 After the analytes are collected on the interface column, the hydronium form of the resin is converted to the ammonium form by passing ammonium nitrate through the interface column. The analytes are then eluted from the interface column to the analytical column with pyridine-2,6-dicarboxylic acid (PDCA). The metal-PDCA complexes are separated on an analytical column with both anion-exchange and cation-exchange properties.

2.4 The separated metals are derivatized with 4-(2-pyridylazo)resorcinol (PAR) in a post-column reactor and are detected photometrically with an absorbance detector at 520-530 nm. The metals are identified by their retention times compared to known standards. Quantitation is based on comparison of the sample peak height (or area) to a calibration curve generated from standards.

3.0 INTERFERENCES

3.1 The extent of interference from alkali and alkaline-earth metals depends largely on the timing of the chelation procedure. Sufficient quantity of ammonium acetate must be used for the elution of matrix ions from the chelator column, prior to the elution of the trace elements to the interface column with nitric acid.

3.2 Organic ligands native to the sample may interfere with the chelating resin and reduce recovery.

The digestion procedure must be adequate to destroy these ligands.

3.3 Interference due to carry-over must be kept at a minimum by running blanks after highly concentrated samples and by using an efficient rinse procedure on the chelator column.

3.4 Interferences can be caused if one or several components are present at high concentrations.

3.4.1 High concentrations of one or more polyvalent metals can interfere with the chelation of minor constituents by competing for chelation sites on the chelator resin. This type of interference may sometimes be reduced by diluting the sample, depending on the concentrations of the other analytes.

3.4.2 High concentrations of one or more of the metals separated in the analytical column can make quantitation of nearby small peaks difficult.

3.5 Large variations in acid concentration may result in decreased recovery of some analytes by affecting the final sample pH after on-line buffering. Samples with very high acid content must be partially neutralized before loading to a point where the on-line buffer can adjust the final pH to between 5.0 and 5.7.

4.0 APPARATUS AND MATERIALS

4.1 Ion Chromatograph: The Ion Chromatograph should be plumbed with 1/8" teflon, polyethylene or other inert tubing as shown in Figure 1. There should be no metal in the flow path. Required components are:

4.1.1 **Pumps:** Four constant-flow pumps. Where appropriate, the use of pressurized eluant reservoirs is recommended to aid in pumping.

4.1.1.1 **Eluant pump (P1):** Constant-flow, programmable, gradient pumping system capable of delivering eluants (see Table 4) from four reservoirs (denoted E1-E4). The pump should be capable of operating in the range 0-1000 psi at 0-3 mL/min.

4.1.1.2 **Sample pump (P2):** Two-channel peristaltic pump with mixing tee (T1). One channel of the pump (P2a) is used to pump the sample. A second channel (P2b) is used to

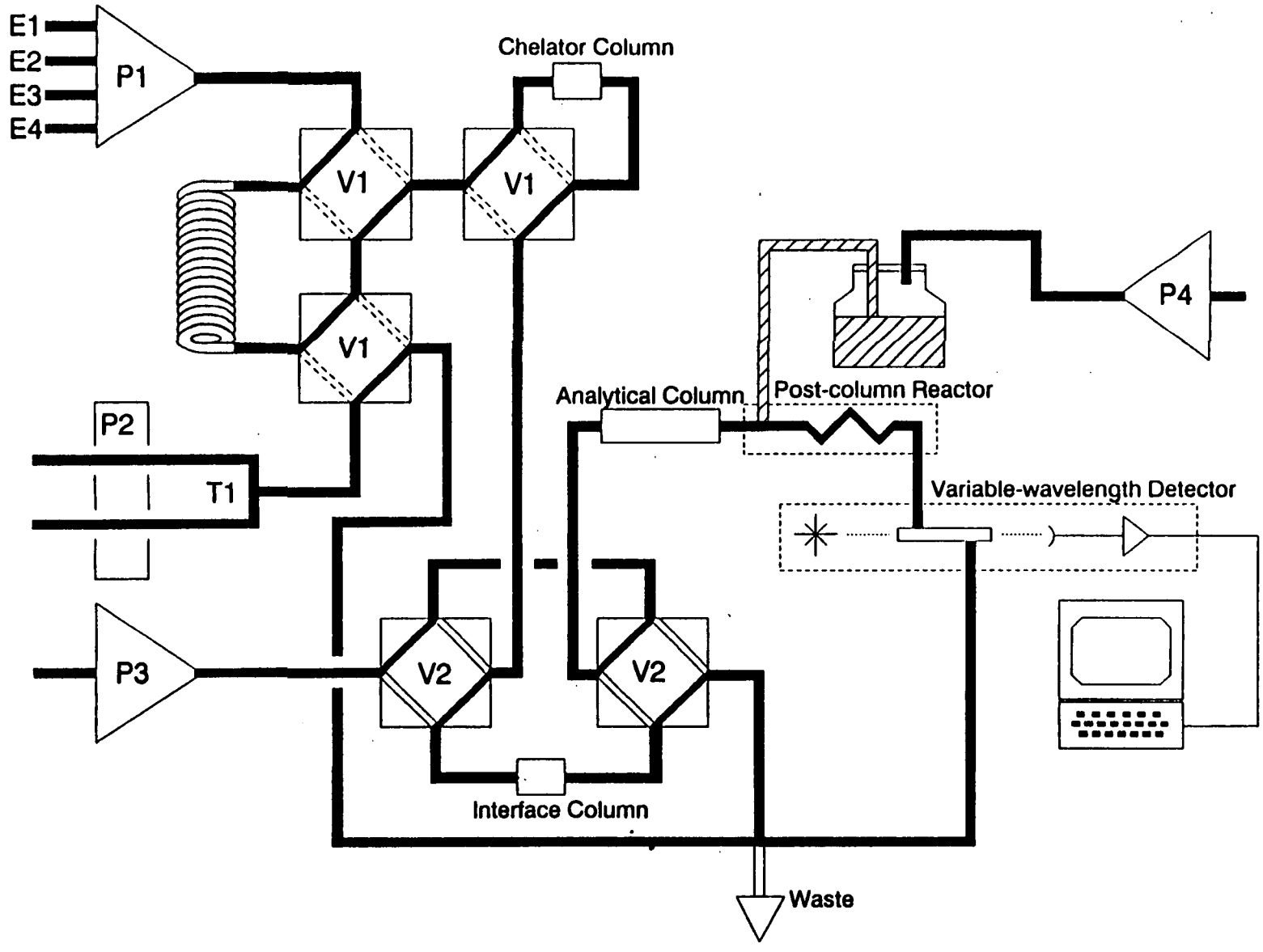

Figure 1A. Chelation ion chromatograph in sample loading configuration. P1 = high-pressure gradient pump, P2 = two-channel peristaltic pump, P3 = reciprocating single-piston pump, P4 = pneumatic pump. V1 = valve 1, V2 = valve 2. Valves are shown in the 'B' position.

pump an ammonium acetate buffer solution, at a flow equal to that of the sample, to adjust the sample pH on-line prior to injection.

4.1.1.3 **Analytical pump (P3):** Isocratic, constant-flow pump used to pump eluant through the analytical column. The pump should be capable of operating in the range 0-1000 psi at 1 mL/min.

4.1.1.4 **Reagent pump (P4):** Isocratic, constant-flow pump used to pump post-column derivatization reagent. The pump should have very little pulsation and be capable of operating in the range 0-200 psi at 0.5-1 mL/min.

4.1.2 **Columns:** Three chromatographic columns.

4.1.2.1 **Chelator Column (C1):** Macroporous iminodiacetate-functionalized chelating resin column (Dionex MetPac CC-1 or equivalent).

4.1.2.2 **Interface Column (C2):** High-capacity, cation-exchange column (Dionex TMC-1 or equivalent).

4.1.2.3 **Analytical Column (C3):** Low capacity, mixed-bed ion-exchange column (Dionex CS5 or equivalent).

4.1.3 **Valves:** Two independent column-switching valves.

4.1.3.1 **Chelator valve (V1):** A twelve-port (or equivalent) column-switching valve that controls the sample loading and injection, as well as eluant distribution to the chelator and interface columns.

4.1.3.2 **Separator valve (V2):** An eight-port (or equivalent) column-switching valve that controls the separation and detection system.

4.1.4 **Sample loop:** A length of inert tubing sized to provide the desired sample volume.

4.1.5 **Post-column reactor:** Mixing tee, or membrane reactor, and reaction coil. Must be compatible with flows from 0 to 2 mL/min.

4.1.6 **Detector:** Flow-through, low-volume, absorbance detector capable of monitoring 520-530 nm with a maximum time constant of 1 second.

4.1.7 **Control and data acquisition system:** At a minimum, recorder or integrator compatible with the detector output with a full-scale response of two seconds or less, and an automated controller for the column-switching valves. Alternatively, a computer-based system may be used.

5.0 REAGENTS

5.1 In the determination of trace elements, containers can introduce either positive errors by contributing contaminants through leaching or surface desorption, or negative errors by depleting concentrations through adsorption or absorption. Given the high sensitivity of this technique, it is recommended that all vessels used for containment of reagent solutions be constructed of linear polyethylene or Teflon. The use of glass is not recommended. To minimize contamination, these vessels should be treated in the manner recommended for sample containers in Chapter Three, Section 3.1.3, prior to use.

NOTE: Do not introduce foreign objects (magnetic stirring bars, pH electrodes, pH paper, etc.) into any solutions to be used in the course of this Method. If solution characteristics, such as pH or temperature, are required, a small amount of solution should be separated for the measurement and then discarded.

5.2 All reagents used in the preparation of samples, standards, and eluants should be of the highest purity available.

5.3 Water: Deionized water prepared from purified (by distillation or reverse osmosis) feed water is recommended. Conductance of water should be at least 16 megohm-cm.

5.4 Nitric Acid (1% v:v), HNO_3: To 500 mL water, add 10 mL concentrated (65%) HNO_3. Dilute to 1 liter.

5.5 Eluants: Prepare eluants directly in eluant containers.

5.5.1 **Nitric Acid (1.5 M), HNO_3:** Prepare in a fume hood. Dilute 145 g concentrated (65%) nitric acid to 1000 mL with water.

5.5.2 **Ammonium Acetate Buffer (approximately 2 M):** Prepare in a fume hood. To 600 mL water, add 115 mL glacial acetic acid and 130 mL 25% ammonia solution. Adjust the pH to 5.5 ± 0.1 with small quantities (3 to 5 mL) of either acetic acid or ammonia, as necessary. Dilute to 1 liter.

5.5.3 **Ammonium Nitrate (0.10 M), NH_4NO_3:** To 200 mL water, add 8.9 g concentrated (65%) nitric acid and 7.0 g 25% ammonia solution. Dilute to 1 liter. Adjust the pH to 3.4 ± 0.3 with small quantities of either nitric acid or ammonia, as necessary.

5.5.4 **Pyridine-2,6-dicarboxylic acid (PDCA) eluant [PDCA (0.006 M), $C_7H_5NO_4$; Sodium hydroxide (0.040 M), NaOH; Acetic acid (0.090 M), $C_2H_4O_2$]:** Combine 100 g PDCA stock solution (5.5.4.1) with 100 g acetic acid stock solution (5.6.4.2). Dilute to 1 liter. The final pH should be 4.6.

5.5.4.1 **Pyridine-2,6-dicarboxylic acid (PDCA) stock [PDCA (0.06 M), $C_7H_5NO_4$); Sodium hydroxide (0.40 M), NaOH]:** Dissolve 15.9 g sodium hydroxide (NaOH) in 200 mL water. Add 10.0 g PDCA. Mix until PDCA dissolves. Dilute to 1 liter.

5.5.4.2 **Acetic acid (0.90 M), $C_2H_4O_2$:** To 200 mL water, add 54.2 g glacial acetic acid. Dilute to 1 liter.

5.6 Post-column Derivatization Reagent [4-(2-pyridylazo) resorcinol (PAR) ($5x10^{-4}$ M), $C_{11}H_9N_3O_2$; 2-dimethylamino ethanol (1.0 M), $C_4H_{11}NO$; Ammonia (0.50 M), NH_3; Sodium Bicarbonate (0.30 M), $NaHCO_3$]: To 200 mL water, add 34.0 g 25% ammonia solution. Add 0.12 g monosodium 4-(2-pyridylazo) resorcinol monohydrate and mix. When the PAR has completely dissolved, add 500 mL water. Add 89.1 g 2-dimethylamino-ethanol. Finally, add and dissolve 25.2 g sodium bicarbonate, dilute the solution to 1 liter, and mix thoroughly.

5.7 Stock Solutions: Solutions used for the preparation of calibration standards may be obtained commercially or prepared as follows.

(CAUTION: Many metal salts are extremely toxic if inhaled or swallowed. Wash hands thoroughly after handling.)

5.7.1 **Cadmium solution, stock, 1000 mg/L:** Dissolve 1.142 g CdO in a minimum amount of (1+1) HNO_3. Heat to increase rate of dissolution. Add 10.0 mL concentrated HNO_3 and dilute to 1 liter.

5.7.2 **Cobalt solution, stock, 1000 mg/L:** Dissolve 1.000 g of cobalt metal in a minimum amount of (1+1) HNO_3. Add 10.0 mL concentrated HNO_3 and dilute to 1 liter.

5.7.3 **Copper solution, stock, 1000 mg/L:** Dissolve 1.000 g of copper metal in a minimum amount of (1+1) HNO_3. Add 10.0 mL concentrated HNO_3 and dilute to 1 liter.

5.7.4 **Iron solution, stock, 1000 mg/L:** Dissolve 1.000 g of iron metal in a minimum amount of (1+1) HNO_3. Add 10.0 mL concentrated HNO_3 and dilute to 1 liter.

5.7.5 **Manganese solution, stock, 1000 mg/L:** Dissolve 3.149 g of manganese acetate ($Mn(C_2H_3O_2)_2$) in water. Add 10.0 mL of concentrated HNO_3 and dilute to 1 liter.

5.7.6 **Nickel solution, stock, 1000 mg/L:** Dissolve 1.000 g of nickel metal in 10 mL hot conc. HNO_3. Cool and dilute to 1 liter.

5.7.7 **Zinc solution, stock, 1000 mg/L:** Dissolve 1.245 g zinc oxide (ZnO) in a minimum amount of dilute HNO_3. Add 10.0 mL of conc. HNO_3 and dilute to 1 liter.

5.8 Working Standards

5.8.1 **Stock standards:** Prepare a mixed stock standard by adding the volumes of stock solutions shown in Table 2 to approximately 50 mL water, adding 5.0 mL concentrated HNO_3 to each, and finally diluting each to 100 mL. Fresh mixed stock standard should be prepared each week.

TABLE 2A. STOCK STANDARD

Metal	mL Stock	Concentration[a]
Cadmium	3.3	33
Cobalt	1.0	10
Copper	1.0	10
Iron	1.0	10
Manganese	1.0	10
Nickel	1.0	10
Zinc	1.0	10

[a] mg/L

5.8.2 **Calibration standards:** Prepare the six calibration standards in Table 3 from the mixed

stock standard. Calibration standards should be prepared daily.

TABLE 3A. CALIBRATION STANDARD CONCENTRATIONS (μg/L)

Metal	Standard 1	2	3	4	5	6
Cadmium	2.60	8.2	26.4	82.5	264.0	825.0
Cobalt	0.80	2.5	8.0	25.0	80.0	250.0
Copper	0.80	2.5	8.0	25.0	80.0	250.0
Iron	0.80	2.5	8.0	25.0	80.0	250.0
Manganese	0.80	2.5	8.0	25.0	80.0	250.0
Nickel	0.80	2.5	8.0	25.0	80.0	250.0
Zinc	0.80	2.5	8.0	25.0	80.0	250.0

5.8.2.1 Prepare calibration standard 6 by diluting 2.5 mL of the mixed stock standard to 100 mL with 1% HNO_3.

5.8.2.2 Prepare calibration standard 5 by diluting 0.8 mL of the mixed stock standard to 100 mL with 1% HNO_3.

5.8.2.3 Prepare calibration standard 4 by diluting 0.25 mL of the mixed stock standard to 100 mL with 1% HNO_3.

5.8.2.4 Prepare calibration standard 3 by diluting 80 μL of the stock mixed standard to 100 mL with 1% HNO_3.

5.8.2.5 Prepare calibration standard 2 by diluting 1 mL of standard 6 to 100 mL with 1% HNO_3.

5.8.2.6 Prepare calibration standard 1 by diluting 1 mL of standard 5 to 100 mL with 1% HNO_3.

5.9 Calibration blank: Add sufficient concentrated nitric acid to water to match the acid content of the samples.

6.0 SAMPLE COLLECTION, PRESERVATION, AND HANDLING

6.1 All samples must be collected using a sampling plan which addresses the considerations discussed in Chapter Nine of this Manual, as well as Practice D1066, Specifications D1192, or Practice 3370 of the ASTM Methods.

6.2 Polyethylene sample containers should be used, since glass can contribute significantly to increases of blank values. All sample containers should be washed with detergent, acids, and Type II water prior to use. See Chapter Three, Section 3.1.3, for further details.

6.3 Aqueous samples should be preserved with nitric acid to a pH less than 2 as soon as possible. If dissolved metal concentrations are desired, the aqueous samples should be filtered through a 0.45 μm filter prior to acidification. A suitable digestion procedure should be used for all samples prior to analysis to ensure that the metals are 'free' in solution and are not bound by organic materials such as fulvic and humic acids. Methods 3010, 3020, and 3050 of this manual are acceptable digestions. All digests should be filtered prior to analysis to protect the pre-concentration columns.

6.4 Samples should be analyzed as soon as possible after sampling (See Chapter Three, Section 3.1.3).

7.0 PROCEDURE

7.1 System Start-up:

7.1.1 Activate the data acquisition system.

7.1.2 Turn on the analytical pump and set the PDCA flow to 1.0 mL/min.

7.1.3 Turn on the reagent pump and set the PAR flow to 0.5 mL/min.

7.1.4 Turn on the absorbance detector. Select a wavelength of 530 nm. Turn on the visible lamp and set the detector to a full-scale sensitivity of 0.2 Absorbance Units Full Scale (AUFS). Equilibrate the system until the baseline is stable.

7.1.5 Set V1 and V2 to the 'A' position.

7.1.6 Start the sample pump. Select the sample flow rate to equal the on-line buffer flow. To conserve buffer, both the sample and buffer lines may remain in 1% nitric acid when not loading sample.

7.2 System operation: The chromatographic procedure is summarized in Table 4. The timing presented in the Table is specific to the use of a 6.5-mL sample loop and will vary with loop volume. The timing may also vary slightly with the volume of the tubing used in plumbing the apparatus.

TABLE 4A. ION CHROMATOGRAPHY SEQUENCE[a]

Time (min)	V1[b]	V2	Pump Channel	Solution	Flow (mL/min)
18.0+	A	A	P2	Sample (P2a) + buffer (P2b)	4.0/4.0
0.0	B	A	E1	2 M ammonium acetate	3.0
1.5	B	A	E2/E3 (1/2)	1.5 M nitric acid / water	3.0
3.7	B	B	E2/E3 (1/2)	1.5 M nitric acid / water	3.0
5.0	B	B	E4	0.1 M ammonium nitrate	3.0
8.2	A	B	E4	0.1 M ammonium nitrate	3.0
9.7	B	A	E1	2 M ammonium acetate	3.0
10.7	B	A	E2	1.5 M nitric acid	3.0
11.7	B	A	E1	2 M ammonium acetate	3.0
12.7	B	A	E2	1.5 M nitric acid	3.0
13.7	B	A	E1	2 M ammonium acetate	3.0
18.0	A	A	E1	2 M ammonium acetate	0.0
Repeat as necessary (see Section 7.2.8).					

[a] Vary as necessary (see Section 7.2).

7.2.1 **Load sample:** With V1 and V2 in the 'A' position, pump sample solution through the sample loop to waste. Check the pH of the solution as it goes to waste to ensure that the sample pH is 5.5 ± 0.3. This step is carried out before the analysis sequence is initiated and can be performed for subsequent samples before the analytes of the previous sample elute.

7.2.2 **Inject sample:** Switch V1 to the 'B' position. Pump 2 M ammonium acetate from the eluant pump for 1.5 minutes at 3.0 mL/min. Group IA and IIA metals, as well as anions, are eluted to waste.

7.2.3 **Elute concentrate:** Pump 1.5 M HNO_3 and water in a ratio of 1:2 (0.5 M HNO_3 final concentration) from the eluant pump at 3.0 mL/min for 3.5 minutes. After 2.2 minutes, switch V2

to the 'B' position so that the eluted concentrate will be directed to the interface column.

7.2.4 **Flush loop:** Pump 0.1 M ammonium nitrate from the eluant pump at 3.0 mL/min to push the 0.5 M HNO_3 through the sample loop to the chelator column. Continue for 3.2 minutes.

7.2.5 **Modify interface column:** Switch V1 to the 'A' position. Pump 0.1 M ammonium nitrate at 3.0 mL/min for 1.5 minutes. The interface column is converted from the hydronium form to the ammonium form.

7.2.6 **Elute analytes:** Switch V1 to the 'B' position and V2 to the 'A' position. Begin data acquisition. Analytes are stripped off the interface column with PDCA and are separated as anionic chelates on the analytical column. Separation times range from 12 to 16 minutes.

7.2.7 **Rinse and recondition chelator column:** Cycle the eluants at 3 mL/min through the chelator column in 1.0-minute increments in the following order: 2 M ammonium acetate, 1 M nitric acid, 2 M ammonium acetate, and finally 1 M nitric acid. Pump 2 M ammonium acetate at 3.0 mL/min. for 4.3 minutes in order to flush the foregoing eluants through the sample loop and to recondition the column with 6 mL of 2 M ammonium acetate.

7.2.8 Repeat steps 7.2.1 through 7.2.7 for each solution to be analyzed. The interval between sample injections must be adjusted so that all sample components traverse the analytical column before V2 is switched back to the 'B' position.

NOTE: Contamination by carryover can occur if the sample elution time is inadequate. Whenever an unusually concentrated sample is encountered, it should be followed by the analysis of a blank to check for cross contamination.

NOTE: Before running samples, or if the analysis is suspended for an extended period of time, flush the lines and condition the columns by analyzing a sufficient number of blanks to achieve an acceptable background.

7.3 Calibration: Analyze each of the six calibration standards and a calibration blank according to the procedure in Section 7.2. The analyte peaks in each chromatogram will appear in the following order: iron, copper, nickel, zinc, cobalt, cadmium, and manganese. For each analyte, calculate the least squares linear regression of peak height or area vs. the concentrations given in Table 3. If the correlation coefficient of the

regression for any analyte is less than 0.999, either the standards or blank were incorrectly prepared, or the chromatographic method is out of control. If this is the case, correct the problem and recalibrate.

7.4 Sample Analysis: Analyze the analytical samples and the necessary quality control samples (see Sections 8.0 - 8.6) according to the procedure in Section 7.2.

7.5 System shutdown: Shut down ion chromatograph.

7.5.1 **Clean eluant pump**: Disconnect eluant pump from V1. Pump water through each eluant line at 3 mL/min for 5 minutes.

7.5.2 **Clean post-column reactor**: Disconnect analytical column and post-column derivatization reagent line from post-column reactor. Drain PAR reagent from reactor. Connect eluant pump directly to reactor at both vacant inlets. Pump water from the eluant pump at 1.5 mL/min. for 15 minutes.

7.5.3 **Clean sample loop**: Switch V1 to the 'A' position. Pump 1% HNO_3 from both channels of the sample pump through the sample loop to waste for 5 minutes.

7.6 Calculation: Determine the peak height or area of each analyte in the sample. Using the slope and intercept determined for the linear regression in Section 7.3, calculate the concentration using the following equation.

$$\text{concentration } (\mu g/L) = \frac{\text{peak height (area) - intercept}}{\text{slope}}$$

8.0 QUALITY CONTROL

See Chapter One, Section 1.2 for general quality control requirements.

8.1 All quality control data should be maintained and available for easy reference or inspection.

8.2 Calibration curves must be composed of a minimum of a blank and four standards.

8.3 Samples more concentrated than the highest calibration standard must be diluted and re-analyzed.

8.4 A minimum of one reagent blank sample per sample batch should be analyzed to check for contamination. A reagent blank is reagent water treated according to the procedure in Sections 6.2 and 6.3 of this Method.

8.5 A minimum of one duplicate sample and one matrix spike sample per sample batch should be analyzed to check for duplicate precision and matrix-spike recovery.

8.6 A minimum of one initial calibration verification sample prepared from an independent source (EPA or NIST) should be analyzed per sample batch. If an EPA or NIST reference sample is not available, a mid-range standard, prepared from an independent commercial source, may be used.

9.0 METHOD PERFORMANCE

9.1 Method performance will be evaluated in single-laboratory and multi-laboratory evaluations by the EPA.
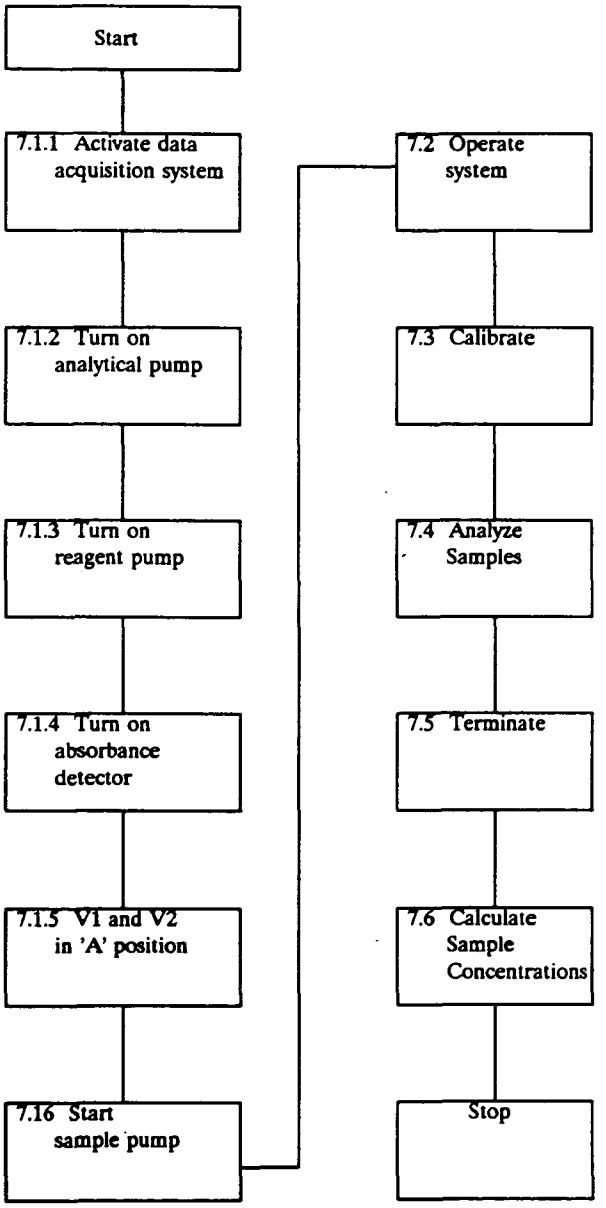
METHOD 6060
ION CHROMATOGRAPHY OF TRANSITION METALS